# 2014 SENTRA

## OWNER'S MANUAL

For your safety, read carefully and keep in this vehicle.

# Owner's Manual Supplement

The information contained within this supplement revises the following information in the 2014 Nissan Sentra Owner's Manual:

- DAYTIME RUNNING LIGHT SYSTEM (Canada only) in the "Instruments and controls" section of the Owner's Manual.

Read carefully and keep in vehicle

Printing: July 2014 (01)
Publication No. SU14E 3B17U0

## DAYTIME RUNNING LIGHT SYSTEM (Canada only)

The headlights automatically illuminate at 100% intensity (Low beam is used for the Daytime Running Light System) when the engine is started and the parking brake is released. The daytime running lights operate with the headlight switch in the OFF position. When the daytime running light system is active, the clearance lights, front side marker lights, tail lights and rear side marker lights are also On.

When you turn the headlight switch to the position for full illumination when driving at night you will not notice any difference in the Low Beam.

If the parking brake is applied before the engine is started, the daytime running lights do not illuminate. The daytime running lights illuminate when the parking brake is released. The daytime running lights remain on while the engine is running.

It is necessary at dusk to turn headlight switch ON for interior controls and switches to illuminate, as those remain OFF while switch is in the OFF position.

# FOREWORD

Welcome to the growing family of new NISSAN owners. This vehicle is delivered to you with confidence. It was produced using the latest techniques and strict quality control.

This manual was prepared to help you understand the operation and maintenance of your vehicle so that you may enjoy many miles (kilometers) of driving pleasure. Please read through this manual before operating your vehicle.

**A separate Warranty Information Booklet explains details about the warranties covering your vehicle. The "NISSAN Service and Maintenance Guide" explains details about maintaining and servicing your vehicle. Additionally, a separate Customer Care/Lemon Law Booklet (U.S. only) will explain how to resolve any concerns you may have with your vehicle, as well as clarify your rights under your state's lemon law.**

Your NISSAN dealership knows your vehicle best. When you require any service or have any questions, they will be glad to assist you with the extensive resources available to them.

In addition to factory-installed options, your vehicle may also be equipped with additional accessories installed by NISSAN or by your NISSAN dealer prior to delivery. It is important that you familiarize yourself with all disclosures, warnings, cautions and instructions concerning proper use of such accessories prior to operating the vehicle and/or accessory. See a NISSAN dealer for details concerning the particular accessories with which your vehicle is equipped.

# READ FIRST—THEN DRIVE SAFELY

Before driving your vehicle, please read this Owner's Manual carefully. This will ensure familiarity with controls and maintenance requirements assisting you in the safe operation of your vehicle.

**⚠ WARNING**

**IMPORTANT SAFETY INFORMATION REMINDERS FOR SAFETY!**

**Follow these important driving rules to help ensure a safe and comfortable trip for you and your passengers!**

- **NEVER drive under the influence of alcohol or drugs.**
- **ALWAYS observe posted speed limits and never drive too fast for conditions.**
- **ALWAYS give your full attention to driving and avoid using vehicle features or taking other actions that could distract you.**
- **ALWAYS use your seat belts and appropriate child restraint systems. Preteen children should be seated in the rear seat.**
- **ALWAYS provide information about the proper use of vehicle safety features to all occupants of the vehicle.**
- **ALWAYS review this Owner's Manual for important safety information.**

**MODIFICATION OF YOUR VEHICLE**

**This vehicle should not be modified. Modification could affect its performance, safety or durability, and may even violate governmental regulations. In addition, damage or performance problems resulting from modifications may not be covered under NISSAN warranties.**

This manual includes information for all features and equipment available on this model. Features and equipment in your vehicle may vary depending on model, trim level, options selected, order, date of production, region or availability. Therefore, you may find information about features or equipment that are not included or installed on your vehicle.

All information, specifications and illustrations in this manual are those in effect at the time of printing. NISSAN reserves the right to change specifications, performance, design or component suppliers without notice and without obligation. From time to time, NISSAN may update or revise this manual to provide Owners with the most accurate information currently available. Please carefully read and retain with this manual all revision updates sent to you by NISSAN to ensure you have access to accurate and up-to-date information regarding your vehicle. Current versions of vehicle Owner's Manuals and any updates can also be found in the Owner section of the NISSAN website at **https://owners.nissanusa.com/nowners/navigation/manualsGuide**. If you have questions concerning any information in your Owner's Manual, contact NISSAN Consumer Affairs. See the NISSAN CUSTOMER CARE PROGRAM page in this Owner's Manual for contact information.

## IMPORTANT INFORMATION ABOUT THIS MANUAL

You will see various symbols in this manual. They are used in the following ways:

**⚠ WARNING**

**This is used to indicate the presence of a hazard that could cause death or serious personal injury. To avoid or reduce the risk, the procedures must be followed precisely.**

**⚠ CAUTION**

**This is used to indicate the presence of a hazard that could cause minor or moderate personal injury or damage to your vehicle. To avoid or reduce the risk, the procedures must be followed carefully.**

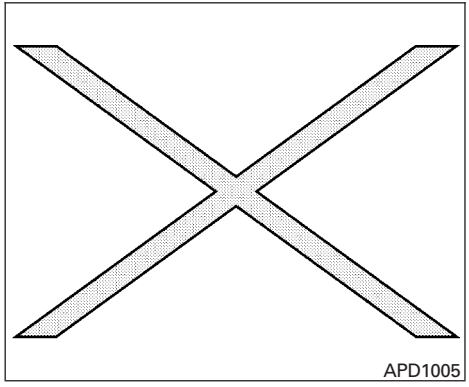


If you see this symbol, it means **“Do not do this”** or **“Do not let this happen.”**

If you see a symbol similar to these in an illustration, it means the arrow points to the front of the vehicle.

Arrows in an illustration that are similar to these indicate movement or action.

Arrows in an illustration that are similar to these call attention to an item in the illustration.

## CALIFORNIA PROPOSITION 65 WARNING

**⚠ WARNING**

**Engine exhaust, some of its constituents, and certain vehicle components contain or emit chemicals known to the State of California to cause cancer and birth defects or other reproductive harm. In addition, certain fluids contained in vehicles and certain products of component wear contain or emit chemicals known to the State of California to cause cancer and birth defects or other reproductive harm.**

## CALIFORNIA PERCHLORATE ADVISORY

**Some vehicle parts, such as lithium batteries, may contain perchlorate material. The following advisory is provided: “Perchlorate Material – special handling may apply, See www.dtsc.ca.gov/hazardouswaste/perchlorate/”.**

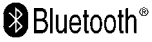


BLUETOOTH® is a trademark owned by Bluetooth SIG, Inc. and licensed to Visteon and Bosch.

SiriusXM® Satellite Radio requires subscription, sold separately. Not available in Alaska, Hawaii or Guam. For more information, visit www.siriusxm.com.

© Nissan Mexicana, S. A. de C. V.

All rights reserved. No part of this Owner’s Manual may be reproduced or stored in a retrieval system, or transmitted in any form, or by any means, electronic, mechanical, photocopying, recording or otherwise, without the prior written permission of Nissan Mexicana, S. A. de C. V.

# NISSAN CUSTOMER CARE PROGRAM

**NISSAN CARES . . .**

Both NISSAN and your NISSAN dealer are dedicated to serving all your automotive needs. Your satisfaction with your vehicle and your NISSAN dealer are our primary concerns. Your NISSAN dealer is always available to assist you with all your automobile sales and service needs.

However, if there is something that your NISSAN dealer cannot assist you with or you would like to provide NISSAN directly with comments or questions, please contact the NISSAN Consumer Affairs Department using our toll-free number:

**For U.S. customers**
**1-800-NISSAN-1**
**(1-800-647-7261)**

**For Canadian customers**
**1-800-387-0122**

The Consumer Affairs Department will ask for the following information:

- Your name, address, and telephone number
- Vehicle identification number (attached to the top of the instrument panel on the driver's side)
- Date of purchase
- Current odometer reading
- Your NISSAN dealer's name
- Your comments or questions

OR

You can write to NISSAN with the information at:

**For U.S. customers**
**Nissan North America, Inc.**
**Consumer Affairs Department**
**P.O. Box 685003**
**Franklin, TN 37068-5003**
**or via e-mail at:**
**nnaconsumeraffairs@nissan-usa.com**

**For Canadian customers**
**Nissan Canada Inc.**
**5290 Orbitor Drive**
**Mississauga, Ontario L4W 4Z5**
**or via e-mail at:**
**information.centre@nissancanada.com**

If you prefer, visit us at:
**www.nissanusa.com** (for U.S. customers) or
**www.nissan.ca** (for Canadian customers)

We appreciate your interest in NISSAN and thank you for buying a quality NISSAN vehicle.

# Table of Contents


| | |
|---|---|
| Illustrated table of contents | 0 |
| Safety—Seats, seat belts and supplemental restraint system | 1 |
| Instruments and controls | 2 |
| Pre-driving checks and adjustments | 3 |
| Monitor, climate, audio, phone and voice recognition systems | 4 |
| Starting and driving | 5 |
| In case of emergency | 6 |
| Appearance and care | 7 |
| Maintenance and do-it-yourself | 8 |
| Technical and consumer information | 9 |
| Index | 10 |

# 0 Illustrated table of contents

Air bags, seat belts and child restraints . . . . . 0-2
Exterior front . . . . . 0-3
Exterior rear. . . . . 0-4
Passenger compartment . . . . . 0-5
Instrument panel. . . . . 0-6
Engine compartment check locations . . . . . 0-7
Warning/indicator lights . . . . . 0-8

## AIR BAGS, SEAT BELTS AND CHILD RESTRAINTS

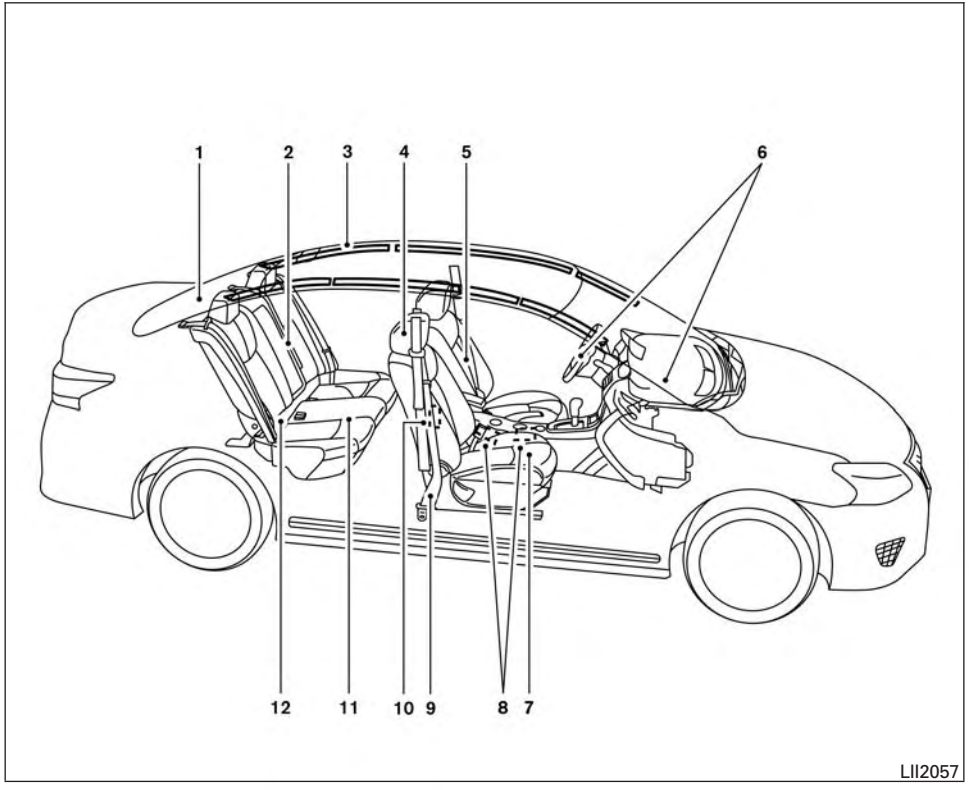


1. Top tether anchor (P. 1-32)
2. Rear seat belts (P. 1-9)
3. Roof-mounted curtain side-impact supplemental air bag (P. 1-36)
4. Head restraints/headrests (P. 1-2)
5. Front seat belts (P. 1-9)
6. Supplemental front-impact air bags (P. 1-36)
7. Front seats (P. 1-2)
8. Occupant classification sensor (weight sensor) (P. 1-44)
9. Seat belt with pretensioner (P. 1-36)
10. Front seat-mounted side-impact supplemental air bag (P. 1-36)
11. Rear seats (P. 1-4)
12. LATCH (Lower Anchors and Tethers for CHildren) system (P. 1-20)

**See the page number indicated in parentheses for operating details.**

## EXTERIOR FRONT

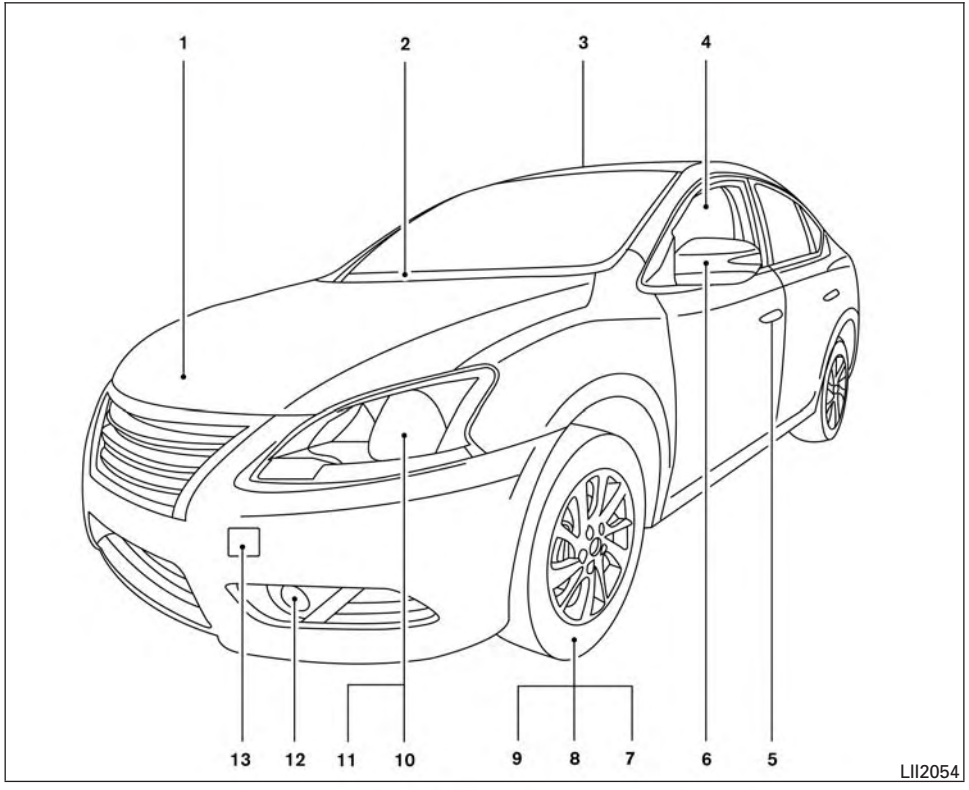


1. Engine hood (P. 3-23)
2. Windshield wiper and washer switch, Windshield (P. 2-24, 8-18)
3. Moonroof (if so equipped) (P. 2-42)
4. Power windows (P. 2-39)
5. Door locks, keyfob, keys, NISSAN Intelligent Key® (if so equipped) (P. 3-4, 3-7, 3-2, 3-10)
6. Mirrors (P. 3-29)
7. Tire pressure (P. 8-32)
8. Flat tire (P. 6-3)
9. Tire chains (P. 8-39)
10. Replacing bulbs (P. 8-28)
11. Headlight and turn signal switch, LED headlight accents (P. 2-26)
12. Fog light switch (if so equipped) (P. 2-26)
13. Tie down hook (if so equipped) (P. 6-14)

**See the page number indicated in parentheses for operating details.**

## EXTERIOR REAR

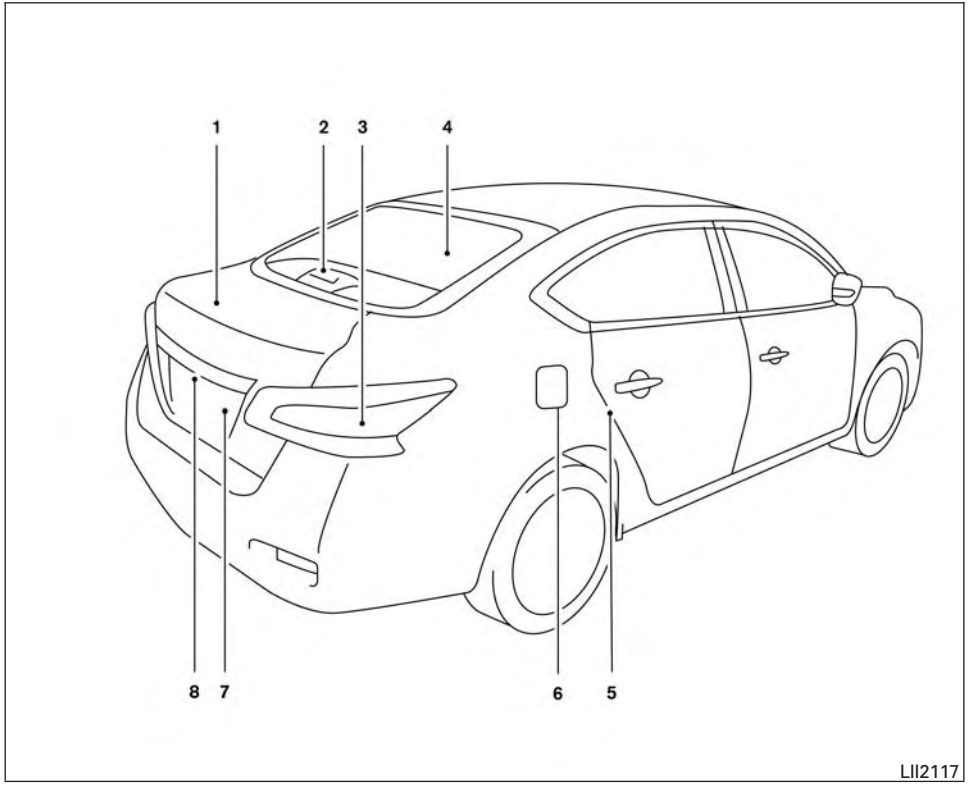


1. Trunk lid (P. 3-24)
2. High mount stop light (P. 8-28)
3. Replacing bulbs (P. 8-28)
4. Rear window defroster switch (P. 2-25)
5. Child safety rear door lock (P. 3-6)
6. Fuel-filler door (P. 3-25), Fuel-filler cap, fuel recommendation (P. 3-25, P. 9-4)
7. Rearview camera (if so equipped) (P. 4-10)
8. Exterior trunk lid release (P. 3-16), Interior trunk lid release (if so equipped) (P. 3-24)

**See the page number indicated in parentheses for operating details.**

## PASSENGER COMPARTMENT

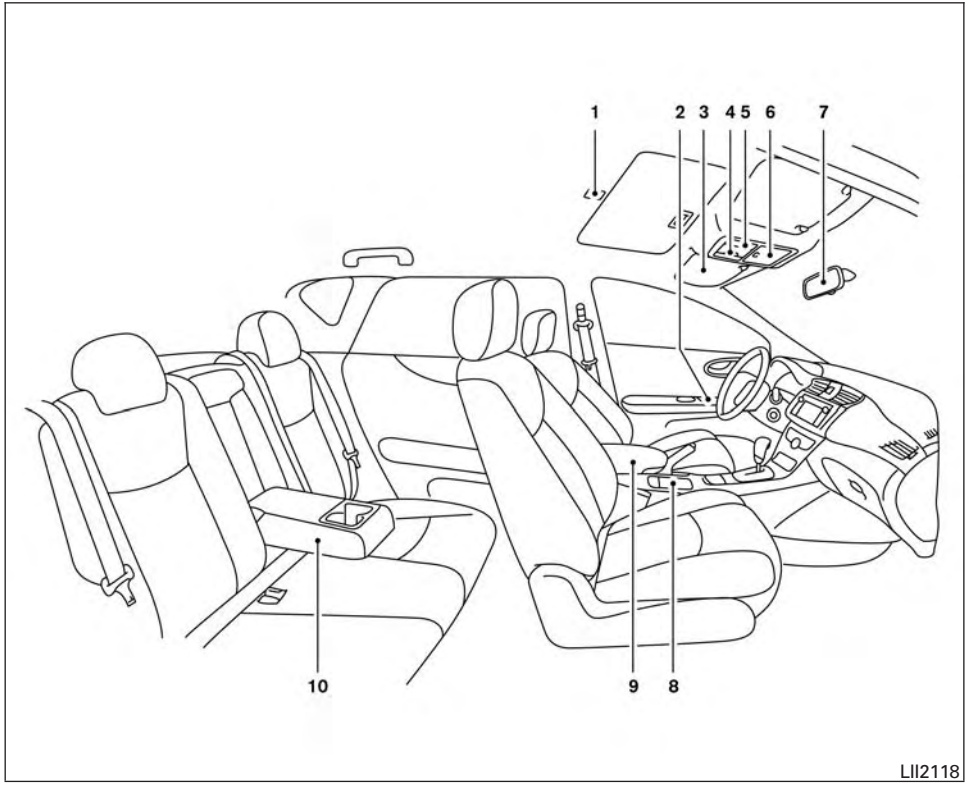


1. Interior lights (if so equipped) (P. 2-44)
2. Power window switch, Power door lock switch (P. 2-39, 3-6)
3. Sun visors (P. 3-28)
4. Moonroof switch (if so equipped) (P. 2-42)
5. Map lights (P. 2-46)
6. Sunglasses holder (P. 2-35)
7. Rearview mirror (P. 3-29)
8. Front cup holders (P. 2-36)
9. Console box (P. 2-37)
10. Rear armrest, cup holders (P. 1-4, P 2-36)

## INSTRUMENT PANEL

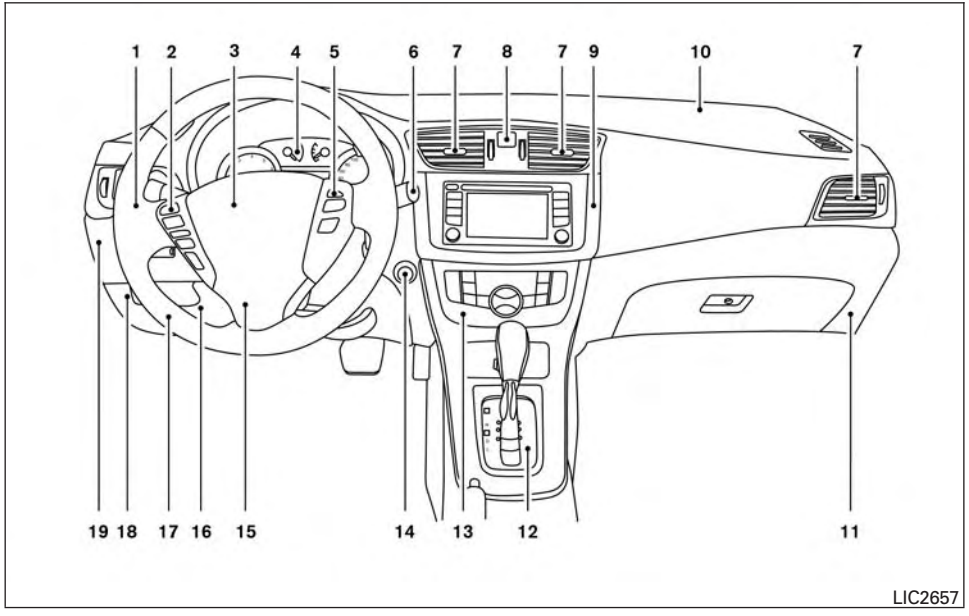


1. Headlight/fog light (if so equipped)/turn signal switch (P. 2-26)
2. Steering wheel switch for trip computer, audio control and Bluetooth® Hands-Free Phone System (if so equipped) (P. 2-7, 4-65)
3. Driver's supplemental air bag/Horn (P. 1-44, 2-30)
4. Meters and gauges (P. 2-3)
5. Cruise control main/set switches (if so equipped) (P. 5-24)
6. Windshield wiper/washer switch (P. 2-24)
7. Ventilator (P. 4-16)
8. Hazard warning flasher switch (P. 6-2)
9. Audio system (P. 4-27)
10. Passenger's supplemental air bag (P. 1-44)
11. Glove box (P. 2-37)
12. Shift lever (P. 5-17)
13. Climate control (P. 4-16, 4-24)
14. Ignition switch (if so equipped) (P. 5-8, 5-10)
15. Telescopic steering (P.3-27)
16. Hood release (P. 3-23)
17. Fuel filler door release (P. 3-25)
18. ECO mode switch (P. 5-22); SPORT mode switch (P.5-22); Vehicle Dynamic Control (VDC) OFF switch (P.2-31)
19. Instrument brightness control (P. 2-29); Power mirror switch (P.3-30); Trunk release (P.3-24)

* Refer to the separate Navigation System Owner's Manual (if so equipped).

**See the page number indicated in parentheses for operating details.**

## ENGINE COMPARTMENT CHECK LOCATIONS

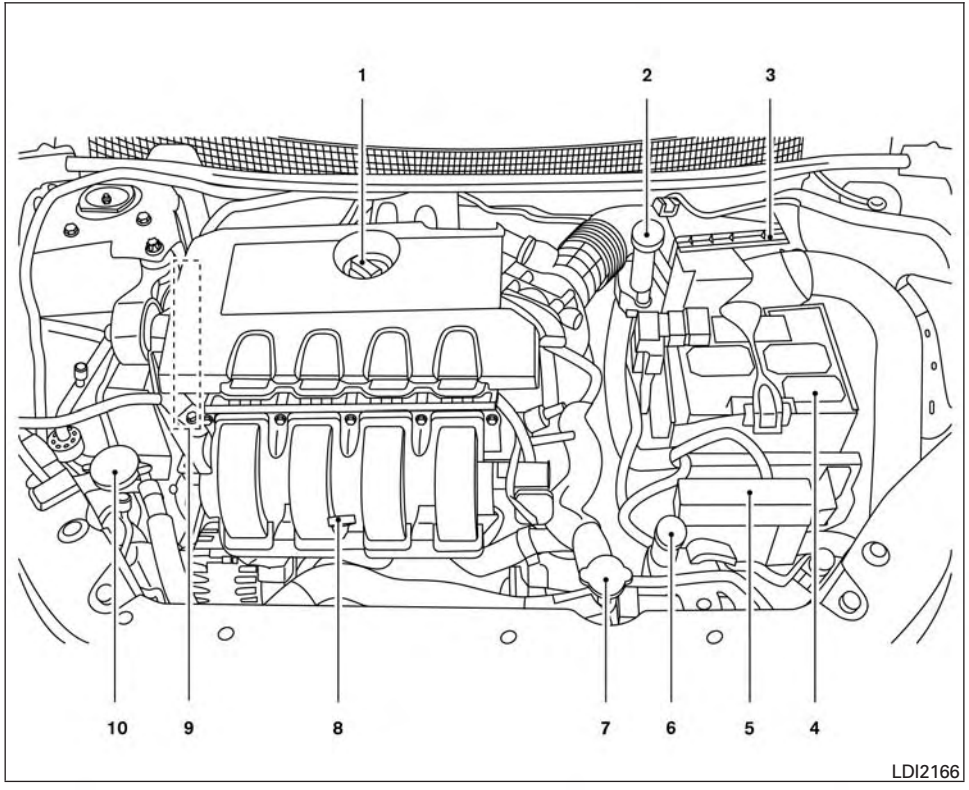


**MRA8DE engine**

1. Engine oil filler cap (P. 8-9)
2. Brake and clutch (if so equipped) fluid reservoir (P. 8-12)
3. Air cleaner (P. 8-17)
4. Battery (P. 8-13)
5. Fuse/fusible link box (P. 8-21)
6. Engine coolant reservoir (P. 8-7)
7. Radiator cap (P. 8-7)
8. Engine oil dipstick (P. 8-9)
9. Drive belt location (P. 8-16)
10. Windshield-washer fluid reservoir (P. 8-12)

## WARNING/INDICATOR LIGHTS

| Warning light | Name | Page |
|---|---|---|
| ABS or | Anti-lock Braking System (ABS) warning light | 2-13 |
| BRAKE or | Brake warning light | 2-13 |
| | Charge warning light | 2-14 |
| | Door open warning light | 2-14 |
| | Engine oil pressure warning light | 2-14 |
| | Low fuel warning light | 2-14 |

| Warning light | Name | Page |
|---|---|---|
| | Low tire pressure warning light | 2-14 |
| | Low windshield-washer fluid warning light | 2-16 |
| | NISSAN Intelligent Key® lock warning light (M/T models) (if so equipped) | 2-16 |
| KEY | NISSAN Intelligent Key® warning light (if so equipped) | 2-16 |
| P SHIFT | P position selecting warning light (CVT models) (if so equipped) | 2-17 |
| PS | Power steering warning light | 2-16 |

| Warning light | Name | Page |
|---|---|---|
| | Seat belt warning light | 2-17 |
| | Supplemental air bag warning light | 2-17 |

| Indicator light | Name | Page |
|---|---|---|
| P | Continuously Variable Transmission (CVT) position indicator light (CVT models) | 2-17 |
| CRUISE | Cruise main switch indicator light (if so equipped) | 2-18 |
| ECO | ECO mode indicator light | 2-18 |
| | Engine start operation indicator light (if so equipped) | 2-18 |

| Indicator light | Name | Page |
|---|---|---|
| | Front fog light indicator light (if so equipped) | 2-18 |
| | Front passenger air bag status light | 2-18 |
| | High beam indicator light (blue) | 2-18 |
| | Malfunction Indicator Light (MIL) | 2-18 |
| O/D OFF | Overdrive off indicator light (CVT models) | 2-19 |
| | Security indicator light | 2-19 |
| | Side light and headlight indicator light (green) | 2-19 |

| Indicator light | Name | Page |
|---|---|---|
| | Slip indicator light | 2-19 |
| SPORT | SPORT mode indicator light | 2-20 |
| | Turn signal/hazard indicator lights | 2-20 |
| OFF | Vehicle Dynamic Control (VDC) off indicator light | 2-20 |

## MEMO

# 1 Safety—Seats, seat belts and supplemental restraint system


Seats . . . . . 1-2
Front manual seat adjustment . . . . . 1-2
Folding rear seat . . . . . 1-4
Head restraints/Headrests. . . . . 1-5
Seat belts . . . . . 1-9
Precautions on seat belt usage. . . . . 1-9
Pregnant women . . . . . 1-12
Injured persons. . . . . 1-12
Three-point type seat belt with retractor . . . . . 1-12
Seat belt extenders . . . . . 1-15
Seat belt maintenance . . . . . 1-15
Child safety . . . . . 1-16
Infants. . . . . 1-17
Small children . . . . . 1-17
Larger children . . . . . 1-17
Child restraints . . . . . 1-18
Precautions on child restraints . . . . . 1-18
LATCH (Lower Anchors and Tethers for CHildren) System . . . . . 1-20
Rear-facing child restraint installation using LATCH . . . . . 1-22
Rear-facing child restraint installation using the seat belts . . . . . 1-24
Forward-facing child restraint installation using LATCH. . . . . 1-27
Forward-facing child restraint installation using the seat belts . . . . . 1-29
Installing top tether strap . . . . . 1-32
Booster seats . . . . . 1-33
Supplemental restraint system . . . . . 1-36
Precautions on supplemental restraint system . . . . . 1-36
Supplemental air bag warning labels. . . . . 1-51
Supplemental air bag warning light . . . . . 1-51

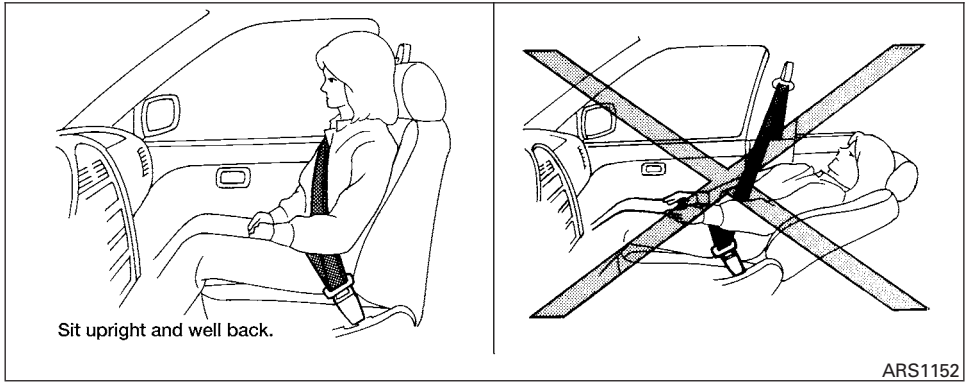


**⚠ WARNING**

- **Do not ride in a moving vehicle when the seatback is reclined. This can be dangerous. The shoulder belt will not be against your body. In an accident, you could be thrown into it and receive neck or other serious injuries. You could also slide under the lap belt and receive serious internal injuries.**
- **For the most effective protection when the vehicle is in motion, the seat should be upright. Always sit well back in the seat with both feet on the floor and adjust the seat properly. See "Precautions on seat belt usage" in this section.**
- **After adjustment, gently rock in the seat to make sure it is securely locked.**
- **Do not leave children unattended inside the vehicle. They could unknowingly activate switches or controls. Unattended children could become involved in serious accidents.**
- **Do not adjust the driver's seat while driving so full attention may be given to vehicle operation. The seat may move suddenly and could cause loss of control of the vehicle.**
- **The seatback should not be reclined any more than needed for comfort. Seat belts are most effective when the passenger sits well back and straight up in the seat. If the seatback is reclined, the risk of sliding under the lap belt and being injured is increased.**

**⚠ CAUTION**

**When adjusting the seat positions, be sure not to contact any moving parts to avoid possible injuries and/or damage.**

## FRONT MANUAL SEAT ADJUSTMENT

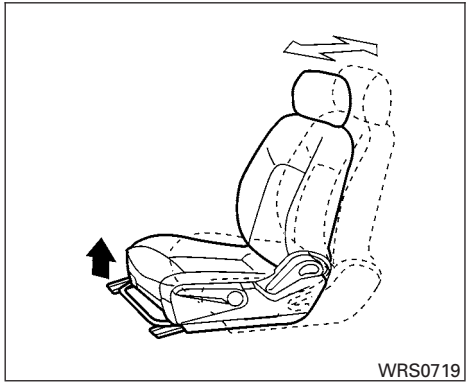


## Forward and backward

Pull the center of the bar up and hold it while you slide the seat forward or backward to the desired position. Release the bar to lock the seat in position.

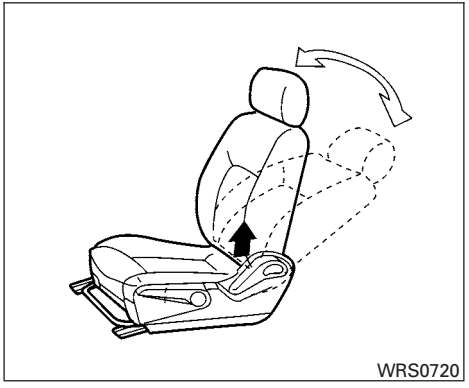


## Reclining

To recline the seatback, pull the lever up and lean back. To bring the seatback forward, pull the lever up and lean your body forward. Release the lever to lock the seatback in position.

The reclining feature allows adjustment of the seatback for occupants of different sizes for added comfort and to help obtain proper seat belt fit. See “Precautions on seat belt usage” in this section. Also, the seatback can be reclined to allow occupants to rest when the vehicle is stopped and the shift lever (CVT) is in P (Park) or the manual shift lever is in N (Neutral) with the parking brake applied.

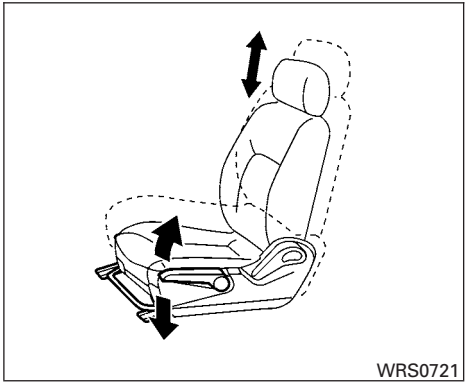


## Seat lifter (driver’s seat)

Pull up or push down the adjusting lever to adjust the seat height until the desired position is achieved.

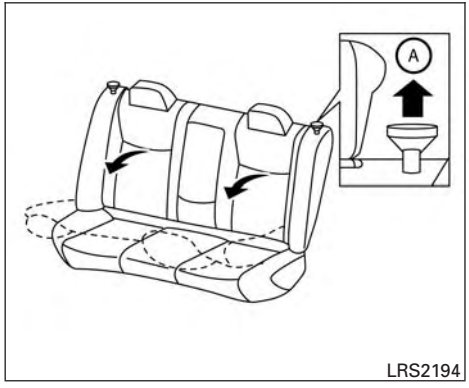


## FOLDING REAR SEAT

Pull the knob Ⓐ to fold each seatback down.

**⚠WARNING**

- **Never allow anyone to ride in the cargo area or on the rear seat when it is in the fold-down position. Use of these areas by passengers without proper restraints could result in serious injury in an accident or sudden stop.**
- **Properly secure all cargo with ropes or straps to help prevent it from sliding or shifting. Do not place cargo higher than the seatbacks. In a sudden stop or collision, unsecured cargo could cause personal injury.**
- **When returning the seatbacks to the upright position, be certain they are completely secured in the latched position. If they are not completely secured, passengers may be injured in an accident or sudden stop.**
- **Closely supervise children when they are around cars to prevent them from playing and becoming locked in the trunk where they could be seriously injured. Keep the car locked, with the rear seatback and trunk lid securely latched when not in use, and prevent children's access to car keys.**

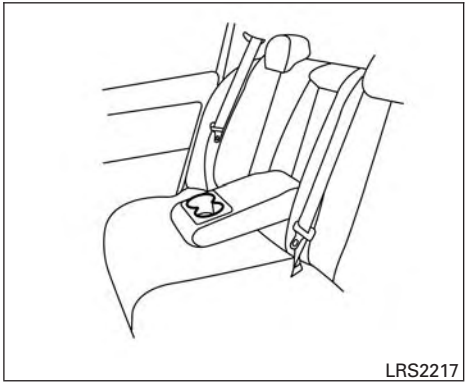


## Center armrest

Pull the armrest down until it rests on the seat cushion.

## HEAD RESTRAINTS/HEADRESTS

**⚠ WARNING**

**Head restraints/headrests supplement the other vehicle safety systems. They may provide additional protection against injury in certain rear end collisions. Adjustable head restraints/headrests must be adjusted properly, as specified in this section. Check the adjustment after someone else uses the seat. Do not attach anything to the head restraint/headrest stalks or remove the head restraint/headrest. Do not use the seat if the head restraint/headrest has been removed. If the head restraint/headrest was removed, reinstall and properly adjust the head restraint/headrest before an occupant uses the seating position. Failure to follow these instructions can reduce the effectiveness of the head restraints/headrests. This may increase the risk of serious injury or death in a collision.**

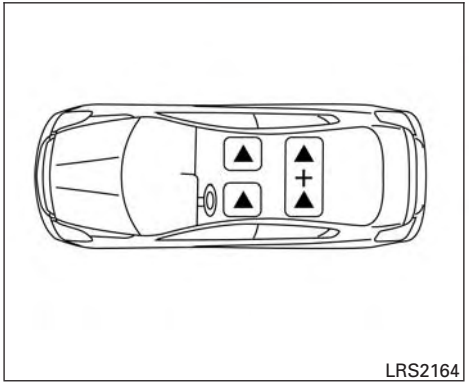


The illustration shows the seating positions equipped with head restraints/headrests.

▲ Indicates the seating position is equipped with a head restraint.

■ Indicates the seating position is equipped with a headrest.

+ Indicates the seating position is not equipped with a head restraint or headrest (if applicable).

- Your vehicle is equipped with a head restraint/headrest that may be integrated, adjustable or non-adjustable.
- Adjustable head restraints/headrests have multiple notches along the stalks to lock them in a desired adjustment position.
- The non-adjustable head restraints/headrests have a single locking notch to secure them to the seat frame.
- Proper Adjustment:
  - For the adjustable type, align the head restraint/headrest so the center of your ear is approximately level with the center of the head restraint/headrest.
  - If your ear position is still higher than the recommended alignment, place the head restraint/headrest at the highest position.
- If the head restraint/headrest has been removed, ensure that it is reinstalled and locked in place before riding in that designated seating position.

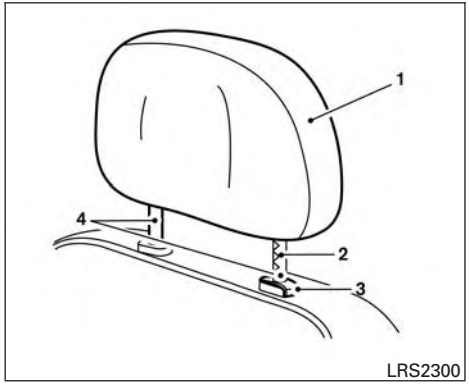


## Adjustable head restraint/headrest components

1. Removable head restraint/headrest
2. Multiple notches
3. Lock knob
4. Stalks

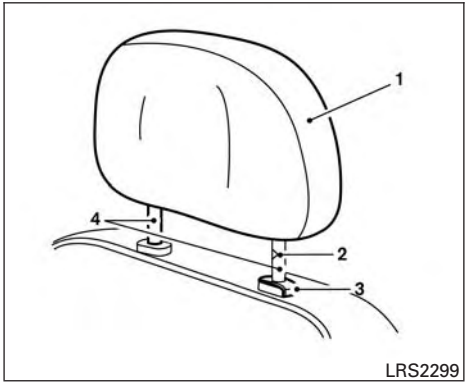


## Non-adjustable head restraint/ headrest components

1. Removable head restraint/headrest
2. Single Notch
3. Lock knob
4. Stalks

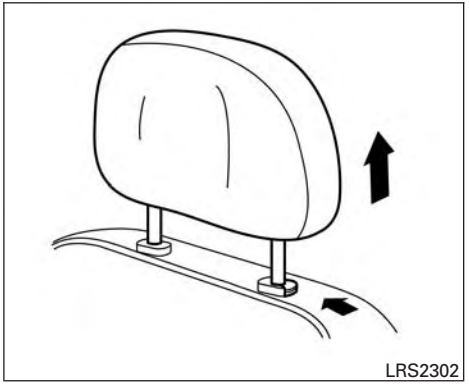


## Remove

Use the following procedure to remove the head restraint/headrest.

1. Pull the head restraint/headrest up to the highest position.
2. Push and hold the lock knob.
3. Remove the head restraint/headrest from the seat.
4. Store the head restraint/headrest properly in a secure place so it is not loose in the vehicle.

5. Reinstall and properly adjust the head restraint/headrest before an occupant uses the seating position.

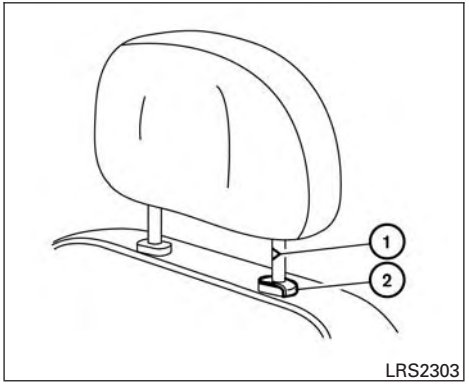


## Install

1. Align the head restraint/headrest stalks with the holes in the seat. Make sure the head restraint/headrest is facing the correct direction. The stalk with the notch (notches) ① must be installed in the hole with the lock knob ②.
2. Push and hold the lock knob and push the head restraint/headrest down.
3. Properly adjust the head restraint/headrest before an occupant uses the seating position.

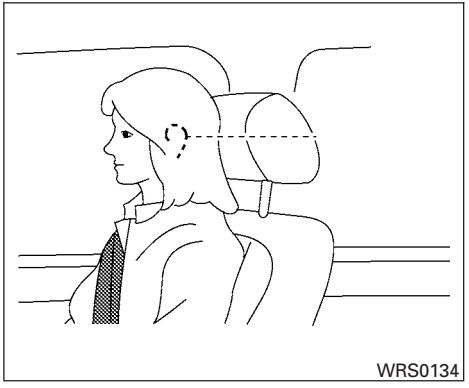


## Adjust

For adjustable head restraint/headrest

Adjust the head restraint/headrest so the center is level with the center of your ears. If your ear position is still higher than the recommended alignment, place the head restraint/headrest at the highest position.

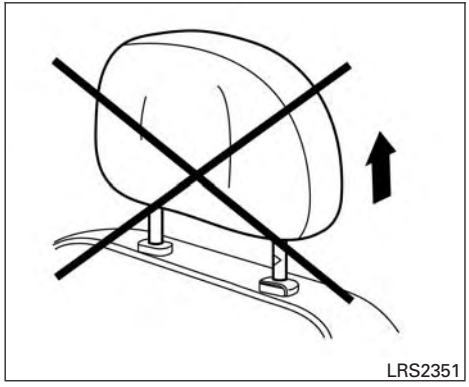


## For non-adjustable head restraint/ headrest

Make sure the head restraint/headrest is positioned so the lock knob is engaged in the notch before riding in that designated seating position.

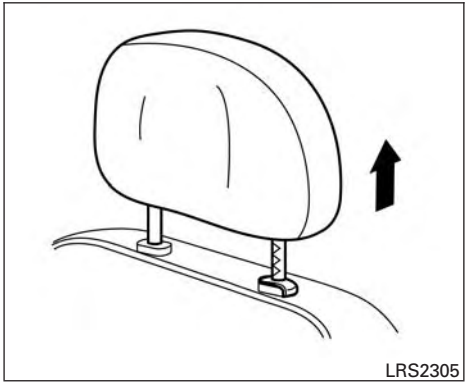


## Raise

To raise the head restraint/headrest, pull it up.

Make sure the head restraint/headrest is positioned so the lock knob is engaged in the notch before riding in that designated seating position.

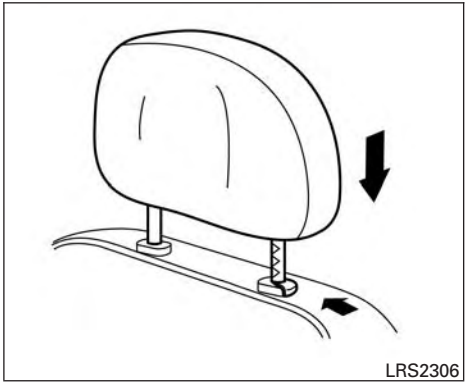


## Lower

To lower, push and hold the lock knob and push the head restraint/headrest down.

Make sure the head restraint/headrest is positioned so the lock knob is engaged in the notch before riding in that designated seating position.

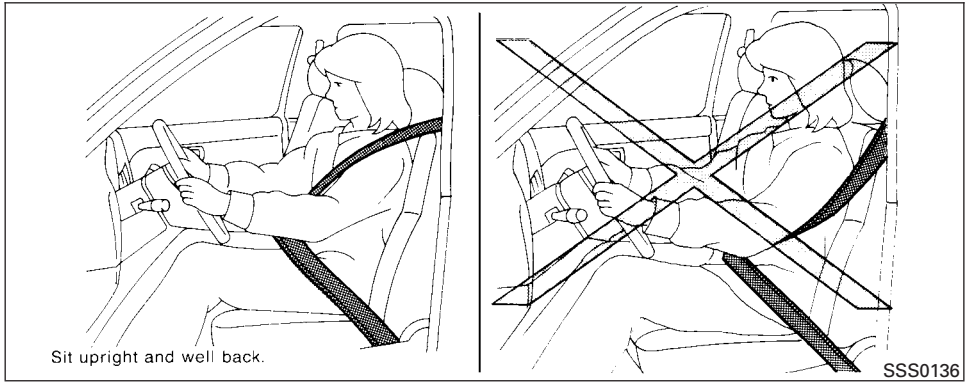


## PRECAUTIONS ON SEAT BELT USAGE

If you are wearing your seat belt properly adjusted and you are sitting upright and well back in your seat with both feet on the floor, your chances of being injured or killed in an accident and/or the severity of injury may be greatly reduced. NISSAN strongly encourages you and all of your passengers to buckle up every time you drive, even if your seating position includes a supplemental air bag.

**Most U.S. states and Canadian provinces or territories specify that seat belts be worn at all times when a vehicle is being driven.**

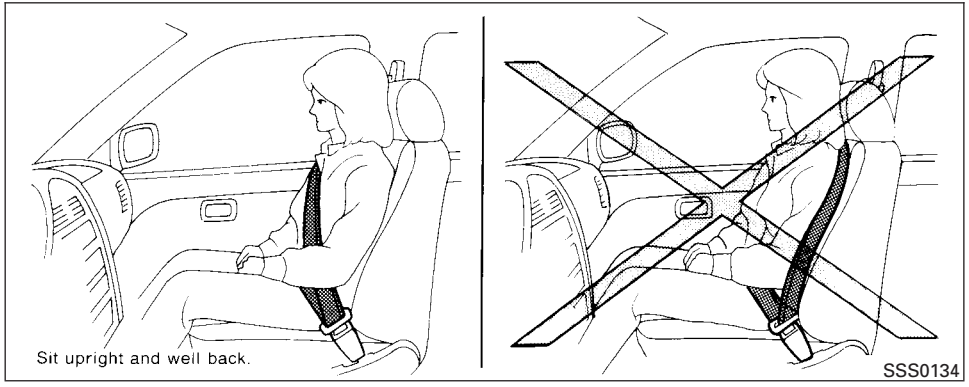


**⚠ WARNING**

- **Every person who drives or rides in this vehicle should use a seat belt at all times. Children should be properly restrained in the rear seat and, if appropriate, in a child restraint.**

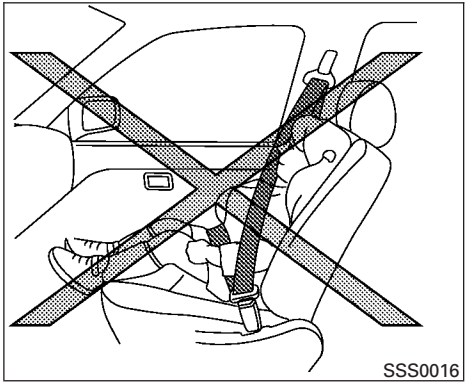


**⚠ WARNING**

- **The seat belt should be properly adjusted to a snug fit. Failure to do so may reduce the effectiveness of the entire restraint system and increase the chance or severity of injury in an accident. Serious injury or death can occur if the seat belt is not worn properly.**

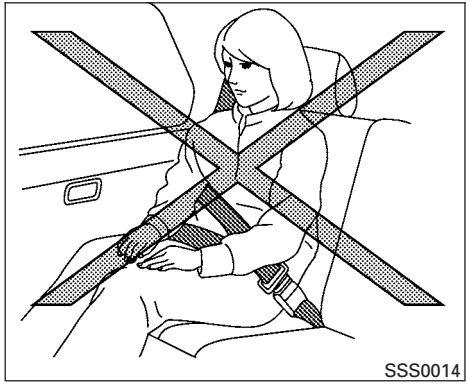


**⚠ WARNING**

- **Always route the shoulder belt over your shoulder and across your chest. Never put the belt behind your back, under your arm or across your neck. The belt should be away from your face and neck, but not falling off your shoulder.**
- **Position the lap belt as low and snug as possible AROUND THE HIPS, NOT THE WAIST. A lap belt worn too high could increase the risk of internal injuries in an accident.**
- **Be sure the seat belt tongue is securely fastened to the proper buckle.**
- **Do not wear the seat belt inside out or twisted. Doing so may reduce its effectiveness.**
- **Do not allow more than one person to use the same seat belt.**
- **Never carry more people in the vehicle than there are seat belts.**
- **If the seat belt warning light glows continuously while the ignition is turned ON with all doors closed and all seat belts fastened, it may indicate a malfunction in the system. Have the system checked by a NISSAN dealer.**
- **No changes should be made to the seat belt system. For example, do not modify the seat belt, add material, or install devices that may change the seat belt routing or tension. Doing so may affect the operation of the seat belt system. Modifying or tampering with the seat belt system may result in serious personal injury.**
- **Once a seat belt pretensioner has activated, it cannot be reused and must be replaced together with the retractor. See your NISSAN dealer.**
- **Removal and installation of pretensioner system components should be done by a NISSAN dealer.**
- **All seat belt assemblies, including retractors and attaching hardware, should be inspected after any collision by a NISSAN dealer. NISSAN recommends that all seat belt assemblies in use during a collision be replaced unless the collision was minor and the belts show no damage and continue to operate properly. Seat belt assemblies not in use during a collision should also be inspected and replaced if either damage or improper operation is noted.**
- **All child restraints and attaching hardware should be inspected after any collision. Always follow the restraint manufacturer's inspection instructions and replacement recommendations. The child restraints should be replaced if they are damaged.**

## PREGNANT WOMEN

NISSAN recommends that pregnant women use seat belts. The seat belt should be worn snug and always position the lap belt as low as possible around the hips, not the waist. Place the shoulder belt over your shoulder and across your chest. Never run the lap/shoulder belt over your abdominal area. Contact your doctor for specific recommendations.

## INJURED PERSONS

NISSAN recommends that injured persons use seat belts. Check with your doctor for specific recommendations.

## THREE-POINT TYPE SEAT BELT WITH RETRACTOR

**⚠ WARNING**

- **Every person who drives or rides in this vehicle should use a seat belt at all times.**
- **Do not ride in a moving vehicle when the seatback is reclined. This can be dangerous. The shoulder belt will not be against your body. In an accident, you could be thrown into it and receive neck or other serious injuries. You could also slide under the lap belt and receive serious internal injuries.**
- **For the most effective protection when the vehicle is in motion, the seat should be upright. Always sit well back in the seat with both feet on the floor and adjust the seat belt properly.**
- **Do not allow children to play with the seat belts. Most seating positions are equipped with Automatic Locking Retractor (ALR) mode seat belts. If the seat belt becomes wrapped around a child's neck with the ALR mode activated, the child can be seriously injured or killed if the seat belt retracts and becomes tight. This can occur even if the vehicle is parked. Unbuckle the seat belt to release the child. If the seat belt cannot be unbuckled or is already unbuckled, release the child by cutting the seat belt with a suitable tool (such as a knife or scissors) to release the seat belt.**

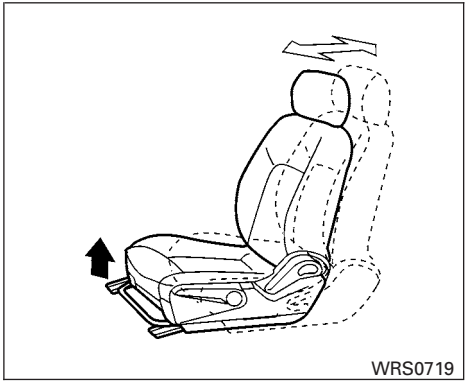


**Manual front seat shown**

### Fastening the seat belts

1. Adjust the seat. See "Seats" in this section.

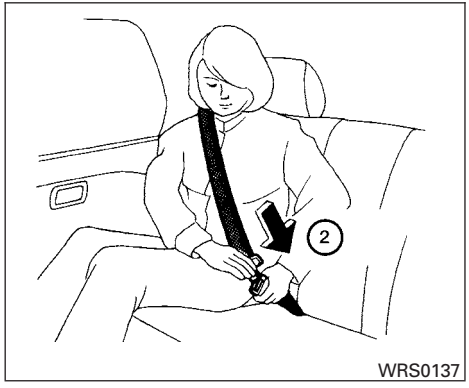


② Slowly pull the seat belt out of the retractor and insert the tongue into the buckle until you hear and feel the latch engage.

- **The retractor is designed to lock during a sudden stop or on impact. A slow pulling motion permits the seat belt to move, and allows you some freedom of movement in the seat.**
- **If the seat belt cannot be pulled from its fully retracted position, firmly pull the belt and release it. Then smoothly pull the belt out of the retractor.**

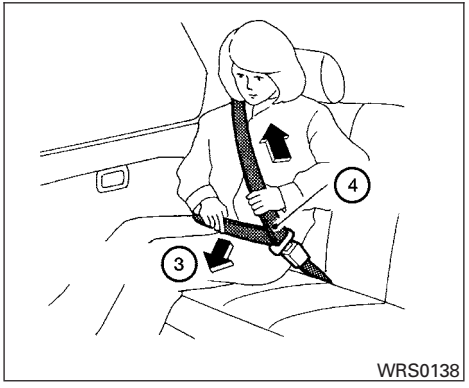


③ Position the lap belt portion **low and snug on the hips** as shown.

④ Pull the shoulder belt portion toward the retractor to take up extra slack. Be sure the shoulder belt is routed over your shoulder and across your chest.

The front passenger seat and the rear seating positions three-point seat belts have two modes of operation:

- Emergency Locking Retractor (ELR)
- Automatic Locking Retractor (ALR)

The Emergency Locking Retractor (ELR) mode allows the seat belt to extend and retract to allow the driver and passengers some freedom of movement in the seat. The ELR locks the seat belt when the vehicle slows down rapidly or during certain impacts.

The Automatic Locking Retractor (ALR) mode (child restraint mode) locks the seat belt for child restraint installation.

When the ALR mode is activated, the seat belt cannot be extended again until the seat belt tongue is detached from the buckle and fully retracted. The seat belt returns to the ELR mode after the seat belt fully retracts. See “Child restraints” in this section for more information.

**The ALR mode should be used only for child restraint installation. During normal seat belt use by an occupant, the ALR mode should not be activated. If it is activated, it may cause uncomfortable seat belt tension. It can also change the operation of the front passenger air bag. See “Supplemental air bag warning light” in this section.**

**⚠ WARNING**

**When fastening the seat belts, be certain that the seatbacks are completely secured in the latched position. If they are not completely secured, passengers may be injured in an accident or sudden stop.**

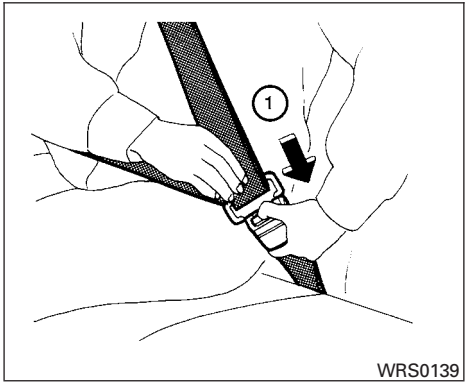


## Unfastening the seat belts

① To unfasten the seat belt, press the button on the buckle. The seat belt automatically retracts.

## Checking seat belt operation

Seat belt retractors are designed to lock seat belt movement by two separate methods:

- When the seat belt is pulled quickly from the retractor.
- When the vehicle slows down rapidly.

To increase your confidence in the seat belts, check the operation as follows:

- Grasp the shoulder belt and pull forward quickly. The retractor should lock and restrict further belt movement.

If the retractor does not lock during this check or if you have any questions about seat belt operation, see a NISSAN dealer.

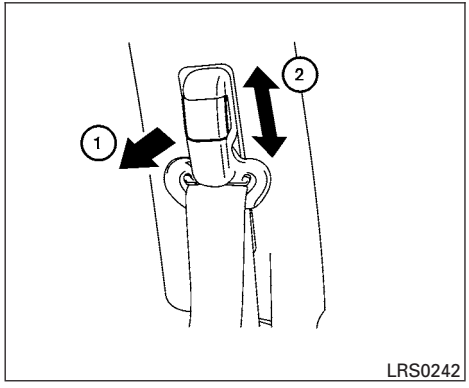


## Shoulder belt height adjustment (front seats)

The shoulder belt anchor height should be adjusted to the position best for you. See “Precautions on seat belt usage” in this section. To adjust, pull out the adjustment button ① and move the shoulder belt anchor to the desired position ②, so the belt passes over the center of the shoulder. The belt should be away from your face and neck, but not falling off your shoulder. Release the adjustment button to lock the shoulder belt anchor into position.

**⚠ WARNING**

- **After adjustment, release the adjustment button and try to move the shoulder belt anchor up and down to make sure it is securely fixed in position.**
- **The shoulder belt anchor height should be adjusted to the position best for you. Failure to do so may reduce the effectiveness of the entire restraint system and increase the chance or severity of injury in an accident.**

## SEAT BELT EXTENDERS

If, because of body size or driving position, it is not possible to properly fit the lap/shoulder belt and fasten it, an extender that is compatible with the installed seat belts is available that can be purchased. The extender adds approximately 8 in (200 mm) of length and may be used for either the driver or front passenger seating position. See a NISSAN dealer for assistance with purchasing an extender if an extender is required.

**⚠ WARNING**

- **Only NISSAN seat belt extenders, made by the same company which made the original equipment seat belts, should be used with NISSAN seat belts.**
- **Adults and children who can use the standard seat belt should not use an extender. Such unnecessary use could result in serious personal injury in the event of an accident.**
- **Never use seat belt extenders to install child restraints. If the child restraint is not secured properly, the child could be seriously injured in a collision or a sudden stop.**

## SEAT BELT MAINTENANCE

- **To clean the seat belt webbing,** apply a mild soap solution or any solution recommended for cleaning upholstery or carpet. Then wipe with a cloth and allow the seat belts to dry in the shade. Do not allow the seat belts to retract until they are completely dry.
- **If dirt builds up in the shoulder belt guide of the seat belt anchors,** the seat belts may retract slowly. Wipe the shoulder belt guide with a clean, dry cloth.

- **Periodically check to see that the seat belt and the metal components,** such as buckles, tongues, retractors, flexible wires and anchors, work properly. If loose parts, deterioration, cuts or other damage on the webbing is found, the entire seat belt assembly should be replaced.

**⚠ WARNING**

**Do not allow children to play with the seat belts. Most seating positions are equipped with Automatic Locking Retractor (ALR) mode seat belts. If the seat belt becomes wrapped around a child's neck with the ALR mode activated, the child can be seriously injured or killed if the seat belt retracts and becomes tight. This can occur even if the vehicle is parked. Unbuckle the seat belt to release the child. If the seat belt cannot be unbuckled or is already unbuckled, release the child by cutting the seat belt with a suitable tool (such as a knife or scissors) to release the seat belt.**

**Children need adults to help protect them. They need to be properly restrained.**

In addition to the general information in this manual, child safety information is available from many other sources, including doctors, teachers, government traffic safety offices, and community organizations. Every child is different, so be sure to learn the best way to transport your child.

There are three basic types of child restraint systems:

- Rear-facing child restraint
- Forward-facing child restraint
- Booster seat

The proper restraint depends on the child's size. Generally, infants up to about 1 year and less than 20 lbs (9 kg) should be placed in rear-facing child restraints. Forward-facing child restraints are available for children who outgrow rear-facing child restraints and are at least 1 year old. Booster seats are used to help position a vehicle lap/shoulder belt on a child who can no longer use a forward-facing child restraint.

**⚠ WARNING**

**Infants and children need special protection. The vehicle's seat belts may not fit them properly. The shoulder belt may come too close to the face or neck. The lap belt may not fit over their small hip bones. In an accident, an improperly fitting seat belt could cause serious or fatal injury. Always use appropriate child restraints.**

All U.S. states and Canadian provinces or territories require the use of approved child restraints for infants and small children. See "Child restraints" in this section.

A child restraint may be secured in the vehicle by using either the LATCH (Lower Anchors and Tethers for CHildren) system or with the vehicle seat belt. See “Child restraints” in this section for more information.

**NISSAN recommends that all pre-teens and children be restrained in the rear seat. Studies show that children are safer when properly restrained in the rear seat than in the front seat.**

**This is especially important because your vehicle has a supplemental restraint system (air bag system) for the front passenger. See “Supplemental restraint system” in this section.**

## INFANTS

Infants up to at least 1 year old should be placed in a rear-facing child restraint. NISSAN recommends that infants be placed in child restraints that comply with Federal Motor Vehicle Safety Standards or Canadian Motor Vehicle Safety Standards. You should choose a child restraint that fits your vehicle and always follow the manufacturer’s instructions for installation and use.

## SMALL CHILDREN

Children that are over 1 year old and weigh at least 20 lbs (9 kg) should remain in a rear-facing child restraint as long as possible up to the height or weight limit of the child restraint. Children who outgrow the height or weight limit of the rear-facing child restraint and are at least 1 year old should be secured in a forward-facing child restraint with a harness. Refer to the manufacturer’s instructions for minimum and maximum weight and height recommendations. NISSAN recommends that small children be placed in child restraints that comply with Federal Motor Vehicle Safety Standards or Canadian Motor Vehicle Safety Standards. You should choose a child restraint that fits your vehicle and always follow the manufacturer’s instructions for installation and use.

## LARGER CHILDREN

Children should remain in a forward-facing child restraint with a harness until they reach the maximum height or weight limit allowed by the child restraint manufacturer.

Once a child outgrows the height or weight limit of the harness-equipped forward-facing child restraint, NISSAN recommends that the child be placed in a commercially available booster seat to obtain proper seat belt fit. For a seat belt to fit properly, the booster seat should raise the child so that the shoulder belt is properly positioned across the chest and the top, middle portion of the shoulder. The shoulder belt should not cross the neck or face and should not fall off the shoulder. The lap belt should lie snugly across the lower hips or upper thighs, not the abdomen. A booster seat can only be used in seating positions that have a three-point type seat belt. The booster seat should fit the vehicle seat and have a label certifying that it complies with Federal Motor Vehicle Safety Standards or Canadian Motor Vehicle Safety Standards. Once the child has grown so the shoulder belt is no longer on or near the face and neck and the lap belt can be positioned properly across the lower hips or upper thighs, use the seat belt without the booster seat.

**⚠ WARNING**

**Never let a child stand or kneel on any seat and do not allow a child in the cargo area. The child could be seriously injured or killed in a sudden stop or collision.**

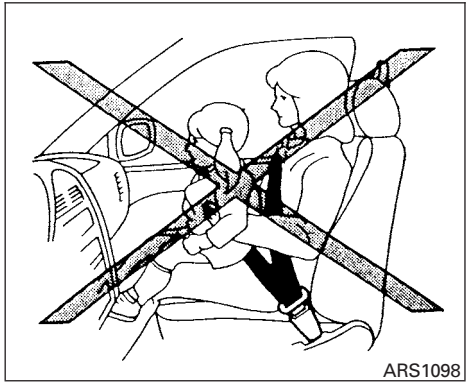
ARS1098

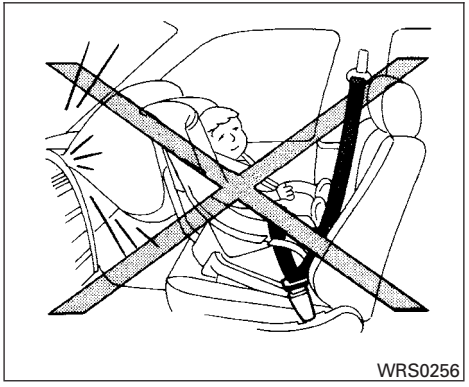
WRS0256

## PRECAUTIONS ON CHILD RESTRAINTS

**WARNING**

- **Failure to follow the warnings and instructions for proper use and installation of child restraints could result in serious injury or death of a child or other passengers in a sudden stop or collision:**
  - **The child restraint must be used and installed properly. Always follow all of the child restraint manufacturer's instructions for installation and use.**
  - **Infants and children should never be held on anyone's lap. Even the strongest adult cannot resist the forces of a collision.**
  - **Do not put a seat belt around both a child and another passenger.**
  - **NISSAN recommends that all child restraints be installed in the rear seat. Studies show that children are safer when properly restrained in the rear seat than in the front seat. If you must install a forward-facing child restraint in the front seat, see "Forward-facing child restraint installation using the seat belts" in this section.**
  - **Even with the NISSAN Advanced Air Bag System, never install a rear-facing child restraint in the front seat. An inflating air bag could seriously injure or kill a child. A rear-facing child restraint must only be used in the rear seat.**
  - **Be sure to purchase a child restraint that will fit the child and vehicle. Some child restraints may not fit properly in your vehicle.**

- **Child restraint anchor points are designed to withstand loads from child restraints that are properly fitted.**
- **Never use the anchor points for adult seat belts or harnesses.**
- **A child restraint with a top tether strap should not be used in the front passenger seat.**
- **Keep seatbacks as upright as possible after fitting the child restraint.**
- **Infants and children should always be placed in an appropriate child restraint while in the vehicle.**

- **When the child restraint is not in use, keep it secured with the LATCH system or a seat belt. In a sudden stop or collision, loose objects can injure occupants or damage the vehicle.**

**⚠ CAUTION**

**A child restraint in a closed vehicle can become very hot. Check the seating surface and buckles before placing a child in the child restraint.**

This vehicle is equipped with a universal child restraint anchor system, referred to as the LATCH (Lower Anchors and Tethers for CHildren) system. Some child restraints include rigid or webbing-mounted attachments that can be connected to these anchors. For details, see "LATCH (Lower Anchors and Tethers for CHildren) system" in this section.

If you do not have a LATCH compatible child restraint, the vehicle seat belts can be used.

Several manufacturers offer child restraints for infants and children of various sizes. When selecting any child restraint, keep the following points in mind:

- Choose only a restraint with a label certifying that it complies with Federal Motor Vehicle Safety Standard 213 or Canadian Motor Vehicle Safety Standard 213.
- Check the child restraint in your vehicle to be sure it is compatible with the vehicle's seat and seat belt system.
- If the child restraint is compatible with your vehicle, place your child in the child restraint and check the various adjustments to be sure the child restraint is compatible with your child. Choose a child restraint that is designed for your child's height and weight. Always follow all recommended procedures.

**All U.S. states and Canadian provinces or territories require that infants and small children be restrained in an approved child restraint at all times while the vehicle is being operated. Canadian law requires the top tether strap on forward-facing child restraints be secured to the designated anchor point on the vehicle.**

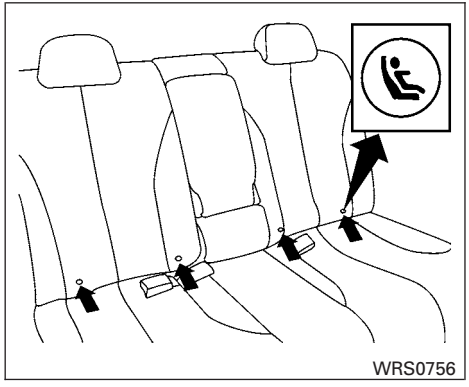


**LATCH system lower anchor locations**

## LATCH (Lower Anchors and Tethers for CHildren) SYSTEM

Your vehicle is equipped with special anchor points that are used with LATCH (Lower Anchors and Tethers for CHildren) system compatible child restraints. This system may also be referred to as the ISOFIX or ISOFIX compatible system. With this system, you do not have to use a vehicle seat belt to secure the child restraint.

The LATCH anchor points are provided to install child restraints in the rear outboard seating positions only. Do not attempt to install a child restraint in the center position using the LATCH anchors.

### LATCH lower anchor

**⚠ WARNING**

**Failure to follow the warnings and instructions for proper use and installation of child restraints could result in serious injury or death of a child or other passengers in a sudden stop or collision:**

- **Attach LATCH system compatible child restraints only at the locations shown in the illustration.**
- **Do not secure a child restraint in the center rear seating position using the LATCH lower anchors. The child restraint will not be secured properly.**
- **Inspect the lower anchors by inserting your fingers into the lower anchor area. Feel to make sure there are no obstructions over the anchors such as seat belt webbing or seat cushion material. The child restraint will not be secured properly if the lower anchors are obstructed.**
- **Child restraint anchorages are designed to withstand only those loads imposed by correctly fitted child restraints. Under no circumstances are they to be used to attach adult seat belts, or other items or equipment to the vehicle. Doing so could damage the child restraint anchorages. The child restraint will not be properly installed using the damaged anchorage, and a child could be seriously injured or killed in a collision.**

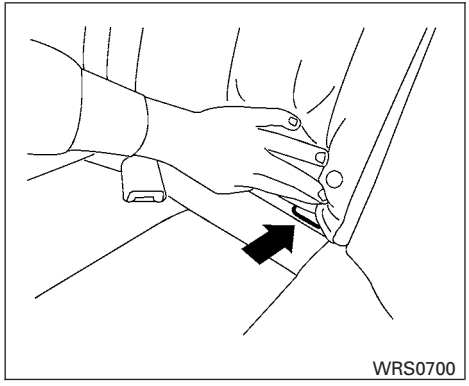


**LATCH lower anchor location**

## LATCH lower anchor location

The LATCH lower anchors are located at the rear of the seat cushion near the seatback. A label is attached to the seatback to help you locate the LATCH lower anchors.

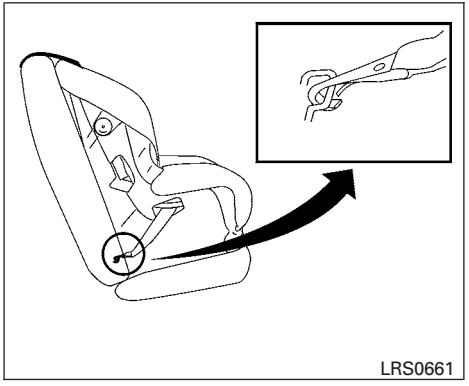


**LATCH webbing-mounted attachment**

## Installing child restraint LATCH lower anchor attachments

LATCH compatible child restraints include two rigid or webbing-mounted attachments that can be connected to two anchors located at certain seating positions in your vehicle. With this system, you do not have to use a vehicle seat belt to secure the child restraint. Check your child restraint for a label stating that it is compatible with LATCH. This information may also be in the instructions provided by the child restraint manufacturer.

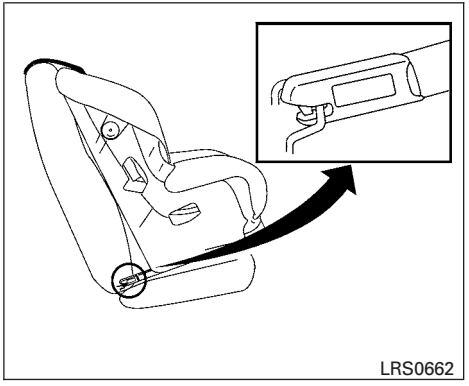


**LATCH rigid-mounted attachment**

When installing a child restraint, carefully read and follow the instructions in this manual and those supplied with the child restraint.

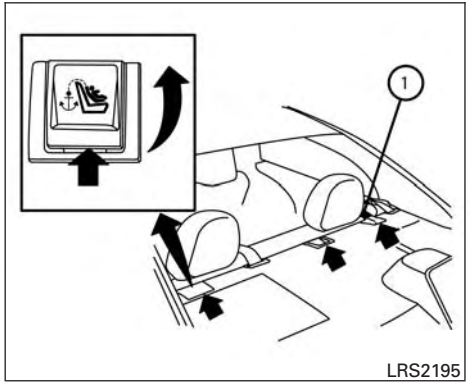


Top tether anchor point locations

**⚠ WARNING**

**Child restraint anchorages are designed to withstand only those loads imposed by correctly fitted child restraints. Under no circumstances are they to be used to attach adult seat belts, or other items or equipment to the vehicle. Doing so could damage the child restraint anchorages. The child restraint will not be properly installed using the damaged anchorage, and a child could be seriously injured or killed in a collision.**

The child restraint top tether strap must be used when installing the child restraint with the LATCH lower anchor attachments or seat belts. See “Installing top tether strap” in this section.

**If you have any questions when installing a top tether strap child restraint, consult your NISSAN dealer for details.**

Anchor points ① are located on the rear parcel shelf.

## REAR-FACING CHILD RESTRAINT INSTALLATION USING LATCH

Refer to all Warnings and Cautions in the “Child safety” and “Child restraints” sections before installing a child restraint.

NISSAN does not recommend the use of the lower anchors if the combined weight of the child and the child restraint exceeds 65 lbs (29.5 kg). If the combined weight of the child and the child restraint is greater than 65 lbs, (29.5 kg) use the vehicle’s seat belt (not the lower anchors) to install the child restraint. Be sure to follow the child restraint manufacturer’s instructions for installation.

Follow these steps to install a rear-facing child restraint using the LATCH system:

1. Position the child restraint on the seat. Always follow the child restraint manufacturer’s instructions.

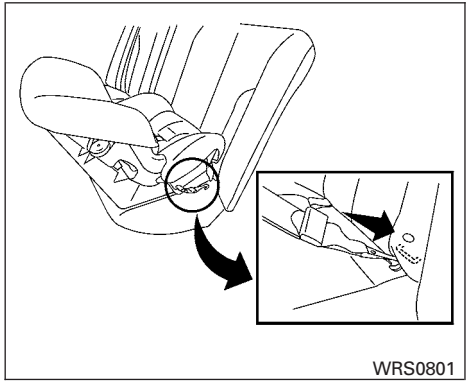


**Rear-facing web-mounted – step 2**

2. Secure the child restraint anchor attachments to the LATCH lower anchors. Check to make sure the LATCH attachment is properly attached to the lower anchors.

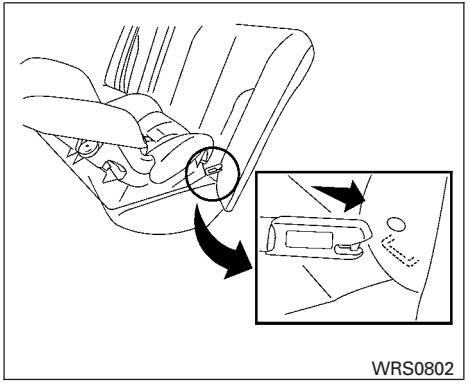


**Rear-facing rigid-mounted – step 2**

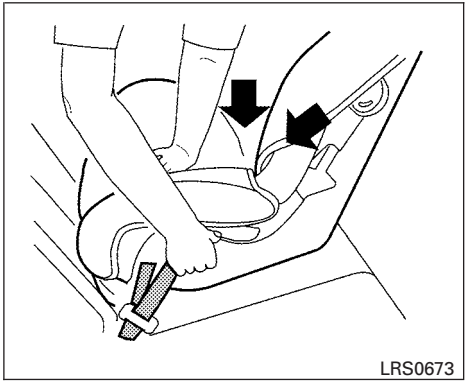


**Rear-facing – step 3**

3. For child restraints that are equipped with webbing-mounted attachments, remove any additional slack from the anchor attachments. Press downward and rearward firmly in the center of the child restraint with your hand to compress the vehicle seat cushion and seatback while tightening the webbing of the anchor attachments.

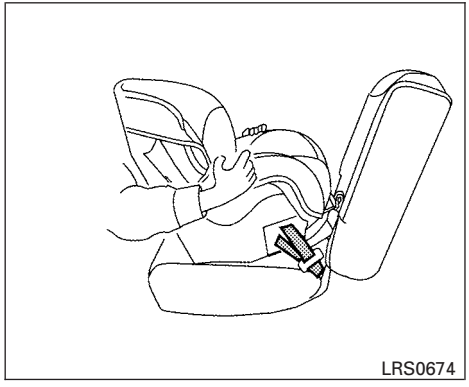


**Rear-facing – step 4**

4. After attaching the child restraint, test it before you place the child in it. Push it from side to side while holding the child restraint near the LATCH attachment path. The child restraint should not move more than 1 inch (25 mm), from side to side. Try to tug it forward and check to see if the LATCH attachment holds the restraint in place. If the restraint is not secure, tighten the LATCH attachment as necessary, or put the restraint in another seat and test it again. You may need to try a different child restraint or try installing by using the vehicle seat belt (if applicable). Not all child restraints fit in all types of vehicles.
5. Check to make sure the child restraint is properly secured prior to each use. If the child restraint is loose, repeat steps 1 through 4.

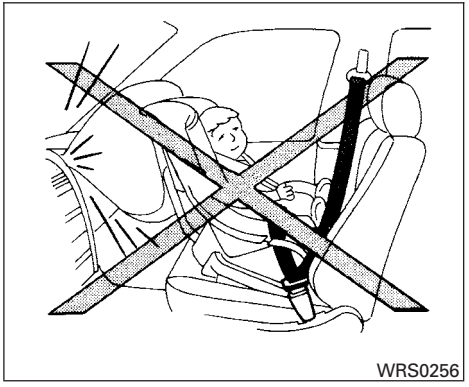


## REAR-FACING CHILD RESTRAINT INSTALLATION USING THE SEAT BELTS

**⚠ WARNING**

**The three-point seat belt with Automatic Locking Retractor (ALR) must be used when installing a child restraint. Failure to use the ALR mode will result in the child restraint not being properly secured. The restraint could tip over or be loose and cause injury to a child in a sudden stop or collision. Also, it can change the operation of the front passenger air bag. See "Supplemental air bag warning light" in this section.**

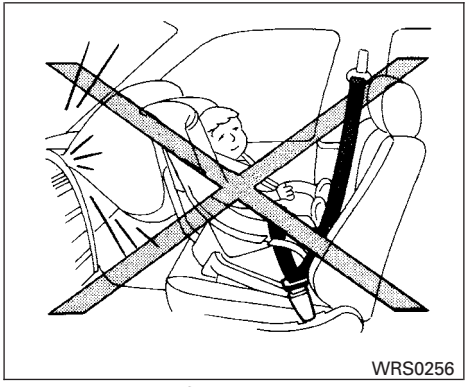


**Rear-facing – step 1**

Refer to all Warnings and Cautions in the "Child safety" and "Child restraints" sections before installing a child restraint.

Follow these steps to install a rear-facing child restraint using the vehicle seat belts in the rear seats:

1. **Child restraints for infants must be used in the rear-facing direction and therefore must not be used in the front seat.** Position the child restraint on the seat. Always follow the restraint manufacturer's instructions.

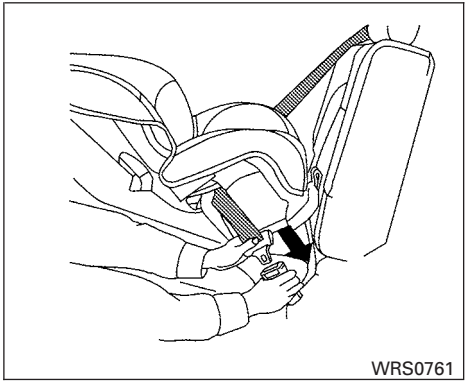


**Rear-facing – step 2**

2. Route the seat belt tongue through the child restraint and insert it into the buckle until you hear and feel the latch engage. Be sure to follow the child restraint manufacturer's instructions for belt routing.

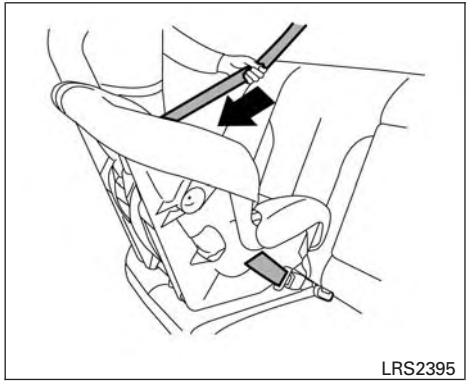


**Rear-facing – step 3**

3. Pull the shoulder belt until the belt is fully extended. At this time, the seat belt retractor is in the Automatic Locking Retractor (ALR) mode (child restraint mode). It reverts to the Emergency Locking Retractor (ELR) mode when the seat belt is fully retracted.

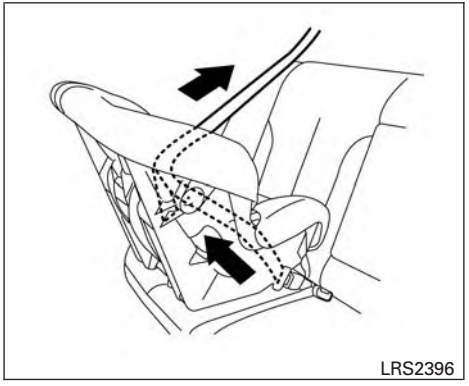


**Rear-facing – step 4**

4. Allow the seat belt to retract. Pull up on the shoulder belt to remove any slack in the belt.

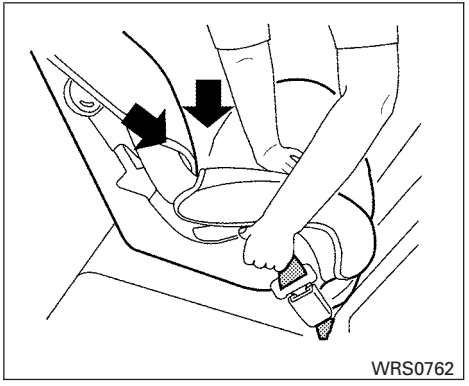


**Rear-facing – step 5**

5. Remove any additional slack from the seat belt; press downward and rearward firmly in the center of the child restraint to compress the vehicle seat cushion and seatback while pulling up on the seat belt.

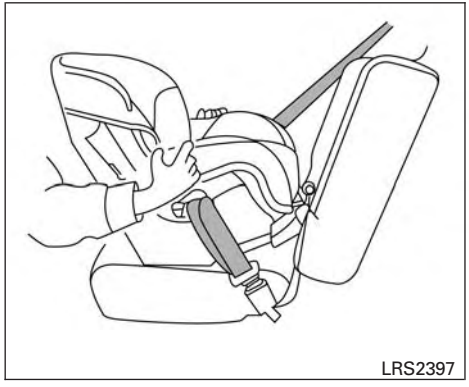


**Rear-facing – step 6**

6. After attaching the child restraint, test it before you place the child in it. Push it from side to side while holding the child restraint near the seat belt path. The child restraint should not move more than 1 inch (25 mm), from side to side. Try to tug it forward and check to see if the belt holds the restraint in place. If the restraint is not secure, tighten the seat belt as necessary, or put the restraint in another seat and test it again. You may need to try a different child restraint. Not all child restraints fit in all types of vehicles.
7. Check to make sure that the child restraint is properly secured prior to each use. If the seat belt is not locked, repeat steps 1 through 6.

After the child restraint is removed and the seat belt fully retracted, the ALR mode (child restraint mode) is canceled.

## FORWARD-FACING CHILD RESTRAINT INSTALLATION USING LATCH

Refer to all Warnings and Cautions in the “Child safety” and “Child restraints” sections before installing a child restraint.

Follow these steps to install a forward-facing child restraint using the LATCH system:

1. Position the child restraint on the seat. Always follow the child restraint manufacturer’s instructions.

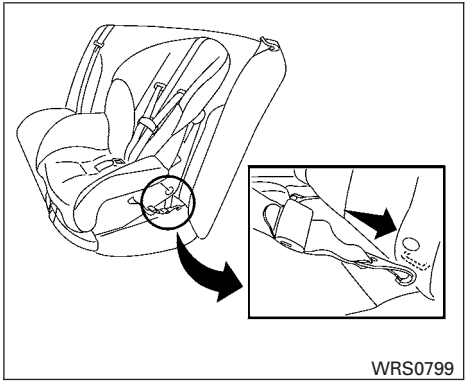


**Forward-facing web-mounted – step 2**

2. Secure the child restraint anchor attachments to the LATCH lower anchors. Check to make sure the LATCH attachment is properly attached to the lower anchors.

   If the child restraint is equipped with a top tether strap, route the top tether strap and secure the tether strap to the tether anchor point. See “Installing top tether strap” in this section. Do not install child restraints that require the use of a top tether strap in seating positions that do not have a top tether anchor.

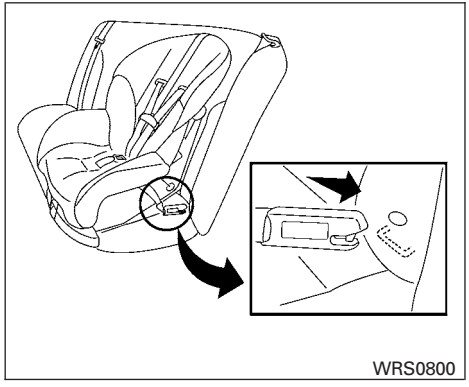


**Forward-facing rigid-mounted – step 2**

3. The back of the child restraint should be secured against the vehicle seatback.

   If necessary, adjust or remove the head restraint/headrest to obtain the correct child restraint fit. If the head restraint/headrest is removed, store it in a secure place. **Be sure to reinstall the head restraint/headrest when the child restraint is removed.** See "Head restraints/headrests" in this section for head restraint/headrest adjustment information.

If the seating position does not have an adjustable head restraint/headrest and it is interfering with the proper child restraint fit, try another seating position or a different child restraint.

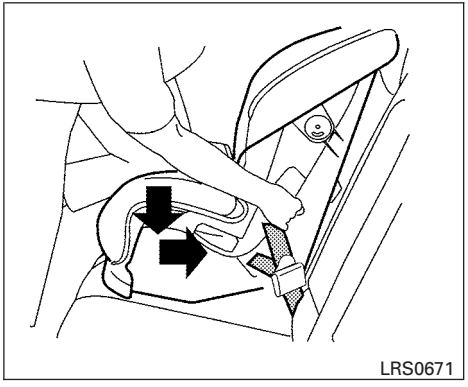


**Forward-facing – step 4**

4. For child restraints that are equipped with webbing-mounted attachments, remove any additional slack from the anchor attachments. Press downward and rearward firmly in the center of the child restraint with your knee to compress the vehicle seat cushion and seatback while tightening the webbing of the anchor attachments.

5. Tighten the tether strap according to the manufacturer's instructions to remove any slack.

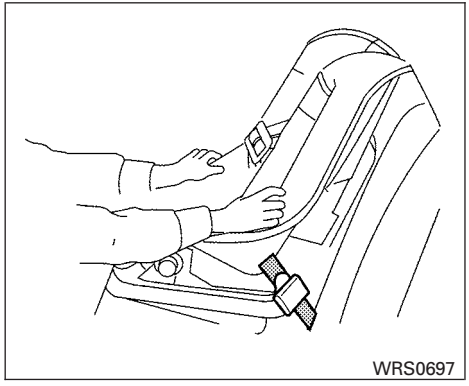


**Forward-facing – step 6**

6. After attaching the child restraint, test it before you place the child in it. Push it from side to side while holding the child restraint near the LATCH attachment path. The child restraint should not move more than 1 inch (25 mm), from side to side. Try to tug it forward and check to see if the LATCH attachment holds the restraint in place. If the restraint is not secure, tighten the LATCH attachment as necessary, or put the restraint in another seat and test it again. You may need to try a different child restraint. Not all child restraints fit in all types of vehicles.
7. Check to make sure the child restraint is properly secured prior to each use. If the child restraint is loose, repeat steps 1 through 6.

## FORWARD-FACING CHILD RESTRAINT INSTALLATION USING THE SEAT BELTS

**⚠ WARNING**

**The three-point seat belt with Automatic Locking Retractor (ALR) must be used when installing a child restraint. Failure to use the ALR mode will result in the child restraint not being properly secured. The restraint could tip over or be loose and cause injury to a child in a sudden stop or collision. Also, it can change the operation of the front passenger air bag. See "Supplemental air bag warning light" in this section.**

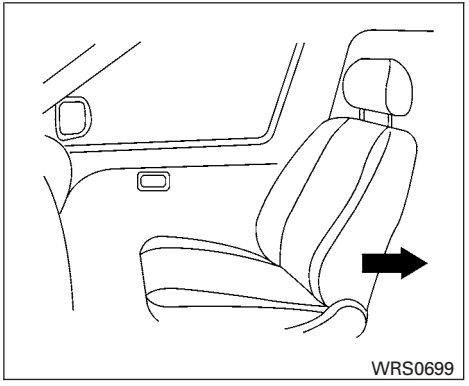


**Forward-facing (front passenger seat) – step 1**

Refer to all Warnings and Cautions in the "Child Safety" and "Child Restraint" sections before installing a child restraint.

Follow these steps to install a forward-facing child restraint using the vehicle seat belt in the rear seats or in the front passenger seat:

1. **If you must install a child restraint in the front seat, it should be placed in a forward-facing direction only. Move the seat to the rearmost position. Child restraints for infants must be used in the rear-facing direction and, therefore, must not be used in the front seat.**

2. Position the child restraint on the seat. Always follow the child restraint manufacturer's instructions.

   The back of the child restraint should be secured against the vehicle seatback.

   If necessary, adjust or remove the head restraint/headrest to obtain the correct child restraint fit. If the head restraint/headrest is removed, store it in a secure place. **Be sure to reinstall the head restraint/headrest when the child restraint is removed.** See "Head restraints/headrests" in this section for head restraint/headrest adjustment, removal and installation information.

   If the seating position does not have an adjustable head restraint/headrest and it is interfering with the proper child restraint fit, try another seating position or a different child restraint.

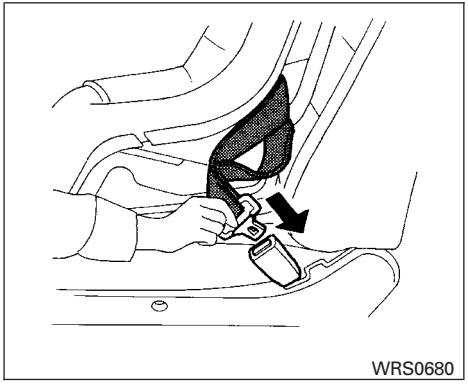


**Forward-facing – step 3**

3. Route the seat belt tongue through the child restraint and insert it into the buckle until you hear and feel the latch engage. Be sure to follow the child restraint manufacturer's instructions for belt routing.

   If the child restraint is equipped with a top tether strap, route the top tether strap and secure the tether strap to the tether anchor point. See "Installing top tether strap" in this section. Do not install child restraints that require the use of a top tether strap in seating positions that do not have a top tether anchor.

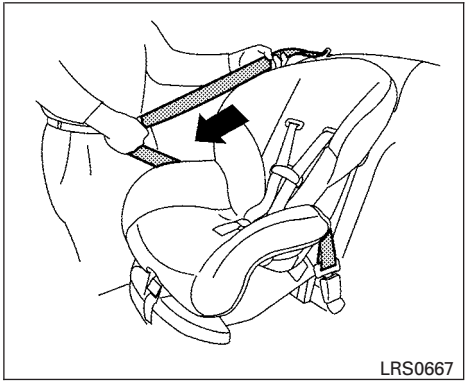


**Forward-facing – step 4**

4. Pull the shoulder belt until the belt is fully extended. At this time, the seat belt retractor is in the Automatic Locking Retractor (ALR) mode (child restraint mode). It reverts to Emergency Locking Retractor (ELR) mode when the seat belt is fully retracted.

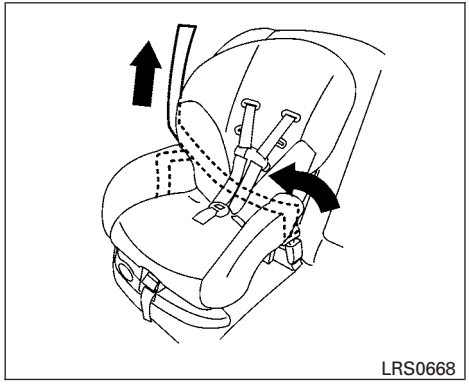


**Forward-facing – step 5**

5. Allow the seat belt to retract. Pull up on the shoulder belt to remove any slack in the belt.

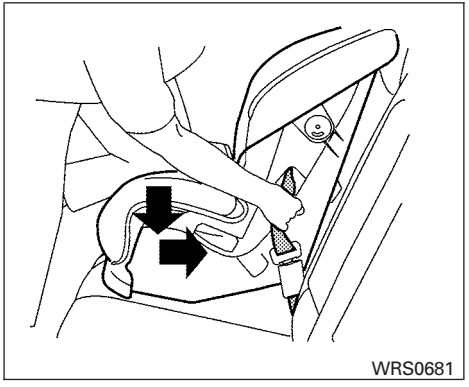


**Forward-facing – step 6**

6. Remove any additional slack from the seat belt; press downward and rearward firmly in the center of the child restraint with your knee to compress the vehicle seat cushion and seatback while pulling up on the seat belt.
7. Tighten the tether strap according to the manufacturer's instructions to remove any slack.

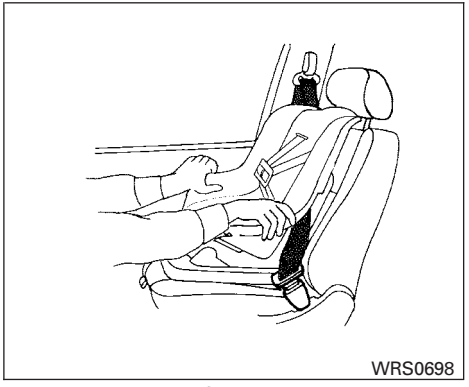


**Forward-facing – step 8**

8. After attaching the child restraint, test it before you place the child in it. Push it from side to side while holding the child restraint near the seat belt path. The child restraint should not move more than 1 inch (25 mm), from side to side. Try to tug it forward and check to see if the belt holds the restraint in place. If the restraint is not secure, tighten the seat belt as necessary, or put the restraint in another seat and test it again. You may need to try a different child restraint. Not all child restraints fit in all types of vehicles.

9. Check to make sure the child restraint is properly secured prior to each use. If the seat belt is not locked, repeat steps 2 through 8.

**Forward-facing — step 10**

10. If the child restraint is installed in the front passenger seat, place the ignition switch in the ON position. The front passenger air bag status light should illuminate. If this light is not illuminated, see “Supplemental air bag warning light” in this section. **Move the child restraint to another seating position.** Have the system checked by a NISSAN dealer.

After the child restraint is removed and the seat belt is fully retracted, the ALR mode (child restraint mode) is canceled.

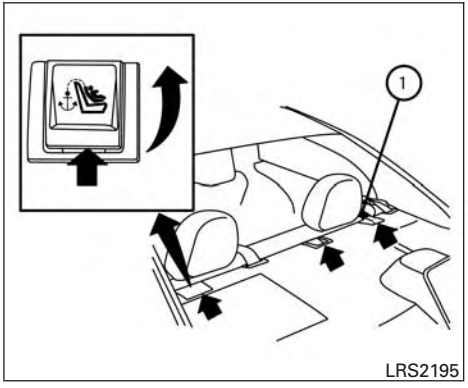


## INSTALLING TOP TETHER STRAP

**⚠ WARNING**

**Child restraint anchorages are designed to withstand only those loads imposed by correctly fitted child restraints. Under no circumstances are they to be used to attach adult seat belts, or other items or equipment to the vehicle. Doing so could damage the child restraint anchorages. The child restraint will not be properly installed using the damaged anchorage, and a child could be seriously injured or killed in a collision.**

First, secure the child restraint with the LATCH lower anchors (rear outboard seat positions only) or the seat belt, as applicable.

1. Flip up the anchor cover ① from the anchor point which is located directly behind the child seat.
2. Position the top tether strap over the top of the head rest.
3. Secure the tether strap to the tether anchor point on the rear parcel shelf.
4. Refer to the appropriate child restraint installation procedure steps in this section before tightening the tether strap.

**If you have any questions when installing a top tether strap, consult your NISSAN dealer for details.**

## BOOSTER SEATS

### Precautions on booster seats

**⚠ WARNING**

**If a booster seat and seat belt are not used properly, the risk of a child being injured in a sudden stop or collision greatly increases:**

- **Make sure the shoulder portion of the belt is away from the child's face and neck and the lap portion of the belt does not cross the stomach.**
- **Make sure the shoulder belt is not behind the child or under the child's arm.**
- **A booster seat must only be installed in a seating position that has a lap/shoulder belt.**

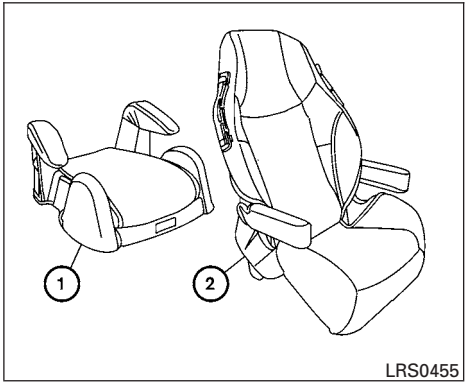

LRS0455

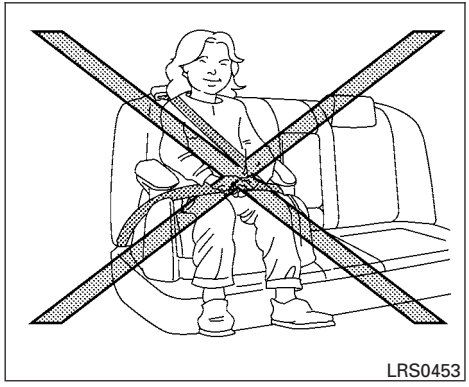
LRS0453

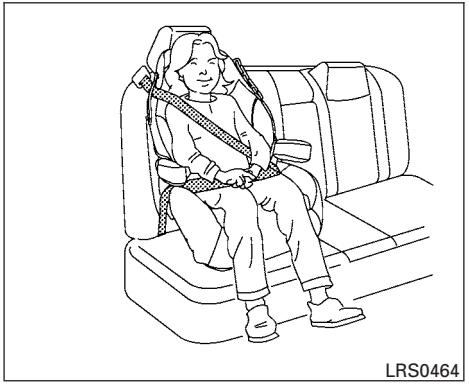
LRS0464

Booster seats of various sizes are offered by several manufacturers. When selecting any booster seat, keep the following points in mind:

- Choose only a booster seat with a label certifying that it complies with Federal Motor Vehicle Safety Standard 213 or Canadian Motor Vehicle Safety Standard 213.
- Check the booster seat in your vehicle to be sure it is compatible with the vehicle's seat and seat belt system.
- Make sure the child's head will be properly supported by the booster seat or vehicle seat. The seatback must be at or above the center of the child's ears. For example, if a low back booster seat ① is chosen, the vehicle seatback must be at or above the center of the child's ears. If the seatback is lower than the center of the child's ears, a high back booster seat ② should be used.
- If the booster seat is compatible with your vehicle, place the child in the booster seat and check the various adjustments to be sure the booster seat is compatible with the child. Always follow all recommended procedures.

**All U.S. states and Canadian provinces or territories require that infants and small children be restrained in an approved child restraint at all times while the vehicle is being operated.**

The instructions in this section apply to booster seat installation in the rear seats or the front passenger seat.

## Booster seat installation

**⚠ CAUTION**

**Do not use the lap/shoulder belt in the Automatic Locking Retractor mode when using a booster seat with the seat belts.**

Refer to all Warnings and Cautions in the “Child safety”, “Child restraints” and “Booster seats” sections before installing a child restraint.

Follow these steps to install a booster seat in the rear seat or in the front passenger seat:

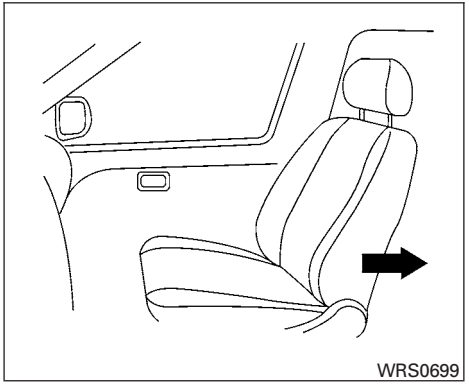


1. **If you must install a booster seat in the front seat, move the seat to the rear-most position.**
2. Position the booster seat on the seat. Only place it in a front-facing direction. Always follow the booster seat manufacturer’s instructions.

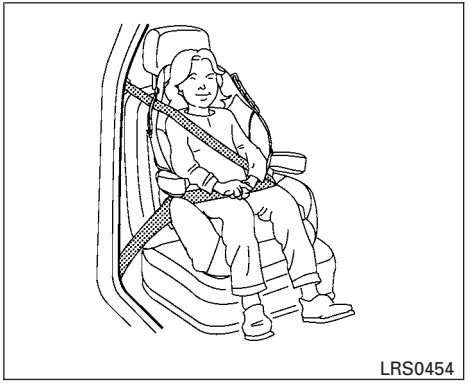


**Front passenger position**

3. The booster seat should be positioned on the vehicle seat so that it is stable.

   If necessary, adjust or remove the head restraint/headrest to obtain the correct booster seat fit. If the head restraint/headrest is removed, store it in a secure place. **Be sure to reinstall the head restraint/headrest when the booster seat is removed.** See “Head restraints/headrests” in this section for head restraint/headrest adjustment, removal and installation information.

If the seating position does not have an adjustable head restraint/headrest and it is interfering with the proper booster seat fit, try another seating position or a different booster seat.

4. Position the lap portion of the seat belt low and snug on the child's hips. Be sure to follow the booster seat manufacturer's instructions for adjusting the seat belt routing.
5. Pull the shoulder belt portion of the seat belt toward the retractor to take up extra slack. Be sure the shoulder belt is positioned across the top, middle portion of the child's shoulder. Be sure to follow the booster seat manufacturer's instructions for adjusting the seat belt routing.
6. Follow the warnings, cautions and instructions for properly fastening a seat belt shown in "Three-point type seat belt with retractor" in this section.

7. If the booster seat is installed in the front passenger seat, place the ignition switch in the ON position. The front passenger air bag status light may or may not illuminate, depending on the size of the child and the type of booster seat being used. See "Supplemental air bag warning light" in this section.

## PRECAUTIONS ON SUPPLEMENTAL RESTRAINT SYSTEM

This Supplemental Restraint System (SRS) section contains important information concerning the following systems:

- Driver and passenger supplemental front-impact air bag (NISSAN Advanced Air Bag System)
- Front seat-mounted side-impact supplemental air bag
- Roof-mounted curtain side-impact supplemental air bag
- Seat belt with pretensioner

**Supplemental front-impact air bag system:** The NISSAN Advanced Air Bag System can help cushion the impact force to the head and chest of the driver and front passenger in certain frontal collisions.

**Front seat-mounted side-impact supplemental air bag system:** This system can help cushion the impact force to the chest area of the driver and front passenger in certain side impact collisions. The side air bags are designed to inflate on the side where the vehicle is impacted.

**Roof-mounted curtain side-impact supplemental air bag system:** This system can help cushion the impact force to the head of occupants in front and rear outboard seating positions in certain side-impact collisions. The curtain air bags are designed to inflate on the side where the vehicle is impacted.

These supplemental restraint systems are designed to **supplement** the crash protection provided by the driver and front passenger seat belts and are **not a substitute** for them. Seat belts should always be correctly worn and the occupant seated a suitable distance away from the steering wheel, instrument panel and door finishers. See "Seat belts" in this section for instructions and precautions on seat belt usage.

**The supplemental air bags operate only when the ignition switch is in the ON position.**

**After placing the ignition switch in the ON position, the supplemental air bag warning light illuminates. The supplemental air bag warning light will turn off after about 7 seconds if the system is operational.**

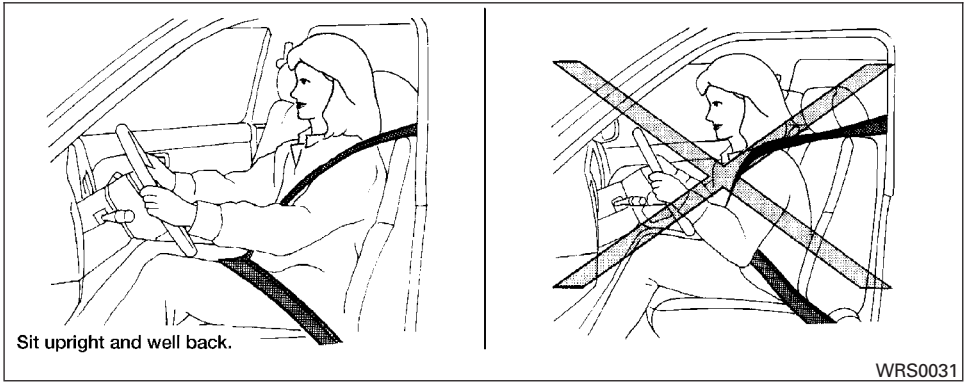


**⚠ WARNING**

- **The front air bags ordinarily will not inflate in the event of a side impact, rear impact, rollover, or lower severity frontal collision. Always wear your seat belts to help reduce the risk or severity of injury in various kinds of accidents.**
- **The front passenger air bag will not inflate if the passenger air bag status light is lit or if the front passenger seat is unoccupied. See "Front passenger air bag and status light" in this section.**
- **The seat belts and the front air bags are most effective when you are sitting well back and upright in the seat. The front air bags inflate with great force. Even with the NISSAN Advanced Air Bag System, if you are unrestrained, leaning forward, sitting sideways or out of position in any way, you are at greater risk of injury or death in a crash. You may also receive serious or fatal injuries from the front air bag if you are up against it when it inflates. Always sit back against the seatback and as far away as practical from the steering wheel or instrument panel. Always use the seat belts.**

- **The driver and front passenger seat belt buckles are equipped with sensors that detect if the seat belts are fastened. The Advanced Air Bag System monitors the severity of a collision and seat belt usage then inflates the air bags as needed. Failure to properly wear seat belts can increase the risk or severity of injury in an accident.**
- **The front passenger seat is equipped with an occupant classification sensor (weight sensor) that turns the front passenger air bag OFF under some conditions. This sensor is only used in this seat. Failure to be properly seated and wearing the seat belt can increase the risk or severity of injury in an accident. See "Front Passenger air bag and status light" in this section.**
- **Keep hands on the outside of the steering wheel. Placing them inside the steering wheel rim could increase the risk that they are injured when the front air bag inflates.**

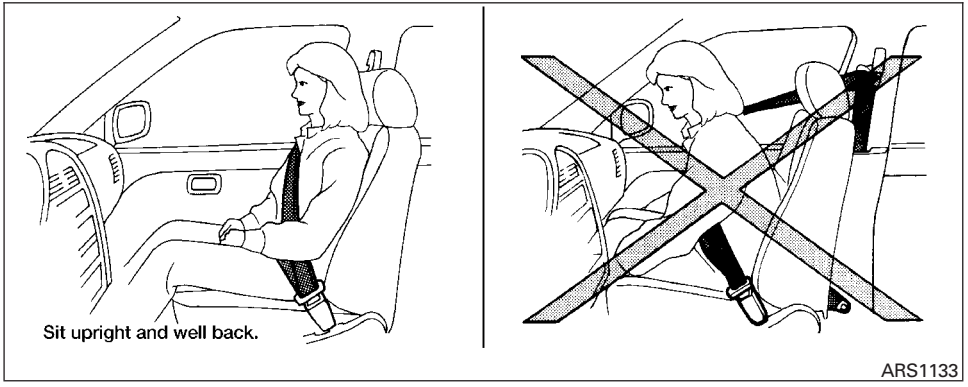

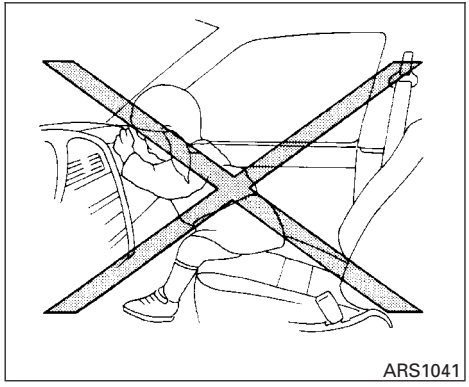
ARS1041

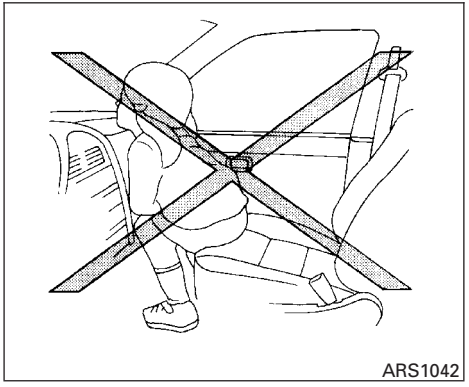
ARS1042

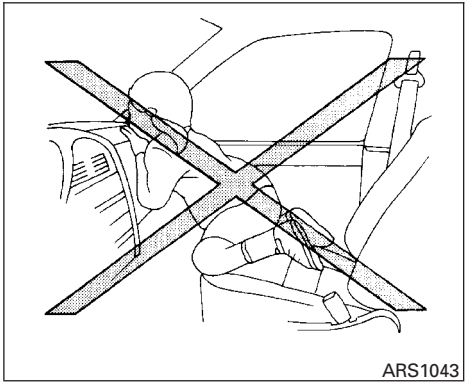
ARS1043

**⚠ WARNING**

- **Never let children ride unrestrained or extend their hands or face out of the window. Do not attempt to hold them in your lap or arms. Some examples of dangerous riding positions are shown in the illustrations.**

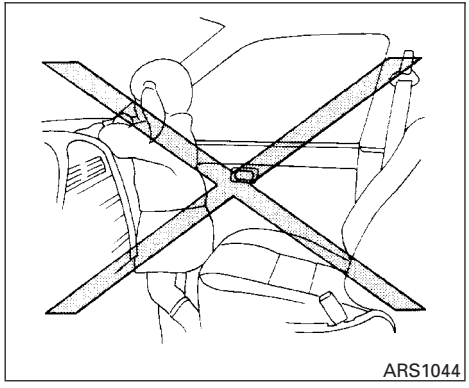
ARS1044

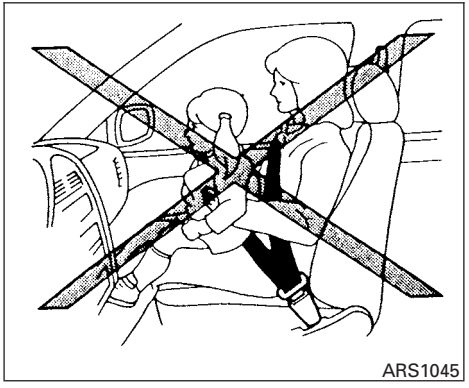
ARS1045

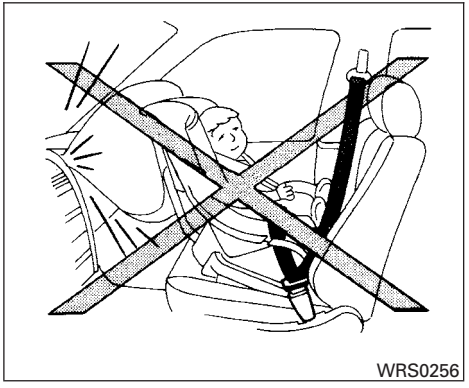
WRS0256

**⚠ WARNING**

- **Children may be severely injured or killed when the front air bags, side air bags or curtain air bags inflate if they are not properly restrained. Pre-teens and children should be properly restrained in the rear seat, if possible.**
- **Even with the NISSAN Advanced Air Bag System, never install a rear-facing child restraint in the front seat. An inflating front air bag could seriously injure or kill your child. See "Child restraints" in this section for details.**

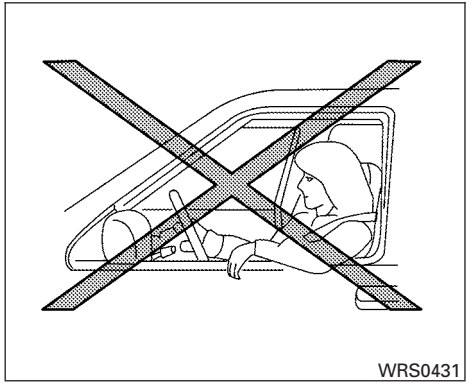


**⚠ WARNING**

**Front seat-mounted side-impact supplemental air bags and roof-mounted curtain side-impact supplemental air bags:**

- **The side air bags and curtain air bags ordinarily will not inflate in the event of a frontal impact, rear impact, rollover or lower severity side collision. Always wear your seat belts to help reduce the risk or severity of injury in various kinds of accidents.**

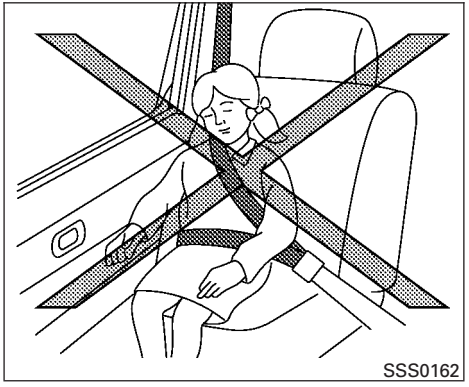


**⚠ WARNING**

- **The seat belts, the side air bags and curtain air bags are most effective when you are sitting well back and upright in the seat with both feet on the floor. The side air bag and curtain air bag inflate with great force. Do not allow anyone to place their hand, leg or face near the side air bag on the side of the seatback of the front seat or near the side roof rails. Do not allow anyone sitting in the front seats or rear outboard seats to extend their hand out of the window or lean against the door. Some examples of dangerous riding positions are shown in the previous illustrations.**

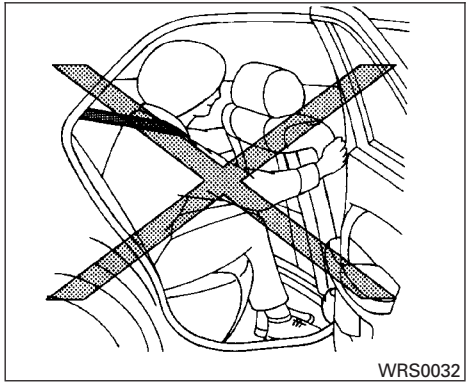
WRS0032

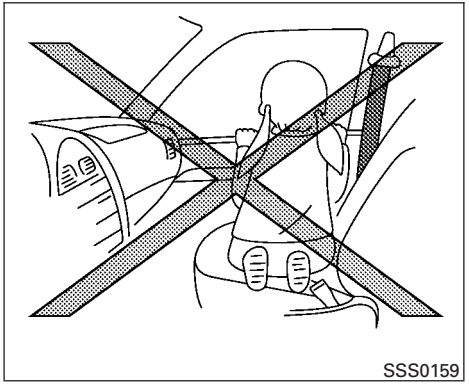
SSS0159

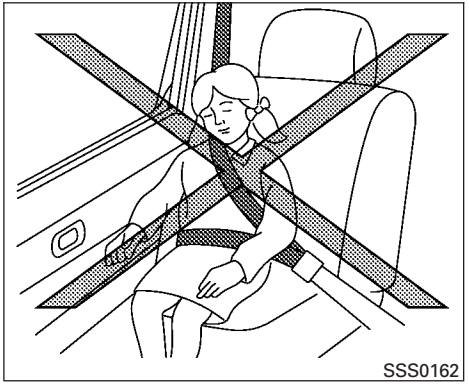
SSS0162

**⚠ WARNING**

- **When sitting in the rear seat, do not hold onto the seatback of the front seat. If the side air bag inflates, you may be seriously injured. Be especially careful with children, who should always be properly restrained. Some examples of dangerous riding positions are shown in the illustrations.**
- **Do not use seat covers on the front seatbacks. They may interfere with side air bag inflation.**

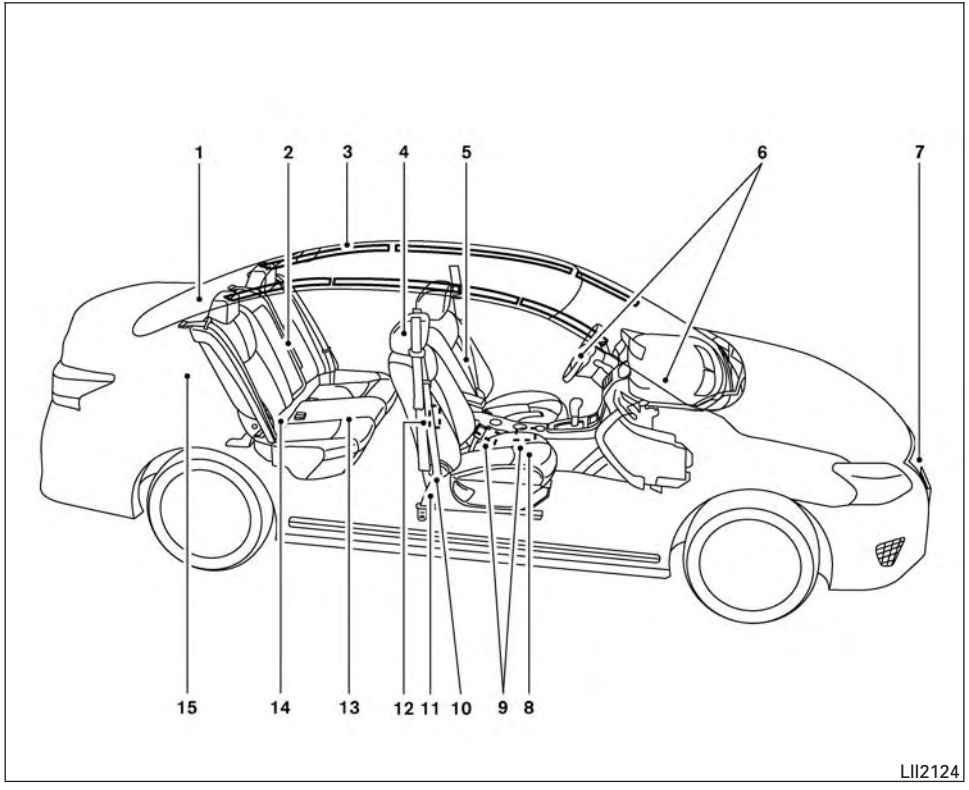


1. Top tether anchor
2. Rear seat belts
3. Roof-mounted curtain side-impact supplemental air bag
4. Head restraints/headrests
5. Front seat belts
6. Supplemental front-impact air bags
7. Front crash zone sensor
8. Front seats
9. Occupant classification sensor (weight sensor)
10. Satellite crash zone sensor
11. Seat belt with pretensioner
12. Front seat-mounted side-impact supplemental air bag
13. Rear seats
14. LATCH (Lower Anchors and Tethers for CHildren) system
15. Satellite crash zone sensor

## NISSAN Advanced Air Bag System (front seats)

**⚠ WARNING**

**To ensure proper operation of the passenger's advanced air bag system, please observe the following items.**

- **Do not allow a passenger in the rear seat to push or pull on the seatback pocket.**
- **Do not place heavy loads heavier than 2.2 lb (1 kg) on the seatback, head restraint/headrest or in the seatback pocket.**
- **Do not store luggage behind the seat that can press into the seatback.**
- **Do not position the front passenger seat so it contacts the rear seat. If the front seat does contact the rear seat, the air bag system may determine a sensor malfunction has occurred and the front passenger air bag status light may illuminate and the supplemental air bag warning light may flash.**
- **If a forward facing child restraint is installed in the front passenger seat, do not position the front passenger seat so the child restraint contacts the instrument panel. If the child restraint does contact the instrument panel, the system may determine the seat is occupied and the passenger air bag may deploy in a collision. Also the front passenger air bag status light may not illuminate. See "Child restraints" in this section for information about installing and using child restraints.**
- **Confirm the operating condition with the front passenger air bag status light.**
- **If you notice that the front passenger air bag status light is not operating as described in this section, please take your vehicle to your NISSAN dealer to check the occupant classification system.**
- **Until you have confirmed with your dealer that your passenger seat occupant classification system is working properly, position the occupants in the rear seating positions.**

This vehicle is equipped with the NISSAN Advanced Air Bag System for the driver and front passenger seats. This system is designed to meet certification requirements under U.S. regulations. It is also permitted in Canada. **All of the information, cautions and warnings in this manual must be followed.**

The driver supplemental front-impact air bag is located in the center of the steering wheel. The passenger supplemental front-impact air bag is mounted in the dashboard above the glove box. The front air bags are designed to inflate in higher severity frontal collisions, although they may inflate if the forces in another type of collision are similar to those of a higher severity frontal impact. They may not inflate in certain frontal collisions. Vehicle damage (or lack of it) is not always an indication of proper front air bag system operation.

The NISSAN Advanced Air Bag System has dual stage inflators. It also monitors information from the crash zone sensor, the Air bag Control Unit (ACU), seat belt buckle sensors and Occupant Classification Sensor (weight sensor). Inflator operation is based on the severity of a collision and seat belt usage for the driver. For the front passenger, the occupant classification sensors are also monitored. Based on information from the sensors, only one front air bag may inflate in a crash, depending on the crash severity and whether the front occupants are belted or unbelted. Additionally, the front passenger air bag may be automatically turned OFF under some conditions, depending on the weight detected on

the passenger seat and how the seat belt is used. If the front passenger air bag is OFF, the passenger air bag status light will be illuminated (if the seat is unoccupied, the light will not be illuminated, but the air bag will be off). See “Front passenger air bag and status light” in this section for further details. One front air bag inflating does not indicate improper performance of the system.

If you have any questions about your air bag system, please contact NISSAN or your NISSAN dealer. If you are considering modification of your vehicle due to a disability, you may also contact NISSAN. Contact information is contained in the front of this Owner’s Manual.

When a front air bag inflates, a fairly loud noise may be heard, followed by the release of smoke. This smoke is not harmful and does not indicate a fire. Care should be taken to not inhale it, as it may cause irritation and choking. Those with a history of a breathing condition should get fresh air promptly.

Front air bags, along with the use of seat belts, help to cushion the impact force on the face and chest of the front occupants. They can help save lives and reduce serious injuries. However, an inflating front air bag may cause facial abrasions or other injuries. Front air bags do not provide restraint to the lower body.

Even with NISSAN advanced air bags, seat belts should be correctly worn and the driver and passenger seated upright as far as practical away from the steering wheel or instrument panel. The front air bags inflate quickly in order to help protect the front occupants. Because of this, the force of the front air bag inflating can increase the risk of injury if the occupant is too close to, or is against, the front air bag module during inflation.

The front air bags deflate quickly after a collision.

**The front air bags operate only when the ignition switch is placed in the ON position.**

**After placing the ignition switch in the ON position, the supplemental air bag warning light illuminates. The supplemental air bag warning light will turn off after about 7 seconds if the system is operational.**

**Front passenger air bag and status light**

**⚠ WARNING**

**The front passenger air bag is designed to automatically turn OFF under some conditions. Read this section carefully to learn how it operates. Proper use of the seat, seat belt and child restraints is necessary for most effective protection. Failure to follow all instructions in this manual concerning the use of seats, seat belts and child restraints can increase the risk or severity of injury in an accident.**

### Status light

The front passenger air bag status light is located above the audio controls. After the ignition switch is placed in the "ON" position, the front passenger air bag status light on the instrument panel illuminates for about 7 seconds and then turns off or remains illuminated depending on the front passenger seat occupied status. The light operates as follows:

- Unoccupied passenger's seat: The is OFF and the front passenger air bag is OFF and will not inflate in a crash.
- Passenger's seat occupied by a small adult, child or child restraint as outlined in this section: The illuminates to indicate that the front passenger air bag is OFF and will not inflate in a crash.
- Occupied passenger seat and the passenger meet the conditions outlined in this section: The light is OFF to indicate that the front passenger air bag is operational.

### Front passenger air bag

The front passenger air bag is designed to automatically turn OFF when the vehicle is operated under some conditions as described below in accordance with U.S. regulations. If the front passenger air bag is OFF, it will not inflate in a crash. The driver air bag and other air bags in your vehicle are not part of this system.

The purpose of the regulation is to help reduce the risk of injury or death from an inflating air bag to certain front passenger seat occupants, such as children, by requiring the air bag to be automatically turned OFF. Certain sensors are used to meet the requirements.

The occupant classification sensors (weight sensors) are on the seat cushion frame under the front passenger seat and are designed to detect an occupant and objects on the seat. For example, if a child is in the front passenger seat, the Advanced Air Bag System is designed to turn the passenger air bag OFF in accordance with the regulations. Also, if a child restraint of the type specified in the regulations is on the seat, the occupant classification sensors can detect it and cause the air bag to turn OFF.

The front passenger seat belt sensor is designed to detect if the seat belt is buckled. Based on the weight on the seat detected by the occupant classification sensor and the buckle state, the Advanced Air Bag System determines whether the front passenger air bag should be automatically turned OFF as required by the regulations.

Front passenger seat adult occupants who are properly seated and using the seat belt as outlined in this manual should not cause the passenger air bag to be automatically turned OFF. For small adults it may be turned OFF, however if the occupant takes his/her weight off the seat cushion (for example, by not sitting upright, by sitting on an edge of the seat, or by otherwise being out of position), this could cause the sensor to turn the air bag OFF. Always be sure to be seated and wearing the seat belt properly for the most effective protection by the seat belt and supplemental air bag.

NISSAN recommends that pre-teens and children be properly restrained in a rear seat. NISSAN also recommends that appropriate child restraints and booster seats be properly installed in a rear seat. If this is not possible, the occupant classification sensor and seat belt sensors are designed to operate as described above to turn the front passenger air bag OFF for specified child restraints as required by the regulations. Failing to properly secure child restraints and to use the ALR mode (child restraint mode) may allow the restraint to tip or move in an accident or sudden stop. This can also result in the passenger air bag inflating in a crash instead of being OFF. See "Child restraints" in this section for proper use and installation.

If the front passenger seat is not occupied the passenger air bag is designed not to inflate in a crash. However, heavy objects placed on the seat could result in air bag inflation, because of

the object's weight detected by the occupant classification sensor. Other conditions could also result in air bag inflation, such as if a child is standing on the seat, or if two children are on the seat, contrary to the instructions in this manual. Always be sure that you and all vehicle occupants are seated and restrained properly.

Using the passenger air bag status light, you can monitor when the front passenger air bag is automatically turned OFF with the seat occupied. The light will not illuminate when the front passenger seat is unoccupied.

If an adult occupant is in the seat but the passenger air bag status light is illuminated (indicating that the air bag is OFF), it could be that the person is a small adult, or is not sitting on the seat properly or not using the seat belt properly.

If a child restraint must be used in the front seat, the passenger air bag status light may or may not be illuminated, depending on the size of the child and the type of child restraint being used. If the air bag status light is not illuminated (indicating that the air bag might inflate in a crash), it could be that the child restraint or seat belt is not being used properly. Make sure that the child restraint is installed properly, the seat belt is used properly and the occupant is positioned properly. If the air bag status light is not illuminated, reposition the occupant or child restraint in a rear seat.

If the passenger air bag status light will not illuminate even though you believe that the child restraint, the seat belts and the occupant are properly positioned, the system may be sensing an unoccupied seat (in which case the air bag is OFF). Your NISSAN dealer can check that the system is OFF by using a special tool. However, until you have confirmed with your dealer that your air bag is working properly, reposition the occupant or child restraint in a rear seat.

The NISSAN Advanced Air Bag System and passenger air bag status light will take a few seconds to register a change in the passenger seat status. For example, if a large adult who is sitting in the front passenger seat exits the vehicle, the passenger air bag status light will go from OFF to ON for a few seconds and then to OFF. This is normal system operation and does not indicate a malfunction.

If a malfunction occurs in the front passenger air bag system, the supplemental air bag warning light , located in the meter and gauges area in the center of the instrument panel, will blink. Have the system checked by a NISSAN dealer.

**Other supplemental front-impact air bag precautions**

**⚠ WARNING**

- **Do not place any objects on the steering wheel pad or on the instrument panel. Also, do not place any objects between any occupant and the steering wheel or instrument panel. Such objects may become dangerous projectiles and cause injury if the front air bags inflate.**
- **Do not place objects with sharp edges on the seat. Also, do not place heavy objects on the seat that will leave permanent impressions in the seat. Such objects can damage the seat or occupant classification sensors (weight sensors). This can affect the operation of the air bag system and result in serious personal injury.**
- **Do not use water or acidic cleaners (hot steam cleaners) on the seat. This can damage the seat or occupant classification sensors. This can also affect the operation of the air bag system and result in serious personal injury.**

- **Immediately after inflation, several front air bag system components will be hot. Do not touch them; you may severely burn yourself.**
- **No unauthorized changes should be made to any components or wiring of the supplemental air bag system. This is to prevent accidental inflation of the supplemental air bag or damage to the supplemental air bag system.**
- **Do not make unauthorized changes to your vehicle's electrical system, suspension system or front end structure. This could affect proper operation of the front air bag system.**
- **Tampering with the front air bag system may result in serious personal injury. Tampering includes changes to the steering wheel and the instrument panel assembly by placing material over the steering wheel pad and above the instrument panel or by installing additional trim material around the air bag system.**
- **Removing or modifying the front passenger seat may affect the function of the air bag and result in serious personal injury.**
- **Modifying or tampering with the front passenger seat may result in serious personal injury. For example, do not change the front seats by placing material on the seat cushion or by installing additional trim material, such as seat covers, on the seat that are not specifically designed to assure proper air bag operation. Additionally, do not stow any objects under the front passenger seat or the seat cushion and seatback. Such objects may interfere with the proper operation of the occupant classification sensor (weight sensor).**
- **No unauthorized changes should be made to any components or wiring of the seat belt system. This may affect the front air bag system. Tampering with the seat belt system may result in serious personal injury.**
- **Work on and around the front air bag system should be done by a NISSAN dealer. Installation of electrical equipment should also be done by a NISSAN dealer. The Supplemental Restraint System (SRS) wiring should not be modified or disconnected. Unauthorized electrical test equipment and probing devices should not be used on the air bag system.**
- **A cracked windshield should be replaced immediately by a qualified repair facility. A cracked windshield could affect the function of the supplemental air bag system.**

***The SRS wiring harness connectors are yellow and orange for easy identification.**

When selling your vehicle, we request that you inform the buyer about the supplemental front air bag system and guide the buyer to the appropriate sections in this Owner's Manual.

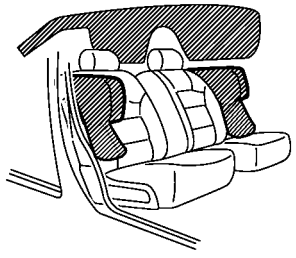

LRS0259

## Front seat-mounted side-impact supplemental air bag and roof-mounted curtain side-impact supplemental air bag systems

The side air bags are located in the outside of the seatback of the front seats. The curtain air bags are located in the side roof rails. **All of the information, cautions and warnings in this manual must be followed.** The side air bags and curtain air bags are designed to inflate in higher severity side collisions, although they may inflate if the forces in another type of collision are similar to those of a higher severity impact. They are designed to inflate on the side where the vehicle is impacted. They may not inflate in certain side collisions.

Vehicle damage (or lack of it) is not always an indication of proper side air bag and curtain air bag operation.

When the side air bags and curtain air bags inflate, a fairly loud noise may be heard, followed by release of smoke. This smoke is not harmful and does not indicate a fire. Care should be taken not to inhale it, as it may cause irritation and choking. Those with a history of a breathing condition should get fresh air promptly.

Side air bags, along with the use of seat belts, help to cushion the impact force on the chest of the front occupants. Curtain air bags help to cushion the impact force to the head of occupants in the front and rear outboard seating positions. They can help save lives and reduce serious injuries. However, an inflating side air bag and curtain air bag may cause abrasions or other injuries. Side air bags and curtain air bags do not provide restraint to the lower body.

The seat belts should be correctly worn and the driver and passenger seated upright as far as practical away from the side air bag. Rear seat passengers should be seated as far away as practical from the door finishers and side roof rails. The side air bags and curtain air bags inflate quickly in order to help protect the front and rear outboard occupants. Because of this, the force of the side air bag and curtain air bag inflating can increase the risk of injury if the occupant is too close to, or is against, these air bag modules during inflation. The side air bags and curtain air bags will deflate quickly after the collision is over.

**The side air bags and curtain air bags operate only when the ignition switch is in the ON position.**

**After placing the ignition switch in the ON position, the supplemental air bag warning light illuminates. The supplemental air bag warning light will turn off after about 7 seconds if the system is operational.**

**⚠ WARNING**

- **Do not place any objects near the seatback of the front seats. Also, do not place any objects (an umbrella, bag, etc.) between the front door finisher and the front seat. Such objects may become dangerous projectiles and cause injury if a side air bag inflates.**
- **Right after inflation, several side air bag and curtain air bag system components will be hot. Do not touch them; you may severely burn yourself.**

- **No unauthorized changes should be made to any components or wiring of the side air bag and curtain air bag systems. This is to prevent damage to or accidental inflation of the side air bag and curtain air bag or damage to the side air bag and curtain air bag systems.**
- **Do not make unauthorized changes to your vehicle's electrical system, suspension system or side panel. This could affect proper operation of the side air bag and curtain air bag systems.**
- **Tampering with the side air bag system may result in serious personal injury. For example, do not change the front seats by placing material near the seatbacks or by installing additional trim material, such as seat covers, around the side air bag.**
- **Work around and on the side air bag and curtain air bag systems should be done by a NISSAN dealer. Installation of electrical equipment should also be done by a NISSAN dealer. The SRS wiring harnesses* should not be modified or disconnected. Unauthorized electrical test equipment and probing devices should not be used on the side air bag or curtain air bag systems.**

*** The SRS wiring harness connectors are yellow and orange for easy identification.**

When selling your vehicle, we request that you inform the buyer about the side air bag and curtain air bag systems and guide the buyer to the appropriate sections in this Owner's Manual.

## Seat belts with pretensioners (front seats)

**⚠ WARNING**

- **The pretensioners cannot be reused after activation. They must be replaced together with the retractor and buckle as a unit.**
- **If the vehicle becomes involved in a collision but a pretensioner is not activated, be sure to have the pretensioner system checked and, if necessary, replaced by your NISSAN dealer.**
- **No unauthorized changes should be made to any components or wiring of the pretensioner system. This is to prevent damage to or accidental activation of the pretensioners. Tampering with the pretensioner system may result in serious personal injury.**
- **Work around and on the pretensioner system should be done by a NISSAN dealer. Installation of electrical equipment should also be done by a NISSAN dealer. Unauthorized electrical test equipment and probing devices should not be used on the pretensioner system.**
- **If you need to dispose of a pretensioner or scrap the vehicle, contact a NISSAN dealer. Incorrect disposal procedures could cause personal injury.**

The pretensioner system may activate with the supplemental air bag system in certain types of collisions. Working with the seat belt retractor, the pretensioner helps tighten the seat belt when the vehicle becomes involved in certain types of collisions, helping to restrain front seat occupants.

The pretensioner is encased within the seat belt retractor. These seat belts are used the same way as conventional seat belts.

When a pretensioner activates, smoke is released and a loud noise may be heard. This smoke is not harmful and does not indicate a fire. Care should be taken not to inhale it, as it may cause irritation and choking. Those with a history of a breathing condition should get fresh air promptly.

After pretensioner activation, load limiters allow the seat belt to release webbing (if necessary) to reduce forces against the chest.

The supplemental air bag warning light is used to indicate malfunctions in the pretensioner system. (See "SUPPLEMENTAL AIR BAG WARNING LIGHT" in this section for more details.) If the operation of the supplemental air bag warning light indicates there is a malfunction, have the system checked by a NISSAN dealer.

When selling your vehicle, we request that you inform the buyer about the pretensioner system and guide the buyer to the appropriate sections in this Owner's Manual.

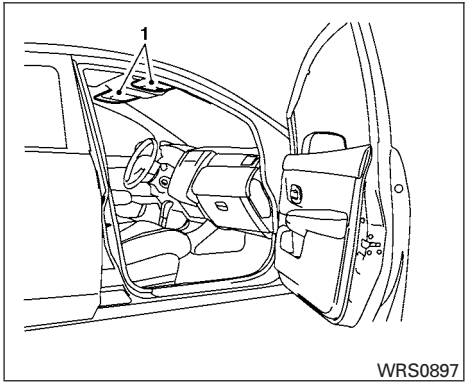


1. SRS Front Air Bag Warning Labels

## SUPPLEMENTAL AIR BAG WARNING LABELS

Warning labels about the supplemental front-impact air bag system are placed in the vehicle as shown in the illustration.

## SUPPLEMENTAL AIR BAG WARNING LIGHT

The supplemental air bag warning light, displaying in the instrument panel, monitors the circuits for the air bag systems, pretensioners and all related wiring.

When the ignition switch is placed in the ON or START position, the supplemental air bag warning light illuminates for about 7 seconds and then turns off. This means the system is operational.

If any of the following conditions occur, the front air bag, side air bag, curtain air bag and pretensioner systems need servicing:

- The supplemental air bag warning light remains on after approximately 7 seconds.
- The supplemental air bag warning light flashes intermittently.
- The supplemental air bag warning light does not come on at all.

Under these conditions, the front air bag, side air bag, curtain air bag or pretensioner systems may not operate properly. They must be checked and repaired. Take your vehicle to the nearest NISSAN dealer.

**⚠ WARNING**

**If the supplemental air bag warning light is on, it could mean that the front air bag, side air bag, curtain air bag and/or pretensioner systems will not operate in an accident. To help avoid injury to yourself or others, have your vehicle checked by a NISSAN dealer as soon as possible.**

## Repair and replacement procedure

The front air bags, side air bags, curtain air bags and pretensioners are designed to inflate on a one-time-only basis. As a reminder, unless it is damaged, the supplemental air bag warning light remains illuminated after inflation has occurred. Repair and replacement of these supplemental air bag systems should be done only by a NISSAN dealer.

When maintenance work is required on the vehicle, the front air bags, side air bags, curtain air bags, pretensioners and related parts should be pointed out to the person performing the maintenance. The ignition switch should always be placed in the LOCK position when working under the hood or inside the vehicle.

**⚠ WARNING**

- **Once a front air bag, side air bag, or curtain air bag has inflated, the air bag module will not function again and must be replaced. Additionally, the activated pretensioner must also be replaced. The air bag module and pretensioner should be replaced by a NISSAN dealer. The air bag module and pretensioner cannot be repaired.**
- **The front air bag, side air bag, curtain air bag systems and the pretensioner system should be inspected by a NISSAN dealer if there is any damage to the front end or side portion of the vehicle.**
- **If you need to dispose of the supplemental air bag or pretensioner systems or scrap the vehicle, contact a NISSAN dealer. Incorrect disposal procedures could cause personal injury.**
- **If there is an impact to your vehicle from any direction, your Occupant Detection Sensor (ODS) should be checked by a NISSAN dealer to verify it is still functioning correctly. The ODS should be checked even if no air bags deploy as a result of the impact. Failure to verify proper ODS function may result in an improper air bag deployment resulting in injury or death.**

**NOTE:**

**In the event of a crash involving an airbag deployment (side, front or both), the vehicle's hazard lamps (turn indicators) will activate.**

## MEMO

# 2 Instruments and controls


Instrument panel . . . . . 2-2
Meters and gauges . . . . . 2-3
Speedometer and odometer . . . . . 2-3
Tachometer . . . . . 2-5
Engine coolant temperature gauge . . . . . 2-6
Fuel gauge . . . . . 2-6
Trip computer . . . . . 2-7
Outside temperature display . . . . . 2-8
Compass display (if so equipped) . . . . . 2-8
Compass display . . . . . 2-9
Warning/indicator lights and audible reminders . . . . . 2-12
Checking bulbs . . . . . 2-13
Warning lights . . . . . 2-13
Indicator lights . . . . . 2-17
Audible reminders . . . . . 2-20
Security systems . . . . . 2-21
Vehicle security system (if so equipped) . . . . . 2-21
NISSAN vehicle immobilizer system (if so equipped) . . . . . 2-23
Windshield wiper and washer switch . . . . . 2-24
Switch operation . . . . . 2-24
Rear window and outside mirror (if so equipped) defroster switch . . . . . 2-25
Headlight and turn signal switch . . . . . 2-26
Headlight control switch . . . . . 2-26
Daytime running light system (Canada only) . . . . . 2-28
Instrument brightness control . . . . . 2-29
Turn signal switch . . . . . 2-29
Fog light switch (if so equipped) . . . . . 2-29
Horn . . . . . 2-30
Heated seats (if so equipped) . . . . . 2-30
Vehicle Dynamic Control (VDC) off switch . . . . . 2-31
Power outlet . . . . . 2-32
Storage . . . . . 2-33
Map pockets . . . . . 2-33
Storage trays . . . . . 2-33
Storage pouch . . . . . 2-34
Seatback pockets (if so equipped) . . . . . 2-34
Sunglasses holder . . . . . 2-35
Cup holders . . . . . 2-36
Glove box . . . . . 2-37
Console box . . . . . 2-37
Slide front armrest (if so equipped) . . . . . 2-38
Cargo net (if so equipped) . . . . . 2-39
Windows . . . . . 2-39
Power windows . . . . . 2-39

Moonroof (if so equipped) . . . . . 2-42
Power moonroof. . . . . 2-42
Interior lights . . . . . 2-44
Console light. . . . . 2-45
Dome light . . . . . 2-45
Map lights . . . . . 2-46
Trunk light . . . . . 2-46

## INSTRUMENT PANEL

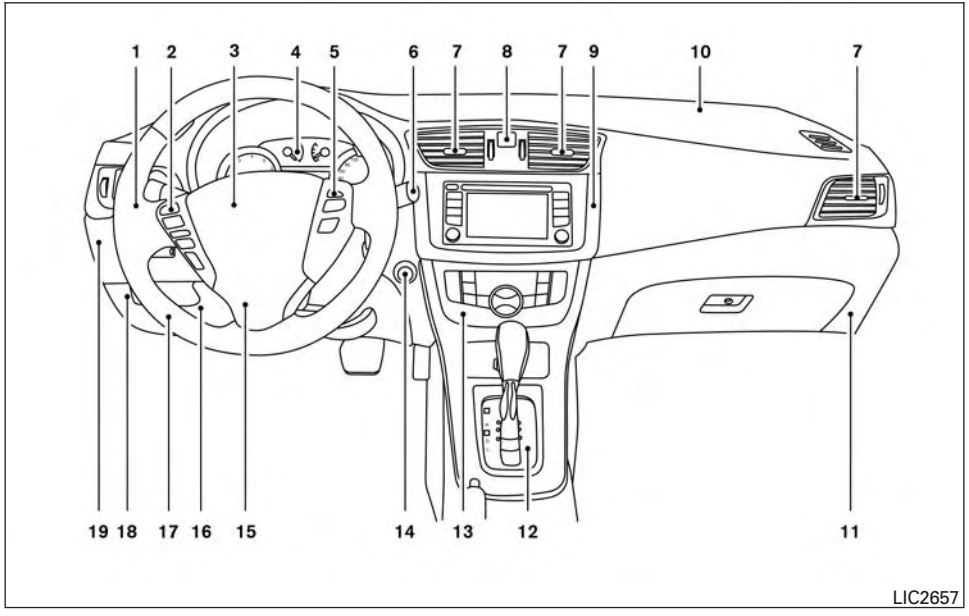


1. Headlight/fog light (if so equipped)/turn signal switch (P. 2-26)
2. Steering wheel switch for trip computer, audio control and Bluetooth® Hands-Free Phone System (if so equipped) (P. 2-7, 4-65)
3. Driver's supplemental air bag/Horn (P. 1-44, 2-30)
4. Meters and gauges (P. 2-3)
5. Cruise control main/set switches (if so equipped) (P. 5-24)
6. Windshield wiper/washer switch (P. 2-24)
7. Ventilator (P. 4-16)
8. Hazard warning flasher switch (P. 6-2)
9. Audio system (P. 4-27)
10. Passenger's supplemental air bag (P. 1-44)
11. Glove box (P. 2-37)
12. Shift lever (P. 5-17)
13. Climate control (P. 4-16, 4-24)
14. Ignition switch (if so equipped) (P. 5-8, 5-10)
15. Telescopic steering (P.3-27)
16. Hood release (P. 3-23)
17. Fuel filler door release (P. 3-25)
18. ECO mode switch (P. 5-22); SPORT mode switch (P.5-22); Vehicle Dynamic Control (VDC) OFF switch (P.2-31)
19. Instrument brightness control (P. 2-29); Power mirror switch (P.3-30); Trunk release (P.3-24)

* Refer to the separate Navigation System Owner's Manual (if so equipped).

**See the page number indicated in parentheses for operating details.**

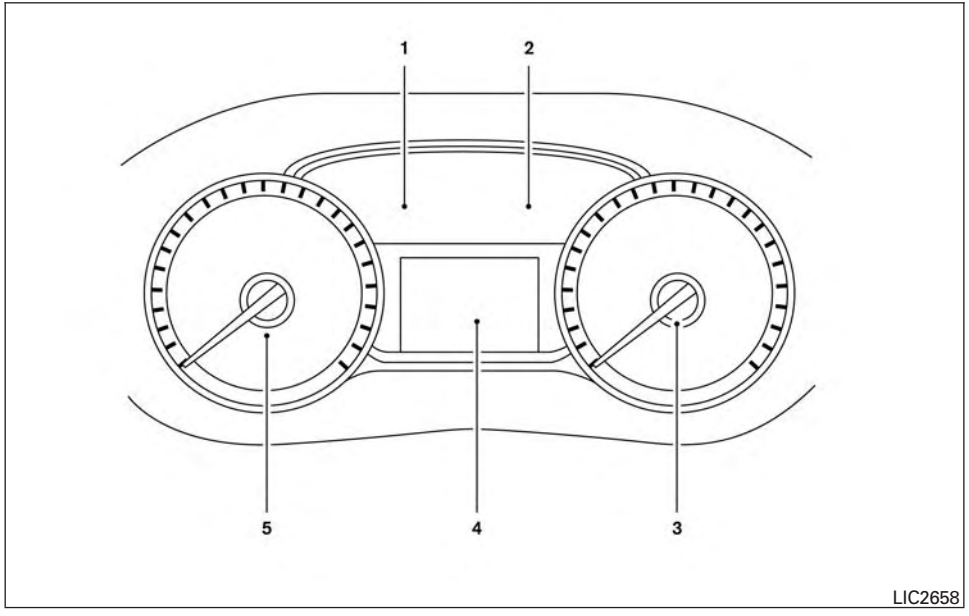


1. Engine coolant temperature gauge
2. Fuel gauge
3. Speedometer
4. Odometer/twin trip odometer/trip computer/fuel economy/Eco Pedal Indicator
5. Tachometer

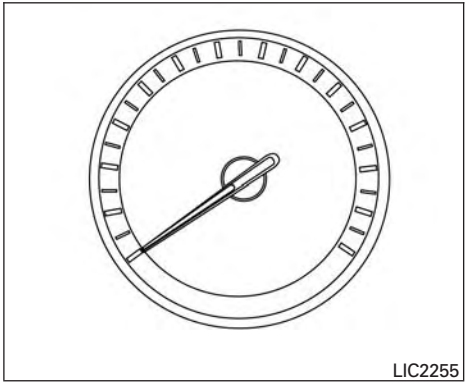


## SPEEDOMETER AND ODOMETER

### Speedometer

The speedometer indicates the vehicle speed.

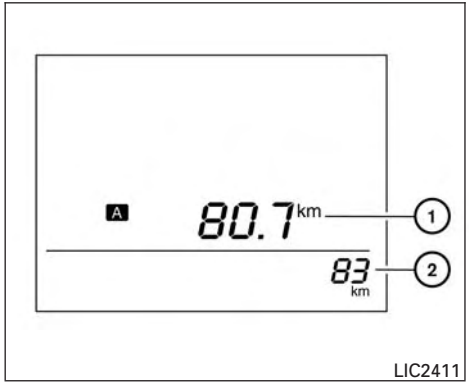

LIC2411

## Odometer/Twin trip odometer

The odometer ② and the twin trip odometer ① are displayed when the ignition switch is placed in the ON position.

The odometer records the total distance the vehicle has been driven.

The twin trip odometer records the distance of individual trips.

To switch between the odometer and the twin trip odometers press the ❑ button on the steering wheel.

**Changing the display:**

Push the ❑ button on the steering wheel to change the display as follows:

Accel guide/Average fuel economy → Instant fuel economy/Average fuel economy → Average fuel economy → Average speed → Distance to empty → Trip A → Trip B

**Resetting the trip odometer:**

Push the ❑ button on the steering wheel for more than 1 second to reset the currently displayed trip odometer to zero.

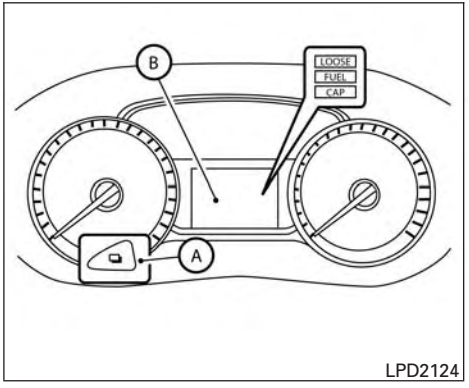

LPD2124

## Loose fuel cap warning message

Push the reset button Ⓐ for more than 1 second to reset the LOOSE FUEL CAP warning message Ⓑ after the fuel cap has been tightened. For additional information see “Fuel-filler cap” in the “Pre-driving checks and adjustments” section of this manual.

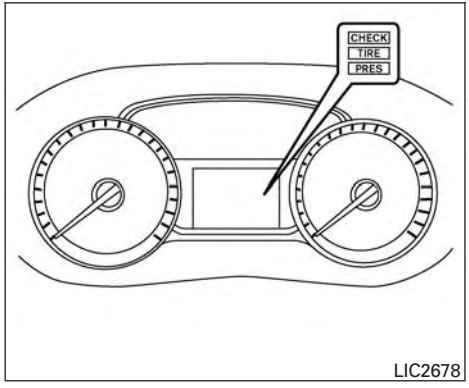

LIC2678

## Check tire pressure warning message

The CHECK TIRE PRES warning message is displayed when the low tire pressure warning light is illuminated and low tire pressure is detected. Check and adjust the tire pressure to the recommended COLD tire pressure shown on the Tire and Loading Information label. The CHECK TIRE PRES warning message turns off when the low tire pressure warning light turns off.

The low tire pressure warning light remains illuminated until the tires are inflated to the recommended COLD tire pressure. The CHECK TIRE PRES warning message is displayed each time the ignition switch is placed in the ON position as long as the low tire pressure warning light remains illuminated. For more information see “Low tire pressure warning light” in the “Instruments and controls” section, “Tire Pressure Monitoring System (TPMS)” in the “Starting and driving” and “Wheels and tires” section in the “Maintenance and do-it-yourself” section of this Owner’s Manual.

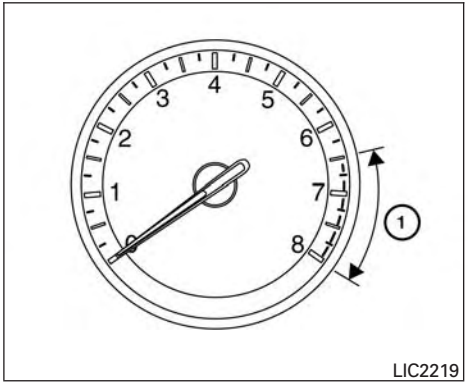

LIC2219

## TACHOMETER

The tachometer indicates engine speed in revolutions per minute (rpm). Do not rev engine into the red zone ①.

**⚠ CAUTION**

**When engine speed approaches the red zone, reduce engine speed. Operating the engine in the red zone may cause serious engine damage.**

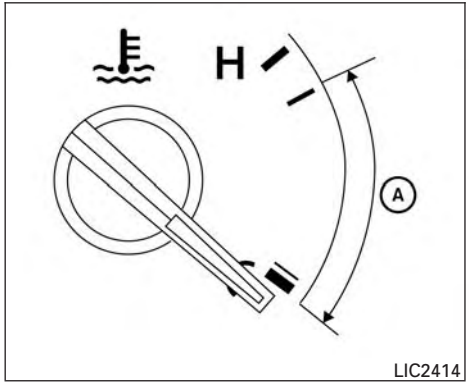


## ENGINE COOLANT TEMPERATURE GAUGE

**NOTE:**

**The ignition switch must be placed in the ON position for the gauge to give a reading.**

The gauge indicates the engine coolant temperature. The engine coolant temperature is within the normal range when the reading is within the zone Ⓐ shown in the illustration.

The engine coolant temperature varies with the outside air temperature and driving conditions.

**⚠ CAUTION**

**If the gauge indicates a coolant temperature near the hot (H) end of the normal range, reduce vehicle speed to decrease the temperature. If the gauge is over the normal range, stop the vehicle as soon as safely possible. If the engine is overheated, continued operation of the vehicle may seriously damage the engine. See "If your vehicle overheats" in the "In case of emergency" section for immediate action required**

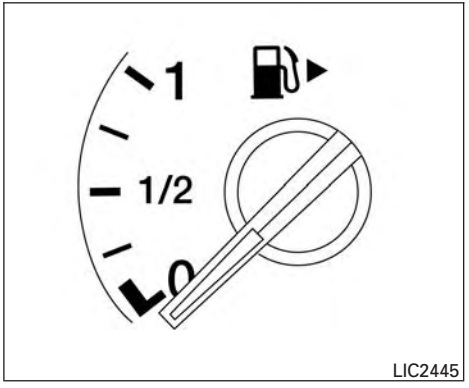


## FUEL GAUGE

**NOTE:**

**The ignition switch must be placed in the ON position for the gauge to give a reading.**

The gauge indicates the **approximate** fuel level in the tank.

The gauge may move slightly during braking, turning, acceleration, or going up or down hills.

The low fuel warning light comes on when the amount of fuel in the tank is getting low.

**Refill the fuel tank before the gauge registers 0 (Empty).**

The ⛽▶ indicates that the fuel-filler door is located on the passenger's side of the vehicle.

**⚠ CAUTION**

- **If the vehicle runs out of fuel, the Malfunction Indicator Light (MIL) may come on. Refuel as soon as possible. After a few driving trips. the light should turn off. If the light remains on after a few driving trips, have the vehicle inspected by a NISSAN dealer.**
- **For additional information, see "Malfunction Indicator Light (MIL)" in this section.**

## TRIP COMPUTER

When the ignition switch is placed in the ON position, the modes of the trip computer can be selected by pressing the button on the steering wheel. The following modes can be selected:

- Trip A
- Trip B
- ECO Pedal Indicator
- Instant fuel economy
- Average fuel economy
- Average speed
- Distance to empty
- Trip computer reset

### Trip A

Measures the distance of one specific trip.

### Trip B

Measures the distance of a second specific trip.

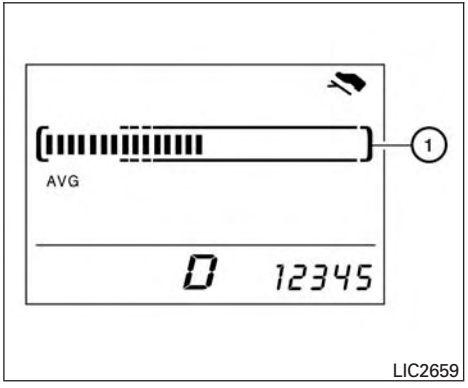


### ECO Pedal Indicator Display

Use the ECO Pedal Indicator① for improving fuel economy.

When the ECO Pedal Indicator bar is in the green range, it displays the recommended accelerator pedal position to optimize fuel economy.

If the ECO Pedal Indicator bar is out of green range, the vehicle will not provide optimized fuel economy.

**NOTE:**

**The ECO Pedal Indicator's bar is not displayed when the cruise control is in operation.**

### Instant fuel economy

The instant fuel economy mode shows the instant fuel economy. The display updates instantly when driving.

### Average fuel economy

The average fuel economy mode shows the average fuel economy since the last reset. Resetting is done by pressing the button on the steering wheel for more than approximately 1 second. The display is updated every 30 seconds. At about the first 1/3 mile (500 m) after a reset, the display shows (----).

### Average speed

The average speed mode shows the average vehicle speed since last reset. Resetting is done by pressing the button on the steering wheel for more than approximately 1 second. The display is updated every 30 seconds. The first 30 seconds after a reset, the display shows (----).

### Distance to empty

The distance to empty (dte) mode provides you with an estimation of the distance that can be driven before refueling. The dte is constantly being calculated, based on the amount of fuel in the fuel tank and the actual fuel economy.

The display is updated every 30 seconds.

**NOTE:**

**When driving uphill or rounding curves, the fuel in the tank shifts, which may momentarily change the display.**

### Trip computer reset

To reset Trip A, Trip B, AVG/mpg, or AVG/mph, go to the desired mode on the trip computer and hold the button on the steering wheel for more than 3 seconds.

## OUTSIDE TEMPERATURE DISPLAY

The outside temperature function provides a display of the outside temperature when the ignition switch is placed in the ON position.

The display of positive temperatures is unsigned (blank), negative temperatures are prefixed with a minus sign.

This unit measures terrestrial magnetism and indicates heading direction of vehicle.

With the ignition switch in the ON position, press the button as described in the chart below to activate various features of the automatic anti-glare rearview mirror.

| Press and hold the button for about: | Feature: (Press button again for about 1 second to change settings) |
|---|---|
| 0 – 3 seconds | Compass display toggles on/off |
| 3 – 6 seconds | Automatic anti-glare/indicator light toggles on/off |
| 6 – 9 seconds | Compass zone can be changed to correct false compass readings |
| 9 – 12 seconds | Compass enters calibration mode |

For more information about the automatic anti-glare feature, refer to "Automatic anti-glare rearview mirror" in the "Pre-driving checks and adjustments" section.

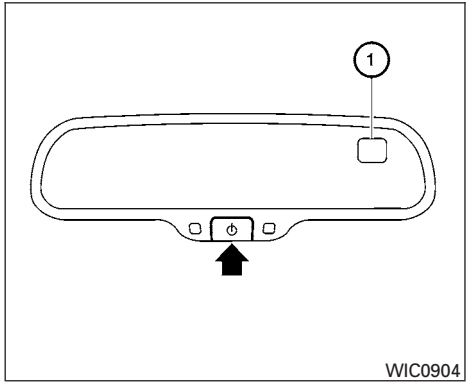


## COMPASS DISPLAY

Push the ⏻ button for about 1 second when the ignition switch is placed in the ON position to toggle the compass direction display ① on or off. The display will indicate the direction that the vehicle is heading.

N: North
E: East
S: South
W: West

If the display reads “C”, calibrate the compass by driving the vehicle in three complete circles at less than 5 MPH (8 km/h).

You can also calibrate the compass by driving your vehicle on your everyday route. The compass will be calibrated once it has tracked three complete circles.

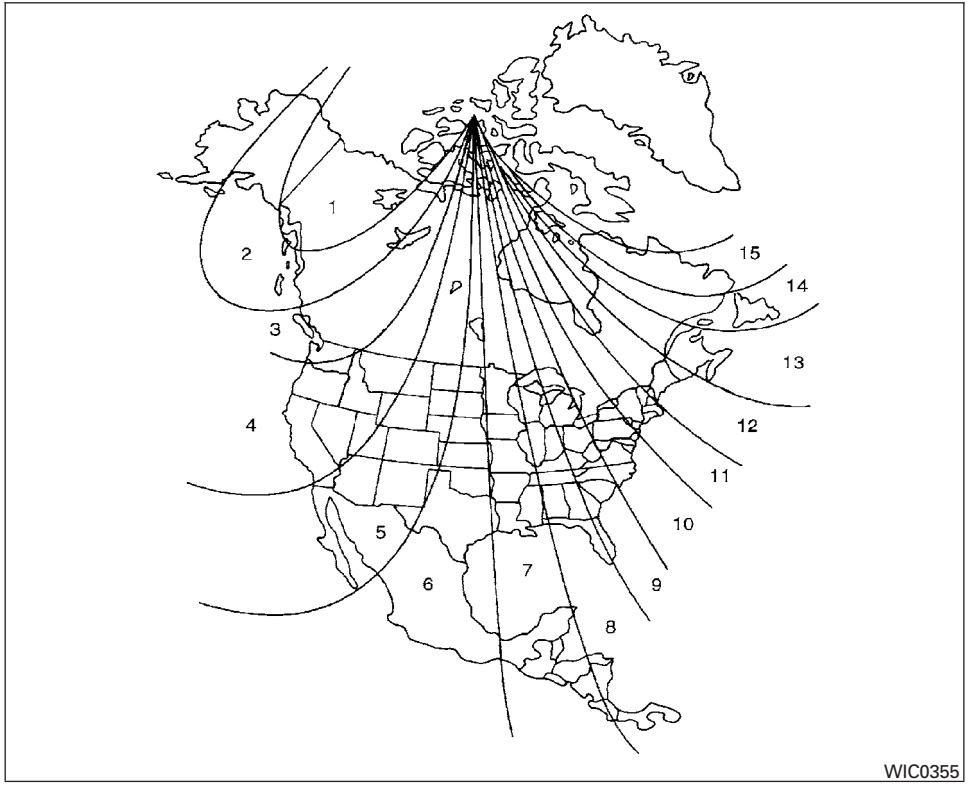


## Zone variation change procedure

The difference between magnetic north and geographical north is known as variance. In some areas, this difference can sometimes be great enough to cause false compass readings. Follow these instructions to set the variance for your particular location if this happens:

1. Press and hold the ⏻ button for about 11 seconds. The current zone number will appear in the display. Release the button.
2. Find your current location on the zone map. Refer to the illustration.
3. Press the ⏻ button repeatedly to toggle through the zone numbers until the desired number appears in the display. Once you have selected a zone number, the display will show a compass direction within a few seconds.

**Inaccurate compass direction:**

The compass display is equipped with automatic correction function. If the correct direction is not shown, follow this procedure.

1. With the display turned on, press and hold the ⏻ button for about 13 seconds. The “C” icon in the compass display will illuminate.

2. Calibrate the compass by driving the vehicle in three complete circles at a maximum speed of 5 MPH (8 km/h).
3. After completing the circles, the display should return to normal.

**⚠ CAUTION**

- **Do not install a ski rack, antenna, etc., which are attached to the vehicle by means of a magnet. They affect the operation of the compass.**
- **When cleaning the mirror, use a paper towel or similar material dampened with glass cleaner. Do not spray glass cleaner directly on the mirror as it may cause the liquid cleaner to enter the mirror housing.**

## WARNING/INDICATOR LIGHTS AND AUDIBLE REMINDERS

| | | |
|---|---|---|
| ABS or (ABS) Anti-lock Braking System (ABS) warning light | PS Power steering warning light | High beam indicator light (blue) |
| BRAKE or Brake warning light | P SHIFT P position selecting warning light (CVT models) (if so equipped) | Malfunction Indicator Light (MIL) |
| Charge warning light | Seat belt warning light | O/D OFF Overdrive off indicator light (CVT models) |
| Door open warning light | Supplemental air bag warning light | Security indicator light |
| Engine oil pressure warning light | P Continuously Variable Transmission (CVT) position indicator light (CVT models) | Side light and headlight indicator light (green) |
| Low fuel warning light | CRUISE Cruise main switch indicator light (if so equipped) | Slip indicator light |
| Low tire pressure warning light | ECO ECO mode indicator light | SPORT SPORT mode indicator light |
| Low windshield-washer fluid warning light | Engine start operation indicator light (if so equipped) | Turn signal/hazard indicator lights |
| LOCK NISSAN Intelligent Key® lock warning light (M/T models) (if so equipped) | Front fog light indicator light (if so equipped) | OFF Vehicle Dynamic Control (VDC) off indicator light |
| KEY NISSAN Intelligent Key® warning light (if so equipped) | OFF 2 Front passenger air bag status light | |

## CHECKING BULBS

With all doors closed, apply the parking brake and place the ignition switch in the ON position without starting the engine. The following lights will come on:

BRAKE or , , , , , PS

If equipped, the following lights come on briefly and then go off:

ABS or , KEY , P SHIFT ,

**If any light fails to come on, it may indicate an open circuit in the electrical system. Have the system repaired promptly.**

## WARNING LIGHTS

ABS or Anti-lock Braking System (ABS) warning light

When the ignition switch is placed in the ON position, the Anti-lock Braking System (ABS) warning light illuminates and then turns off. This indicates the ABS is operational.

If the ABS warning light illuminates while the engine is running or while driving, it may indicate the ABS is not functioning properly. Have the system checked by a NISSAN dealer.

If an ABS malfunction occurs, the anti-lock function is turned off. The brake system then operates normally, but without anti-lock assistance. See “Brake system” in the “Starting and driving” section.

BRAKE or Brake warning light

This light functions for both the parking brake and the foot brake systems.

### Parking brake indicator

When the ignition switch is placed in the ON position, the light comes on when the parking brake is applied.

### Low brake fluid warning light

When the ignition switch is placed in the ON position, the light warns of a low brake fluid level. If the light comes on while the engine is running with the parking brake not applied, stop the vehicle and perform the following:

1. Check the brake fluid level. Add brake fluid as necessary. See “Maintenance and do-it-yourself” section of this manual.
2. If the brake fluid level is correct, have the warning system checked by a NISSAN dealer.

**⚠ WARNING**

- **Your brake system may not be working properly if the warning light is on. Driving could be dangerous. If you judge it to be safe, drive carefully to the nearest service station for repairs. Otherwise, have your vehicle towed because driving it could be dangerous.**
- **Pressing the brake pedal with the engine stopped and/or a low brake fluid level may increase your stopping distance and braking will require greater pedal effort as well as pedal travel.**
- **If the brake fluid level is below the MINIMUM or MIN mark on the brake fluid reservoir, do not drive until the brake system has been checked at a NISSAN dealer.**

### Anti-lock Braking System (ABS) warning indicator

When the parking brake is released and the brake fluid level is sufficient, if both the brake warning light and the Anti-lock Braking System (ABS) warning light illuminate, it may indicate the ABS is not functioning properly. Have the brake system checked, and if necessary, repaired by a NISSAN dealer promptly. Avoid high-speed driving and abrupt braking. See “Anti-lock Braking System (ABS) warning light” in this section.

## Charge warning light

If this light comes on while the engine is running, it may indicate the charging system is not functioning properly. Turn the engine off and check the generator belt. If the belt is loose, broken, missing, or if the light remains on, see a NISSAN dealer immediately.

**CAUTION**

**Do not continue driving if the generator belt is loose, broken or missing.**

## Door open warning light

This light comes on when any of the doors are not closed securely while the ignition switch is placed in the ON position.

## Engine oil pressure warning light

This light warns of low engine oil pressure. If the light flickers or comes on during normal driving, pull off the road in a safe area, stop the engine **immediately** and call a NISSAN dealer or other authorized repair shop.

**The engine oil pressure warning light is not designed to indicate a low oil level.** Use the dipstick to check the oil level. See “Engine oil” in the “Maintenance and do-it-yourself” section of this manual.

**CAUTION**

**Running the engine with the engine oil pressure warning light on could cause serious damage to the engine almost immediately. Such damage is not covered by warranty. Turn off the engine as soon as it is safe to do so.**

## Low fuel warning light

This light comes on when the fuel level in the fuel tank is getting low. Refuel as soon as it is convenient, preferably before the fuel gauge reaches 0 (Empty). **There will be a small reserve of fuel in the tank when the fuel gauge reaches 0 (Empty).**

## Low tire pressure warning light

Your vehicle is equipped with a Tire Pressure Monitoring System (TPMS) that monitors the tire pressure of all tires except the spare.

The low tire pressure warning light warns of low tire pressure or indicates that the TPMS is not functioning properly.

After the ignition switch is placed in the ON position, this light illuminates for about 1 second and turns off.

**Low tire pressure warning:**

**If the vehicle is being driven with low tire pressure, the warning light will illuminate. A CHECK TIRE PRESSURE warning message is also displayed in the odometer.**

**When the low tire pressure warning light illuminates, you should stop and adjust the tire pressure of all 4 tires to the recommended COLD tire pressure shown on the Tire and Loading Information label located in the driver’s door opening. The low tire pressure warning light does not automatically turn off when the tire pressure is adjusted. After the tire is inflated to the recommended pressure, the vehicle must be driven at speeds above 16 MPH (25 km/h) to activate the TPMS and turn off the low tire pressure warning light. Use a tire pressure gauge to check the tire pressure.**

The low tire pressure warning light remains illuminated until the tires are inflated to the recommended COLD tire pressure. The CHECK TIRE PRESSURE warning message is displayed each time the ignition switch is placed in the ON position as long as the low tire pressure warning light remains illuminated.

For additional information, see “Check tire pressure warning message” in the “Instruments and controls” section and “Tire Pressure Monitoring System (TPMS)” in the “Starting and driving” section and in the “In case of emergency” section.

**TPMS malfunction:**

If the TPMS is not functioning properly, the low tire pressure warning light will flash for approximately 1 minute when the ignition switch is placed in the ON position. The light will remain on after the 1 minute. Have the system checked by a NISSAN dealer. The CHECK TIRE PRESSURE warning message is not displayed if the low tire pressure warning light illuminates to indicate a TPMS malfunction.

For additional information, see “Tire Pressure Monitoring System (TPMS)” in the “Starting and driving” section and “Tire pressure” in the “Maintenance and do-it-yourself” section.

**⚠ WARNING**

- **Radio waves could adversely affect electric medical equipment. Those who use a pacemaker should contact the electric medical equipment manufacturer for the possible influences before use.**
- **If the light does not illuminate with the ignition switch placed in the ON position, have the vehicle checked by a NISSAN dealer as soon as possible.**
- **If the light illuminates while driving, avoid sudden steering maneuvers or abrupt braking, reduce vehicle speed, pull off the road to a safe location and stop the vehicle as soon as possible. Driving with under-inflated tires may permanently damage the tires and increase the likelihood of tire failure. Serious vehicle damage could occur and may lead to an accident and could result in serious personal injury. Check the tire pressure for all four tires. Adjust the tire pressure to the recommended COLD tire pressure shown on the Tire and Loading Information label located in the driver’s door opening to turn the low tire pressure warning light OFF. If the light still comes on while driving after adjusting the tire pressure, a tire may be flat. If you have a flat tire, replace it with a spare tire as soon as possible.**
- **When a spare tire is mounted or a wheel is replaced the TPMS will not function and the low tire pressure warning light will flash for approximately 1 minute. The light will remain on after 1 minute. Contact your NISSAN dealer as soon as possible for tire replacement and/or system resetting.**
- **Replacing tires with those not originally specified by NISSAN could affect the proper operation of the TPMS.**

**⚠ CAUTION**

- **The TPMS is not a substitute for the regular tire pressure check. Be sure to check the tire pressure regularly.**
- **If the vehicle is being driven at speeds of less than 16 MPH (25 km/h), the TPMS may not operate correctly.**
- **Be sure to install the specified size of tires to the 4 wheels correctly.**

## Low windshield-washer fluid warning light

This light comes on when the windshield-washer fluid is at a low level. Add windshield-washer fluid as necessary. See “Windshield-washer fluid” in the “Maintenance and do-it-yourself” section of this manual.

## NISSAN Intelligent Key® lock warning light (M/T models) (if so equipped)

When the ignition switch is left in the OFF position instead of completely placing it to the LOCK position, the Intelligent Key lock warning light blinks red and the Intelligent Key room buzzer will sound. The light will keep blinking until the ignition switch is placed in the LOCK or ACC position.

If the Intelligent Key lock warning light blinks and the buzzer sounds, press the PUSH release button next to ignition knob, then turn the ignition knob to either the LOCK or ACC position.

See “NISSAN Intelligent Key®” in the “Pre-driving checks and adjustments” section.

## NISSAN Intelligent Key® warning light (if so equipped)

The Intelligent Key warning light illuminates green when the ignition switch can be turned. The Intelligent Key warning light illuminates red when the ignition switch cannot be turned.

The Intelligent Key warning light blinks red if the Intelligent Key is taken outside of the vehicle while the ignition switch is placed in the ACC or ON position.

- If the Intelligent Key warning light blinks, make sure of the location of the Intelligent Key as soon as possible. The Intelligent Key should be carried by the driver while operating the vehicle.
- The Intelligent Key warning light turns off about 10 seconds after the Intelligent Key is brought inside the vehicle.

The Intelligent Key warning light blinks green indicating that the Intelligent Key battery is almost discharged.

See “NISSAN Intelligent Key®” in the “Pre-driving checks and adjustments” section.

## Power steering warning light

**WARNING**

- **If the engine is not running or is turned off while driving, the power assist for the steering will not work. Steering will be harder to operate.**
- **When the power steering warning light illuminates with the engine running, there will be no power assist for the steering. You will still have control of the vehicle but the steering will be harder to operate. Have the power steering system checked by a NISSAN dealer.**

When the ignition switch is placed in the ON position, the power steering warning light illuminates. After starting the engine, the power steering warning light turns off. This indicates the power steering system is operational.

If the power steering warning light illuminates while the engine is running, it may indicate the power steering system is not functioning properly and may need servicing. Have the power steering system checked by a NISSAN dealer.

When the power steering warning light illuminates with the engine running, there will be no power assist for the steering but you will still have

control of the vehicle. At this time, greater steering effort is required to operate the steering wheel, especially in sharp turns and at low speeds.

See “Power steering” in the “Starting and driving” section.

### P position selecting warning light (CVT models) (if so equipped)

The light blinks red and the warning buzzer sounds if you are outside of the vehicle with the Intelligent Key and the engine is off, but the shift lever is not in the P (Park) position.

When the warning light blinks, place the ignition switch in the ON position, move the shift lever to the P (Park) position, then place the ignition switch in the LOCK position.

### Seat belt warning light and chime

The light and chime remind you to fasten your seat belts. The light illuminates whenever the ignition switch is placed in the ON or START position and remains illuminated until the driver’s seat belt is fastened. At the same time, the chime sounds for about 6 seconds unless the driver’s seat belt is securely fastened.

The seat belt warning light may also illuminate if the front passenger’s seat belt is not fastened when the front passenger’s seat is occupied . For 7 seconds after the ignition switch is placed in the ON position, the system does not activate the warning light for the front passenger.

Refer to “Seat belts” in the “Safety—Seats, seat belts and supplemental restraint system” section for precautions on seat belt usage.

### Supplemental air bag warning light

When the ignition switch is placed in the ON or START position, the supplemental air bag warning light illuminates for about 7 seconds and then turns off. This means the system is operational.

If any of the following conditions occur, the front air bag, side air bag, curtain air bag, and pretensioner seat belt systems need servicing and your vehicle must be taken to a NISSAN dealer:

- The supplemental air bag warning light remains on after approximately 7 seconds.
- The supplemental air bag warning light flashes intermittently.
- The supplemental air bag warning light does not come on at all.

Unless checked and repaired, the supplemental restraint system (air bag system) and/or the pretensioners may not function properly. For additional details see “Supplemental restraint system” in the “Safety—Seats, seat belts and supplemental restraint system” section of this manual.

**⚠ WARNING**

**If the supplemental air bag warning light is on, it could mean that the front air bag, side air bag, curtain air bag systems and/or pretensioner systems will not operate in an accident. To help avoid injury to yourself or others, have your vehicle checked by a NISSAN dealer as soon as possible.**

## INDICATOR LIGHTS

### Continuously Variable Transmission (CVT) position indicator light (if so equipped)

When the ignition switch is placed in the ON position, this indicator light shows the transmission shift lever position. See “Driving the vehicle” in the “Starting and driving” section of this manual.

## CRUISE Cruise main switch indicator light (if so equipped)

The light comes on when the cruise control main switch is pushed. The light goes out when the main switch is pushed again. When the cruise main switch indicator light comes on, the cruise control system is operational.

## ECO mode indicator light

This light comes on when the ECO mode has been selected. See “ECO mode” in the “Starting and driving” section for the use of the ECO mode switch.

## Engine start operation indicator (if so equipped)

For vehicles equipped with push button ignition this indicator illuminates when the ignition switch is in the LOCK, OFF, ACC or ON position.

This indicator means that the engine will start by pushing the push-button ignition switch with the brake pedal and clutch pedal (if so equipped) depressed.

## Front fog light indicator light (if so equipped)

The front fog light indicator light illuminates when the front fog lights are ON. See “Fog light switch” in this section.

## Front passenger air bag status light

The front passenger air bag status light will be lit and the passenger front air bag will be OFF depending on how the front passenger seat is being used.

For front passenger air bag status light operation, see “Front passenger air bag and status light” in the “Safety — Seats, seat belts and supplemental restraint system” section of this manual.

## High beam indicator light (blue)

This blue light comes on when the headlight high beams are on and goes out when the low beams are selected.

The high beam indicator light also comes on when the passing signal is activated.

## Malfunction Indicator Light (MIL)

If this indicator light comes on steady or blinks while the engine is running, it may indicate a potential emission control malfunction.

The Malfunction Indicator Light may also come on steady if the fuel-filler cap is loose or missing, or if the vehicle runs out of fuel. Check to make sure the fuel-filler cap is installed and closed tightly, and that the vehicle has at least 3 gallons (11.4 liters) of fuel in the fuel tank.

After a few driving trips, the light should turn off if no other potential emission control system malfunction exists.

If this indicator light comes on steady for 20 seconds and then blinks for 10 seconds when the engine is not running, it indicates that the vehicle is not ready for an emission control system inspection/maintenance test. See “Readiness for inspection/maintenance (I/M) test” in the “Technical and consumer information” section of this manual.

**Operation**

The Malfunction Indicator Light will come on in one of two ways:

- Malfunction Indicator Light on steady — An emission control system malfunction has been detected. Check the fuel-filler cap if the LOOSE FUEL CAP warning appears in the vehicle information display. If the fuel-filler cap is loose or missing, tighten or install the cap and continue to drive the vehicle. The light should turn off after a few driving trips. If the light does not turn off after a few driving trips, have the vehicle inspected by a NISSAN dealer. You do not need to have your vehicle towed to the dealer.
- Malfunction Indicator Light blinking — An engine misfire has been detected which may damage the emission control system. To reduce or avoid emission control system damage:
  - do not drive at speeds above 45 MPH (72 km/h).
  - avoid hard acceleration or deceleration.
  - avoid steep uphill grades.
  - if possible, reduce the amount of cargo being hauled or towed.

The Malfunction Indicator Light may stop blinking and come on steady. Have the vehicle inspected by a NISSAN dealer. You do not need to have your vehicle towed to the dealer.

**⚠CAUTION**

**Continued vehicle operation without having the emission control system checked and repaired as necessary could lead to poor driveability, reduced fuel economy, and possible damage to the emission control system.**

## Overdrive OFF indicator light (CVT models) (if so equipped)

The overdrive OFF indicator light illuminates when the overdrive off mode is selected.

For additional information, see “Continuously Variable Transmission (CVT)” in the “Starting and driving” section of this manual.

## Security indicator light

For vehicles without Intelligent Key: This light blinks whenever the ignition switch is placed in the LOCK, OFF or ACC position.

For vehicles with Intelligent Key: This light blinks when the ignition switch is placed in the LOCK position with the key removed from the ignition switch.

The blinking security indicator light indicates that the security systems equipped on the vehicle are operational.

For additional information, see “Security systems” in this section.

## Side light and headlight indicator light (green)

The side light and headlight indicator light illuminates when the side light or headlight position is selected. See “Headlight and turn signal switch” in this section for further details.

## Slip indicator light

This indicator will blink when the Vehicle Dynamic Control (VDC) system or the traction control system is operating, thus alerting that the vehicle is nearing its traction limits. The road surface may be slippery.

## SPORT mode indicator light

The SPORT mode indicator light illuminates when the SPORT mode is turned ON. See “Sport mode” in the “Starting and driving” section for the use of the SPORT mode switch.

## Turn signal/hazard indicator lights

The appropriate light flashes when the turn signal switch is activated.

Both lights flash when the hazard switch is turned on.

## Vehicle Dynamic Control (VDC) off indicator light

This indicator light comes on when the Vehicle Dynamic Control off switch is pushed to OFF. This indicates the Vehicle Dynamic Control has been turned off.

Push the Vehicle Dynamic Control off switch again or restart the engine and the system will operate normally. See “Vehicle Dynamic Control (VDC) system” in the “Starting and driving” section of this manual.

The Vehicle Dynamic Control light also comes on when you place the ignition switch in the ON position. The light will turn off after about 2 seconds if the system is operational. If the light stays on or comes on along with the indicator light while you are driving, have the Vehicle Dynamic Control system checked by a NISSAN dealer.

While the Vehicle Dynamic Control system is operating, you might feel slight vibration or hear the system working when starting the vehicle or accelerating, but this is normal.

# AUDIBLE REMINDERS

## Brake pad wear warning

The disc brake pads have audible wear warnings. When a disc brake pad requires replacement, it makes a high pitched scraping sound when the vehicle is in motion, whether or not the brake pedal is depressed. Have the brakes checked as soon as possible if the warning sound is heard.

## Key reminder chime

A chime sounds if the driver’s door is opened while the key is left in the ignition switch. Remove the key and take it with you when leaving the vehicle.

## Light reminder chime

With the ignition switch placed in the OFF position, a chime sounds when the driver’s door is opened if the headlights or parking lights are on.

Turn the headlight control switch off before leaving the vehicle.

## NISSAN Intelligent Key® door buzzer (if so equipped)

The Intelligent Key door buzzer sounds if any one of the following improper operations is found.

- The ignition switch is not returned to the LOCK position when locking the doors.
- The Intelligent Key is left inside the vehicle when locking the doors.
- The Intelligent Key is taken outside the vehicle when operating the vehicle.
- Any doors are not closed securely when locking the doors.

When the buzzer sounds, be sure to check both the vehicle and the Intelligent Key. See “NISSAN Intelligent Key®” in the “Pre-driving checks and adjustments” section.

## Parking brake reminder chime

A chime sounds if the parking brake is set and the vehicle is driven. The chime will stop if the parking brake is released or the vehicle speed returns to zero.

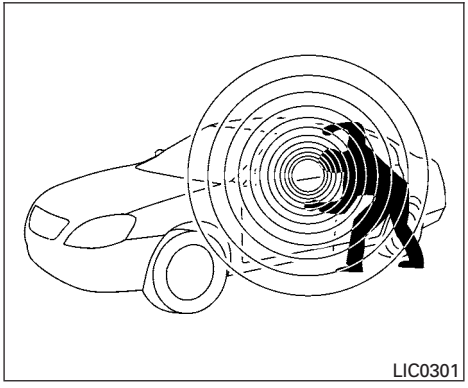


Your vehicle may have two types of security systems:

- Vehicle security system (if so equipped)
- NISSAN Vehicle Immobilizer System

## VEHICLE SECURITY SYSTEM (if so equipped)

The vehicle security system provides visual and audible alarm signals if someone opens the doors when the system is armed. It is not, however, a motion detection type system that activates when a vehicle is moved or when a vibration occurs.

The system helps detect vehicle theft but cannot prevent it, nor can it prevent the theft of interior or exterior vehicle components in all situations. Always secure your vehicle even if parking for a brief period. Never leave your keys in the ignition, and always lock the vehicle when unattended. Be aware of your surroundings, and park in secure, well-lit areas whenever possible.

Many devices offering additional protection, such as component locks, identification markers, and tracking systems, are available at auto supply stores and specialty shops. Your NISSAN dealer may also offer such equipment. Check with your insurance company to see if you may be eligible for discounts for various theft protection features.

### How to arm the vehicle security system

1. Close all windows. **(The system can be armed even if the windows are open.)**
2. Place the ignition switch in the LOCK position and remove the key.
3. Close all doors. Lock all doors. The doors can be locked with:
   - the power door lock switch (if the door is opened, locked and then closed).
   - the key — master or mechanical (Intelligent Key models).

- any request switch (Intelligent Key models).
- the keyfob or Intelligent Key.

Keyfob and Intelligent Key operation:

- Push the button. All doors lock. The hazard lights flash twice and the horn beeps once to indicate all doors are locked.
- When the button is pushed with all doors locked, the hazard lights flash twice and the horn beeps once as a reminder that the doors are already locked.

The horn may or may not beep. Refer to "Silencing the horn beep feature" in the "Pre-driving checks and adjustments" section in this manual.

4. Confirm that the indicator light comes on. The light stays on for about 30 seconds. The vehicle security system is now pre-armed. After about 30 seconds the vehicle security system automatically shifts into the armed phase. The light begins to flash once every 3 seconds. If, during the 30-second pre-arm time period, the driver's door is unlocked by the key, a request switch, the keyfob or Intelligent Key, or if the ignition switch is placed in the ACC or ON position, the system will not arm.

- **If the key is turned slowly when locking the driver's door, the system may not arm. Furthermore, if the key is turned beyond the vertical position toward the unlock position to remove the key, the system may be disarmed when the key is removed. If the indicator light fails to glow for a period of time, unlock the door once and lock it again.**
- **Even when the driver and/or passengers are in the vehicle, the system will arm with all doors closed and locked with the ignition switch placed in the OFF position.**

## Vehicle security system activation

The vehicle security system will give the following alarm:

- The headlights blink and the horn sounds intermittently.
- The alarm automatically turns off after a period of time. However, the alarm reactivates if the vehicle is tampered with again. The alarm can be shut off by unlocking the driver's door with the key, a request switch, by pressing the button on the keyfob or Intelligent Key or placing the ignition switch in the ON or ACC position.

The alarm is activated by:

- opening a door without using the key, a request switch, keyfob or Intelligent Key (even if the door is unlocked by using the inside lock knob or the power door lock switch).

## How to stop an activated alarm

The alarm stops only by unlocking the driver's door with the key, pressing the button on the keyfob or Intelligent Key, or by unlocking all doors with any request switch (Intelligent Key models) or placing the ignition switch in the ON or ACC position.

## NISSAN VEHICLE IMMOBILIZER SYSTEM (if so equipped)

The NISSAN Vehicle Immobilizer System will not allow the engine to start without the use of a registered key.

If the engine fails to start using a registered key (for example, when interference is caused by another registered key, an automated toll road device or automatic payment device on the key ring), restart the engine using the following procedures:

1. Leave the ignition switch placed in the ON position for approximately 5 seconds.
2. Place the ignition switch in the OFF or LOCK position and wait approximately 10 seconds.
3. Repeat steps 1 and 2.
4. Restart the engine while holding the device (which may have caused the interference) separate from the registered key.

If the no start condition re-occurs, NISSAN recommends placing the registered key on a separate key ring to avoid interference from other devices.

**FCC Notice:**

**For USA:**

**This device complies with part 15 of the FCC Rules. Operation is subject to the following two conditions: (1) This device may not cause harmful interference, and (2) this device must accept any interference received, including interference that may cause undesired operation.**

**NOTE:**

**Changes or modifications not expressly approved by the party responsible for compliance could void the user's authority to operate the equipment.**

**For Canada:**

**This device complies with RSS-210 of Industry Canada. Operation is subject to the following two conditions: (1) this device may not cause harmful interference, and (2) this device must accept any interference received, including interference that may cause undesired operation of the device.**

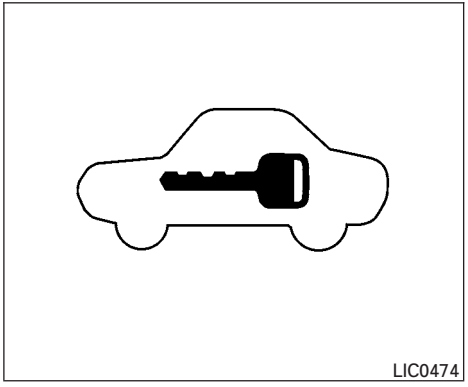


### Security indicator light

For vehicles without Intelligent Key: This light blinks whenever the ignition switch is placed in the LOCK, OFF or ACC position.

For vehicles with Intelligent Key: This light blinks when the ignition switch is placed in the LOCK position with the key removed from the ignition switch.

This function indicates the NISSAN Vehicle Immobilizer System is operational.

If the NISSAN Vehicle Immobilizer System is malfunctioning, the light will remain on while the ignition switch is placed in the ON position.

**If the light still remains on and/or the engine will not start, see a NISSAN dealer for NISSAN Vehicle Immobilizer System service as soon as possible. Please bring all registered keys that you have when visiting your NISSAN dealer for service.**

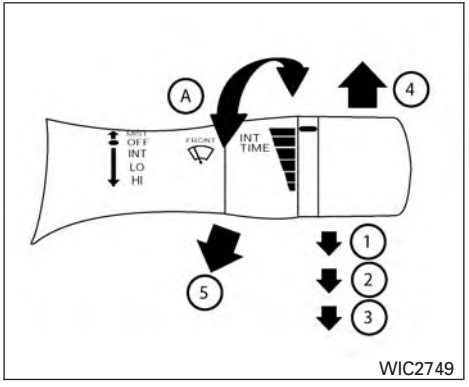


**Type A**

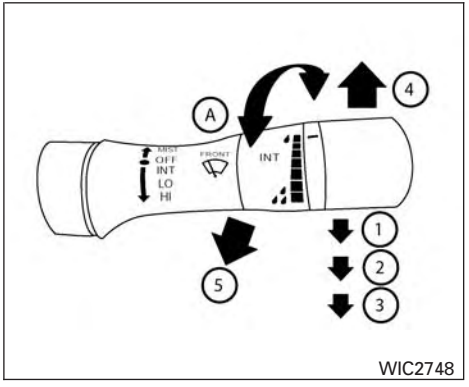


**Type B**

## SWITCH OPERATION

The windshield wiper and washer operates when the ignition switch is placed in the ON position.

Push the lever down to operate the wiper at the following speed:

① Intermittent (INT) — intermittent operation can be adjusted by turning the knob Ⓐ.

② Low (LO) — continuous low speed operation

③ High (HI) — continuous high speed operation

Push the lever up ④ to have one sweep operation (MIST) of the wiper.

Pull the lever toward you ⑤ to operate the washer. The wiper will also operate several times.

**⚠ WARNING**

**In freezing temperatures the washer solution may freeze on the windshield and obscure your vision which may lead to an accident. Warm the windshield with the defroster before you wash the windshield.**

**⚠ CAUTION**

- **Do not operate the washer continuously for more than 30 seconds.**
- **Do not operate the washer if the windshield-washer fluid reservoir is empty.**
- **Do not fill the windshield-washer fluid reservoir with windshield-washer fluid concentrates at full strength. Some methyl alcohol based windshield-washer fluid concentrates may permanently stain the grille if spilled while filling the windshield-washer fluid reservoir.**
- **Pre-mix windshield-washer fluid concentrates with water to the manufacturer's recommended levels before pouring the fluid into the windshield-washer fluid reservoir. Do not use the windshield-washer fluid reservoir to mix the windshield-washer fluid concentrate and water.**

## REAR WINDOW AND OUTSIDE MIRROR (if so equipped) DEFROSTER SWITCH

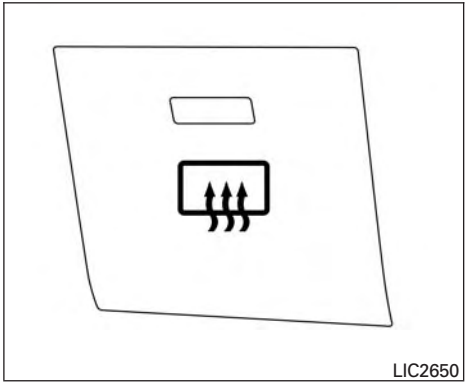


To defrost the rear window glass and outside mirror (if so equipped), start the engine and push the rear window defroster switch on. The rear window defroster indicator light on the switch comes on. Push the switch again to turn the defroster off.

The rear window defroster automatically turns off after approximately 15 minutes.

**⚠ CAUTION**

**When cleaning the inner side of the rear window, be careful not to scratch or damage the rear window defroster.**

## HEADLIGHT AND TURN SIGNAL SWITCH

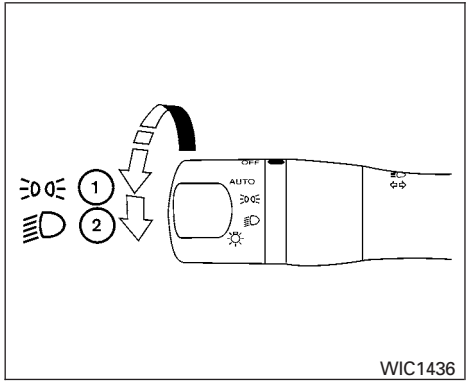


**Type A**

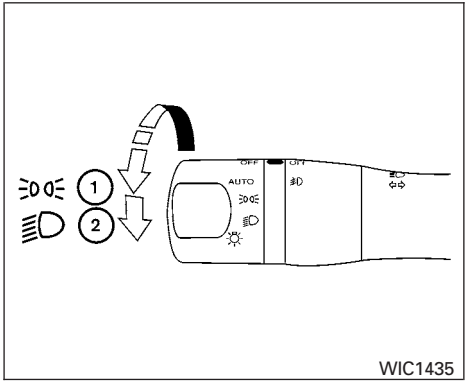


**Type B**

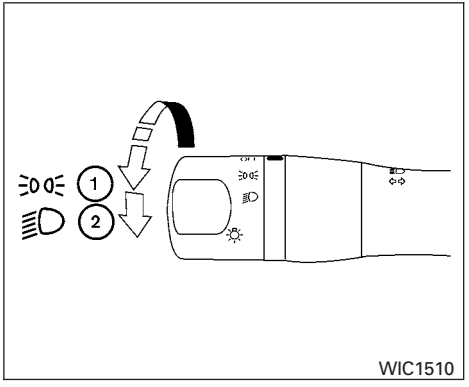


**Type C**

### HEADLIGHT CONTROL SWITCH

#### Lighting

① When turning the switch to the position, the front parking, tail, license plate and instrument panel lights come on.

② When turning the switch to the position, the headlights come on and all the other lights remain on.

Headlight Type B is equipped with front LED accent lights.

**⚠ CAUTION**

**Use the headlights with the engine running to avoid discharging the vehicle battery.**

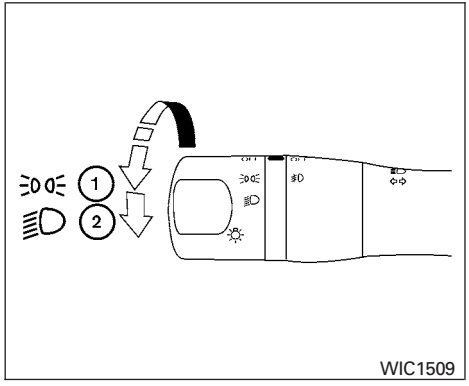


**Type D**

## Autolight system (if so equipped)

The autolight system allows the headlights to be set so they turn on and off automatically. The autolight system can:

- Turn on the headlights, front parking, tail, license plate and instrument panel lights automatically when it is dark.
- The autolight system will turn on if the windshield wipers make four continuous passes (USA only).
- Turn off all the lights when it is light.

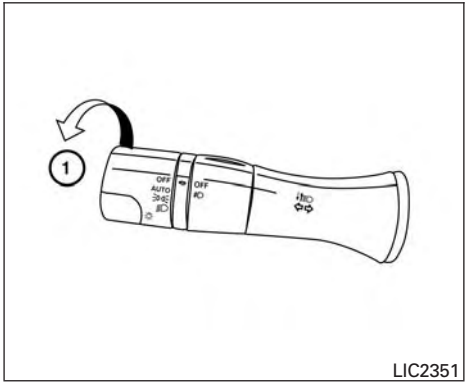


- Keep all the lights on a period of time after you turn the key to OFF and all doors are closed.

To turn on the autolight system:

1. Turn the headlight switch to the AUTO position ①.
2. Turn the ignition key to ON.
3. The autolight system automatically turns the headlights on and off.

Initially, if the ignition switch is turned OFF and a door is opened and left open, the headlights remain ON for a period of time. If another door is opened while the headlights are on, then the timer is reset.

To turn the autolight system off, turn the switch to the OFF, , or position.

**Be sure you do not put anything on top of the autolight sensor located in the top side of the instrument panel. The autolight sensor controls the autolight; if it is covered, the autolight sensor reacts as if it is dark out and the headlights will illuminate. If this occurs while parked with the engine off and the key in the ON position, your vehicle's battery could become discharged.**

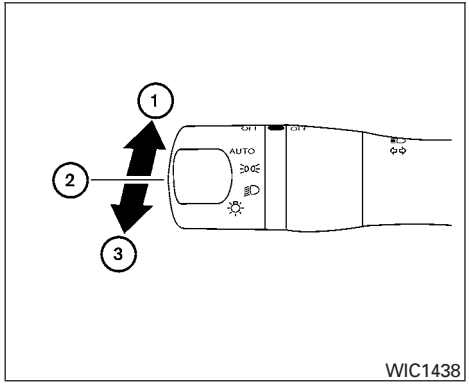


## Headlight beam select

① To select the high beam function, push the lever forward. The high beam lights come on and the light illuminates.

② Pull the lever back to select the low beam.

③ Pulling and releasing the lever flashes the headlight high beams on and off.

## Battery saver system

If the ignition switch is placed in the OFF position while the headlight switch is in the or position, the headlights will turn off after a period of time.

**CAUTION**

**Even though the battery saver feature automatically turns off the headlights after a period of time, you should turn the headlight switch to the OFF position when the engine is not running to avoid discharging the vehicle battery.**

## DAYTIME RUNNING LIGHT SYSTEM (Canada only)

The headlights automatically illuminate at a reduced intensity when the engine is started with the parking brake released. The daytime running lights operate with the headlight switch in the OFF position or in the position. Turn the headlight switch to the position for full illumination when driving at night.

If the parking brake is applied before the engine is started, the daytime running lights do not illuminate. The daytime running lights illuminate when the parking brake is released. The daytime running lights will remain on until the ignition switch is placed in the OFF position.

**WARNING**

**When the daytime running light system is active, tail lights on your vehicle are not on. It is necessary at dusk to turn on your headlights. Failure to do so could cause an accident injuring yourself and others.**

** Click HERE to see "Owner's Manual Supplement" beginning on page 2. **

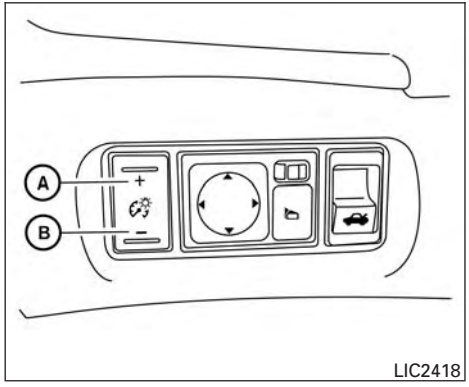

LIC2418

## INSTRUMENT BRIGHTNESS CONTROL

Push the "+" button Ⓐ to increase the brightness of instrument panel lights when driving at night.

Push the "-" button Ⓑ to decrease the brightness of instrument panel lights when driving at night.

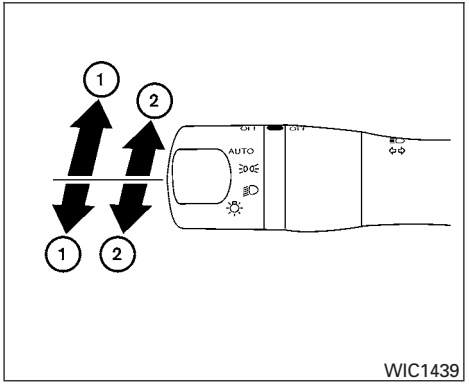

WIC1439

## TURN SIGNAL SWITCH

### Turn signal

① Move the lever up or down to signal the turning direction. When the turn is completed, the turn signal cancels automatically.

### Lane change signal

② To signal a lane change, move the lever up or down to the point where the indicator light begins to flash, but the lever does not latch.

The turn signal will flash three times automatically.

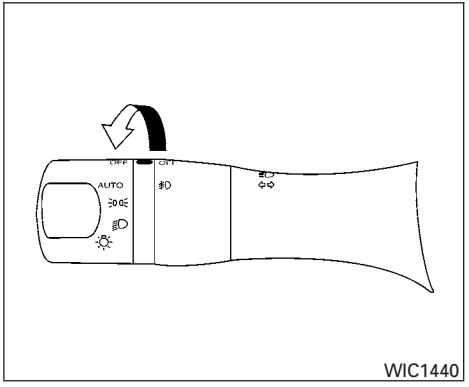

WIC1440

## FOG LIGHT SWITCH (if so equipped)

To turn the fog lights on, turn the headlight switch to the position, then turn the fog light switch to the position.

If the headlight switch is in the AUTO position and the fog light switch is moved to the ON position, both the fog lights and the headlights (including all other outside lights) will turn on.

To turn the fog lights off, turn the fog light switch to the OFF position.

Using the fog light switch in AUTO mode forces the headlights to come on, even if the light sensor has not activated them. The fog lights automatically turn off when the high beam headlights are selected.

## HORN

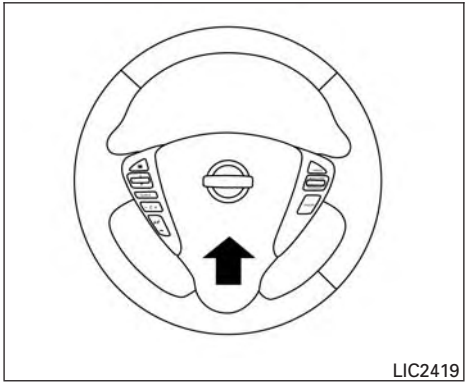


To sound the horn, push near the horn icon on the steering wheel.

**⚠ WARNING**

**Do not disassemble the horn. Doing so could affect proper operation of the supplemental front air bag system. Tampering with the supplemental front air bag system may result in serious personal injury.**

## HEATED SEATS (if so equipped)

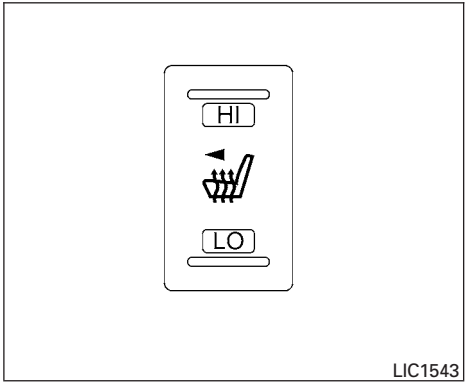


The front seats are warmed by built-in heaters.

1. Start the engine.
2. Push the LO or HI position of the switch, as desired. The indicator light in the switch will illuminate.

   The heater is controlled by a thermostat, automatically turning the heater on and off. The indicator light will remain on as long as the switch is on.
3. When the seat is warmed or before you leave the vehicle, be sure to turn the switch off.

**WARNING**

**Do not use or allow occupants to use the seat heater if you or the occupants cannot monitor elevated seat temperatures or have an inability to feel pain in body parts that contact the seat. Use of the seat heater by such people could result in serious injury.**

**CAUTION**

- **The battery could run down if the seat heater is operated while the engine is not running.**
- **Do not use the seat heater for extended periods or when no one is using the seat.**
- **Do not put anything on the seat which insulates heat, such as a blanket, cushion, seat cover, etc. Otherwise, the seat may become overheated.**
- **Do not place anything hard or heavy on the seat or pierce it with a pin or similar object. This may result in damage to the heater.**
- **Any liquid spilled on the heated seat should be removed immediately with a dry cloth.**
- **When cleaning the seat, never use gasoline, benzine, thinner, or any similar materials.**
- **If any malfunctions are found or the heated seat does not operate, turn the switch off and have the system checked by your NISSAN dealer.**

## VEHICLE DYNAMIC CONTROL (VDC) OFF SWITCH

LIC1548

The vehicle should be driven with the Vehicle Dynamic Control (VDC) system on for most driving conditions.

If the vehicle is stuck in mud or snow, the VDC system reduces the engine output to reduce wheel spin. The engine speed will be reduced even if the accelerator is depressed to the floor. If maximum engine power is needed to free a stuck vehicle, turn the VDC system off.

To turn off the VDC system, push the VDC OFF switch. The OFF indicator will come on.

Push the VDC OFF switch again or restart the engine to turn on the system. See “Vehicle Dynamic Control (VDC) system” in the “Starting and driving” section.

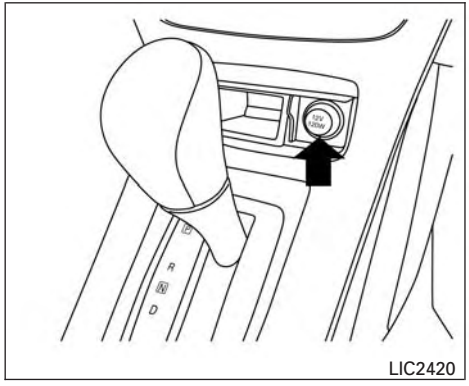


**Center Console**

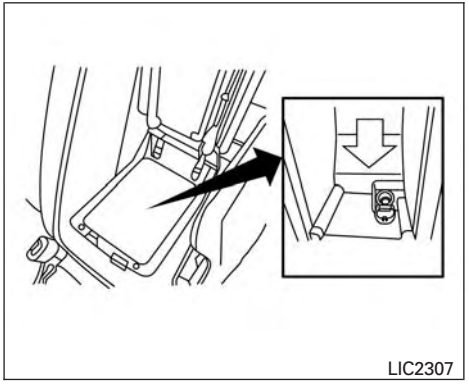


**Console Box (if so equipped)**

The power outlets are for powering electrical accessories such as cellular telephones. They are rated at 12 volt, 120W (10A) maximum.

The power outlets are powered only when the ignition switch is in the ACC or ON position.

**⚠ CAUTION**

- **The outlet and plug may be hot during or immediately after use.**
- **Only certain power outlets are designed for use with a cigarette lighter unit. Do not use any other power outlet for an accessory lighter. See your NISSAN dealer for additional information.**
- **Do not use with accessories that exceed a 12 volt, 120W (10A) power draw.**
- **Do not use double adapters or more than one electrical accessory.**
- **Use power outlets with the engine running to avoid discharging the vehicle battery.**
- **Avoid using power outlets when the air conditioner, headlights or rear window defroster is on.**
- **Before inserting or disconnecting a plug, be sure the electrical accessory being used is turned OFF.**
- **Push the plug in as far as it will go. If good contact is not made, the plug may overheat or the internal temperature fuse may open.**
- **When not in use, be sure to close the cap. Do not allow water or any other liquid to contact the outlet.**

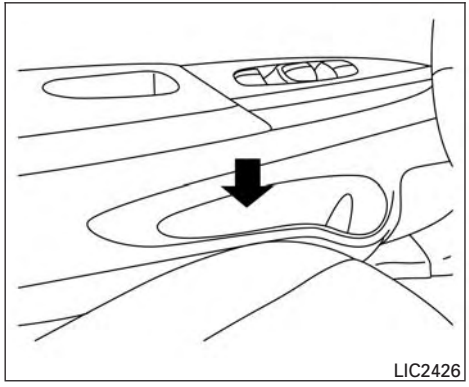


MAP POCKETS

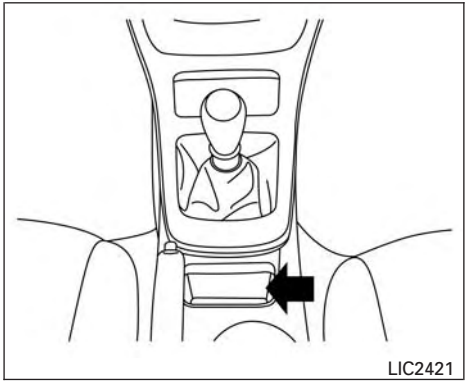


**Storage Tray**

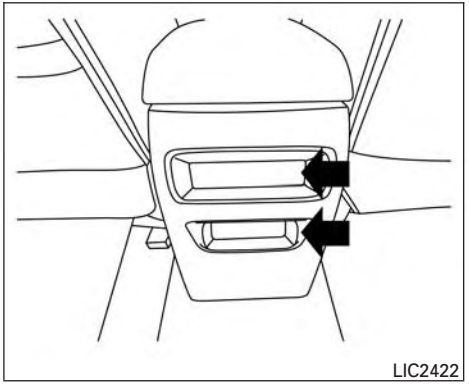


STORAGE TRAYS

**⚠ WARNING**

**Do not place sharp objects in the trays to help prevent injury in an accident or sudden stop.**

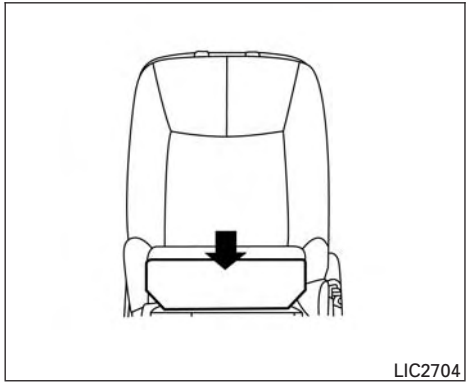


## STORAGE POUCH

A storage pouch is located on the front of the driver's and passenger's seats.

**⚠ WARNING**

- **Do not store angular, sharp, heavy objects or objects that cannot fully fit inside the pouch because they might increase the likelihood of an injury in a crash.**

  **To ensure proper operation of the passenger's advanced air bag system, please observe the following items:**

- **Do not place loads heavier than 0.55lb (0.25 kg) on the cushion storage pouch.**
- **Do not place a combined weight exceeding 2.2lb (1 kg) on the seatback, head restraint, seatback pocket and storage pouch at the same time.**

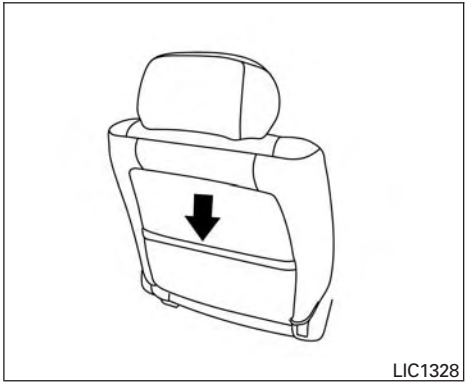


## SEATBACK POCKETS (if so equipped)

The seatback pockets are located on the back of the driver's and passenger's seats. The pockets can be used to store maps.

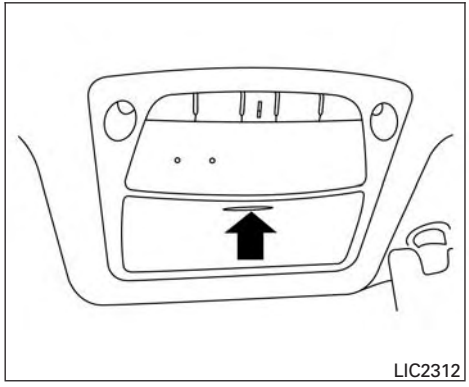


## SUNGLASSES HOLDER

To open the sunglasses holder, push and release.

Only store one pair of sunglasses in the holder.

**⚠ WARNING**

**Keep the sunglasses holder closed while driving to prevent an accident.**

**⚠ CAUTION**

- **Do not use for anything other than sunglasses.**
- **Do not leave sunglasses in the sunglasses holder while parking in direct sunlight. The heat may damage the sunglasses.**

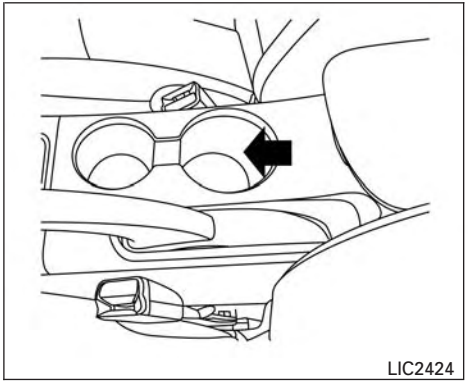


**Front**

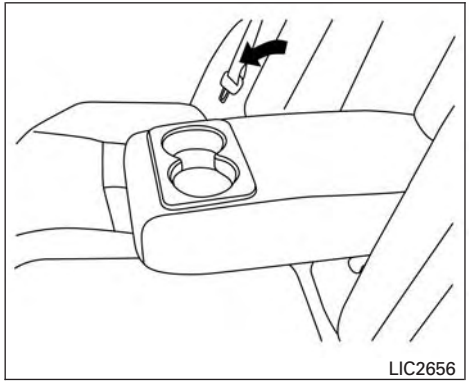


**Rear**

## CUP HOLDERS

**⚠ CAUTION**

- **Avoid abrupt starting and braking when the cup holder is being used to prevent spilling the drink. If the liquid is hot, it can scald you or your passenger.**
- **Use only soft cups in the cup holder. Hard objects can injure you in an accident.**

**⚠ CAUTION**

- **Do not use bottle holder for any other objects that could be thrown about in the vehicle and possibly injure people during sudden braking or an accident.**
- **Do not use bottle holder for open liquid containers.**

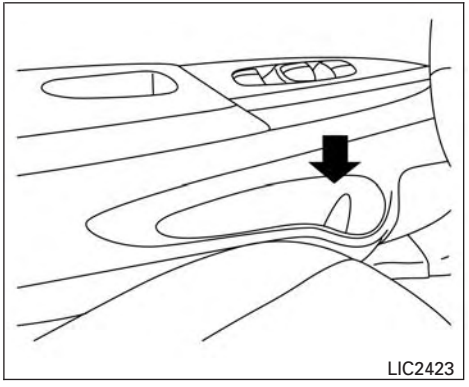


**Front**

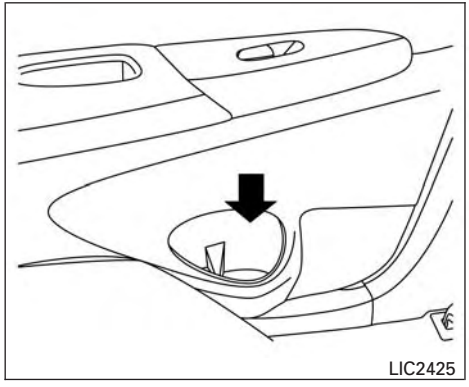


**Rear**

## Soft bottle holder

**⚠ CAUTION**

- **Do not use bottle holder for any other objects that could be thrown about in the vehicle and possibly injure people during sudden braking or an accident.**
- **Do not use bottle holder for open liquid containers.**

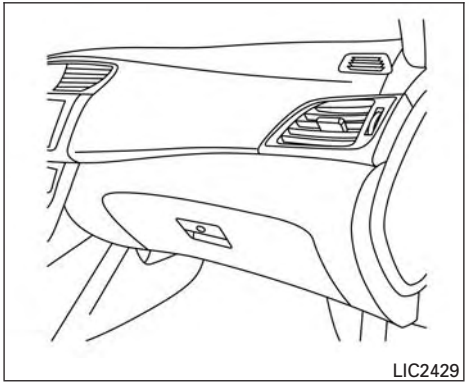


## GLOVE BOX

Open the glove box by pulling the handle.

**⚠ WARNING**

**Keep glove box lid closed while driving to help prevent injury in an accident or a sudden stop.**

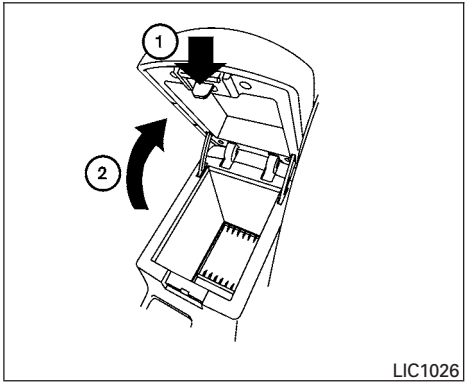


## CONSOLE BOX

To open the console box, press in on the lever ① and raise the lid ②.

To close, push the lid down until the lock latches.

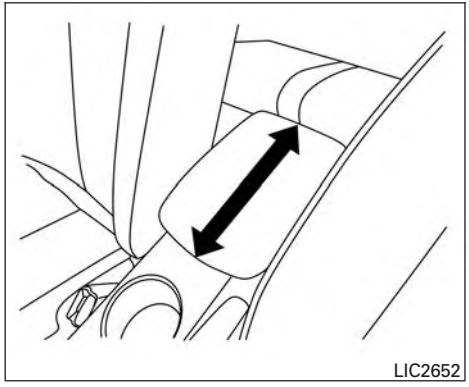


## SLIDE FRONT ARMREST (if so equipped)

To adjust the front armrest, take the leather cover and slide it to the front or rear.

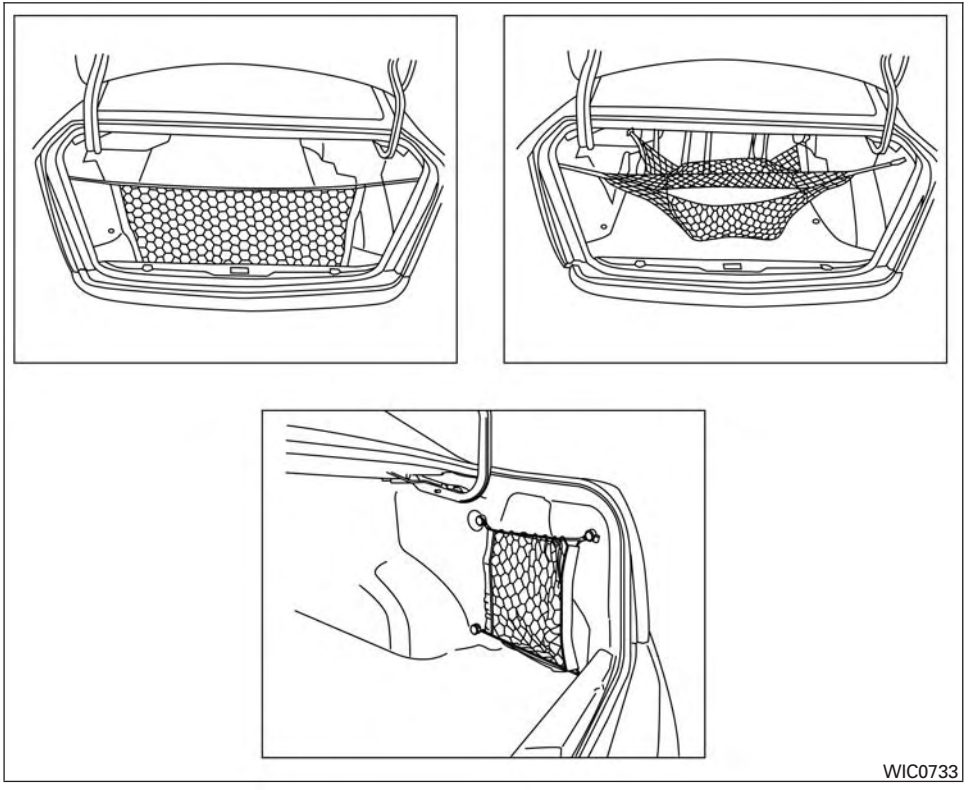

## CARGO NET (if so equipped)

**⚠ WARNING**

- **Properly secure all cargo with ropes or straps to help prevent it from sliding or shifting. In a sudden stop or collision, unsecured cargo could cause personal injury.**
- **Be sure to secure all four hooks into the retainers. The cargo restrained in the net must not exceed 30 lbs. (13.6 kg) or the net may not stay secured.**

The cargo net helps keep packages in the cargo area from moving around while the vehicle is in motion.

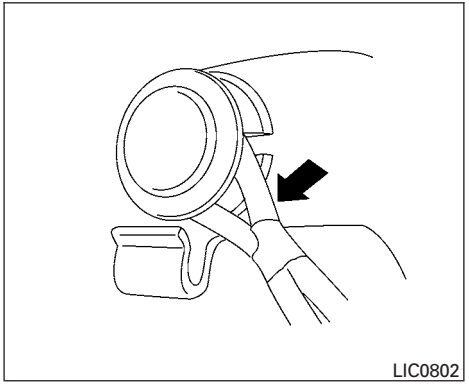


To install the cargo net, attach the net to the retainers.

To remove the cargo net, detach the net from the cargo net retainers.

## POWER WINDOWS

**⚠ WARNING**

- **Make sure that all passengers have their hands, etc. inside the vehicle while it is in motion and before closing the windows. Use the window lock switch to prevent unexpected use of the power windows.**
- **Do not leave children unattended inside the vehicle. They could unknowingly activate switches or controls and become trapped in a window. Unattended children could become involved in serious accidents.**

The power windows operate when the ignition switch is placed in the ON position, or for a period of time after the ignition switch is placed in the OFF position. If the driver's or passenger's door is opened during this period of time, the power to the windows is canceled.

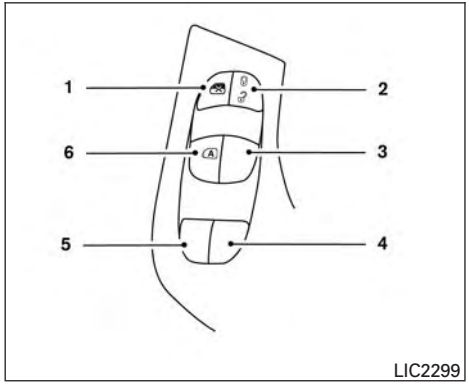


1. Window lock button
2. Power door lock switch
3. Front passenger side switch
4. Right rear passenger side switch
5. Left rear passenger side switch
6. Driver side automatic switch

## Driver's side power window switch

The driver's side control panel is equipped with switches to open or close all of the windows.

To open a window, push the switch to the first detent and continue to hold down until the desired window position is reached. To close a window, pull the switch to the first detent and continue to hold up until the desired window position is reached.

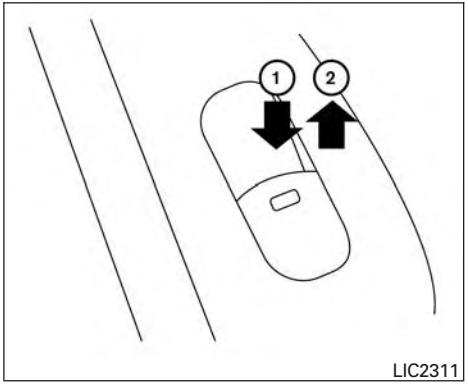


## Front passenger's power window switch

The passenger's window switch operates only the corresponding passenger's window. To open the window, push the switch to the first detent and continue to hold it down until the desired window position is reached ①. To close the window, pull the switch to the first detent and continue to hold it up until the desired window position is reached ②.

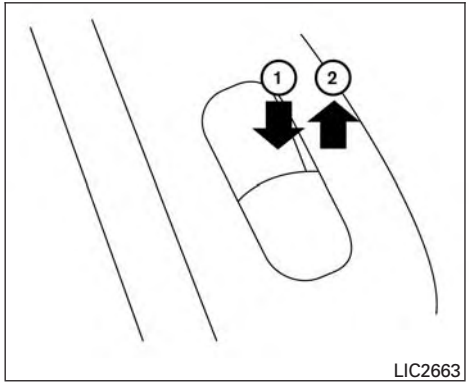


## Rear power window switch

The rear power window switches open or close only the corresponding windows. To open the window, push the switch and hold it down ①. To close the window, pull the switch up ②.

## Locking passengers' windows

When the window lock button is depressed, only the driver's side window can be opened or closed. Push it again to cancel the window lock function.

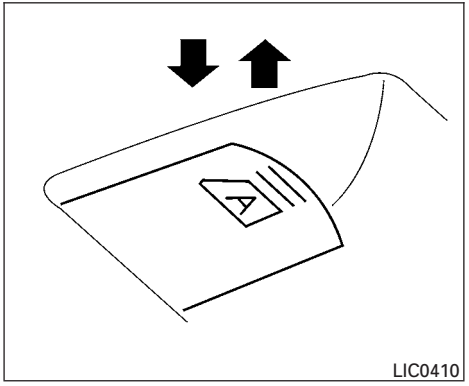


## Automatic operation

To fully open a window equipped with automatic operation, press the window switch down to the second detent and release it; it need not be held. The window automatically opens all the way. To stop the window, lift the switch up while the window is opening.

To fully close a window equipped with automatic operation, pull the switch up to the second detent and release it; it need not be held. The window automatically closes all the way. To stop the window, press the switch down while the window is closing.

## Auto-reverse function

The auto-reverse function can be activated when a window is closed by automatic operation.

**Depending on the environment or driving conditions, the auto-reverse function may be activated if an impact or load similar to something being caught in the window occurs.**

**⚠ WARNING**

**There are some small distances immediately before the closed position which cannot be detected. Make sure that all passengers have their hands, etc., inside the vehicle before closing the window.**

If the vehicle's battery is disconnected, replaced, or jump started, the power window auto-reverse function may not operate properly. If this occurs, please contact the dealer to re-initialize the power window auto-reverse system.

If the control unit detects something caught in a window equipped with automatic operation as it is closing, the window will be immediately lowered.

### When the automatic operation for the driver's power window switch does not operate

If the automatic operation for the driver's power window switch does not operate properly, perform the following procedure to initialize the power window switch.

1. Place the ignition switch in the ON position.
2. Press and hold the driver's window switch down until the window opens completely.
3. Release the switch.
4. Pull and hold the driver's window switch up to the second detent until the window glass has reached the full close position. **Continue to hold the window switch in the up position for 5 seconds after the window glass has reached the full close position.** (It is necessary for this entire step to be completed with one continuous pull of the window switch.)
5. Release the switch.

Initialization is now complete. The automatic operation for the driver's power window switch should now operate.

If the automatic operation does not operate properly after performing the above procedure, see a NISSAN dealer for assistance.

No initialization is required for all the other window switches.

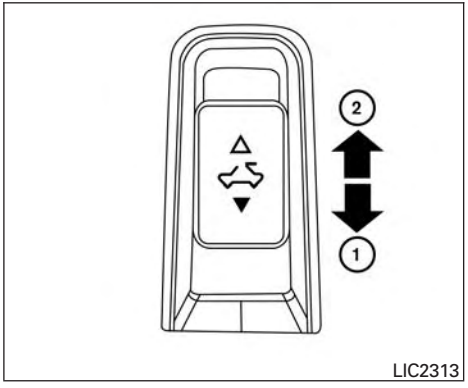


## POWER MOONROOF

The moonroof will only operate when the ignition switch is placed in the ON position. The power moonroof is operational for a period of time, even if the ignition switch is placed in the ACC or OFF position. If the driver's door or the front passenger's door is opened during this period of time, the power to the moonroof is canceled.

## Sliding the moonroof

To fully open or close the moonroof, push the switch to the open ② or close ① position and release it; it need not be held. The roof will automatically open or close all the way. To stop the roof, push the switch once more while it is opening or closing.

## Tilting the moonroof

To tilt up, first close the moonroof, then push the switch to the tilt up position ① and release it; it need not be held. To tilt down the moonroof, push the switch to the tilt down position ② .

## Resetting the moonroof switch

If the moonroof does not operate properly, perform the following procedure to initialize the moonroof operation system.

1. If the moonroof is open, close it fully by repeatedly pushing the moonroof switch to the close position ① to tilt the moonroof up.
2. Push and hold the switch to the close position ①.
3. Release the moonroof switch after the moonroof moves slightly up and down.
4. Push and hold the switch to the open position ② to fully tilt the moonroof down.
5. Check if the moonroof switch operates normally.

If the moonroof does not operate properly after performing the procedure above, have your vehicle checked by a NISSAN dealer.

## Auto-reverse function (when closing or tilting down the moonroof)

The auto-reverse function can be activated when the moonroof is closed or tilted down by automatic operation when the ignition switch is placed in the ON position or for a period of time after the ignition switch is placed in the OFF position.

**Depending on the environment or driving conditions, the auto-reverse function may be activated if an impact or load similar to something being caught in the moonroof occurs.**

**⚠ WARNING**

**There are some small distances immediately before the closed position which cannot be detected. Make sure that all passengers have their hands, etc., inside the vehicle before closing the moonroof.**

**When closing:**

If the control unit detects something caught in the moonroof as it moves to the front, the moonroof will immediately open backward.

**When tilting down:**

If the control unit detects something caught in the moonroof as it tilts down, the moonroof will immediately tilt up.

If the auto-reverse function malfunctions and repeats opening or tilting up the moonroof, keep pushing the tilt down switch within 5 seconds after it happens; the moonroof will fully close gradually. Make sure nothing is caught in the moonroof.

**⚠ WARNING**

- **In an accident you could be thrown from the vehicle through an open moonroof. Always use seat belts and child restraints.**
- **Do not allow anyone to stand up or extend any portion of their body out of the moonroof opening while the vehicle is in motion or while the moonroof is closing.**

**⚠ CAUTION**

- **Remove water drops, snow, ice or sand from the moonroof before opening.**
- **Do not place heavy objects on the moonroof or surrounding area.**

## Sunshade

Open and close the sunshade by sliding it forward or backward.

## If the moonroof does not close

Have your NISSAN dealer check and repair the moonroof.

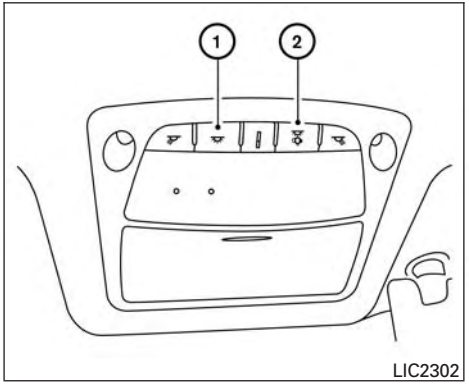


① The interior light can be turned ON regardless of door position. The light will go off after a period of time unless the ignition switch is placed in the ON position when any door is opened.

② The interior lights can be set to operate when the doors are opened. To turn off the interior lights when a door open, push the switch, the interior lights will not illuminate, regardless of door position.
The lights will go off when the ignition switch is placed in the ON position, or the driver's door is closed and locked. The lights will also go off after a period of time when the doors are open.

**NOTE:**

**The step lights illuminate when the driver and passenger doors are opened regardless of the interior light switch position. These lights will turn off automatically after a period of time while doors are open to prevent the battery from becoming discharged.**

**⚠ CAUTION**

**Do not use for extended periods of time with the engine stopped. This could result in a discharged battery.**

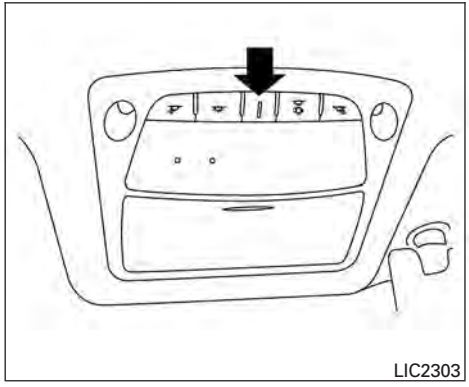


## CONSOLE LIGHT

The console light will turn on whenever the parking lights or headlights are illuminated.

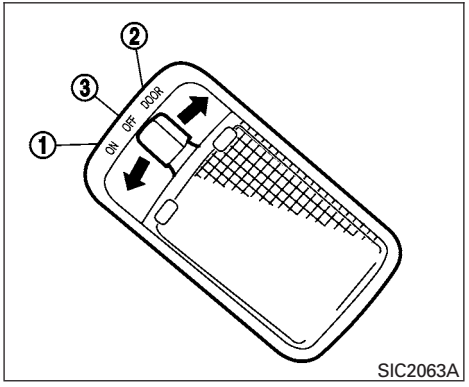


The interior light has a three-position switch and operates regardless of ignition switch position.

When the switch is in the ON position ①, the interior lights illuminate, regardless of door position. The lights will go off after a period of time unless the ignition switch is placed in the ACC or ON position.

When the switch is in the DOOR position ②, the interior lights will stay on for a period of time when:

- The doors are unlocked by the keyfob, a key or the power door lock switch while all doors are closed and the ignition switch is placed in the OFF position.
- The driver's door is opened and then closed while the key is removed from the ignition switch.
- The key is removed from the ignition switch while all doors are closed.

The lights will turn off while the timer is activated when:

- The driver's door is locked by the keyfob, a key, or the power door lock switch.
- The ignition switch is placed in the ON position.

When the switch is in the OFF position ③, the interior lights do not illuminate, regardless of door position.

The lights will turn off automatically after a period of time while doors are open to prevent the battery from becoming discharged.

**⚠ CAUTION**

**Do not use for extended periods of time with the engine stopped. This could result in a discharged battery.**

## MAP LIGHTS

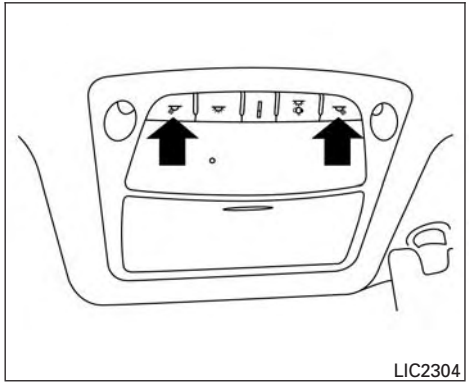


Push the button to turn the map lights on. To turn them off, press the button again.

**⚠ CAUTION**

**Do not use for extended periods of time with the engine stopped. This could result in a discharged battery.**

## TRUNK LIGHT

The light illuminates when the trunk lid is opened. When the trunk lid is closed, the light goes off.

The light will go off after a period of time if the trunk lid is left open, unless the ignition switch is placed in the ON position.

For bulb replacement procedures, refer to “Exterior and interior lights” in the “Maintenance and do-it-yourself” section of this manual.

# 3 Pre-driving checks and adjustments


Keys . . . . . 3-2
NISSAN Intelligent Key® (if so equipped) . . . . . 3-2
NISSAN Vehicle Immobilizer System keys . . . . . 3-4
Doors . . . . . 3-4
Locking with key. . . . . 3-5
Locking with inside lock knob . . . . . 3-5
Locking with power door lock switch . . . . . 3-5
Automatic door locks . . . . . 3-6
Child safety rear door lock. . . . . 3-6
Remote keyless entry system (if so equipped). . . . . 3-7
How to use remote keyless entry system . . . . . 3-8
NISSAN Intelligent Key® (if so equipped) . . . . . 3-10
Operating range. . . . . 3-12
Door locks/unlocks precaution . . . . . 3-13
NISSAN Intelligent Key® Operation . . . . . 3-13
How to use the remote keyless entry function . . . . . 3-16
Warning lights and audible reminders . . . . . 3-20
Warning signals . . . . . 3-20
Troubleshooting guide . . . . . 3-22
Hood . . . . . 3-23
Trunk lid . . . . . 3-24
Trunk lid release switch . . . . . 3-24
Interior trunk lid release . . . . . 3-24
Fuel-filler door . . . . . 3-25
Opener operation. . . . . 3-25
Fuel-filler cap . . . . . 3-25
Tilt/telescopic steering . . . . . 3-27
Tilt operation. . . . . 3-27
Telescopic operation. . . . . 3-28
Sun visors . . . . . 3-28
Vanity mirrors . . . . . 3-29
Card holder (driver's side only). . . . . 3-29
Mirrors . . . . . 3-29
Rearview mirror (if so equipped). . . . . 3-29
Automatic anti-glare rearview mirror (if so equipped) . . . . . 3-30
Outside mirrors . . . . . 3-30

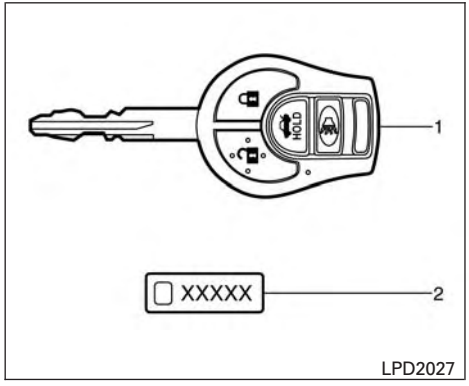


**Remote keyless entry keyfob (if so equipped)**

1. Integrated door lock keyfob
2. Key number plate

**⚠ CAUTION**

**Do not leave the ignition key inside the vehicle when you leave the vehicle.**

A key number plate is supplied with your keys. Record the key number and keep it in a safe place (such as your wallet), not in the vehicle. If you lose your keys, see a NISSAN dealer for duplicates by using the key number. NISSAN does not record key numbers so it is very important to keep track of your key number plate.

A key number is only necessary when you have lost all keys and do not have one to duplicate from. If you still have a key, your NISSAN dealer can duplicate it.

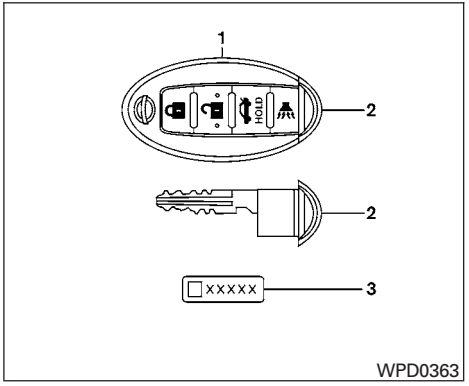


1. Two Intelligent Keys
2. Mechanical keys (inside Intelligent Keys)
3. Key number plate

## NISSAN INTELLIGENT KEY® (if so equipped)

Your vehicle can only be driven with the Intelligent Keys which are registered to your vehicle's Intelligent Key components and NISSAN Vehicle Immobilizer System components.

**Never leave these keys in the vehicle.**

As many as 4 Intelligent Keys can be registered and used with one vehicle. The new keys must be registered by a NISSAN dealer prior to use with the Intelligent Key and NISSAN Vehicle Immobilizer System of your vehicle. Since the registration process requires erasing all memory in the Intelligent Key components when registering new keys, be sure to take all Intelligent Keys that you have to the NISSAN dealer.

**⚠ CAUTION**

**Listed below are conditions or occurrences which will damage the Intelligent Key:**

- **Do not allow the Intelligent Key, which contains electrical components, to come into contact with water or salt water. This could affect the system function.**
- **Do not drop the Intelligent Key.**
- **Do not strike the Intelligent Key sharply against another object.**
- **Do not change or modify the Intelligent Key.**
- **Wetting may damage the Intelligent Key. If the Intelligent Key gets wet, immediately wipe until it is completely dry.**
- **Do not place the Intelligent Key for an extended period in an area where temperatures exceed 140°F (60°C).**
- **Do not attach the Intelligent Key with a key holder that contains a magnet.**
- **Do not place the Intelligent Key near equipment that produces a magnetic field, such as a TV, audio equipment and personal computers.**

**If an Intelligent Key is lost or stolen, NISSAN recommends erasing the ID code of that Intelligent Key from the vehicle. This may prevent the unauthorized use of the Intelligent Key to operate the vehicle. For information regarding the erasing procedure, contact a NISSAN dealer.**

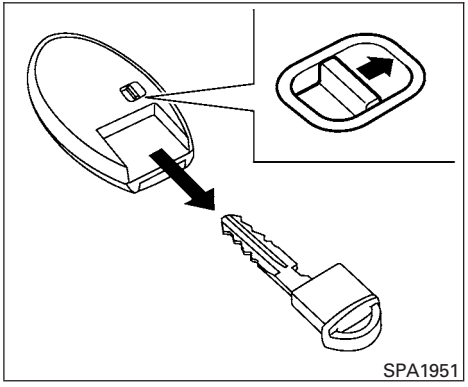


## Mechanical key

The Intelligent Key contains the mechanical key.

To remove the mechanical key, release the lock knob on the back of the Intelligent Key.

To install the mechanical key, firmly insert it into the Intelligent Key until the lock knob returns to the lock position.

Use the mechanical key to lock or unlock the driver's door.

**⚠ CAUTION**

**Always carry the mechanical key installed in the Intelligent Key slot.**

See “Doors” in this section.

## NISSAN VEHICLE IMMOBILIZER SYSTEM KEYS

You can only drive your vehicle using the master keys which are registered to the NISSAN Vehicle Immobilizer System components in your vehicle. These keys have a transponder chip in the key head.

The master key can be used for all the locks.

**Never leave these keys in the vehicle.**

Additional or replacement keys:

If you still have a key, the key number is not necessary when you need extra NISSAN Vehicle Immobilizer System keys. Your dealer can duplicate your existing key. As many as 5 NISSAN Vehicle Immobilizer System keys can be used with one vehicle. You should bring all NISSAN Vehicle Immobilizer System keys that you have to your NISSAN dealer for registration. This is because the registration process will erase the memory of all key codes previously registered into the NISSAN Vehicle Immobilizer System. After the registration process, these components will only recognize keys coded into the NISSAN Vehicle Immobilizer System during registration. Any key that is not given to your dealer at the time of registration will no longer be able to start your vehicle.

**⚠ CAUTION**

**Do not allow the immobilizer system key, which contains an electrical transponder, to come into contact with water or salt water. This could affect system function.**

When the doors are locked using one of the following methods, the doors cannot be opened using the inside or outside door handles. The doors must be unlocked to open the doors.

**⚠ WARNING**

- **Always have the doors locked while driving. Along with the use of seat belts, this provides greater safety in the event of an accident by helping to prevent persons from being thrown from the vehicle. This also helps keep children and others from unintentionally opening the doors, and will help keep out intruders.**
- **Before opening any door, always look for and avoid oncoming traffic.**
- **Do not leave children unattended inside the vehicle. They could unknowingly activate switches or controls. Unattended children could become involved in serious accidents.**

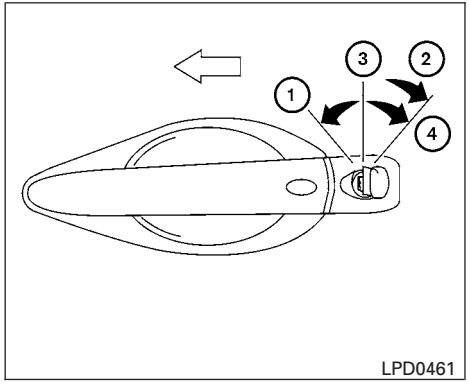


**Driver's side**

## LOCKING WITH KEY

The power door lock system allows you to lock or unlock all doors at the same time.

Turning the key toward the front ① of the vehicle locks all doors.

Turning the key one time toward the rear ② of the vehicle unlocks that door. From that position, returning the key to neutral ③ (where the key can only be removed and inserted) and turning it toward the rear again ④ within 5 seconds unlocks all doors.

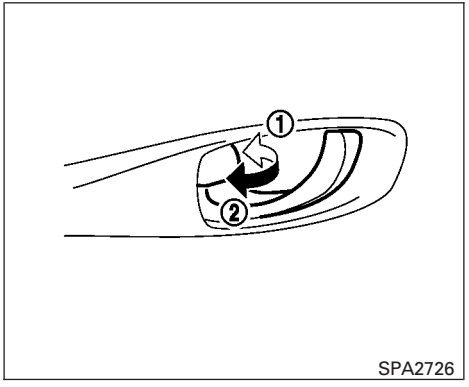


**Inside lock**

## LOCKING WITH INSIDE LOCK KNOB

To lock the door without the key, move the inside lock knob to the lock position ①, then close the door.

To unlock the door without the key, move the inside lock knob to the unlock position ②.

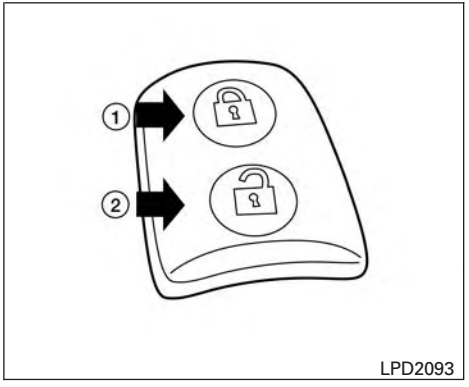


**Door lock switch**

## LOCKING WITH POWER DOOR LOCK SWITCH

To lock all the doors without a key, push the door lock switch (driver's or front passenger's side) to the lock position ①. When locking the door this way, be certain not to leave the key inside the vehicle.

To unlock all the doors without a key, push the door lock switch (driver's or front passenger's side) to the unlock position ②.

### Lockout protection

When the power door lock switch is moved to the lock position and any door is open, all doors will lock and unlock automatically. With the Intelligent Key left in the vehicle and any door is open, all doors will unlock automatically and a chime will sound after the door is closed.

These functions help to prevent the Intelligent Key from being accidentally locked inside the vehicle.

## AUTOMATIC DOOR LOCKS

- All doors lock automatically when the vehicle speed reaches 15 MPH (24 km/h).
- All doors unlock automatically when the ignition is placed in the OFF position (models with Intelligent Key system) or when the key is removed from the ignition switch (models without Intelligent Key system).

**The automatic unlock function can be deactivated or activated.** To deactivate or activate the automatic door unlock system, perform the following procedure:

1. Close all doors.
2. Place the ignition switch in the ON position.
3. Within 20 seconds of performing Step 2, push and hold the power door lock switch to the 🔓 position (UNLOCK) for more than 5 seconds.
4. When activated, the hazard indicator will flash twice. When deactivated, the hazard indicator will flash once.
5. The ignition switch must be placed in the OFF and ON position again between each setting change.

When the automatic door unlock system is deactivated, the doors do not unlock when the ignition switch is placed in the OFF position (models with Intelligent Key system) or when the key is removed from the ignition switch (models without Intelligent Key system). To unlock the door manually, use the inside lock knob or the power door lock switch (driver's or front passenger's side).

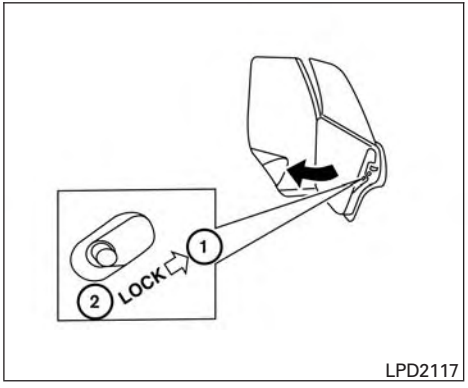

LPD2117

## CHILD SAFETY REAR DOOR LOCK

Child safety locks help prevent the rear doors from being opened accidentally, especially when small children are in the vehicle.

The child safety lock levers are located on the edge of the rear doors.

When the lever is in the unlock position ②, the door can be opened from the outside or the inside.

**When the lever is in the LOCK position ①, the door can be opened only from the outside.**

## REMOTE KEYLESS ENTRY SYSTEM (if so equipped)

**⚠ WARNING**

- **Radio waves could adversely affect electric medical equipment. Those who use a pacemaker should contact the electric medical equipment manufacturer for the possible influences before use.**
- **The remote keyless entry keyfob transmits radio waves when the buttons are pressed. The FAA advises radio waves may affect aircraft navigation and communication systems. Do not operate the remote keyless entry keyfob while on an airplane. Make sure the buttons are not operated unintentionally when the unit is stored for a flight.**

It is possible to lock/unlock all doors, turn the interior lights on, and activate the panic alarm by using the keyfob from outside the vehicle.

**Be sure to remove the key from the vehicle before locking the doors.**

The keyfob can operate at a distance of approximately 33 ft (10 m) from the vehicle. The effective distance depends on the conditions around the vehicle.

As many as 5 keyfobs can be used with one vehicle. For information concerning the purchase and use of additional keyfobs, contact a NISSAN dealer.

The keyfob will not function when:

- the battery is discharged
- the distance between the vehicle and the keyfob is over 33 ft (10 m)

**The panic alarm will not activate when the key is in the ignition switch.**

**⚠ CAUTION**

**Listed below are conditions or occurrences which will damage the keyfob:**

- **Do not allow the keyfob, which contains electrical components, to come into contact with water or salt water. This could affect the system function.**
- **Do not drop the keyfob.**
- **Do not strike the keyfob sharply against another object.**
- **Do not change or modify the keyfob.**
- **Wetting may damage the keyfob. If the keyfob gets wet, immediately wipe until it is completely dry.**
- **Do not place the keyfob for an extended period in an area where temperatures exceed 140°F (60°C).**
- **Do not attach the keyfob with a key holder that contains a magnet.**
- **Do not place the keyfob near equipment that produces a magnetic field, such as a TV, audio equipment and personal computers.**

**If a keyfob is lost or stolen, NISSAN recommends erasing the ID code of that keyfob. This will prevent the keyfob from unauthorized use to unlock the vehicle. For information regarding the erasing procedure, please contact a NISSAN dealer.**

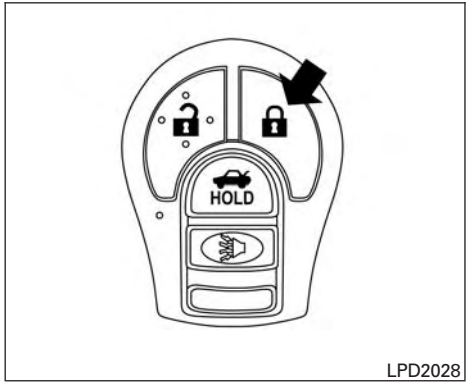

LPD2028

## HOW TO USE REMOTE KEYLESS ENTRY SYSTEM

### Locking the doors

1. Remove the ignition key.
2. Close all the doors.
3. Push the LOCK button on the keyfob.

- All the doors will lock.
- The hazard indicator flashes twice and the horn beeps once .

**NOTE:**

**An auto-relock function will operate after a full or partial unlock, when no further user action occurs. The relock will operate approximately 1 minute after full or partial unlock. The auto-relock function is cancelled when any door is opened or the key is inserted into the ignition.**

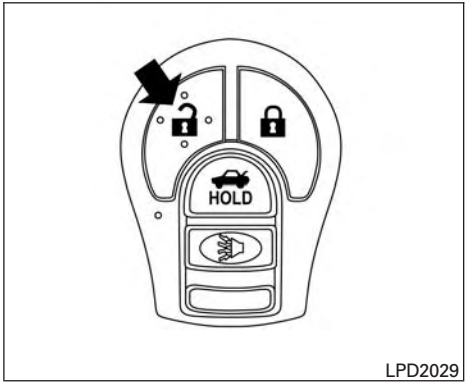

LPD2029

### Unlocking the doors

1. Press the UNLOCK button on the keyfob to unlock the drivers door.
2. The hazard warning lights flash once.
3. Press the UNLOCK button again within 5 seconds to unlock all doors.

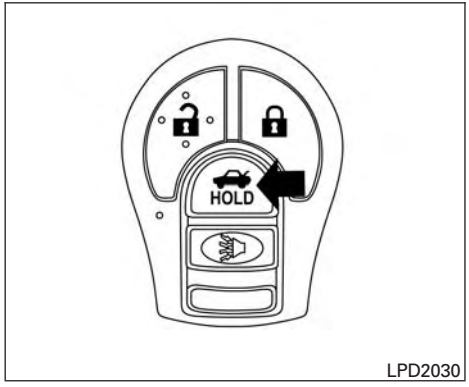

LPD2030

## Releasing the trunk lid

Press the HOLD button on the keyfob for longer than 0.5 seconds to open the trunk lid. The trunk release button on the keyfob will not operate when the ignition switch is placed in the ON position.

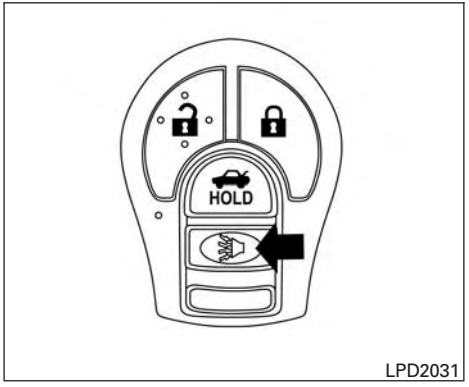

LPD2031

## Using the panic alarm

If you are near your vehicle and feel threatened, you may activate the panic alarm to call attention by pressing and holding the button on the keyfob for **longer than 0.5 seconds.**

The panic alarm will stay on for a period of time.

The panic alarm stops when:

- it has run for a period of time, or
- any button is
- pressed on the keyfob.

## Using the interior light

Press the button on the keyfob once to turn on the interior lights.

For additional information, refer to “Interior light” in the “Instruments and controls” section in this manual.

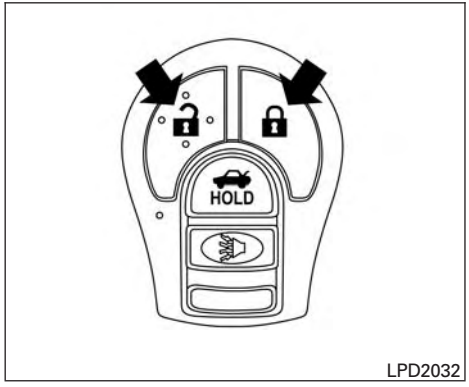


## Silencing the horn beep feature

If desired, the horn beep feature can be deactivated using the keyfob.

**To deactivate:** Press and hold the and buttons **for at least 2 seconds.**

The hazard warning lights will flash three times to confirm that the horn beep feature has been deactivated.

**To activate:** Press and hold the and buttons **for at least 2 seconds once more.**

The hazard warning lights will flash once and the horn will sound once to confirm that the horn beep feature has been reactivated.

Deactivating the horn beep feature does not silence the horn if the alarm is triggered.

# NISSAN INTELLIGENT KEY® (if so equipped)

**WARNING**

- **Radio waves could adversely affect electric medical equipment. Those who use a pacemaker should contact the electric medical equipment manufacturer for the possible influences before use.**
- **The Intelligent Key transmits radio waves when the buttons are pressed. The FAA advises the radio waves may affect aircraft navigation and communication systems. Do not operate the Intelligent Key while on an airplane. Make sure the buttons are not operated unintentionally when the unit is stored for a flight.**

The Intelligent Key system can operate all the door locks using the remote controller function or pushing the request switch on the vehicle without taking the key out from a pocket or purse. The operating environment and/or conditions may affect the Intelligent Key system operation.

Be sure to read the following before using the Intelligent Key system.

**⚠ CAUTION**

- **Be sure to carry the Intelligent Key with you when operating the vehicle.**
- **Never leave the Intelligent Key in the vehicle when you leave the vehicle.**

The Intelligent Key is always communicating with the vehicle as it receives radio waves. The Intelligent Key system transmits weak radio waves. Environmental conditions may interfere with the operation of the Intelligent Key system under the following operating conditions:

- When operating near a location where strong radio waves are transmitted, such as a TV tower, power station and broadcasting station.
- When in possession of wireless equipment, such as a cellular telephone, transceiver, and CB radio.
- When the Intelligent Key is in contact with or covered by metallic materials.
- When any type of radio wave remote control is used nearby.
- When the Intelligent Key is placed near an electric appliance such as a personal computer.
- When the vehicle is parked near a parking meter.

In such cases, correct the operating conditions before using the Intelligent Key function or use the mechanical key.

Although the life of the battery varies depending on the operating conditions, the battery's life is approximately 2 years. If the battery is discharged, replace it with a new one.

When the Intelligent Key battery is low, the Intelligent Key system warning light ( KEY ) will blink green for about 30 seconds after the ignition switch is placed in the ON position.

Since the Intelligent Key is continuously receiving radio waves, if the key is left near equipment which transmits strong radio waves, such as signals from a TV and personal computer, the battery life may become shorter.

For information regarding replacement of a battery, see "Battery replacement" in the "Maintenance and do-it-yourself" section.

As many as 4 Intelligent Keys can be registered and used with one vehicle. For information about the purchase and use of additional Intelligent Keys, contact a NISSAN dealer.

**⚠ CAUTION**

**Listed below are conditions or occurrences which will damage the Intelligent Key:**

- **Do not allow the Intelligent Key, which contains electrical components, to come into contact with water or salt water. This could affect the system function.**
- **Do not drop the Intelligent Key.**
- **Do not strike the Intelligent Key sharply against another object.**
- **Do not change or modify the Intelligent Key.**
- **Wetting may damage the Intelligent Key. If the Intelligent Key gets wet, immediately wipe until it is completely dry.**
- **Do not place the Intelligent Key for an extended period in an area where temperatures exceed 140°F (60°C).**
- **Do not attach the Intelligent Key with a key holder that contains a magnet.**
- **Do not place the Intelligent Key near equipment that produces a magnetic field, such as a TV, audio equipment and personal computers.**

If an Intelligent Key is lost or stolen, NISSAN recommends erasing the ID code of that Intelligent Key from the vehicle. This may prevent the unauthorized use of the Intelligent Key to operate the vehicle. For information regarding the erasing procedure, contact a NISSAN dealer.

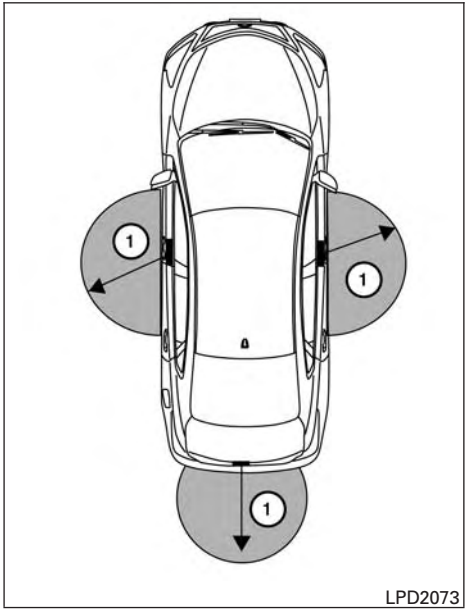


## OPERATING RANGE

The Intelligent Key functions can only be used when the Intelligent Key is within the specified operating range from the request switch ①.

When the Intelligent Key battery is discharged or strong radio waves are present near the operating location, the Intelligent Key operating range becomes narrower, and the Intelligent Key may not function properly.

The operating range is within 31.50 in (80 cm) from each request switch ①.

If the Intelligent Key is too close to the door glass, handle or rear bumper, the request switches may not function.

When the Intelligent Key is within the operating range, it is possible for anyone, even someone who does not carry the Intelligent Key, to push the request switch to lock/unlock the doors.

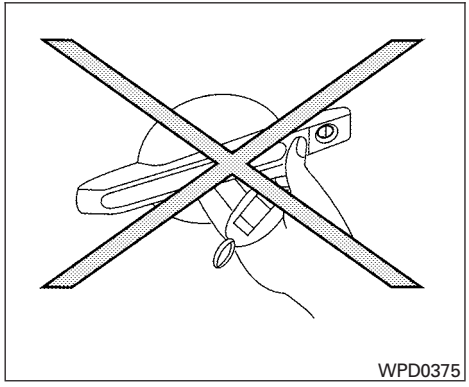


## DOOR LOCKS/UNLOCKS PRECAUTION

- Do not push the door handle request switch with the Intelligent Key held in your hand as illustrated. The close distance to the door handle will cause the Intelligent Key system to have difficulty recognizing that the Intelligent Key is outside the vehicle.
- After locking with the door handle request switch, verify the doors are securely locked by testing them.
- To prevent the Intelligent Key from being left inside the vehicle, make sure you carry the Intelligent Key with you and then lock the doors.
- Do not pull the door handle before pushing the door handle request switch. The door will be unlocked but will not open. Release the door handle once and pull it again to open the door.

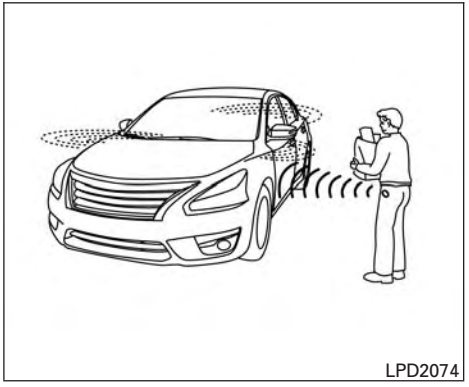


## NISSAN INTELLIGENT KEY® OPERATION

You can lock or unlock the doors without taking the Intelligent Key out of your pocket or bag.

When you carry the Intelligent Key with you, you can lock or unlock all doors by pushing the door handle request switch within the range of operation.

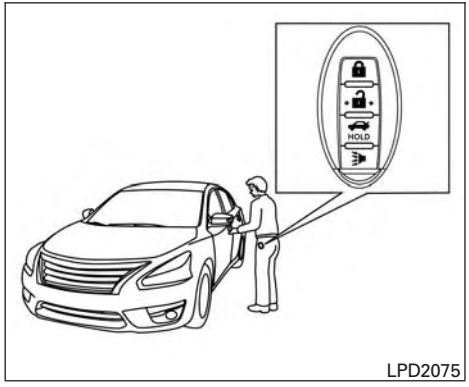

LPD2075

## Locking doors

1. Move the shift lever to the P (Park) position, place the ignition switch in the LOCK position and make sure you carry the Intelligent Key with you.
2. Close all doors.
3. Push any door handle request switch ① while carrying the Intelligent Key with you.
4. All doors and the trunk will lock.
5. The hazard warning lights flash twice and the outside buzzer sounds twice.

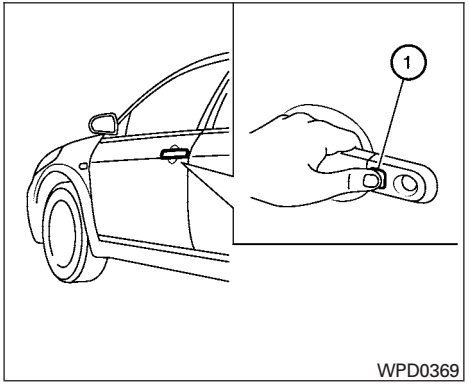

WPD0369

**NOTE:**

- Doors lock with the door handle request switch while the ignition switch is not in the LOCK position.
- Doors do not lock by pushing the door handle request switch while any door is open. However, doors lock with the mechanical key even if any door is open.
- Doors do not lock with the door handle request switch with the Intelligent Key inside the vehicle and a beep sounds to warn you. However, when an Intelligent Key is inside the vehicle, doors can be locked with another Intelligent Key.

**⚠ CAUTION**

- **After locking the doors using the request switch, make sure that the doors have been securely locked by operating the door handle or the trunk opener switch.**
- **When locking the doors using the request switch, make sure to have the Intelligent Key in your possession before operating the request switch to prevent the Intelligent Key from being left in the vehicle.**
- **The request switch is operational only when the Intelligent Key has been detected by the Intelligent Key system.**

**Lockout protection**

To prevent the Intelligent Key from being accidentally locked in the vehicle, lockout protection is equipped with the Intelligent Key.

When the driver's side door is open, the doors are locked, and then the Intelligent Key is put inside the vehicle and all the doors are closed; the lock will automatically unlock and the door buzzer sounds.

**NOTE:**

**The doors may not lock when the Intelligent Key is in the same hand that is operating the request switch to lock the door. Put the Intelligent Key in a purse, pocket or your other hand.**

**⚠ CAUTION**

**The lockout protection may not function under the following conditions:**

- **When the Intelligent Key is placed on top of the instrument panel.**
- **When the Intelligent Key is placed on top of the rear parcel shelf.**
- **When the Intelligent Key is placed inside the glove box or a storage bin.**
- **When the Intelligent Key is placed inside the door pockets.**
- **When the Intelligent Key is placed on or under the spare tire area.**
- **When the Intelligent Key is placed inside or near metallic materials.**

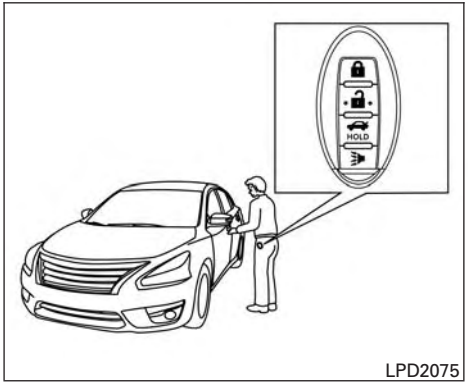

LPD2075

## Unlocking doors

1. Carry the Intelligent Key.
2. Push the door handle request switch ①.
3. The hazard warning lights flash once and the outside buzzer sounds once.
4. Push the door handle request switch ① again within 60 seconds to unlock all doors.

If a door handle is pulled while unlocking the doors, that door may not be unlocked. Returning the door handle to its original position will unlock the door. If the door does not unlock after returning the door handle, push the door handle request switch to unlock the door.

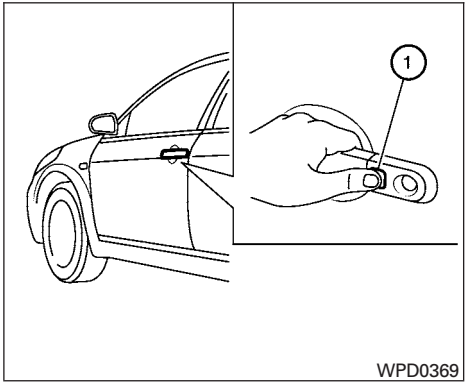

WPD0369

All doors will be locked automatically unless one of the following operations is performed within 1 minute after pushing the request switch.

- Opening any door.
- Pushing the ignition switch.

The interior light timer illuminates for a period of time when a door is unlocked and the room light switch is in the DOOR position.

The interior light can be turned off without waiting by performing one of the following operations.

- Placing the ignition switch in the ON position.

- Locking the doors with the remote controller.
- Switching the room light switch to the OFF position.

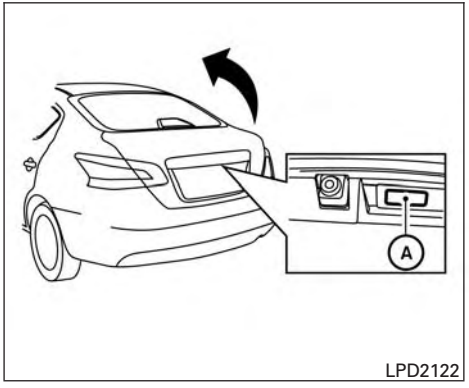

LPD2122

## Opening the trunk lid

1. Push the trunk opener request switch Ⓐ for more than 1 second while carrying the Intelligent Key with you.
2. The trunk will unlatch. A chime will sound 4 times.
3. Raise the trunk lid to open the trunk.

**Lockout protection**

To prevent the Intelligent Key from being accidentally locked in the trunk, lockout protection is equipped with the Intelligent Key.

When all doors are locked and the trunk lid is closed with the Intelligent Key inside the trunk, the outside buzzer will sound and the trunk will open.

## HOW TO USE THE REMOTE KEYLESS ENTRY FUNCTION

The remote keyless entry function can operate all door locks using the remote keyless function of the Intelligent Key. The remote keyless function can operate at a distance of 33 ft (10 m) away from the vehicle. The operating distance depends upon the conditions around the vehicle.

The remote keyless entry function will not function under the following conditions:

- When the Intelligent Key is not within the operational range.
- When the doors or the trunk are open or not closed securely.
- When the Intelligent Key battery is discharged.

**⚠ CAUTION**

**When locking the doors using the Intelligent Key, be sure not to leave the key in the vehicle.**

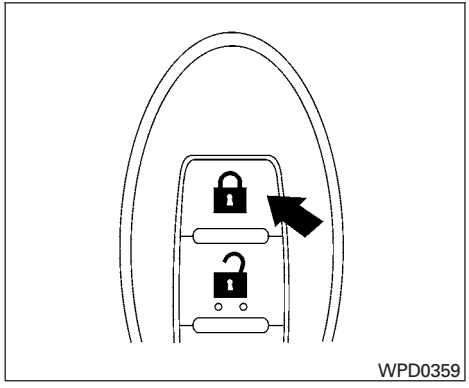


## Locking doors

1. Place the ignition switch in the LOCK position.
2. Close all doors.
3. Press the button on the Intelligent Key.
4. The hazard warning lights flash twice and the horn beeps once.
5. All doors will be locked.

**CAUTION**

**After locking the doors using the Intelligent Key, be sure that the doors have been securely locked by operating the door handles.**

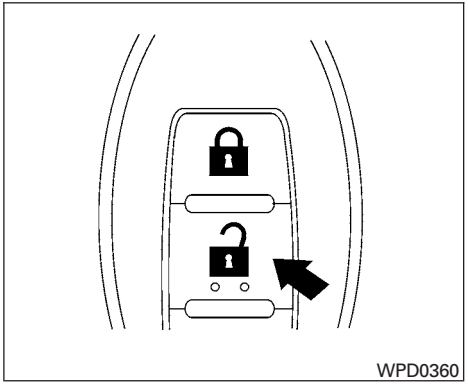


## Unlocking doors

1. Press the button on the Intelligent Key.
2. The hazard warning lights flash once.
3. Press the button again within 1 minute to unlock all doors.

All doors will be locked automatically unless one of the following operations is performed within 1 minute after pressing the button:

- Opening any doors.
- Pushing the ignition switch.

The interior light illuminates for a period of time when a door is unlocked and the room light switch is in the DOOR position.

The light can be turned off without waiting by performing one of the following operations:

- Placing the ignition switch in the ON position.
- Locking the doors with the Intelligent Key.
- Switching the room light switch to the OFF position.

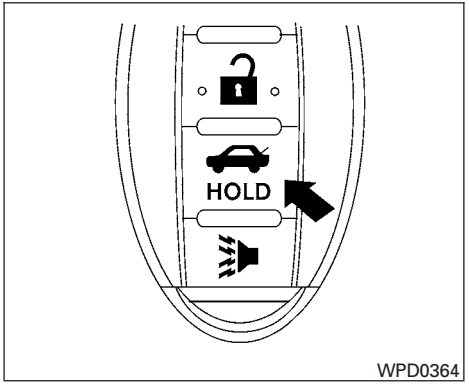

WPD0364

## Releasing the trunk lid

Press the HOLD button for longer than 0.5 seconds to open the trunk lid. The trunk release button will not operate when the ignition switch is placed in the ON position.

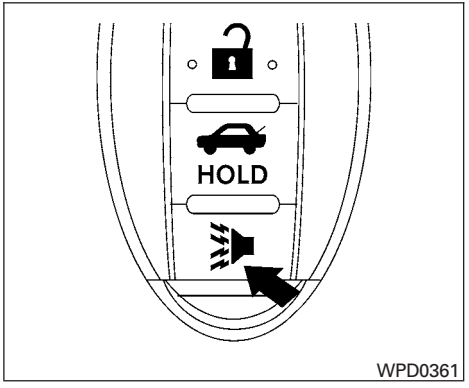

WPD0361

## Using the panic alarm

If you are near your vehicle and feel threatened, you may activate the panic alarm to call attention by pressing and holding the button on the Intelligent Key for **longer than 0.5 seconds.**

The panic alarm and headlights will stay on for a period of time.

The panic alarm stops when:

- It has run for a period of time, or
- Any button is pressed on the Intelligent Key.
- The request switch on the driver or passenger door has been pushed and the Intelligent Key is in range of the door handle.

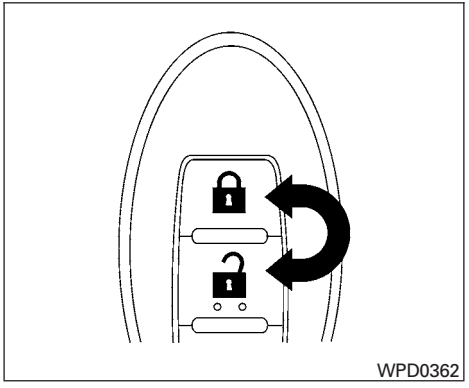


## Silencing the horn beep feature

If desired, the horn beep feature can be deactivated using the Intelligent Key.

**To deactivate:** Press and hold the and buttons **for at least 2 seconds.**

The hazard warning lights will flash 3 times to confirm that the horn beep feature has been deactivated.

**To activate:** Press and hold the and buttons **for at least 2 seconds once more.**

The hazard warning lights will flash once and the horn will sound once to confirm that the horn beep feature has been reactivated.

Deactivating the horn beep feature does not silence the horn if the alarm is triggered.

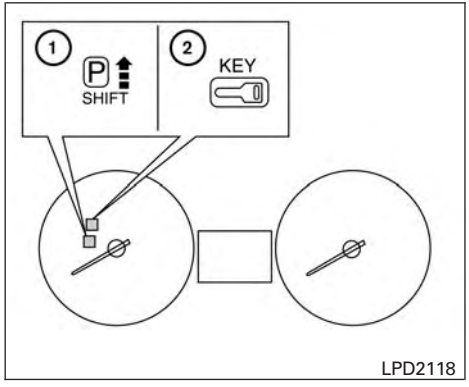


① P (Park) position selecting warning light
② NISSAN Intelligent Key® warning light

## WARNING LIGHTS AND AUDIBLE REMINDERS

The Intelligent Key is equipped with a function that is designed to minimize improper operations and to help prevent the vehicle from being stolen. The warning buzzer sounds and the warning light illuminates when improper operations are detected.

**⚠ CAUTION**

**When the buzzer sounds and the warning light illuminates, be sure to check both the vehicle and the Intelligent Key.**

## WARNING SIGNALS

To help prevent the vehicle from moving unexpectedly by erroneous operation of the Intelligent Key or to help prevent the vehicle from being stolen, a chime or buzzer sounds from inside and outside the vehicle and a warning light comes on in the instrument panel.

When a chime or beep sounds or the warning light comes on, be sure to check the vehicle and the Intelligent Key.

### Audible reminder and warning when locking the doors

When the chime or buzzer sounds from inside and outside the vehicle, check for the following:

- The ignition switch is placed in the LOCK position.
- The Intelligent Key is not left inside the vehicle.
- The shift lever is in the P (Park) position.

### Audible reminder and warning when the engine stops

When the P position selecting warning light ( P SHIFT ) in the instrument panel blinks in red:

- Make sure the shift lever is in the P (Park) position.

When the chime sounds intermittently:

- Make sure the shift lever is in the P (Park) position and the ignition switch is placed in the LOCK position.

If the chime sounds continuously when the driver's door is opened, check the following:

- The shift lever is placed in the P (Park) position and the ignition switch is placed in the LOCK position.
- The warning chime may stop when one of the following is performed:
  - Returning the ignition switch to the LOCK position.
  - Closing the doors.

## Alarm and warning when the engine starts

When the Intelligent Key system warning light ( KEY ) blinks red and the outside buzzer sounds, make sure the Intelligent Key is inside the vehicle.

## Warning for low battery power

When the Intelligent Key battery is low, the Intelligent Key system warning light ( KEY ) will blink green for about 30 seconds after the ignition switch is placed in the ON position. This warning is to let you know that the battery of the Intelligent Key will run down soon. Replace it with a new one. Refer to “Battery replacement” in the “Maintenance and do-it-yourself” section.

NISSAN recommends replacing the battery at a NISSAN dealer.

## Preventing the Intelligent Key from being left in the vehicle

If you lock all doors using the power door lock switch with the Intelligent Key in the vehicle, all of the doors unlock immediately and the buzzer will warn you when the door is closed.

| Symptom | | Possible Cause | Remedy |
|---|---|---|---|
| When pushing the ignition switch to stop the engine | The P (Park) warning light in the instrument panel illuminates and the inside chime sounds continuously. | The shift lever is not in the P (Park) position. | Make sure that the shift lever is in the P (Park) position. |
| When placing the shift lever in the P (Park) position | The inside warning chime sounds continuously. | The ignition switch is in the ACC or ON position. | Place the ignition switch in the OFF position. |
| When opening the driver's door | A warning chime sounds continuously. | The ignition switch is in the ACC position. | Place the ignition switch in the OFF position. |
| When pushing the door handle request switch to lock the door | The outside chime sounds for a few seconds. | The Intelligent Key is inside the trunk. | Be sure to carry the Intelligent Key with you. |
| | | The Intelligent Key is inside the vehicle. | Be sure to carry the Intelligent Key with you. |
| | | A door is not closed securely. | Close the door securely. |
| When closing the doors | The key warning light in the instrument panel blinks in yellow, the outside chime sounds 3 times and the inside warning chime sounds for approximately 3 seconds. | The ignition switch is in the ACC or ON position. | Place the ignition switch in the OFF position. |
| | The P (Park) warning light in the instrument panel illuminates and the outside chime sounds continuously. | The ignition switch is in the ACC or OFF position and the shift lever is not in the P (Park) position. | Make sure that the shift lever is in the P (Park) position and place the ignition switch in the OFF position. |
| | The outside chime sounds for approximately 3 seconds and all doors unlock. | The Intelligent Key is in the vehicle or trunk. | Be sure to carry the Intelligent Key with you. |
| When opening the driver's door | A warning chime sounds continuously. | The ignition switch is in the ACC position. | Place the ignition switch in the OFF position. |
| When closing the trunk lid | The outside chime sounds for approximately 10 seconds and the trunk lid opens. | The Intelligent Key is inside the trunk. | Be sure to carry the Intelligent Key with you. |
| When pushing the ignition switch to start the engine | The key warning light in the instrument panel blinks in green. | The battery charge is low. | Replace the battery with a new one. See "Battery replacement" in the "Maintenance and do-it-yourself" section. |
| When pushing the LOCK button on the Intelligent Key to the lock the door | The outside chime sounds for a few seconds and all the doors unlock. | The Intelligent Key is inside the trunk. | Be sure to carry the Intelligent Key with you. |
| | | The Intelligent Key is inside the vehicle. | Be sure to carry the Intelligent Key with you. |
| | | A door is not closed securely. | Close the doors securely. |

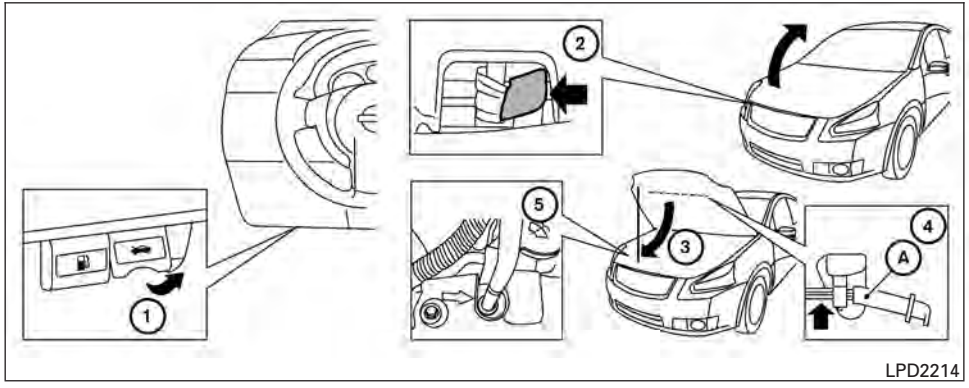


1. Pull the hood lock release handle ① located below the instrument panel until the hood springs up slightly.
2. Locate the lever ② in between the hood and grille and push the lever sideways with your fingertips.
3. Raise the hood ③.
4. Remove the support rod ④ and insert it into the slot marked by an arrow⑤.

**NOTE:**

**Do not place the support rod in a location other than the designated slot.**

**Hold the coated parts Ⓐ when removing or resetting the support rod. Avoid direct contact with the metal parts, as they may be hot immediately after the engine has been stopped.**

When closing the hood, return the support rod to its original position, lower the hood to approximately 12 in (30 cm) above the latch and release it. This allows proper engagement of the hood latch.

**⚠ WARNING**

- **Make sure the hood is completely closed and latched before driving. Failure to do so could cause the hood to fly open and result in an accident.**
- **If you see steam or smoke coming from the engine compartment, to avoid injury do not open the hood.**

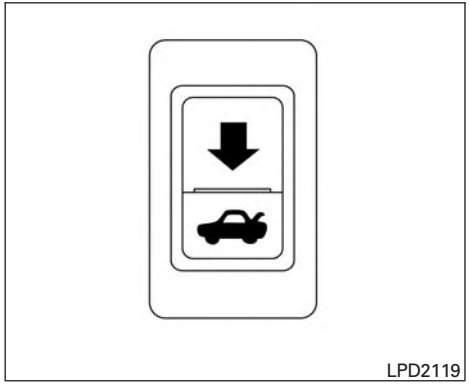


TRUNK LID RELEASE SWITCH

**⚠WARNING**

- **Do not drive with the trunk lid open. This could allow dangerous exhaust gases to be drawn into the vehicle. See "Exhaust gas" in the "Starting and driving" section of this manual.**
- **Closely supervise children when they are around cars to prevent them from playing and becoming locked in the trunk where they could be seriously injured. Keep the car locked, with the rear seatback and trunk lid securely latched when not in use, and prevent children's access to car keys.**

To open the trunk lid, push the opener switch down.

To close the trunk lid, lower and push the trunk lid down securely.

**NOTE:**

**You can open the trunk lid with the Intelligent Key. Refer to "NISSAN Intelligent Key®" in this section.**

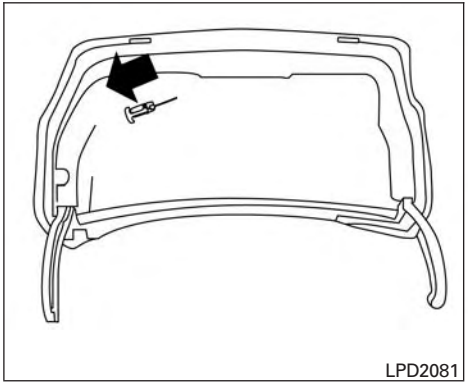


INTERIOR TRUNK LID RELEASE

**⚠WARNING**

**Closely supervise children when they are around cars to prevent them from playing and becoming locked in the trunk where they could be seriously injured. Keep the car locked, with the rear seatback and trunk lid securely latched when not in use, and prevent children's access to car keys.**

The interior trunk lid release mechanism provides a means of escape for children and adults in the event they become locked inside the trunk.

To open the trunk from the inside, pull the illuminated release handle until the lock releases and push up on the trunk lid. The release handle is made of a material that glows in the dark after a brief exposure to ambient light.

The handle is located inside the trunk compartment on the interior of the trunk lid.

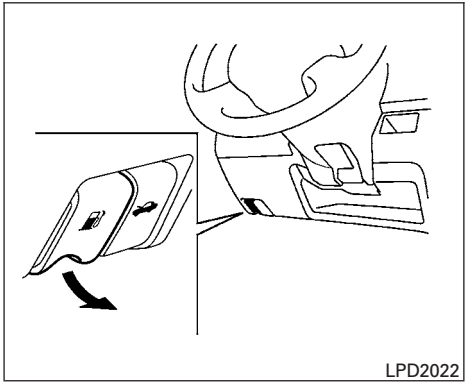


## OPENER OPERATION

The fuel-filler lid release is located below the instrument panel. To open the fuel-filler lid, pull the release. To lock, close the fuel-filler lid securely.

## FUEL-FILLER CAP

**⚠ WARNING**

- **Gasoline is extremely flammable and highly explosive under certain conditions. You could be burned or seriously injured if it is misused or mishandled. Always stop the engine and do not smoke or allow open flames or sparks near the vehicle when refueling.**
- **Do not attempt to top off the fuel tank after the fuel pump nozzle shuts off automatically. Continued refueling may cause fuel overflow, resulting in fuel spray and possibly a fire.**
- **Use only an original equipment type fuel-filler cap as a replacement. It has a built-in safety valve needed for proper operation of the fuel system and emission control system. An incorrect cap can result in a serious malfunction and possible injury. It could also cause the Malfunction Indicator Light (MIL) to come on.**
- **Never pour fuel into the throttle body to attempt to start your vehicle.**

- **Do not fill a portable fuel container in the vehicle or trailer. Static electricity can cause an explosion of flammable liquid, vapor or gas in any vehicle or trailer. To reduce the risk of serious injury or death when filling portable fuel containers:**
  - **Always place the container on the ground when filling.**
  - **Do not use electronic devices when filling.**
  - **Keep the pump nozzle in contact with the container while you are filling it.**
  - **Use only approved portable fuel containers for flammable liquid.**

**⚠ CAUTION**

- **Do not use E-15 or E-85 fuel in your vehicle. For further information see the "Fuel Recommendation" in the "Technical and consumer information" section of this manual.**
- **The LOOSE FUEL CAP warning message will be displayed if the fuel-filler cap is not properly tightened. It may take a few driving trips for the message to be displayed. Failure to tighten the fuel-filler cap properly after the LOOSE FUEL CAP warning message is displayed may cause the Malfunction Indicator Light (MIL) to illuminate.**
- **Failure to tighten the fuel-filler cap properly may cause the Malfunction Indicator Light (MIL) to illuminate. If the light illuminates because the fuel-filler cap is loose or missing, tighten or install the cap and continue to drive the vehicle. The light should turn off after a few driving trips. If the light does not turn off after a few driving trips, have the vehicle inspected by a NISSAN dealer.**
- **For additional information, see the "Malfunction Indicator Light (MIL)" in the "Instruments and Controls" section in this manual.**
- **If fuel is spilled on the vehicle body, flush it away with water to avoid paint damage.**

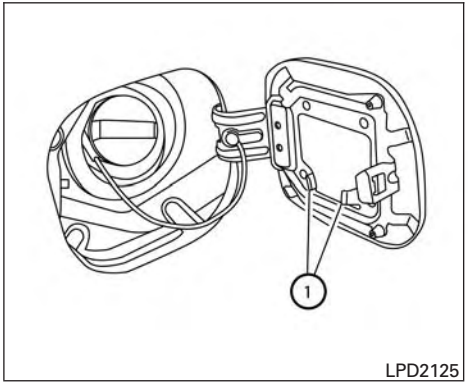

LPD2125

To remove the fuel-filler cap:

1. Turn the fuel-filler cap counterclockwise to remove.
2. Put the fuel-filler cap on the cap holder ① while refueling.

To install the fuel-filler cap:

1. Insert the fuel-filler cap straight into the fuel-filler tube.
2. Turn the fuel-filler cap clockwise until a single click is heard.

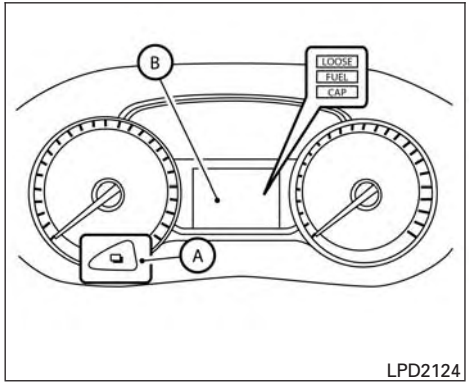

LPD2124

## Loose Fuel Cap warning message

The LOOSE FUEL CAP warning message displays in the odometer when the fuel-filler cap is not tightened correctly after the vehicle has been refueled. It may take a few driving trips for the message to be displayed. To turn off the warning message, perform the following:

1. Remove and install the fuel-filler cap as previously described as soon as possible.
2. Tighten the fuel-filler cap until it clicks.
3. Press the loose fuel cap warning reset button Ⓐ in the meter for about 1 second to turn off the LOOSE FUEL CAP warning message Ⓑ after tightening the fuel-filler cap.

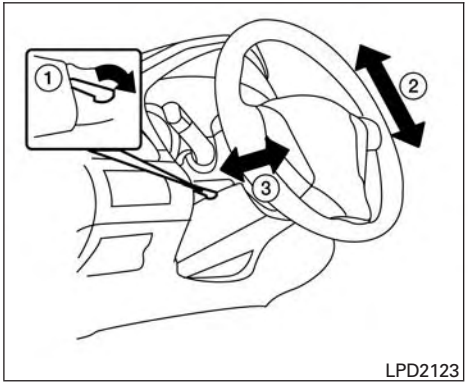

LPD2123

## TILT OPERATION

Pull the lock lever down ① and adjust the steering wheel up or down ② to the desired position.

Push the lock lever up ① firmly to lock the steering wheel in place.

**⚠ WARNING**

**Do not adjust the steering wheel while driving. You could lose control of your vehicle and cause an accident.**

## TELESCOPIC OPERATION

Pull the lock lever down ① and adjust the steering wheel forward or backward ③ to the desired position.

Push the lock lever up ① firmly to lock the steering wheel in place.

**⚠WARNING**

**Do not adjust the steering wheel any closer to you than is necessary for proper steering operation and comfort. The driver's air bag inflates with great force. If you are unrestrained, leaning forward, sitting sideways or out of position in any way, you are at greater risk of injury or death in a crash. You may also receive serious or fatal injuries from the air bag if you are up against it when it inflates. Always sit back against the seatback and as far away as practical from the steering wheel. Always use the seat belts.**

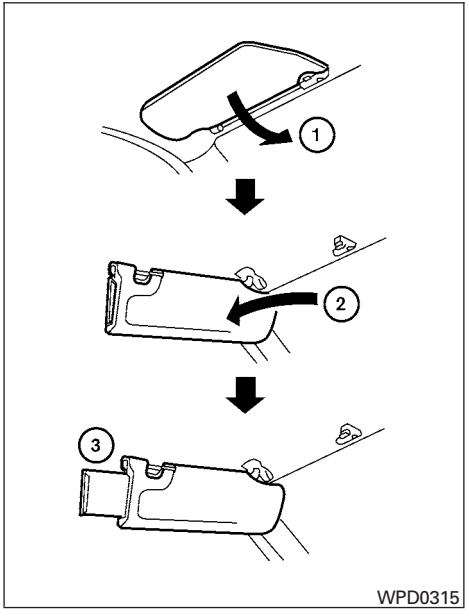


① To block glare from the front, swing down the sun visor.

② To block glare from the side, remove the sun visor from the center mount and swing the visor to the side.

③ Slide the extension sun visor in or out as needed.

**⚠CAUTION**

- **Do not store the sun visor before returning the extension to its original position.**
- **Do not pull the extension sun visor forcibly downward.**

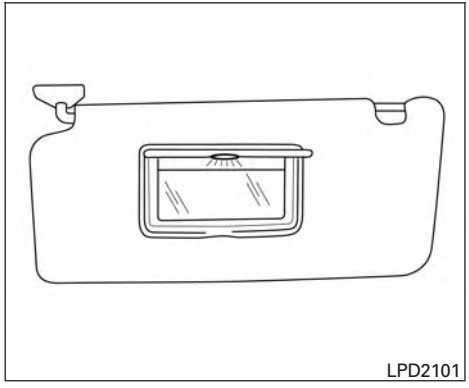


## VANITY MIRRORS

To access the vanity mirror, pull the sun visor down and flip open the mirror cover. Some vanity mirrors are illuminated and turn on when the mirror cover is open.

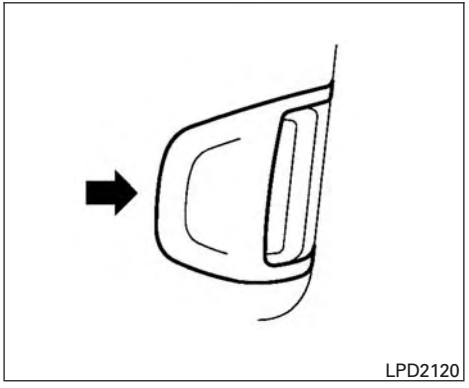


## CARD HOLDER (driver's side only)

To access the card holder, pull the sun visor down and slide card in the card holder. Do not view information while operating the vehicle.

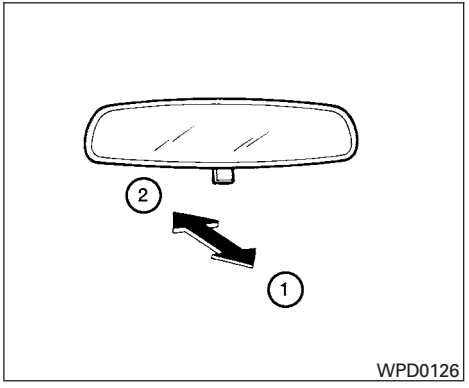


## REARVIEW MIRROR (if so equipped)

The night position ① reduces glare from the headlights of vehicles behind you at night.

Use the day position ② when driving in daylight hours.

**⚠ WARNING**

**Use the night position only when necessary, because it reduces rear view clarity.**

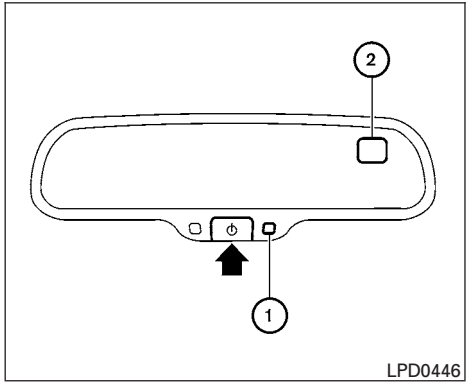


## AUTOMATIC ANTI-GLARE REARVIEW MIRROR (if so equipped)

The inside mirror is designed so that it automatically dims according to the intensity of the headlights of the vehicle following you. The automatic anti-glare feature is activated when the ignition switch is in the ON position.

**NOTE:**

**Do not hang any objects over the sensors ① or apply glass cleaner to the sensors. Doing so will reduce the sensitivity of the sensors, resulting in improper operation.**

The indicator light will illuminate when the automatic anti-glare feature is operating.

With the ignition switch in the ON position, press the ⏻ button as described:

- To turn off the anti-glare feature, press and hold the ⏻ button for 3-6 seconds. The indicator light will turn off.
- To turn on the anti-glare feature, press and hold the ⏻ button for 3-6 seconds again. The indicator light will turn on.

For more information about the compass ② and compass features (if so equipped), refer to “Compass display” in the “Instruments and controls” section of this manual.

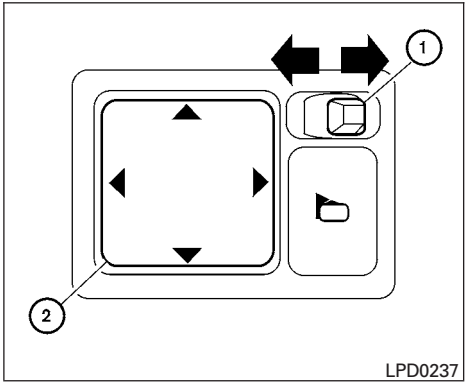


## OUTSIDE MIRRORS

The outside mirror remote control will operate only when the ignition switch is in the ACC or ON position.

Move the small switch ① to select the right or left mirror. Adjust each mirror to the desired position using the large switch ②.

**⚠ WARNING**

- **Objects viewed in the outside mirror on the passenger side are closer than they appear. Be careful when moving to the right. Using only this mirror could cause an accident. Use the inside mirror or glance over your shoulder to properly judge distances to other objects.**
- **Do not adjust the mirrors while driving. You could lose control of your vehicle and cause an accident.**

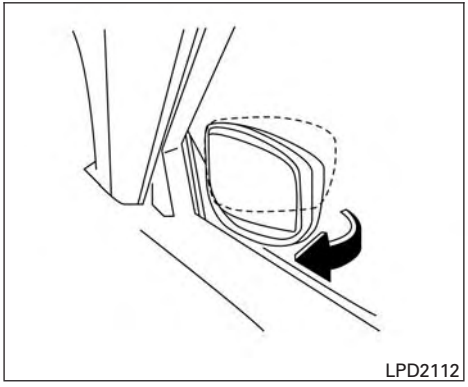


## Manual folding outside mirrors

Pull the outside mirror toward the door to fold it.

## Heated mirrors (if so equipped)

Some outside mirrors can be heated to defrost, defog, or de-ice for improved visibility. For additional information, see “Rear window and outside mirror defroster switch” in the “Instruments and controls” section of this manual.

## MEMO

# 4 Monitor, climate, audio, phone and voice recognition systems


Control panel buttons — color screen with Navigation System (if so equipped) . . . . . 4-4
How to use the touch-screen . . . . . 4-5
How to use the BACK button . . . . . 4-7
How to use the APPS – i button . . . . . 4-7
☼/☽ button . . . . . 4-9
How to use the ON-OFF button/VOL (volume) control knob . . . . . 4-9
How to use the CAMERA button . . . . . 4-9
RearView Monitor (if so equipped) . . . . . 4-10
How to read the displayed lines . . . . . 4-11
Difference between predicted and actual distances . . . . . 4-11
Adjusting the screen . . . . . 4-14
Operating tips . . . . . 4-15
Vents . . . . . 4-16
Heater and Air Conditioner (manual) (if so equipped) . . . . . 4-16
Controls . . . . . 4-17
Heater operation . . . . . 4-18
Air conditioner operation (if so equipped) . . . . . 4-19
Air flow charts . . . . . 4-20
Heater and air conditioner (automatic) (if so equipped) . . . . . 4-24
Automatic operation . . . . . 4-25
Manual operation . . . . . 4-26
Operating tips . . . . . 4-26
Servicing air conditioner (if so equipped) . . . . . 4-27
Audio system . . . . . 4-27
Radio . . . . . 4-27
FM radio reception . . . . . 4-28
AM radio reception . . . . . 4-28
Satellite radio reception (if so equipped) . . . . . 4-28
Audio operation precautions . . . . . 4-29
FM/AM radio with compact disc (CD) player (if so equipped) . . . . . 4-36
FM/AM/SAT radio with compact disc (CD) player (Type A) (if so equipped) . . . . . 4-42
FM/AM/SAT radio with compact disc (CD) player (Type B) (if so equipped) . . . . . 4-48
USB interface (models without Navigation System) (if so equipped) . . . . . 4-52
USB interface (models with Navigation System) . . . . . 4-54
iPod®* player operation without Navigation System (if so equipped) . . . . . 4-56
iPod®* player operation with Navigation System (if so equipped) . . . . . 4-58

Bluetooth® streaming audio without Navigation System (if so equipped) . . . . . 4-61
Bluetooth® streaming audio with Navigation System (if so equipped) . . . . . 4-62
Pandora® audio (if so equipped) . . . . . 4-63
CD care and cleaning . . . . . 4-64
Steering wheel switch for audio control (if so equipped) . . . . . 4-65
Antenna . . . . . 4-66
NissanConnect™ App Smartphone Integration (if so equipped) . . . . . 4-66
Registering with NissanConnect™ App . . . . . 4-66
Connect Phone . . . . . 4-67
Application Download . . . . . 4-67
Car phone or CB radio . . . . . 4-67
Bluetooth® Hands-Free Phone System without Navigation System (Type A) (if so equipped) . . . . . 4-68
Regulatory Information . . . . . 4-70
Using the system . . . . . 4-70
Control buttons . . . . . 4-72
Getting started . . . . . 4-73
List of voice commands . . . . . 4-75
Voice Adaptation (VA) mode . . . . . 4-79
Manual control . . . . . 4-81
Troubleshooting guide . . . . . 4-82
Bluetooth® Hands-Free Phone System without Navigation System (Type B) (if so equipped) . . . . . 4-83
Regulatory Information . . . . . 4-84
Using the system . . . . . 4-85
Control buttons . . . . . 4-86
Connecting procedure . . . . . 4-87
Voice commands . . . . . 4-88
Making a call . . . . . 4-89
Receiving a call . . . . . 4-90
During a call . . . . . 4-90
Ending a call . . . . . 4-90
Text messaging . . . . . 4-91
Bluetooth® settings . . . . . 4-92
Manual control . . . . . 4-93
Bluetooth® Hands-Free Phone System with Navigation System (if so equipped) . . . . . 4-93
Regulatory Information . . . . . 4-95
Voice commands . . . . . 4-95
Connecting Procedure . . . . . 4-96
Vehicle phonebook . . . . . 4-96
Making a call . . . . . 4-97
Receiving a call . . . . . 4-97

During a call . . . . . 4-97
Ending a call . . . . . 4-97
Text messaging. . . . . 4-97
Bluetooth® settings . . . . . 4-99
Phone settings . . . . . 4-100
NISSAN Voice Recognition System (if so equipped) . . . . . 4-101
Using the system . . . . . 4-101
System features . . . . . 4-102
Bluetooth® Hands-Free Phone System voice commands . . . . . 4-103
Navigation System voice commands . . . . . 4-104
Audio system voice commands. . . . . 4-104
Information voice commands. . . . . 4-104
My Apps Voice Commands . . . . . 4-104
Help voice commands . . . . . 4-105
Troubleshooting guide . . . . . 4-105

## CONTROL PANEL BUTTONS — COLOR SCREEN WITH NAVIGATION SYSTEM (if so equipped)

**⚠ WARNING**

- **Positioning of the heating or air conditioning controls and display controls should not be done while driving in order that full attention may be given to the driving operation.**
- **Do not disassemble or modify this system. If you do, it may result in accidents, fire, or electrical shock.**
- **Do not use this system if you notice any abnormality, such as a frozen screen or lack of sound. Continued use of the system may result in accident, fire or electric shock.**
- **In case you notice any foreign object in the system hardware, spill liquid on it, or notice smoke or smell coming from it, stop using the system immediately and contact your nearest NISSAN dealer. Ignoring such conditions may lead to accidents, fire or electrical shock.**

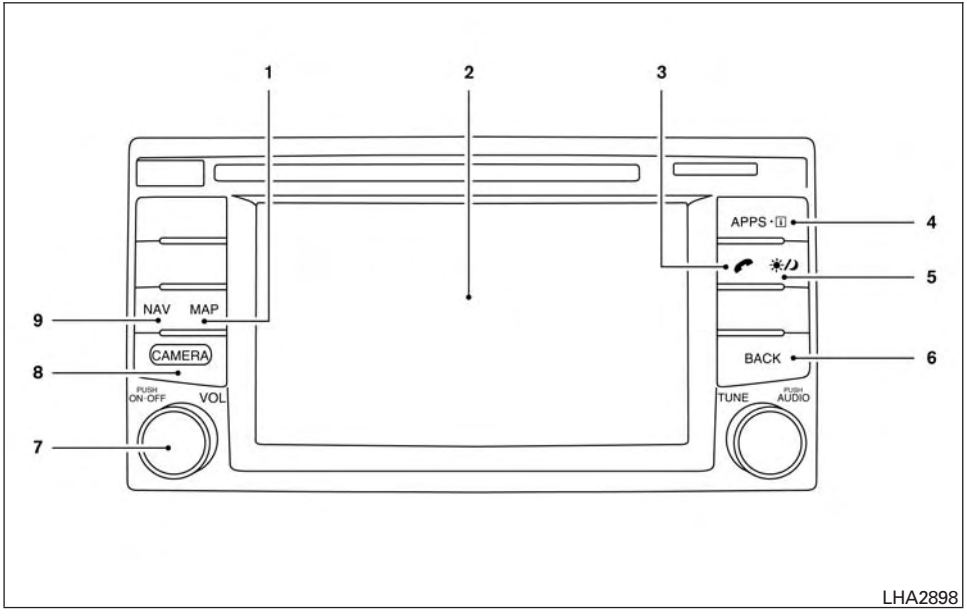


1. MAP button*
2. Display screen
3. button**
4. APPS button
5. (brightness control) button
6. BACK button
7. ON-OFF button/VOL (volume) control knob
8. CAMERA button

9. NAV button*

* For information regarding the Navigation system control buttons, refer to the separate Navigation System Owner's Manual.

** For information regarding the Bluetooth® Hands-Free Phone System control button, see "Bluetooth® Hands-Free Phone System with navigation system" or "Bluetooth® Hands-Free Phone System without navigation system" in this section.

When you use this system, make sure the engine is running.

**If you use the system with the engine not running (ignition ON or ACC) for a long time, it will discharge the battery, and the engine will not start.**

Reference symbols:

"Example" — Words marked in quotes refer to a key shown only on the display. These keys can be selected by touching the screen.

## HOW TO USE THE TOUCH-SCREEN

**⚠ CAUTION**

- **The glass display screen may break if it is hit with a hard or sharp object. If the glass screen breaks, do not touch it. Doing so could result in an injury.**
- **To clean the display, never use a rough cloth, alcohol, benzine, thinner or any kind of solvent or paper towel with a chemical cleaning agent. They will scratch or deteriorate the panel.**
- **Do not splash any liquid such as water or car fragrance on the display. Contact with liquid will cause the system to malfunction.**

To help ensure safe driving, some functions cannot be operated while driving.

The on-screen functions that are not available while driving will be "grayed out" or muted.

Park the vehicle in a safe location and then operate the navigation system.

**⚠ WARNING**

- **ALWAYS give your full attention to driving.**
- **Avoid using vehicle features that could distract you. If distracted, you could lose control of your vehicle and cause an accident.**

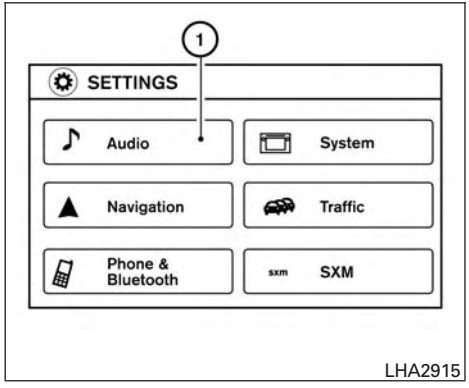


## Touch-screen operation

| Menu Item | | Result |
|---|---|---|
| Selecting the item | | Touch an item to select . To select the “Audio” key, touch the “Audio” key (1) on the screen. Touch the “BACK” key to return to the previous screen. |
| Adjusting the item | | Touch the “+” key or the “−” key to adjust the settings of an item. Touch the up arrow to scroll up the page. Touch the down arrow to scroll down the page. |
| Inputting characters | | Touch the letter or number key. There are some options available when inputting characters. |
| | 123/ABC | Changes the available character set to numbers. |
| | Space | Inserts a space. |
| | Delete | Deletes the last inputted character with one touch. Touch and hold the “Delete” key to delete all of the characters. |
| | OK | Completes the character input. |

## Touch-screen maintenance

If you clean the display screen, use a dry, soft cloth. If additional cleaning is necessary, use a small amount of neutral detergent with a soft cloth. Never spray the screen with water or detergent. Dampen the cloth first and then wipe the screen.

## HOW TO USE THE BACK BUTTON

Press the BACK button to return to the previous screen.

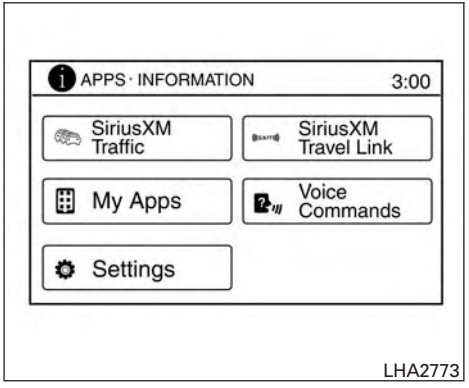

LHA2773

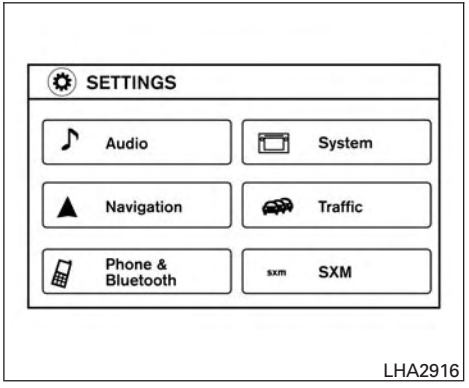

LHA2916

## HOW TO USE THE APPS – I BUTTON

For more information about the “SiriusXM Travel Link”, and “SiriusXM Traffic” features, see the separate Navigation System Owner’s Manual.

For more information about the “My Apps” key, see “NissanConnect™ App Smartphone Integration” in this section.

For more information about the “Voice Commands” key, see “NISSAN Voice Recognition System” in this section.

To select and/or adjust several functions, features and modes that are available for your vehicle:

1. Press the [ APPS ] button.
2. Touch the “Settings” key.
3. Touch the desired item.

| Menu item | | | Result |
|---|---|---|---|
| Audio | | | See “Audio system” in this section for more information. |
| Navigation | | | See the separate Navigation System Owner’s Manual for more information. |
| Phone & Bluetooth | | | See “Bluetooth Hands-Free Phone System with Navigation System” in this section. |
| System | | | Touch this key to select and/or adjust various functions of this system. A screen with additional options will appear. |
| | Display | | Touch this key to adjust the appearance of the display. |
| | | Brightness | Adjusts the brightness of the display. |
| | | Display Mode | Adjusts to fit the level of lighting in the vehicle. Touch key to cycle through options. “Day” and “Night” modes are suited for the respective times of day while “Auto” controls the display automatically. |
| | | Scroll Direction | Adjusts the direction of the menu scroll. Choose to either move up or down. |
| | Clock | | Touch this key to adjust the time. |
| | | Time Format | The clock can be set to 12 hours or 24 hours. |
| | | Date Format | Select from five possible formats of displaying the day, month, and year. |
| | | Clock Mode | Adjust the mode for the clock. “Auto” uses the system’s GPS to automatically maintain the time. “Manual” allows you to set the clock using the “Set Clock Manually” key. |
| | | Set Clock Manually | Adjust the clock manually, Touch the “+” or “-” keys to adjust the hours, minutes, day, month and year up or down. “Clock Mode” must be set to manual for this option to be available. |
| | | Daylight Savings Time | Adjusts the daylight savings time on or off. |
| | | Time Zone | Choose the applicable time zone from the list. |
| | Language | | Touch this key to change the language on the display. |
| | Camera | | Touch this key to change the camera settings. |

| Menu item | | | Result |
|---|---|---|---|
| | | Display Mode | Touch this key to select the touch-screen display mode (day, night, or automatic). |
| | | Brightness | Adjust touch-screen brightness. |
| | | Contrast | Adjust touch-screen contrast. |
| | | Color | Adjust touch-screen color. |
| | Temperature Unit | | Touch this key to change the temperature unit being displayed (Fahrenheit or Celsius). |
| | Touchscreen click | | Toggles the touch-screen click feature on or off. When activated a click sound will be heard every time a key on the screen is touched. |
| | System Beeps | | Toggle the system beep tones feature on or off. When activated, a beep sound will be heard when a pop-up message appears on the screen or a button on the unit (such as the ☼/☽ button) is pressed and held for 2 seconds. |
| | Return to Factory Settings/Clear Memory | | Touch this key to return all settings to default and to clear the memory. |
| | Software Licenses | | Touch this key to display software licensing information. |
| Traffic | | | Touch this key to display traffic settings. See the separate Navigation System Owner's Manual for more information. |
| SXM | | | Touch this key to display SXM status information. For SXM setup, refer to "Audio System" in this section. |

## ☼/☽ BUTTON

To change the display brightness, press the ☼/☽ button. Pressing the button again will change the display to the day or the night display.

If no operation is performed within 5 seconds, the display will return to the previous display.

Press and hold the ☼/☽ button for more than two seconds to turn the display off. Press the button again to turn the display on.

## HOW TO USE THE ON-OFF BUTTON/VOL (volume) CONTROL KNOB

Press the ON-OFF button to turn audio function on and off. Turn the volume control knob to adjust audio volume.

## HOW TO USE THE CAMERA BUTTON

For more information regarding the CAMERA button, see "REARVIEW MONITOR" in this section.

## REARVIEW MONITOR (if so equipped)

When the shift lever is shifted into the R (Reverse) position, the monitor display shows the view to the rear of the vehicle.

**⚠ WARNING**

**Failure to follow the warnings and instructions for proper use of the RearView Monitor could result in serious injury or death.**

- **The RearView Monitor is a convenience but it is not a substitute for proper backing. Always turn and look out the windows, and check mirrors to be sure that it is safe to move before operating the vehicle. Always back up slowly.**
- **The system is designed as an aid to the driver in showing large stationary objects directly behind the vehicle, to help avoid damaging the vehicle.**
- **The system cannot completely eliminate blind spots and may not show every object.**
- **Underneath the bumper and the corner areas of the bumper cannot be viewed on the RearView Monitor because of its monitoring range limitation. The system will not show small objects below the bumper, and may not show objects close to the bumper or on the ground.**
- **Objects viewed in the RearView Monitor differ from actual distance because a wide-angle lens is used.**
- **Objects in a RearView Monitor will appear visually opposite than when viewed in the rear view and outside mirrors.**
- **Make sure that the trunk is securely closed when backing up.**
- **Do not put anything on the rearview camera. The rearview camera is installed above the license plate.**
- **When washing the vehicle with high pressure water, be sure not to spray it around the camera. Otherwise, water may enter the camera unit causing water condensation on the lens, a malfunction, fire or an electric shock.**
- **Do not strike the camera. It is a precision instrument. Otherwise, it may malfunction or cause damage resulting in a fire or an electric shock.**

**⚠ CAUTION**

**There is a plastic cover over the camera. Do not scratch the cover when cleaning dirt or snow from the cover.**

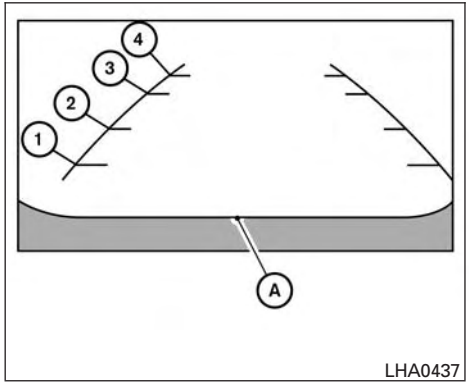

LHA0437

## HOW TO READ THE DISPLAYED LINES

Guiding lines which indicate the vehicle width and distances to objects with reference to the vehicle body line Ⓐ are displayed on the monitor.

**Distance guide lines:**

Indicate distances from the vehicle body.

- Red line ①: approx. 1.5 ft (0.5 m)
- Yellow line ②: approx. 3 ft (1 m)
- Green line ③: approx. 7 ft (2 m)
- Green line ④: approx. 10 ft (3 m)

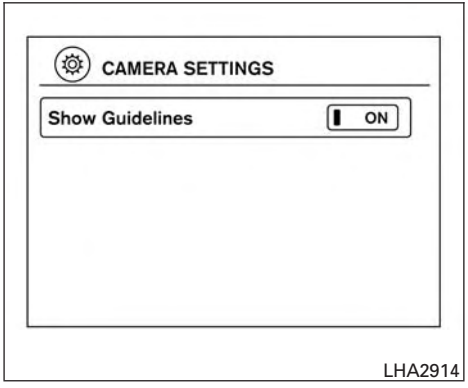

LHA2914

The on-screen guidelines can be set to on or off.

**With the shift lever in the R (Reverse) position:**

Press the CAMERA button to toggle the feature on and off.

**With the shift lever in any position other than the R (Reverse) position:**

1. Press the CAMERA button.
2. Touch the “Show Guidelines” key to toggle the feature on or off.

## DIFFERENCE BETWEEN PREDICTED AND ACTUAL DISTANCES

The distance guide line and the vehicle width guide line should be used as a reference only when the vehicle is on a level, paved surface. The distance viewed on the monitor is for reference only and may be different than the actual distance between the vehicle and displayed objects.

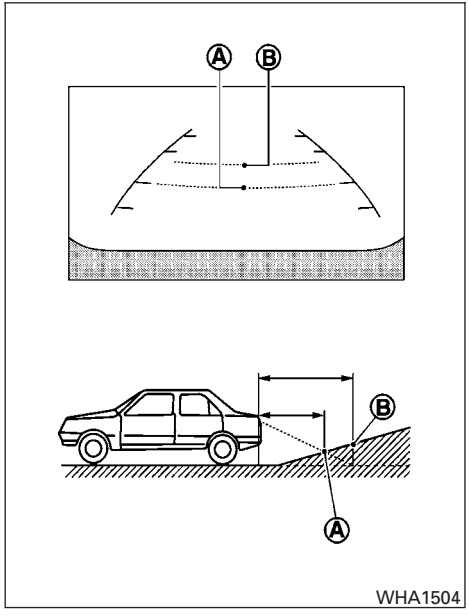


## Backing up on a steep uphill

When backing up the vehicle up a hill, the distance guide lines and the vehicle width guide lines are shown closer than the actual distance. For example, the display shows 3 ft (1.0 m) to the place Ⓐ, but the actual 3 ft (1.0 m) distance on the hill is the place Ⓑ. Note that any object on the hill is further than it appears on the monitor.

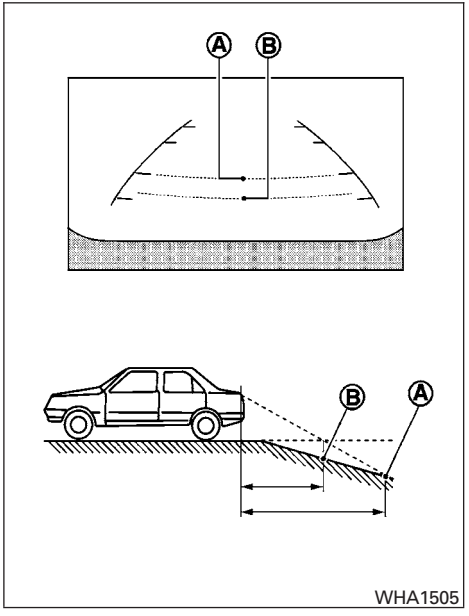


## Backing up on a steep downhill

When backing up the vehicle down a hill, the distance guide lines and the vehicle width guide lines are shown farther than the actual distance. For example, the display shows 3 ft (1.0 m) to the place Ⓐ, but the actual 3 ft (1.0 m) distance on

the hill is the place Ⓑ. Note that any object on the hill is closer than it appears on the monitor.

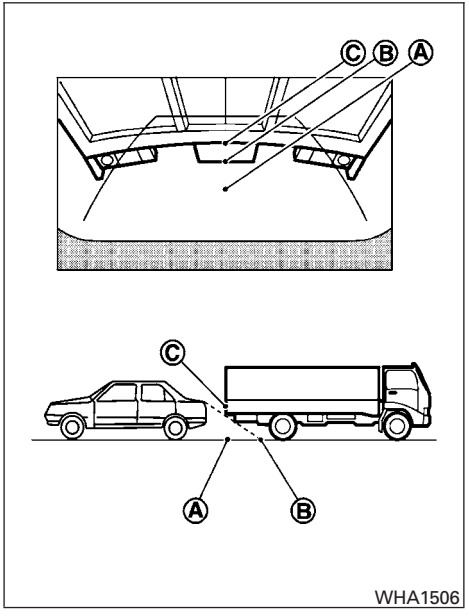


## Backing up behind a projecting object

The position Ⓒ is shown farther than the position Ⓑ in the display. However, the position Ⓒ is actually at the same distance as the position Ⓐ. The vehicle may hit the object when backing up to the position Ⓐ if the object projects over the actual backing up course.

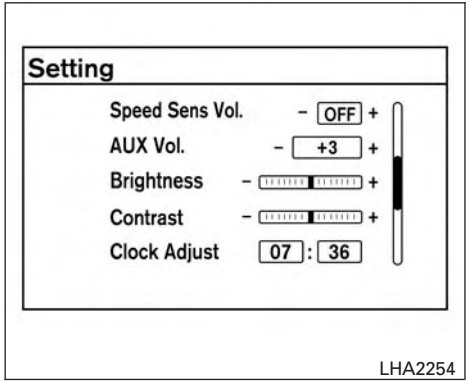


**Without Navigation System**

## ADJUSTING THE SCREEN

The procedure for adjusting the quality of the screen differs depending on the type of screen present on the vehicle.

For vehicles without Navigation System:

1. Press the ENTER/SETTING button.
2. Turn the TUNE-SCROLL knob to highlight the “Brightness” or “Contrast” key.
3. Press the ENTER/SETTING button.
4. Adjust the level using the TUNE-SCROLL knob and then press the ENTER/SETTING button to apply the adjustment.

- Do not adjust the Brightness or Contrast of the RearView Monitor while the vehicle is moving.

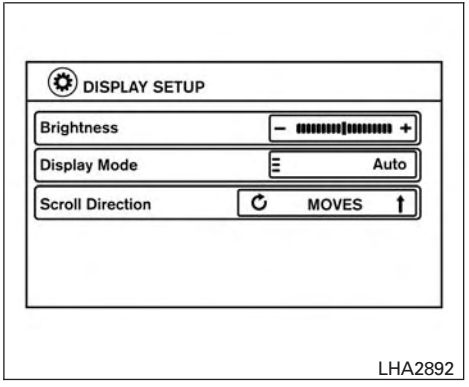


**With Navigation System**

For vehicles with Navigation System:

1. Press the [ APPS ] button.
2. Touch the “Settings” key.
3. Touch the “System” key.
4. Touch the “Display” key.
5. Touch the “Brightness” key and adjust the level to the desired setting.

- Do not adjust the display of the RearView Monitor while the vehicle is moving.

## OPERATING TIPS

**⚠ CAUTION**

- **Do not use alcohol, benzine or thinner to clean the camera. This will cause discoloration. To clean the camera, wipe with a cloth dampened with a diluted mild cleaning agent and then wipe with a dry cloth.**
- **Do not damage the camera as the monitor screen may be adversely affected.**

- When the shift lever is shifted to R (Reverse), the monitor screen automatically changes to the RearView Monitor mode. However, the radio can be heard.
- It may take some time until the RearView Monitor is displayed after the shift lever has been shifted to R (Reverse). Objects may be distorted momentarily until the RearView Monitor screen is displayed completely. When the shift lever is returned to a position other than R (Reverse), it may take some time until the screen changes. Objects on the screen may be distorted until they are completely displayed.
- When the temperature is extremely high or low, the screen may not clearly display objects. This is not a malfunction.
- When strong light directly enters the camera, objects may not be displayed clearly.
- Vertical lines may be seen in objects on the screen. This is due to strong reflected light from the bumper. This is not a malfunction.
- The screen may flicker under fluorescent light. This is not a malfunction.
- The colors of objects on the RearView Monitor may differ somewhat from those of the actual object.
- When the contrast of objects is low at night, pressing the SETTING button or [APPS] button may not change the brightness.
- Objects on the monitor may not be clear in a dark place or at night.
- If dirt, rain or snow attaches to the camera, the RearView Monitor may not display objects. Clean the camera.
- Do not use body wax on the camera window. If body wax does get on the camera window, wipe off the wax with a clean cloth dampened with mild detergent diluted with water.

## VENTS

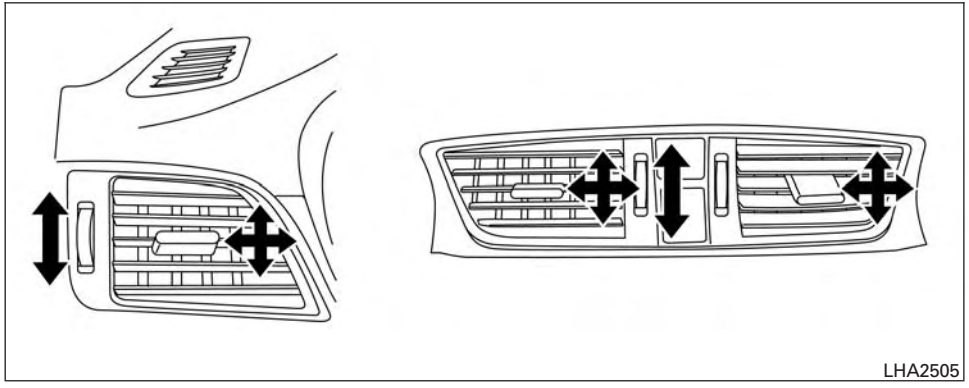


Adjust air flow direction by moving the vent slides.

Open or close the vents by using the dial. Move the dial toward the ⩸ to open the vents or toward the ⊠ to close them.

## HEATER AND AIR CONDITIONER (manual) (if so equipped)

**⚠ WARNING**

- **The air conditioner cooling function operates only when the engine is running.**
- **Do not leave children or adults who would normally require the assistance of others alone in your vehicle. Pets should also not be left alone. They could accidentally injure themselves or others through inadvertent operation of the vehicle. Also, on hot, sunny days, temperatures in a closed vehicle could quickly become high enough to cause severe or possibly fatal injuries to people or animals.**
- **Do not use the recirculation mode for long periods as it may cause the interior air to become stale and the windows to fog up.**

**NOTE:**

- Odors from inside and outside the vehicle can build up in the air conditioner unit. Odor can enter the passenger compartment through the vents.
- When parking, set the heater and air conditioner controls to turn off air recirculation to allow fresh air into the passenger compartment. This should help reduce odors inside the vehicle.

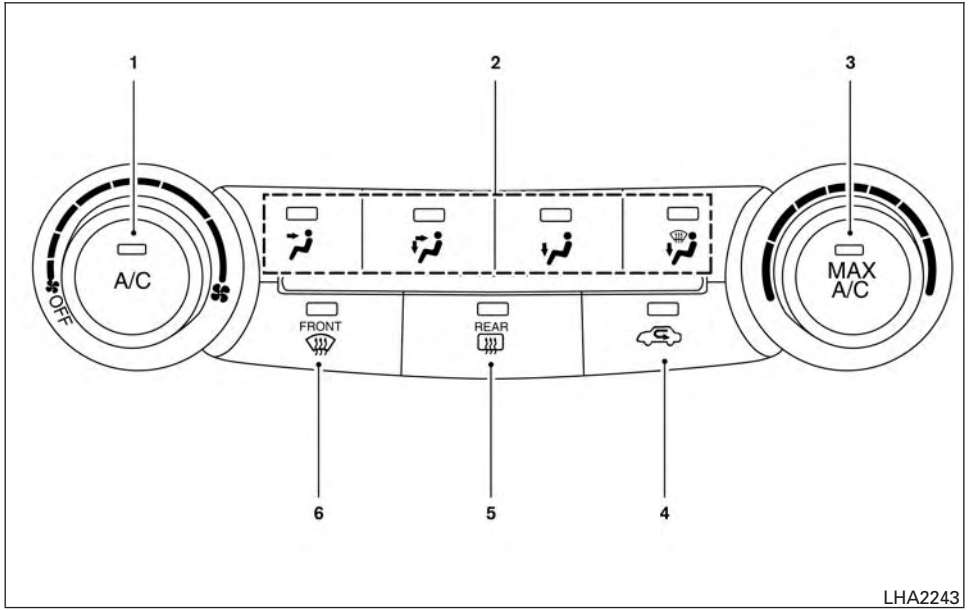


1. Fan speed control / system OFF dial / air conditioning (A/C) button (if so equipped)
2. Air flow control buttons
3. Temperature control dial / MAX A/C button
4. Air recirculation button
5. Rear window defroster button
6. Front windshield defrost button

## CONTROLS

### Fan control dial

The fan control dial turns the fan on and off, and controls fan speed.

### Air flow control buttons

The air flow control buttons allow you to select the air flow outlets.

MAX A/C — Air flows from center and side vents with maximum cooling.

— Air flows from center and side vents.

— Air flows from center and side vents and foot outlets.

— Air flows mainly from foot outlets.

— Air flows from defroster outlets and foot outlets.

— Air flows mainly from defroster outlets.

### Temperature control dial

The temperature control dial allows you to adjust the temperature of the outlet air. To lower the temperature, turn the dial to the left. To increase the temperature, turn the dial to the right.

## Air recirculation button

**On position (Indicator light on):**
Interior air is recirculated inside the vehicle.

Press the button to the ON position when:

- driving on a dusty road.
- to prevent traffic fumes from entering passenger compartment.
- for maximum cooling when using the air conditioner.

The air recirculation function does not operate when in the or air flow modes.

**Off position (Indicator light off):**
Outside air is drawn into the passenger compartment and distributed through the selected outlet.

Use the off position for normal heater or air conditioner operation.

## A/C Air conditioner button (if so equipped)

Start the engine, turn the fan control dial to the desired position and press the A/C button to turn on the air conditioner. The indicator light comes on when the air conditioner is operating. To turn off the air conditioner, press the A/C button again.

**The air conditioner cooling function operates only when the engine is running.**

## Rear window and outside mirror (if so equipped) defroster switch

For more information about the rear window and outside mirror (if so equipped) defroster switch, see “Rear window and outside mirror (if so equipped) defroster switch” in the “Instruments and controls” section of this manual.

# HEATER OPERATION

## Heating

This mode is used to direct heated air to the foot outlets. Some air also flows from the defrost outlets and the side vent outlets.

1. Press the button to the OFF position for normal heating.
2. Press the air flow control button.
3. Turn the fan control dial to the desired position.
4. Turn the temperature control dial to the desired position between the middle and the hot position.

## Ventilation

This mode directs outside air to the side and center vents.

1. Press the button to the OFF position.
2. Press the air flow control button.
3. Turn the fan control dial to the desired position.
4. Turn the temperature control dial to the desired position.

## Defrosting or defogging

This mode directs the air to the defrost outlets to defrost/defog the windows.

1. Press the defrost/defog button .
2. Turn the fan control dial to the desired position.
3. Turn the temperature control dial to the desired position between the middle and the hot position.

- To quickly remove ice or fog from the windows, turn the fan control dial to the highest setting and the temperature control to the full HOT position.

- When the position is selected, the air conditioner automatically turns on (the indicator light on the A/C button will remain in Off) if the outside temperature is more than 36°F (2°C). This dehumidifies the air which helps defog the windshield. The mode automatically turns off, allowing outside air to be drawn into the passenger compartment to further improve the defogging performance. The recirculation mode cannot be activated in the position.

## Bi-level heating

The bi-level mode directs warmed air to the side and center vents and to the front and rear floor outlets.

1. Press the button to the OFF position.
2. Press the air flow control button.
3. Turn the fan control dial to the desired position.
4. Turn the temperature control dial to the desired position.

## Heating and defogging

This mode heats the interior and defogs the windshield.

1. Press the air flow control button.
2. Turn the fan control dial to the desired position.
3. Turn the temperature control dial to the desired position between the middle and the hot position.

- When the position is selected, the air conditioner automatically turns on if the outside temperature is more than 36°F (2°C). The indicator light on the A/C button will remain in Off. This dehumidifies the air which helps defog the windshield. The mode automatically turns off, allowing outside air to be drawn into the passenger compartment to further improve the defogging performance.

## Operating tips

**Clear snow and ice from the wiper blades and air inlet in front of the windshield. This improves heater operation.**

# AIR CONDITIONER OPERATION (if so equipped)

Start the engine, turn the fan control dial to the desired position, and press the A/C button to activate the air conditioner. When the air conditioner is on, cooling and dehumidifying functions are added to the heater operation.

**The air conditioner cooling function operates only when the engine is running.**

## Cooling

This mode is used to cool and dehumidify the air.

1. Press the button to the OFF position.
2. Press the air flow control button.
3. Turn the fan control dial to the desired position.
4. Press the A/C button. The indicator light comes on.
5. Turn the temperature control dial to the desired position.

- For quick cooling when the outside temperature is high, push the button to the ON position. Be sure to return the to the OFF position for normal cooling. MAX A/C may be used for quick cooling.

## Dehumidified heating

This mode is used to heat and dehumidify the air.

1. Press the button to the OFF position.
2. Press the air flow control button.
3. Turn the fan control dial to the desired position.

4. Press the A/C button. The indicator light comes on.
5. Turn the temperature control dial to the desired position.

## Dehumidified defogging

This mode is used to defog the windows and dehumidify the air.

1. Press the air flow control button.
2. Turn the fan control dial to the desired position.

- When the or are selected, the air conditioner automatically turns on (the indicator light may not illuminate) if the outside temperature is more than 36°F (2°C). This dehumidifies the air which helps defog the windshield. The mode automatically turns off, allowing outside air to be drawn into the passenger compartment to further improve the defogging performance.
- The air conditioner is always on in mode, regardless of whether the indicator light is on or off.

3. Turn the temperature control dial to the desired position.

## Operating tips

- Keep the windows and moonroof closed while the air conditioner is in operation.
- After parking in the sun, drive for 2 or 3 minutes with the windows open to vent hot air from the passenger compartment. Then, close the windows. This allows the air conditioner to cool the interior more quickly.
- **The air conditioning system should be operated for approximately 10 minutes at least once a month. This helps prevent damage to the system due to lack of lubrication.**
- A visible mist may be seen coming from the ventilators in hot, humid conditions as the air is cooled rapidly. This does not indicate a malfunction.
- **If the engine coolant temperature gauge indicates engine coolant temperature over the normal range, turn the air conditioner off. See "If your vehicle overheats" in the "In case of emergency" section of this manual.**

## AIR FLOW CHARTS

The following charts show the button and dial positions for **MAXIMUM AND QUICK** heating, cooling or defrosting. **The air recirculation button should always be in the OFF position for heating and defrosting.**

## Defrosting/ Defogging

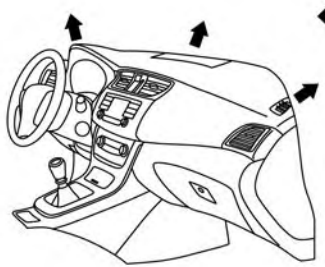


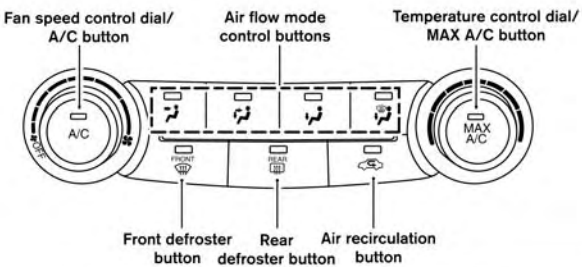


| Fan control | Air recirculation button | A/C button | Temp. control | Air flow control |
|---|---|---|---|---|
| HI | OFF | Turns on automatically (indicator may or may not turn on) | HOT (RIGHT) | |

LHA2511

## Bi-level Heating

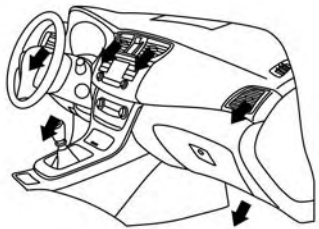


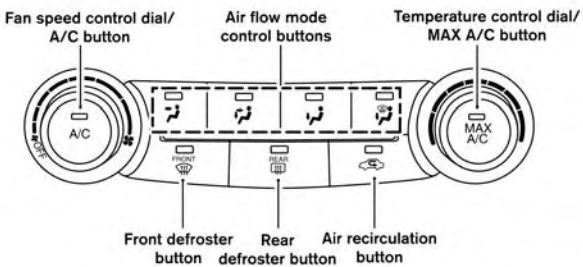


| Fan control | Air recirculation button | A/C button | Temp. control | Air flow control |
|---|---|---|---|---|
| HI | OFF | OFF | HOT (RIGHT) | |

LHA2512

## Heating

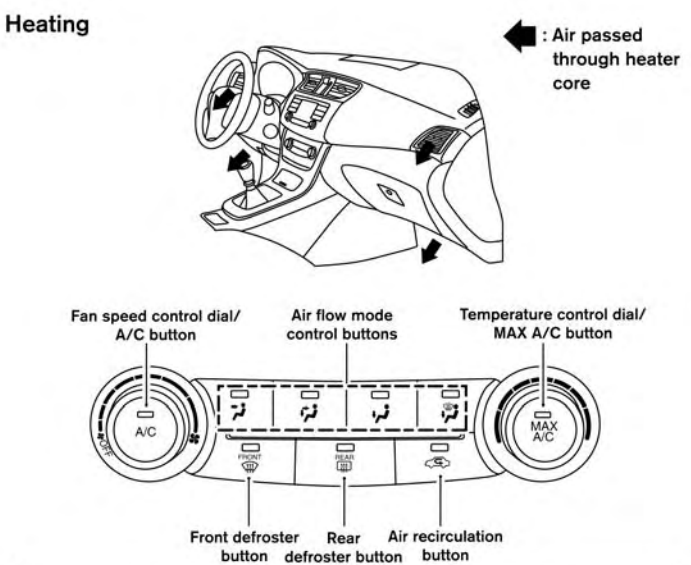


| Fan control | Air recirculation button | A/C button | Temp. control | Air flow control |
|---|---|---|---|---|
| HI | OFF | OFF | HOT (RIGHT) | |

LHA2513

## Heating & Defrosting/ Defogging

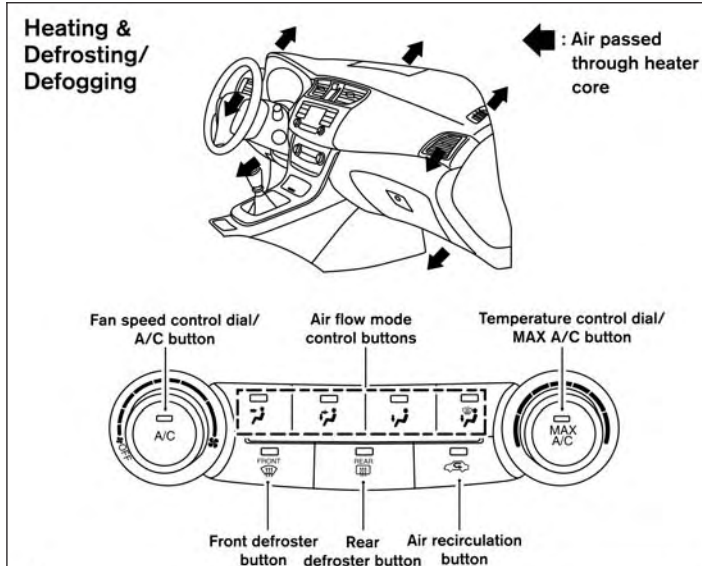


| Fan control | Air recirculation button | A/C button | Temp. control | Air flow control |
|---|---|---|---|---|
| HI | OFF | Turns on automatically (indicator may or may not turn on) | HOT (RIGHT) | |

LHA2514

## Cooling

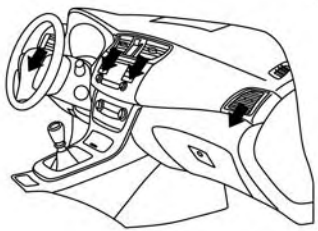

: Air not passed through heater core

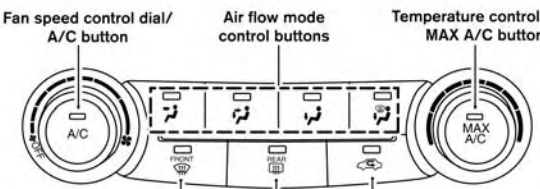


| Fan control | Air recirculation button | A/C button | Temp. control | Air flow control |
|---|---|---|---|---|
| HI | ON | ON | COLD (LEFT) | MAX A/C |

LHA2515

## HEATER AND AIR CONDITIONER (automatic) (if so equipped)

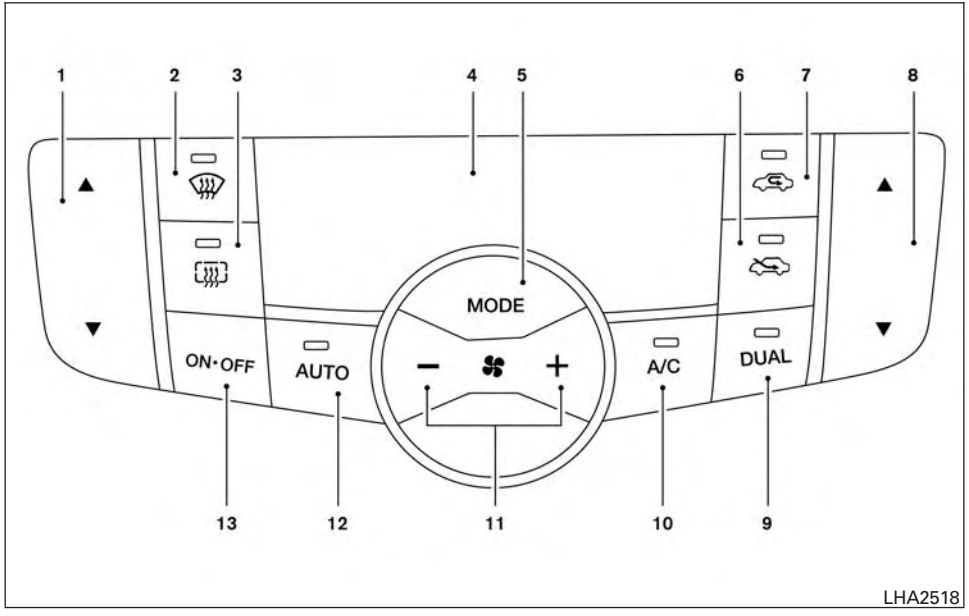


1. Temperature control buttons (driver's side)
2. (front defroster) button
3. (rear window defroster) button
4. Display screen
5. MODE (manual air flow control) button
6. Fresh air intake button
7. Air recirculation button
8. Temperature control buttons (passenger's side)
9. DUAL button
10. A/C (air conditioner) button
11. (fan speed control) buttons
12. AUTO (automatic) button
13. ON-OFF button

**⚠ WARNING**

- **The air conditioner cooling function operates only when the engine is running.**
- **Do not leave children or adults who would normally require the assistance of others alone in your vehicle. Pets should also not be left alone. They could accidentally injure themselves or others through inadvertent operation of the vehicle. Also, on hot, sunny days, temperatures in a closed vehicle could quickly become high enough to cause severe or possibly fatal injuries to people or animals.**
- **Do not use the recirculation mode for long periods as it may cause the interior air to become stale and the windows to fog up.**

Start the engine and operate the controls to activate the air conditioner.

**NOTE:**

- Odors from inside and outside the vehicle can build up in the air conditioner unit. Odor can enter the passenger compartment through the vents.
- When parking, set the heater and air conditioner controls to turn off air recirculation to allow fresh air into the passenger compartment. This should help reduce odors inside the vehicle.

## AUTOMATIC OPERATION

### Heating (A/C OFF)

The air conditioner does not activate. When you need to heat only, use this mode.

1. Press the A/C button. (A/C OFF will be displayed and A/C indicator will turn off.)
2. Use the temperature control buttons to set the desired temperature.

- The temperature of the passenger compartment will be maintained automatically. Air flow distribution and fan speed are also controlled automatically.
- Do not set the temperature lower than the outside air temperature or the system may not work properly.
- Not recommended if windows fog up.

### Dehumidified defrosting or defogging

1. Press the front defroster button on. (The indicator light on the button will remain in Off.)
2. Use the temperature control buttons to set the desired temperature.

- To quickly remove ice from the outside of the windows, use the fan speed control dial to set the fan speed to maximum.
- As soon as possible after the windshield is clean, press the AUTO button to return to the automatic mode.
- When the front defroster button is pressed, the air conditioner will automatically be turned on at outside temperatures above 36°F (2°C) (The indicator light may not illuminate). The air recirculate mode automatically turns off, allowing outside air to be drawn into the passenger compartment to further improve the defogging performance.

### Cooling and/or dehumidified heating (AUTO)

This mode may be used all year round as the system automatically works to keep a constant temperature. Air flow distribution and fan speed are also controlled automatically.

1. Press the AUTO button on. (The indicator on the button will illuminate and AUTO will be displayed.)
2. Use the temperature control buttons to set the desired temperature.

- Adjust the temperature display to about 75°F (24°C) for normal operation.
- The temperature of the passenger compartment will be maintained automatically. Air flow distribution and fan speed are also controlled automatically.
- A visible mist may be seen coming from the vents in hot, humid conditions as the air is cooled rapidly. This does not indicate a malfunction.

3. You can individually set driver's and front passenger's side temperature using each set of temperature control buttons. When the DUAL button or passenger's side temperature control buttons are pressed, the DUAL indicator will come on. To turn off the passenger's side temperature control, press the DUAL button.

## MANUAL OPERATION

### Fan speed control

Press the fan control buttons to manually control the fan speed.

Press the AUTO button to return to automatic control of the fan speed.

### Air recirculation

Press the air recirculation button to recirculate interior air inside the vehicle. The indicator light on the button will come on.

The air recirculation cannot be activated when the air conditioner is in the front defrosting mode or the front defrosting and foot outlet mode.

### Fresh air intake

Press the fresh air intake button to draw outside air into the passenger compartment. The indicator light on the button will come on.

### Automatic intake air control

In the AUTO mode, the intake air will be controlled automatically. To manually control the intake air, press the air recirculation button. To return to the automatic control mode, press and hold the air recirculation button or press and hold the fresh air intake button for about 2 seconds. The indicator lights (both air recirculation and fresh air intake buttons) will flash twice, and then the intake air will be controlled automatically.

### Air flow control

Pressing the MODE button manually controls air flow and selects the air outlet:

- — Air flows from center and side vents.
- — Air flows from center and side vents and foot outlets.
- — Air flows mainly from foot outlets.
- — Air flows from defroster and foot outlets.

### To turn system off

Press the OFF button.

### Rear window and outside mirror (if so equipped) defroster switch

For more information about the rear window and outside mirror (if so equipped) defroster switch, see “Rear window and outside mirror (if so equipped) defroster switch” in the “Instruments and controls” section of this manual.

## OPERATING TIPS

- When the engine coolant temperature and outside air temperature are low, the air flow from the foot outlets may not operate for a maximum of 150 seconds. However, this is not a malfunction. After the coolant temperature warms up, air flow from the foot outlets will operate normally.

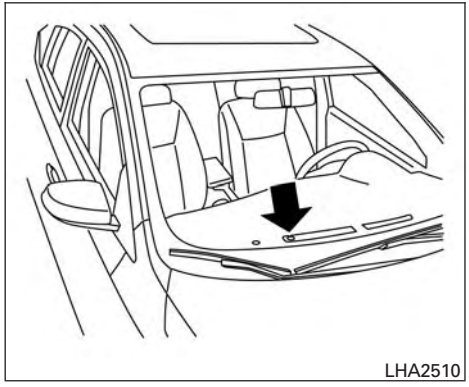


The sunload sensor (if so equipped), located on the top passenger's side of the instrument panel, helps the system maintain a constant temperature. Do not put anything on or around this sensor.

## SERVICING AIR CONDITIONER (if so equipped)

The air conditioner system in your NISSAN vehicle is charged with a refrigerant designed with the environment in mind.

**This refrigerant does not harm the earth's ozone layer.**

Special charging equipment and lubricant is required when servicing your NISSAN air conditioner. Using improper refrigerants or lubricants will cause severe damage to your air conditioner system. See "Air conditioner system refrigerant and oil recommendations" in the "Technical and consumer information" section of this manual.

A NISSAN dealer is able to service your "environmentally friendly" air conditioning system.

**⚠ WARNING**

**The air conditioner system contains refrigerant under high pressure. To avoid personal injury, any air conditioner service should be done only by an experienced technician with proper equipment.**

## AUDIO SYSTEM

### RADIO

With the ignition placed in the ACC or ON position, press the PWR (power)/VOL (volume) knob to turn the radio on. If you listen to the radio with the engine not running, the ignition should be placed in the ACC position.

Radio reception is affected by station signal strength, distance from radio transmitter, buildings, bridges, mountains and other external influences. Intermittent changes in reception quality normally are caused by these external influences.

**Using a cellular phone in or near the vehicle may influence radio reception quality.**

#### Radio reception

Your NISSAN radio system is equipped with state-of-the-art electronic circuits to enhance radio reception. These circuits are designed to extend reception range, and to enhance the quality of that reception.

However, there are some general characteristics of both FM and AM radio signals that can affect radio reception quality in a moving vehicle, even when the finest equipment is used. These characteristics are completely normal in a given reception area and do not indicate any malfunction in your NISSAN radio system.

Reception conditions will constantly change because of vehicle movement. Buildings, terrain, signal distance and interference from other vehicles can work against ideal reception. Described below are some of the factors that can affect your radio reception.

Some cellular phones or other devices may cause interference or a buzzing noise to come from the audio system speakers. Storing the device in a different location may reduce or eliminate the noise.

## FM RADIO RECEPTION

Range: FM range is normally limited to 25 – 30 mi (40 – 48 km), with monaural (single channel) FM having slightly more range than stereo FM. External influences may sometimes interfere with FM station reception even if the FM station is within 25 mi (40 km). The strength of the FM signal is directly related to the distance between the transmitter and receiver. FM signals follow a line-of-sight path, exhibiting many of the same characteristics as light. For example, they will reflect off objects.

Fade and drift: As your vehicle moves away from a station transmitter, the signals will tend to fade and/or drift.

Static and flutter: During signal interference from buildings, large hills or due to antenna position (usually in conjunction with increased distance from the station transmitter), static or flutter can be heard. This can be reduced by adjusting the treble control to reduce treble response.

Multipath reception: Because of the reflective characteristics of FM signals, direct and reflected signals reach the receiver at the same time. The signals may cancel each other, resulting in momentary flutter or loss of sound.

## AM RADIO RECEPTION

AM signals, because of their low frequency, can bend around objects and skip along the ground. In addition, the signals can be bounced off the ionosphere and bent back to earth. Because of these characteristics, AM signals are also subject to interference as they travel from transmitter to receiver.

Fading: Occurs while the vehicle is passing through freeway underpasses or in areas with many tall buildings. It can also occur for several seconds during ionospheric turbulence even in areas where no obstacles exist.

Static: Caused by thunderstorms, electrical power lines, electric signs and even traffic lights.

## SATELLITE RADIO RECEPTION (if so equipped)

When the satellite radio is used for the first time or the battery has been replaced, the satellite radio may not work properly. This is not a malfunction. Wait more than 10 minutes with satellite radio ON and the vehicle outside of any metal or large building for satellite radio to receive all of the necessary data.

No satellite radio reception is available and “NO SAT” is displayed when the SAT band option is selected unless optional satellite receiver and antenna are installed and a SiriusXM® Satellite Radio service subscription is active. Satellite radio is not available in Alaska, Hawaii and Guam.

Satellite radio performance may be affected if cargo carried on the roof blocks the satellite radio signal.

If possible, do not put cargo over the satellite antenna.

A build up of ice on the satellite radio antenna can affect satellite radio performance. Remove the ice to restore satellite radio reception.

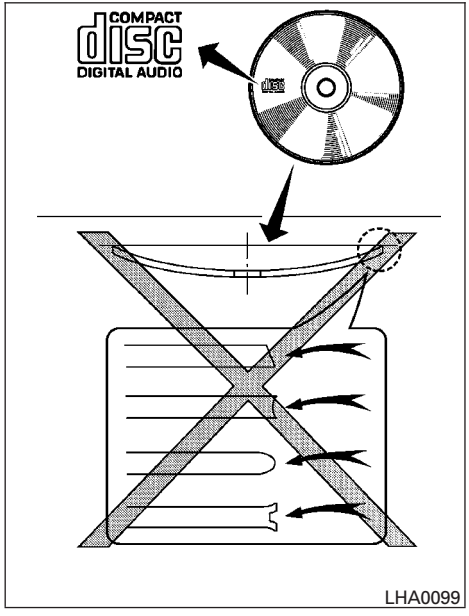


AUDIO OPERATION PRECAUTIONS

## Compact disc (CD) player

**⚠ CAUTION**

- **Do not force a compact disc into the CD insert slot. This could damage the CD and/or CD player.**
- **Trying to load a CD with the CD door closed could damage the CD and/or CD player.**
- **Only one CD can be loaded into the CD player at a time.**

- **Only use high quality 4.7 in (12 cm) round discs that have the "COMPACT disc DIGITAL AUDIO" logo on the disc or packaging.**
- **During cold weather or rainy days, the player may malfunction due to the humidity. If this occurs, remove the CD and dehumidify or ventilate the player completely.**
- **The player may skip while driving on rough roads.**
- **The CD player sometimes cannot function when the compartment temperature is extremely high or low. Decrease/increase the temperature before use.**
- **Do not expose the CD to direct sunlight.**
- **CDs that are in poor condition or are dirty, scratched or covered with fingerprints may not work properly.**
- **The following CDs may not work properly:**
  - **Copy control compact discs (CCCD)**
  - **Recordable compact discs (CD-R)**
  - **Rewritable compact discs (CD-RW)**
- **Do not use the following CDs as they may cause the CD player to malfunction:**
  - **3.1 in (8 cm) discs with an adapter**
  - **CDs that are not round**
  - **CDs with a paper label**
  - **CDs that are warped, scratched, or have abnormal edges**
- **This audio system can only play prerecorded CDs. It has no capability to record or burn CDs.**
- **If the CD cannot be played, one of the following messages will be displayed.**

**CHECK DISC:**

- **Confirm that the CD is inserted correctly (the label side is facing up, etc.).**
- **Confirm that the CD is not bent or warped and it is free of scratches.**

**PRESS EJECT:**

**This is an error due to excessive temperature inside the player. Remove the CD by pressing the EJECT button. After a short time, reinsert the CD. The CD can be played when the temperature of the player returns to normal.**

**UNPLAYABLE:**

**The file is unplayable in this audio system (only MP3 or WMA (if so equipped) CD).**

## Compact disc with MP3 or WMA

**Terms:**

- MP3 — MP3 is short for Moving Pictures Experts Group Audio Layer 3. MP3 is the most well-known compressed digital audio file format. This format allows for near "CD quality" sound, but at a fraction of the size of normal audio files. MP3 conversion of an audio track from CD-ROM can reduce the file size by approximately a 10:1 ratio with virtually no perceptible loss in quality. MP3 compression removes the redundant and irrelevant parts of a sound signal that the human ear doesn't hear.
- WMA — Windows Media Audio (WMA)* is a compressed audio format created by Microsoft as an alternative to MP3. The WMA codec offers greater file compression than the MP3 codec, enabling storage of more digital audio tracks in the same amount of space when compared to MP3s at the same level of quality.
- Bit rate — Bit rate denotes the number of bits per second used by a digital music file. The size and quality of a compressed digital audio file is determined by the bit rate used when encoding the file.
- Sampling frequency — Sampling frequency is the rate at which the samples of a signal are converted from analog to digital (A/D conversion) per second.
- Multisession — Multisession is one of the methods for writing data to media. Writing data once to the media is called a single session, and writing more than once is called a multisession.
- ID3/WMA Tag — The ID3/WMA tag is the part of the encoded MP3 or WMA file that contains information about the digital music file such as song title, artist, encoding bit rate, track time duration, etc. ID3 tag information is displayed on the Artist/song title line on the display.

* Windows® and Windows Media® are registered trademarks and trademarks in the United States of America and other countries of Microsoft Corporation of the USA.

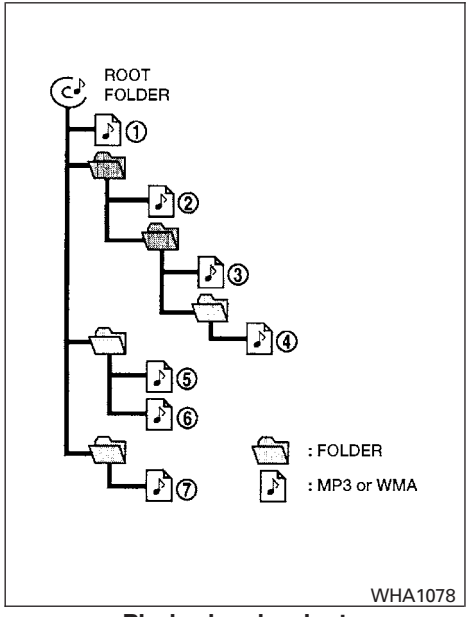


**Playback order chart**

**Playback order:**

Music playback order of a CD with MP3 or WMA files is as illustrated.

- The names of folders not containing MP3 or WMA files are not shown in the display.
- If there is a file in the top level of the disc, “Root Folder” is displayed.
- The playback order is the order in which the files were written by the writing software. Therefore, the files might not play in the desired order.

**Specification chart:**

| | | | |
|---|---|---|---|
| Supported media | | | CD, CD-R, CD-RW |
| Supported file systems | | | ISO9660 LEVEL1, ISO9660 LEVEL2, Apple ISO, Romeo, Joliet * ISO9660 Level 3 (packet writing) is not supported. |
| Supported versions*1 | MP3 | Version | MPEG1, MPEG2, MPEG2.5 |
| | | Sampling frequency | 8 kHz - 48 kHz |
| | | Bit rate | 8 kbps - 320 kbps, VBR |
| | WMA | Version | WMA7, WMA8, WMA9 |
| | | Sampling frequency | 32 kHz - 48 kHz |
| | | Bit rate | 48 kbps - 192 kbps, VBR |
| Tag information | | | ID3 tag VER1.0, VER1.1, VER2.2, VER2.3 (MP3 only) |
| Folder levels | | | Folder levels: 8, Max folders: 255 (including root folder), Files: 512 (Max. 255 files for one folder) |
| Text character number limitation | | | 128 characters |
| Displayable character codes*2 | | | 01: ASCII, 02: ISO-8859-1, 03: UNICODE (UTF-16 BOM Big Endian), 04: UNICODE (UTF-16 Non-BOM Big Endian), 05: UNICODE (UTF-8), 06: UNICODE (Non-UTF-16 BOM Little Endian) |

*1 Files created with a combination of 48 kHz sampling frequency and 64 kbps bit rate cannot be played.

*2 Available codes depend on what kind of media, versions and information are going to be displayed.

**Troubleshooting guide:**

| Symptom | Cause and Countermeasure |
|---|---|
| Cannot play | Check if the disc was inserted correctly. |
| | Check if the disc is scratched or dirty. |
| | Check if there is condensation inside the player. If there is, wait until the condensation is gone (about 1 hour) before using the player. |
| | If there is a temperature increase error, the CD player will play correctly after it returns to the normal temperature. |
| | If there is a mixture of music CD files (CD-DA data) and MP3/WMA files on a CD, only the music CD files (CD-DA data) will be played. |
| | Files with extensions other than ".MP3",".WMA", ".mp3" or ".wma" cannot be played. In addition, the character codes and number of characters for folder names and file names should be in compliance with the specifications. |
| | Check if the finalization process, such as session close and disc close, is done for the disc. |
| | Check if the disc is protected by copyright. |
| Poor sound quality | Check if the disc is scratched or dirty. |
| | Bit rate may be too low. |
| It takes a relatively long time before the music starts playing. | If there are many folders or file levels on the MP3/WMA disc, or if it is a multisession disc, some time may be required before the music starts playing. |
| Music cuts off or skips | The writing software and hardware combination might not match, or the writing speed, writing depth, writing width, etc., might not match the specifications. Try using the slowest writing speed. |
| Skipping with high bit rate files | Skipping may occur with large quantities of data, such as for high bit rate data. |
| Moves immediately to the next song when playing | When a non-MP3/WMA file has been given an extension of ".MP3", ".WMA", ."mp3"or ".wma", or when play is prohibited by copyright protection, there will be approximately 5 seconds of no sound and then the player will skip to the next song. |
| Songs do not play back in the desired order | The playback order is the order in which the files were written by the writing software. Therefore, the files might not play in the desired order. |

## USB (Universal Serial Bus) Connection Port (if so equipped)

**⚠ WARNING**

**Do not connect, disconnect or operate the USB device while driving. Doing so can be a distraction. If distracted you could lose control of your vehicle and cause an accident or serious injury.**

**⚠ CAUTION**

- **Do not force the USB device into the USB port. Inserting the USB device tilted or up-side-down into the port may damage the port. Make sure that the USB device is connected correctly into the USB port.**
- **Do not grab the USB port cover (if so equipped) when pulling the USB device out of the port. This could damage the port and the cover.**
- **Do not leave the USB cable in a place where it can be pulled unintentionally. Pulling the cable may damage the port.**

The vehicle is not equipped with a USB device. USB devices should be purchased separately as necessary.

This system cannot be used to format USB devices. To format a USB device, use a personal computer.

In some states/area, the USB device for the front seats plays only sound without images for regulatory reasons, even when the vehicle is parked.

This system supports various USB memory devices, USB hard drives and iPod® players. Some USB devices may not be supported by this system.

- Partitioned USB devices may not play correctly.
- Some characters used in other languages (Chinese, Japanese, etc.) may not appear properly in the display. Using English language characters with a USB device is recommended.

**General notes for USB use:**

- Refer to your device manufacturer's owner information regarding the proper use and care of the device.

**Notes for iPod® use:**

iPod® is a trademark of Apple Inc., registered in the U.S. and other countries.

- Improperly plugging in the iPod® may cause a checkmark to be displayed on and off (flickering). Always make sure that the iPod® is connected properly.
- An iPod® nano (1st Generation) may remain in fast forward or rewind mode if it is connected during a seek operation. In this case, please manually reset the iPod®.
- An iPod® nano (2nd Generation) will continue to fast-forward or rewind if it is disconnected during a seek operation.
- An incorrect song title may appear when the Play Mode is changed while using an iPod® nano (2nd Generation).
- Audiobooks may not play in the same order as they appear on an iPod®.
- Large video files cause slow responses in an iPod®. The vehicle center display may momentarily black out, but will soon recover.
- If an iPod® automatically selects large video files while in the shuffle mode, the vehicle center display may momentarily black out, but will soon recover.

## Bluetooth® streaming audio (if so equipped)

- Some Bluetooth® audio devices may not be recognized by the in-vehicle audio system.
- It is necessary to set up the wireless connection between a compatible Bluetooth® audio device and the in-vehicle Bluetooth® module before using the Bluetooth® audio.
- Operating procedure of the Bluetooth® audio will vary depending on the devices. Make sure how to operate your audio device before using it with this system.
- The Bluetooth® audio may be stopped under the following conditions:
  - Receiving a call on the Hands-Free Phone System.
  - Checking the connection to the hands-free phone.
- Do not place the Bluetooth® audio device in an area surrounded by metal or far away from the in-vehicle Bluetooth® module to prevent tone quality degradation and wireless connection disruption.
- While an audio device is connected through the Bluetooth® wireless connection, the battery power of the device may discharge quicker than usual.
- This system supports the Bluetooth® Audio Distribution Profile (A2DP, AVRCP).

Bluetooth®

BLUETOOTH® is a trademark owned by Bluetooth SIG, Inc. and licensed to Visteon and Bosch.

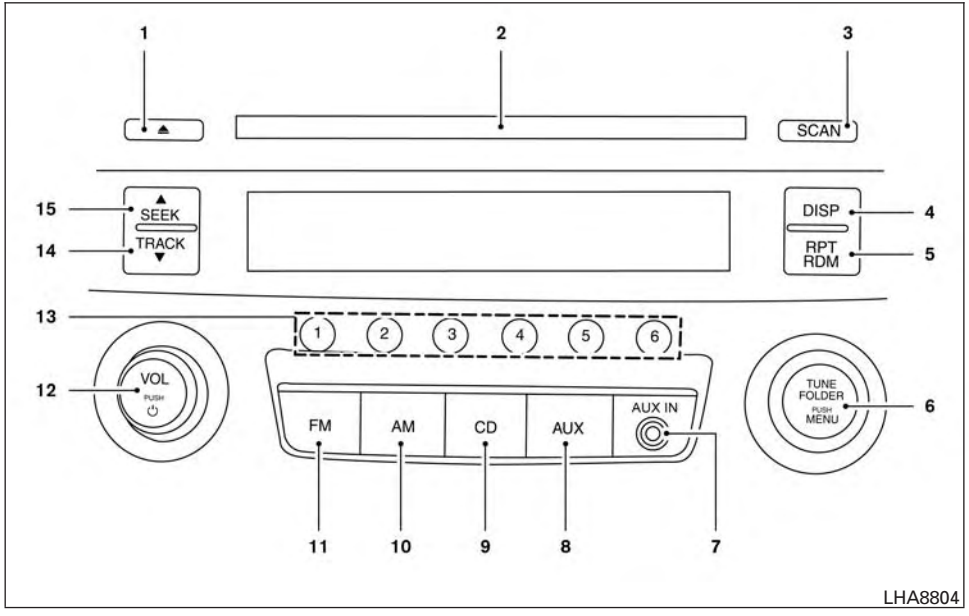


1. ⏏ CD eject button
2. CD insert slot
3. SCAN button
4. DISP button
5. RPT/RDM button
6. TUNE/FOLDER knob / MENU button
7. AUX IN jack
8. AUX button
9. CD button
10. AM button
11. FM button
12. VOL (volume) control knob / ⏻ (power) button
13. Station select (1 - 6) buttons
14. TRACK ▼ button
15. ▲ SEEK button

## FM/AM RADIO WITH COMPACT DISC (CD) PLAYER (if so equipped)

For all operation precautions, see “Audio operation precautions” in this section.

### Audio main operation

**VOL (volume) knob / ⏻ (power) button:**

Place the ignition switch in the ACC or ON position and press the VOL (volume) knob / ⏻ (power) button while the system is off to call up the mode that was playing immediately before the system was turned off.

To turn the system off, press the VOL (volume) knob / ⏻ (power) button.

Turn the VOL (volume) knob / ⏻ (power) button to adjust the volume.

**MENU button**

| Audio | | |
|---|---|---|
| | Bass | Adjusts the bass to the desired level. |
| | Treble | Adjusts the treble to the desired level. |
| | Balance | Adjusts the balance to the desired level. Balance adjusts the sound level between the left and right speakers. |
| | Fade | Adjusts the fade to the desired level. Fade adjusts the sound level between the front and rear speakers. |
| | Speed Sensitive Vol. | Adjusts the speed sensitive volume function, which increases the volume of the audio system as the speed of the vehicle increases. Set to "OFF" to disable the feature. The higher the setting, the more the volume increases in relation to vehicle speed. |
| | AUX IN Vol. | Choose a setting from 0 to +3 to control the boost of incoming auxilary device volume. A setting of 0 provides no additional boost in volume. A setting of +3 provides the greatest boost in volume. |

Bass, treble, balance and fade can also be adjusted by pressing the MENU button until the desired mode appears in the display. Press the ▲ SEEK or TRACK ▼ button to adjust the setting to the desired level (-5 to +5). Once you have adjusted the sound quality to the desired level, press the MENU button repeatedly until the radio or CD display reappears. Otherwise, the radio or CD display will automatically reappear after about 10 seconds.

**DISP (display) button:**

Press the DISP (display) button while a CD is playing to change the text shown in the audio display as follows:

For CDs:

Running Time → Album Title: → Artist Name: → Song Title

For MP3 CDs:

Running Time → Folder Title: → Album Title: → Artist Name: → Song Title:

If the text information is too long to fully be displayed on the screen; press and hold the DISP button for longer than 1.5 seconds to scroll through the rest of the text.

Press the DISP (display) button while the radio is playing to toggle the audio display between station number and RDS.

**Clock operation**

To turn the clock display on or off, press the MENU button repeatedly until "Clock" appears on the display. Turn the TUNE/FOLDER knob to toggle the setting (ON or OFF).

**Clock set**

1. Press the MENU button repeatedly until "Adjust Clock" appears on the display.
2. Press the ENTER button.
3. "Change Hour" will appear on the screen. Turn the TUNE/FOLDER knob to adjust the hours and then press ENTER.
4. "Change Minute" will appear on the screen. Turn the TUNE/FOLDER knob to adjust the minutes and then press ENTER.

The display will return to the regular clock display after 10 seconds if no further adjustment is performed.

## FM/AM radio operation

**AM and FM buttons:**

Press the AM button to change the band to AM.

If another audio source is playing when the AM button is pressed, the audio source playing will automatically be turned off and the last radio station played will begin playing.

Press the FM button to change the band as follows:

FM1 → FM2 → FM1

If another audio source is playing when the FM button is pressed, the audio source playing will automatically be turned off and the last radio station played will begin playing.

The FM stereo indicator (ST) illuminates during FM stereo reception. When the stereo broadcast signal is weak, the radio automatically changes from stereo to monaural reception.

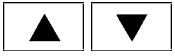

**SEEK and TRACK (tuning) buttons:**

Press the SEEK button ▲ to tune from low to high frequencies and stop at the next broadcasting station.

Press the TRACK button ▼ to tune from high to low frequencies and stop at the next broadcasting station.

Press and hold either button to seek at a faster speed.

**SCAN (tuning) button:**

Press the SCAN button. SCAN illuminates in the display window. Scan tuning begins from low to high frequencies. Scan tuning stops for 5 seconds at each broadcasting station that has sufficient signal strength. When scanning, SCAN blinks in the display. Pressing the SCAN button again during this 5 second period stops scan tuning and the radio remains tuned to that station.

**1 to 6 Station memory operations:**

Twelve stations can be set for the FM band (6 for FM1, 6 for FM2) and six stations can be set for the AM band.

1. Choose the radio band AM, FM1 or FM2 using the AM or FM button.
2. Tune to the desired station using manual, SEEK or SCAN tuning. Press and hold any of the desired station memory buttons (1 – 6) until a beep sound is heard.
3. The channel indicator will then come on and the sound will resume. Programming is now complete.
4. Other buttons can be set in the same manner.

If the battery cable is disconnected or if the fuse opens, the radio memory will be canceled. In that case, reset the desired stations.

## Compact disc (CD) player operation

Place the ignition switch in the ACC or ON position, and carefully insert the compact disc into the slot with the label side up. The compact disc is automatically pulled into the slot and starts to play.

If the radio is already operating, it automatically turns off and the compact disc begins to play.

**CD button:**

When the CD button is pressed with a compact disc loaded and the radio playing, the radio turns off and the last used compact disc starts to play.

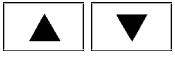

**SEEK and TRACK (Fast Forward, Rewind) buttons:**

When the SEEK button ▲ or TRACK ▼ button is pressed while the compact disc is playing, the compact disc plays at an increased speed while fast forwarding or rewinding. When the button is released, the compact disc returns to normal play speed.

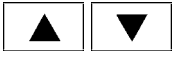

**SEEK and TRACK buttons:**

When the SEEK ▲ button is pressed while the compact disc is playing, the next track following the present one starts to play from the beginning. Press the SEEK ▲ button several times to skip several tracks. Each time the button is pressed, the CD advances one additional track. The track number appears in the display window. (When the last track on the compact disc is skipped, the first track is played.)

When the TRACK ▼ button is pressed, the track being played returns to the beginning. Press the TRACK ▼ button several times to skip back several tracks. Each time the button is pressed the CD moves back one track.

**RPT/RDM button:**

Press the RPT/RDM button while a compact disc is playing to change the play pattern as follows:

CD:

TRACK REPEAT → DISC RANDOM → DISC REPEAT

MP3/WMA CD:

FOLDER REPEAT → TRACK REPEAT → DISC RANDOM → FOLDER RANDOM → DISC REPEAT

TRACK REPEAT: The track that is currently playing will be repeated.

DISC RANDOM: The order of the tracks on the disc will be mixed during play.

DISC REPEAT: The disc currently playing will be repeated.

FOLDER REPEAT: The tracks in the current folder will be repeated.

FOLDER RANDOM: The order of the tracks in the folder will be mixed during play.

**SCAN (CDs) button:**

Press the SCAN button for less than 1.5 seconds to scan all tracks of the current disc for 10 seconds per track. The SCAN icon is flashed during scan mode.

The scan mode is canceled once it scans through all tracks on the disc, or if the SCAN button is pressed during scan mode.

**CD EJECT:**

When the ⏏ button is pressed with a compact disc loaded, the compact disc will be ejected.

When the ⏏ button is pressed while the compact disc is playing, the compact disc will eject and the system will turn off.

**AUX (Auxiliary) button:**

The AUX IN jack is located on the CD player. The AUX IN audio input jack accepts any standard analog audio input such as from a portable cassette tape/CD player, MP3 player or laptop computers.

Press the AUX button to play a compatible device when it is plugged into the AUX IN jack.

Press the MENU button repeatedly until “AUX IN Volume” appears on the screen to control the incoming volume level of the auxiliary input device. Turn the TUNE/FOLDER knob to adjust the level between 0 and +3.

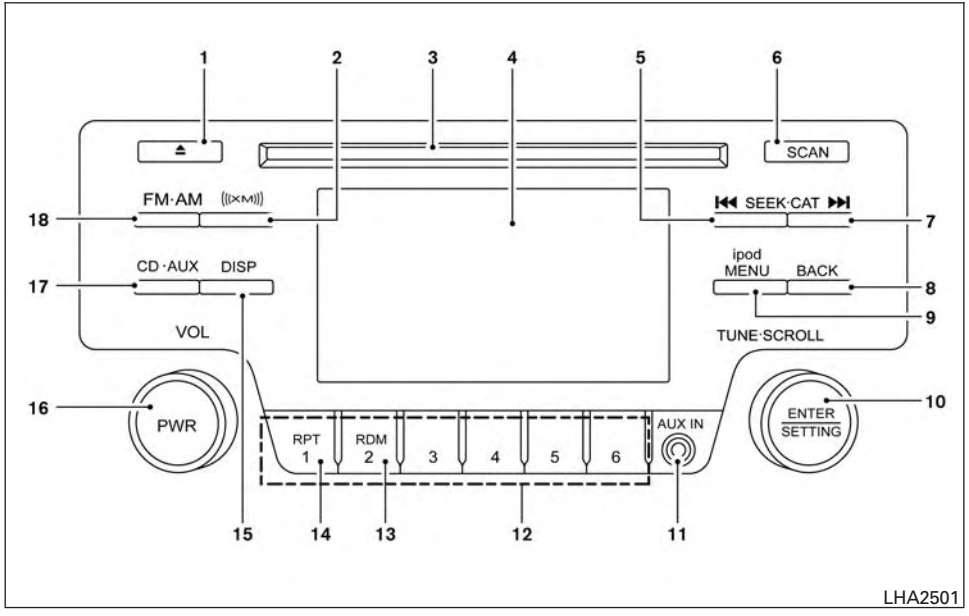


1. ⏏ CD eject button
2. XM button*
3. CD insert slot
4. Display screen
5. ⏮ SEEK button
6. SCAN button
7. ⏭ CAT button
8. BACK button
9. iPod MENU button
10. TUNE/SCROLL knob, ENTER/SETTING button
11. AUX IN jack
12. Station select (1 - 6) buttons
13. RDM button
14. RPT button
15. DISP button
16. VOL (volume) knob / PWR (power) button
17. CD▪AUX button
18. FM▪AM button

*No satellite radio reception is available when the XM button is pressed to access satellite radio stations unless optional satellite receiver and antenna are installed and an SiriusXM® Satellite Radio service subscription is active. Satellite radio is not available in Alaska, Hawaii and Guam.

## FM/AM/SAT RADIO WITH COMPACT DISC (CD) PLAYER (Type A) (if so equipped)

For all operation precautions, see “Audio operation precautions” in this section.

### Audio main operation

**VOL (volume) knob / PWR (power) button:**

Place the ignition switch in the ACC or ON position and press the VOL (volume) knob / PWR (power) button while the system is off to call up the mode that was playing immediately before the system was turned off.

To turn the system off, press the VOL (volume) knob / PWR (power) button.

Turn the VOL (volume) knob / PWR (power) button to adjust the volume.

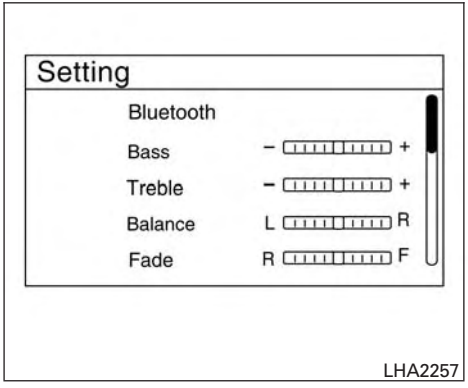

LHA2257

**ENTER/SETTING button:**

Press the ENTER/SETTING button to show the Settings screen on the display. Turn the TUNE/SCROLL knob to navigate the options and then press the ENTER/SETTING button to make a selection.

**Bass, Treble, Balance and Fade**

Increase or decrease the level of bass, treble, balance or fade. Balance controls the level of sound between the left and right speakers. Fade controls the level of sound between the front and rear speakers.

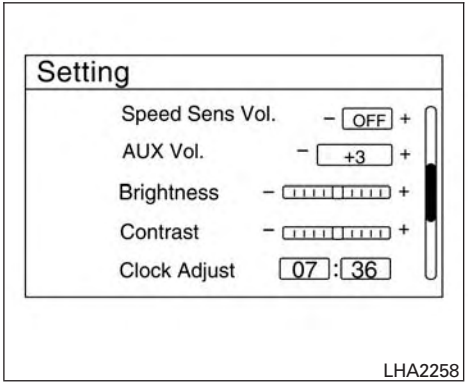

LHA2258

**Speed Sens Vol. (Speed Sensitive Volume)**

Speed Sensitive Volume adjusts the volume of the audio system as the vehicle’s driving speed changes. The feature can be turned off or set to a level of 1 to 5. Level 5 represents the highest degree of volume adjustment.

**AUX Vol.**

Choose a setting from 0 to +3 to control the boost of the incoming auxiliary device volume. A setting of 0 provides no additional boost in volume. A setting of +3 provides the greatest boost in volume.

**Brightness and Contrast**

Adjust the brightness or contrast to adjust the appearance of the display screen.

**Clock Adjust**

Press the ENTER/SETTING button to highlight the hours or minutes and then use the TUNE/SCROLL knob to adjust the value. Press the ENTER/SETTING button again to set the value.

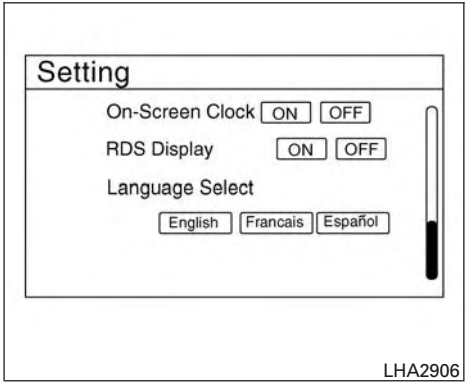


**On-Screen Clock**

Select “ON” or “OFF” to control whether or not the clock is shown in the upper right corner of the display screen.

**RDS Display**

Select “ON” or “OFF” to control whether or not RDS information is displayed on the screen while the radio is playing.

**Language Select**

Select the desired language for the system. English, Spanish and French are the available languages.

**iPod® MENU button**

This button can only be used for iPod® operations. See “iPod® player operation without Navigation System” later in this section for details about the function of this button.

## FM/AM/SAT radio operation

**FM·AM button:**

Press the FM·AM button to change the band as follows:

AM → FM1 → FM2 → AM

If another audio source is playing when the FM·AM button is pressed, the audio source playing will automatically be turned off and the last radio station played will begin playing.

The FM stereo indicator (STEREO) is shown on the screen during FM stereo reception. When the stereo broadcast signal is weak, the radio automatically changes from stereo to monaural reception.

**XM band select:**

Pressing the XM button will change the band as follows:

XM1* → XM2* → XM3*→ XM1* (satellite, if so equipped)

When the XM button is pressed while the ignition switch is in the ACC or ON position, the radio will come on at the last station played.

The last station played will also come on when the ON-OFF/VOL control knob is pressed.

*When the XM button is pressed, the satellite radio mode will be skipped unless an optional satellite receiver and antenna are installed and a SiriusXM® Satellite Radio service subscription is active. Satellite radio is not available in Alaska, Hawaii and Guam.

If a compact disc is playing when the XM button is pressed, the compact disc will automatically be turned off and the last radio station played will come on.

While the radio is in XM mode, the operation can be controlled through the touch-screen. Touch the "Channels" key to display a list of channels. Touch a channel displayed on the list to change to that channel. Touch the "Categories" key to display a list of categories. Touch a category displayed on the list to display options within that category.

**TUNE/SCROLL knob (Tuning):**

Turn the TUNE/SCROLL knob to the left or right for manual tuning.

**⏮ ⏭ SEEK tuning:**

Press the SEEK button ⏮ or ⏭ to tune from low to high or high to low frequencies and to stop at the next broadcasting station.

**SCAN tuning:**

Press the SCAN button to stop at each broadcasting station for 5 seconds. SCAN will appear on the screen while the radio is scan tuning.

Pressing the button again during this 5 second period will stop SCAN tuning and the radio will remain tuned to that station. If the SCAN button is not pressed within 5 seconds, SCAN tuning moves to the next station.

**1 to 6 Station memory operations:**

Six stations can be set for the AM band. Twelve stations can be set for the FM band (6 for FM1, 6 for FM2). Eighteen channels can be set for the satellite radio (6 for XM1, 6 for XM2, 6 for XM3).

1. Choose the radio band AM, FM1 or FM2 using the FM·AM select button, or choose the satellite band XM1, XM2 or XM3 using the XM button.
2. Tune to the desired station using manual, SEEK or SCAN tuning. Press and hold any of the desired station memory buttons (1 – 6) until the preset number is updated on the display and the sound is briefly muted.
3. The channel indicator will then come on and the sound will resume. Programming is now complete.
4. Other buttons can be set in the same manner.

If the battery cable is disconnected, or if the fuse opens, the radio memory will be canceled. In that case, reset the desired stations.

## Compact disc (CD) player operation

If the radio is already operating, it automatically turns off and the compact disc begins to play.

**CD·AUX button:**

With a CD loaded, press the CD·AUX button until the CD mode is displayed on the screen.

**CD/MP3 display mode:**

While listening to an MP3/WMA CD, certain text may be displayed on the screen if the CD has been encoded with text information. Depending on how the MP3/WMA CD is encoded, information such as Artist, Song and Folder will be displayed.

The track number and the total number of tracks in the current folder or on the current disc are displayed on the screen as well.

**SEEK/CAT (Reverse or Fast Forward) button:**

Press and hold the SEEK/CAT button ⏮ or ⏭ for 1.5 seconds while the compact disc is playing to reverse or fast forward the track being played. The compact disc plays at an increased speed while reversing or fast forwarding. When the button is released, the compact disc returns to normal play speed.

**SEEK/CAT button:**

Press the SEEK/CAT button ⏮ while a CD or MP3/WMA CD is playing to return to the beginning of the current track. Press the SEEK/CAT button ⏮ several times to skip backward several tracks.

Press the SEEK/CAT button ⏭ while a CD or MP3/WMA CD is playing to advance one track. Press the SEEK/CAT button ⏭ several times to skip forward several tracks. If the last track on a CD is skipped, the first track on the disc is played. If the last track in a folder of an MP3/WMA CD is skipped, the first track of the next folder is played.

**TUNE/SCROLL knob (MP3/WMA CD only):**

If a MP3/WMA CD with multiple folders is playing, turn the TUNE/SCROLL knob to change folders. Turn the knob to the left to skip back a folder. Turn the knob to the right to skip ahead a folder.

**RPT button:**

When the RPT button is pressed while a compact disc is playing, the play pattern can be changed as follows:

CD:

1 Track Repeat ⟷ OFF

CD with MP3 or WMA:

1 Folder Repeat → 1 Track Repeat → OFF

1 Track Repeat: the current track will be repeated.

1 Folder Repeat: the current folder will be repeated.

OFF: No repeat play pattern is applied. The indicator on the display will turn off.

The current play pattern of the CD is displayed on the screen unless no pattern is applied.

**RDM button:**

When the RDM button is pressed while a compact disc is playing, the play pattern can be changed as follows:

CD:

1 Disc Random ⟷ OFF

CD with MP3 or WMA:

1 Disc Random → 1 Folder Random → OFF

1 Disc Random: all tracks on the disc will be played randomly.

1 Folder Random: all tracks in the current folder will be played randomly.

OFF: No random play pattern is applied. The indicator on the display will turn off.

The current play pattern of the CD is displayed on the screen unless no pattern is applied.

**CD•AUX button:**

The AUX IN jack is located on the CD player. The AUX IN audio input jack accepts any standard analog audio input such as from a portable cassette tape/CD player, MP3 player or a laptop computer.

Press the CD▪AUX button to play a compatible device plugged into the AUX IN jack. The CD▪AUX button is also used to switch the audio system to a source plugged into the USB input jack in the center console. When a device is plugged into the AUX IN jack while another device is plugged into the USB input jack, the CD▪AUX button is used to toggle between the two functions.

For more information about the USB input jack, see “USB interface (models without Navigation System)” in this section.

**EJECT button:**

When the ⏏ button is pressed with a compact disc loaded, the compact disc will eject and the last source will be played.

When the ⏏ button is pressed twice with a compact disc loaded, the compact disc will be ejected further for easier CD removal. If the disc is not removed within 20 seconds, the disc will reload.

## Additional features

For more information about the iPod® player available with this system, see “iPod® player operation without Navigation System” in this section.

For more information about the USB interface available with this system, see “USB interface (models without Navigation System)” in this section.

For more information about the Pandora® audio feature available with this system, see “Pandora® audio” in this section.

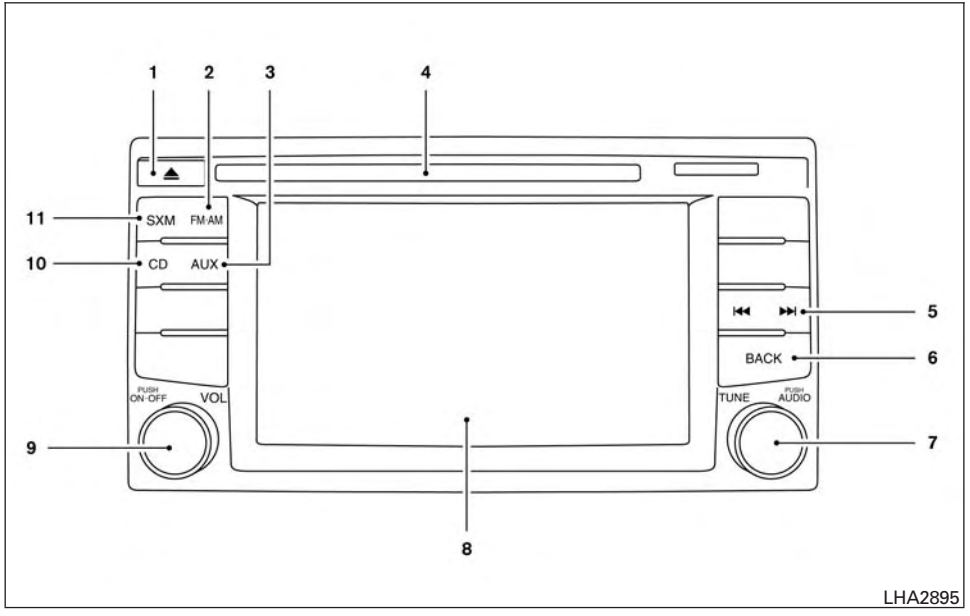


1. ⏏ CD eject button
2. FM-AM button
3. AUX button
4. CD insert slot
5. ⏮ Backward seek button and ⏭ Forward seek button
6. BACK button
7. TUNE knob / AUDIO button
8. Display screen
9. ON-OFF button / VOL (volume) control knob
10. CD button
11. SXM button*

*No satellite radio reception is available when the SXM button is pressed to access satellite radio stations unless optional satellite receiver and antenna are installed and a SiriusXM® Satellite Radio service subscription is active. Satellite radio is not available in Alaska, Hawaii and Guam.

## FM/AM/SAT RADIO WITH COMPACT DISC (CD) PLAYER (Type B) (if so equipped)

For all operation precautions, see “Audio operation precautions” in this section.

### Audio main operation

**ON-OFF button / VOL (volume) control knob:**

Place the ignition switch in the ACC or ON position and press the ON-OFF button while the system is off to call up the mode (radio, CD, AUX, Bluetooth® audio USB or iPod®) that was playing immediately before the system was turned off.

To turn the system off, press the ON-OFF button.

Turn the VOL (volume) control knob to adjust the volume.

This vehicle may be equipped with Speed Sensitive Volume. When this feature is active, the audio volume changes as the driving speed changes.

**Audio settings:**

1. Press the [ APPS ] button.
2. Touch the “Settings” key.
3. Touch the “Audio” key.

Use the touch-screen to adjust the following items to the desired setting:

| Audio | | |
|---|---|---|
| | Bass | Adjusts the bass to the desired level. |
| | Treble | Adjusts the treble to the desired level. |
| | Balance | Adjusts the balance to the desired level. Balance adjusts the sound level between the left and right speakers. |
| | Fade | Adjusts the fade to the desired level. Fade adjusts the sound level between the front and rear speakers. |
| | Speed Sensitive Vol. | Adjusts the speed sensitive volume function, which increases the volume of the audio system as the speed of the vehicle increases. Set to “OFF” to disable the feature. The higher the setting, the more the volume increases in relation to vehicle speed. |
| | AUX Volume Level | Controls the volume level of incoming sound when an auxiliary device is connected to the system. Available options are Low (Quiet), Medium, and High (Loud). |

Bass, treble, balance and fade can also be adjusted by pressing the AUDIO control knob and turning it to select the item to adjust. When the desired item is shown on the display, turn the tuning to adjust and then press the AUDIO button until the display returns to the main audio screen. If the button is not pressed for approximately 10 seconds, the radio or CD display will automatically reappear.

**SXM settings:**

To view the SXM settings:

1. Press the [ APPS ] button.
2. Touch the “Settings” key.
3. Touch the “SXM” key.

The signal strength, activation status and other information are displayed on the screen.

## FM/AM/SAT radio operation

**FM·AM button:**

Press the FM·AM button to change the band as follows:

AM → FM1 → FM2 → AM

If another audio source is playing when the FM·AM button is pressed, the audio source playing will automatically be turned off and the last radio station played will begin playing.

The FM stereo indicator (ST) is shown on the screen during FM stereo reception. When the stereo broadcast signal is weak, the radio automatically changes from stereo to monaural reception.

**SXM band select:**

Pressing the SXM button will change the band as follows:

SXM1* → SXM2* → SXM3*→ SXM1* (satellite, if so equipped)

When the SXM button is pressed while the ignition switch is in the ACC or ON position, the radio will come on at the last station played.

The last station played will also come on when the ON-OFF/VOL control knob is pressed.

*When the SXM button is pressed, the satellite radio mode will be skipped unless an optional satellite receiver and antenna are installed and a SiriusXM® Satellite Radio service subscription is active. Satellite radio is not available in Alaska, Hawaii and Guam.

If a compact disc is playing when the SXM button is pressed, the compact disc will automatically be turned off and the last radio station played will come on.

While the radio is in SXM mode, the operation can be controlled through the touch-screen. Touch the “Channels” key to display a list of channels. Touch a channel displayed on the list to change to that channel. Touch the “Categories” key to display a list of categories. Touch a category displayed on the list to display options within that category.

**Tuning with the touch-screen:**

When in AM or FM mode, the radio can be tuned using the touch-screen. To bring up the visual tuner, touch the “Tune” key on the lower right corner of the screen. A screen appears with a bar running from low frequencies on the left to high frequencies on the right. Touch the screen at the location of the frequency you wish to tune and the station will change to that frequency. To return to the regular radio display screen, touch the “OK” key.

**Tuning with the TUNE/SCROLL knob:**

The radio can also be manually tuned using the TUNE/SCROLL knob. When in FM or AM mode, turn the TUNE/SCROLL knob to the left for lower frequencies or to the right for higher frequencies. When in SXM mode, turn the TUNE/SCROLL knob to change the channel.

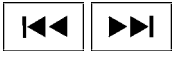

**SEEK tuning:**

When in FM or AM mode, press the seek buttons ⏮ or ⏭ to tune from low to high or high to low frequencies and to stop at the next broadcasting station.

When in SXM mode, press the seek buttons ⏮ or ⏭ to change the category.

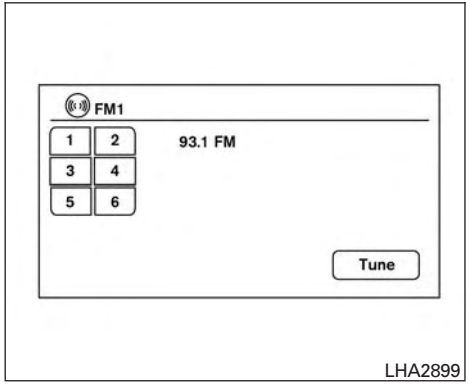


**1 to 6 Station memory operations:**

Twelve stations can be set for the FM band (6 for FM1, 6 for FM2) and six stations can be set for the AM band. Twelve stations can be set for the SXM band (6 for SXM1, 6 for SXM2).

1. Choose the radio band AM, FM1 or FM2 using the FM·AM select button or choose the radio band SXM1, SXM2 using the SXM button.
2. Tune to the desired station using manual or seek tuning. Touch and hold any of the desired station memory keys (1 – 6) until a beep sound is heard.
3. The channel indicator will then come on and the sound will resume. Programming is now complete.
4. Other keys can be set in the same manner.

If the battery cable is disconnected or if the fuse opens, the radio memory will be canceled. In that case, reset the desired stations.

Presets can also be selected by touching the desired preset number on the screen.

## Compact disc (CD) player operation

If the radio is already operating, it automatically turns off and the compact disc begins to play.

**CD button:**

When the CD button is pressed with the system off and the compact disc loaded, the system will turn on and the compact disc will start to play.

When the CD button is pressed with a compact disc loaded and the radio playing, the radio will automatically be turned off and the compact disc will start to play.

## CD/MP3 display mode

| Menu item | | |
|---|---|---|
| CD/MP3 display mode | | While listening to a CD or an MP3/WMA CD, certain text may be displayed (when a CD encoded with text is being used). Depending on how the CD or MP3/WMA CD is encoded, the text is displayed listing the artist, album and song title. There are other keys displayed on the screen when a CD is playing: |
| | Random | Touch the “Random” key to apply a random play pattern to the CD. If an MP3 CD is playing, touching “Random” or alternates between Random Folder, and Random All. This text will appear on the display. To cancel Random mode, touch the “Random” key until the key is no longer highlighted. |
| | Repeat | Touch the “Repeat” key to apply a repeat play pattern to the CD. If an MP3 CD is playing, touching “Repeat” alternates between repeating the current song and repeating the current folder. This text will appear on the display. To cancel Repeat mode, touch the “Repeat” key until the key is no longer highlighted |
| | Browse | Touch the “Browse” key to display the titles on the CD in list format. Touch the title of a song in the list to begin playing that song. If an MP3 CD is playing, touching the “Browse” key will also list the folders on the disc. Follow the procedure for selecting a song with the touch-screen to choose a folder. |

**SEEK (Reverse or Fast Forward) buttons:**

Press and hold the seek buttons ⏮ or ⏭ for 1.5 seconds while the compact disc is playing to reverse or fast forward the track being played. The compact disc plays at an increased speed while reversing or fast forwarding. When the button is released, the compact disc returns to normal play speed.

**SEEK buttons:**

Press the seek button ⏮ while a CD or MP3/WMA CD is playing to return to the beginning of the current track. Press the seek button ⏮ several times to skip backward several tracks.

Press the seek button ⏭ while a CD or MP3/WMA CD is playing to advance one track. Press the seek button ⏭ several times to skip forward several tracks. If the last track on a CD is skipped, the first track on the disc is played. If the last track in a folder of an MP3/WMA CD is skipped, the first track of the next folder is played.

**AUX button:**

The AUX IN audio input jack accepts any standard analog audio input such as from a portable cassette tape/CD player, MP3 player or a laptop computer. Press the AUX button to play a compatible device plugged into the AUX IN jack.

**EJECT button:**

When the ⏏ button is pressed with a compact disc loaded, the compact disc will eject and the last source will be played.

If the disc is not removed within 10 seconds, the disc will reload.

## Additional features

For more information about the iPod® player available with this system, see “iPod® player operation with Navigation System” in this section.

For more information about the USB interface available with this system, see “USB interface (models with Navigation System)” in this section.

For more information about the Bluetooth® audio interface available with this system, see “Bluetooth® streaming audio with Navigation System” in this section.

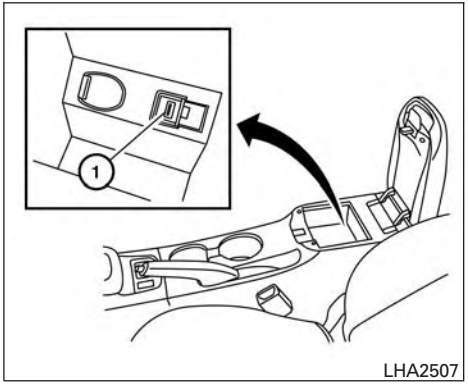


## USB INTERFACE (models without Navigation System) (if so equipped)

### Connecting a device to the USB input jack

**⚠ WARNING**

**Do not connect, disconnect, or operate the USB device while driving. Doing so can be a distraction. If distracted you could lose control of your vehicle and cause an accident or serious injury.**

**⚠ CAUTION**

- **Do not force the USB device into the USB port. Inserting the USB device tilted or up-side-down into the port may damage the port. Make sure that the USB device is connected correctly into the USB port.**
- **Do not grab the USB port cover (if so equipped) when pulling the USB device out of the port. This could damage the port and the cover.**
- **Do not leave the USB cable in a place where it can be pulled unintentionally. Pulling the cable may damage the port.**

Refer to your device manufacturer's owner information regarding the proper use and care of the device.

The USB input jack is located in the center console. Insert the USB device into the jack ①.

When a compatible storage device is plugged into the jack, compatible audio files on the storage device can be played through the vehicle's audio system.

## Audio file operation

**AUX button:**

Place the ignition switch in the ON or ACC position and press the AUX button to switch to the USB input mode. If a CD is playing or another audio source is plugged in through the AUX IN jack, the AUX button toggles between the three sources.

**Play information:**

Information about the audio files being played can be displayed on the display screen of the vehicle's audio system. Depending on how the audio files are encoded, information such as Folder, Song and Artist will be displayed.

The track number and number of total tracks in the folder are displayed on the screen as well.

**⏮ ⏭ SEEK/CAT (Reverse or Fast Forward) buttons:**

Press and hold the SEEK/CAT buttons ⏮ or ⏭ for 1.5 seconds while an audio file on the USB device is playing to reverse or fast forward the track being played. The track plays at an increased speed while reversing or fast forwarding. When the button is released, the audio file returns to normal play speed.

**⏮ ⏭ SEEK/CAT buttons:**

Press the SEEK/CAT button ⏮ while an audio file on the USB device is playing to return to the beginning of the current track. Press the SEEK/CAT button ⏮ several times to skip backward several tracks.

Press the SEEK/CAT button ⏭ while an audio file on the USB device is playing to advance one track. Press the SEEK/CAT button ⏭ several times to skip forward several tracks. If the last track in a folder on the USB device is skipped, the first track of the next folder is played.

**RDM button:**

When the RDM button is pressed while an audio file on the USB device is playing, the play pattern can be changed as follows:

All Random → 1 Folder Random → OFF

All Random: all tracks on the USB device will be played randomly.

1 Folder Random: all tracks in the current folder will be played randomly.

OFF: No random play pattern is applied. The indicator on the display will turn off.

The current play pattern of the USB device is displayed on the screen unless no pattern is applied.

**RPT button:**

When the RPT button is pressed while an audio file on the USB device is playing, the play pattern can be changed as follows:

1 Folder Repeat → 1 Track Repeat → OFF

1 Track Repeat: the current track will be repeated.

1 Folder Repeat: the current folder will be repeated.

OFF: No repeat play pattern is applied. The indicator on the display will turn off.

The current play pattern of the USB device is displayed on the screen unless no pattern is applied.

**TUNE/SCROLL knob:**

If there are multiple folders with audio files on the USB device, turn the TUNE/SCROLL knob to change folders. Turn the knob to the left to skip back a folder. Turn the knob to the right to skip ahead a folder. If there is only one folder of audio files on the USB device, turning the TUNE/SCROLL knob in either direction will return to the first track on the USB device.

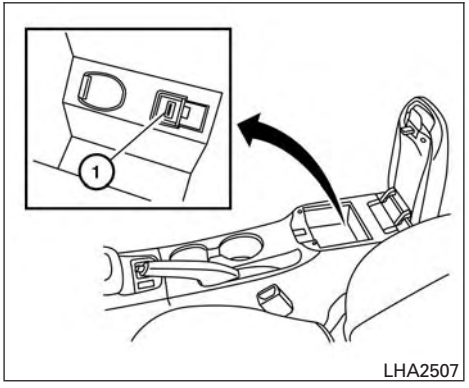

LHA2507

LHA1378

## USB INTERFACE (models with Navigation System)

### Connecting a device to the USB input jack

**⚠ WARNING**

**Do not connect, disconnect, or operate the USB device while driving. Doing so can be a distraction. If distracted you could lose control of your vehicle and cause an accident or serious injury.**

**⚠ CAUTION**

- **Do not force the USB device into the USB port. Inserting the USB device tilted or up-side-down into the port may damage the port. Make sure that the USB device is connected correctly into the USB port.**
- **Do not grab the USB port cover (if so equipped) when pulling the USB device out of the port. This could damage the port and the cover.**
- **Do not leave the USB cable in a place where it can be pulled unintentionally. Pulling the cable may damage the port.**

Refer to your device manufacturer's owner information regarding the proper use and care of the device.

The USB input jack is located in the center console. Insert the USB device into the jack ①.

When a compatible storage device is plugged into the jack, compatible audio files on the storage device can be played through the vehicle's audio system.

## Audio file operation

**AUX button:**

Place the ignition switch in the ON or ACC position and press the AUX button to switch to the USB input mode. If another audio source is playing and a USB memory device is inserted, press the AUX button until the center display changes to the USB memory mode.

If the system has been turned off while the USB memory was playing, push the ON-OFF/VOL control knob to restart the USB memory.

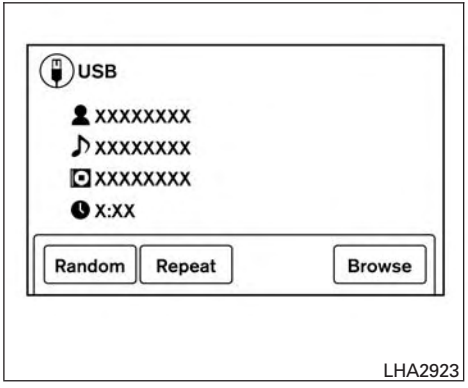


**Play information:**

Information about the audio files being played is shown on the display screen of the vehicle's audio system. Touch "Browse" to display the list of categories that can be used to narrow the search. Touch the name of a song on the screen to begin playing that song.

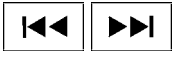

**Seeking buttons:**

Press the ⏮ button while an audio file on the USB device is playing to return to the beginning of the current track. Press the ⏮ button several times to skip backward several tracks.

Press the ▶▶| button while an audio file on the USB device is playing to advance one track. Press the ▶▶| button several times to skip forward several tracks. If the last track in a folder on the USB device is skipped, the first track of the next folder is played.

**Random and repeat play mode:**

While files on a USB device are playing, the play pattern can be altered so that songs are repeated or played randomly.

**Random:**
Touch the "Random" key to apply a random play pattern to the USB device. To cancel Random mode, touch the "Random" key again.

**Repeat:**
Touch the "Repeat" key to apply a repeat play pattern to the USB device. To cancel Repeat mode, touch the "Repeat" key again.

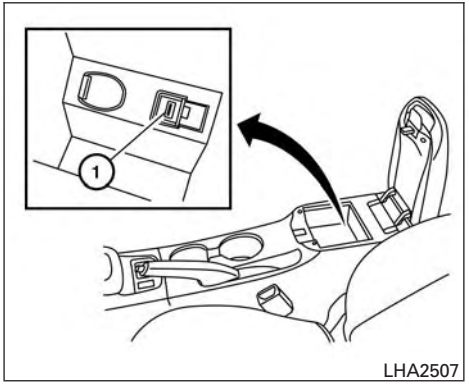


## iPod®* PLAYER OPERATION WITHOUT NAVIGATION SYSTEM (if so equipped)

### Connecting iPod®

**⚠ WARNING**

**Do not connect, disconnect or operate the USB device while driving. Doing so can be a distraction. If distracted you could lose control of your vehicle and cause an accident or serious injury.**

**⚠ CAUTION**

- **Do not force the USB device into the USB port. Inserting the USB device tilted or up-side-down into the port may damage the port. Make sure that the USB device is connected correctly into the USB port.**
- **Do not grab the USB port cover (if so equipped) when pulling the USB device out of the port. This could damage the port and the cover.**
- **Do not leave the USB cable in a place where it can be pulled unintentionally. Pulling the cable may damage the port.**

Refer to your device manufacturer's owner information regarding the proper use and care of the device.

To connect an iPod® to the vehicle so that the iPod® can be controlled with the audio system controls and display screen, use the USB jack located in the center console ①. Connect the iPod®-specific end of the cable to the iPod® and the USB end of the cable to the USB jack on the vehicle. If your iPod® supports charging via a USB connection, its battery will be charged while connected to the vehicle with the ignition switch in the ACC or ON position.

While connected to the vehicle, the iPod® may only be able to be operated by the vehicle audio controls.

To disconnect the iPod® from the vehicle, remove the USB end of the cable from the USB jack on the vehicle, then remove the cable from the iPod®.

* iPod® is a trademark of Apple Inc., registered in the U.S. and other countries.

## Compatibility

The following models are compatible:

- iPod® 5th Generation (firmware version 1.3 or later)
- iPod® Classic (80GB) (firmware version 1.1.2PC or later)
- iPod® Classic (120GB) (firmware version 2.0.1PC or later)
- iPod® nano - 1st generation (firmware version 1.3.1 or later)
- iPod® nano - 2nd generation (firmware version 1.1.3 or later)
- iPod® nano - 3rd generation (firmware version 1.1.3PC or later)
- iPod® nano - 4th generation (firmware version 1.0PC or later)
- iPod® nano - 5th generation (8GB) (firmware version 1.0.2PC or later)
- iPod® nano - 5th generation (16GB) (firmware version 1.0.1PC or later)
- iPod® nano - 6th generation (8GB) (firmware version 1.2PC or later)
- iPod® nano - 6th generation (8GB) (firmware version 1.1PC or later)
- iPod® Touch - 1st generation (firmware version 2.2.1 or later)
- iPod® Touch - 2nd generation (firmware version 2.2.1 or later)
- iPod® Touch - 3rd generation (firmware version 3.1.3 or later)
- iPod® Touch - 4th generation (firmware version 4.3.5 or later)
- iPhone® 3G (firmware version 4.1 or later)
- iPhone® 3GS (firmware version 4.3 or later)
- iPhone® 4 (firmware version 5.0 or later)
- iPhone® 4S (firmware version 5.1 or later)
- iPad® (firmware version 4.3.2 or later)
- iPad® 2 (firmware version 4.3.3 or later)

Make sure that your iPod® firmware is updated to the version indicated above.

## Audio main operation

Place the ignition switch to the ACC or ON position. Then, press the CD·AUX or iPod® MENU button repeatedly to switch to the iPod® mode.

If the audio system is turned off while the iPod® is playing, the iPod® plays when the audio system is turned back on.

If the audio system is off, pressing the CD·AUX or iPod® MENU button turns the audio system on and plays the iPod®.

If the audio system is on, the audio system automatically begins playing tracks from the iPod® when it is plugged into the jack.

**iPod® MENU button:**

Press the iPod® MENU button while the iPod® is connected to show the iPod® operation menu on the audio display. Scroll through the menu list using the TUNE·SCROLL control dial. Press ENTER to select a menu item. Items in the iPod® menu appear on the display in the following order:

- Now playing
- Playlists
- Artists
- Albums

- Songs
- Podcasts
- Genres
- Composers
- Audiobooks
- Shuffle songs

For more information about each item, see the iPod® Owner's Manual.

**SEEK/CAT buttons:**

Press the SEEK/CAT buttons ⏮ or ⏭ to skip backward or forward one track.

Press and hold the SEEK/CAT buttons ⏮ or ⏭ for 1.5 seconds while a track is playing to reverse or fast forward the track being played. The track plays at an increased speed while reversing or fast forwarding. When the button is released, the track returns to normal play speed.

**REPEAT (RPT):**

When the RPT button is pressed while a track is being played, the play pattern can be changed as follows:

Repeat Off → 1 Track Repeat → All Repeat → Repeat Off

1 Track Repeat: the current track will be repeated.

All Repeat: all songs in the current list are repeated.

Repeat Off: no repeat play pattern is applied.

**RANDOM (RDM):**

When the RDM button is pressed while a track is being played, the play pattern can be changed as follows:

Shuffle Off → Track Shuffle → Album Shuffle → Shuffle Off

Track Shuffle: the tracks in the current list will be played randomly.

Album Shuffle: the albums in the current list will be played randomly.

Shuffle Off: no random play pattern is applied.

**BACK button:**

When the BACK button is pressed, it returns to the previous menu.

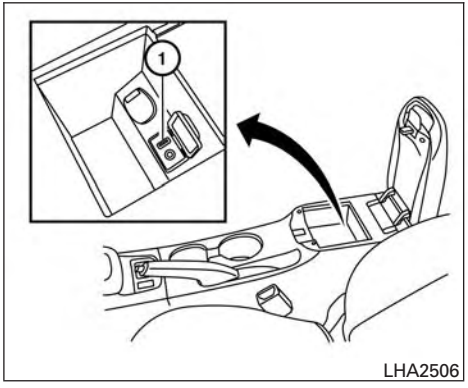

LHA2506

## iPod®* PLAYER OPERATION WITH NAVIGATION SYSTEM (if so equipped)

### Connecting iPod®

**⚠ WARNING**

**Do not connect, disconnect or operate the USB device while driving. Doing so can be a distraction. If distracted you could lose control of your vehicle and cause an accident or serious injury.**

**⚠ CAUTION**

- **Do not force the USB device into the USB port. Inserting the USB device tilted or up-side-down into the port may damage the port. Make sure that the USB device is connected correctly into the USB port.**
- **Do not grab the USB port cover (if so equipped) when pulling the USB device out of the port. This could damage the port and the cover.**
- **Do not leave the USB cable in a place where it can be pulled unintentionally. Pulling the cable may damage the port.**

Refer to your device manufacturer's owner information regarding the proper use and care of the device.

To connect an iPod® to the vehicle so that the iPod® can be controlled with the audio system controls and display screen, use the USB jack located in the center console ①. Connect the iPod®-specific end of the cable to the iPod® and the USB end of the cable to the USB jack on the vehicle. If your iPod® supports charging via a USB connection, its battery will be charged while connected to the vehicle with the ignition switch in the ACC or ON position.

While connected to the vehicle, the iPod® may only be able to be operated by the vehicle audio controls.

To disconnect the iPod® from the vehicle, remove the USB end of the cable from the USB jack on the vehicle, then remove the cable from the iPod®.

* iPod® is a trademark of Apple Inc., registered in the U.S. and other countries.

## Compatibility

The following models are compatible:

- iPod® Classic 5th generation (firmware version 1.3.0 or later)
- iPod® Classic 6th generation (firmware version 2.0.1 or later)
- iPod® Classic 7th generation (firmware version 2.0.4 or later)
- iPod® Touch 2nd generation (firmware version 4.2.1 or later)*
- iPod® Touch 3rd generation (firmware version 5.1 or later)
- iPod® Touch 4th generation (firmware version 5.1 or later)
- iPod® nano - 1st generation (firmware version 1.3.1 or later)
- iPod® nano - 2nd generation (firmware version 1.1.3 or later)
- iPod® nano - 3rd generation (firmware version 1.1.3 or later)
- iPod® nano - 4th generation (firmware version 1.0.4 or later)
- iPod® nano - 5th generation (firmware version 1.0.2 or later)
- iPod® nano - 6th generation (firmware version 1.1 or later)
- iPhone® 3G (firmware version 4.2.1 or later)
- iPhone® 3GS (firmware version 5.1 or later)
- iPhone® 4 (firmware version 5.1 or later)
- iPhone® 4S (firmware version 5.1 or later)

* Some features of this iPod® may not be fully functional.

Make sure that your iPod® firmware is updated to the version indicated above.

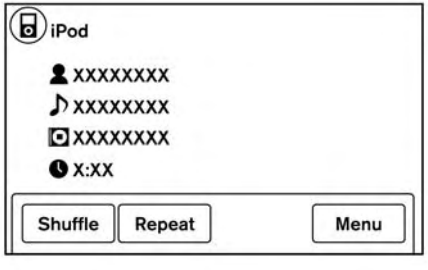

LHA2911

## Audio main operation

Place the ignition switch in the ACC or ON position. Press the AUX button repeatedly to switch to the iPod® mode.

If the system has been turned off while the iPod® was playing, pressing the VOL/ON·OFF control knob will start the iPod®.

**AUX button:**

When the AUX button is pressed with the system off and the iPod® connected, the system will turn on. If another audio source is playing and the iPod® is connected, press the AUX button repeatedly until the center display changes to the iPod® mode.

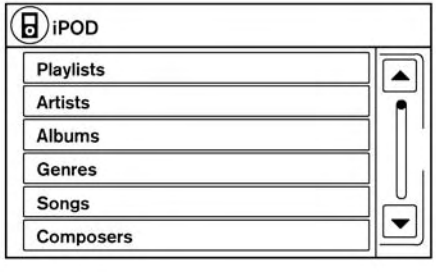

LHA2907

**Interface:**

The interface for iPod® operation shown on the vehicle's audio system display screen is similar to the iPod® interface. Use the touch-screen, BACK button or the scrolling knob to navigate the menus on the screen.

When the iPod® is playing, touch the "Menu" key to bring up the iPod® interface.

Depending on the iPod® model, the following items may be available on the menu list screen. For further information about each item, see the iPod® Owner's Manual.

- Playlists
- Artists
- Albums
- Genres
- Songs
- Composers
- Audiobooks
- Podcasts

**Shuffle and repeat play mode:**

While the iPod® is playing, the play pattern can be altered so that songs are repeated or played randomly.

**Shuffle:**
Touch the "Shuffle" key to apply a random play pattern to the iPod®. When the Shuffle mode is active, the text is highlighted. To cancel Shuffle mode, touch the "Shuffle" key again until the text is no longer highlighted.

**Repeat:**
Touch the "Repeat" key to apply a repeat play pattern to the iPod®. When the repeat mode is active, the text is highlighted. To cancel Repeat mode, touch the "Repeat" key again until the text is no longer highlighted.

**Seek buttons:**

Press the seek button ⏮ or ⏭ to skip backward or forward one track.

Press and hold the seek button ⏮ or ⏭ for 1.5 seconds while a track is playing to reverse or fast forward the track being played. The track plays at an increased speed while reversing or fast forwarding. When the button is released, the track returns to normal play speed.

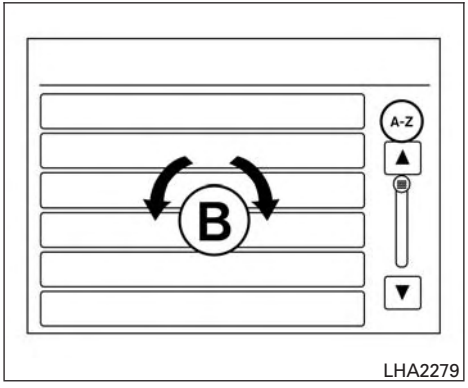


**Scrolling menus:**

While navigating long lists of artists, albums or songs in the music menu, it is possible to scroll the list by the first character in the name. To activate character indexing, touch the "A-Z" key in the upper right corner of the screen. Turn the TUNE knob to choose the number or letter to jump to in the list and then press the AUDIO button.

## BLUETOOTH® STREAMING AUDIO WITHOUT NAVIGATION SYSTEM (if so equipped)

If you have a compatible Bluetooth® audio device that is capable of playing audio files, the device can be connected to the vehicle's audio system so that the audio files on the device play through the vehicle's speakers.

### Connecting Bluetooth® audio

To connect your Bluetooth® audio device to the vehicle, follow the procedure below:

1. Press the button. The system announces the available commands.
2. Say "Connect Phone". The system acknowledges the command and announces the next set of available commands.
3. Say "Add Phone". The system acknowledges the command and asks you to initiate connecting from the phone handset. The connecting procedure of the cellular phone varies according to each cellular phone model. See the cellular phone Owner's Manual for details. You can also visit www.nissanusa.com/bluetooth for instructions on connecting NISSAN recommended cellular phones.

4. When prompted for a Passkey code, enter “1234” from the handset. The Passkey code “1234” has been assigned by NISSAN and cannot be changed.

## Audio main operation

To switch to the Bluetooth® audio mode, press the AUX button repeatedly until the Bluetooth® audio mode is displayed on the screen.

Use the vehicle audio controls or the Bluetooth® device’s controls to play, pause, skip or reverse tracks.

# BLUETOOTH® STREAMING AUDIO WITH NAVIGATION SYSTEM (if so equipped)

If you have a compatible Bluetooth® audio device that is capable of playing audio files, the device can be connected to the vehicle’s audio system so that the audio files on the device play through the vehicle’s speakers.

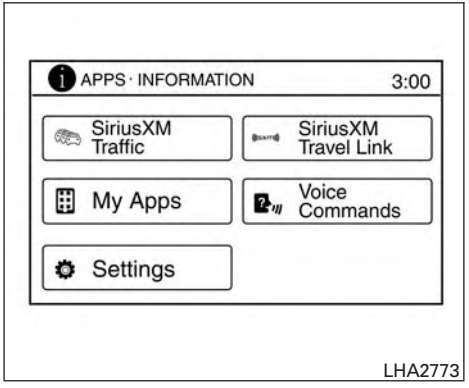

LHA2773

## Connecting Bluetooth® audio

To connect your Bluetooth® audio device to the vehicle, follow the procedure below:

1. Press the [ APPS ] button.
2. Touch the “Settings” key.
3. Touch the “Phone & Bluetooth” key.

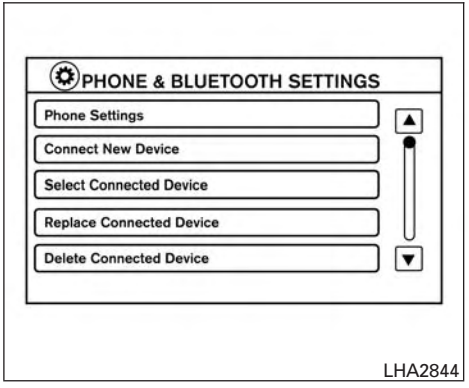

LHA2844

4. Touch the “Connect New Device” key.
5. The system acknowledges the command and asks you to initiate connecting from the phone handset. The connecting procedure of the cellular phone varies according to each cellular phone model. See the cellular phone Owner’s Manual for details. You can also visit www.nissanusa.com/bluetooth for instructions on connecting NISSAN recommended cellular phones.

## Audio main operation

To switch to the Bluetooth® audio mode, press the AUX button repeatedly until the Bluetooth® audio mode is displayed on the screen.

The controls for the Bluetooth® audio are displayed on the screen.

## PANDORA® AUDIO (if so equipped)

The vehicle's audio system is capable of playing audio streaming through a compatible, USB-connected audio device using the Pandora® music service.

## Connecting a device for use with Pandora® audio

Devices capable of streaming Pandora® audio can be connected to the vehicle's audio system via the USB input jack. The USB input jack is located in the center console.

Launch the Pandora® application on the phone and then connect with the USB jack. Once connected, the Pandora® controls will be displayed on the control panel display screen.

## Compatibility

The following iPhone® models are compatible with the system:

- iPhone® 3GS
- iPhone® 4
- iPhone® 4S
- iPhone® 5

The latest Pandora® application should be installed on the phone.

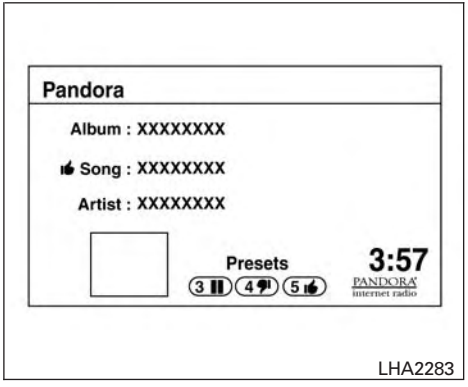


**Models without Navigation System**

## Audio main operation

**Models without Navigation System:**

To switch to the Pandora® audio mode, press the AUX button repeatedly until the Pandora® audio mode is displayed on the screen.

The controls for the Pandora® audio mode are displayed on the screen. Press the audio preset 3 button to pause or play the music.

Press the audio preset 5 button to select " " (thumbs up). Press the audio preset 4 button to select " " (thumbs down).

**NOTE:**

**There is a limit of six skips per station per hour. If a " 👎 " (thumbs down) is given after the skip limit has been reached, the current track will continue to play but the feedback will be saved.**

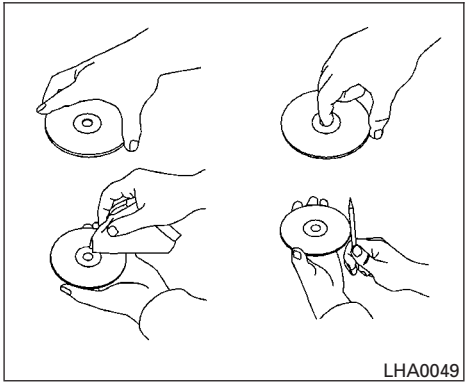


## CD CARE AND CLEANING

- Handle a CD by its edges. Do not bend the disc. Never touch the surface of the disc.
- Always place the discs in the storage case when they are not being used.
- To clean a disc, wipe the surface from the center to the outer edge using a clean, soft cloth. Do not wipe the disc using a circular motion.
- Do not use a conventional record cleaner or alcohol intended for industrial use.
- A new disc may be rough on the inner and outer edges. Remove the rough edges by rubbing the inner and outer edges with the side of a pen or pencil as illustrated.

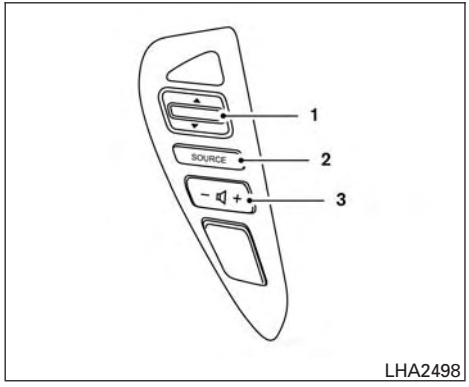


1. Tuning switch
2. Power on and SOURCE select switch
3. Volume control button

## STEERING WHEEL SWITCH FOR AUDIO CONTROL (if so equipped)

The audio system can be operated using the controls on the steering wheel.

### POWER on switch

With the ignition switch in the ACC or ON position, push the SOURCE switch to turn the audio system on.

### SOURCE select switch

Push the source select switch to change the mode in the following sequence:

AM → FM1 → FM2 → XM1 (satellite radio, if so equipped) → XM2 (satellite radio, if so equipped) → XM3 (satellite radio, if so equipped) → CD* → USB/iPod®* (if so equipped) → Bluetooth® Audio* → AUX* → AM.

* These modes are only available when compatible media storage is inserted into the device or connected to the system.

### Volume control switch

Push the volume control switch to increase or decrease the volume.

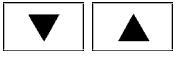

### Tuning switch

While the display is showing a map or audio screen, tilt the Tuning switch upward or downward to select a station, track, CD or folder. For most audio sources, tilting the switch up/down for more than 1.5 seconds provides a different function than a tilting up/down for less than 1.5 seconds.

**AM and FM:**

- Tilt up/down for less than 1.5 seconds to increase or decrease the preset station.
- Tilt up/down for more than 1.5 seconds to seek up or down to the next station.

**XM/SXM (if so equipped):**

- Tilt up/down for less than 1.5 seconds to increase or decrease the preset station.
- Tilt up/down for more than 1.5 seconds to go to the next or previous category.

**iPod® (if so equipped):**

- Tilt up/down for less than 1.5 seconds to increase or decrease the track number.
- Tilt up/down for more than 1.5 seconds to fast forward or rewind the current track.

**CD:**

- Tilt up/down for less than 1.5 seconds to increase or decrease the track number.
- Tilt up/down for more than 1.5 seconds to increase or decrease the folder number (if playing compressed audio files) or to fast forward or rewind the current track.

**USB (if so equipped):**

- Tilt up/down for less than 1.5 seconds to increase or decrease the track number.
- Tilt up/down for more than 1.5 seconds to fast forward or rewind the current track.

**Bluetooth® Audio (if so equipped):**

- Tilt up/down for less than 1.5 seconds to skip ahead or back to the next song.
- Tilt up/down for more than 1.5 seconds to reverse or fast forward the current track.

**Pandora® Audio (if so equipped):**

- Tilt up for less than 1.5 seconds to input "thumbs up" for the current song.
- Tilt down for less than 1.5 seconds to input "thumbs down" for the current song.
- Tilt up for more than 1.5 seconds to skip to the next song (if the maximum of six skips per station per hour has not been exceeded).

## ANTENNA

### Window antenna

The antenna pattern is printed inside the rear window.

**⚠ CAUTION**

- **Do not place metalized film near the rear window glass or attach any metal parts to it. This may cause poor reception or noise.**
- **When cleaning the inside of the rear window, be careful not to scratch or damage the rear window antenna. Lightly wipe along the antenna with a dampened soft cloth.**

## NISSANCONNECT™ APP SMARTPHONE INTEGRATION (if so equipped)

This vehicle is equipped with Smartphone Integration technology. This allows many compatible Smartphone applications to be displayed and easily controlled through the vehicle's touchscreen.

**NOTE:**

**A compatible smartphone and registration is required to use mobile applications or to access connected features of certain vehicle applications.**

### REGISTERING WITH NISSANCONNECT™ APP

To use the Smartphone Integration feature, it is necessary for the user to register. In order to register, visit the NissanConnect™ website, www.nissanusa.com/connect/ and sign up or create an account through the prompts on the NissanConnect™ App. Once registered, download the NissanConnect™ App from your compatible phone's application download source and then log into the application. If you already have an account created through the App, please log in.

## CONNECT PHONE

To use this feature, a compatible smartphone must be connected via Bluetooth® or USB to the vehicle. For more information on connecting your phone, see “Bluetooth® Hands-Free Phone System with Navigation System” in this section.

**NOTE:**

**For Apple iPhones, NissanConnect™ Apps REQUIRES the phone to be plugged in via USB.**

**NOTE:**

**For Android phones, NissanConnect™ Apps REQUIRES the phone to be paired via Bluetooth.**

## APPLICATION DOWNLOAD

Once connected, the NissanConnect™ App will search your phone to determine which compatible applications are currently installed. The user will then choose which apps they want to bring into their vehicle from the list of apps within the “Manage My Apps” section of the NissanConnect™ App on their smartphone. The vehicle will then download the in-vehicle interface for each of these compatible applications. Once downloaded, the user can access their selected smartphone applications through the vehicle touchscreen. For more information on application availability see www.nissanusa.com/connect/

When installing a CB, ham radio or car phone in your vehicle, be sure to observe the following precautions; otherwise, the new equipment may adversely affect the engine control system and other electronic parts.

**⚠ WARNING**

- **A cellular phone should not be used for any purpose while driving so full attention may be given to vehicle operation. Some jurisdictions prohibit the use of cellular phones while driving.**
- **If you must make a call while your vehicle is in motion, the hands free cellular phone operational mode is highly recommended. Exercise extreme caution at all times so full attention may be given to vehicle operation.**
- **If you are unable to devote full attention to vehicle operation while talking on the phone, pull off the road to a safe location and stop your vehicle.**

**CAUTION**

- Keep the antenna as far away as possible from the electronic control modules.
- Keep the antenna wire more than 8 in (20 cm) away from the electronic control system harnesses. Do not route the antenna wire next to any harness.
- Adjust the antenna standing-wave ratio as recommended by the manufacturer.
- Connect the ground wire from the CB radio chassis to the body.
- For details, consult a NISSAN dealer.

## BLUETOOTH® HANDS-FREE PHONE SYSTEM WITHOUT NAVIGATION SYSTEM (Type A) (if so equipped)

**WARNING**

- Use a phone after stopping your vehicle in a safe location. If you have to use a phone while driving, exercise extreme caution at all times so full attention may be given to vehicle operation.
- If you are unable to devote full attention to vehicle operation while talking on the phone, pull off the road to a safe location and stop your vehicle.

**CAUTION**

To avoid discharging the vehicle battery, use a phone after starting the engine.

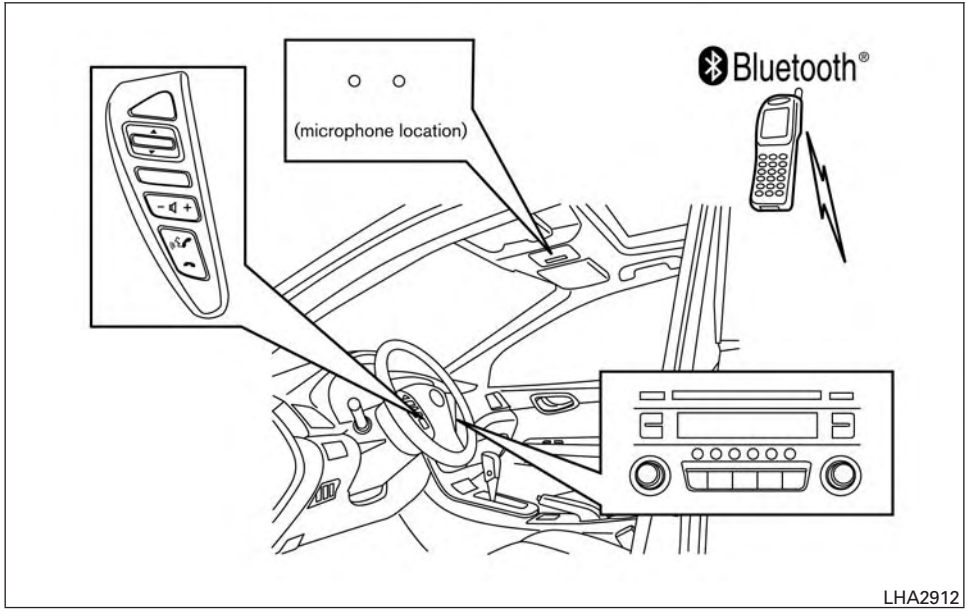


Your NISSAN is equipped with the Bluetooth® Hands-Free Phone System. If you have a compatible Bluetooth® enabled cellular phone, you can set up the wireless connection between your cellular phone and the in-vehicle phone module. With Bluetooth® wireless technology, you can make or receive a hands-free telephone call with your cellular phone in the vehicle.

Once your cellular phone is connected to the in-vehicle phone module, no other phone connecting procedure is required. Your phone is automatically connected with the in-vehicle phone module when the ignition switch is placed in the ON position with the previously connected cellular phone turned on and carried in the vehicle.

**NOTE:**

**Some devices require the user to accept connections to other Bluetooth® devices. If your phone does not connect automatically to the system, consult the phone's Owner's Manual for details on device operation.**

You can connect up to 5 different Bluetooth® cellular phones to the in-vehicle phone module. However, you can talk on only one cellular phone at a time.

Before using the Bluetooth® Hands-Free Phone System, refer to the following notes.

- Set up the wireless connection between a compatible cellular phone and the in-vehicle phone module before using the hands-free phone system.
- Some Bluetooth® enabled cellular phones may not be recognized or work properly. Please visit www.nissanusa.com/bluetooth for a recommended phone list and connecting instructions.

- You will not be able to use a hands-free phone under the following conditions:
  - Your vehicle is outside of the cellular service area.
  - Your vehicle is in an area where it is difficult to receive a cellular signal; such as in a tunnel, in an underground parking garage, near a tall building or in a mountainous area.
  - Your cellular phone is locked to prevent it from being dialed.
- When the radio wave condition is not ideal or ambient sound is too loud, it may be difficult to hear the other person's voice during a call.
- Do not place the cellular phone in an area surrounded by metal or far away from the in-vehicle phone module to prevent tone quality degradation and wireless connection disruption.
- While a cellular phone is connected through the Bluetooth® wireless connection, the battery power of the cellular phone may discharge quicker than usual. The Bluetooth® Hands-Free Phone System cannot charge cellular phones.
- If the hands-free phone system seems to be malfunctioning, see "Troubleshooting guide" in this section. You can also visit www.nissanusa.com/bluetooth for troubleshooting help.
- Some cellular phones or other devices may cause interference or a buzzing noise to come from the audio system speakers. Storing the device in a different location may reduce or eliminate the noise.
- Refer to the cellular phone Owner's Manual regarding the telephone charges, cellular phone antenna and body, etc.

## REGULATORY INFORMATION

FCC Regulatory information

- CAUTION: To maintain compliance with FCC's RF exposure guidelines, use only the supplied antenna. Unauthorized antenna, modification, or attachments could damage the transmitter and may violate FCC regulations.
- Operation is subject to the following two conditions:
  1. This device may not cause interference and
  2. this device must accept any interference, including interference that may cause undesired operation of the device.

IC Regulatory information

- Operation is subject to the following two conditions: (1) this device may not cause interference, and (2) this device must accept any interference, including interference that may cause undesired operation of the device.
- This Class B digital apparatus meets all requirements of the Canadian Interference-Causing Equipment Regulations.

Bluetooth®

BLUETOOTH® is a trademark owned by Bluetooth SIG, Inc. and licensed to Visteon.

## USING THE SYSTEM

The NISSAN Voice Recognition system allows hands-free operation of the Bluetooth® Phone System.

If the vehicle is in motion, some commands may not be available so full attention may be given to vehicle operation.

## Initialization

When the ignition switch is placed in the ON position, NISSAN Voice Recognition is initialized, which takes a few seconds. If the button is pressed before the initialization completes, the system will announce “Hands-free phone system not ready” and will not react to voice commands.

## Operating tips

To get the best performance out of the NISSAN Voice Recognition system, observe the following:

- Keep the interior of the vehicle as quiet as possible. Close the windows to eliminate surrounding noises (traffic noises, vibration sounds, etc.), which may prevent the system from recognizing voice commands correctly.
- Wait until the tone sounds before speaking a command. Otherwise, the command will not be received properly.
- Start speaking a command within 5 seconds after the tone sounds.
- Speak in a natural voice without pausing between words.

## Giving voice commands

To operate NISSAN Voice Recognition, press and release the button located on the steering wheel. After the tone sounds, speak a command.

The command given is picked up by the microphone, and voice feedback is given when the command is accepted.

- If you need to hear the available commands for the current menu again, say “Help” and the system will repeat them.
- If a command is not recognized, the system announces, “Command not recognized. Please try again.” Make sure the command is said exactly as prompted by the system and repeat the command in a clear voice.
- If you want to go back to the previous command, you can say “Go back” or “Correction” any time the system is waiting for a response.
- You can cancel a command when the system is waiting for a response by saying, “Cancel” or “Quit.” The system announces “Cancel” and ends the VR session. You can also press and hold the button on the steering wheel for 5 seconds at any time to end the VR session. Whenever the VR session is cancelled, a double beep is played to indicate you have exited the system.
- If you want to adjust the volume of the voice feedback, press the volume control switches (+ or -) on the steering wheel while being provided with feedback. You can also use the radio volume control knob.

### How to say numbers

NISSAN Voice Recognition requires a certain way to speak numbers in voice commands. Refer to the following rules and examples.

- Either “zero” or “oh” can be used for “0”.

  Example: 1-800-662-6200

  – “One eight oh oh six six two six two oh oh”, or

  – “One eight zero zero six six two six two oh oh”

- Words can be used for the first 4 digits places only.

  Example: 1-800-662-6200

  – “One eight hundred six six two six two oh oh”,

  – NOT “One eight hundred six six two sixty two hundred,” and

  – NOT “One eight oh oh six six two sixty two hundred”

- Numbers can be spoken in small groups. The system will prompt you to continue entering digits, if desired.

  Example: 1-800-662-6200

  – “One eight zero zero”

  The system repeats the numbers and prompts you to enter more.

  – “Six six two”

  The system repeats the numbers and prompts you to enter more.

  – “Six two zero zero”

- Say “pound” for “#”. Say “star” for “*” (available when using the “Special Number” command and the “Send” command during a call).

  See “List of voice commands” and “Special number” in this section for more information.

  Example: 1-555-1212 *123

  – “One five five five one two one two star one two three”

- Say “plus” for “+” (available only when using the “Special Number” command).
- Say “pause” for a 2-second pause (available only when storing a phonebook number).

**NOTE:**

**For best results, say phone numbers as single digits.**

The voice command “Help” is available at any time. Please use the “Help” command to get information on how to use the system.

**Voice Prompt Interrupt**

In most cases you can interrupt the voice feedback to speak the next command by pressing the button on the steering wheel. After interrupting the system, wait for a beep before speaking your command.

**One Shot Call**

To use the system faster, you may speak the second level commands with the main menu command on the main menu. For example, press the button and after the tone say, “Call Redial”.

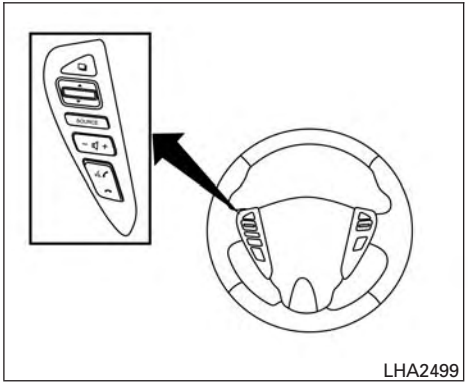


## CONTROL BUTTONS

The control buttons for the Bluetooth® Hands-Free Phone System are located on the steering wheel.

PHONE/SEND

Press the button to initiate a VR session or answer an incoming call.

You can also use the button to interrupt the system feedback and give a command at once. See “List of voice commands” and “During a call” in this section for more information.

PHONE/END
While the Voice Recognition system is active, press and hold the button for 5 seconds to quit the Voice Recognition system at any time.

Tuning switch
While using the Voice Recognition system, tilt the tuning switch up or down to manually control the phone system.

## GETTING STARTED

The following procedures will help you get started using the Bluetooth® Hands-Free Phone System with NISSAN Voice Recognition. For additional command options, refer to “List of voice commands” in this section.

### Choosing a language

You can interact with the Bluetooth® Hands-Free Phone System using English, Spanish or French.

To change the language, perform the following.

1. Press and hold the button for more than 5 seconds.
2. The system announces: “Press the PHONE/SEND ( ) button for the hands-free phone system to enter the voice adaptation mode or press the PHONE/END ( ) button to select a different language.”
3. Press the button.

   For information on voice adaptation, see “Voice Adaptation (VA) mode” in this section.
4. The system announces the current language and gives you the option to change the language to Spanish (in Spanish) or French (in French). To select the current language, press the PHONE/SEND ( ) button. To select a different language, tilt the tuning switch ( or ) up or down.

**NOTE:**

**You must press the button within 5 seconds to change the language.**

5. If you decide not to change the language, do not press either button. After 5 seconds, the VR session will end, and the language will not be changed.

### Connecting procedure

**NOTE:**

**The connecting procedure must be performed when the vehicle is stationary. If the vehicle starts moving during the procedure, the procedure will be cancelled.**

Main Menu
“Connect phone” Ⓐ
“Add phone” Ⓑ
Initiate from handset Ⓒ
Name phone Ⓓ

1. Press the button on the steering wheel. The system announces the available commands.
2. Say: “Connect phone” Ⓐ. The system acknowledges the command and announces the next set of available commands.

3. Say: “Add phone” Ⓑ. The system acknowledges the command and asks you to initiate connecting from the phone handset Ⓒ.

   The connecting procedure of the cellular phone varies according to each cellular phone model. See the cellular phone Owner’s Manual for details. You can also visit www.NissanUSA.com/bluetooth for instructions on connecting NISSAN recommended cellular phones.

   When prompted for a Passkey code, enter “1234” from the handset. The Passkey code “1234” has been assigned by NISSAN and cannot be changed.

4. The system asks you to say a name for the phone Ⓓ.

   If the name is too long or too short, the system tells you, then prompts you for a name again.

   Also, if more than one phone is connected and the name sounds too much like a name already used, the system tells you, then prompts you for a name again.

## Making a call by entering a phone number

Main Menu
- “Call” Ⓐ
  - “Phone Number” Ⓑ
    - Speak the digits Ⓒ
      - “Dial” Ⓓ

1. Press the button on the steering wheel. A tone will sound.
2. Say: “Call” Ⓐ. The system acknowledges the command and announces the next set of available commands.
3. Say “Phone Number” Ⓑ. The system acknowledges the command and announces the next set of available commands.
4. Say the number you wish to call starting with the area code in single digit format Ⓒ. If the system has trouble recognizing the correct phone number, try entering the number in the following groups: 3-digit area code, 3-digit prefix and the last 4-digits. For example, 555-121-3354 can be said as “five five five” as the 1st group, then “one two one” as the 2nd group, and “three three five four” as the 3rd group. For dialing more than 10 digits or any special characters, say “Special Number”. See “How to say numbers” in this section for more information.
5. When you have finished speaking the phone number, the system repeats it back and announces the available commands.
6. Say: “Dial” Ⓓ. The system acknowledges the command and makes the call.

For additional command options, see “List of voice commands” in this section.

## Receiving a call

When you hear the ring tone, press the button on the steering wheel.

Once the call has ended, press the button on the steering wheel.

**NOTE:**

**If you do not wish to take the call when you hear the ring tone, press the button on the steering wheel.**

For additional command options, see “List of voice commands” in this section.

## LIST OF VOICE COMMANDS

```
Main Menu
        "Call"
        "Phonebook"
        "Recent Calls"
        "Connect Phone"
```

When you press and release the button on the steering wheel, you can choose from the commands on the Main Menu. The following pages describe these commands and the commands in each sub-menu.

**Remember to wait for the tone before speaking.**

After the main menu, you can say "Help" to hear the list of commands currently available any time the system is waiting for a response.

If you want to end an action without completing it, you can say "Cancel" or "Quit" at any time the system is waiting for a response. The system will end the VR session. Whenever the VR session is cancelled, a double beep is played to indicate you have exited the system.

If you want to go back to the previous command, you can say "Go back" or "Correction" any time the system is waiting for a response.

### "Call"

```
Main Menu
    "Call"
        (Speak name) Ⓐ
        "Phone Number"
            (Speak Digits) Ⓑ
            "Special Number" Ⓒ
        "Redial" Ⓓ
        "Call Back" Ⓔ
```

**(Speak name) Ⓐ**

If you have stored entries in the phonebook, you can dial a number associated with a name.

See "Phonebook" in this section to learn how to store entries.

When prompted by the system, say the name of the phone book entry you wish to call. The system acknowledges the name.

If there are multiple numbers associated with the name, the system asks you to choose the correct number.

Once you have confirmed the name and location, the system begins the call.

**(Speak Digits) Ⓑ**

When prompted by the system, say the number you wish to call. Refer to "How to say numbers" and "Making a call by entering a phone number" in this section for more details.

**"Special Number" Ⓒ**

For dialing more than 10 digits or any special characters, say "Special Number". When the system acknowledges the command, the system will prompt you to speak the number.

**"Redial" Ⓓ**

Use the Redial command to call the last number that was dialed.

The system acknowledges the command, repeats the number and begins dialing.

If a redial number does not exist, the system announces, "There is no number to redial" and ends the VR session.

**"Call Back" Ⓔ**

Use the Call Back command to dial the number of the last incoming call within the vehicle.

The system acknowledges the command, repeats the number and begins dialing.

If a call back number does not exist, the system announces, “There is no number to call back” and ends the VR session.

**During a call**

During a call there are several command options available. Press the button on the steering wheel to mute the receiving voice and enter commands.

- “Help” — The system announces the available commands.
- “Cancel/Quit” — The system announces “Cancel,” ends the VR session and returns to the call.
- “Send” — Use the Send command to enter numbers, “*” or “#” during a call. For example, if you were directed to dial an extension by an automated system:

  Say: “Send one two three four.”

  The system acknowledges the command and sends the tones associated with the numbers. The system then ends the VR session and returns to the call. Say “star” for “*”, Say “pound” for “#”.
- “Transfer call” — Use the Transfer Call command to transfer the call from the Bluetooth® Hands-Free Phone System to the cellular phone when privacy is desired.

  The system announces, “Transfer call. Call transferred to privacy mode.” The system then ends the VR session.

  To reconnect the call from the cellular phone to the Bluetooth® Hands-Free System, press the button.
- “Mute” — Use the Mute command to mute your voice so the other party cannot hear it. Use the mute command again to unmute your voice.

**NOTE:**

**If a call is ended or the cellular phone network connection is lost while the Mute feature is on, the Mute feature will be reset to “off” for the next call so the other party can hear your voice.**

## “Phonebook” (phones without automatic phonebook download function)

**NOTE:**

**The “Transfer Entry” command is not available when the vehicle is moving.**

Main Menu
- “Phonebook”
  - “Transfer Entry” Ⓐ
  - “Delete Entry” Ⓑ
  - “List Names” Ⓒ

For phones that do not support automatic download of the phonebook (PBAP Bluetooth® profile), the “Phonebook” command is used to manually add entries to the vehicle phonebook.

The phonebook stores up to 40 names for each phone connected to the system.

**NOTE:**

**Each phone has its own separate phonebook. You cannot access Phone A’s phonebook if you are currently connected with Phone B.**

**“Transfer Entry” Ⓐ**

Use the Transfer Entry command to store a new name in the system.

When prompted by the system, say the name you would like to give the new entry.

For example, say: “Mary.”

If the name is too long or too short, the system tells you, then prompts you for a name again.

Also, if the name sounds too much like a name already stored, the system tells you, then prompts you for a name again.

The system will ask you to transfer a phone number stored in the cellular phone's memory.

Enter a phone number by voice command:

For example, say: "five five five one two one two." See "How to say numbers" in this section for more information.

To transfer a phone number stored in the cellular phone's memory:

Say "Transfer entry." The system acknowledges the command and asks you to initiate the transfer from the phone handset. The new contact phone number will be transferred from the cellular phone via the Bluetooth® communication link.

The transfer procedure varies according to each cellular phone. See the cellular phone Owner's Manual for details. You can also visit www.nissanusa.com/bluetooth for instructions on transferring phone numbers from NISSAN recommended cellular phones.

The system repeats the number and prompts you for the next command. When you have finished entering numbers or transferring an entry, choose "Store."

The system confirms the name, location and number.

**"Delete Entry" Ⓑ**

Use the Delete Entry command to erase one entry from the phonebook. After the system recognizes the command, speak the name to delete or say "List Names" to choose an entry.

**"List Names" Ⓒ**

Use the List Names command to hear all the names in the phonebook.

The system recites the phonebook entries but does not include the actual phone numbers. When the playback of the list is complete, the system goes back to the main menu.

You can stop the playback of the list at any time by pressing the button on the steering wheel. The system ends the VR session.

## "Phonebook" (phones with automatic phonebook download function)

**NOTE:**

**The "Transfer Entry" command is not available when the vehicle is moving.**

Main Menu
- "Phonebook"
  - Say a Name
  - "List Names" Ⓐ
  - "Record Name" Ⓑ

For phones that support automatic download of the phonebook (PBAP Bluetooth® profile), the "Phonebook" command is used to manage entries in the vehicle phonebook. You can say the name of an entry at this menu to initiate dialing of that entry.

The phonebook stores up to 1000 names for each phone connected to the system.

When a phone is connected to the system, the phonebook is automatically downloaded to the vehicle. This feature allows you to access your phonebook from the Bluetooth® system and call contacts by name. You can record a custom voice tag for contact names that the system has difficulty recognizing. For more information see "Record name" in this section.

**NOTE:**

**Each phone has its own separate phonebook. You cannot access Phone A's phonebook if you are currently connected with Phone B.**

**"List Names" Ⓐ**

Use the List Names command to hear all the names and locations in the phone book.

The system recites the phone book entries but does not include the actual phone numbers. When the playback of the list is complete, the system goes back to the main menu.

You can stop the playback of the list at any time by pressing the button on the steering wheel. The system ends the VR session. See the "Record name" command in this section for information about recording custom voice tags for list entries that the system has difficulty pronouncing.

**"Record Name" Ⓑ**

The system allows you to record custom voice tags for contact names in the phonebook that the vehicle has difficulty recognizing. This feature can also be used to record voice tags to directly dial an entry with multiple numbers. Up to 40 voice tags can be recorded to the system.

## "Recent Calls"

Main Menu
- "Recent Calls"
  - "Outgoing" Ⓐ
  - "Incoming" Ⓑ
  - "Missed" Ⓒ
  - "Call Back" Ⓓ
  - "Redial" Ⓔ

Use the Recent Calls command to access outgoing, incoming, missed calls and to call back the last incoming call or to redial the last outgoing call.

**"Outgoing" Ⓐ**

Use the Outgoing command to list the outgoing calls made from the vehicle.

**"Incoming" Ⓑ**

Use the Incoming command to list the incoming calls made to the vehicle.

**"Missed" Ⓒ**

Use the Missed command to list the calls made to the vehicle that were not answered.

**"Call Back" Ⓓ**

Use the Call Back command to dial the number of the last incoming call to the vehicle.

**"Redial" Ⓔ**

Use the Redial command to dial the number of the last outgoing call from the vehicle.

## "Connect Phone"

**NOTE:**

**The Add Phone command is not available when the vehicle is moving.**

Main Menu
- "Connect Phone"
  - "Add Phone" Ⓐ
  - "Select Phone" Ⓑ
  - "Delete Phone" Ⓒ
  - "Replace Phone" Ⓓ
  - "Bluetooth OFF" Ⓔ
  - "Phonebook Download OFF" Ⓕ
  - "Display Settings" Ⓖ

Use the Connect Phone commands to manage the phones connecting to the vehicle or to enable the Bluetooth® function on the vehicle.

**“Add Phone” Ⓐ**

Use the Add Phone command to add a phone to the vehicle. See “Connecting procedure” in this section for more information.

**“Select Phone” Ⓑ**

Use the Select Phone command to select from a list of phones connected to the vehicle. The system will list the names assigned to each phone and then prompt you for the phone you wish to select. Only one phone can be active at a time.

**“Delete Phone” Ⓒ**

Use the Delete Phone command to delete a phone that is connected to the vehicle. The system will list the names assigned to each phone and then prompt you for the phone you wish to delete. Deleting a phone from the vehicle will also delete the phonebook for that phone.

**“Replace Phone” Ⓓ**

Use the Replace Phone command to replace an existing phone pairing with a new phone. The system will keep all voice tags assigned to your phonebook.

**“Bluetooth OFF” Ⓔ**

Use the Bluetooth OFF command to prevent a wireless connection to your phone.

**“Phonebook Download OFF” Ⓕ**

Use the Phonebook Download OFF command to turn off the automatic downloading of the handset phonebook to the available (if supported by the cellular phone). When the command is recognized, “Sync Contacts OFF” will appear on the audio display.

To turn the feature back on, say “Phonebook Download”. When the command is recognized, “Sync Contacts ON” will appear on the audio display.

**“Display Settings” Ⓖ**

Use the Display Settings command to control where incoming call notifications are displayed in the vehicle. Say “Driver Only” to have call notifications shown on the vehicle information display only. Say “Both” to have call notifications shown on both the vehicle information display and the center audio display.

To turn the feature back on, say “Phonebook Download”. When the command is recognized, “Sync Contacts ON” will appear on the audio display.

## VOICE ADAPTATION (VA) MODE

Voice Adaptation allows up to two out-of-dialect users to train the system to improve recognition accuracy. By repeating a number of commands, the users can create a voice model of their own voice that is stored in the system. The system is capable of storing a different voice adaptation model for each connected phone.

### Training procedure

The procedure for training a voice is as follows.

1. Position the vehicle in a reasonably quiet outdoor location.
2. Sit in the driver’s seat with the engine running, the parking brake on, and the transmission in P (Park).
3. Press and hold the button for more than 5 seconds.
4. The system announces: “Press the PHONE/SEND ( ) button for the hands-free phone system to enter the voice adaptation mode or press the PHONE/END ( ) button to select a different language.”

5. Press the button.

   For information on selecting a different language, see “Choosing a language” in this section.

6. Voice memory A or memory B is selected automatically. If both memory locations are already in use, the system will prompt you to overwrite one. Follow the instructions provided by the system.
7. When preparation is complete and you are ready to begin, press the button.
8. The VA mode will be explained. Follow the instructions provided by the system.
9. When training is finished, the system will tell you an adequate number of phrases have been recorded.
10. The system will announce that voice adaptation has been completed and the system is ready.

The VA mode will stop if:

- The button is pressed for more than 5 seconds in VA mode.
- The vehicle begins moving during VA mode.
- The ignition switch is placed in the OFF or LOCK position.

## Training phrases

During the VA mode, the system instructs the trainer to say the following phrases. (The system will prompt you for each phrase.)

- phonebook transfer entry
- dial three oh four two nine
- delete call back number
- incoming
- transfer entry
- eight pause nine three two pause seven
- delete all entries
- call seven two four zero nine
- phonebook delete entry
- next entry
- dial star two one seven oh
- yes
- no
- select
- missed
- dial eight five six nine two
- Bluetooth on
- outgoing
- call three one nine oh two
- nine seven pause pause three oh eight
- cancel
- call back number
- call star two zero nine five
- delete phone
- dial eight three zero five one
- record name
- four three pause two nine pause zero
- delete redial number
- phonebook list names
- call eight oh five four one
- correction
- connect phone
- dial seven four oh one eight
- previous entry
- delete
- dial nine seven two six six
- call seven six three oh one
- go back
- call five six two eight zero
- dial six six four three seven

## MANUAL CONTROL

While using the voice recognition system, it is possible to select menu options by using the steering wheel controls instead of speaking voice commands. This can be especially helpful if the noise of driving makes it difficult for the voice recognition system to accurately interpret commands. The manual control mode does not allow dialing a phone number by digits. The user may select an entry from the Phonebook or Recent Calls lists. To re-activate voice recognition, exit the manual control mode by pressing and holding the PHONE/END ( ) button. At that time, pressing the PHONE/SEND ( ) button will start the Hands Free Phone System.

### Operating tips

- To enter manual control mode, start the voice recognition system and tilt the tuning ( ) switch up or down. The system will speak "Showing Manual Options" when manual controls are initially activated.
- To browse the menu options, tilt the tuning ( ) switch up or down. The system will always speak the current menu option. Depending on the audio display, it will also show the current menu option.
- To select the current menu option, press the PHONE/SEND ( ) button.
- To go back to the previous menu, press the PHONE/END ( ) button. If the current menu is the Main Menu, pressing the PHONE/END ( ) button will exit the Phone system.
- To exit the manual control mode, press and hold the PHONE/END ( ) button for 5 seconds.

## TROUBLESHOOTING GUIDE

The system should respond correctly to all voice commands without difficulty. If problems are encountered, try the following solutions.

Where the solutions are listed by number, try each solution in turn, starting with number 1, until the problem is resolved.

| Symptom | Solution |
|---|---|
| System fails to interpret the command correctly. | 1. Ensure that the command is valid. See “List of voice commands” in this section. |
| | 2. Ensure that the command is spoken after the tone. |
| | 3. Speak clearly without pausing between words and at a level appropriate to the ambient noise level in the vehicle. |
| | 4. Ensure that the ambient noise level is not excessive (for example, windows open or defroster on). NOTE: If it is too noisy to use the phone, it is likely that the voice commands will not be recognized. |
| | 5. If more than one command was said at a time, try saying the commands separately. |
| | 6. If the system consistently fails to recognize commands, the voice training procedure should be carried out to improve the recognition response for the speaker. See “Voice Adaptation (VA) mode” in this section. |
| The system consistently selects the wrong entry from the phone book. | 1. Ensure that the phone book entry name requested matches what was originally stored. This can be confirmed by using the “List Names” command. See “Phonebook” in this section. |
| | 2. Replace one of the names being confused with a new name. |

## BLUETOOTH® HANDS-FREE PHONE SYSTEM WITHOUT NAVIGATION SYSTEM (Type B) (if so equipped)

**⚠ WARNING**

- **Use a phone after stopping your vehicle in a safe location. If you have to use a phone while driving, exercise extreme caution at all times so full attention may be given to vehicle operation.**
- **If you are unable to devote full attention to vehicle operation while talking on the phone, pull off the road to a safe location and stop your vehicle.**

**⚠ CAUTION**

**To avoid discharging the vehicle battery, use a phone after starting the engine.**

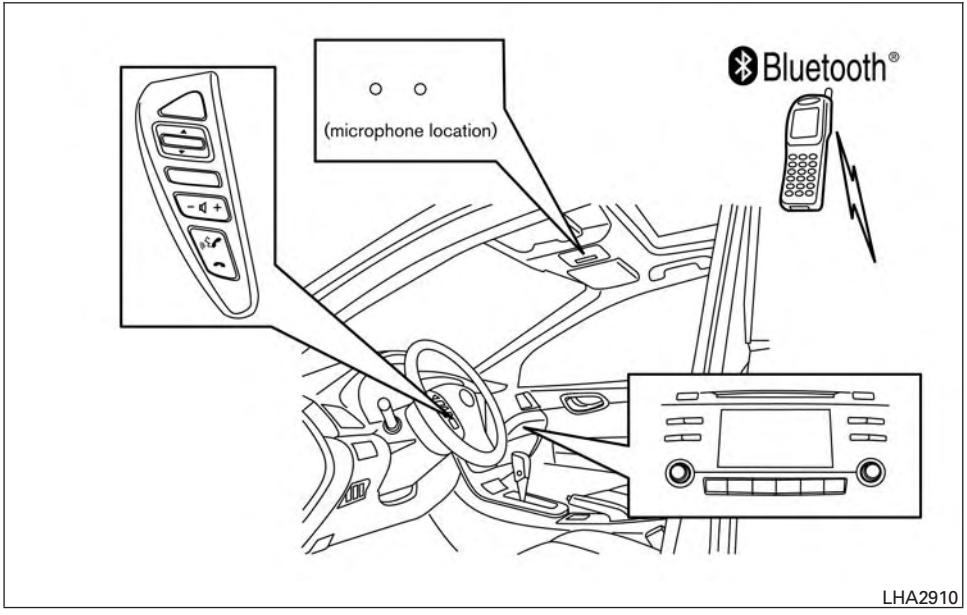


Your NISSAN is equipped with the Bluetooth® Hands-Free Phone System. If you have a compatible Bluetooth® enabled cellular phone, you can set up the wireless connection between your cellular phone and the in-vehicle phone module. With Bluetooth® wireless technology, you can make or receive a hands-free telephone call with your cellular phone in the vehicle.

Once your cellular phone is connected to the in-vehicle phone module, no other phone connecting procedure is required. Your phone is automatically connected with the in-vehicle

phone module when the ignition switch is placed in the ON position with the previously connected cellular phone turned on and carried in the vehicle.

**NOTE:**

**Some devices require the user to accept connections to other Bluetooth® devices. If your phone does not connect automatic ally to the system, consult the phone's Owner's Manual for details on device operation.**

You can connect up to 5 different Bluetooth® cellular phones to the in-vehicle phone module. However, you can talk on only one cellular phone at a time.

Before using the Bluetooth® Hands-Free Phone System, refer to the following notes.

- Set up the wireless connection between a compatible cellular phone and the in-vehicle phone module before using the hands-free phone system.
- Some Bluetooth® enabled cellular phones may not be recognized or work properly. Please visit www.nissanusa.com/bluetooth for a recommended phone list and connecting instructions.
- You will not be able to use a hands-free phone under the following conditions:
  - Your vehicle is outside of the cellular service area.
  - Your vehicle is in an area where it is difficult to receive a cellular signal; such as in a tunnel, in an underground parking garage, near a tall building or in a mountainous area.
  - Your cellular phone is locked to prevent it from being dialed.
- When the radio wave condition is not ideal or ambient sound is too loud, it may be difficult to hear the other person's voice during a call.
- Do not place the cellular phone in an area surrounded by metal or far away from the in-vehicle phone module to prevent tone quality degradation and wireless connection disruption.
- While a cellular phone is connected through the Bluetooth® wireless connection, the battery power of the cellular phone may discharge quicker than usual. The Bluetooth® Hands-Free Phone System cannot charge cellular phones.
- If the hands-free phone system seems to be malfunctioning, see "Troubleshooting guide" in this section. You can also visit www.nissanusa.com/bluetooth for troubleshooting help.
- Some cellular phones or other devices may cause interference or a buzzing noise to come from the audio system speakers. Storing the device in a different location may reduce or eliminate the noise.
- Refer to the cellular phone Owner's Manual regarding the telephone charges, cellular phone antenna and body, etc.

## REGULATORY INFORMATION

FCC Regulatory information

- CAUTION: To maintain compliance with FCC's RF exposure guidelines, use only the supplied antenna. Unauthorized antenna, modification, or attachments could damage the transmitter and may violate FCC regulations.
- Operation is subject to the following two conditions:
  1. This device may not cause interference and
  2. this device must accept any interference, including interference that may cause undesired operation of the device.

IC Regulatory information

– Operation is subject to the following two conditions: (1) this device may not cause interference, and (2) this device must accept any interference, including interference that may cause undesired operation of the device.

– This Class B digital apparatus meets all requirements of the Canadian Interference-Causing Equipment Regulations.

BLUETOOTH® is a trademark owned by Bluetooth SIG, Inc. and licensed to Visteon.

## USING THE SYSTEM

The NISSAN Voice Recognition system allows hands-free operation of the Bluetooth® Phone System.

If the vehicle is in motion, some commands may not be available so full attention may be given to vehicle operation.

### Initialization

When the ignition switch is placed in the ON position, NISSAN Voice Recognition is initialized, which takes a few seconds. If the button is pressed before the initialization completes, the system will announce “Hands-free phone system not ready” and will not react to voice commands.

### Operating tips

To get the best performance out of the NISSAN Voice Recognition system, observe the following:

- Keep the interior of the vehicle as quiet as possible. Close the windows to eliminate surrounding noises (traffic noises, vibration sounds, etc.), which may prevent the system from recognizing voice commands correctly.
- Wait until the tone sounds before speaking a command. Otherwise, the command will not be received properly.
- Start speaking a command within 5 seconds after the tone sounds.
- Speak in a natural voice without pausing between words.

### Giving voice commands

To operate NISSAN Voice Recognition, press and release the button located on the steering wheel. After the tone sounds, speak a command.

The command given is picked up by the microphone, and voice feedback is given when the command is accepted.

- If you need to hear the available commands for the current menu again, say “Help” and the system will repeat them.
- If a command is not recognized, the system announces, “Command not recognized. Please try again.” Make sure the command is said exactly as prompted by the system and repeat the command in a clear voice.
- If you want to go back to the previous command, you can say “Go back” or “Correction” any time the system is waiting for a response.

- You can cancel a command when the system is waiting for a response by saying, “Cancel” or “Quit.” The system announces “Cancel” and ends the VR session. You can also press and hold the button on the steering wheel for 5 seconds at any time to end the VR session. Whenever the VR session is cancelled, a double beep is played to indicate you have exited the system.
- If you want to adjust the volume of the voice feedback, press the volume control switches (+ or -) on the steering wheel while being provided with feedback. You can also use the radio volume control knob.

**Voice Prompt Interrupt**

In most cases you can interrupt the voice feedback to speak the next command by pressing the button on the steering wheel. After interrupting the system, wait for a beep before speaking your command.

**One Shot Call**

To use the system faster, you may speak the second level commands with the main menu command on the main menu. For example, press the button and after the tone say, “Call Redial”.

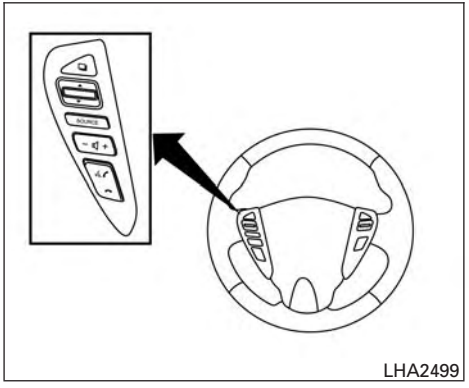


## CONTROL BUTTONS

The control buttons for the Bluetooth® Hands-Free Phone System are located on the steering wheel.

PHONE/SEND

Press the button to initiate a VR session or answer an incoming call.

You can also use the button to interrupt the system feedback and give a command at once. See “List of voice commands” and “During a call” in this section for more information.

PHONE/END

While the voice recognition system is active, press and hold the button for 5 seconds to quit the voice recognition system at any time.

Tuning switch

While using the voice recognition system, tilt the tuning switch up or down to manually control the phone system.

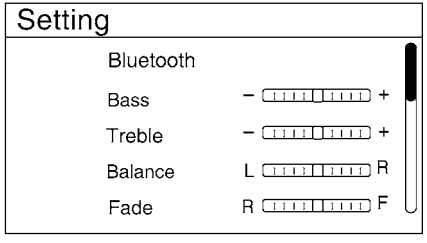


## CONNECTING PROCEDURE

**NOTE:**

**The connecting procedure must be performed when the vehicle is stationary. If the vehicle starts moving during the procedure, the procedure will be cancelled.**

To connect a phone to the Bluetooth® Hands-Free Phone System:

1. Press the SETTING button.
2. Use the TUNE/FOLDER knob to select “Bluetooth” and then press the ENTER button.

| Menu Item | | Result |
|---|---|---|
| Bluetooth ON/OFF | | Allows user to switch Bluetooth on and off. Bluetooth must be turned on in order to connect device. |
| | On | Turns Bluetooth functionality on |
| | Off | Turns Bluetooth functionality off |
| Add Phone or Device | | Upon pressing this button, a message with a PIN appears on the screen. operate the Bluetooth phone to enter the PIN and complete the connection process. |
| Replace Phone | | Replace the phone currently connected to the system. This option allows the user to keep any voicetags that were recorded using the previous phone if vehicle is equipped with voice recognition. |

The connecting procedure varies according to each phone. See the phone’s Owner’s Manual for details. You can also visit www.nissanusa.com/bluetooth or call the NISSAN Consumer Affairs Department for instructions on connecting recommended cellular phones.

## VOICE COMMANDS

Voice commands can be used to operate the Bluetooth® Hands-Free Phone System. Press the button and say “Phone” to bring up the phone command menu. The available options are:

- Call
- Phonebook
- Recent Calls
- Send Text
- Read Text
- Select Phone

### “Call”

For more information on the “Call” command, see “Making a call” in this section.

### “Phonebook”

The following commands are available under “Phonebook”:

- (a name)
  Say a name in the phonebook to bring up a list of options for that phonebook entry. The system will say the name it interpreted based on the voice command provided. If the name is incorrect, say “Correction” to hear another name.
  Once the correct phonebook entry is identified, say “Dial” to dial the number or “Send Text” to send a text message to that number. Say “Record Name” to record a name for the phonebook entry. Say “Delete Recording” to delete a recorded name for the phonebook entry.
- List Names
  Speak this command to have the system list the names in the phonebook one by one alphabetically. Say “Dial” to dial the number of the current name or “Send Text” to send a text message to that number. Say “Next Entry” or “Previous Entry” to move through the list alphabetically. Say “Record Name” to record a name for the current phonebook entry. Say “Delete Recording” to delete a recorded name for the current phonebook entry.
- Transfer Entry
  This command can be used to transfer multiple contacts at a time. To enable manual contact transfer capability, set “Phonebook Download” to “Off” in the Setting menu. The ability to transfer contacts via the OPP Bluetooth profile depends on your mobile phone. See your phone’s Owner’s Manual for details and instructions.
- Delete Entry
  Speak this command to delete an entry in the phonebook. Choose an entry to delete by speaking the desired name or say “List Names”.

### “Recent Calls”

The following commands are available under “Recent Calls”:

- Incoming Calls
  Speak this command to list the last five incoming calls to the vehicle. If the call is from an entry in the phonebook, the name will be displayed. Otherwise, the phone number of the incoming call will be displayed.
  Say “Dial” to call the number or “Send Text” to send a text message to that number. Say “Next Entry” or “Previous Entry” to move through the list of incoming calls.

- Missed Calls
  Speak this command to list the last five missed calls to the vehicle. If the call is from an entry in the phonebook, the name will be displayed. Otherwise, the phone number of the missed call will be displayed.
  Say “Dial” to call the number or “Send Text” to send a text message to that number. Say “Next Entry” or “Previous Entry” to move through the list of missed calls.
- Outgoing Calls
  Speak this command to list the last five outgoing calls from the vehicle. If the call was to an entry in the phonebook, the name will be displayed. Otherwise, the phone number of the outgoing call will be displayed.
  Say “Dial” to call the number or “Send Text” to send a text message to that number. Say “Next Entry” or “Previous Entry” to move through the list of outgoing calls.
- Redial
  Speak this command to call the last number dialed.
- Call Back
  Speak this command to call the number of the last incoming call to the vehicle.

### “Send Text / Read Text”

For more information on these commands, see “Text messaging” in this section.

### “Select Phone”

Speak this command to select a phone to use from a list of those phones connected to the vehicle.

## MAKING A CALL

To make a call from a phone connected to the vehicle’s Bluetooth® Hands-Free Phone System:

**NOTE:**

**Available commands different if system is in Manual Control mode. See “Manual Control” in this section for more information.**

1. Press the button.
2. The system will prompt you for a command. Say “Call”.
3. Select one of the available voice commands to continue:

- “(a name)” — Speak the name of a phonebook entry to place a call to that entry. The system will respond with the name it interpreted from your command and will prompt you to confirm that the name is correct. Say “Yes” to initiate the call or “No” to hear another name from the phonebook.
- “List Names” – Speak this command to have the system list the names in the phonebook one by one alphabetically. Say “Next Entry” or “Previous Entry” to move through the list alphabetically. Say “Select” once desired contact is heard and displayed on screen. Say “Dial” to dial the number of the current name or say “Record Name” to record a name for the current phonebook entry to be assigned.

- “Phone Number” — Speak this command to place a call by inputting numbers. For 7– to 10–digit phone number, speak the numbers. Say “Correction” at any time in the process to correct a misspoken or misinterpreted number. For phone numbers with more digits or special characters, say “Special Number”, then speak the digits. Up to 24 digits can be entered. Available special characters are “start”, “pound”, “plus”, and “pause”. When finished, say “Dial” to initiate the call. Say “Correction” at any time in the process to correct a misspoken or misinterpreted number or character.
- “Redial” – Speak this command to dial the number of the last outgoing call. The system will display “Re-dialing <name/number>”. The name of the phonebook entry will be displayed if it available, otherwise the number being re-dialed will be displayed.
- “Call Back” – Speak this command to dial the number of the last incoming call. The system will display “Calling back <name/number>”. The name of the phonebook entry will be displayed if it available, otherwise the number being called back will be displayed.

## RECEIVING A CALL

When a call is received by the phone connected to the vehicle’s Bluetooth® Hands-Free Phone System, the call information is displayed on either the vehicle information display or both the vehicle information display and he control panel display.

Press the button to accept the call. Press the button to reject the call.

## DURING A CALL

While a call is active, press the button to access additional options. Speak one of the following commands:

- “(numbers)” – Speak numbers and then say “Send” or say “Correction” to change the numbers entered.
- “Mute On” or “Mute Off” – Speak the command to mute or unmute the system.
- “Transfer Call” – Speak this command to transfer the call to the handset. To transfer the call back from the handset to the Bluetooth® Hands-Free Phone System, press the button and confirm when prompted.

If supported by the phone, the Bluetooth® Hands-Free Phone System allows for call waiting functionality. If a call is received while another call is already active, a message will be displayed on the screen. Press the button to hold the active call and switch to the second call. Press the button to reject the second call.

While the second call is active, pressing the button will allow the same commands that available during any call as well as two additional commands:

- “Switch Call” – Speak this command to hold the second call and switch back to the original call.
- “End Other Call” – Speak this command to stay with the second call and end the original call.

Press the button to accept the call. Press the button to reject the call.

## ENDING A CALL

To end an active call, press the button.

## TEXT MESSAGING

**⚠ WARNING**

- **Laws in some jurisdictions may restrict the use of some of the applications and features, such as social networking and texting.**
- **Laws in some jurisdictions may restrict the use of "Text-to-Speech". Check local regulations before using this feature.**
- **Use the text messaging feature after stopping your vehicle in a safe location. If you have to use the feature while driving, exercise extreme caution at all times so full attention may be given to vehicle operation.**
- **If you are unable to devote full attention to vehicle operation while using the text messaging feature, pull off the road to a safe location and stop your vehicle.**

**NOTE:**

**This feature is automatically disabled if the connected device does not support the Message Access Profile (MAP). See the phone's Owner's Manual for details and instructions.**

The system allows for the sending and receiving of text messages through the vehicle interface.

**Sending a text message:**

1. Press the button.
2. Say "Send Text".
3. The system will provide a list of available commands in order to determine the recipient of the text message. Choose from the following:
   - (a name)
   - Number
   - Incoming Calls
   - Outgoing Calls
   - Missed Calls

   For more information about these options, see "Voice commands" in this section.
4. Once a recipient is chosen, the system prompts for which message to send. Five predefined messages are available as well as three custom messages. To choose one of the predefined messages, speak one of the following:
   - "Driving, can't text"
   - "Call me"
   - "On my way"
   - "Running late"
   - "Okay"

   To send one of the custom messages, say "Custom Message". If more than one custom message is stored, the system will prompt for the number of the desired custom message. For more information on setting and managing custom text messages, see "Bluetooth® settings" in this section.

**Reading a received text message:**

1. Press the button.
2. Say "Read Text".

The text message, sender and delivery time are shown on the screen. Use the tuning switch on the steering wheel to scroll through all text messages if more than one are available. Press the button to exit the text message screen. Press the button to access the following options for replying to the text message:

- Call Back
  Speak this command to call the sender of the text message using the Bluetooth® Hands-Free Phone System.

- Send Text
  Speak this command to send a text message response to the sender of the text message.
- Read Text
  Speak this command to read the text message again.
- Previous Text
  Speak this command to move to the previous text message (if available).
- Next Text
  Speak this command to move to the next text message (if available).

**NOTE:**

**Text messages are only displayed if the vehicle speed is less than 5 mph (8 km/h).**

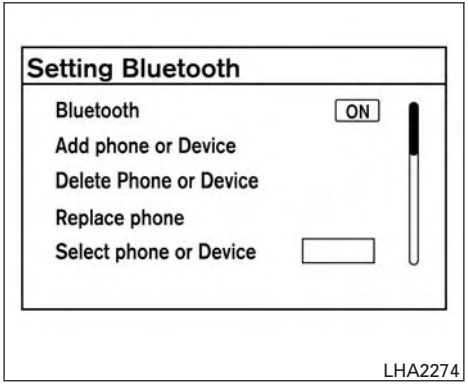


## BLUETOOTH® SETTINGS

To access and adjust the settings for the Bluetooth® Hands-Free Phone System:

1. Press the SETTING button.
2. Use the TUNE/SCROLL knob to select "Bluetooth" and then press the ENTER button:

- Bluetooth
  Select "On" or "Off" to turn the vehicle's Bluetooth® system on or off.
- Add Phone or Device
  To connect a phone to the system, see "Connecting procedure" in this section.
- Delete Phone or Device
  Select to delete a phone from the displayed list. The system will ask to confirm before deleting the phone.
- Replace Phone
  Select to replace a phone from the displayed list. When a selection is made, the system will ask to confirm before proceeding. The recorded phonebook for the phone being deleted will be saved as long as the new phone's phonebook is the same as the old phone's phonebook.
- Select Phone or Device
  Select to connect to a previously connected phone from the displayed list.
- Show Incoming Calls
  Select "Driver Only" to have incoming call information displayed only in the vehicle information display. Select "Both" to have incoming call information displayed in both the vehicle information display and the center display screen.
- Phonebook Download
  Select to turn on or off the automatic download of a connected phone's phonebook.
- Text Message
  Select to turn on or off the vehicle's text messaging feature.

- New Text Sound
  Select to adjust the volume of the sound that plays when a new text is received by a phone connected to the Bluetooth® Hands-Free Phone System. The setting all the way to the left indicates that the new text sound will be muted.
- Show Incoming Text
  Select "Driver Only" to have incoming text messages displayed only in the vehicle information display. Select "Both" to have incoming text messages displayed in both the vehicle information display and the center display screen. Select "None" to have no display of incoming text messages.
- Edit Custom Messages
  Select to set a custom message that will be available with the standard options when sending a text message. To set a custom message, send a text message to your own phone number while the phone is connected to the system. Three custom messages can be set. Custom messages can only be set while the vehicle is stationary.
- Auto Reply
  Select to turn on or off the Auto Reply function. When enabled, the vehicle will automatically send a predefined text message to the sender when a text message is received while driving.
- Auto Reply Message
  Select to choose the message that is sent when the Auto Reply function is enabled. Choose from "I'm Driving" or one of the three custom messages stored in the system.
- Vehicle Signature On/Off
  Select to choose whether or not the vehicle signature is added to outgoing text messages from the vehicle. This message cannot be changed or customized.

## MANUAL CONTROL

While using the Voice Recognition system, it is possible to select menu options by using the steering wheel controls instead of speaking voice commands. The manual control mode does not allow dialing a phone number by digits. The user may select an entry from the Phonebook or Recent Calls lists. To re-activate Voice Recognition, exit the manual control mode by pressing and holding the PHONE/END ( ) button. At that time, pressing the PHONE/SEND ( ) button will start the Hands Free Phone System.

**WARNING**

- **Use a phone after stopping your vehicle in a safe location. If you have to use a phone while driving, exercise extreme caution at all times so full attention may be given to vehicle operation.**
- **If you are unable to devote full attention to vehicle operation while talking on the phone, pull off the road to a safe location and stop your vehicle.**

**CAUTION**

**To avoid discharging the vehicle battery, use a phone after starting the engine.**

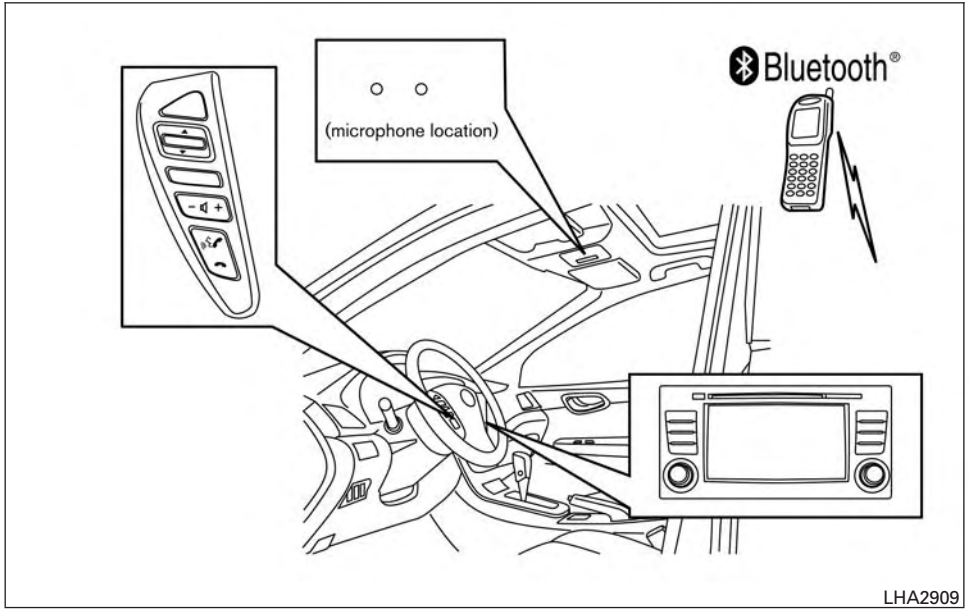


Your NISSAN is equipped with the Bluetooth® Hands-Free Phone System. If you have a compatible Bluetooth® enabled cellular phone, you can set up the wireless connection between your cellular phone and the in-vehicle phone module. With Bluetooth® wireless technology, you can make or receive a hands-free telephone call with your cellular phone in the vehicle.

Once your cellular phone is connected to the in-vehicle phone module, no other phone connecting procedure is required. Your phone is automatically connected with the in-vehicle phone module when the ignition switch is placed in the ON position with the connected cellular phone turned on and carried in the vehicle.

You can register up to 5 different Bluetooth® cellular phones to the in-vehicle phone module. However, you can talk on only one cellular phone at a time.

NISSAN Voice Recognition system supports the phone commands, so dialing a phone number using your voice is possible. For more details, see “NISSAN Voice Recognition System” in this section.

Before using the Bluetooth® Hands-Free Phone System, refer to the following notes.

- Set up the wireless connection between a cellular phone and the in-vehicle phone module before using the hands-free phone system.
- Some Bluetooth® enabled cellular phones may not be recognized by the in-vehicle phone module. Please visit www.nissanusa.com/bluetooth for a recommended phone list and connecting.
- You will not be able to use a hands-free phone under the following conditions:
  - Your vehicle is outside of the cellular service area.

– Your vehicle is in an area where it is difficult to receive cellular signal; such as in a tunnel, in an underground parking garage, near a tall building or in a mountainous area.

– Your cellular phone is locked to prevent it from being dialed.

- When the radio wave condition is not ideal or ambient sound is too loud, it may be difficult to hear the other person's voice during a call.
- Immediately after the ignition switch is placed in the ON position, it may be impossible to receive a call for a short period of time.
- Do not place the cellular phone in an area surrounded by metal or far away from the in-vehicle phone module to prevent tone quality degradation and wireless connection disruption.
- While a cellular phone is connected through the Bluetooth® wireless connection, the battery power of the cellular phone may discharge quicker than usual. The Bluetooth® Hands-Free Phone System cannot charge cellular phones.
- If the hands-free phone system seems to be malfunctioning, see "Troubleshooting guide" in this section. You can also visit www.nissanusa.com/bluetooth for troubleshooting help.
- Some cellular phones or other devices may cause interference or a buzzing noise to come from the audio system speakers. Storing the device in a different location may reduce or eliminate the noise.
- Refer to the cellular phone owner's manual regarding the telephone charges, cellular phone antenna and body, etc.
- The signal strength display on the monitor will not coincide with the signal strength display of some cellular phones.

## REGULATORY INFORMATION

FCC Regulatory information

– CAUTION: To maintain compliance with FCC's RF exposure guidelines, use only the supplied antenna. Unauthorized antenna, modification, or attachments could damage the transmitter and may violate FCC regulations.

– Operation is subject to the following two conditions:

1. This device may not cause interference and
2. this device must accept any interference, including interference that may cause undesired operation of the device.

IC Regulatory information

– Operation is subject to the following two conditions: (1) this device may not cause interference, and (2) this device must accept any interference, including interference that may cause undesired operation of the device.

– This Class B digital apparatus meets all requirements of the Canadian Interference-Causing Equipment Regulations.

Bluetooth®

BLUETOOTH® is a trademark owned by Bluetooth SIG, Inc. and licensed to Bosch.

## VOICE COMMANDS

You can use voice commands to operate various Bluetooth® Hands-Free Phone System features using the NISSAN Voice Recognition system. For more details, see "NISSAN Voice Recognition System" in this section.

## Voice Prompt Interrupt

While using the voice recognition system, the system voice can be interrupted to allow the user to speak commands. While the system is speaking, press the button on the steering wheel. The system voice will stop and a tone will be heard. After the tone, speak desired command (displayed on the touch-screen).

## One Shot Call

To use the system faster, you may speak the second level commands with the main menu command on the main menu. For example, press the button and after the tone say, “Call Redial”.

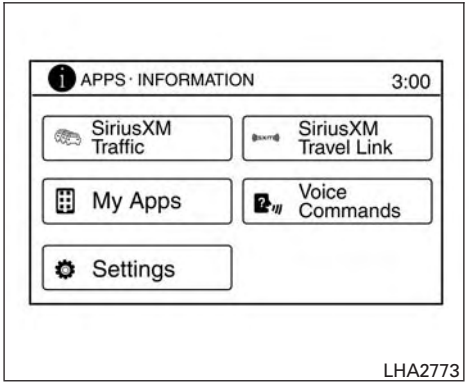


## CONNECTING PROCEDURE

**NOTE:**

**The connecting procedure must be performed when the vehicle is stationary. If the vehicle starts moving during the procedure, the procedure will be cancelled.**

1. Press the [APPS] button on the control panel.
2. Touch the “Settings” key.
3. Touch the “Phone & Bluetooth” key.
4. Touch the “Connect New Device” key.
5. Initiate the connecting process from the handset. The system will display the message: “Is PIN XXXXXX displayed on your Bluetooth device?”. If the PIN is displayed on your Bluetooth® device, select “Yes” to complete the pairing process.

For more information, see the Bluetooth® device’s Owner’s Manual.

## VEHICLE PHONEBOOK

To access the vehicle phonebook:

1. Press the button on the control panel.
2. Touch the “Phonebook” key.
3. Choose the desired entry from the displayed list.
4. The number of the entry will be displayed on the screen. Touch the number to initiate dialing.

**NOTE:**

**To scroll quickly through the list, touch the “A-Z” key in the upper right corner of the screen. Turn the TUNE/SCROLL knob to choose a letter or number and then press ENTER. The list will move to the first entry that begins with that number or letter.**

## MAKING A CALL

To make a call, follow the procedure below:

1. Press the button on the control panel. The “Phone” screen will appear on the display.
2. Select one of the following options to make a call:

- “Phonebook”: Select the name from an entry stored in the vehicle phonebook.
- “Call Lists”: Select the name from the incoming, outgoing or missed.
- “Redial”: Dial the last outgoing call from the vehicle.
- “ ”: Input the phone number manually using a keypad displayed on the screen. For information on how to use the touch-screen, see “How to use the touch-screen” in this section.

## RECEIVING A CALL

When a call is placed to the connected phone, the display will change to phone mode.

To accept the incoming call, either:

- Press the button on the steering wheel, or
- Touch the green phone icon on the screen.

To reject the incoming call, either:

- Press the button on the steering wheel, or
- Touch the red phone icon on the screen.

## DURING A CALL

While a call is active, the following options are available on the screen:

- “Handset”
  Select this option to switch control of the phone call over to the handset.
- “Mute Mic.”
  Select this option to mute the microphone. Select again to unmute the microphone.
- Red phone ( ) icon
  Select to end the phone call.

## ENDING A CALL

To end a phone call, select the red phone ( ) icon on the screen or press the button on the steering wheel.

## TEXT MESSAGING

**WARNING**

- **Laws in some jurisdictions may restrict the use of some of the applications and features, such as social networking and texting. Check local regulations for any requirements.**
- **Laws in some jurisdictions may restrict the use of “Text-to-Speech”. Check local regulations before using this feature.**
- **Use the text messaging feature after stopping your vehicle in a safe location. If you have to use the feature while driving, exercise extreme caution at all times so full attention may be given to vehicle operation.**
- **If you are unable to devote full attention to vehicle operation while using the text messaging feature, pull off the road to a safe location and stop your vehicle.**

The system allows for the sending and receiving of text messages through the vehicle interface.

**Sending a text message:**

1. Press the button on the steering wheel.
2. Say “Phone” after the tone.
3. Say “Send Text” after the tone.
4. The system will provide a list of available commands in order to determine the recipient of the text message. Choose from the following:
   - To (a name)
   - Enter Number
   - Missed Calls
   - Incoming Calls
   - Outgoing Calls

   For more information about these options, see “Voice commands” in this section.
5. Once a recipient is chosen, the system prompts for which message to send. Nine predefined messages are available as well as three custom messages. To choose one of the predefined messages, speak one of the following after the tone:
   - “Driving, can’t text”
   - “Call me”
   - “On my way”
   - “Running late”
   - “Okay”
   - “Yes”
   - “No”
   - “Where are you?”
   - “When?”

   To send one of the custom messages, say “Custom Messages”. If more than one custom message is stored, the system will prompt for the number of the desired custom message. For more information on setting and managing custom text messages, see “Bluetooth® settings” in this section.

**Reading a received text message:**

1. Press the button on the steering wheel.
2. Say “Phone” after the tone.
3. Say “Read Text” after the tone.

The text message, sender and delivery time are shown on the screen. Use the tuning switch to scroll through all text messages if more than one are available. Press the button to exit the text message screen. Press the button to access the following options for replying to the text message:

- Call Back
  Speak this command to call the sender of the text message using the Bluetooth® Hands-Free Phone System.
- Send Text
  Speak this command to send a text message response to the sender of the text message.
- Read Text
  Speak this command to read the text message again.
- Previous Text
  Speak this command to move to the previous text message (if available).
- Next Text
  Speak this command to move to the next text message (if available).

**NOTE:**

**Text messages are only displayed if the vehicle speed is less than 5 mph (8 km/h).**

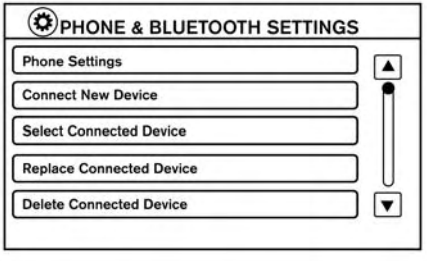

LHA2844

## BLUETOOTH® SETTINGS

To access the phone settings:

1. Press the [ APPS ] button.
2. Touch the “Settings” key.
3. Touch the “Phone & Bluetooth” key.

| Menu Item | Result |
|---|---|
| Phone Settings | See “Phone settings” in this section for more information. |
| Connect New Device | Touch to connect a new Bluetooth® device to the Bluetooth® Hands-Free Phone System. |
| Select Connected Device | Touch to choose a Bluetooth® device from a list of those devices connected to the Bluetooth® Hands-Free Phone System. |
| Replace Connected Device | Touch to replace a Bluetooth® device from a list of those devices connected to the Bluetooth® Hands-Free Phone System. |
| Delete Connected Device | Touch to delete a Bluetooth® device from a list of those devices connected to the Bluetooth® Hands-Free Phone System. |
| Bluetooth | Touch to toggle Bluetooth® on and off. |

## PHONE SETTINGS

To access the phone settings:

1. Press the [ APPS ] button.
2. Touch the “Settings” key.
3. Touch the “Phone & Bluetooth” key.
4. Touch the “Phone Settings” key and adjust the following settings as desired:

- Sort Phonebook By:
  Touch “First Name” or “Last Name” to choose how phonebook entries are alphabetically displayed on the screen.
- Use Phonebook From:
  Touch “Handset” to use the phone’s phonebook. Select “SIM” to use the phonebook on the SIM card. Touch “Both” to use both sources.
- Download Phonebook Now:
  Touch to download the phonebook to the vehicle from the chosen source.
- Record Name for Phonebook Entry:
  Touch to record a name for a phonebook entry for use with the NISSAN Voice Recognition System.
- Phone Notifications for:
  Touch “Driver” to have phone notifications shown in the vehicle information display. Touch “Both” to have phone notifications shown in both the vehicle information display and the center display screen.
- Text Messaging:
  Touch to toggle the text message functionality on or off.
- Show Incoming Text for:
  Touch “Driver” to have incoming text notifications shown in the vehicle information display. Touch “Both” to have text notifications shown in both the vehicle information display and the center display screen. Touch “Off” to turn off all text notifications.
- Auto Reply:
  Touch to toggle the auto reply functionality on or off.
- Auto Reply Message:
  Touch to indicate preferred message to be sent when “Auto Reply” function is activated.
- Use Vehicle’s Signature:
  Touch to toggle on or off the addition of the vehicle signature to outgoing messages.
- Custom Text Messages:
  Touch this option to select a custom message to edit. There are 4 customer message slots available.

# NISSAN VOICE RECOGNITION SYSTEM (if so equipped)

The NISSAN Voice Recognition system allows hands-free operation of the systems equipped on this vehicle, such as the phone and navigation systems.

To operate NISSAN Voice Recognition, press the button located on the steering wheel. When prompted, speak the command for the system you wish to activate. The command given is picked up by the microphone and performed when it is properly recognized. NISSAN Voice Recognition will provide a voice response as well as a message in the center display to inform you of the command results.

## USING THE SYSTEM

### Initialization

When the ignition switch is in the ON position, NISSAN Voice Recognition is initialized, which takes a few seconds. When completed, the system is ready to accept voice commands. If the button is pressed before the initialization completes, the system will announce: “Voice Recognition System not ready. Please wait.”

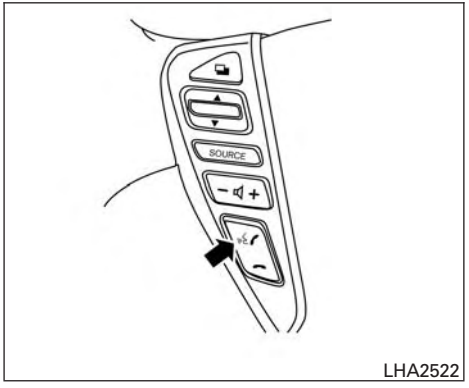

LHA2522

### Giving voice commands

1. Press the button.
2. The system announces: “Please say a category like phone or a command like points of interest followed by a brand name”. A list of available commands is then spoken by the system.
3. After the tone sounds and the face icon on the display changes, speak a command. Available commands are discussed in this section.
4. Voice and display feedback are provided when the command is accepted.

- If the command is not recognized, the system announces: “Command not recognized”. Repeat the command in a clear voice.
- If you want to cancel the command or go back to the previous menu of commands, press the button. The system will announce: “Cancelling voice recognition” or “Go back” depending on the current menu level.
- Press the BACK button on the control panel to move back through the menus displayed on the screen.
- If you want to adjust the volume of the voice feedback, use the volume control switches on the steering wheel or the volume knob on the control panel.
- The voice command screen can also be accessed using the control panel display:

1. Press the [ APPS ] button.
2. Touch the “Voice Commands” key.

## Operating tips

To get the best performance out of NISSAN Voice Recognition, observe the following:

- Keep the interior of the vehicle as quiet as possible. Close the windows to eliminate the surrounding noises (traffic noises, vibration sounds, etc.), which may prevent the system from recognizing the voice commands correctly.
- Wait until a tone sounds before speaking a command. Otherwise, the command will not be received properly.
- Start speaking a command within 3.5 seconds after the tone sounds.
- Speak in a natural voice without pausing between words.

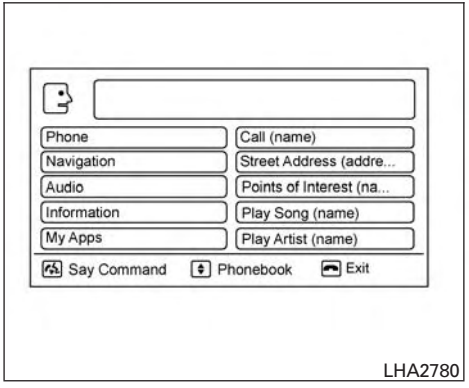

LHA2780

## SYSTEM FEATURES

NISSAN Voice Recognition can activate the following systems:

- Bluetooth™ Hands-Free Phone System
- Navigation
- Audio
- Information
- My Apps

For additional information on the navigation system, see the separate Navigation System Owner's Manual.

## How to say numbers

NISSAN Voice Recognition requires a certain way to speak numbers in voice commands. Refer to the following examples.

General rule: Either "zero" or "oh" can be used for "0".

### Phone numbers

Speak phone numbers according to the following example. For 1-800-662-6200, say dial number and then speak the phone number in any of the following formats:

- "one eight oh oh six six two six two oh oh"
- "one eight hundred six six two six two oh oh"
- "one eight zero zero six six two six two oh oh"

For the best voice recognition phone dialing results, say phone numbers as single digits. Also, full numbers can only be spoken for "800". For example, you cannot say 555-6000 as "five five five six thousand".

## BLUETOOTH® HANDS-FREE PHONE SYSTEM VOICE COMMANDS

To access the Bluetooth® Hands-Free Phone System voice commands:

1. Press the button.
2. Say “Call” and then a name in the vehicle phonebook to call that entry. Otherwise, say “Phone” to access various phone commands.

If the Bluetooth® has been set to “Off”, the system announces: “Bluetooth® is off. Would you like to turn Bluetooth® on?”

If no phone is connected to the system and the vehicle is stationary, the system announces: “There is no phone connected. Would you like to connect a phone now?” Say “Yes” to connect a phone. All further Bluetooth® Hands-Free Phone System voice commands are only available if a phone is connected.

If a phone is connected and Bluetooth® is set to “On”, the following voice commands are available:

- Call (a name)

  Speak the name of the contact in which you are trying to call. System will confirm correct contact. Say “Dial” to initiate dialing.

- Dial Number

  Allows for up to 24 digits to be dialed. After the number is entered, say “Dial” to initiate dialing. Say “Correction” to correct the number entered. Say “Go Back” to return to the main menu.

- List Phonebook

  Starting with the first alphabetical entry in the vehicle phonebook, the system prompts for an additional command. Say “Dial” to call the number of the phonebook entry. Say “Send Text” to send a text message to the number of the phonebook entry. Say “Next Entry” to skip to the next alphabetical entry in the vehicle phonebook, where the same options will then be available.

- Recent Calls

  The system prompts for an additional command. Say “Missed Calls”, “Incoming Calls” or “Outgoing Calls” to display a list of such calls on the screen.

  Speak the number of the entry displayed on the screen to dial that number or say “Next Page” to view entries on the next page (if available).

- Redial

  Redials the last called number.

- Read Text

  Reads an incoming text message. For more information about text messaging with the Bluetooth® Hands-Free Phone System, see “Bluetooth® Hands-Free Phone System with Navigation System” in this section.

- Send Text

  Sends a text message. For more information about text messaging with the Bluetooth® Hands-Free Phone System, see “Bluetooth® Hands-Free Phone System with Navigation System” in this section.

- Select Phone

  The system replies “Please use manual controls to continue”. Use manual controls to change the active phone from among the listed phones connected to the vehicle.

For more information about the Bluetooth® Hands-Free Phone System, see “Bluetooth® Hands-Free Phone System with Navigation System” in this section.

## NAVIGATION SYSTEM VOICE COMMANDS

The following voice commands are available for the Navigation System:

- Street Address (address)
- Points of Interest (name)
- POI by Category
- Home
- Address Book
- Previous Destinations
- Enter Address in Steps
- Cancel Route

For more information about these commands, see the separate Navigation System Owner's Manual.

## AUDIO SYSTEM VOICE COMMANDS

To access the audio system voice commands:

1. Press the button.
2. Say "Audio"
3. Speak a command from the following available commands:

- Play (AM, FM, etc.)

  Allows user to select radio band

- Tune AM (number)

  Allows user to tune directly to a desired AM frequency

- Tune FM (number)

  Allows user to tune directly to a desired FM frequency

- SXM channel (number)

  Allows user to tune directly to a desired SXM station (if so equipped)

- CD Track (number)

  Allows user to select track to be played

- Play Song (name)

  Allows user to select song name to be played

- Play Artist (name)

  Allows user to select artist to be played

- Play Album (name)

  Allows user to select album name to be played

For more information about the audio system, see "Audio system" in this section.

## INFORMATION VOICE COMMANDS

The following voice commands are available for the information functions of the Navigation System:

- Traffic
- Fuel Prices
- Stocks
- Movie Listings
- Current Weather
- Weather Map
- 5 — day Forecast
- 6 — hour Forecast

For more information about these commands, see the separate Navigation System Owner's Manual.

## MY APPS VOICE COMMANDS

Many Apps can be accessed using this voice command. See "NissanConnect™ App Smartphone Integration" in this section for more information.

## HELP VOICE COMMANDS

The following voice commands can be spoken to have the system provide instructions and tips for using the NISSAN Voice Recognition system.

- List Commands
- What Can I Say?
- General Help
- Quit
- Exit

## TROUBLESHOOTING GUIDE

The system should respond correctly to all voice commands without difficulty. If problems are encountered, follow the solutions given in this guide for the appropriate error. Where the solutions are listed by number, try each solution in turn, starting with number one, until the problem is resolved.

| Symptom/error message | Solution |
|---|---|
| The system responds “Command Not Recognized” or the system fails to recognize the command correctly. | 1. Ensure that the command format is valid. Use the “List Commands” or “What Can I Say?” command under the “Help” menu. |
| | 2. Speak clearly without pausing between words and at a level appropriate to the ambient noise level. |
| | 3. Ensure that the ambient noise level is not excessive (for example, with the windows open or the defroster on).<br>**NOTE:**<br>**If it is too noisy to use the phone, it is likely that voice commands will not be recognized.** |
| | 4. If optional words of the command have been omitted, then the command should be tried with these in place. |

# 5 Starting and driving


Precautions when starting and driving . . . . . 5-2
Exhaust gas (carbon monoxide) . . . . . 5-2
Three-way catalyst . . . . . 5-2
Tire Pressure Monitoring System (TPMS) . . . . . 5-3
Avoiding collision and rollover . . . . . 5-6
Off-road recovery . . . . . 5-6
Rapid air pressure loss . . . . . 5-7
Drinking alcohol/drugs and driving . . . . . 5-8
Ignition switch (if so equipped) . . . . . 5-8
Continuously Variable Transmission (CVT) (if so equipped) . . . . . 5-8
Manual transmission (if so equipped) . . . . . 5-9
Key positions . . . . . 5-9
NISSAN vehicle immobilizer system . . . . . 5-10
Push-Button Ignition Switch (if so equipped) . . . . . 5-10
Operating range . . . . . 5-11
Push-button ignition switch positions . . . . . 5-11
Emergency engine shut off . . . . . 5-12
NISSAN Intelligent Key® battery discharge . . . . . 5-12
NISSAN vehicle immobilizer system . . . . . 5-13
Before starting the engine . . . . . 5-13
Starting the engine . . . . . 5-14
Starting the engine (models with NISSAN Intelligent Key® system) . . . . . 5-15
Driving the vehicle . . . . . 5-16
Continuously Variable Transmission (CVT) (if so equipped) . . . . . 5-16
Manual transmission (if so equipped) . . . . . 5-19
Parking brake . . . . . 5-21
SPORT mode switch . . . . . 5-22
ECO mode switch . . . . . 5-22
Gear shift indicator (Manual transmission only) (if so equipped) . . . . . 5-23
Cruise control (if so equipped) . . . . . 5-24
Precautions on cruise control . . . . . 5-24
Cruise control operations . . . . . 5-24
Break-in schedule . . . . . 5-25
Fuel efficient driving tips . . . . . 5-26
Increasing fuel economy . . . . . 5-27
Parking/parking on hills . . . . . 5-28
Power steering . . . . . 5-29
Brake system . . . . . 5-30
Brake precautions . . . . . 5-30
Anti-lock Braking System (ABS) . . . . . 5-30

Vehicle Dynamic Control (VDC) system . . . . . 5-32
Cold weather driving . . . . . 5-33
Freeing a frozen door lock . . . . . 5-33
Anti-freeze . . . . . 5-33
Battery . . . . . 5-33
Draining of coolant water . . . . . 5-34
Tire equipment . . . . . 5-34
Special winter equipment . . . . . 5-34
Driving on snow or ice . . . . . 5-34
Engine block heater (if so equipped) . . . . . 5-35

**⚠WARNING**

- **Do not leave children or adults who would normally require the assistance of others alone in your vehicle. Pets should also not be left alone. They could accidentally injure themselves or others through inadvertent operation of the vehicle. Also, on hot, sunny days, temperatures in a closed vehicle could quickly become high enough to cause severe or possibly fatal injuries to people or animals.**
- **Closely supervise children when they are around cars to prevent them from playing and becoming locked in the trunk where they could be seriously injured. Keep the car locked, with the rear seatback and trunk lid securely latched when not in use, and prevent children's access to car keys.**

## EXHAUST GAS (carbon monoxide)

**⚠WARNING**

- **Do not breathe exhaust gases; they contain colorless and odorless carbon monoxide. Carbon monoxide is dangerous. It can cause unconsciousness or death.**
- **If you suspect that exhaust fumes are entering the vehicle, drive with all windows fully open, and have the vehicle inspected immediately.**
- **Do not run the engine in closed spaces such as a garage.**
- **Do not park the vehicle with the engine running for any extended length of time.**
- **Keep the rear vent windows, lift gates, doors and trunk lids (if so equipped) closed while driving, otherwise exhaust gases could be drawn into the passenger compartment. If you must drive with one of these open, follow these precautions:**
  1. **Open all the windows.**
  2. **Set the air recirculation button to off and the fan control dial to high to circulate the air.**
- **If electrical wiring or other cable connections must pass to a trailer through the seal on the trunk lid or the body, follow the manufacturer's recommendation to prevent carbon monoxide entry into the vehicle.**
- **The exhaust system and body should be inspected by a qualified mechanic whenever:**
  a. **The vehicle is raised for service.**
  b. **You suspect that exhaust fumes are entering into the passenger compartment.**
  c. **You notice a change in the sound of the exhaust system.**
  d. **You have had an accident involving damage to the exhaust system, underbody, or rear of the vehicle.**

## THREE-WAY CATALYST

The three-way catalyst is an emission control device installed in the exhaust system. Exhaust gases in the three-way catalyst are burned at high temperatures to help reduce pollutants.

**⚠WARNING**

- **The exhaust gas and the exhaust system are very hot. Keep people, animals or flammable materials away from the exhaust system components.**

- **Do not stop or park the vehicle over flammable materials such as dry grass, waste paper or rags. They may ignite and cause a fire.**

**⚠ CAUTION**

- **Do not use leaded gasoline. Deposits from leaded gasoline will seriously reduce the three-way catalyst's ability to help reduce exhaust pollutants.**
- **Keep your engine tuned up. Malfunctions in the ignition, fuel injection, or electrical systems can cause overrich fuel flow into the three-way catalyst, causing it to overheat. Do not keep driving if the engine misfires, or if noticeable loss of performance or other unusual operating conditions are detected. Have the vehicle inspected promptly by a NISSAN dealer.**
- **Avoid driving with an extremely low fuel level. Running out of fuel could cause the engine to misfire, damaging the three-way catalyst.**
- **Do not race the engine while warming it up.**
- **Do not push or tow your vehicle to start the engine.**

## TIRE PRESSURE MONITORING SYSTEM (TPMS)

Each tire, including the spare (if provided), should be checked monthly when cold and inflated to the inflation pressure recommended by the vehicle manufacturer on the vehicle placard or tire inflation pressure label. (If your vehicle has tires of a different size than the size indicated on the vehicle placard or tire inflation pressure label, you should determine the proper tire inflation pressure for those tires.)

As an added safety feature, your vehicle has been equipped with a Tire Pressure Monitoring System (TPMS) that illuminates a low tire pressure telltale when one or more of your tires is significantly under-inflated. Accordingly, when the low tire pressure telltale illuminates, you should stop and check your tires as soon as possible, and inflate all your tires to the proper pressure. Driving on a significantly under-inflated tire causes the tire to overheat and can lead to tire failure. Under-inflation also reduces fuel efficiency and tire tread life, and may affect the vehicle's handling and stopping ability.

Please note that the TPMS is not a substitute for proper tire maintenance, and it is the driver's responsibility to maintain correct tire pressure, even if under-inflation has not reached the level to trigger illumination of the TPMS low tire pressure telltale.

Your vehicle has also been equipped with a TPMS malfunction indicator to indicate when the system is not operating properly. The TPMS malfunction indicator is combined with the low tire pressure telltale. When the system detects a malfunction, the telltale will flash for approximately one minute and then remain continuously illuminated. This sequence will continue upon subsequent vehicle start-ups as long as the malfunction exists. When the malfunction indicator is illuminated, the system may not be able to detect or signal low tire pressure as intended. TPMS malfunctions may occur for a variety of reasons, including the installation of replacement or alternate tires or wheels on the vehicle that prevent the TPMS from functioning properly. Always check the TPMS malfunction telltale after replacing one or more tires or wheels on your vehicle to ensure that the replacement or alternate tires and wheels allow the TPMS to continue to function properly.

**Additional information:**

- **The TPMS does not monitor the tire pressure of the spare tire.**

- The TPMS will activate only when the vehicle is driven at speeds above 16 MPH (25 km/h). Also, this system may not detect a sudden drop in tire pressure (for example a flat tire while driving).
- The low tire pressure warning light does not automatically turn off when the tire pressure of all your tires are adjusted. After the tires are inflated to the recommended pressure, the vehicle must be driven at speeds above 16 MPH (25 km/h) to activate the TPMS and turn off the low tire pressure warning light. Use a tire pressure gauge to check the tire pressure.
- The CHECK TIRE PRESSURE warning message is displayed in the odometer when the low tire pressure warning light is illuminated and low tire pressure is detected. The CHECK TIRE PRESSURE warning message turns off when the low tire pressure warning light turns off. The low tire pressure warning light remains illuminated until the tires are inflated to the recommended COLD tire pressure. The CHECK TIRE PRESSURE warning message is displayed each time the ignition switch is placed in the ON position as long as the low tire pressure warning light remains illuminated. See "Check tire pressure warning message" in the "Instruments and controls" section.
- The CHECK TIRE PRESSURE warning is not displayed if the low tire pressure warning light illuminates to indicate a TPMS malfunction.
- Tire pressure rises and falls depending on the heat caused by the vehicle's operation and the outside temperature. Low outside temperature can lower the temperature of the air inside the tire which can cause a lower tire inflation pressure. This may cause the low tire pressure warning light to illuminate. If the warning light illuminates, check the tire pressure for all four tires.
- The Tire and Loading Information label (also referred to as the vehicle placard or tire inflation pressure label) is located in the driver's door opening.

For additional information, see "Low tire pressure warning light" in the "Instruments and controls" section and "Tire Pressure Monitoring System (TPMS)" in the "In case of emergency" section.

**⚠ WARNING**

- **Radio waves could adversely affect electric medical equipment. Those who use a pacemaker should contact the electric medical equipment manufacturer for the possible influences before use.**
- **If the low tire pressure warning light illuminates while driving, avoid sudden steering maneuvers or abrupt braking, reduce vehicle speed, pull off the road to a safe location and stop the vehicle as soon as possible. Driving with underinflated tires may permanently damage the tires and increase the likelihood of tire failure. Serious vehicle damage could occur and may lead to an accident and could result in serious personal injury. Check the tire pressure for all four tires. Adjust the tire pressure to the recommended COLD tire pressure shown on the Tire and Loading Information label to turn the low tire pressure warning light OFF. If you have a flat tire, replace it with a spare tire as soon as possible. (See "Flat tire" in the "In case of emergency" section for changing a flat tire.)**

- **When a spare tire is mounted or a wheel is replaced, the TPMS will not function and the low tire pressure warning light will flash for approximately 1 minute. The light will remain on after 1 minute. Contact your NISSAN dealer as soon as possible for tire replacement and/or system resetting.**
- **Replacing tires with those not originally specified by NISSAN could affect the proper operation of the TPMS.**
- **Do not inject any tire liquid or aerosol tire sealant into the tires, as this may cause a malfunction of the tire pressure sensors.**

**⚠ CAUTION**

**Do not place metalized film or any metal parts (antenna, etc.) on the windows. This may cause poor reception of the signals from the tire pressure sensors, and the TPMS will not function properly.**

Some devices and transmitters may temporarily interfere with the operation of the TPMS and cause the low tire pressure warning light to illuminate.

Some examples are:

– Facilities or electric devices using similar radio frequencies are near the vehicle.

– If a transmitter set to similar frequencies is being used in or near the vehicle.

– If a computer (or similar equipment) or a DC/AC converter is being used in or near the vehicle.

**FCC Notice:**

**For USA:**

**This device complies with Part 15 of the FCC Rules. Operation is subject to the following two conditions: (1) This device may not cause harmful interference, and (2) this device must accept any interference received, including interference that may cause undesired operation.**

**NOTE:**

**Changes or modification not expressly approved by the party responsible for compliance could void the user's authority to operate the equipment.**

**For Canada:**

**This device complies with RSS-210 of Industry Canada. Operation is subject to the following two conditions: (1) this device may not cause harmful interference, and (2) this device must accept any interference received, including interference that may cause undesired operation of the device.**

## TPMS with Easy Fill Tire Alert (if so equipped)

When adding air to an under-inflated tire, the TPMS with Easy Fill Tire Alert provides visual and audible signals outside the vehicle to help you inflate the tires to the recommended COLD tire pressure.

**Vehicle set-up:**

1. Park the vehicle in a safe and level place.
2. Apply the parking brake and place the shift lever into the P (Park) position (if so equipped).
3. Place the ignition switch to the ON position. Do not start the engine.

**Operation:**

1. Add air to the tire.
2. After a few seconds, the hazard indicators will start flashing.
3. When the designated pressure is reached, the horn beeps once and the hazard indicators stop flashing.
4. Perform the above steps for each tire.
   - If the tire is over-inflated more than approximately 4 psi (30 kPa), the horn beeps and the hazard indicators flash 3 times. To correct the pressure, push the core of the valve stem on the tire briefly to release pressure. When the pressure reaches the designated pressure, the horn beeps once.
   - If the hazard indicator does not flash within approximately 15 seconds after starting to inflate the tire, it indicates that the Easy Fill Tire Alert is not operating.
   - The TPMS will not activate the Easy Fill Tire Alert under the following conditions:
     - If there is interference from an external device or transmitter.
     - The air pressure from the inflation device is not sufficient to inflate the tire.
     - There is a malfunction in the TPMS system.
     - There is a malfunction in the horn or hazard indicators.
     - The identification code of the tires pressure sensor is not registered to the system.
     - The battery of the tire pressure sensor is low.
   - If the Easy Fill Tire Alert does not operate due to TPMS interference, move the vehicle about 3 ft (1 m) backward or forward and try again.

If the Easy Fill Tire Alert is not working, use a tire pressure gauge.

## AVOIDING COLLISION AND ROLLOVER

**⚠ WARNING**

**Failure to operate this vehicle in a safe and prudent manner may result in loss of control or an accident.**

Be alert and drive defensively at all times. Obey all traffic regulations. Avoid excessive speed, high speed cornering, or sudden steering maneuvers, because these driving practices could cause you to lose control of your vehicle. **As with any vehicle, loss of control could result in a collision with other vehicles or objects or cause the vehicle to roll over, particularly if the loss of control causes the vehicle to slide sideways.** Be attentive at all times, and avoid driving when tired. Never drive when under the influence of alcohol or drugs (including prescription or over-the-counter drugs which may cause drowsiness). Always wear your seat belt as outlined in the “Safety – Seats, seat belts and supplemental restraint system” section of this manual, and also instruct your passengers to do so.

Seat belts help reduce the risk of injury in collisions and rollovers. **In a rollover crash, an unbelted or improperly belted person is significantly more likely to be injured or killed than a person properly wearing a seat belt.**

## OFF-ROAD RECOVERY

If the right side or left side wheels unintentionally leave the road surface, maintain control of the vehicle by following the procedure below. Please note that this procedure is only a general guide. The vehicle must be driven as appropriate based on the conditions of the vehicle, road and traffic.

1. Remain calm and do not overreact.

2. Do not apply the brakes.
3. Maintain a firm grip on the steering wheel with both hands and try to hold a straight course.
4. When appropriate, slowly release the accelerator pedal to gradually slow the vehicle.
5. If there is nothing in the way, steer the vehicle to follow the road while vehicle speed is reduced. Do not attempt to drive the vehicle back onto the road surface until vehicle speed is reduced.
6. When it is safe to do so, gradually turn the steering wheel until both tires return to the road surface. When all tires are on the road surface, steer the vehicle to stay in the appropriate driving lane.

- If you decide that it is not safe to return the vehicle to the road surface based on vehicle, road or traffic conditions, gradually slow the vehicle to a stop in a safe place off the road.

## RAPID AIR PRESSURE LOSS

Rapid air pressure loss or a "blow-out" can occur if the tire is punctured or is damaged due to hitting a curb or pothole. Rapid air pressure loss can also be caused by driving on under-inflated tires.

Rapid air pressure loss can affect the handling and stability of the vehicle, especially at highway speeds.

Help prevent rapid air pressure loss by maintaining the correct air pressure and visually inspect the tires for wear and damage. See "Wheels and tires" in the "Maintenance and do-it-yourself" section of this manual. If a tire rapidly loses air pressure or "blows-out" while driving, maintain control of the vehicle by following the procedure below. Please note that this procedure is only a general guide. The vehicle must be driven as appropriate based on the conditions of the vehicle, road and traffic.

**⚠ WARNING**

**The following actions can increase the chance of losing control of the vehicle if there is a sudden loss of tire air pressure. Losing control of the vehicle may cause a collision and result in personal injury.**

- **The vehicle generally moves or pulls in the direction of the flat tire.**
- **Do not rapidly apply the brakes.**
- **Do not rapidly release the accelerator pedal.**
- **Do not rapidly turn the steering wheel.**

1. Remain calm and do not overreact.
2. Maintain a firm grip on the steering wheel with both hands and try to hold a straight course.
3. When appropriate, slowly release the accelerator pedal to gradually slow the vehicle.
4. Gradually steer the vehicle to a safe location off the road and away from traffic if possible.
5. Lightly apply the brake pedal to gradually stop the vehicle.
6. Turn on the hazard warning flashers and either contact a roadside emergency service to change the tire or see "Changing a flat tire" in the "In case of emergency" section of this manual.

## DRINKING ALCOHOL/DRUGS AND DRIVING

**⚠WARNING**

**Never drive under the influence of alcohol or drugs. Alcohol in the bloodstream reduces coordination, delays reaction time and impairs judgement. Driving after drinking alcohol increases the likelihood of being involved in an accident injuring yourself and others. Additionally, if you are injured in an accident, alcohol can increase the severity of the injury.**

NISSAN is committed to safe driving. However, you must choose not to drive under the influence of alcohol. Every year thousands of people are injured or killed in alcohol-related accidents. Although the local laws vary on what is considered to be legally intoxicated, the fact is that alcohol affects all people differently and most people underestimate the effects of alcohol.

Remember, drinking and driving don't mix! That is true for drugs, too (over-the-counter, prescription, and illegal drugs). Don't drive if your ability to operate your vehicle is impaired by alcohol, drugs, or some other physical condition.

**⚠WARNING**

- **Never remove or turn the key to the LOCK position while driving. The steering wheel will lock (for models with a steering lock mechanism). This may cause the driver to lose control of the vehicle and could result in serious vehicle damage or personal injury.**
- **Never place the ignition switch in the LOCK position while driving. The steering wheel will lock (for models with a steering lock mechanism). This may cause the driver to lose control of the vehicle and could result in serious vehicle damage or personal injury.**

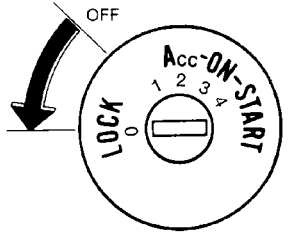

WSD0041

## CONTINUOUSLY VARIABLE TRANSMISSION (CVT) (if so equipped)

The ignition lock is designed so that the ignition switch cannot be turned to the LOCK position until the shift lever is moved to the P (Park) position.

- When moving the ignition switch to the LOCK position, make sure the shift lever is in the P (Park) position.
- When removing the key from the ignition switch, make sure the shift lever is in the P (Park) position.

When the ignition switch cannot be turned to the LOCK position:

1. Shift the shift lever to the P (Park) position.
2. Turn the ignition switch slightly in the ON direction.
3. Turn the ignition switch to the LOCK position.
4. Remove the key if it is inserted in the ignition switch.

If the ignition switch is turned to the LOCK position, the shift lever cannot be moved from the P (Park) position.

**The shift lever can be moved if the ignition switch is placed in the ON position and the foot brake pedal is depressed.**

**There is an OFF position between the LOCK and ACC positions. The OFF position is indicated by a "1" on the key cylinder.**

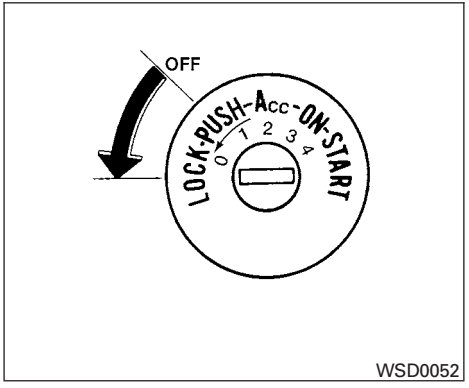


## MANUAL TRANSMISSION (if so equipped)

The ignition switch includes a device that helps prevent accidental removal of the key while driving.

The key can only be removed when the ignition switch is in the LOCK position.

On manual transmission models, to turn the ignition key to LOCK position from ACC or ON position, turn the key to OFF, push the key in, then turn the key to LOCK.

In order for the steering wheel to be locked, it must be turned about 1/8 of a turn clockwise from the straight up position.

**To lock the steering wheel, turn the key to the LOCK position. Remove the key. To unlock the steering wheel, insert the key and turn it gently while rotating the steering wheel slightly right and left.**

## KEY POSITIONS

LOCK: Normal parking position (0)

OFF: (Not used) (1)

ACC: (Accessories) (2)

This position activates electrical accessories such as the radio when the engine is not running.

ON: Normal operating position (3)

This position turns on the ignition system and the electrical accessories.

START: (4)

This position starts the engine. As soon as the engine has started, release the key. It automatically returns to the ON position.

## NISSAN VEHICLE IMMOBILIZER SYSTEM

The NISSAN Vehicle Immobilizer system will not allow the engine to start without the use of the registered key.

If the engine fails to start using a registered key (for example, when interference is caused by another registered key, an automated toll road device or automatic payment device on the key ring), restart the engine using the following procedure:

1. Leave the ignition switch in the ON position for approximately 5 seconds.
2. Place the ignition switch in the OFF or LOCK position, and wait approximately 10 seconds.
3. Repeat steps 1 and 2.
4. Restart the engine while holding the device (which may have caused the interference) separate from the registered key.

If the no start condition re-occurs, NISSAN recommends placing the registered key on a separate key ring to avoid interference from other devices.

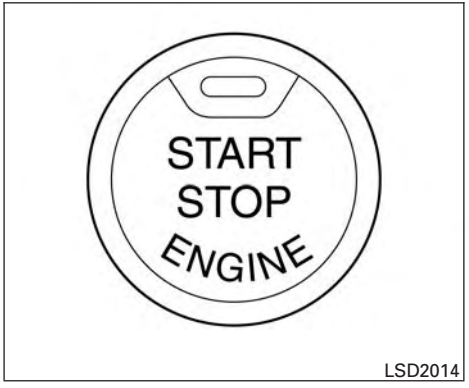

LSD2014

**⚠ WARNING**

**Do not operate the push-button ignition switch while driving the vehicle except in an emergency. (The engine will stop when the ignition switch is pushed 3 consecutive times in quick succession or the ignition switch is pushed and held for more than 2 seconds.) If the engine stops while the vehicle is being driven, this could lead to a crash and serious injury.**

When the ignition switch is pushed without depressing the brake pedal or the clutch pedal (MT), the ignition switch position will illuminate as follows:

Push center

- once to change to ACC.
- two times to change to ON.
- three times to return to OFF.

The ignition switch will automatically return to the LOCK position when any door is either opened or closed with the switch in the OFF position.

The ignition lock is designed so that the ignition switch position cannot be switched to OFF until the shift lever is moved to the P (Park) position or N (Neutral) position (MT).

When the ignition switch cannot be pushed toward the OFF position, proceed as follows:

1. Move the shift lever into the P (Park) position or N (Neutral) position (MT).
2. Push the ignition switch. The ignition switch position will change to the ON position.
3. Push the ignition switch again to the OFF position.

**The shift lever can be moved from the P (Park) position if the ignition switch is in the ON position and the brake pedal is depressed.**

**If the battery of the vehicle is discharged, the push-button ignition switch cannot be moved from the LOCK position.**

Some indicators and warnings for operation are displayed in the meter. See “Warning/indicator lights and audible reminders” in the “Instruments and controls” section.

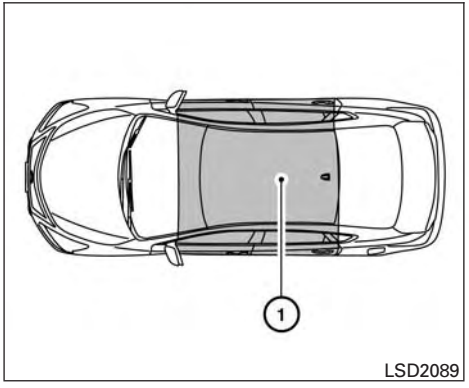


## OPERATING RANGE

The Intelligent Key functions can only be used when the Intelligent Key is within the specified operating range.

When the Intelligent Key battery is almost discharged or strong radio waves are present near the operating location, the Intelligent Key system’s operating range becomes narrower and may not function properly.

If the Intelligent Key is within the operating range, it is possible for anyone, even someone who does not carry the Intelligent Key, to push the ignition switch to start the engine.

The operating range of the engine start function is inside of the vehicle ①.

- The luggage area is not included in the operating range, but the Intelligent Key may function.
- If the Intelligent Key is placed on the instrument panel, inside the glove box, storage bin or door pocket, the Intelligent Key may not function.
- If the Intelligent Key is placed near the door or window outside the vehicle, the Intelligent Key may function.

## PUSH-BUTTON IGNITION SWITCH POSITIONS

**LOCK (Normal parking position):**

The ignition switch can only be locked in this position.

The ignition switch will be unlocked when it is pushed to the ACC position while carrying the Intelligent Key or with the Intelligent Key inserted in the port.

The ignition switch will lock when any door is opened or closed with the ignition switched off.

**OFF:**

The ignition switch is in the OFF position when the engine is turned off using the ignition switch. No lights will illuminate on the ignition switch.

**ACC (Accessories):**

This position activates electrical accessories, such as the radio, when the engine is not running.

ACC has a battery saver feature that will turn the ignition switch to the OFF position after 30 minutes under the following conditions:

- all doors are closed.
- shift lever is in P (Park).

The battery saver feature will be cancelled if any of the following occur:

- any door is opened.
- shift lever is moved out of P (Park).
- ignition switch changes position.

**ON (Normal operating position):**

This position turns on the ignition system and electrical accessories.

**⚠ CAUTION**

**Do not leave the vehicle with the ignition switch in ACC or ON positions when the engine is not running for an extended period. This can discharge the battery.**

## EMERGENCY ENGINE SHUT OFF

To shut off the engine in an emergency situation while driving, perform the following procedure:

– Rapidly push the push-button ignition switch 3 consecutive times in less than 1.5 seconds, or

– Push and hold the push-button ignition switch for more than 2 seconds.

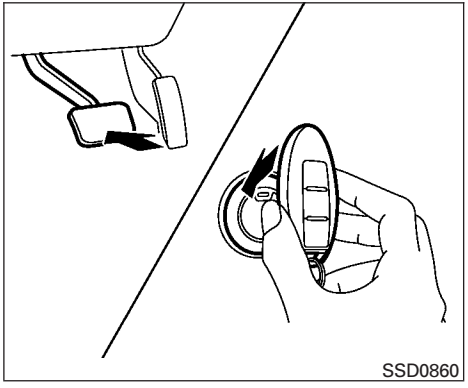


## NISSAN INTELLIGENT KEY® BATTERY DISCHARGE

If the battery of the NISSAN Intelligent Key® is discharged, or environmental conditions interfere with the Intelligent Key operation, start the engine according to the following procedure:

1. Place the shift lever in the P (Park) position.
2. Firmly apply the foot brake.

3. Touch the ignition switch with the Intelligent Key as illustrated. (A chime will sound.)

   After step 3 is performed, when the ignition switch is pushed without depressing the brake pedal, the ignition switch position will change to ACC.

4. Push the ignition switch while depressing the brake pedal within 10 seconds after the chime sounds. The engine will start.

**NOTE:**

- When the ignition switch is pushed to the ACC or ON position or the engine is started by the above procedure, the Intelligent Key battery discharge indicator appears in the vehicle information display even when the Intelligent Key is inside the vehicle. This is not a malfunction. To turn off the Intelligent Key battery discharge indicator, touch the ignition switch with the Intelligent Key again.
- If the Intelligent Key battery discharge indicator appears, replace the battery as soon as possible. See “Battery Replacement” in the “Maintenance and do-it-yourself” section.

## NISSAN VEHICLE IMMOBILIZER SYSTEM

The NISSAN Vehicle Immobilizer system will not allow the engine to start without the use of the registered key.

If the engine fails to start using a registered key (for example, when interference is caused by another registered key, an automated toll road device or automatic payment device on the key ring), restart the engine using the following procedure:

1. Leave the ignition switch in the ON position for approximately 5 seconds.
2. Place the ignition switch in the OFF or LOCK position, and wait approximately 10 seconds.
3. Repeat steps 1 and 2.
4. Restart the engine while holding the device (which may have caused the interference) separate from the registered key.

If the no start condition re-occurs, NISSAN recommends placing the registered key on a separate key ring to avoid interference from other devices.

- Make sure the area around the vehicle is clear.
- Check fluid levels such as engine oil, coolant, brake and clutch fluid(if so equipped), and windshield-washer fluid as frequently as possible, or at least whenever you refuel.
- Check that all windows and lights are clean.
- Visually inspect tires for their appearance and condition. Also check tires for proper inflation.
- Lock all doors.
- Position seat and adjust head restraints/headrests.
- Adjust inside and outside mirrors.
- Fasten seat belts and ask all passengers to do likewise.
- Check the operation of warning lights when the ignition switch is placed in the ON position. See “Warning/indicator lights and audible reminders” in the “Instruments and controls” section of this manual.

1. Apply the parking brake.
2. **CVT model:**

   Move the shift lever to P (Park) or N (Neutral). P (Park) is recommended.

   **The shift lever cannot be moved out of P (Park) and into any of the other gear positions if the ignition switch is turned to the OFF position or if the key is removed from the ignition switch.**

   **The starter is designed not to operate if the shift lever is in any of the driving positions.**

   **Manual transmission model:**

   Move the shift lever to N (Neutral). Depress the clutch pedal to the floor while cranking the engine.

   **The starter is designed not to operate unless the clutch pedal is fully depressed.**

   **The Intelligent Key must be carried when operating the ignition switch.**
3. Crank the engine **with your foot off the accelerator pedal** by turning the ignition switch to START. Release the switch when the engine starts. If the engine starts, but fails to run, repeat the above procedure.

- If the engine is very hard to start in extremely cold weather or when restarting, depress the accelerator pedal a little (approximately 1/3 to the floor) and hold it and then crank the engine. Release the switch and the accelerator pedal when the engine starts.
- If the engine is very hard to start because it is flooded, depress the accelerator pedal all the way to the floor and hold it. Crank the engine for 5-6 seconds. After cranking the engine, release the accelerator pedal. Crank the engine **with your foot off the accelerator pedal** by turning the ignition switch to START. Release the key when the engine starts. If the engine starts, but fails to run, repeat the above procedure.

**⚠ CAUTION**

**Do not operate the starter for more than 15 seconds at a time. If the engine does not start, turn the ignition switch to off and wait 10 seconds before cranking again, otherwise the starter could be damaged.**

4. **Warm-up**

   Allow the engine to idle for at least 30 seconds after starting. Do not race the engine while warming it up. Drive at moderate speed for a short distance first, especially in cold weather.

**NOTE:**

**Care should be taken to avoid situations that can lead to potential battery discharge and potential no-start conditions such as:**

1. Installation or extended use of electronic accessories that consume battery power when the engine is not running (Phone chargers, GPS, DVD players, etc.)
2. Vehicle is not driven regularly and/or only driven short distances. In these cases, the battery may need to be charged to maintain battery health.

## STARTING THE ENGINE (models with NISSAN Intelligent Key® system)

1. Apply the parking brake.
2. **Continuously Variable Transmission:**

   Move the shift lever to P (Park) or N (Neutral). P (Park) is recommended.

   **The starter is designed not to operate if the shift lever is in any of the driving positions.**

   **Manual Transmission:**

   Move the shift lever to N (Neutral). Depress the clutch pedal to the floor.

   **The starter is designed not to operate unless the clutch pedal is fully depressed.**
3. Push the ignition switch to the ON position. Depress the brake pedal and the clutch pedal (if so equipped) and push the ignition switch to start the engine.

   To start the engine immediately, push and release the ignition switch while depressing the brake pedal with the ignition switch in any position.

- If the engine is very hard to start in extremely cold weather or when restarting, depress the accelerator pedal a little (approximately 1/3 to the floor) and while holding, crank the engine. Release the accelerator pedal when the engine starts.
- If the engine is very hard to start because it is flooded, depress the accelerator pedal all the way to the floor and hold it. Push the ignition switch to the ON position to start cranking the engine. After 5 or 6 seconds, stop cranking by pushing the ignition switch to LOCK. After cranking the engine, release the accelerator pedal. Crank the engine with your foot off the accelerator pedal by depressing the brake pedal and pushing the push-button ignition switch to start the engine. If the engine starts, but fails to run, repeat the above procedure.

**⚠ CAUTION**

**Do not operate the starter for more than 15 seconds at a time. If the engine does not start, push the ignition switch to the OFF position and wait 10 seconds before cranking again, otherwise the starter could be damaged.**

4. **Warm-up**

   Allow the engine to idle for at least 30 seconds after starting. Do not race the engine while warming it up. Drive at moderate speed for a short distance first, especially in cold weather. In cold weather, keep the engine running for a minimum of 2 - 3 minutes before shutting it off. Starting and stopping the engine over a short period of time may make the vehicle more difficult to start.
5. To stop the engine, shift the shift lever to the P (Park) position or to N (Neutral) and apply the parking brake (M/T) and push the ignition switch to the OFF position.

**NOTE:**

**Care should be taken to avoid situations that can lead to potential battery discharge and potential no-start conditions such as:**

1. Installation or extended use of electronic accessories that consume battery power when the engine is not running (Phone chargers, GPS, DVD players, etc.).
2. Vehicle is not driven regularly and/or only driven short distances. In these cases, the battery may need to be charged to maintain battery health.

## CONTINUOUSLY VARIABLE TRANSMISSION (CVT) (if so equipped)

**⚠ WARNING**

- **Do not depress the accelerator pedal while shifting from P (Park) or N (Neutral) to R (Reverse), D (Drive) or L (Low). Always depress the brake pedal until shifting is completed. Failure to do so could cause you to lose control and have an accident.**
- **Cold engine idle speed is high, so use caution when shifting into a forward or reverse gear before the engine has warmed up.**
- **Do not downshift abruptly on slippery roads. This may cause a loss of control.**
- **Never shift to P (Park) or R (Reverse) while the vehicle is moving. This could cause an accident.**

**⚠ CAUTION**

- **Except in an emergency, do not shift to the N (Neutral) position while driving. Coasting with the transmission in the N (Neutral) position may cause serious damage to the transmission.**
- **When stopping the vehicle on an uphill grade, do not hold the vehicle by depressing the accelerator pedal. The foot brake should be used for this purpose.**

The CVT in your vehicle is electronically controlled to produce maximum power and smooth operation.

The recommended operating procedures for this transmission are shown on the following pages. Follow these procedures for maximum vehicle performance and driving enjoyment.

**NOTE:**

**Engine power may be automatically reduced to protect the CVT if the engine speed increases quickly when driving on slippery roads or while being tested on some dynamometers.**

### Starting the vehicle

1. After starting the engine, fully depress the foot brake pedal before moving the shift lever out of the P (Park) position.
2. Keep the foot brake pedal depressed and move the shift lever into a driving gear.
3. Release the foot brake, then gradually start the vehicle in motion.
4. Stop the vehicle completely before shifting the shift lever to the P (Park) position.

**The CVT is designed so the foot brake pedal MUST be depressed before shifting from P (Park) to any drive position while the ignition switch is in the ON position.**

**The shift lever cannot be moved out of P (Park) and into any of the other gear positions if the ignition switch is turned to the LOCK or OFF position or if the key is removed.**

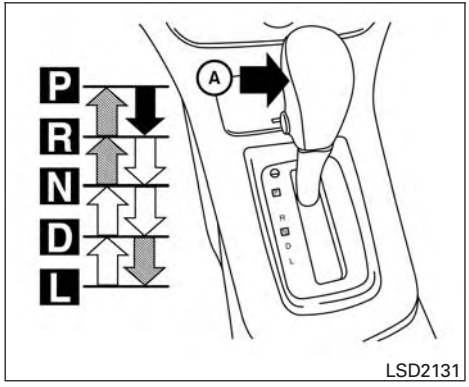


To move the shift lever:

- Push the button Ⓐ while depressing the brake pedal
- Push the button Ⓐ to shift
- Shift without pushing button Ⓐ

## Shifting

After starting the engine, fully depress the brake pedal and move the shift lever from P (Park) to any of the desired shift positions.

**⚠WARNING**

- **Apply the parking brake if the shift lever is in any position while the engine is not running. Failure to do so could cause the vehicle to move unexpectedly or roll away and result in serious personal injury or property damage.**

If the key is turned to the OFF or ACC position for any reason while the vehicle is in N (Neutral), or any drive position, the key cannot be turned to the LOCK position and be removed from the ignition switch. If this occurs, perform the following steps:

1. Apply the parking brake when the vehicle is stopped.
2. Move the shift lever to P (Park) to park the vehicle and turn the ignition switch to the LOCK position to remove the key.

**P (Park):**

**⚠CAUTION**

**To prevent transmission damage, use the P (Park) or R (Reverse) position only when the vehicle is completely stopped.**

Use the P (Park) shift lever position when the vehicle is parked or when starting the engine. Make sure the vehicle is completely stopped. **The brake pedal must be depressed and the shift lever button pushed in to move the shift lever from N (Neutral) or any drive position to P (Park).** Apply the parking brake. When parking on a hill, apply the parking brake first, then place the shift lever into the P (Park) position.

**R (Reverse):**

**⚠CAUTION**

**To prevent transmission damage, use the P (Park) or R (Reverse) position only when the vehicle is completely stopped.**

Use the R (Reverse) position to back up. Make sure the vehicle is completely stopped before selecting R (Reverse) position. **The brake pedal must be depressed and the shift lever button pushed in to move the shift lever from P (Park), N (Neutral) or any drive position to R (Reverse).**

**N (Neutral):**

Neither forward nor reverse gear is engaged. The engine can be started in this position. You may shift to N (Neutral) and restart a stalled engine while the vehicle is moving.

**D (Drive):**

Use this position for all normal forward driving.

**L (Low):**

Use this position for maximum engine braking on steep downhill gradients/climbing steep slopes and whenever approaching sharp bends. Do not use the L (Low) position in any other circumstances.

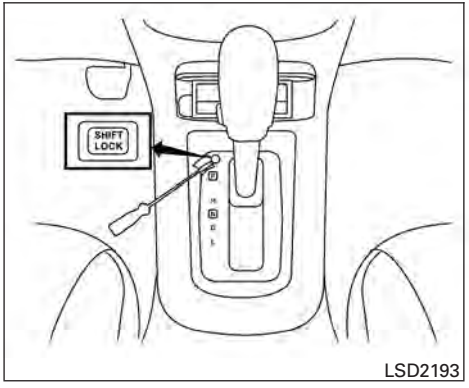

LSD2193

## Shift lock release

If the battery charge is low or discharged, the shift lever may not be moved from the P (Park) position even with the brake pedal depressed and the shift lever button pressed.

It will be necessary to jump start or have your battery charged, see “Jump starting” in the “In case of emergency” section. Contact your NISSAN dealer or a professional towing service.

To move the shift lever, complete the following procedure:

1. Press the ignition switch to the LOCK position.
2. Apply the parking brake.
3. Using a protective cloth on the tip of a 3 mm screwdriver, remove the shift lock release cover.
   - If available, a plastic trim tool can also be used.
4. Insert the small screwdriver in the shift lock release slot and push down.
5. Move the shift lever to the N (Neutral) position while holding down the shift lock release.
6. Push the ignition switch to the ON position to unlock the steering wheel. Now the vehicle may be moved to the desired location.

If the shift lever cannot be moved out of P (Park), have a NISSAN dealer check the transmission as soon as possible.

**⚠ WARNING**

**If the shift lever cannot be moved from the P (Park) position while the engine is running and the brake pedal is depressed, the stop lights may not work. Malfunctioning stop lights could cause an accident injuring yourself and others.**

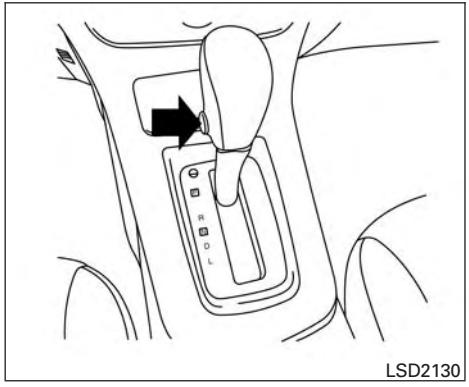


## Overdrive (O/D) OFF switch

When the O/D OFF switch is pushed with the shift lever in the D (Drive) position, the O/D OFF light in the instrument panel illuminates. See "Overdrive off indicator light (CVT models)" in the "Instruments and controls" section of this manual.

Use the Overdrive off mode when you need improved engine braking.

To turn off the Overdrive off mode, push the O/D OFF switch again. The O/D OFF indicator light will turn off.

Each time the engine is started, or when the shift lever is shifted to any position other than D (Drive), the Overdrive off mode will be automatically turned off.

## Accelerator downshift — in D position —

For passing or hill climbing, depress the accelerator pedal to the floor. This shifts the transmission down into a lower gear, depending on the vehicle speed.

## Fail-safe

When the fail-safe operation occurs, the CVT will not be shifted into the selected driving position.

**If the vehicle is driven under extreme conditions, such as excessive wheel spinning and subsequent hard braking, the fail-safe system may be activated. The MIL may come on to indicate the fail-safe mode is activated, see "Malfunction Indicator Light (MIL)" in the "Instruments and controls" section. This will occur even if all electrical circuits are functioning properly. In this case, place the ignition switch in the OFF position and wait for 10 seconds. Then place the ignition switch back in the ON position. The vehicle should return to its normal operating condition. If it does not return to its normal operating condition, have a NISSAN dealer check the transmission and repair if necessary.**

**⚠ WARNING**

**When the high fluid temperature protection mode or fail-safe operation occurs, vehicle speed may be gradually reduced. The reduced speed may be lower than other traffic, which could increase the chance of a collision. Be especially careful when driving. If necessary, pull to the side of the road at a safe place and allow the transmission to return to normal operation, or have it repaired if necessary.**

# MANUAL TRANSMISSION (if so equipped)

**⚠ WARNING**

- **Do not downshift abruptly on slippery roads. This may cause a loss of control.**
- **Do not over-rev the engine when shifting to a lower gear. This may cause a loss of control or engine damage.**
- **Do not shift to the N (Neutral) position while driving. Doing so may result in an accident due to loss of engine braking.**

**⚠ CAUTION**

- **Do not rest your foot on the clutch pedal while driving. This may cause clutch damage.**
- **Fully depress the clutch pedal before shifting to help prevent transmission damage.**
- **Stop your vehicle completely before shifting into R (Reverse).**
- **When the vehicle is stopped with the engine running (for example, at a stop light), shift to N (Neutral) and release the clutch pedal with the foot brake applied.**
- **Do not shift to the "N" (Neutral) position while driving. Doing so may result in an accident due to loss of engine braking.**

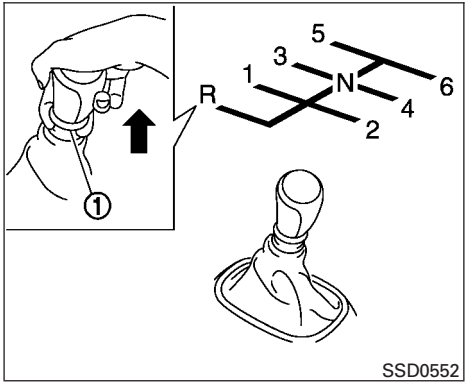


## Shifting

To change gears or when upshifting or downshifting, depress the clutch pedal fully, shift into the appropriate gear, then release the clutch slowly and smoothly.

To ensure smooth gear changes, fully depress the clutch pedal before operating the shift lever. If the clutch pedal is not fully depressed before the transmission is shifted, a gear noise may be heard. Transmission damage may occur.

Start the vehicle in 1st gear and shift to 2nd, 3rd, 4th and 5th up to 6th gear in sequence according to vehicle speed.

To back up, lift up on the shift lever ring ① and then move it to the R (Reverse) position after stopping the vehicle completely.

The shift lever ring ① returns to its original position when the shift lever is moved to the N (Neutral) position.

If it is difficult to move the shift lever into R (Reverse) or 1 (1st), shift into N (Neutral), then release the clutch pedal. Depress the clutch pedal again and shift into R (Reverse) or 1 (1st).

## Suggested up-shift speeds

The following are suggested vehicle speeds for shifting into a higher gear. These suggestions relate to fuel economy and vehicle performance. Actual upshift speeds will vary according to road conditions, the weather and individual driving habits.

| GEAR CHANGE | MPH (km/h) |
|---|---|
| 1st to 2nd | 8 (13) |
| 2nd to 3rd | 17 (27) |
| 3rd to 4th | 25 (40) |
| 4th to 5th | 36 (58) |
| 5th to 6th | 51 (82) |

## Suggested maximum speed in each gear

Downshift to a lower gear if the engine is not running smoothly, or if you need to accelerate.

Do not exceed the maximum suggested speed (shown below) in any gear. For level road driving, use the highest gear suggested for that speed. Always observe posted speed limits, and drive according to the road conditions, which will ensure safe operation. Do not over-rev the engine when shifting to a lower gear as it may cause engine damage or loss of vehicle control.

**MRA8DE engine models (6 M/T)**

| GEAR | km/h (MPH) |
|---|---|
| 1st | 48 (30) |
| 2nd | 84 (52) |
| 3rd | 117 (73) |
| 4th | 152 (94) |
| 5th | — |
| 6th | — |

**⚠ WARNING**

- **Be sure the parking brake is fully released before driving. Failure to do so can cause brake failure and lead to an accident.**
- **Do not release the parking brake from outside the vehicle.**
- **Do not use the shift lever in place of the parking brake. When parking, be sure the parking brake is fully engaged.**
- **Do not leave children unattended in a vehicle. They could release the parking brake and cause an accident.**

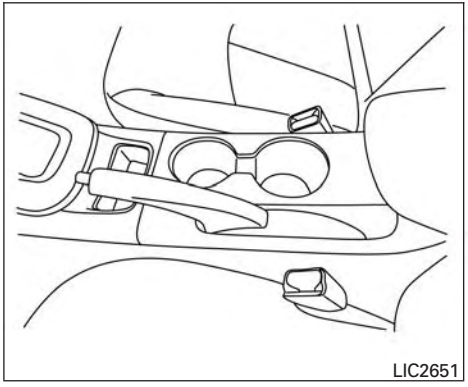


**To engage:** Pull the lever up Ⓐ.

**To release:**

1. Firmly apply the foot brake.
2. **Manual transmission models:**

   Place the shift lever in the N (Neutral) position.

   **CVT models:**

   Move the shift lever to the P (Park) position.
3. While pulling up on the parking brake lever slightly, push the button and lower completely Ⓑ.
4. Before driving, be sure the brake warning light goes out.

## SPORT MODE SWITCH

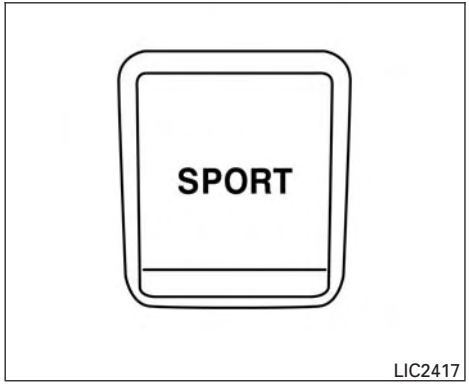


Adjusts the throttle sensitivity and transmission points (CVT only) to enhance performance. Press the SPORT button on the instrument panel to activate. The SPORT mode indicator light (on the speedometer) will illuminate. The SPORT mode indicator light will remain lit while the mode is active.

**NOTE:**

**In the SPORT mode, fuel economy may be reduced.**

## ECO MODE SWITCH

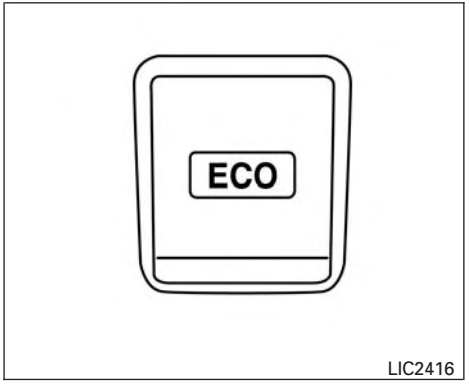


**ECO mode switch**

The ECO mode helps to enhance the fuel economy by controlling the throttle sensitivity and transmission points (CVT if so equipped).

To turn on the ECO mode, push the ECO mode switch. The ECO mode indicator light (on the speedometer) will remain lit while the mode is active.

To turn off the ECO mode, push the ECO mode switch again. The ECO mode indicator light (on the speedometer) will turn off.

The ECO mode cannot be turned off while the accelerator pedal is depressed, even if the ECO mode switch is pushed to OFF. Release the accelerator pedal to turn off the ECO mode.

The ECO mode will turn off automatically if a malfunction occurs in the system.

Turn off the ECO mode, or depress the accelerator pedal fully when:

- driving with a heavy load of passengers or cargo in the vehicle
- driving on a steep uphill slope
- ECO mode may affect air conditioner performance

**NOTE:**

**Selecting this drive mode will not necessarily improve fuel economy as many driving factors influence its effectiveness.**

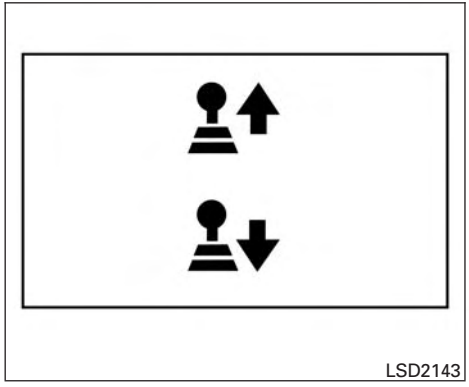


## GEAR SHIFT INDICATOR (Manual transmission only) (if so equipped)

The Gear Shift Indicator (GSI) is used to support the suitable timing of gear change. It operates only when the ECO mode is in the “ON” state.

The shift indicator icon ② and recommended gear position ③ are displayed.

The shift indicator icon indicates when to upshift or downshift for fuel economy.

**NOTE:**

- The shift indicator is a guide for fuel economy. Always pay attention to road conditions and other traffic.
- Downshift indicator icon to the “1” (1st) position is not displayed.
- If the downshifting icon is displayed when decreasing your vehicle speed, it indicates that the engine speed is low compared to the gear position.

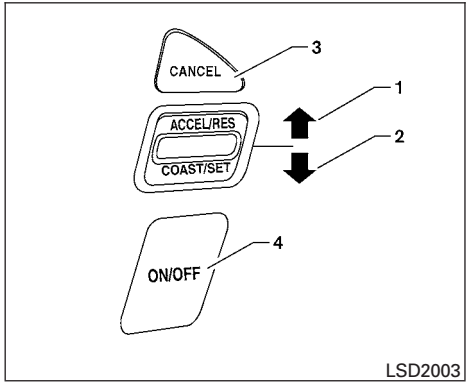


1. ACCEL/RES switch
2. COAST/SET switch
3. CANCEL switch
4. ON·OFF switch

## PRECAUTIONS ON CRUISE CONTROL

- If the cruise control system malfunctions, it cancels automatically. The CRUISE indicator light in the instrument panel then blinks to warn the driver, see "Warnings/Indicator Lights and Audible Reminders" in the "Instruments and controls" section.
- If the CRUISE indicator light blinks, push the cruise control ON·OFF switch off and have the system checked by a NISSAN dealer.
- The CRUISE indicator light may blink when the cruise control ON·OFF switch is pushed ON while pushing the ACCEL/RES, COAST/SET, or CANCEL switch. To properly set the cruise control system, use the following procedures.

**⚠ WARNING**

**Do not use the cruise control when driving under the following conditions:**

- **When it is not possible to keep the vehicle at a set speed.**
- **In heavy traffic or in traffic that varies in speed.**
- **On winding or hilly roads.**
- **On slippery roads (rain, snow, ice, etc.).**
- **In very windy areas.**

**Doing so could cause a loss of vehicle control and result in an accident.**

## CRUISE CONTROL OPERATIONS

The cruise control allows driving at a speed between 25 - 89 MPH (40 - 144 km/h) without keeping your foot on the accelerator pedal.

**To turn on the cruise control,** push the ON·OFF switch. The CRUISE indicator light in the instrument panel comes on.

**To set cruising speed,** accelerate the vehicle to the desired speed, push the COAST/SET switch and release it. Take your foot off the accelerator pedal. Your vehicle maintains the set speed.

- **To pass another vehicle,** depress the accelerator pedal. When you release the pedal, the vehicle returns to the previously set speed.
- The vehicle may not maintain the set speed when going up or down steep hills. If this happens, drive without the cruise control.

**To cancel the preset speed,** use one of the following three methods.

- Push the CANCEL button, or
- Tap the brake pedal, or
- Push the ON·OFF switch off. The CRUISE indicator light in the instrument panel go out.

The cruise control is automatically canceled if:

- you depress the brake or clutch pedal while pushing the ACCEL/RES or SET/COAST switch. The preset speed is deleted from memory.
- the vehicle slows down more than 8 MPH (13 km/h) below the set speed.
- you depress the clutch pedal (manual transmission), or move the shift lever to N (Neutral) (CVT).

**To reset at a faster cruising speed,** use one of the following three methods.

- Depress the accelerator pedal. When the vehicle attains the desired speed, push and release the COAST/SET switch.
- Push and hold the ACCEL/RES switch. When the vehicle attains the speed you desire, release the switch.
- Push and release the ACCEL/RES switch. Each time you do this, the set speed increases by about 1 MPH (1.6 km/h).

**To reset at a slower cruising speed,** use one of the following three methods.

- Lightly tap the brake pedal. When the vehicle attains the desired speed, push the COAST/SET switch and release it.
- Push and hold the COAST/SET switch. Release the switch when the vehicle slows to the desired speed.
- Push and release the COAST/SET switch. Each time you do this, the set speed decreases by about 1 MPH (1.6 km/h).

**To resume the preset speed,** push and release the ACCEL/RES switch. The vehicle returns to the last set cruising speed when the vehicle speed is over 25 MPH (40 km/h).

**⚠ CAUTION**

**During the first 1,200 miles (2,000 km), follow these recommendations to obtain maximum engine performance and ensure the future reliability and economy of your new vehicle. Failure to follow these recommendations may result in shortened engine life and reduced engine performance.**

- Avoid driving for long periods at constant speed, either fast or slow, and do not run the engine over 4,000 RPM.
- Do not accelerate at full throttle in any gear.
- Avoid quick starts.
- Avoid hard braking as much as possible.
- Do not tow a trailer for the first 500 mi (800 km). Your engine, axle or other parts could be damaged.

## FUEL EFFICIENT DRIVING TIPS

Follow these easy-to-use Fuel Efficient Driving Tips to help you achieve the most fuel economy from your vehicle.

1. **Use Smooth Accelerator and Brake Pedal Application**
   - Avoid rapid starts and stops
   - Use smooth, gentle accelerator and brake application whenever possible
   - Maintain constant speed while commuting and coast whenever possible
2. **Maintain Constant Speed**
   - Look ahead to try and anticipate and minimize stops
   - Synchronizing your speed with traffic lights allows you to reduce your number of stops
   - Maintaining a steady speed can minimize red light stops and improve fuel efficiency
3. **Use Air Conditioning (A/C) at Higher Vehicle Speeds**
   - Below 40 MPH (64 km/h), it is more efficient to open windows to cool the vehicle due to reduced engine load
   - Above 40 MPH (64 km/h), it is more efficient to use A/C to cool the vehicle due to increased aerodynamic drag
   - Recirculating the cool air in the cabin when the A/C is on reduces cooling load
4. **Drive at Economical Speeds and Distances**
   - Observing the speed limit and not exceeding 60 MPH (97 km/h) (where legally allowed) can improve fuel efficiency due to reduced aerodynamic drag
   - Maintaining a safe following distance behind other vehicles reduces unnecessary braking
   - Safely monitoring traffic to anticipate changes in speed permits reduced braking and smooth acceleration changes
   - Select a gear range suitable to road conditions
5. **Use Cruise Control**
   - Using cruise control during highway driving helps maintain a steady speed
   - Cruise control is particularly effective in providing fuel savings when driving on flat terrains
6. **Plan for the Shortest Route**
   - Utilize a map or navigation system to determine the best route to save time
7. **Avoid Idling**
   - Shutting off your engine when safe for stops exceeding 30–60 seconds saves fuel and reduces emissions
8. **Buy an Automated Pass for Toll Roads**
   - Automated passes permit drivers to use special lanes to maintain cruising speed through the toll and avoid stopping and starting
9. **Winter Warm Up**
   - Limit idling time to minimize impact to fuel economy
   - Vehicles typically need no more than 30 seconds of idling at start-up to effectively circulate the engine oil before driving
   - Your vehicle will reach its ideal operating temperature more quickly while driving versus idling

10. **Keeping your Vehicle Cool**
    - Park your vehicle in a covered parking area or in the shade whenever possible
    - When entering a hot vehicle, opening the windows will help to reduce the inside temperature faster, resulting in reduced demand on your A/C system
11. **ECO Mode**
    - The ECO mode helps to enhance the fuel economy by controlling the engine and CVT (if so equipped) operation automatically to avoid rapid acceleration.
    - Keep your engine tuned up.
    - Follow the recommended scheduled maintenance.
    - Keep the tires inflated to the correct pressure. Low tire pressure increases tire wear and lowers fuel economy.
    - Keep the wheels in correct alignment. Improper alignment increases tire wear and lowers fuel economy.
    - Use the recommended viscosity engine oil. See “Engine oil and oil filter recommendations” in “Technical and consumer information” in this manual.

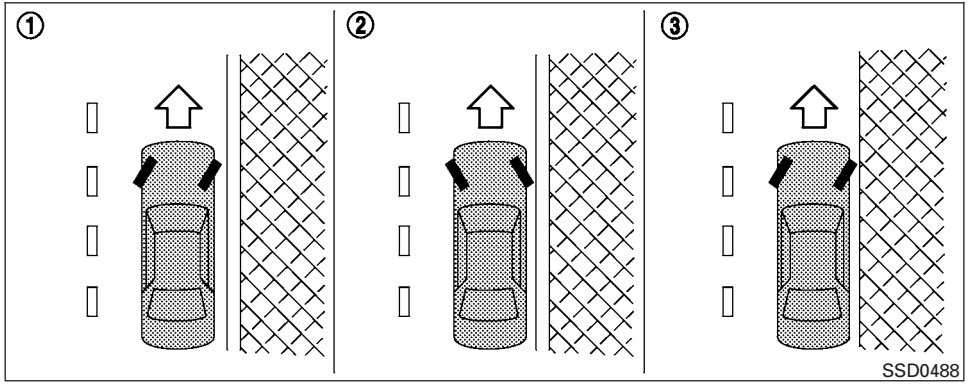


**⚠WARNING**

- **Do not stop or park the vehicle over flammable materials such as dry grass, waste paper or rags. They may ignite and cause a fire.**

- **Safe parking procedures require that both the parking brake be set and the transmission placed into P (Park) for CVT models or in an appropriate gear for manual transmission models. Failure to do so could cause the vehicle to move unexpectedly or roll away and result in an accident. Make sure the shift lever has been pushed as far forward as it can go and cannot be moved without depressing the foot brake pedal.**
- **Never leave the engine running while the vehicle is unattended.**
- **Do not leave children unattended inside the vehicle. They could unknowingly activate switches or controls. Unattended children could become involved in serious accidents.**

1. Firmly apply the parking brake.
2. **Manual transmission models:**

   Place the shift lever in the R (Reverse) position. When parking on an uphill grade, place the shift lever in 1st gear.

   **Continuously Variable Transmission (CVT) models:**

   Move the shift lever into the P (Park) position.
3. To help prevent the vehicle from rolling into traffic when parked on an incline, it is a good practice to turn the wheels as illustrated.

- HEADED DOWNHILL WITH CURB: ①

  Turn the wheels into the curb and move the vehicle forward until the curb side wheel gently touches the curb.

- HEADED UPHILL WITH CURB: ②

  Turn the wheels away from the curb and move the vehicle back until the curb side wheel gently touches the curb.

- HEADED UPHILL OR DOWNHILL, NO CURB: ③

  Turn the wheels toward the side of the road so the vehicle will move away from the center of the road if it moves.

4. Place the ignition switch in the LOCK position and remove the key.

**⚠ WARNING**

- **If the engine is not running or is turned off while driving, the power assist for the steering will not work. Steering will be harder to operate.**
- **When the power steering warning light illuminates with the engine running, there will be no power assist for the steering. You will still have control of the vehicle but the steering will be harder to operate. Have the power steering system checked by a NISSAN dealer.**

The power steering system is designed to provide power assist while driving to operate the steering wheel with light force.

When the steering wheel is operated repeatedly or continuously while parking or driving at a very low speed, the power assist for the steering wheel will be reduced. This is to prevent overheating of the power steering system and protect it from getting damaged. While the power assist is reduced, steering wheel operation will become heavy. When the temperature of the power steering system goes down, the power assist level will return to normal. Avoid repeating such steering wheel operations that could cause the power steering system to overheat.

You may hear a sound when the steering wheel is operated quickly. However, this is not a malfunction.

If the electric power steering warning light **PS** illuminates while the engine is running, it may indicate the power steering system is not functioning properly and may need servicing. Have the power steering system checked by a NISSAN dealer.

When the electric power steering warning light illuminates with the engine running, there will be no power assist for the steering but you will still have control of the vehicle. At this time, greater steering effort is required to operate the steering wheel, especially in sharp turns and at low speeds.

For additional information see “Power steering warning light” in the “Instruments and controls” section.

The brake system has two separate hydraulic circuits. If one circuit malfunctions, you will still have braking at 2 wheels.

## BRAKE PRECAUTIONS

### Vacuum assisted brakes

The brake booster aids braking by using engine vacuum. If the engine stops, you can stop the vehicle by depressing the brake pedal. However, greater foot pressure on the brake pedal will be required to stop the vehicle and stopping distance will be longer.

### Using the brakes

Avoid resting your foot on the brake pedal while driving. This will overheat the brakes, wear out the brake pads faster, and reduce gas mileage.

To help reduce brake wear and to prevent the brakes from overheating, reduce speed and downshift to a lower gear before going down a slope or long grade. Overheated brakes may reduce braking performance and could result in loss of vehicle control.

**⚠ WARNING**

- **While driving on a slippery surface, be careful when braking, accelerating or downshifting. Abrupt braking or accelerating could cause the wheels to skid and result in an accident.**
- **If the engine is not running or is turned off while driving, the power assist for the brakes will not work. Braking will be harder.**

### Wet brakes

When the vehicle is washed or driven through water, the brakes may get wet. As a result, your braking distance will be longer and the vehicle may pull to one side during braking.

To dry the brakes, drive the vehicle at a safe speed while lightly pressing the brake pedal to heat up the brakes. Do this until the brakes return to normal. Avoid driving the vehicle at high speeds until the brakes function correctly.

### Parking brake break-in

Break-in the parking brake shoes whenever the effect of the parking brake is weakened or whenever the parking brake shoes and/or drum/rotors are replaced, in order to assure the best brake performance.

This procedure is described in the vehicle service manual and can be performed by a NISSAN dealer.

## ANTI-LOCK BRAKING SYSTEM (ABS)

**⚠ WARNING**

- **The Anti-lock Braking System (ABS) is a sophisticated device, but it cannot prevent accidents resulting from careless or dangerous driving techniques. It can help maintain vehicle control during braking on slippery surfaces. Remember that stopping distances on slippery surfaces will be longer than on normal surfaces even with ABS. Stopping distances may also be longer on rough, gravel or snow covered roads, or if you are using tire chains. Always maintain a safe distance from the vehicle in front of you. Ultimately, the driver is responsible for safety.**
- **Tire type and condition may also affect braking effectiveness.**
  - **When replacing tires, install the specified size of tires on all four wheels.**

- **When installing a spare tire, make sure that it is the proper size and type as specified on the Tire and Loading Information label. See "Technical and consumer information" section of this manual.**
- **For detailed information, see "Wheels and tires" in the "Maintenance and do-it-yourself" section of this manual.**

The Anti-lock Braking System (ABS) controls the brakes so the wheels do not lock during hard braking or when braking on slippery surfaces. The system detects the rotation speed at each wheel and varies the brake fluid pressure to prevent each wheel from locking and sliding. By preventing each wheel from locking, the system helps the driver maintain steering control and helps to minimize swerving and spinning on slippery surfaces.

## Using the system

Depress the brake pedal and hold it down. Depress the brake pedal with firm steady pressure, but do not pump the brakes. The ABS will operate to prevent the wheels from locking up. Steer the vehicle to avoid obstacles.

**⚠ WARNING**

**Do not pump the brake pedal. Doing so may result in increased stopping distances.**

## Self-test feature

The ABS includes electronic sensors, electric pumps, hydraulic solenoids and a computer. The computer has a built-in diagnostic feature that tests the system each time you start the engine and move the vehicle at a low speed in forward or reverse. When the self-test occurs, you may hear a "clunk" noise and/or feel a pulsation in the brake pedal. This is normal and does not indicate a malfunction. If the computer senses a malfunction, it switches the ABS off and illuminates the ABS warning light on the instrument panel. The brake system then operates normally, but without anti-lock assistance.

If the ABS warning light illuminates during the self-test or while driving, have the vehicle checked by a NISSAN dealer.

## Normal operation

The ABS operates at speeds above 3 - 6 MPH (5 - 10 km/h). The speed varies according to road conditions.

When the ABS senses that 1 or more wheels are close to locking up, the actuator rapidly applies and releases hydraulic pressure. This action is similar to pumping the brakes very quickly. You may feel a pulsation in the brake pedal and hear a noise from under the hood or feel a vibration from the actuator when it is operating. This is normal and indicates that the ABS is operating properly. However, the pulsation may indicate that road conditions are hazardous and extra care is required while driving.

# VEHICLE DYNAMIC CONTROL (VDC) SYSTEM

The Vehicle Dynamic Control (VDC) system uses various sensors to monitor driver inputs and vehicle motion. Under certain driving conditions, the VDC System helps to perform the following functions:

- Controls brake pressure to reduce wheel slip on one slipping drive wheel so power is transferred to a non slipping drive wheel on the same axle.
- Controls brake pressure and engine output to reduce drive wheel slip based on vehicle speed (traction control function).
- Controls brake pressure at individual wheels and engine output to help the driver maintain control of the vehicle in the following conditions:
  - understeer (vehicle tends to not follow the steered path despite increased steering input)
  - oversteer (vehicle tends to spin due to certain road or driving conditions)

The VDC system can help the driver to maintain control of the vehicle, but it cannot prevent loss of vehicle control in all driving situations.

When the VDC system operates, the indicator in the instrument panel flashes to note the following:

- The road may be slippery or the system may determine some action is required to help keep the vehicle on the steered path.
- You may feel a pulsation in the brake pedal and hear a noise or vibration from under the hood. This is normal and indicates that the VDC system is working properly.
- Adjust your speed and driving to the road conditions.

See “Slip indicator light” and ”Vehicle Dynamic Control (VDC) off indicator light” in the ”Instruments and controls” section.

If a malfunction occurs in the system, the indicator light comes on in the instrument panel. The VDC system automatically turns off when the indicator light is off.

The VDC OFF switch is used to turn off the VDC system. The indicator illuminates to indicate the VDC system is off.

When the VDC switch is used to turn off the system, the VDC system still operates to prevent one drive wheel from slipping by transferring power to a non slipping drive wheel. The indicator flashes if this occurs. All other VDC functions are off and the indicator will not flash.

The VDC system is automatically reset to on when the ignition switch is placed in the off position then back to the on position.

The computer has a built in diagnostic feature that tests the system each time you start the engine and move the vehicle forward or in reverse at a slow speed. When the self-test occurs, you may hear a clunk noise and/or feel a pulsation in the brake pedal. This is normal and is not an indication of a malfunction.

**WARNING**

- **The VDC system is designed to help the driver maintain stability but does not prevent accidents due to abrupt steering operation at high speeds or by careless or dangerous driving techniques. Reduce vehicle speed and be especially careful when driving and cornering on slippery surfaces and always drive carefully.**

- **Do not modify the vehicle's suspension. If suspension parts such as shock absorbers, struts, springs, stabilizer bars, bushings and wheels are not NISSAN recommended for your vehicle or are extremely deteriorated, the VDC system may not operate properly. This could adversely affect vehicle handling performance, and the indicator may flash or the indicator light may illuminate.**
- **If brake related parts such as brake pads, rotors and calipers are not NISSAN recommended or are extremely deteriorated, the VDC system may not operate properly and the indicator light may illuminate.**
- **If engine control related parts are not NISSAN recommended or are extremely deteriorated, the indicator light may illuminate.**
- **When driving on extremely inclined surfaces such as higher banked corners, the VDC system may not operate properly and the indicator may flash or the indicator light may illuminate. Do not drive on these types of roads.**
- **When driving on an unstable surface such as a turntable, ferry, elevator or ramp, the indicator may flash or the indicator light may illuminate. This is not a malfunction. Restart the engine after driving onto a stable surface.**
- **If wheels or tires other than the NISSAN recommended ones are used, the VDC system may not operate properly and the indicator may flash or the indicator light may illuminate.**
- **The VDC system is not a substitute for winter tires or tire chains on a snow covered road.**

## FREEING A FROZEN DOOR LOCK

To prevent a door lock from freezing, apply deicer through the key hole. If the lock becomes frozen, heat the key before inserting it into the key hole, or use the remote keyless entry keyfob or the NISSAN Intelligent Key®.

## ANTI-FREEZE

In the winter when it is anticipated that the temperature will drop below 32°F (0°C), check the anti-freeze to assure proper winter protection. For details, see "Engine cooling system" in the "Maintenance and do-it-yourself" section of this manual.

## BATTERY

If the battery is not fully charged during extremely cold weather conditions, the battery fluid may freeze and damage the battery. To maintain maximum efficiency, the battery should be checked regularly. For details, see "Battery" in the "Maintenance and do-it-yourself" section of this manual.

## DRAINING OF COOLANT WATER

If the vehicle is to be left outside without anti-freeze, drain the cooling system, including the engine block. Refill before operating the vehicle. For details, see “Changing engine coolant” in the “Maintenance and do-it-yourself” section of this manual.

## TIRE EQUIPMENT

1. SUMMER tires have a tread designed to provide superior performance on dry pavement. However, the performance of these tires will be substantially reduced in snowy and icy conditions. If you operate your vehicle on snowy or icy roads, NISSAN recommends the use of MUD & SNOW or ALL SEASON TIRES on all four wheels. Please consult a NISSAN dealer for the tire type, size, speed rating and availability information.
2. For additional traction on icy roads, studded tires may be used. However, some U.S. states and Canadian provinces prohibit their use. Check local, state and provincial laws before installing studded tires.

**Skid and traction capabilities of studded snow tires on wet or dry surfaces may be poorer than that of non-studded snow tires.**

3. Tire chains may be used. For details see “Tire chains” in the “Maintenance and do-it-yourself” section of this manual.

## SPECIAL WINTER EQUIPMENT

It is recommended that the following items be carried in the vehicle during winter:

- A scraper and stiff-bristled brush to remove ice and snow from the windows and wiper blades.
- A sturdy, flat board to be placed under the jack to give it firm support.
- A shovel to dig the vehicle out of snowdrifts.
- Extra washer fluid to refill the windshield-washer fluid reservoir.

## DRIVING ON SNOW OR ICE

**⚠ WARNING**

- **Wet ice (32°F, 0°C and freezing rain), very cold snow or ice can be slick and very hard to drive on. The vehicle will have much less traction or “grip” under these conditions. Try to avoid driving on wet ice until the road is salted or sanded.**
- **Whatever the condition, drive with caution. Accelerate and slow down with care. If accelerating or downshifting too fast, the drive wheels will lose even more traction.**
- **Allow more stopping distance under these conditions. Braking should be started sooner than on dry pavement.**
- **Allow greater following distances on slippery roads.**
- **Watch for slippery spots (glare ice). These may appear on an otherwise clear road in shaded areas. If a patch of ice is seen ahead, brake before reaching it. Try not to brake while on the ice, and avoid any sudden steering maneuvers.**
- **Do not use the cruise control (if so equipped) on slippery roads.**
- **Snow can trap dangerous exhaust gases under your vehicle. Keep snow clear of the exhaust pipe and from around your vehicle.**

## ENGINE BLOCK HEATER (if so equipped)

Engine block heaters are used to assist with cold temperature starting.

The engine block heater should be used when the outside temperature is 20°F (-7°C) or lower.

**⚠ WARNING**

- **Do not use your engine block heater with an ungrounded electrical system or a 2-pronged adapter. You can be seriously injured by an electrical shock if you use an ungrounded connection.**
- **Disconnect and properly store the engine block heater cord before starting the engine. Damage to the cord could result in an electrical shock and can cause serious injury.**
- **Use a heavy-duty 3-wire, 3-pronged extension cord rated for at least 10 A. Plug the extension cord into a Ground Fault Interrupt (GFI) protected, grounded 110-VAC outlet. Failure to use the proper extension cord or a grounded outlet can result in a fire or electrical shock and cause serious personal injury.**

To use the engine block heater:

1. Turn the engine off.
2. Open the hood and unwrap the engine block heater cord.
3. Plug the engine block heater cord into a grounded 3 wire, 3 pronged extension cord.
4. Plug the extension cord into a Ground Fault Interrupt (GFI) protected, grounded 110-volt AC (VAC) outlet.
5. The engine block heater must be plugged in for at least 2 - 4 hours, depending on outside temperatures, to properly warm the engine coolant. Use an appropriate timer to turn the engine block heater on.
6. Before starting the engine, unplug and properly store the cord to keep it away from moving parts.

## MEMO

# 6 In case of emergency


Emergency engine shut off
(Push-button ignition models only) . . . . . 6-2
Hazard warning flasher switch . . . . . 6-2
Flat tire . . . . . 6-3
Tire Pressure Monitoring System (TPMS) . . . . . 6-3
Changing a flat tire . . . . . 6-3
Jump starting . . . . . 6-8
Push starting . . . . . 6-10
If your vehicle overheats . . . . . 6-10
Towing your vehicle . . . . . 6-11
Towing recommended by NISSAN . . . . . 6-12
Vehicle recovery (freeing a stuck vehicle) . . . . . 6-14

## EMERGENCY ENGINE SHUT OFF (Push-button ignition models only)

To shut off the engine in an emergency situation while driving, perform the following procedure:

– Rapidly push the push-button ignition switch 3 consecutive times in less than 1.5 seconds, or

– Push and hold the push-button ignition switch for more than 2 seconds.

## HAZARD WARNING FLASHER SWITCH

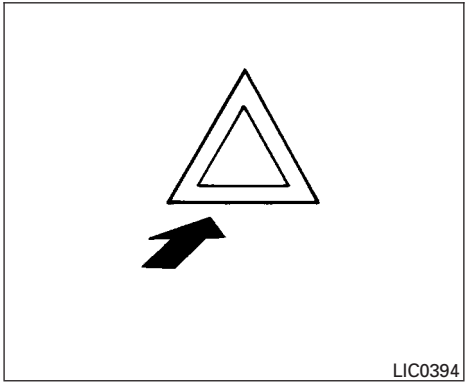


Push the switch on to warn other drivers when you must stop or park under emergency conditions. All turn signal lights flash.

**⚠ WARNING**

- **If stopping for an emergency, be sure to move the vehicle well off the road.**
- **Do not use the hazard warning flashers while moving on the highway unless unusual circumstances force you to drive so slowly that your vehicle might become a hazard to other traffic.**
- **Turn signals do not work when the hazard warning flasher lights are on.**

The flashers will operate with the ignition switch placed in any position.

**Some state laws may prohibit the use of the hazard warning flasher switch while driving.**

## TIRE PRESSURE MONITORING SYSTEM (TPMS)

This vehicle is equipped with the Tire Pressure Monitoring System (TPMS). It monitors tire pressure of all tires except the spare. When the low tire pressure warning light is lit, and the CHECK TIRE PRES warning message is displayed in the odometer, one or more of your tires is significantly under-inflated. If the vehicle is being driven with low tire pressure, the TPMS will activate and warn you of it by the low tire pressure warning light. This system will activate only when the vehicle is driven at speeds above 16 MPH (25 km/h). For more details, refer to "Warning/indicator lights and audible reminders" in the "Instruments and controls" section, and "Tire Pressure Monitoring System (TPMS)" in the "Starting and driving" section.

**⚠ WARNING**

- **Radio waves could adversely affect electric medical equipment. Those who use a pacemaker should contact the electric medical equipment manufacturer for the possible influences before use.**
- **If the low tire pressure warning light illuminates while driving, avoid sudden steering maneuvers or abrupt braking, reduce vehicle speed, pull off the road to a safe location and stop the vehicle as soon as possible. Driving with under-inflated tires may permanently damage the tires and increase the likelihood of tire failure. Serious vehicle damage could occur and may lead to an accident and could result in serious personal injury. Check the tire pressure for all four tires. Adjust the tire pressure to the recommended COLD tire pressure shown on the Tire and Loading Information label to turn the low tire pressure warning light OFF. If you have a flat tire, replace it with a spare tire as soon as possible.**
- **When a spare tire is mounted or a wheel is replaced, the TPMS will not function and the low tire pressure warning light will flash for approximately 1 minute. The light will remain on after 1 minute. Contact your NISSAN dealer as soon as possible for tire replacement and/or system resetting.**
- **Replacing tires with those not originally specified by NISSAN could affect the proper operation of the TPMS.**
- **Do not inject any tire liquid or aerosol tire sealant into the tires, as this may cause a malfunction of the tire pressure sensors.**

## CHANGING A FLAT TIRE

If you have a flat tire, follow the instructions below:

### Stopping the vehicle

1. Safely move the vehicle off the road and away from traffic.
2. Turn on the hazard warning flashers.
3. Park on a level surface and apply the parking brake. Shift the manual transmission into R (Reverse), or the CVT into P (Park).
4. Turn off the engine.
5. Raise the hood to warn other traffic and to signal professional road assistance personnel that you need assistance.
6. Have all passengers get out of the vehicle and stand in a safe place, away from traffic and clear of the vehicle.

**⚠ WARNING**

- **Make sure the parking brake is securely applied and the manual transmission is shifted into R (Reverse), or the CVT is shifted into P (Park).**
- **Never change tires when the vehicle is on a slope, ice or slippery areas. This is hazardous.**
- **Never change tires if oncoming traffic is close to your vehicle. Wait for professional road assistance.**

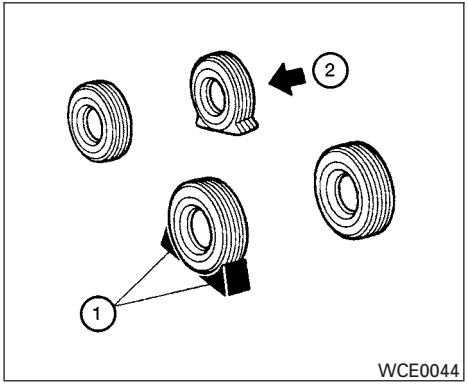

WCE0044

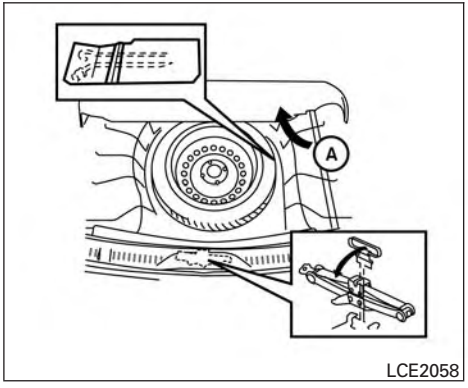

LCE2058

## Blocking wheels

Place suitable blocks ① at both the front and back of the wheel diagonally opposite the flat tire ② to prevent the vehicle from moving when it is jacked up.

**⚠ WARNING**

**Be sure to block the wheel as the vehicle may move and result in personal injury.**

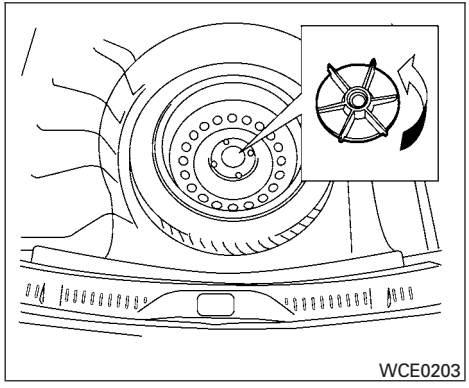


## Getting the spare tire and tools

1. Open the trunk. Lift the trunk floor carpeting and spare tire cover Ⓐ. Remove the jack and the spare tire as indicated.
2. To remove the jack, take off the strap and lift out. If necessary, remove the spare tire first to easily access the jack strap.

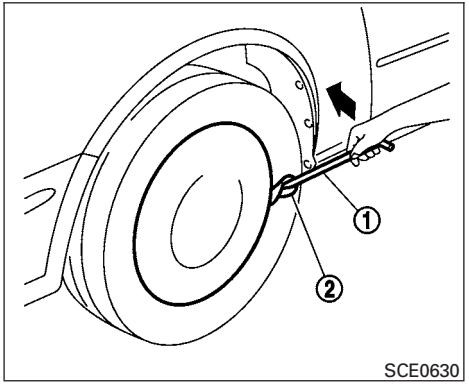


## Removing the wheel cover (if so equipped)

**⚠CAUTION**

**Do not use your hands to pry off wheel caps or wheel covers. Doing so could result in personal injury.**

To remove the wheel cover, use the jack rod ① as illustrated.

Apply cloth ② between the wheel and jack rod to prevent damaging the wheel and wheel cover.

Use caution not to scratch the wheel cover or wheel surface.

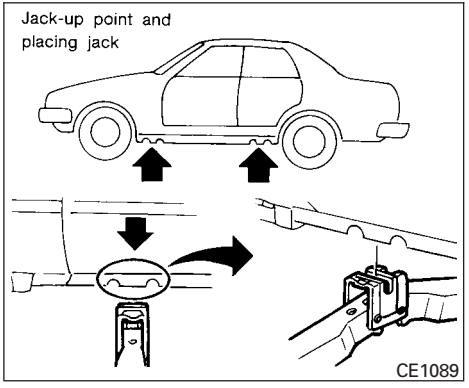


## Jacking up vehicle and removing the damaged tire

**⚠WARNING**

- **Never get under the vehicle while it is supported only by the jack. If it is necessary to work under the vehicle, support it with safety stands.**
- **Use only the jack provided with your vehicle to lift the vehicle. Do not use the jack provided with your vehicle on other vehicles. The jack is designed for lifting only your vehicle during a tire change.**

- **Use the correct jack-up points. Never use any other part of the vehicle for jack support.**
- **Never jack up the vehicle more than necessary.**
- **Never use blocks on or under the jack.**
- **Do not start or run the engine while vehicle is on the jack. It may cause the vehicle to move. This is especially true for vehicles with limited slip differentials.**
- **Do not allow passengers to stay in the vehicle while it is on the jack.**
- **Never run the engine with a wheel(s) off the ground. It may cause the vehicle to move.**

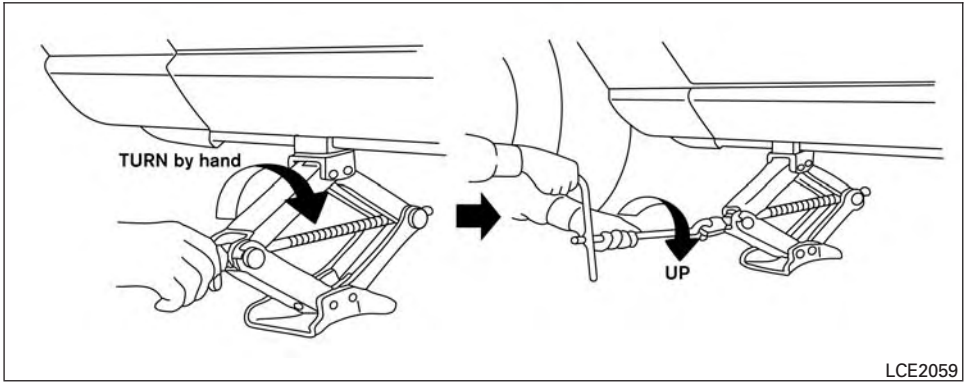


Always refer to the proper illustrations for the correct placement and jack-up points for your specific vehicle model and jack type.

**Carefully read the caution label attached to the jack body and the following instructions.**

1. Loosen each wheel nut one or two turns by turning counterclockwise with the wheel nut wrench. **Do not remove the wheel nuts until the tire is off the ground.**
2. Place the jack directly under the jack-up point as illustrated so the top of the jack contacts the vehicle at the jack-up point. Align the jack head between the two notches in the front or the rear as shown. Also fit the groove of the jack head between the notches as shown.

   **The jack should be used on firm and level ground.**
3. To lift the vehicle, securely hold the jack lever and rod with both hands. Carefully raise the vehicle until the tire clears the ground. Remove the wheel nuts, and then remove the tire.

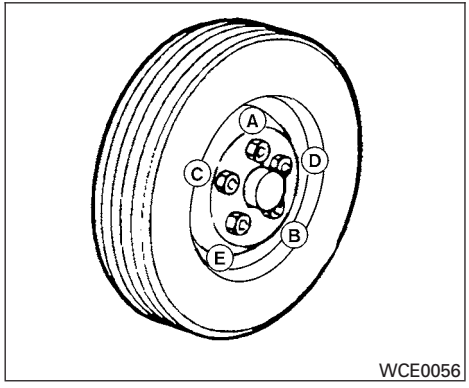


## Installing the spare tire

**The spare tire is designed for emergency use. See specific instructions under the heading "Wheels and tires" in the "Maintenance and do-it-yourself" section of this manual.**

1. Clean any mud or dirt from the surface between the wheel and hub.
2. Carefully put the spare tire on and tighten the wheel nuts finger tight.
3. With the wheel nut wrench, tighten wheel nuts alternately and evenly as illustrated until they are tight.
4. Lower the vehicle slowly until the tire touches the ground. Then, with the wheel nut wrench, tighten the wheel nuts securely in the sequence illustrated (Ⓐ, Ⓑ, Ⓒ, Ⓓ, Ⓔ ). Lower the vehicle completely.

**⚠ WARNING**

- **Incorrect wheel nuts or improperly tightened wheel nuts can cause the wheel to become loose or come off. This could cause an accident.**
- **Do not use oil or grease on the wheel studs or nuts. This could cause the nuts to become loose.**
- **Retighten the wheel nuts when the vehicle has been driven for 600 miles (1,000 km) (also in cases of a flat tire, etc.).**

**As soon as possible, tighten the wheel nuts to the specified torque with a torque wrench.**

**Wheel nut tightening torque:**
**83 ft-lb (113 N·m)**

**The wheel nuts must be kept tightened to specification at all times. It is recommended that wheel nuts be tightened to specification at each lubrication interval.**

**Adjust tire pressure to the COLD pressure.**

**COLD pressure: After vehicle has been parked for three hours or more or driven less than 1 mile (1.6 km).**

**COLD tire pressures are shown on the Tire and Loading Information Label.**

5. Securely store the flat tire in the vehicle.

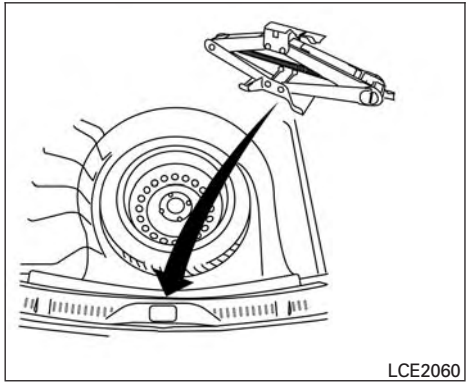


6. Install the jack in its storage area and tighten the jack strap .
7. Place the spare tire cover and the trunk floor carpeting over the damaged tire.
8. Close the trunk.

**WARNING**

- **Always make sure that the spare tire and jacking equipment are properly secured after use. Such items can become dangerous projectiles in an accident or sudden stop.**
- **The spare tire is designed for emergency use. See specific instructions under the heading "Wheels and tires" in the "Maintenance and do-it-yourself" section of this manual.**

## JUMP STARTING

To start your engine with a booster battery, the instructions and precautions below must be followed.

**WARNING**

- **If done incorrectly, jump starting can lead to a battery explosion, resulting in severe injury or death. It could also damage your vehicle.**
- **Explosive hydrogen gas is always present in the vicinity of the battery. Keep all sparks and flames away from the battery.**
- **Do not allow battery fluid to come into contact with eyes, skin, clothing or painted surfaces. Battery fluid is a corrosive sulfuric acid solution which can cause severe burns. If the fluid should come into contact with anything, immediately flush the contacted area with water.**
- **Keep battery out of the reach of children.**
- **The booster battery must be rated at 12 volts. Use of an improperly rated battery can damage your vehicle.**

- **Whenever working on or near a battery, always wear suitable eye protectors (for example, goggles or industrial safety spectacles) and remove rings, metal bands, or any other jewelry. Do not lean over the battery when jump starting.**
- **Do not attempt to jump start a frozen battery. It could explode and cause serious injury.**
- **Your vehicle has an automatic engine cooling fan. It could come on at any time. Keep hands and other objects away from it.**

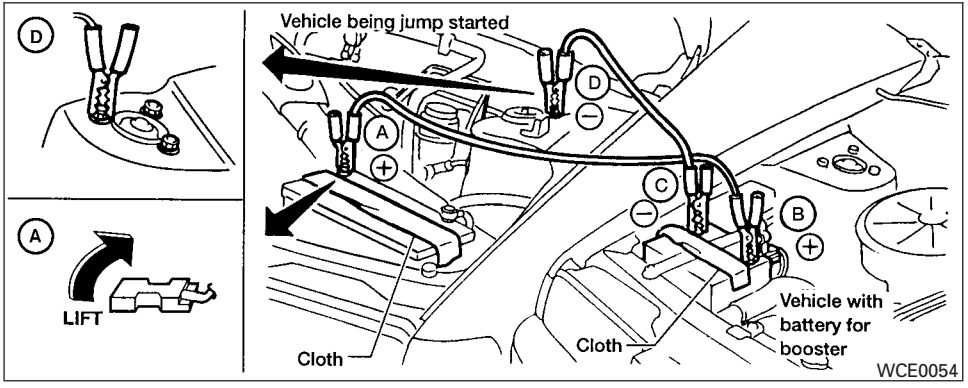


**⚠ WARNING**

**Always follow the instructions below. Failure to do so could result in damage to the charging system and cause personal injury.**

1. If the booster battery is in another vehicle, position the two vehicles to bring their batteries near each other.

   **Do not allow the two vehicles to touch.**

2. Apply the parking brake. Move the shift lever to P (Park). Switch off all unnecessary electrical systems (lights, heater, air conditioner, etc.).
3. Turn the ignition switch to the “LOCK” position.
4. Remove the vent caps on the battery (if so equipped). Cover the battery with an old cloth to reduce explosion hazard.
5. Connect the jumper cables in the sequence illustrated (Ⓐ, Ⓑ, Ⓒ, Ⓓ).

## PUSH STARTING

**⚠ CAUTION**

- **Always connect positive (+) to positive (+) and negative (−) to body ground (for example, strut mounting bolt, engine lift bracket, etc.) — not to the battery.**
- **Make sure the jumper cables do not touch moving parts in the engine compartment and that the cable clamps do not contact any other metal.**

6. Start the engine of the booster vehicle and let it run for a few minutes.
7. Keep the engine speed of the booster vehicle at about 2,000 rpm and start the engine of the vehicle being jump started.

**⚠ CAUTION**

**Do not keep the starter motor engaged for more than 10 seconds. If the engine does not start right away, place the ignition switch in the OFF position and wait 3 to 4 seconds before trying again.**

8. After starting the engine, carefully disconnect the negative cable and then the positive cable.
9. Replace the vent caps (if so equipped). Be sure to dispose of the cloth used to cover the vent holes as it may be contaminated with corrosive acid.

**⚠ CAUTION**

- **Do not push start this vehicle. The three-way catalyst may be damaged.**
- **Continuously Variable Transmission (CVT) models and Manual Transmission (MT) cannot be push-started or tow-started. Attempting to do so may cause transmission damage**
- **For manual transmission (MT) models, never try to start the vehicle by towing it. When the engine starts, the forward surge could cause the vehicle to collide with the tow vehicle.**

## IF YOUR VEHICLE OVERHEATS

If your vehicle is overheating (indicated by an extremely high temperature gauge reading), or if you feel a lack of engine power, detect abnormal noise, etc., take the following steps.

**⚠ WARNING**

- **Do not continue to drive if your vehicle overheats. Doing so could cause engine damage or a vehicle fire.**
- **To avoid the danger of being scalded, never remove the radiator cap while the engine is still hot. When the radiator cap is removed, pressurized hot water will spurt out, possibly causing serious injury.**
- **Do not open the hood if steam is coming out.**

1. Move the vehicle safely off the road, apply the parking brake and move the shift lever to N (Neutral) (manual transmission) or to P (Park) (CVT).

   **Do not stop the engine.**

2. Turn off the air conditioner (if so equipped). Open all the windows, move the heater or air conditioner temperature control to maximum hot and fan control to high speed.

3. Get out of the vehicle. Look and listen for steam or coolant escaping from the radiator before opening the hood. (If steam or coolant is escaping, turn off the engine.) Do not open the hood further until no steam or coolant can be seen.
4. Open the engine hood.

**⚠ WARNING**

**If steam or water is coming from the engine, stand clear to prevent getting burned.**

5. Visually check drive belts for damage or looseness. Also check if the cooling fan is running. The radiator hoses and radiator should not leak water. If coolant is leaking, the water pump belt is missing or loose, or the cooling fan does not run, stop the engine.

**⚠ WARNING**

**Be careful not to allow your hands, hair, jewelry or clothing to come into contact with, or get caught in, engine belts or the engine cooling fan. The engine cooling fan can start at any time.**

6. After the engine cools down, check the coolant level in the engine coolant reservoir with the engine running. Add coolant to the engine coolant reservoir if necessary. Have your vehicle repaired at a NISSAN dealer.

When towing your vehicle, all State (Provincial in Canada) and local regulations for towing must be followed. Incorrect towing equipment could damage your vehicle. Towing instructions are available from a NISSAN dealer. Local service operators are generally familiar with the applicable laws and procedures for towing. To assure proper towing and to prevent accidental damage to your vehicle, NISSAN recommends having a service operator tow your vehicle. It is advisable to have the service operator carefully read the following precautions:

**⚠ WARNING**

- **Never ride in a vehicle that is being towed.**
- **Never get under your vehicle after it has been lifted by a tow truck.**

**⚠ CAUTION**

- **When towing, make sure that the transmission, axles, steering system and powertrain are in working condition. If any of these conditions apply, dollies or a flatbed tow truck must be used.**
- **Always attach safety chains before towing.**

For information about towing your vehicle behind a recreational vehicle (RV), refer to “Flat towing” in the “Starting and Driving” section of this manual.

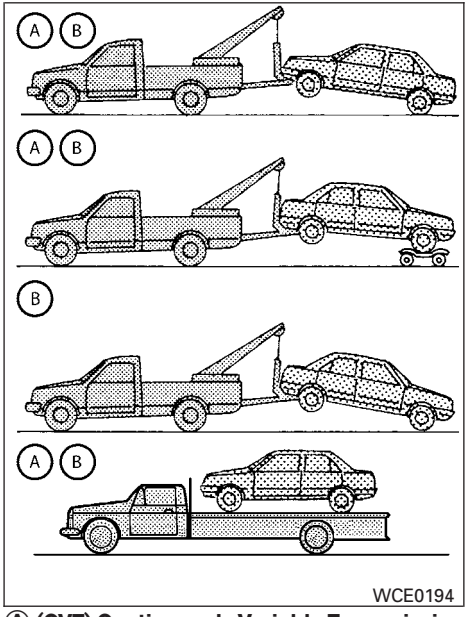


**Ⓐ (CVT) Continuously Variable Transmission**
**Ⓑ (M/T) Manual transmission**

## TOWING RECOMMENDED BY NISSAN

NISSAN recommends that your vehicle be towed with the driving (front) wheels off the ground or place the vehicle on a flat bed truck as illustrated.

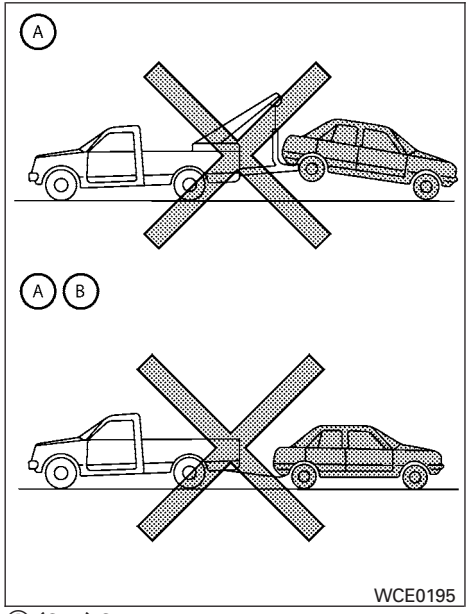


Ⓐ (CVT) Continuously Variable Transmission
Ⓑ (M/T) Manual transmission

**⚠ CAUTION**

- **Never tow Continuously Variable Transmission (CVT) models with the front wheels on the ground or four wheels on the ground (forward or backward), as this may cause serious and expensive damage to the transmission. If it is necessary to tow the vehicle with the rear wheels raised always use towing dollies under the front wheels.**
- **When towing Continuously Variable Transmission (CVT) models with the front wheels on towing dollies, or when towing manual transmission (M/T) models with the front wheels on the ground:**
  - **Place the ignition switch to the OFF position, and secure the steering wheel in a straight-ahead position with a rope or similar device. Never secure the steering wheel by placing the ignition switch in the LOCK position. This may damage the steering lock mechanism (for models with steering lock mechanism).**
  - **Move the shift lever to the N (Neutral) position.**
- **When towing Continuously Variable Transmission (CVT) or manual transmission models (M/T) with the rear wheels on the ground (if you do not use towing dollies): Always release the parking brake.**
- **Observe the following restricted towing speeds and distances for manual transmissions (M/T) only:**
  - **Speed: Below 80 km/h (50 MPH)**
  - **Distance: Less than 80 km (50 miles)**

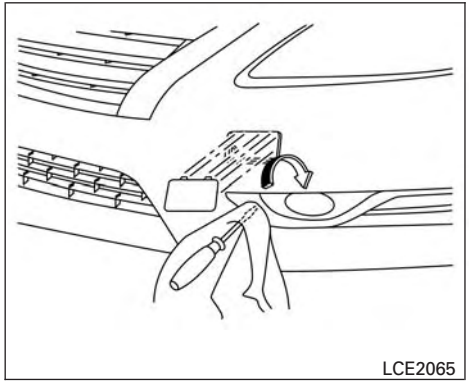


**Front (if so equipped)**

## VEHICLE RECOVERY (freeing a stuck vehicle)

Do not use the hook to tow the vehicle.

- Remove the cover bumper bracket using a flat screwdriver or any flat tool.
- To protect the bumper body, place a piece of cloth between the tool and the vehicle.
- The tool used should be inserted by the lower portion of the cover.

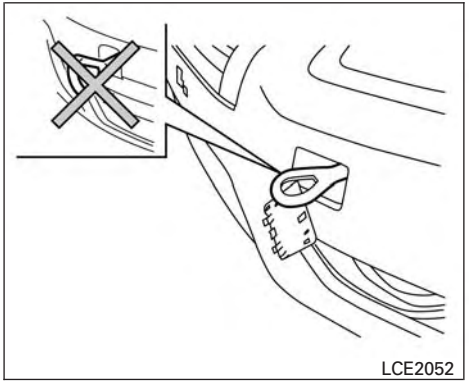


**Front (if so equipped)**

- To remove the cover it is necessary to rotate the flat tool, as shown in the image, in order to avoid any damage to the body.

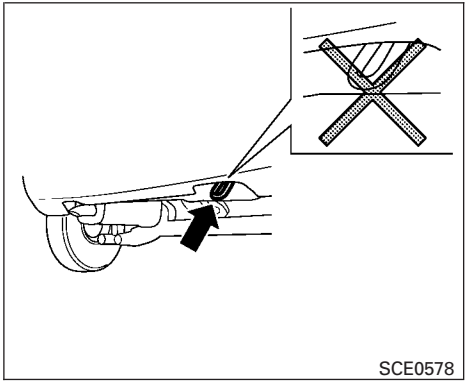


**Rear (if so equipped)**

Do not use the hook to tow the vehicle.

### Pulling a stuck vehicle

**⚠ WARNING**

**To avoid vehicle damage, serious personal injury or death when recovering a stuck vehicle:**

- **Contact a professional towing service to recover the vehicle if you have any questions regarding the recovery procedure.**

- **Do not use the vehicle tie-downs to tow or free a stuck vehicle.**
- **Only use devices specifically designed for vehicle recovery and follow the manufacturer's instructions.**
- **Always pull the recovery device straight out from the front of the vehicle. Never pull at an angle.**
- **Route recovery devices so they do not touch any part of the vehicle except the attachment point.**

If your vehicle is stuck in sand, snow, mud, etc., use a tow strap or other device designed specifically for vehicle recovery. Always follow the manufacturer's instructions for the recovery device.

Do not use the tie-down hooks for towing or vehicle recovery.

## Rocking a stuck vehicle

**⚠ WARNING**

- **Stand clear of a stuck vehicle.**
- **Do not spin your tires at high speed. This could cause them to explode and result in serious injury. Parts of your vehicle could also overheat and be damaged.**

If your vehicle is stuck in sand, snow, mud, etc., use the following procedure:

1. Turn off the Vehicle Dynamic Control System.
2. Make sure the area in front and behind the vehicle is clear of obstructions.
3. Turn the steering wheel right and left to clear an area around the front tires.
4. Slowly rock the vehicle forward and backward.
   - Shift back and forth between R (Reverse) and D (Drive) (CVT models) or 1st (Low) and R (Reverse) (M/T models).
   - Apply the accelerator as little as possible to maintain the rocking motion.
   - Release the accelerator pedal before shifting between R (Reverse) and D (Drive) (CVT models) or 1st (Low) and R (Reverse) (M/T models).
   - Do not spin the tires above 35 MPH (55 km/h).
5. If the vehicle cannot be freed after a few tries, contact a professional towing service to remove the vehicle.

## MEMO

# 7 Appearance and care


Cleaning exterior . . . . . 7-2
Washing . . . . . 7-2
Waxing . . . . . 7-2
Removing spots . . . . . 7-3
Underbody . . . . . 7-3
Glass . . . . . 7-3
Aluminum alloy wheels . . . . . 7-3
Chrome parts . . . . . 7-3
Tire dressings . . . . . 7-3
Cleaning interior . . . . . 7-4
Air fresheners . . . . . 7-4
Floor mats . . . . . 7-4
Seat belts . . . . . 7-5
Corrosion protection . . . . . 7-6
Most common factors contributing to vehicle corrosion . . . . . 7-6
Environmental factors influence the rate of corrosion . . . . . 7-6
To protect your vehicle from corrosion . . . . . 7-6

In order to maintain the appearance of your vehicle, it is important to take proper care of it.

To protect the paint surfaces, please wash your vehicle as soon as you can:

- after a rainfall to prevent possible damage from acid rain.
- after driving on coastal roads.
- when contaminants such as soot, bird droppings, tree sap, metal particles or bugs get on the paint surface.
- when dust or mud builds up on the surface.

Whenever possible, store or park your vehicle inside a garage or in a covered area.

When it is necessary to park outside, park in a shady area or protect the vehicle with a body cover.

**Be careful not to scratch the paint surface when putting on or removing the body cover.**

## WASHING

Wash dirt off with a wet sponge and plenty of water. Clean the vehicle thoroughly using a mild soap, a special vehicle soap or general purpose dishwashing liquid mixed with clean, lukewarm (never hot) water.

**⚠ CAUTION**

- **Do not use car washes that use acid in the detergent. Some car washes, especially brushless ones, use some acid for cleaning. The acid may react with some plastic vehicle components, causing them to crack. This could affect their appearance, and also could cause them not to function properly. Always check with your car wash to confirm that acid is not used.**
- **Do not wash the vehicle with strong household soap, strong chemical detergents, gasoline or solvents.**
- **Do not wash the vehicle in direct sunlight or while the vehicle body is hot, as the surface may become water-spotted.**
- **Avoid using tight-napped or rough cloths, such as washing mitts. Care must be taken when removing caked-on dirt or other foreign substances so the paint surface is not scratched or damaged.**

Rinse the vehicle thoroughly with plenty of clean water.

Inside flanges, seams and folds on the doors, hatches and hood are particularly vulnerable to the effects of road salt. Therefore, these areas must be cleaned regularly. Take care that the drain holes in the lower edge of the door are open. Spray water under the body and in the wheel wells to loosen the dirt and wash away road salt.

A damp chamois can be used to dry the vehicle to avoid water spots.

## WAXING

Regular waxing protects the paint surface and helps retain new vehicle appearance. Polishing is recommended to remove built-up wax residue and to avoid a weathered appearance before re-applying wax.

A NISSAN dealer can assist you in choosing the proper product.

- Wax your vehicle only after a thorough washing. Follow the instructions supplied with the wax.
- Do not use a wax containing any abrasives, cutting compounds or cleaners that may damage the vehicle finish.

Machine compounding or aggressive polishing on a base coat/clear coat paint finish may dull the finish or leave swirl marks.

## REMOVING SPOTS

Remove tar and oil spots, industrial dust, insects, and tree sap as quickly as possible from the surface of the paint to avoid lasting damage or staining. Special cleaning products are available at a NISSAN dealer or any automotive accessory store.

## UNDERBODY

In areas where road salt is used in winter, it is necessary to clean the underbody regularly in order to prevent dirt and salt from building up and causing the acceleration of corrosion on the underbody and suspension. Before the winter period and again in the spring, the underseal must be checked and, if necessary, retreated.

## GLASS

Use glass cleaner to remove smoke and dust film from the glass surfaces. It is normal for glass to become coated with a film after the vehicle is parked in the hot sun. Glass cleaner and a soft cloth will easily remove this film.

**⚠ CAUTION**

**When cleaning the inside of the windows, do not use sharp-edged tools, abrasive cleaners or chlorine-based disinfectant cleaners. They could damage the electrical conductors, radio antenna elements or rear window defroster elements.**

## ALUMINUM ALLOY WHEELS

Wash the wheels regularly with a sponge dampened in a mild soap solution, especially during winter months in areas where road salt is used. If not removed, road salt can discolor the wheels.

**⚠ CAUTION**

**Follow the directions below to avoid staining or discoloring the wheels:**

- **Do not use a cleaner that uses strong acid or alkali contents to clean the wheels.**
- **Do not apply wheel cleaners to the wheels when they are hot. The wheel temperature should be the same as ambient temperature.**
- **Rinse the wheel to completely remove the cleaner within 15 minutes after the cleaner is applied.**

## CHROME PARTS

Clean all chrome parts regularly with a non-abrasive chrome polish to maintain the finish.

## TIRE DRESSINGS

NISSAN does not recommend the use of tire dressings. Tire manufacturers apply a coating to the tires to help reduce discoloration of the rubber. If a tire dressing is applied to the tires, it may react with the coating and form a compound. This compound may come off the tire while driving and stain the vehicle paint.

If you choose to use a tire dressing, take the following precautions:

- Use a water-based tire dressing. The coating on the tire dissolves more easily than with an oil-based tire dressing.
- Apply a light coat of tire dressing to help prevent it from entering the tire tread/grooves (where it would be difficult to remove).
- Wipe off excess tire dressing using a dry towel. Make sure the tire dressing is completely removed from the tire tread/grooves.
- Allow the tire dressing to dry as recommended by the tire dressing manufacturer.

This vehicle has new and unique surfaces on the center console and door pull finishers. If cleaning is required use mild soap and water. However if mild soap and water won't clean the center console and door pull finishers, use NISSAN Vinyl and Leather Cleaner (or equivalent).

Occasionally remove loose dust from the interior trim, plastic parts and seats using a vacuum cleaner or soft bristled brush. Wipe the vinyl and leather surfaces with a clean, soft cloth dampened in mild soap solution, then wipe clean with a dry, soft cloth.

Regular care and cleaning is required in order to maintain the appearance of the leather.

Before using any fabric protector, read the manufacturer's recommendations. Some fabric protectors contain chemicals that may stain or bleach the seat material.

Use a cloth dampened only with water to clean the meter and gauge lens.

**⚠ WARNING**

**Do not use water or acidic cleaners (hot steam cleaners) on the seat. This can damage the seat or occupant classification sensor. This can also affect the operation of the air bag system and result in serious personal injury.**

**⚠ CAUTION**

- **Never use benzene, thinner, or any similar material on the interior surfaces or surface damage may occur. Such damage is not covered under the NISSAN warranty.**
- **Small dirt particles can be abrasive and damaging to leather surfaces and should be removed promptly. Do not use saddle soap, car waxes, polishes, oils, cleaning fluids, solvents, detergents or ammonia-based cleaners as they may damage the leather's natural finish.**
- **Never use fabric protectors unless recommended by the manufacturer.**
- **Do not use glass or plastic cleaner on meter or gauge lens covers. It may damage the lens cover.**

## AIR FRESHENERS

Most air fresheners use a solvent that could affect the vehicle interior. If you use an air freshener, take the following precautions:

- Hanging-type air fresheners can cause permanent discoloration when they contact vehicle interior surfaces. Place the air freshener in a location that allows it to hang free and not contact an interior surface.
- Liquid-type air fresheners typically clip on the vents. These products can cause immediate damage and discoloration when spilled on interior surfaces.

Carefully read and follow the manufacturer's instructions before using the air fresheners.

## FLOOR MATS

**⚠ WARNING**

**To avoid potential pedal interference that may result in a collision or injury:**

- **NEVER place a floor mat on top of another floor mat in the driver front position.**
- **Use only genuine NISSAN floor mats specifically designed for use in your vehicle model. See your NISSAN dealer for more information.**
- **Properly position the mats in the floorwell using the floor mat positioning aid. See "Floor mat positioning aid" in this section.**

The use of genuine NISSAN floor mats can extend the life of your vehicle carpet and make it easier to clean the interior. Mats should be maintained with regular cleaning and replaced if they become excessively worn.

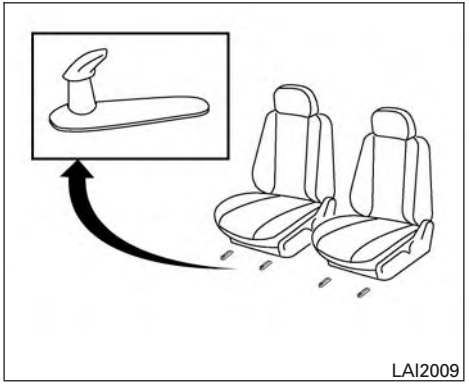


## Floor mat positioning aid

This vehicle includes two driver's side front floor mat brackets and two passenger's side front floor mat brackets to help keep your floor mats in place. Genuine NISSAN floor mats have been specially designed for your vehicle model. The driver's and passenger's side floor mats have two grommet holes incorporated in them. Position each mat by placing the floor mat bracket hook through the floor mat grommet holes while centering the mat in the floorwell.

Periodically check to make certain the mats are properly positioned.

## SEAT BELTS

The seat belts can be cleaned by wiping them with a sponge dampened in a mild soap solution. Allow the belts to dry completely in the shade before using them. See "Seat belt maintenance" in the "Safety – Seats, seat belts and supplemental restraint system" section of this manual.

**⚠ WARNING**

**Do not allow wet seat belts to roll up in the retractor. NEVER use bleach, dye or chemical solvents to clean the seat belts, since these materials may severely weaken the seat belt webbing.**

## MOST COMMON FACTORS CONTRIBUTING TO VEHICLE CORROSION

- The accumulation of moisture-retaining dirt and debris in body panel sections, cavities, and other areas.
- Damage to paint and other protective coatings caused by gravel and stone chips or minor traffic accidents.

## ENVIRONMENTAL FACTORS INFLUENCE THE RATE OF CORROSION

### Moisture

Accumulation of sand, dirt and water on the vehicle body underside can accelerate corrosion. Wet floor coverings will not dry completely inside the vehicle and should be removed for drying to avoid floor panel corrosion.

### Relative humidity

Corrosion will be accelerated in areas of high relative humidity, especially those areas where the temperatures stay above freezing and where atmospheric pollution exists and road salt is used.

### Temperature

High temperatures accelerate the rate of corrosion to those parts which are not well ventilated.

### Air pollution

Industrial pollution, the presence of salt in the air in coastal areas, or heavy road salt use accelerates the corrosion process. Road salt also accelerates the disintegration of paint surfaces.

## TO PROTECT YOUR VEHICLE FROM CORROSION

- Wash and wax your vehicle often to keep the vehicle clean.
- Always check for minor damage to the paint and repair it as soon as possible.
- Keep drain holes at the bottom of the doors open to avoid water accumulation.
- Check the underbody for accumulation of sand, dirt or salt. If present, wash with water as soon as possible.

**⚠ CAUTION**

- **NEVER remove dirt, sand or other debris from the passenger compartment by washing it out with a hose. Remove dirt with a vacuum cleaner or broom.**
- **Never allow water or other liquids to come in contact with electronic components inside the vehicle as this may damage them.**

Chemicals used for road surface de-icing are extremely corrosive. They accelerate corrosion and deterioration of underbody components such as the exhaust system, fuel and brake lines, brake cables, floor pan and fenders.

**In winter, the underbody must be cleaned periodically.**

For additional protection against rust and corrosion, which may be required in some areas, consult a NISSAN dealer.

# 8 Maintenance and do-it-yourself


Maintenance requirements . . . . . 8-2
General maintenance . . . . . 8-2
Explanation of general maintenance items . . . . . 8-2
Maintenance precautions . . . . . 8-5
Engine compartment check locations . . . . . 8-6
Engine cooling system . . . . . 8-7
Checking engine coolant level . . . . . 8-8
Changing engine coolant . . . . . 8-8
Engine oil . . . . . 8-9
Checking engine oil level . . . . . 8-9
Changing engine oil . . . . . 8-10
Changing engine oil filter . . . . . 8-11
Continuously Variable Transmission (CVT) fluid (if so equipped) . . . . . 8-11
Brake and clutch (if so equipped) fluid . . . . . 8-12
Windshield-washer fluid . . . . . 8-12
Windshield-washer fluid reservoir . . . . . 8-12
Battery . . . . . 8-13
Jump starting . . . . . 8-15
Variable voltage control system . . . . . 8-15
Drive belt . . . . . 8-16
Spark plugs . . . . . 8-16
Replacing spark plugs . . . . . 8-16
Air cleaner . . . . . 8-17
In-cabin microfilter . . . . . 8-18
Windshield wiper blades . . . . . 8-18
Cleaning . . . . . 8-18
Replacing . . . . . 8-19
Brakes . . . . . 8-21
Fuses . . . . . 8-21
Engine compartment . . . . . 8-22
Passenger compartment . . . . . 8-23
Battery replacement . . . . . 8-25
Keyfob (if so equipped) . . . . . 8-25
NISSAN Intelligent Key® (if so equipped) . . . . . 8-27
Lights . . . . . 8-28
Headlights . . . . . 8-28
Fog lights (if so equipped) . . . . . 8-29
Exterior and interior lights . . . . . 8-30
Wheels and tires . . . . . 8-32
Tire pressure . . . . . 8-32
Tire labeling . . . . . 8-36
Types of tires . . . . . 8-38
Tire chains . . . . . 8-39
Changing wheels and tires . . . . . 8-39

## MAINTENANCE REQUIREMENTS

Your NISSAN has been designed to have minimum maintenance requirements with long service intervals to save you both time and money; however, some day-to-day and regular maintenance is essential to maintain your NISSAN's good mechanical condition as well as its emissions and engine performance.

It is the owner's responsibility to make sure that the scheduled maintenance, as well as general maintenance, is performed.

As the vehicle owner, you are the only one who can ensure that your vehicle receives proper maintenance. You are a vital link in the maintenance chain.

### Scheduled maintenance

For your convenience, both required and optional scheduled maintenance items are described and listed in your "NISSAN Service and Maintenance Guide". You must refer to that guide to ensure that necessary maintenance is performed on your NISSAN at regular intervals.

### General maintenance

General maintenance includes those items which should be checked during normal day-to-day operation. They are essential for proper vehicle operation. It is your responsibility to perform these maintenance procedures regularly as prescribed.

Performing general maintenance checks requires minimal mechanical skill and only a few general automotive tools.

These checks or inspections can be done by you, a qualified technician or, if you prefer, a NISSAN dealer.

### Where to go for service

If maintenance service is required or your vehicle appears to malfunction, have the systems checked and corrected by a NISSAN dealer.

NISSAN technicians are well-trained specialists who are kept up-to-date with the latest service information through technical bulletins, service tips and in-dealership training programs. They are completely qualified to work on NISSAN vehicles **before** they work on your vehicle rather than after they have worked on it.

You can be confident that a NISSAN dealer's service department performs the best job to meet the maintenance requirements on your vehicle — in a reliable and economical way.

## GENERAL MAINTENANCE

During the normal day-to-day operation of the vehicle, general maintenance should be performed regularly as prescribed in this section. If you detect any unusual sounds, vibrations or smells, be sure to check for the cause or have a NISSAN dealer do it promptly. In addition, you should notify a NISSAN dealer if you think that repairs are required.

When performing any checks or maintenance work, closely observe the "Maintenance precautions" in this section.

### EXPLANATION OF GENERAL MAINTENANCE ITEMS

**Additional information on the following items with " * " is found in this section.**

#### Outside the vehicle

The maintenance items listed here should be performed from time to time, unless otherwise specified.

**Doors and engine hood** Check that the doors and engine hood operate properly. Also ensure that all latches lock securely. Lubricate hinges, latches, latch pins, rollers and links as necessary. Make sure that the secondary latch keeps the hood from opening when the primary latch is released.

When driving in areas using road salt or other corrosive materials, check lubrication frequently.

**Lights*** Clean the headlights on a regular basis. Make sure that the headlights, stop lights, tail lights, turn signal lights, and other lights are all operating properly and installed securely. Also check headlight aim.

**Road wheel nuts (lug nuts)*** When checking the tires, make sure no wheel nuts are missing, and check for any loose wheel nuts. Tighten if necessary.

**Tire rotation*** Tires should be rotated every 5,000 miles (8,000 km).

**Tires*** Check the pressure with a gauge often and always prior to long distance trips. If necessary, adjust the pressure in all tires, including the spare, to the pressure specified. Check carefully for damage, cuts or excessive wear.

**Tire Pressure Monitoring System (TPMS) transmitter components** Replace the TPMS transmitter grommet seal, valve core and cap when the tires are replaced due to wear or age.

**Wheel alignment and balance** If the vehicle should pull to either side while driving on a straight and level road, or if you detect uneven or abnormal tire wear, there may be a need for wheel alignment. If the steering wheel or seat vibrates at normal highway speeds, wheel balancing may be needed.

- For additional information regarding tires, refer to “Important Tire Safety Information” (US) or “Tire Safety Information” (Canada) in the Warranty Information Booklet.

**Windshield** Clean the windshield on a regular basis. Check the windshield at least every six months for cracks or other damage. Have a damaged windshield repaired by a qualified repair facility.

**Windshield wiper blades*** Check for cracks or wear if they do not wipe properly.

## Inside the vehicle

The maintenance items listed here should be checked on a regular basis, such as when performing periodic maintenance, cleaning the vehicle, etc.

**Additional information on the following items with an “*” is found in this section.**

**Accelerator pedal** Check the pedal for smooth operation and make sure the pedal does not bind or require uneven effort. Keep the floor mat away from the pedal.

**Brake pedal** Check the pedal for smooth operation. If the brake pedal suddenly goes down further than normal, the pedal feels spongy or the vehicle seems to take longer to stop, see a NISSAN dealer immediately. Keep the floor mat away from the pedal.

**Brakes** Check that the brakes do not pull the vehicle to one side when applied.

**Continuously Variable Transmission (CVT) P (Park) position mechanism** On a fairly steep hill, check that the vehicle is held securely with the shift lever in the P (Park) position without applying any brakes.

**Parking brake** Check the parking brake operation regularly. The vehicle should be securely held on a fairly steep hill with only the parking brake applied. If the parking brake needs adjustment, see a NISSAN dealer.

**Seats** Check seat position controls such as seat adjusters, seatback recliner, etc., to ensure they operate smoothly and all latches lock securely in every position. Check that the head restraints/headrests move up and down smoothly and the locks (if so equipped) hold securely in all latched positions.

**Seat belts** Check that all parts of the seat belt system (for example, buckles, anchors, adjusters and retractors) operate properly and smoothly, and are installed securely. Check the belt webbing for cuts, fraying, wear or damage.

**Steering wheel** Check for changes in the steering system, such as excessive freeplay, hard steering or strange noises.

**Warning lights and chimes** Make sure all warning lights and chimes are operating properly.

**Windshield wiper and washer*** Check that the wipers and washer operate properly and that the wipers do not streak.

**Windshield defroster** Check that the air comes out of the defroster outlets properly and in sufficient quantity when operating the heater or air conditioner (if so equipped).

## Under the hood and vehicle

The maintenance items listed here should be checked periodically (for example, each time you check the engine oil or refuel).

**Battery*** Check the fluid level in each cell. It should be between the MAX and MIN lines. Vehicles operated in high temperatures or under severe conditions require frequent checks of the battery fluid level.

**NOTE:**

**Care should be taken to avoid situations that can lead to potential battery discharge and potential no-start conditions such as: 1. Installation or extended use of electronic accessories that consume battery power when the engine is not running (Phone chargers, GPS, DVD players, etc.) 2. Vehicle is not driven regularly and/or only driven short distances. In these cases, the battery may need to be charged to maintain battery health.**

**Brake and clutch fluid levels*** Make sure that the brake and clutch fluid level is between the MIN and MAX lines on the reservoir.

**Engine coolant level*** Check the coolant level when the engine is cold.

**Engine drive belts*** Make sure the drive belts are not frayed, worn, cracked or oily.

**Engine oil level*** Check the level after parking the vehicle on a level surface with the engine off. Wait more than 10 minutes for the oil to drain back into the oil pan.

**Exhaust system** Make sure there are no loose supports, cracks or holes. If the sound of the exhaust seems unusual or there is a smell of exhaust fumes, immediately have the exhaust system inspected by a NISSAN dealer. See the carbon monoxide warning in the “Starting and driving” section of this manual.

**Fluid leaks** Check under the vehicle for fuel, oil, water or other fluid leaks after the vehicle has been parked for a while. Water dripping from the air conditioner (if so equipped) after use is normal. If you should notice any leaks or if gasoline fumes are evident, check for the cause and have it corrected immediately.

**Radiator and hoses** Check the front of the radiator and clean off any dirt, insects, leaves, etc., that may have accumulated. Make sure the hoses have no cracks, deformation, rot or loose connections.

**Underbody** The underbody is frequently exposed to corrosive substances such as those used on icy roads or to control dust. It is very important to remove these substances from the underbody, otherwise rust may form on the floor pan, frame, fuel lines and exhaust system. At the end of winter, the underbody should be thoroughly flushed with plain water, in those areas where mud and dirt may have accumulated. See the “Appearance and care” section of this manual.

**Windshield-washer fluid*** Check that there is adequate fluid in the reservoir.

## MAINTENANCE PRECAUTIONS

When performing any inspection or maintenance work on your vehicle, always take care to prevent serious accidental injury to yourself or damage to the vehicle. The following are general precautions which should be closely observed.

**⚠ WARNING**

- **Park the vehicle on a level surface, apply the parking brake securely and block the wheels to prevent the vehicle from moving. For manual transmission models, move the shift lever to N (Neutral). For CVT models, move the shift lever to P (Park).**
- **Be sure the ignition switch is in the OFF or LOCK position when performing any parts replacement or repairs.**
- **If you must work with the engine running, keep your hands, clothing, hair and tools away from moving fans, belts and any other moving parts.**
- **It is advisable to secure or remove any loose clothing and remove any jewelry, such as rings, watches, etc. before working on your vehicle.**
- **Always wear eye protection whenever you work on your vehicle.**
- **If you must run the engine in an enclosed space such as a garage, be sure there is proper ventilation for exhaust gases to escape.**
- **Never get under the vehicle while it is supported only by a jack. If it is necessary to work under the vehicle, support it with safety stands.**
- **Keep smoking materials, flame and sparks away from the fuel tank and battery.**
- **On gasoline engine models, the fuel filter or fuel lines should be serviced by a NISSAN dealer because the fuel lines are under high pressure even when the engine is off.**
- **Your vehicle is equipped with an automatic engine cooling fan. It may come on at any time without warning, even if the ignition key is in the OFF position and the engine is not running. To avoid injury, always disconnect the negative battery cable before working near the fan.**

**⚠ CAUTION**

- **Do not work under the hood while the engine is hot. Turn the engine off and wait until it cools down.**
- **Avoid contact with used engine oil and coolant. Improperly disposed engine oil, engine coolant and/or other vehicle fluids can damage the environment. Always conform to local regulations for disposal of vehicle fluid.**
- **Never leave the engine or the CVT related component harness connector disconnected while the ignition switch is in the ON position.**
- **Never connect or disconnect the battery or any transistorized component while the ignition switch is in the ON position.**

This “Maintenance and do-it-yourself” section gives instructions regarding only those items which are relatively easy for an owner to perform.

A genuine NISSAN service manual is also available. See “Owner’s Manual/Service Manual order information” in the “Technical and consumer information” section of this manual.

You should be aware that incomplete or improper servicing may result in operating difficulties or excessive emissions, and could affect warranty coverage. **If in doubt about any servicing, have it done by a NISSAN dealer.**

## ENGINE COMPARTMENT CHECK LOCATIONS

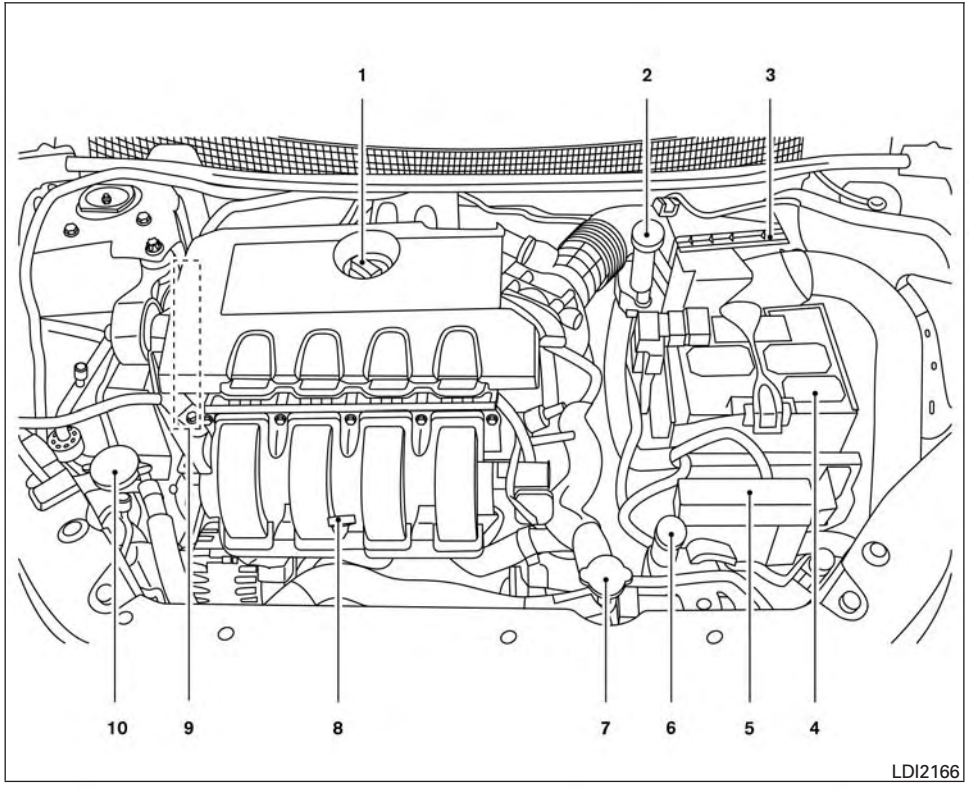


**MRA8DE engine**

1. Engine oil filler cap
2. Brake and clutch (if so equipped) fluid reservoir
3. Air cleaner
4. Battery
5. Fuse/fusible link box
6. Engine coolant reservoir
7. Radiator cap
8. Engine oil dipstick
9. Drive belt location
10. Windshield-washer fluid reservoir

## ENGINE COOLING SYSTEM

The engine cooling system is filled at the factory with a pre-diluted mixture of 50% Genuine NISSAN Long Life Antifreeze/Coolant (blue) and 50% water to provide year-round anti-freeze and coolant protection. The antifreeze solution contains rust and corrosion inhibitors. Additional engine cooling system additives are not necessary.

**⚠ WARNING**

- **Never remove the radiator or coolant reservoir cap when the engine is hot. Wait until the engine and radiator cool down. Serious burns could be caused by high pressure fluid escaping from the radiator. See precautions in "If your vehicle overheats" found in the "In case of emergency" section of this manual.**
- **The radiator is equipped with a pressure type radiator cap. To prevent engine damage, use only a genuine NISSAN radiator cap.**

**⚠ CAUTION**

- **Never use any cooling system additives such as radiator sealer. Additives may clog the cooling system and cause damage to the engine, transmission and/or cooling system.**
- **When adding or replacing coolant, be sure to use only Genuine NISSAN Long Life Antifreeze/Coolant (blue) or equivalent. Genuine NISSAN Long Life Antifreeze/Coolant (blue) is pre-diluted to provide antifreeze protection to -34° F (-37° C). If additional freeze protection is needed due to weather where you operate your vehicle, add Genuine NISSAN Long Life Antifreeze/Coolant (blue) concentrate following the directions on the container. If an equivalent coolant other than Genuine NISSAN Long Life Antifreeze/Coolant (blue) is used, follow the coolant manufacturer's instructions to maintain minimum antifreeze protection to -34° F (-37° C). The use of other types of coolant solutions other than Genuine NISSAN Long Life Antifreeze/Coolant (blue) or equivalent may damage the engine cooling system.**
- **The life expectancy of the factory-fill coolant is 105,000 miles (168,000 km) or 7 years. Mixing any other type of coolant other than Genuine NISSAN Long Life Antifreeze/Coolant (blue), including Genuine NISSAN Long Life Antifreeze/Coolant (green), or the use of non-distilled water will reduce the life expectancy of the factory-fill coolant. Refer to the NISSAN Service and Maintenance Guide for more details.**

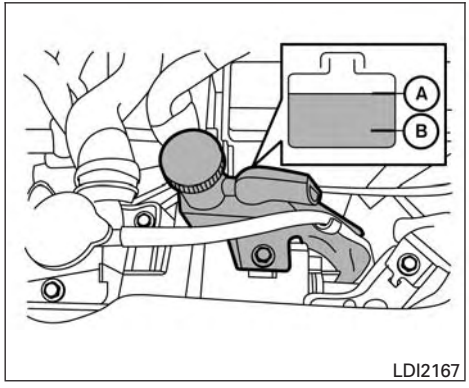


## CHECKING ENGINE COOLANT LEVEL

Check the coolant level **in the reservoir when the engine is cold.** If the coolant level is below the MIN level Ⓑ, add coolant to the MAX level Ⓐ. If the reservoir is empty, check the coolant level in the radiator **when the engine is cold.** If there is insufficient coolant in the radiator, fill the radiator with coolant up to the filler opening and also add it to the reservoir up to the MAX level Ⓐ.

This vehicle contains Genuine NISSAN Long Life Antifreeze/Coolant (blue). The life expectancy of the factory-fill coolant is 105,000 miles (168,000 km) or 7 years. Mixing any other type of coolant or the use of non-distilled water will reduce the life expectancy of the factory-fill coolant. Refer to the NISSAN Service and Maintenance Guide for more details.

**If the cooling system frequently requires coolant, have it checked by a NISSAN dealer.**

## CHANGING ENGINE COOLANT

A NISSAN dealer can change the engine coolant. The service procedure can be found in the NISSAN Service Manual.

**Improper servicing can result in reduced heater performance and engine overheating.**

**⚠ WARNING**

- **To avoid the danger of being scalded, never change the coolant when the engine is hot.**
- **Never remove the radiator cap when the engine is hot. Serious burns could be caused by high pressure fluid escaping from the radiator.**
- **Avoid direct skin contact with used coolant. If skin contact is made, wash thoroughly with soap or hand cleaner as soon as possible.**
- **Keep coolant out of the reach of children and pets.**

Engine coolant must be disposed of properly. Check your local regulations.

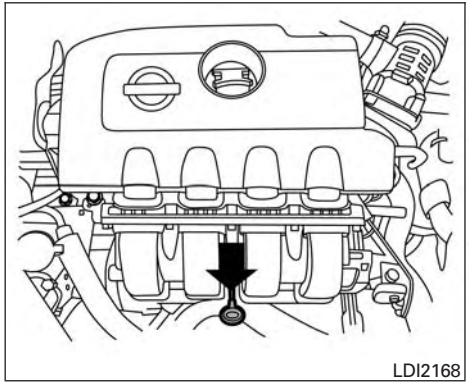
LDI2168

## CHECKING ENGINE OIL LEVEL

1. Park the vehicle on a level surface and apply the parking brake.
2. Start the engine and let it idle until it reaches operating temperature.
3. Turn off the engine. **Wait more than 10 minutes for the oil to drain back into the oil pan.**
4. Remove the dipstick and wipe it clean. Reinsert it all the way.

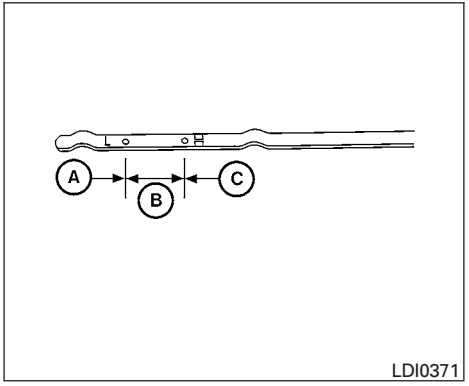

LDI0371

5. Remove the dipstick again and check the oil level. It should be between the H (High) and L (Low) marks Ⓑ. This is the normal operating oil level range. If the oil level is below the L (Low) mark Ⓐ, remove the oil filler cap and pour recommended oil through the opening. **Do not overfill Ⓒ.**
6. Recheck oil level with the dipstick.

**It is normal to add some oil between oil maintenance intervals or during the break-in period, depending on the severity of operating conditions.**

**⚠ CAUTION**

- **Oil level should be checked regularly. Operating the engine with an insufficient amount of oil can damage the engine, and such damage is not covered by warranty.**
- **It is normal to add some oil between oil maintenance intervals or during the break-in period, depending on the severity of operating conditions.**

Make sure to follow the engine oil changing intervals in the maintenance booklet. Operating under the following conditions may require more frequent oil change:

- repeated short distance driving
- driving in dusty conditions
- stop and go commuting.

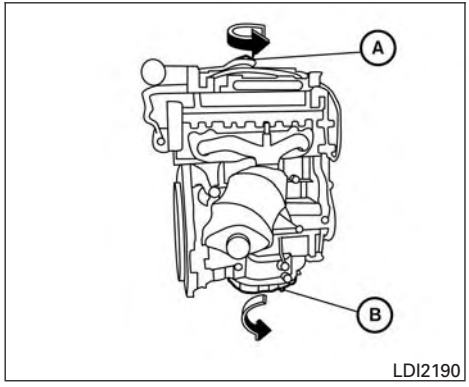


## CHANGING ENGINE OIL

1. Park the vehicle on a level surface and apply the parking brake.
2. Start the engine and let it idle until it reaches operating temperature, then turn it off.
3. Remove the oil filler cap Ⓐ by turning it counterclockwise.
4. Place a large drain pan under the drain plug Ⓑ.
5. Remove the drain plug Ⓑ with a wrench by turning it counterclockwise and completely drain the oil.

   If the oil filter is to be changed, remove and replace it at this time. See “Changing engine oil filter” in this section.

**⚠ WARNING**

- **Prolonged and repeated contact with used engine oil may cause skin cancer.**
- **Try to avoid direct skin contact with used oil. If skin contact is made, wash thoroughly with soap or hand cleaner as soon as possible.**
- **Keep used engine oil out of reach of children.**

**⚠ CAUTION**

- **Be careful not to burn yourself. The engine oil may be hot.**
- **Waste oil must be disposed of properly.**
- **Check your local regulations.**

6. Clean and reinstall the drain plug and a new washer. Securely tighten the drain plug with a wrench. Do not use excessive force.

   **Drain plug tightening torque:**
   **22 - 29 ft-lb (29 - 39 N·m)**

7. Refill engine with recommended oil through the oil filler opening, then install the oil filler cap securely.

   See “Recommended fluids/lubricants and capacities” in the “Technical and consumer information” section of this manual for drain and refill capacity.

   The drain and refill capacity depends on the oil temperature and drain time. Use these specifications for reference only. Always use the dipstick to determine when the proper amount of oil is in the engine.

8. Start the engine. Check for leakage around the drain plug and oil filter. Correct as required.
9. Turn the engine off and wait more than 10 minutes. Check the oil level with the dipstick. Add engine oil if necessary.

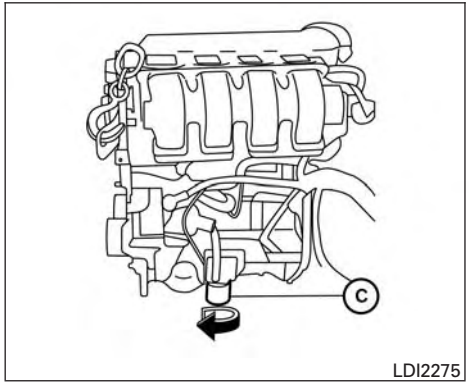

LDI2275

## CHANGING ENGINE OIL FILTER

1. Park the vehicle on a level surface and apply the parking brake.
2. Turn the engine off.
3. Place a large drain pan under the oil filter Ⓒ.
4. Loosen the oil filter with an oil filter wrench by turning it counterclockwise. Then remove the oil filter by turning it by hand.

**⚠ CAUTION**

**Be careful not to burn yourself. The engine oil may be hot.**

5. Wipe the engine oil filter sealing surface with a clean rag.

**⚠ CAUTION**

**Be sure to remove any old gasket material remaining on the sealing surface of the engine. Failure to do so could lead to engine damage.**

6. Coat the gasket on the new filter with clean engine oil.
7. Screw on the oil filter until a slight resistance is felt, then tighten an additional 2/3 turn.
8. Start the engine and check for leakage around the oil filter. Correct as required.
9. Turn the engine off and wait more than 10 minutes. Check the oil level. Add engine oil if necessary.

## CONTINUOUSLY VARIABLE TRANSMISSION (CVT) FLUID (if so equipped)

**⚠ CAUTION**

- **Use only Genuine NISSAN CVT Fluid NS-3. Do not mix with other fluids.**
- **Using transmission fluid other than Genuine NISSAN CVT Fluid NS-3 will damage the CVT, which is not covered by the warranty.**

When checking or replacement of CVT fluid is required, we recommend your NISSAN dealer for servicing.

## BRAKE AND CLUTCH (if so equipped) FLUID

For further brake and clutch fluid specification information, refer to "Recommended fluids/lubricants and capacities" in the "Technical and consumer information" section of this manual.

**⚠ WARNING**

- **Use only new fluid from a sealed container. Old, inferior or contaminated fluid may damage the brake and clutch (if so equipped) systems. The use of improper fluids can damage the brake and clutch system and affect the vehicle's stopping ability.**
- **Clean the filler cap before removing.**
- **Brake and clutch fluid is poisonous and should be stored carefully in marked containers out of reach of children.**

**⚠ CAUTION**

**Do not spill the fluid on any painted surfaces. This will damage the paint. If fluid is spilled, immediately wash the surface with water.**

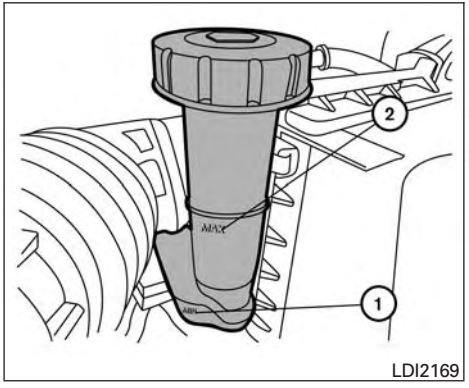

LDI2169

Check the fluid level in the reservoir. If the level is below the MIN line ①, or the brake warning light comes on, add Genuine NISSAN Brake Fluid or equivalent **DOT 3** fluid up to the MAX line ②. If fluid must be added frequently, the system should be checked by a NISSAN dealer.

## WINDSHIELD-WASHER FLUID

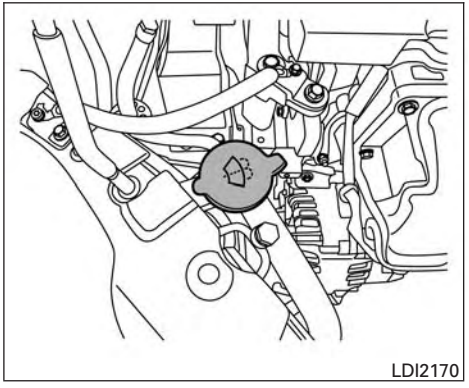
LDI2170

### WINDSHIELD-WASHER FLUID RESERVOIR

Fill the windshield-washer fluid reservoir periodically.

To fill the windshield-washer fluid reservoir, lift the cap off the reservoir and pour the windshield-washer fluid into the reservoir opening.

Add a washer solvent to the washer for better cleaning. In the winter season, add a windshield-washer antifreeze. Follow the manufacturer's instructions for the mixture ratio.

Refill the reservoir more frequently when driving conditions require an increased amount of windshield-washer fluid.

Recommended fluid is Genuine NISSAN Windshield Washer Concentrate Cleaner & Anti-freeze or equivalent.

**⚠ CAUTION**

- **Do not substitute engine anti-freeze coolant for windshield-washer fluid. This may result in damage to the paint.**
- **Do not fill the windshield-washer fluid reservoir with washer fluid concentrates at full strength. Some methyl alcohol based washer fluid concentrates may permanently stain the grille if spilled while filling the windshield-washer fluid reservoir.**
- **Pre-mix washer fluid concentrates with water to the manufacturer's recommended levels before pouring the fluid into the windshield-washer fluid reservoir. Do not use the windshield-washer reservoir to mix the washer fluid concentrate and water.**

- Keep the battery surface clean and dry. Clean the battery with a solution of baking soda and water.
- Make certain the terminal connections are clean and securely tightened.
- If the vehicle is not to be used for 30 days or longer, disconnect the negative (-) battery terminal cable to prevent discharge.

**NOTE:**

**Care should be taken to avoid situations that can lead to potential battery discharge and potential no-start conditions such as:**

1. Installation or extended use of electronic accessories that consume battery power when the engine is not running (Phone chargers, GPS, DVD players, etc.)
2. Vehicle is not driven regularly and/or only driven short distances. In these cases, the battery may need to be charged to maintain battery health.

**⚠ WARNING**

- **Do not expose the battery to flames, an electrical spark or a cigarette. Hydrogen gas generated by the battery is explosive. Explosive gases can cause blindness or injury. Do not allow battery fluid to contact your skin, eyes, fabrics or painted surfaces. Sulfuric acid can cause blindness or injury. After touching a battery or battery cap, do not touch or rub your eyes. Thoroughly wash your hands. If the acid contacts your eyes, skin or clothing, immediately flush with water for at least 15 minutes and seek medical attention.**
- **Do not operate the vehicle if the fluid in the battery is low. Low battery fluid can cause a higher load on the battery which can generate heat, reduce battery life, and in some cases lead to an explosion.**
- **When working on or near a battery, always wear suitable eye protection and remove all jewelry.**
- **Battery posts, terminals and related accessories contain lead and lead compounds. Wash hands after handling.**

- **Keep battery out of the reach of children.**
- **Do not tip the battery. Keep the vent caps tight and the battery level.**

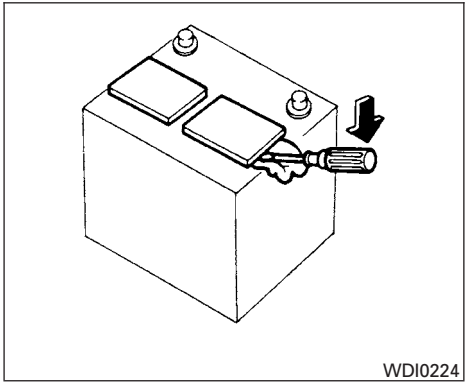


1. Remove the vent caps with a screwdriver as shown. Use a cloth to protect the battery case.

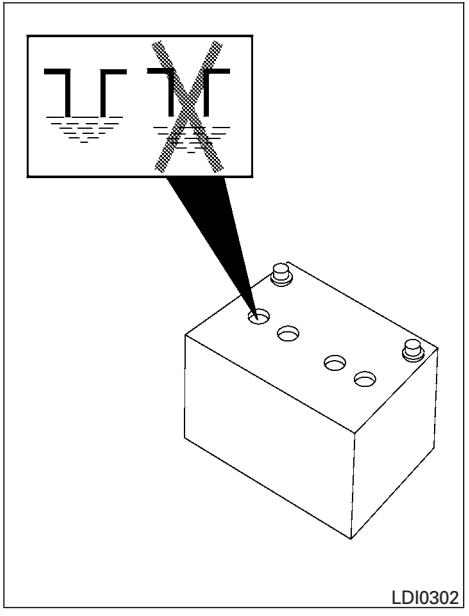


2. Check the fluid level in each cell. If it is necessary to add fluid, add only distilled water to bring the level up to the bottom of the filler opening. **Do not overfill.** Reinstall the vent caps.

Vehicles operated in high temperatures or under severe conditions require frequent checks of the battery fluid level.

## JUMP STARTING

If jump starting is necessary, see “Jump starting” in the “In case of emergency” section of this manual. If the engine does not start by jump starting, the battery may have to be replaced. Contact a NISSAN dealer.

## VARIABLE VOLTAGE CONTROL SYSTEM

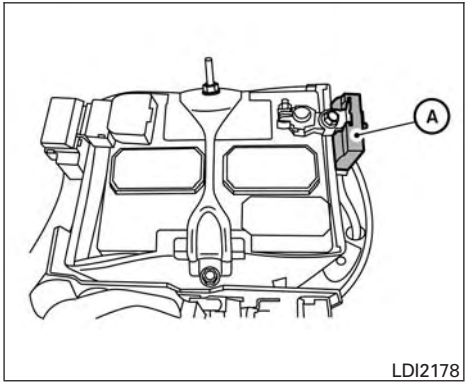

LDI2178

**⚠ CAUTION**

- **Do not ground accessories directly to the battery terminal. Doing so will bypass the variable voltage control system and the vehicle battery may not charge completely.**
- **Use electrical accessories with the engine running to avoid discharging the vehicle battery.**

Your vehicle is equipped with a variable voltage control system. This system measures the amount of electrical discharge from the battery and controls voltage generated by the generator.

The current sensor Ⓐ is located near the battery along the negative battery cable. If you add electrical accessories to your vehicle, be sure to ground them to a suitable body ground such as the frame or engine block area.

## DRIVE BELT

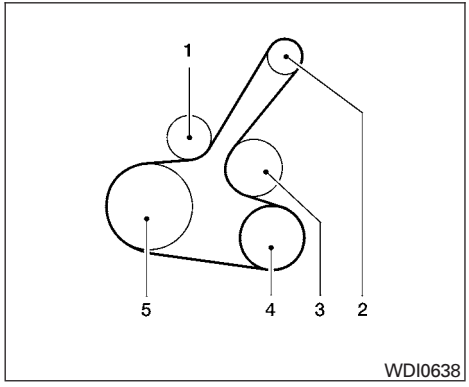


1. Automatic tensioner
2. Generator
3. Water pump
4. Air conditioner compressor
5. Crankshaft pully

**⚠ WARNING**

**Be sure the ignition switch is in the OFF or LOCK position before servicing drive belt. The engine could rotate unexpectedly.**

1. Visually inspect the belt for signs of unusual wear, cuts, or fraying. If the belt is in poor condition, have it replaced or adjusted by a NISSAN dealer.
2. Have the belt checked regularly for condition.

## SPARK PLUGS

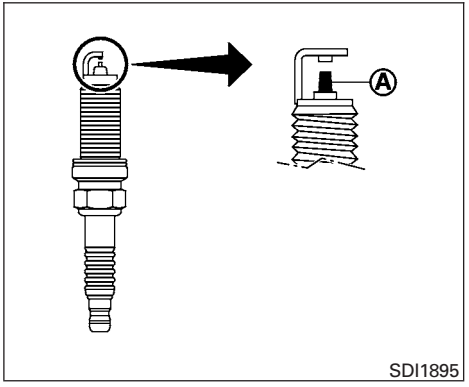


### REPLACING SPARK PLUGS

**⚠ WARNING**

**Be sure the engine and ignition switch are off and that the parking brake is engaged securely.**

**⚠ CAUTION**

**Be sure to use the correct socket to remove the spark plugs. An incorrect socket can damage the spark plugs.**

### Platinum-tipped spark plugs (except California models)

It is not necessary to replace platinum-tipped Ⓐ spark plugs as frequently as conventional type spark plugs because they last much longer. Follow the maintenance log shown in the "NISSAN Service and Maintenance Guide". Do not service platinum-tipped spark plugs by cleaning or regapping.

- **Always replace spark plugs with recommended or equivalent ones.**

If replacement is required, see your NISSAN dealer for assistance.

### Iridium-tipped spark plugs (California models only)

It is not necessary to replace iridium-tipped Ⓐ spark plugs as frequently as conventional type spark plugs because they last much longer. Follow the maintenance log shown in the "NISSAN Service and Maintenance Guide". Do not service iridium-tipped spark plugs by cleaning or regapping.

- **Always replace spark plugs with recommended or equivalent ones.**

If replacement is required, see your NISSAN dealer for assistance.

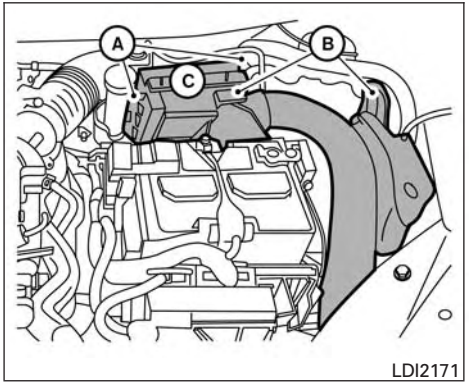


The air cleaner filter should not be cleaned and reused. Replace it according to the maintenance log shown in the "NISSAN Service and Maintenance Guide."

To remove the air cleaner filter:

1. Unlatch the retaining clips Ⓐ.
2. Pull up at points Ⓑ and remove.
3. Pull up and remove air cleaner housing Ⓒ.
4. Remove the air cleaner filter, Wipe the inside of the air cleaner filter housing and the cover with a damp cloth, then replace air cleaner filter.

**NOTE:**

**After installing a new air cleaner, make sure the air cleaner cover is seated in the housing and latch the clips.**

**⚠ WARNING**

- **Operating the engine with the air cleaner removed can cause you or others to be burned. The air cleaner not only cleans the air, it stops the flame if the engine backfires. If it isn't there, and the engine backfires, you could be burned. Do not drive with the air cleaner removed, and be careful when working on the engine with the air cleaner removed.**
- **Never pour fuel into the throttle body or attempt to start the engine with the air cleaner removed. Doing so could result in serious injury.**

## IN-CABIN MICROFILTER

The in-cabin microfilter restricts the entry of airborne dust and pollen particles and reduces some objectionable outside odors. The filter is located behind the trim panel near the accelerator pedal. Refer to the “NISSAN Service and Maintenance Guide” for change intervals.

If replacement is required, see your NISSAN dealer.

## CLEANING

If your windshield is not clear after using the windshield washer or if a wiper blade chatters when running, wax or other material may be on the blade or windshield.

Clean the outside of the windshield with a washer fluid or a mild detergent. Your windshield is clean if beads do not form when rinsing with clear water.

Clean each blade by wiping it with a cloth soaked in a washer fluid or a mild detergent. Then rinse the blades with clear water. If your windshield is still not clear after cleaning the blades and using the wiper, install new windshield wiper blades.

**⚠ CAUTION**

**Worn windshield wiper blades can damage the windshield and impair driver vision.**

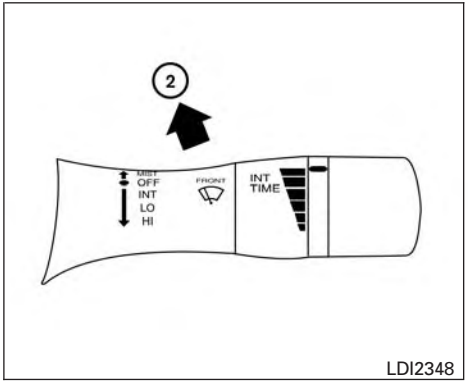


**Type A**

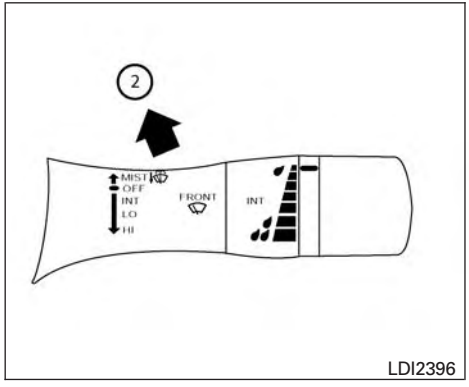


**Type B**

## REPLACING

Replace the wiper blades if they are worn.

To replace the windshield wiper blades, follow the procedure below:

1. When ignition switch is ON or within 60 seconds after placing the ignition switch from ON to OFF position.
2. Quickly push the windshield wiper and washer lever to the mist position twice ② within 0.5 seconds. This action will cause the wipers to take the service position automatically.
3. Lift the wiper arm away from the windshield.

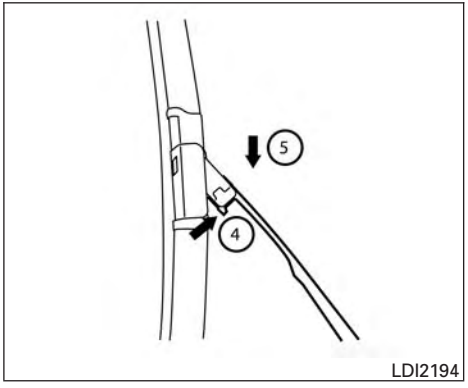

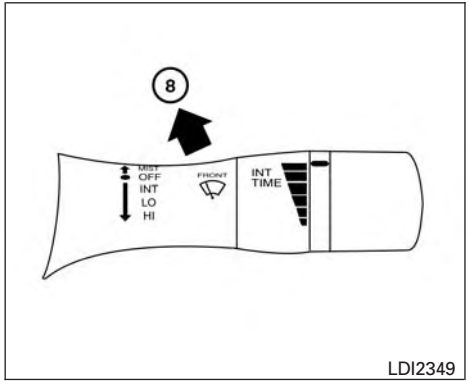


**Type A**

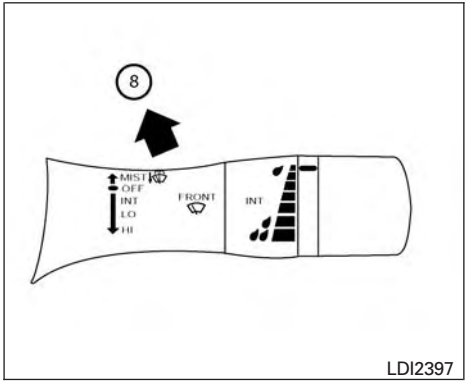


**Type B**

4. Push the release tab ④.
5. Move the wiper blade down ⑤ and remove.
6. Insert the new wiper blade onto the wiper arm until it clicks into place.
7. Rotate the wiper blade so the dimple is in the groove.
8. Finally, push the windshield wiper and washer lever to the mist position ⑧. This action will cause the wipers to resume the set position.

**⚠ CAUTION**

- **After wiper blade replacement, return the wiper arm to its original position; otherwise it may be damaged when the hood is opened.**
- **Make sure the wiper blades contact the glass; otherwise the arms may be damaged from wind pressure.**

If the brakes do not operate properly, have the brakes checked by a NISSAN dealer.

## Self-adjusting brakes

Your vehicle is equipped with self-adjusting brakes.

The front (and rear– if so equipped) disc-type brakes self-adjust every time the brake pedal is applied. The rear drum-type brakes (if so equipped) self-adjust every time the parking brake is applied.

**⚠WARNING**

**See a NISSAN dealer for a brake system check if the brake pedal height does not return to normal.**

## Brake pad wear indicators

The disc brake pads on your vehicle have audible wear indicators. When a brake pad requires replacement, a high pitched scraping or screeching sound will be heard when the vehicle is in motion. The noise will be heard whether or not the brake pedal is depressed. Have the brakes checked as soon as possible if the wear indicator sound is heard.

Under some driving or climate conditions, occasional brake squeak, squeal or other noise may be heard. Occasional brake noise during light to moderate stops is normal and does not affect the function or performance of the brake system.

**Proper brake inspection intervals should be followed.** For more information regarding brake inspections, see the appropriate maintenance schedule information in the “NISSAN Service and Maintenance Guide”.



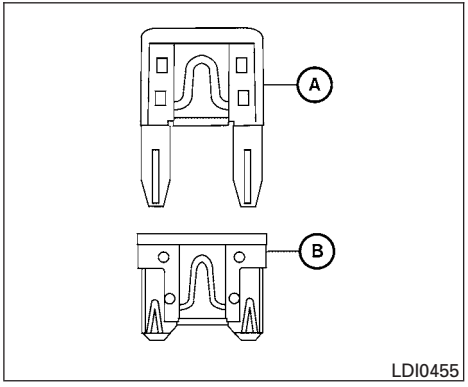


Two types of fuses are used. Type Ⓐ is used in the fuse boxes in the engine compartment. Type Ⓑ is used in the passenger compartment fuse box.

Type A fuses are provided as spare fuses. They are stored in the passenger compartment fuse box.

Type A fuses can be installed in the engine compartment and passenger compartment fuse boxes.

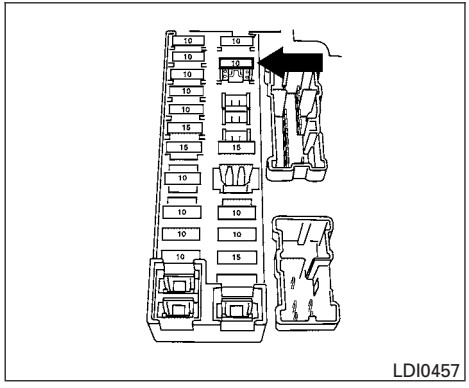


If a type A fuse is used to replace a type B fuse, the type A fuse will not be level with the fuse pocket as shown in the illustration. This will not affect the performance of the fuse. Make sure the fuse is installed in the fuse box securely.

Type B fuses cannot be installed in the underhood fuse boxes. Only use type A fuses in the underhood fuse boxes.

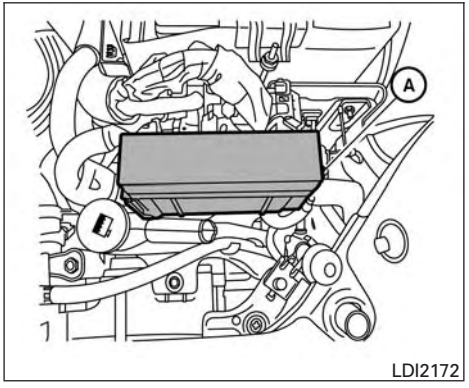


## ENGINE COMPARTMENT

**⚠ CAUTION**

**Never use a fuse of a higher or lower amperage rating than specified on the fuse box cover. This could damage the electrical system or cause a fire.**

If any electrical equipment does not come on, check for an open fuse.

1. Be sure the ignition switch and the headlight switch are OFF.
2. Open the engine hood.
3. Remove the fuse box cover by pushing the tab Ⓐ and lifting the cover up.
4. Remove the fuse with the fuse puller, which is located in the center of the fuse block in the passenger compartment.

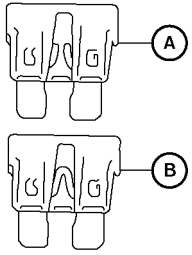


WDI0452

5. If the fuse is open Ⓐ, replace it with a new fuse Ⓑ.
6. If a new fuse also opens, have the electrical system checked and repaired by a NISSAN dealer.

## Fusible links

If the electrical equipment does not operate and fuses are in good condition, check the fusible links. If any of these fusible links are melted, replace with only Genuine NISSAN parts.

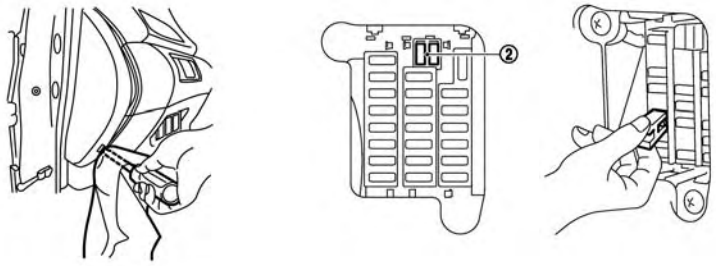


LDI2174

## PASSENGER COMPARTMENT

**⚠CAUTION**

**Never use a fuse of a higher or lower amperage rating than specified on the fuse box cover. This could damage the electrical system or cause a fire.**

If any electrical equipment does not operate, check for an open fuse.

**NOTE:**

**The fuse box is located on the driver's side of the instrument panel.**

1. Be sure the ignition switch and the headlight switch are OFF.
2. Remove the fuse box cover with a suitable tool. Use a cloth to avoid damaging the trim.
3. Locate the fuse that needs to be replaced.
4. Remove the fuse with the fuse puller ②.

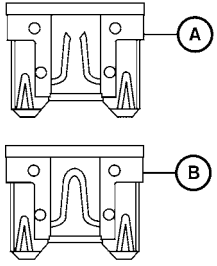


LDI0456

5. If the fuse is open Ⓐ, replace it with an equivalent good fuse Ⓑ.
6. Push the fuse box cover to install.

If a new fuse also opens, have the electrical system checked and repaired by a NISSAN dealer.

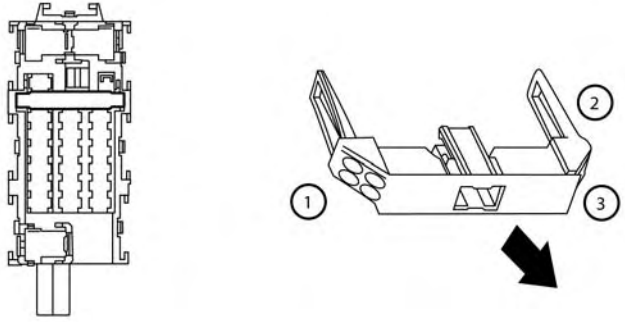


LDI2175

## Extended storage switch

If any electrical equipment does not operate, remove the extended storage switch and check for an open fuse.

**NOTE:**

**The extended storage switch is used for long term vehicle storage. Even if the extended storage switch is broken it is not necessary to replace it. Replace only the open fuse in the switch with a new fuse.**

How to replace the extended storage switch:

1. To remove the extended storage switch, be sure the ignition switch is in the OFF or LOCK position.
2. Be sure the headlight switch is in the OFF position.
3. Remove the fuse box cover.
4. Pinch the locking tabs ① and ② found on each side of the storage switch.
5. Pull the storage switch straight out from the fuse box ③.

**⚠ CAUTION**

**Be careful not to allow children to swallow the battery or removed parts.**

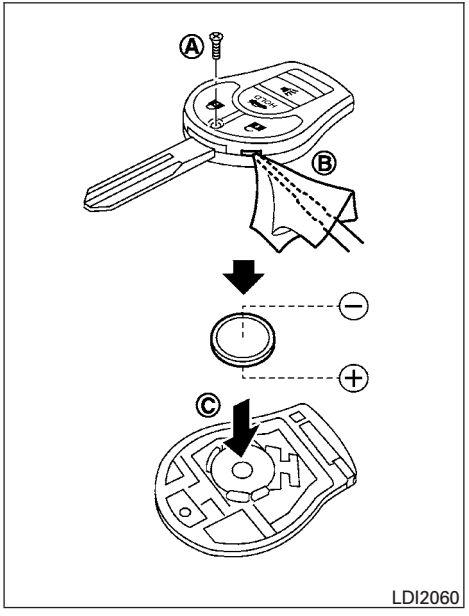


KEYFOB (if so equipped)

Replace the battery in the keyfob as follows:

1. Remove the screw Ⓐ.
2. Insert a small screwdriver into the slit of the corner Ⓑ and twist it to separate the upper part from the lower part. Use a cloth to protect the casing.
3. Replace the battery with a new one.
   - Do not touch the internal circuit and electric terminals as doing so could cause a malfunction.
   - Make sure that the + side faces the bottom of the case Ⓒ.

Recommended battery: CR1620 or equivalent.

4. Close the lid and install the screw securely.
5. Operate the buttons to check its operation.

See a NISSAN dealer if you need assistance for replacement.

**If the battery is removed for any reason other than replacement, perform step 5.**

- **An improperly disposed battery can hurt the environment. Always confirm local regulations for battery disposal.**
- **The keyfob is water-resistant; however, if it does get wet, immediately wipe completely dry.**

- **The operational range of the keyfob extends to approximately 33 ft (10 m) from the vehicle. This range may vary with conditions.**

**Operation is subject to the following two conditions: (1) This device may not cause harmful interference, and (2) this device must accept any interference received, including interference that may cause undesired operation of the device.**

**FCC Notice:**

**For USA:**
**This device complies with Part 15 of the FCC Rules. Operation is subject to the following two conditions: (1) This device may not cause harmful interference, and (2) this device must accept any interference received, including interference that may cause undesired operation.**

**Note:**
**Changes or modifications not expressly approved by the party responsible for compliance could void the user's authority to operate the equipment.**

**For Canada:**
**This device complies with RSS-210 of Industry Canada. Operation is subject to the following two conditions: (1) this device may not cause interference, and (2) this device must accept any interference, including interference that may cause undesired operation of the device.**

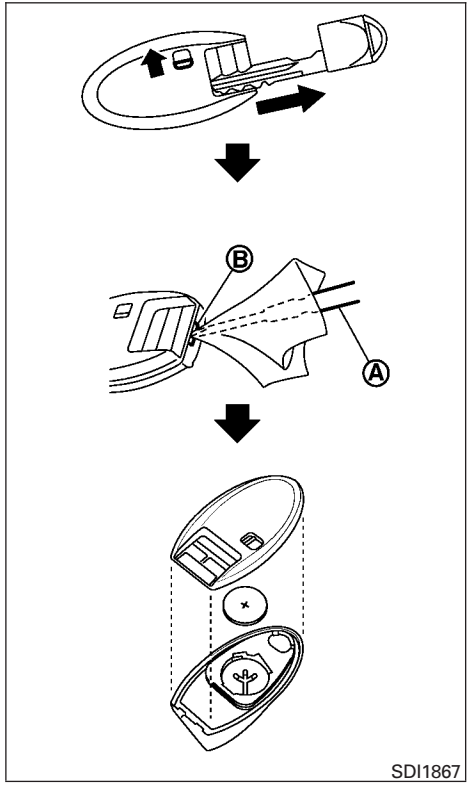

SDI1867

## NISSAN INTELLIGENT KEY® (if so equipped)

Replace the battery in the Intelligent Key as follows:

1. Remove the mechanical key from the Intelligent Key.
2. Insert a small screwdriver Ⓐ into the slit Ⓑ of the corner and twist it to separate the upper part from the lower part. Use a cloth to protect the casing.
3. Replace the battery with a new one.

   Recommended battery: CR2025 or equivalent.

   - Do not touch the internal circuit and electric terminals as doing so could cause a malfunction.
   - Hold the battery by the edges. Holding the battery across the contact points will seriously deplete the storage capacity.
   - Make sure that the + side faces the bottom of the case.

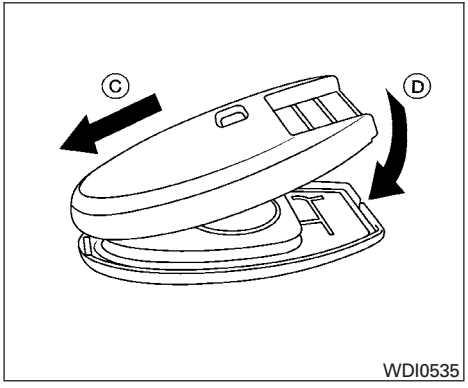


4. Close the lid securely as illustrated Ⓒ Ⓓ.
5. Operate the buttons to check the operation.

See a NISSAN dealer if you need assistance for replacement.

**FCC Notice:**

**For USA:**
**This device complies with Part 15 of the FCC Rules. Operation is subject to the following two conditions: (1) This device may not cause harmful interference, and (2) this device must accept any interference received, including interference that may cause undesired operation.**

**Note:**
**Changes or modifications not expressly approved by the party responsible for compliance could void the user's authority to operate the equipment.**

**For Canada:**
**This device complies with RSS-210 of Industry Canada. Operation is subject to the following two conditions: (1) this device may not cause interference, and (2) this device must accept any interference, including interference that may cause undesired operation of the device.**

## HEADLIGHTS

### Replacing the halogen headlight bulb

The headlight is a semi-sealed beam type which uses a replaceable headlight (halogen) bulb. Because the headlight assembly must be removed from the vehicle for bulb replacement, see your NISSAN dealer.

**⚠ CAUTION**

- **Aiming is not necessary after replacing the bulb. When aiming adjustment is necessary, contact a NISSAN dealer.**
- **Do not leave the headlight assembly open without a bulb installed for a long period of time. Dust, moisture, smoke, etc. entering the headlight body may affect bulb performance. Remove the bulb from the headlight assembly just before a replacement bulb is installed.**
- **Only touch the base when handling the bulb. Never touch the glass envelope. Touching the glass could significantly affect bulb life and/or headlight performance.**
- **High pressure halogen gas is sealed inside the halogen bulb. The bulb may break if the glass envelope is scratched or the bulb is dropped.**
- **Use the same number and wattage as shown in the chart.**

Fog may temporarily form inside the lens of the exterior lights in the rain or in a car wash. A temperature difference between the inside and the outside of the lens causes the fog. This is not a malfunction. If large drops of water collect inside the lens, contact a NISSAN dealer.

## FOG LIGHTS (if so equipped)

### Replacing the fog light bulb

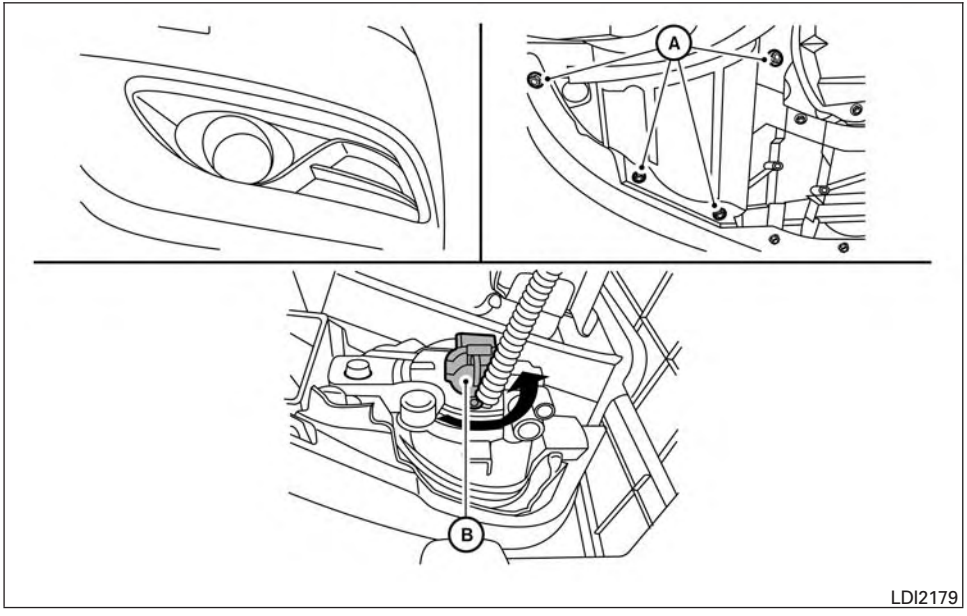


1. Disconnect the negative battery cable.
2. Remove the fasteners Ⓐ; carefully pull back the front fender protector .
3. Rotate the bulb Ⓑ counterclockwise and pull out to remove.

## EXTERIOR AND INTERIOR LIGHTS

| Item | Wattage (W) | Bulb No.* |
|---|---|---|
| Headlight assembly* | | |
| Low | 55 | H11 |
| High | 65 | H9 |
| Turn | 28 | WY28/8W |
| Park | — | — |
| Side marker | 3.8 | 194 |
| Front fog light* (if so equipped) | 55 | H11 |
| Front map lights* | — | — |
| Room light | 8 | AL19 |
| Trunk light | 3.4 | 158 |
| High-mounted stop light* | | |
| Inside | — | — |
| Spoiler (if so equipped) | — | — |
| Rear combination light* | | |
| Turn signal light | 21 | WY21W |
| Stop/Tail | — | — |
| Backup (reversing) | 16 | W16W |
| Rear side marker | — | — |
| License plate light* | 5 | W5W |

* Always check with the Parts Department at a NISSAN dealer for the latest parts information.

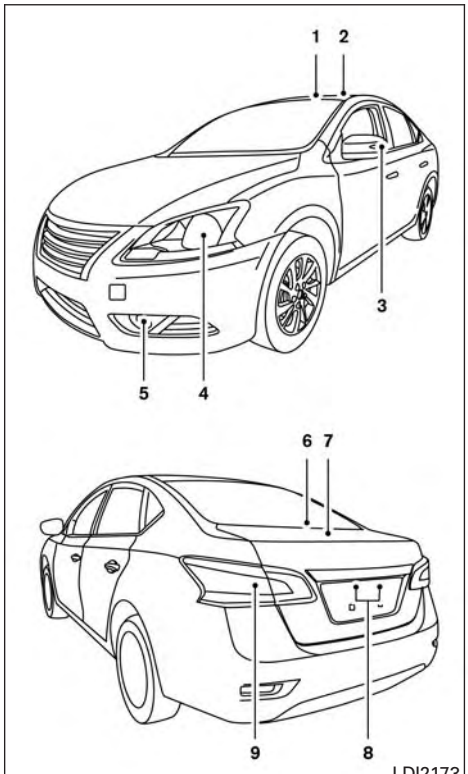

1. Map light
2. Interior light
3. Door mirror turn signal light
4. Headlight assembly
5. Fog light (if so equipped)
6. High-mount stop light
7. Trunk light
8. License plate light
9. Rear combination light

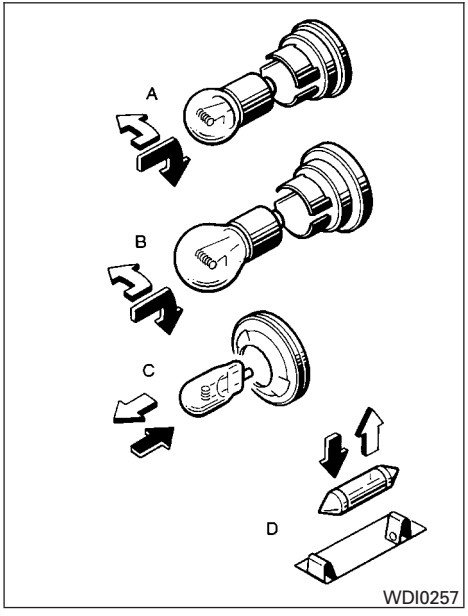


⇧ Indicates bulb removal
⬆ Indicates bulb replacement

## Replacement procedures

All other lights are either type A, B, C or D. When replacing a bulb, first remove the lens and/or cover.

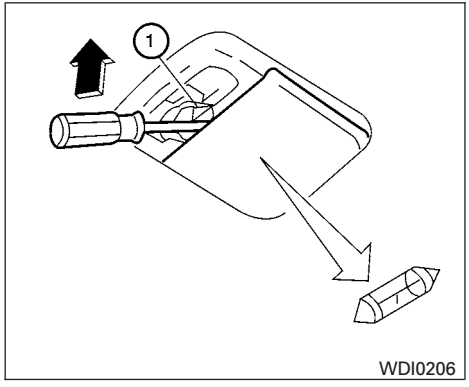


**Interior light**

Use a cloth ① to protect the interior light housing.

**If you have a flat tire, see "Flat tire" in the "In case of emergency" section of this manual.**

## TIRE PRESSURE

### Tire Pressure Monitoring System (TPMS)

This vehicle is equipped with the Tire Pressure Monitoring System (TPMS). It monitors tire pressure of all tires except the spare. When the low tire pressure warning light is lit and the CHECK TIRE PRES warning is displayed in the odometer, one or more of your tires is significantly under-inflated.

The TPMS will activate only when the vehicle is driven at speeds above 16 MPH (25 km/h). Also, this system may not detect a sudden drop in tire pressure (for example a flat tire while driving).

For more details, refer to "Low tire pressure warning light" in the "Instruments and controls" section, "Tire Pressure Monitoring System (TPMS)" in the "Starting and driving" section, and "Flat tire" in the "In case of emergency" section.

### Tire inflation pressure

Check the tire pressures (including the spare) often and always prior to long distance trips. The recommended tire pressure specifications are shown on the F.M.V.S.S./C.M.V.S.S. certification label or the Tire and Loading Information label under the "Cold Tire Pressure" heading. The Tire and Loading Information label is affixed to the driver side center pillar. Tire pressures should be checked regularly because:

- Most tires naturally lose air over time.
- Tires can lose air suddenly when driven over potholes or other objects or if the vehicle strikes a curb while parking.

The tire pressures should be checked when the tires are cold. The tires are considered COLD after the vehicle has been parked for 3 or more hours, or driven less than 1 mile (1.6 km) at moderate speeds.

The “TPMS with Easy Fill Tire Alert” provides visual and audible signals outside the vehicle for inflating tires to the recommended COLD tire pressure. For more information, see “TPMS with Easy Fill Tire Alert” in the “Starting and driving” section.

**Incorrect tire pressure, including under inflation, may adversely affect tire life and vehicle handling.**

**⚠WARNING**

- **Improperly inflated tires can fail suddenly and cause an accident.**
- **The Gross Vehicle Weight Rating (GVWR) is located on the F.M.V.S.S./C.M.V.S.S. certification label. The vehicle weight capacity is indicated on the Tire and Loading Information label. Do not load your vehicle beyond this capacity. Overloading your vehicle may result in reduced tire life, unsafe operating conditions due to premature tire failure, or unfavorable handling characteristics and could also lead to a serious accident. Loading beyond the specified capacity may also result in failure of other vehicle components.**
- **Before taking a long trip, or whenever you heavily load your vehicle, use a tire pressure gauge to ensure that the tire pressures are at the specified level.**
- **For additional information regarding tires, refer to “Important Tire Safety Information” (US) or “Tire Safety Information” (Canada) in the Warranty Information Booklet.**

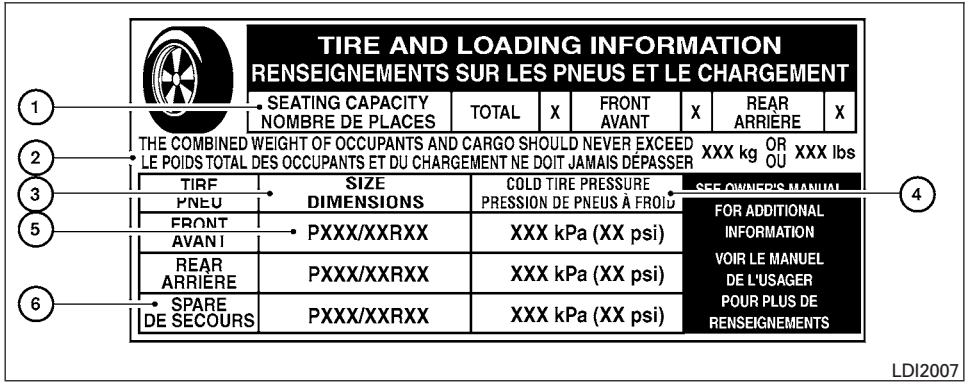


Tire and loading information label

① Seating capacity: The maximum number of occupants that can be seated in the vehicle.

② Vehicle load limit: See “Vehicle loading information” in the “Technical and consumer information” section.

③ Original tire size: The size of the tires originally installed on the vehicle at the factory.

④ Cold tire pressure: Inflate the tires to this pressure when the tires are cold. Tires are considered COLD after the vehicle has been parked for 3 or more hours, or driven less than 1 mile (1.6 km) at moderate speeds. The recommended cold tire inflation is set by the manufacturer to provide the best balance of tire wear, vehicle handling, driveability, tire noise, etc., up to the vehicle’s GVWR.

⑤ Tire size – refer to “Tire labeling” in this section.

⑥ Spare tire size.

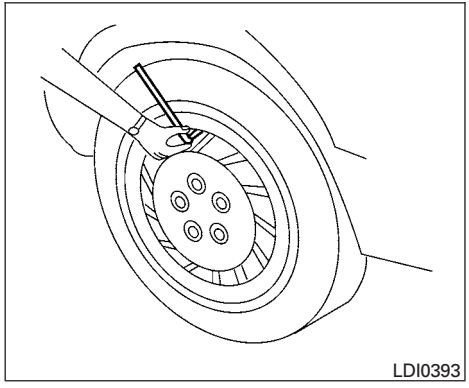


Checking tire pressure

1. Remove the valve stem cap from the tire.
2. Press the pressure gauge squarely onto the valve stem. Do not press too hard or force the valve stem sideways, or air will escape. If the hissing sound of air escaping from the tire is heard while checking the pressure, reposition the gauge to eliminate this leakage.
3. Remove the gauge.
4. Read the tire pressure on the gauge stem and compare to the specification shown on the Tire and Loading Information label.
5. Add air to the tire as needed. If too much air is added, press the core of the valve stem briefly with the tip of the gauge stem to release pressure. Recheck the pressure and add or release air as needed.
6. Install the valve stem cap.
7. Check the pressure of all other tires, including the spare.

| Grades: S, SV, SR,SL | |
|---|---|
| Size | Cold Tire Inflation Pressure |
| Front Original Tire: P205/50R17 P205/55R16 | 240 kPa, 35 PSI |
| Rear Original Tire: P205/50R17 P205/55R16 | 240 kPa, 35 PSI |
| Spare Tire: T125/70D16 | 420 kPa, 60 PSI |
| Grades: FE + S, FE +SV | |
| Size | Cold Tire Inflation Pressure |
| Front Original Tire: P205/55R16 | 250 kPa, 36 PSI |
| Rear Original Tire: P205/55R16 | 250 kPa, 36 PSI |
| Spare Tire: T125/70D16 | 420 kPa, 60 PSI |

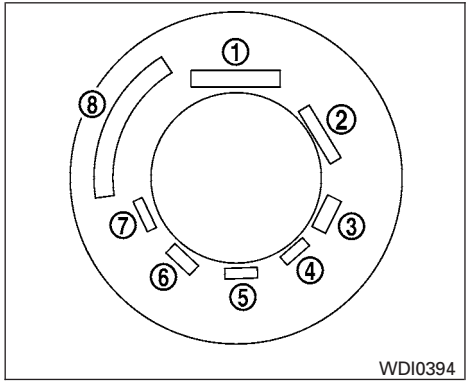


**Example**

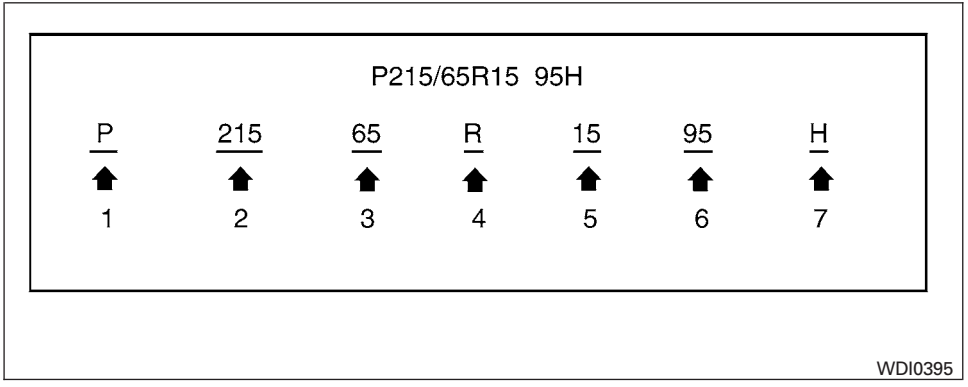


**Example**

## TIRE LABELING

Federal law requires tire manufacturers to place standardized information on the sidewall of all tires. This information identifies and describes the fundamental characteristics of the tire and also provides the tire identification number (TIN) for safety standard certification. The TIN can be used to identify the tire in case of a recall.

① Tire size (example: P215/65R15 95H)

1. P: The “P” indicates the tire is designed for passenger vehicles (not all tires have this information).
2. Three-digit number (215): This number gives the width in millimeters of the tire from sidewall edge to sidewall edge.
3. Two-digit number (65): This number, known as the aspect ratio, gives the tire’s ratio of height to width.
4. R: The “R” stands for radial.
5. Two-digit number (15): This number is the wheel or rim diameter in inches.
6. Two- or three-digit number (95): This number is the tire’s load index. It is a measurement of how much weight each tire can support. You may not find this information on all tires because it is not required by law.
7. H: Tire speed rating. You should not drive the vehicle faster than the tire speed rating.

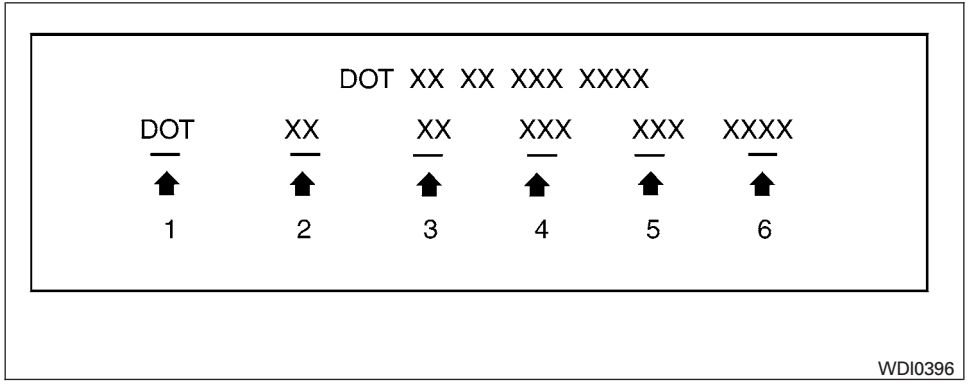


**Example**

② TIN (Tire Identification Number) for a new tire (example: DOT XX XX XXX XXXX)

1. DOT: Abbreviation for the “Department Of Transportation”. The symbol can be placed above, below or to the left or right of the Tire Identification Number.
2. Two-digit code: Manufacturer’s identification mark.
3. Two-digit code: Tire size.
4. Three-digit code: Tire type code (Optional).
5. Three-digit code: Date of Manufacture.
6. Four numbers represent the week and year the tire was built. For example, the numbers 3103 means the 31st week of 2003. If these numbers are missing then look on the other sidewall of the tire.

③ Tire ply composition and material

The number of layers or plies of rubber-coated fabric in the tire. Tire manufacturers also must indicate the materials in the tire, which include steel, nylon, polyester and others.

④ Maximum permissible inflation pressure

This number is the greatest amount of air pressure that should be put in the tire. Do not exceed the maximum permissible inflation pressure.

⑤ Maximum load rating

This number indicates the maximum load in kilograms and pounds that can be carried by the tire. When replacing the tires on the vehicle, always use a tire that has the same load rating as the factory installed tire.

⑥ Term of “tubeless” or “tube type”

Indicates whether the tire requires an inner tube (“tube type”) or not (“tubeless”).

⑦ The word “radial”

The word “radial” is shown if the tire has radial structure.

⑧ Manufacturer or brand name

Manufacturer or brand name is shown.

**Other Tire-related Terminology**

In addition to the many terms that are defined throughout this section, Intended Outboard Sidewall is (1) the sidewall that contains a whitewall, bears white lettering or bears manufacturer, brand, and/or model name molding that is higher or deeper than the same molding on the other sidewall of the tire, or (2) the outward facing sidewall of an asymmetrical tire that has a particular side that must always face outward when mounted on a vehicle.

## TYPES OF TIRES

**⚠ WARNING**

- **When changing or replacing tires, be sure all four tires are of the same type (i.e., Summer, All Season or Snow) and construction. A NISSAN dealer may be able to help you with information about tire type, size, speed rating and availability.**
- **Replacement tires may have a lower speed rating than the factory equipped tires, and may not match the potential maximum vehicle speed. Never exceed the maximum speed rating of the tire.**
- **For additional information regarding tires, refer to “Important Tire Safety Information” (US) or “Tire Safety Information” (Canada) in the Warranty Information Booklet.**

### All season tires

NISSAN specifies All Season tires on some models to provide good performance all year, including snowy and icy road conditions. All Season tires are identified by ALL SEASON and/or M&S on the tire sidewall. Snow tires have better snow traction than All Season tires and may be more appropriate in some areas.

### Summer tires

NISSAN specifies summer tires on some models to provide superior performance on dry roads. Summer tire performance is substantially reduced in snow and ice. Summer tires do not have the tire traction rating “M&S” on the tire sidewall.

If you plan to operate your vehicle in snowy or icy conditions, NISSAN recommends the use of SNOW tires or ALL SEASON tires on all four wheels.

### Snow tires

If snow tires are needed, it is necessary to select tires equivalent in size and load rating to the original equipment tires. If you do not, it can adversely affect the safety and handling of your vehicle.

Generally, snow tires have lower speed ratings than factory equipped tires and may not match the potential maximum vehicle speed. Never exceed the maximum speed rating of the tire.

If you install snow tires, they must be the same size, brand, construction and tread pattern on all four wheels.

For additional traction on icy roads, studded tires may be used. However, some U.S. states and Canadian provinces prohibit their use. Check local, state and provincial laws before installing studded tires. Skid and traction capabilities of studded snow tires on wet or dry surfaces may be poorer than that of non-studded snow tires.

## TIRE CHAINS

**⚠ CAUTION**

**Tire chains/cables should not be installed on P205/50R17 size tires. Installation of the tire chains/cables on P205/50R17 size tires will cause damage to the vehicle. If you plan to use tire chains/cables, you should install P205/55R16 size tires on your vehicle.**

Use of tire chains may be prohibited according to location. Check the local laws before installing tire chains. When installing tire chains, make sure they are the proper size for the tires on your vehicle and are installed according to the chain manufacturer's suggestions. **Use only SAE class "S" chains.** Class "S" chains are used on vehicles with restricted tire to vehicle clearance. Vehicles that can use Class "S" chains are designed to meet the minimum clearances between the tire and the closest vehicle suspension or body component required to accommodate the use of a winter traction device (tire chains or cables). The minimum clearances are determined using the factory equipped tires. Other types may damage your vehicle. Use chain tensioners when recommended by the tire chain manufacturer to ensure a tight fit. Loose end links of the tire chain must be secured or removed to prevent the possibility of whipping action damage to the fenders or underbody. If possible, avoid fully loading your vehicle when using tire chains. In addition, drive at a reduced speed. Otherwise, your vehicle may be damaged and/or vehicle handling and performance may be adversely affected.

**Tire chains must be installed only on the front wheels and not on the rear wheels.**

Never install tire chains on a TEMPORARY USE ONLY spare tire.

Do not use tire chains on dry roads. Driving with chains in such conditions can cause damage to the various mechanisms of the vehicle due to some overstress.

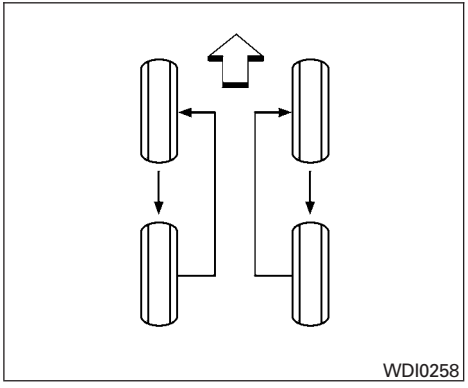


## CHANGING WHEELS AND TIRES

### Tire rotation

NISSAN recommends rotating the tires every 7,500 miles (12,000 km).

See "Flat tire" in the "In case of emergency" section of this manual for tire replacing procedures.

**As soon as possible, tighten the wheel nuts to the specified torque with a torque wrench.**

**Wheel nut tightening torque:**
**83 ft-lb (113 N·m)**

**The wheel nuts must be kept tightened to specifications at all times. It is recommended that wheel nuts be tightened to specification at each tire rotation interval.**

**⚠WARNING**

- **After rotating the tires, check and adjust the tire pressure.**
- **Retighten the wheel nuts when the vehicle has been driven for 600 miles (1,000 km) (also in cases of a flat tire, etc.).**
- **Do not include the spare tire in the tire rotation.**
- **For additional information regarding tires, refer to "Important Tire Safety Information" (US) or "Tire Safety Information" (Canada) in the Warranty Information Booklet.**

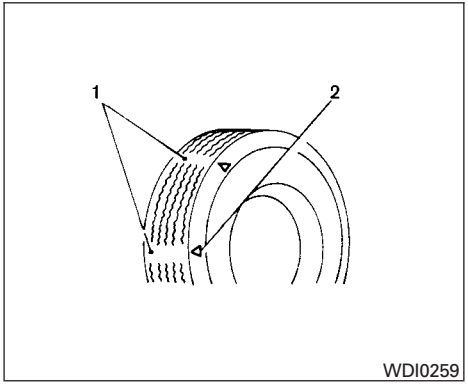


1. Wear indicator
2. Location mark

Tire wear and damage

**⚠WARNING**

- **Tires should be periodically inspected for wear, cracking, bulging or objects caught in the tread. If excessive wear, cracks, bulging or deep cuts are found, the tire(s) should be replaced.**
- **The original tires have built-in tread wear indicators. When the wear indicators are visible, the tire(s) should be replaced.**
- **Tires degrade with age and use. Have tires, including the spare, over 6 years old checked by a qualified technician because some tire damage may not be obvious. Replace the tires as necessary to prevent tire failure and possible personal injury.**
- **Improper service of the spare tire may result in serious personal injury. If it is necessary to repair the spare tire, contact a NISSAN dealer.**
- **For additional information regarding tires, refer to "Important Tire Safety Information" (US) or "Tire Safety Information" (Canada) in the Warranty Information Booklet.**

## Replacing wheels and tires

When replacing a tire, use the same size, tread design, speed rating and load carrying capacity as originally equipped. Recommended types and sizes are shown in “Wheels and tires” in the “Technical and consumer information” section of this manual.

**⚠ WARNING**

- **The use of tires other than those recommended or the mixed use of tires of different brands, construction (bias, bias-belted or radial), or tread patterns can adversely affect the ride, braking, handling, VDC system, ground clearance, body-to-tire clearance, tire chain clearance, speedometer calibration, headlight aim and bumper height. Some of these effects may lead to accidents and could result in serious personal injury.**
- **If your vehicle was originally equipped with 4 tires that were the same size and you are only replacing 2 of the 4 tires, install the new tires on the rear axle. Placing new tires on the front axle may cause loss of vehicle control in some driving conditions and cause an accident and personal injury.**
- **If the wheels are changed for any reason, always replace with wheels which have the same off-set dimension. Wheels of a different off-set could cause premature tire wear, degrade vehicle handling characteristics, affect the VDC system and/or interference with the brake discs/drums. Such interference can lead to decreased braking efficiency and/or early brake pad/shoe wear. Refer to “Wheels and tires” in the “Technical and consumer information” section of this manual for wheel off-set dimensions.**
- **When a spare tire is mounted or a wheel is replaced, tire pressure will not be indicated, the TPMS will not function and the low tire pressure warning light will flash for approximately 1 minute. The light will remain on after 1 minute. Contact your NISSAN dealer as soon as possible for tire replacement and/or system resetting.**
- **Replacing tires with those not originally specified by NISSAN could affect the proper operation of the TPMS.**
- **Do not install a damaged or deformed wheel or tire even if it has been repaired. Such wheels or tires could have structural damage and could fail without warning.**
- **The use of retread tires is not recommended.**
- **For additional information regarding tires, refer to “Important Tire Safety Information” (US) or “Tire Safety Information” (Canada) in the Warranty Information Booklet.**

## Wheel balance

Unbalanced wheels may affect vehicle handling and tire life. Even with regular use, wheels can get out of balance. Therefore, they should be balanced as required.

**Wheel balance service should be performed with the wheels off the vehicle. Spin balancing the wheels on the vehicle could lead to mechanical damage.**

- **For additional information regarding tires, refer to “Important Tire Safety Information” (US) or “Tire Safety Information” (Canada) in the Warranty Information Booklet.**

## Care of wheels

- Wash the wheels when washing the vehicle to maintain their appearance.
- Clean the inner side of the wheels when the wheel is changed or the underside of the vehicle is washed.
- Do not use abrasive cleaners when washing the wheels.
- Inspect wheel rims regularly for dents or corrosion. Such damage may cause loss of pressure or poor seal at the tire bead.
- NISSAN recommends waxing the road wheels to protect against road salt in areas where it is used during winter.

## Spare tire (TEMPORARY USE ONLY spare tire)

Observe the following precautions if the TEMPORARY USE ONLY spare tire must be used. Otherwise, your vehicle could be damaged or involved in an accident:

**WARNING**

- **The spare tire should be used for emergency use only. It should be replaced with the standard tire at the first opportunity to avoid possible tire or differential damage.**
- **Drive carefully while the TEMPORARY USE ONLY spare tire is installed. Avoid sharp turns and abrupt braking while driving.**
- **Periodically check spare tire inflation pressure. Always keep the pressure of the TEMPORARY USE ONLY spare tire at 60 psi (420 kPa, 4.2 bar).**
- **With the TEMPORARY USE ONLY spare tire installed do not drive the vehicle at speeds faster than 50 MPH (80 km/h).**
- **When driving on roads covered with snow or ice, the TEMPORARY USE ONLY spare tire should be used on the rear wheels and the original tire used on the front wheels (drive wheels). Use tire chains only on the front (original) tires.**
- **Tire tread of the TEMPORARY USE ONLY spare tire will wear at a faster rate than the standard tire. Replace the spare tire as soon as the tread wear indicators appear.**
- **Do not use the spare tire on other vehicles.**
- **Do not use more than one spare tire at the same time.**
- **Do not tow a trailer when the TEMPORARY USE ONLY spare tire is installed.**

**CAUTION**

- **Do not use tire chains on a TEMPORARY USE ONLY spare tire. Tire chains will not fit properly and may cause damage to the vehicle.**
- **Because the TEMPORARY USE ONLY spare tire is smaller than the original tire, ground clearance is reduced. To avoid damage to the vehicle, do not drive over obstacles. Also, do not drive the vehicle through an automatic car wash since it may get caught.**

# 9 Technical and consumer information


Recommended fluids/lubricants and capacities . . . . . 9-2
Fuel recommendation . . . . . 9-4
Engine oil and oil filter recommendations . . . . . 9-6
Air conditioner system refrigerant and oil recommendations . . . . . 9-7
Specifications . . . . . 9-8
Engine . . . . . 9-8
Wheels and tires . . . . . 9-9
Dimensions and weights . . . . . 9-10
When traveling or registering your vehicle in another country . . . . . 9-11
Vehicle identification . . . . . 9-11
Vehicle identification number (VIN) plate . . . . . 9-11
Vehicle identification number (chassis number) . . . . . 9-11
Engine serial number . . . . . 9-12
F.M.V.S.S./C.M.V.S.S. certification label . . . . . 9-12
Emission control information label . . . . . 9-12
Tire and loading information label . . . . . 9-13
Air conditioner specification label . . . . . 9-13
Installing front license plate . . . . . 9-14
Vehicle loading information . . . . . 9-14
Terms . . . . . 9-14
Vehicle load capacity . . . . . 9-15
Loading tips . . . . . 9-17
Measurement of weights . . . . . 9-17
Towing a trailer . . . . . 9-18
Flat towing . . . . . 9-18
Uniform tire quality grading . . . . . 9-18
Emission control system warranty . . . . . 9-19
Reporting safety defects . . . . . 9-20
Readiness for inspection/maintenance (I/M) test . . . . . 9-21
Event Data Recorders (EDR) . . . . . 9-21
Owner's Manual/Service Manual order information . . . 9-22

# RECOMMENDED FLUIDS/ LUBRICANTS AND CAPACITIES

**The following are approximate capacities. The actual refill capacities may be slightly different. When refilling, follow the procedure described in the "Maintenance and do-it-yourself" section to determine the proper refill capacity.**

| | Capacity (Approximate) | | | Recommended Fluids and Lubricants |
|---|---|---|---|---|
| | US measure | Imp measure | Liter | |
| Fuel | 13-1/4 gal | 11 gal | 50.0 | See "Fuel recommendation" in this section. |
| Engine oil<br>▪ For further details, see "Engine oil" in the "Maintenance and do-it-yourself" section of this manual. | | | | |
| Drain and Refill | | | | |
| With oil filter change | 4-1/4 qt | 3-1/2 qt | 4.0 | ▪ Engine oil with API Certification Mark.<br>▪ Viscosity SAE 0W-20.<br>▪ For further details, see "Engine oil and oil filter recommendations" in this section.<br>▪ As an alternative to this recommended oil, SAE 5W30 conventional petroleum based oil may be used and meets all specifications and requirements necessary to maintain the New Vehicle Limited Warranty. |
| Without oil filter change | 4 qt | 3-3/8 qt | 3.8 | |
| Cooling system | | | | |
| With reservoir | | | | |
| | 1-3/4 gal | 1-1/2 gal | 6.6 | ▪ Pre-diluted Genuine NISSAN Long Life Antifreeze/Coolant (blue) or equivalent. |
| Continuously Variable Transmission (CVT) fluid | — | — | — | ▪ Genuine NISSAN CVT Fluid NS-3.<br>▪ **Use only Genuine NISSAN CVT Fluid NS-3. Using transmission fluid other than Genuine NISSAN CVT Fluid NS-3 will damage the CVT, which is not covered by the NISSAN new vehicle limited warranty.** |

| | Capacity (Approximate) | | | Recommended Fluids and Lubricants |
|---|---|---|---|---|
| | US measure | Imp measure | Liter | |
| Manual transmission gear oil | — | — | — | ▪ Genuine NISSAN Manual Transmission Fluid (MTF) TL/JR Type 75W-80, or equivalent.<br>▪ If Genuine NISSAN Manual Transmission Fluid (MTF) TL/JR Type is not available, API GL-4+, Viscosity SAE 75W-80 may be used as a temporary replacement. However, use Genuine NISSAN Manual Transmission Fluid (MTF) TL/JR Type as soon as it is available.<br>▪ If Genuine NISSAN Manual Transmission Fluid (MTF) TL/JR Type is not available, API GL-4+, Viscosity SAE 75W-80 may be used as a temporary replacement. However, use Genuine NISSAN Manual Transmission Fluid (MTF) TL/JR Type as soon as it is available. |
| Brake and clutch fluid | ▪ Refill to the proper level according to the instructions in the “Maintenance and do-it-yourself” section.<br>▪ See a NISSAN dealer for service. | | | ▪ Genuine NISSAN Super Heavy Duty Brake Fluid (Available in mainland USA through a NISSAN dealer) or equivalent DOT 3. |
| Multi-purpose grease | — | — | — | ▪ NLGI No. 2 (Lithium Soap base). |
| Air conditioning system refrigerant | — | — | — | ▪ HFC-134a (R-134a).<br>▪ For further details, see “Air conditioner system refrigerant and oil recommendations” in this section. |
| Air conditioning system oil | — | — | — | ▪ Genuine NISSAN A/C System Oil Type S or equivalent.<br>▪ For further details, see “Air conditioner system refrigerant and oil recommendations” in this section. |
| Windshield-washer fluid | 1-1/4 gal | 1 gal | 4.5 | ▪ Genuine NISSAN Windshield Washer Concentrate Cleaner & Antifreeze or equivalent. |

## FUEL RECOMMENDATION

Use unleaded regular gasoline with an octane rating of at least 87 AKI (Anti-Knock Index) number (Research octane number 91).

**⚠ CAUTION**

- **Only vehicles with the E-85 filler door label can operate on E-85. Fuel system or other damage can occur if E-85 is used in vehicles that are not designed to run on E-85.**
- **Using a fuel other than that specified could adversely affect the emission control system, and may also affect the warranty coverage.**
- **Under no circumstances should a leaded gasoline be used, because this will damage the three-way catalyst.**
- **Do not use E-15 or E-85 fuel in your vehicle. Your vehicle is not designed to run on E-15 or E-85 fuel. Using E-15 or E-85 fuel in a vehicle not specifically designed for E-15 or E-85 fuel can adversely affect the emission control devices and systems of the vehicle. Damage caused by such fuel is not covered by the NISSAN new vehicle limited warranty.**
- **U.S. government regulations require ethanol dispensing pumps to be identified by a small, square, orange and black label with the common abbreviation or the appropriate percentage for that region.**

### Gasoline specifications

NISSAN recommends using gasoline that meets the World-Wide Fuel Charter (WWFC) specifications where it is available. Many of the automobile manufacturers developed this specification to improve emission control system and vehicle performance. Ask your service station manager if the gasoline meets the WWFC specifications.

### Reformulated gasoline

Some fuel suppliers are now producing reformulated gasolines. These gasolines are specially designed to reduce vehicle emissions. NISSAN supports efforts towards cleaner air and suggests that you use reformulated gasoline when available.

### Gasoline containing oxygenates

Some fuel suppliers sell gasoline containing oxygenates such as ethanol, MTBE and methanol with or without advertising their presence. NISSAN does not recommend the use of fuels of which the oxygenate content and the fuel compatibility for your NISSAN cannot be readily determined. If in doubt, ask your service station manager.

If you use oxygenate-blend gasoline, please take the following precautions as the usage of such fuels may cause vehicle performance problems and/or fuel system damage.

- **The fuel should be unleaded and have an octane rating no lower than that recommended for unleaded gasoline.**
- **If an oxygenate-blend other than methanol blend is used, it should contain no more than 10% oxygenate. (MTBE may, however, be added up to 15%.)**
- **E-15 fuel contains more than 10% oxygenate. E-15 fuel will adversely affect the emission control devices and systems of the vehicle and should not be used. Damage caused by such fuel is not covered by the NISSAN new vehicle limited warranty.**

- **If a methanol blend is used, it should contain no more than 5% methanol (methyl alcohol, wood alcohol). It should also contain a suitable amount of appropriate cosolvents and corrosion inhibitors. If not properly formulated with appropriate cosolvents and corrosion inhibitors, such methanol blends may cause fuel system damage and/or vehicle performance problems. At this time, sufficient data is not available to ensure that all methanol blends are suitable for use in NISSAN vehicles.**

If any driveability problems such as engine stalling and difficult hot-starting are experienced after using oxygenate-blend fuels, immediately change to a non-oxygenate fuel or a fuel with a low blend of MTBE.

**Take care not to spill gasoline during refueling. Gasoline containing oxygenates can cause paint damage.**

## E–15 fuel

E-15 fuel is a mixture of approximately 15% fuel ethanol and 85% unleaded gasoline. E-15 can only be used in vehicles designed to run on E-15 fuel. Do not use E-15 in your vehicle. U.S. government regulations require fuel ethanol dispensing pumps to be identified with small, square, orange and black label with the common abbreviation or the appropriate percentage for that region.

## E–85 fuel

E-85 fuel is a mixture of approximately 85% fuel ethanol and 15% unleaded gasoline. E-85 can only be used in a Flexible Fuel Vehicle (FFV). Do not use E-85 in your vehicle. U.S. government regulations require fuel ethanol dispensing pumps to be identified by a small, square, orange and black label with the common abbreviation or the appropriate percentage for that region.

## Aftermarket fuel additives

NISSAN does not recommend the use of any aftermarket fuel additives (for example, fuel injector cleaner, octane booster, intake valve deposit removers, etc.) which are sold commercially. Many of these additives intended for gum, varnish or deposit removal may contain active solvents or similar ingredients that can be harmful to the fuel system and engine.

## Octane rating tips

**Using unleaded gasoline with an octane rating lower than recommended can cause persistent, heavy “spark knock.” (“Spark knock” is a metallic rapping noise.) If severe, this can lead to engine damage. If you detect a persistent heavy spark knock even when using gasoline of the stated octane rating, or if you hear steady spark knock while holding a steady speed on level roads, have a NISSAN dealer correct the condition. Failure to correct the condition is misuse of the vehicle, for which NISSAN is not responsible.**

Incorrect ignition timing may result in spark knock, after-run and/or overheating, which may cause excessive fuel consumption or engine damage. If any of the above symptoms are encountered, have your vehicle checked at a NISSAN dealer.

**However, now and then you may notice light spark knock for a short time while accelerating or driving up hills. This is not a cause for concern, because you get the greatest fuel benefit when there is light spark knock for a short time under heavy engine load.**

API certification mark

API service symbol

LTI2051

## ENGINE OIL AND OIL FILTER RECOMMENDATIONS

### Selecting the correct oil

It is essential to choose the correct grade, quality and viscosity engine oil to ensure satisfactory engine life and performance. See “Recommended fluids/lubricants and capacities” in this section. NISSAN recommends the use of an energy conserving oil in order to improve fuel economy.

Select only engine oils that meet the American Petroleum Institute (API) certification or International Lubricant Standardization and Approval Committee (ILSAC) certification and SAE viscosity standard. These oils have the API certification mark on the front of the container. Oils which do not have the specified quality label should not be used as they could cause engine damage.

### Oil additives

NISSAN does not recommend the use of oil additives. The use of an oil additive is not necessary when the proper oil type is used and maintenance intervals are followed.

Oil which may contain foreign matter or has been previously used should not be used.

### Oil viscosity

The engine oil viscosity or thickness changes with temperature. Because of this, it is important to select the engine oil viscosity based on the temperatures at which the vehicle will be operated before the next oil change. Choosing an oil viscosity other than that recommended could cause serious engine damage.

### Selecting the correct oil filter

Your new NISSAN vehicle is equipped with a high-quality genuine NISSAN oil filter. When replacing, use a genuine NISSAN oil filter or its equivalent for the reason described in “Change intervals.”

### Change intervals

The oil and oil filter change intervals for your engine are based on the use of the specified quality oils and filters. Using engine oil and filters that are not of the specified quality, or exceeding recommended oil and filter change intervals could reduce engine life. Damage to the engine caused by improper maintenance or use of incorrect oil and filter quality and/or viscosity is not covered by the NISSAN new vehicle limited warranty.

Your engine was filled with a high-quality engine oil when it was built. You do not have to change the oil before the first recommended change interval. Oil and filter change intervals depend upon how you use your vehicle.

Operation under the following conditions may require more frequent oil and filter changes:

- repeated short distance driving at cold outside temperatures
- driving in dusty conditions
- extensive idling
- towing a trailer
- stop and go commuting

Refer to the “NISSAN Service and Maintenance Guide” for the maintenance schedule.

## AIR CONDITIONER SYSTEM REFRIGERANT AND OIL RECOMMENDATIONS

**The air conditioner system in your NISSAN vehicle must be charged with the refrigerant HFC-134a (R-134a) and NISSAN A/C system oil Type S or the exact equivalents.**

**⚠ CAUTION**

**The use of any other refrigerant or oil will cause severe damage to the air conditioning system and will require the replacement of all air conditioner system components.**

The refrigerant HFC-134a (R-134a) in your NISSAN vehicle does not harm the earth’s ozone layer. Although this refrigerant does not affect the earth’s atmosphere, certain government regulations require the recovery and recycling of any refrigerant during automotive air conditioner system service. A NISSAN dealer has the trained technicians and equipment needed to recover and recycle your air conditioner system refrigerant.

Contact a NISSAN dealer when servicing your air conditioner system.

## ENGINE

| Model | | MRA 8DE |
|---|---|---|
| Type | | Gasoline, 4-cycle, DOHC |
| Cylinder arrangement | | 4-cylinder, inline |
| Bore x Stroke | in (mm) | 3.138 x 3.547 (79.7 x 90.1) |
| Displacement | cu in ($cm^3$) | 109.71 (1,798) |
| Firing order | | 1–3–4–2 |
| Idle speed<br>M/T<br>CVT (in “N” position)<br>Ignition timing (degree B.T.D.C. at idle speed)<br>CO % at idle | | No adjustment is necessary. |
| Spark plug | | PLZKAR6A-11 (all except California models)<br>DILKAR6A-11 (California models) |
| Spark plug gap (Nominal) | in (mm) | 0.043 (1.1) |
| Camshaft operation | | Timing chain |

**This spark ignition system complies with the Canadian standard ICES-002.**

## WHEELS AND TIRES

| Wheel type | Size | Offset mm (in) |
|---|---|---|
| Aluminum | 16 x 6.5J | 45 (1.77) |
| Steel | 17 x 6.5J | 45 (1.77) |
| | 16 x 6.5JJ | 45 (1.77) |

| | |
|---|---|
| Tire size | P205/55R16<br>P205/50R17 |
| Spare tire | T125/70D16 |

## DIMENSIONS AND WEIGHTS

| Model | | Unit: mm (in) |
|---|---|---|
| Overall length | | 4,625 (182.1) |
| | SR | 4,635 (182.5) |
| Overall width | | 1,760 (69.3) |
| Overall height | | 1,495 (58.9) |
| Front Track | | 1,530 (60.2) |
| Rear Track | | 1,530 (60.2) |
| Wheelbase | | 2,700 (106.3) |
| Gross vehicle weight rating | kg (lb) | See the "F.M.V.S.S./C.M.V.S.S. certification label" on the center pillar between the driver's side front and rear doors. |
| Gross axle weight rating | | |
| Front | kg (lb) | |
| Rear | kg (lb) | |

## WHEN TRAVELING OR REGISTERING YOUR VEHICLE IN ANOTHER COUNTRY

**When planning to drive your NISSAN vehicle in another country,** you should first find out if the fuel available is suitable for your vehicle's engine.

Using fuel with an octane rating that is too low may cause engine damage. All gasoline vehicles must be operated with unleaded gasoline. Therefore, avoid taking your vehicle to areas where appropriate fuel is not available.

**When transferring the registration of your vehicle to another country, state, province or district,** it may be necessary to modify the vehicle to meet local laws and regulations.

The laws and regulations for motor vehicle emission control and safety standards vary according to the country, state, province or district; therefore, vehicle specifications may differ.

**When any vehicle is to be taken into another country, state, province or district and registered, its modifications, transportation and registration are the responsibility of the user. NISSAN is not responsible for any inconvenience that may result.**

## VEHICLE IDENTIFICATION

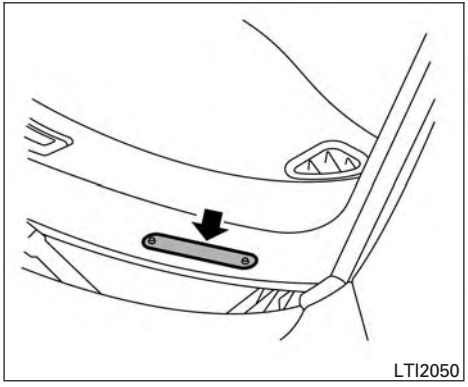


### VEHICLE IDENTIFICATION NUMBER (VIN) PLATE

The vehicle identification number (VIN) plate is attached as shown. This number is the identification for your vehicle and is used in the vehicle registration.

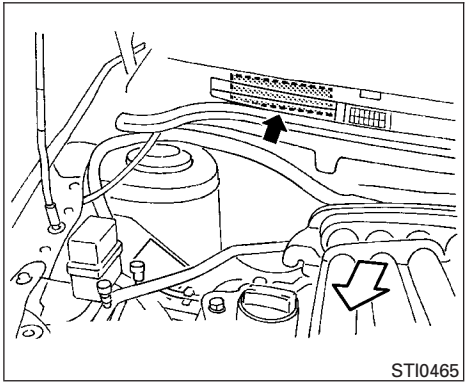


### VEHICLE IDENTIFICATION NUMBER (chassis number)

The vehicle identification number is located as shown.

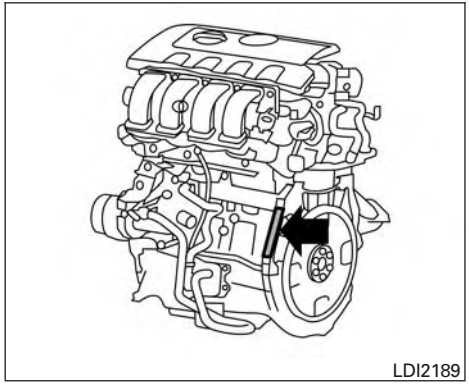


## ENGINE SERIAL NUMBER

The number is stamped on the engine as shown.

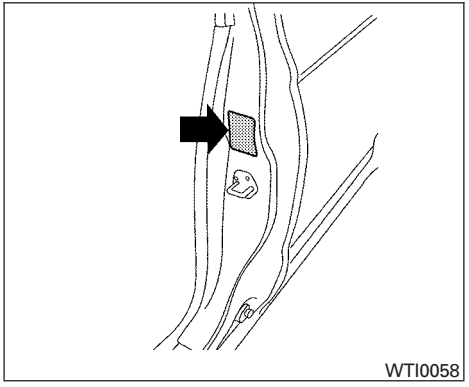


## F.M.V.S.S./C.M.V.S.S. CERTIFICATION LABEL

The Federal/Canadian Motor Vehicle Safety Standard (F.M.V.S.S./C.M.V.S.S.) certification label is affixed as shown. This label contains valuable vehicle information, such as: Gross Vehicle Weight Ratings (GVWR), Gross Axle Weight Rating (GAWR), month and year of manufacture, Vehicle Identification Number (VIN), etc. Review it carefully.

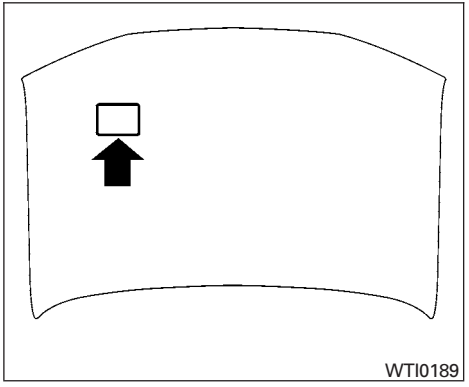


## EMISSION CONTROL INFORMATION LABEL

The emission control information label is attached to the underside of the hood as shown.

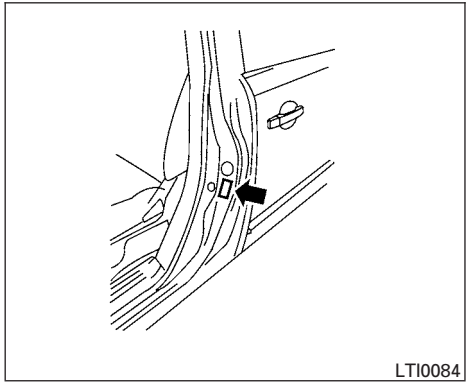


## TIRE AND LOADING INFORMATION LABEL

The cold tire pressure is shown on the Tire and Loading Information label. The label is located as shown.

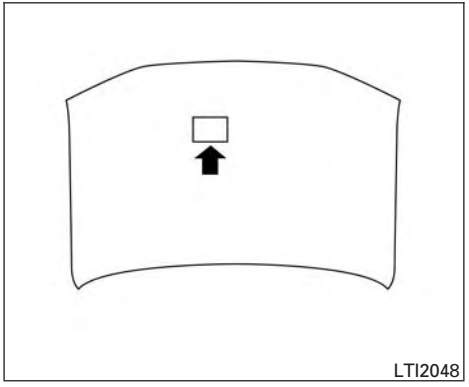


## AIR CONDITIONER SPECIFICATION LABEL

The air conditioner specification label is affixed to the underside of the hood as shown.

## INSTALLING FRONT LICENSE PLATE

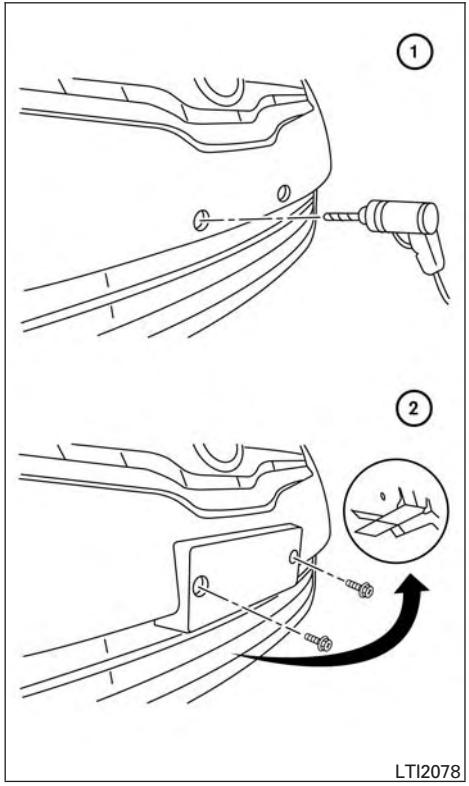


Use the following steps to mount the front license plate:

① Make holes on the plastic finisher at the location mark (small dimple) using a 0.20 in (5 mm) drill. Apply light pressure to the drill. Install the license plate holder using the two screws provided with the holder.

② Mount the license plate **using two M6-14mm bolts.**

## VEHICLE LOADING INFORMATION

**⚠WARNING**

- **It is extremely dangerous to ride in a cargo area inside a vehicle. In a collision, people riding in these areas are more likely to be seriously injured or killed.**
- **Do not allow people to ride in any area of your vehicle that is not equipped with seats and seat belts.**
- **Be sure everyone in your vehicle is in a seat and using a seat belt properly.**

### TERMS

It is important to familiarize yourself with the following terms before loading your vehicle:

- Curb Weight (actual weight of your vehicle) - vehicle weight including: standard and optional equipment, fluids, emergency tools, and spare tire assembly. This weight **does not** include passengers and cargo.

- GVW (Gross Vehicle Weight) - curb weight plus the combined weight of passengers and cargo.
- GVWR (Gross Vehicle Weight Rating) - maximum total combined weight of the unloaded vehicle, passengers, luggage, hitch, trailer tongue load and any other optional equipment. This information is located on the F.M.V.S.S./C.M.V.S.S. certification label.
- GAWR (Gross Axle Weight Rating) - maximum weight (load) limit specified for the front or rear axle. This information is located on the F.M.V.S.S./C.M.V.S.S. certification label.
- GCWR (Gross Combined Weight rating) - The maximum total weight rating of the vehicle, passengers, cargo, and trailer.
- Vehicle Capacity Weight, Load limit, Total load capacity - maximum total weight limit specified of the load (passengers and cargo) for the vehicle. This is the maximum combined weight of occupants and cargo that can be loaded into the vehicle. If the vehicle is used to tow a trailer, the trailer tongue weight must be included as part of the cargo load. This information is located on the Tire and Loading Information label.
- Cargo capacity - permissible weight of cargo, the subtracted weight of occupants from the load limit.

## VEHICLE LOAD CAPACITY

Do not exceed the load limit of your vehicle shown as “The combined weight of occupants and cargo” on the Tire and Loading Information label. Do not exceed the number of occupants shown as “Seating Capacity” on the Tire and Loading Information label.

To get “the combined weight of occupants and cargo”, add the weight of all occupants, then add the total luggage weight. Examples are shown in the following illustration.

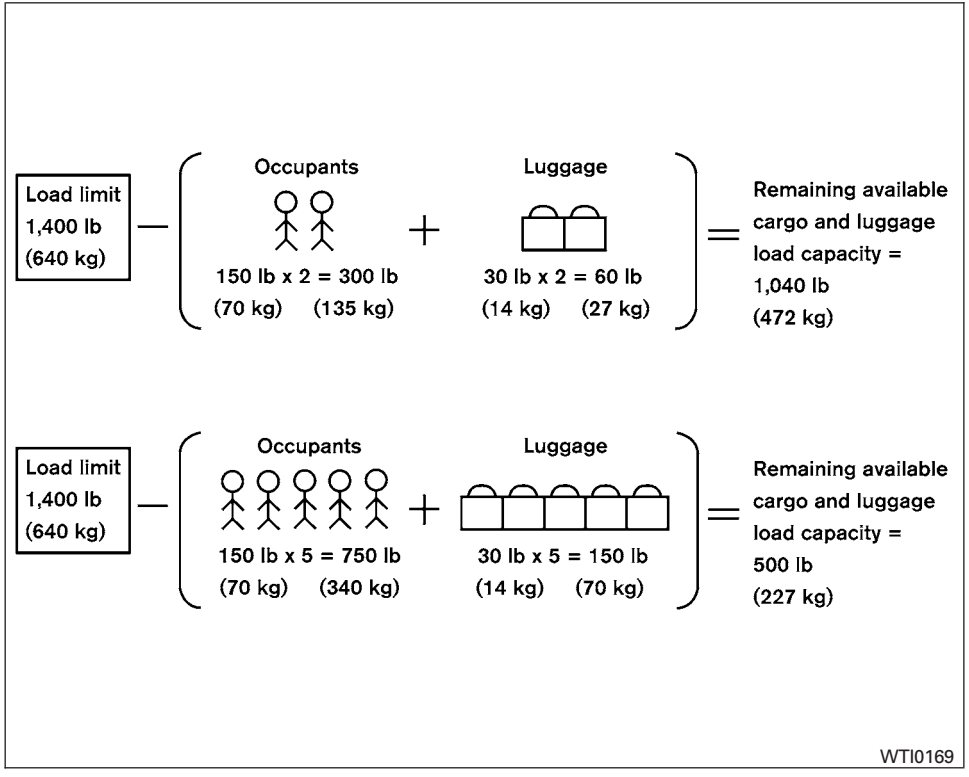


**Example**

Steps for determining correct load limit

1. Locate the statement “The combined weight of occupants and cargo should never exceed XXX lbs or XXX kg” on your vehicle’s placard.
2. Determine the combined weight of the driver and passengers that will be riding in your vehicle.
3. Subtract the combined weight of the driver and passengers from XXX lbs or XXX kg.
4. The resulting figure equals the available amount of cargo and luggage load capacity. For example, if the XXX amount equals 1,400 lbs. and there will be five 150 lb. passengers in your vehicle, the amount of available cargo and luggage load capacity is 650 lbs. (1,400-750 (5 X 150) = 650 lbs) or (640-340 (5 X 70) = 300 kg.)

5. Determine the combined weight of luggage and cargo being loaded on the vehicle. That weight may not safely exceed the available cargo and luggage load capacity calculated in Step 4.
6. If your vehicle will be towing a trailer, load from your trailer will be transferred to your vehicle. Consult this manual to determine how this reduces the available cargo and luggage load capacity of your vehicle.

Before driving a loaded vehicle, confirm that you do not exceed the Gross Vehicle Weight Rating (GVWR) or the Gross Axle Weight Rating (GAWR) for your vehicle. See “Measurement of weights” in this section.

Also check tires for proper inflation pressures. See the Tire and Loading Information label.

## LOADING TIPS

- The GVW must not exceed GVWR or GAWR as specified on the F.M.V.S.S./C.M.V.S.S. certification label.
- Do not load the front and rear axle to the GAWR. Doing so will exceed the GVWR.

**⚠WARNING**

- **Properly secure all cargo with ropes or straps to help prevent it from sliding or shifting. Do not place cargo higher than the seatbacks. In a sudden stop or collision, unsecured cargo could cause personal injury.**
- **Do not load your vehicle any heavier than the GVWR or the maximum front and rear GAWRs. If you do, parts of your vehicle can break, tire damage could occur, or it can change the way your vehicle handles. This could result in loss of control and cause personal injury.**
- **Overloading not only can shorten the life of your vehicle and the tire, but can also cause unsafe vehicle handling and longer braking distances. This may cause a premature tire failure which could result in a serious accident and personal injury. Failures caused by overloading are not covered by the vehicle’s warranty.**

## MEASUREMENT OF WEIGHTS

Secure loose items to prevent weight shifts that could affect the balance of your vehicle. When the vehicle is loaded, drive to a scale and weigh the front and the rear wheels separately to determine axle loads. Individual axle loads should not exceed either of the gross axle weight ratings (GAWR). The total of the axle loads should not exceed the gross vehicle weight rating (GVWR). These ratings are given on the vehicle certification label. If weight ratings are exceeded, move or remove items to bring all weights below the ratings.

**Do not tow a trailer with your vehicle.**

## FLAT TOWING

Towing your vehicle with all four wheels on the ground is sometimes called flat towing. This method is sometimes used when towing a vehicle behind a recreational vehicle, such as a motor home.

**⚠ CAUTION**

- **Failure to follow these guidelines can result in severe transmission damage.**
- **Whenever flat towing your vehicle, always tow forward, never backward.**
- **DO NOT tow any continuously variable transmission vehicle with all four wheels on the ground (flat towing). Doing so WILL DAMAGE internal transmission parts due to lack of transmission lubrication.**
- **For emergency towing procedures refer to "Towing recommended by NISSAN" in the "In case of emergency" section of this manual.**

### Manual Transmission (if so equipped)

- Always tow with the manual transmission in Neutral.
- After towing 500 miles (805 km), start and idle the engine with the transmission in Neutral for two minutes. Failure to idle the engine after every 500 miles (805 km) of towing may cause damage to internal transmission parts.

### Continuously Variable Transmission (if so equipped)

To tow a vehicle equipped with a continuously variable transmission, an appropriate vehicle dolly **MUST** be placed under the towed vehicle's drive wheels. **Always** follow the dolly manufacturer's recommendations when using their product.



DOT (Department of Transportation) Quality Grades: All passenger car tires must conform to federal safety requirements in addition to these grades.

Quality grades can be found where applicable on the tire sidewall between tread shoulder and maximum section width. For example:

**Treadwear 200 Traction AA Temperature A**

Treadwear

The treadwear grade is a comparative rating based on the wear rate of the tire when tested under controlled conditions on a specified government test course. For example, a tire graded 150 would wear one and one-half (1 1/2) times as well on the government course as a tire graded 100. The relative performance of tires depends upon the actual conditions of their use, however, and may depart significantly from the norm due to variations in driving habits, service practices and differences in road characteristics and climate.

Traction AA, A, B and C

The traction grades, from highest to lowest, are AA, A, B, and C. Those grades represent the tire's ability to stop on wet pavement as measured under controlled conditions on specified government test surfaces of asphalt and concrete. A tire marked C may have poor traction performance.

**⚠ WARNING**

**The traction grade assigned to this tire is based on straight-ahead braking traction tests, and does not include acceleration, cornering, hydroplaning, or peak traction characteristics.**

Temperature A, B and C

The temperature grades are A (the highest), B, and C, representing the tire's resistance to the generation of heat, and its ability to dissipate heat when tested under controlled conditions on a specified indoor laboratory test wheel. Sustained high temperature can cause the material of the tire to degenerate and reduce tire life, and excessive temperature can lead to sudden tire failure. The grade C corresponds to a level of performance which all passenger car tires must meet under the Federal Motor Safety Standard No. 109. Grades B and A represent higher levels of performance on the laboratory test wheel than the minimum required by law.

**⚠ WARNING**

**The temperature grade for this tire is established for a tire that is properly inflated and not overloaded. Excessive speed, under-inflation, or excessive loading, either separately or in combination, can cause heat build-up and possible tire failure.**

## EMISSION CONTROL SYSTEM WARRANTY

Your NISSAN vehicle is covered by the following emission warranties:

**For USA**

1. Emission Defects Warranty
2. Emissions Performance Warranty

Details of this warranty may be found with other vehicle warranties in your Warranty Information Booklet which comes with your NISSAN vehicle. If you did not receive a Warranty Information Booklet, or it is lost, you may obtain a replacement by writing to:

- Nissan North America, Inc.
  Consumer Affairs Department
  P.O. Box 685003
  Franklin, TN 37068-5003

**For Canada**

Emission Control System Warranty

Details of this warranty may be found with other vehicle warranties in your Warranty Information Booklet which comes with your NISSAN vehicle. If you did not receive a Warranty Information Booklet, or it is lost, you may obtain a replacement by writing to:

- Nissan Canada Inc.
  5290 Orbitor Drive
  Mississauga, Ontario, L4W 4Z5

### For USA

If you believe that your vehicle has a defect which could cause a crash or could cause injury or death, you should immediately inform the National Highway Traffic Safety Administration (NHTSA) in addition to notifying NISSAN.

If NHTSA receives similar complaints, it may open an investigation, and if it finds that a safety defect exists in a group of vehicles, it may order a recall and remedy campaign. However, NHTSA cannot become involved in individual problems between you, your dealer, or NISSAN.

To contact NHTSA, you may call the Vehicle Safety Hotline toll-free at 1-888-327-4236 (TTY: 1-800-424-9153); go to http://www.safercar.gov; or write to: Administrator, NHTSA, 400 Seventh Street, SW., Washington, D.C. 20590. You can also obtain other information about motor vehicle safety from http://www.safercar.gov.

You may notify NISSAN by contacting our Consumer Affairs Department, toll-free, at 1-800-NISSAN-1.

### For Canada

If you believe that your vehicle has a defect which could cause a crash or could cause injury or death, you should immediately inform Transport Canada in addition to notifying NISSAN.

If Transport Canada receives complaints, it may open an investigation, and if it finds that a safety defect exists in a group of vehicles, it may request that NISSAN conduct a recall campaign. However, Transport Canada cannot become involved in individual problems between you, your dealer, or NISSAN.

You may contact Transport Canada's Defect Investigations and Recalls Division toll free at 1-800-333-0510. You may also report safety defects online at: https://wwwapps.tc.gc.ca/Saf-Sec-Sur/7/PCDB-BDPP/fc-cp.aspx?lang=eng (English speakers) or https://wwwapps.tc.gc.ca/Saf-Sec-Sur/7/PCDB-BDPP/fc-cp.aspx?lang=fra (French speakers)

Additional information concerning motor vehicle safety may be obtained from Transport Canada's Road Safety Information Centre at 1-800-333-0371 or online at www.tc.gc.ca/roadsafety (English speakers) or www.tc.gc.ca/securiteroutiere (French speakers).

To notify NISSAN of any safety concerns please contact our Consumer Information Centre toll free at 1-800-387-0122.

## READINESS FOR INSPECTION/ MAINTENANCE (I/M) TEST

Due to legal requirements in some states and Canadian Provinces, your vehicle may be required to be in what is called the “ready condition” for an Inspection/Maintenance (I/M) test of the emission control system.

The vehicle is set to the “ready condition” when it is driven through certain driving patterns. Usually, the ready condition can be obtained by ordinary usage of the vehicle.

If a powertrain system component is repaired or the battery is disconnected, the vehicle may be reset to a “not ready” condition. Before taking the I/M test, check the vehicle’s inspection/maintenance test readiness condition. Place the ignition switch in the ON position without starting the engine. If the Malfunction Indicator Light (MIL) comes on steady for 20 seconds and then blinks for 10 seconds , the I/M test condition is “not ready”. If the MIL does not blink after 20 seconds, the I/M test condition is “ready”. Contact a NISSAN dealer to set the “ready condition” or to prepare the vehicle for testing.

## EVENT DATA RECORDERS (EDR)

This vehicle is equipped with an Event Data Recorder (EDR). The main purpose of an EDR is to record, in certain crash or near crash-like situations, such as an air bag deployment or hitting a road obstacle, data that will assist in understanding how a vehicle’s systems performed. The EDR is designed to record data related to vehicle dynamics and safety systems for a short period of time, typically 30 seconds or less. The EDR in this vehicle is designed to record such data as:

- How various systems in your vehicle were operating;
- Whether or not the driver and passenger safety belts were buckled/fastened;
- How far (if at all) the driver was depressing the accelerator and/or brake pedal; and,
- How fast the vehicle was traveling.
- Sounds are not recorded.

These data can help provide a better understanding of the circumstances in which crashes and injuries occur. NOTE: EDR data are recorded by your vehicle only if a nontrivial crash situation occurs; no data are recorded by the EDR under normal driving conditions and no personal data (e.g. name, gender, age and crash location) are recorded. However, other parties, such as law enforcement, could combine the EDR data with the type of personally identifying data routinely acquired during a crash investigation.

To read data recorded by an EDR, special equipment is required and access to the vehicle or the EDR is needed. In addition to the vehicle manufacturer and NISSAN dealer, other parties, such as law enforcement, that have the special equipment, can read the information if they have access to the vehicle or the EDR. EDR data will only be accessed with the consent of the vehicle owner or lessee or as otherwise required or permitted by law.

## OWNER'S MANUAL/SERVICE MANUAL ORDER INFORMATION

Genuine NISSAN Service Manuals for this model year and prior can be purchased. A genuine NISSAN Service Manual is the best source of service and repair information for your vehicle. This manual is the same one used by the factory-trained technicians working at NISSAN dealerships. Genuine NISSAN Owner's Manuals can also be purchased.

**For USA**

For current pricing and availability of genuine **NISSAN Service Manuals**, contact:

1-800-450-9491
www.nissan-techinfo.com

For current pricing and availability of genuine **NISSAN Owner's Manuals**, contact:

1-800-247-5321

**For Canada**

To purchase a copy of a genuine NISSAN Service Manual or Owner's Manual, for this model year and prior, please contact your nearest NISSAN dealer. For the phone number and location of a NISSAN dealer in your area, call the NISSAN Information Center at 1-800-387-0122 and a bilingual NISSAN representative will assist you.

# 10 Index

## A


ABS (Anti-lock Braking System). . . . . .5-30
Air bag (See supplemental restraint system) . . . . . .1-36
Air bag system
Front (See supplemental front impact air bag system) . . . . . .1-44
Side and curtain (See supplemental side air bag and curtain side-impact air bag system) . . . . . .1-49
Air bag warning labels . . . . . .1-51
Air bag warning light. . . . . .1-51, 2-17
Air cleaner housing filter . . . . . .8-17
Air conditioner
Air conditioner operation . . . . . .4-19
Air conditioner service . . . . . .4-27
Air conditioner specification label . . . . .9-13
Air conditioner system refrigerant and oil recommendations . . . . . .9-7
Heater and air conditioner controls. . . . . .4-16, 4-25
Servicing air conditioner . . . . . .4-27
Air flow charts. . . . . .4-20
Alarm system
(See vehicle security system) . . . . . .2-21
Anchor point locations . . . . . .1-22
Antenna . . . . . .4-66
Anti-lock brake warning light. . . . . .2-13
Anti-lock Braking System (ABS). . . . . .5-30
Armrests . . . . . .1-4
Audible reminders . . . . . .2-20
Audio system . . . . . .4-27
Bluetooth® audio . . . . . .4-61, 4-62
Compact disc (CD) player . .4-39, 4-44, 4-50
FM-AM radio with compact disc (CD) player . . . . . .4-36
FM/AM/SAT radio with compact disc (CD) player . . . . . .4-42, 4-48
Audio System
iPod® Player. . . . . .4-56, 4-58
Audio system
Radio . . . . . .4-27
Steering wheel audio control switch . . .4-65
USB interface . . . . . .4-52, 4-54
Autolight switch. . . . . .2-27
Automatic
Automatic power window switch . . . . .2-41
Transmission shift selector lock release. .5-18
Automatic anti-glare inside mirror . . . . . .3-30
Automatic door locks . . . . . .3-6
AUX jack. . . . . .4-40, 4-45, 4-52


## B


Battery. . . . . .8-13
Charge warning light . . . . . .2-14
Before starting the engine . . . . . .5-13
Belt (See drive belt) . . . . . .8-16
Block heater
Engine . . . . . .5-35
Bluetooth® audio . . . . . .4-61, 4-62
Bluetooth® hands-free phone system . . . . . .4-68, 4-83, 4-93
Booster seats . . . . . .1-33
Brake
Anti-lock Braking System (ABS). . . . . .5-30
Brake fluid. . . . . .8-12
Brake light (See stop light). . . . . .8-30
Brake system . . . . . .5-30
Brake warning light . . . . . .2-13
Brake wear indicators . . . . . .2-20, 8-21
Parking brake operation . . . . . .5-21
Self-adjusting brakes. . . . . .8-21
Brakes. . . . . .8-21
Break-in schedule . . . . . .5-25
Brightness/contrast button . . . . . .4-9
Brightness control
Instrument panel . . . . . .2-29
Bulb check/instrument panel. . . . . .2-13
Bulb replacement. . . . . .8-30


## C


Capacities and recommended fuel/lubricants. . . . . .9-2
Cargo net . . . . . .2-39
Cargo (See vehicle loading information) . . .9-14
Car phone or CB radio. . . . . .4-67
CD care and cleaning . . . . . .4-64
CD player (See audio system). .4-39, 4-44, 4-50
Child restraints. . . . . .1-16, 1-17, 1-18, 1-20
Precautions on child restraints . . . . . .1-18, 1-24, 1-29, 1-33
Top tether strap anchor point locations . .1-22
Child safety rear door lock. . . . . .3-6

Chimes, audible reminders . . . . . .2-20
Cleaning exterior and interior . . . . . .7-2
Clock . . . . . .4-38
(models without navigation system) . . . .4-38
Clock set . . . . . .4-38
C.M.V.S.S. certification label . . . . . .9-12
Cold weather driving. . . . . .5-33
Compact disc (CD) player . . . .4-39, 4-44, 4-50
Console box . . . . . .2-37
Console light . . . . . .2-45
Continuously Variable Transmission (CVT). . .5-16
Continuously Variable Transmission
(CVT) fluid . . . . . .8-11
Driving with Continuously Variable
Transmission (CVT) . . . . . .5-16
Transmission shift selector lock release . .5-18
Control panel buttons . . . . . .4-4
Brightness/contrast button . . . . . .4-9
Enter button . . . . . .4-4
Setting button . . . . . .4-7
Controls
Audio controls (steering wheel). . . . . .4-65
Heater and air conditioner
controls . . . . . .4-16, 4-25
Coolant
Capacities and recommended
fuel/lubricants . . . . . .9-2
Changing engine coolant . . . . . .8-8
Checking engine coolant level . . . . . .8-8
Engine coolant temperature gauge . . . . .2-6
Corrosion protection . . . . . .7-6
Cruise control . . . . . .5-24
Cup holders . . . . . .2-36, 2-37
Curtain side-impact air bag system
(See supplemental side air bag and curtain
side-impact air bag system). . . . . .1-49

## D

Daytime running light system (Canada only). .2-28
Defroster switch
Rear window defroster switch . . . . . .2-25
Dimensions and weights . . . . . .9-10
Dimmer switch for instrument panel . . . . . .2-29
Display controls (see control panel buttons) . .4-4
Door locks . . . . . .3-4
Door open warning light. . . . . .2-14
Drive belt . . . . . .8-16
Driving
Cold weather driving. . . . . .5-33
Driving with Continuously Variable
Transmission (CVT) . . . . . .5-16
Driving with manual transmission . . . . . .5-19
Precautions when starting and driving . . . .5-2

## E

Economy - fuel . . . . . .5-27
Emission control information label . . . . . .9-12
Emission control system warranty . . . . . .9-19
Engine
Before starting the engine. . . . . .5-13
Block heater . . . . . .5-35
Capacities and recommended
fuel/lubricants . . . . . .9-2
Changing engine coolant . . . . . .8-8
Changing engine oil . . . . . .8-10
Changing engine oil filter . . . . . .8-11
Checking engine coolant level . . . . . .8-8
Checking engine oil level . . . . . .8-9
Engine compartment check locations . . . .8-6
Engine coolant temperature gauge . . . . .2-6
Engine cooling system . . . . . .8-7
Engine oil . . . . . .8-9
Engine oil and oil filter recommendation . . .9-6
Engine oil pressure warning light . . . . . .2-14
Engine oil viscosity . . . . . .9-6
Engine serial number . . . . . .9-12
Engine specifications . . . . . .9-8
Starting the engine . . . . . .5-14, 5-15
Enter button . . . . . .4-4
Event data recorders . . . . . .9-21
Exhaust gas (Carbon monoxide) . . . . . .5-2
Extended storage switch . . . . . .8-24
Eyeglass case . . . . . .2-35

## F

Flashers (See hazard warning flasher switch). .6-2
Flat tire . . . . . .6-3
Floor mat positioning aid . . . . . .7-5
Fluid
Brake fluid . . . . . .8-12
Capacities and recommended
fuel/lubricants . . . . . .9-2
Continuously Variable Transmission
(CVT) fluid . . . . . .8-11
Engine coolant. . . . . .8-7
Engine oil . . . . . .8-9
F.M.V.S.S. certification label. . . . . .9-12
Fog light switch . . . . . .2-29
Front air bag system
(See supplemental restraint system) . . . . . .1-44
Front seats . . . . . .1-2

Fuel
Capacities and recommended fuel/lubricants . . . . . .9-2
Fuel economy . . . . . .5-27
Fuel-filler door and cap . . . . . .3-25
Fuel-filler door lock opener lever . . . . . .3-25
Fuel gauge . . . . . .2-6
Fuel octane rating . . . . . .9-5
Fuel recommendation . . . . . .9-4
Loose fuel cap warning . . . . . .2-4, 3-25
Fuses . . . . . .8-21
Fusible links . . . . . .8-23

## G

Gas cap . . . . . .3-25
Gauge
Engine coolant temperature gauge . . . . .2-6
Fuel gauge . . . . . .2-6
Odometer . . . . . .2-4
Speedometer . . . . . .2-3
Tachometer . . . . . .2-5
Trip computer . . . . . .2-7
Trip odometer . . . . . .2-4
General maintenance . . . . . .8-2
Glove box. . . . . .2-37
Glove box lock . . . . . .2-37

## H

Hands-free phone system, Bluetooth®. . . . . .4-68, 4-83, 4-93
Hazard warning flasher switch . . . . . .6-2
Headlight and turn signal switch . . . . . .2-26
Headlight control switch . . . . . .2-26
Headlights . . . . . .8-28
Head restraints . . . . . .1-5
Heated seats. . . . . .2-30
Heater
Heater and air conditioner controls . . . . . .4-16, 4-25
Heater operation . . . . . .4-18, 4-26
Hood release. . . . . .3-23
Horn . . . . . .2-30

## I

Ignition switch . . . . . .5-8
Ignition Switch
Push-Button Ignition Switch . . . . . .5-10
Immobilizer system . . . . . .2-23, 3-4, 5-10, 5-13
Important vehicle information label . . . . . .9-12
In-cabin microfilter . . . . . .8-18
Increasing fuel economy. . . . . .5-27
Indicator lights and audible reminders (See warning/indicator lights and audible reminders) . . . . . .2-12
Inside automatic anti-glare mirror. . . . . .3-30
Inside mirror . . . . . .3-29
Instrument brightness control. . . . . .2-29
Instrument panel . . . . . .0-6, 2-2
Instrument panel dimmer switch . . . . . .2-29
Intelligent Key system
Key operating range . . . . . .3-12
Key operation . . . . . .3-13
Mechanical key . . . . . .3-3
Remote keyless entry operation. . . . . .3-16
Troubleshooting guide. . . . . .3-22
Warning signals . . . . . .3-22
Interior light . . . . . .2-44, 2-45
Interior trunk lid release . . . . . .3-24
iPod® Player . . . . . .4-56, 4-58
ISOFIX child restraints . . . . . .1-20

## J

Jump starting . . . . . .6-8

## K

Key . . . . . .3-2
Keyfob battery replacement. . . . . .8-25
Keyless entry
With Intelligent Key system (See Intelligent Key system). . . . . .3-16
Keys, For Intelligent Key system . . . . . .3-10

## L

Labels
Air conditioner specification label . . . . .9-13
C.M.V.S.S. certification label . . . . . .9-12
Emission control information label . . . . .9-12
Engine serial number . . . . . .9-12
F.M.V.S.S. certification label. . . . . .9-12
Tire and Loading Information label . . . . .9-13
Vehicle identification number (VIN) plate. .9-11
Warning labels (for SRS) . . . . . .1-51
LATCH (Lower Anchors and Tethers for CHildren) System . . . . . .1-20
Light
Air bag warning light . . . . . .1-51, 2-17

Brake light (See stop light) . . . . . .8-30
Bulb check/instrument panel . . . . . .2-13
Bulb replacement . . . . . .8-30
Charge warning light . . . . . .2-14
Console light . . . . . .2-45
Fog light switch . . . . . .2-29
Headlight and turn signal switch . . . . . .2-26
Headlight control switch . . . . . .2-26
Headlights . . . . . .8-28
Interior light . . . . . .2-44, 2-45
Light bulbs . . . . . .8-28
Low tire pressure warning light . . . . . .2-14
Low windshield-washer fluid warning light . . . . . .2-16
Passenger air bag and status light . . . . .1-45
Security indicator light. . . . . .2-19
Spotlights (See map light) . . . . . .2-46
Trunk light . . . . . .2-46
Warning/indicator lights and audible reminders. . . . . .2-12
Lights
Map lights . . . . . .2-46
Lock
Child safety rear door lock . . . . . .3-6
Door locks . . . . . .3-4
Fuel-filler door lock opener lever . . . . . .3-25
Glove box lock . . . . . .2-37
Power door locks . . . . . .3-5
Trunk lid lock opener lever. . . . . .3-24
Loose fuel cap warning . . . . . .2-4, 3-25
Low fuel warning light . . . . . .2-14
Low tire pressure warning light . . . . . .2-14
Low windshield-washer fluid warning light. . .2-16
Luggage (See vehicle loading information) . .9-14

## M

Maintenance
General maintenance . . . . . .8-2
Inside the vehicle . . . . . .8-3
Maintenance precautions . . . . . .8-5
Outside the vehicle . . . . . .8-2
Seat belt maintenance. . . . . .1-15
Under the hood and vehicle . . . . . .8-4
Malfunction indicator light. . . . . .2-18
Manual front seat adjustment. . . . . .1-2
Map lights . . . . . .2-46
Map pocket. . . . . .2-33
Meters and gauges . . . . . .2-3
Instrument brightness control. . . . . .2-29
Mirror
Automatic anti-glare inside mirror. . . . . .3-30
Inside mirror . . . . . .3-29
Outside mirror control . . . . . .3-30
Outside mirrors . . . . . .3-30
Vanity mirror . . . . . .3-29
Moonroof . . . . . .2-42

## N

NISSAN Intelligent Key® . . . . . .3-2
NISSAN vehicle immobilizer system. . . . . .2-23, 3-4, 5-10, 5-13
NISSAN voice recognition system . . . . . .4-101

## O

Octane rating (See fuel octane rating). . . . . .9-5
Odometer . . . . . .2-4
Oil
Capacities and recommended fuel/lubricants . . . . . .9-2
Changing engine oil . . . . . .8-10
Changing engine oil filter . . . . . .8-11
Checking engine oil level . . . . . .8-9
Engine oil . . . . . .8-9
Engine oil and oil filter recommendation . . .9-6
Engine oil viscosity . . . . . .9-6
One shot call . . . . . .4-72, 4-86, 4-95, 4-96
Outside mirror control . . . . . .3-30
Outside mirrors . . . . . .3-30
Overheat
If your vehicle overheats. . . . . .6-10
Owner's manual order form . . . . . .9-22
Owner's manual/service manual order information . . . . . .9-22

## P

Pandora audio . . . . . .4-63
Parking
Parking brake operation . . . . . .5-21
Parking/parking on hills . . . . . .5-28
Phone, Bluetooth® hands-free system . . . . . .4-68, 4-83, 4-93
Power
Power door locks . . . . . .3-5
Power outlet . . . . . .2-32
Power rear windows. . . . . .2-41
Power steering system . . . . . .5-29
Power windows . . . . . .2-39
Rear power windows . . . . . .2-41
Precautions
Maintenance precautions . . . . . .8-5

Precautions on child restraints. . . . . .1-18, 1-24, 1-29, 1-33
Precautions on seat belt usage. . . . . .1-9
Precautions on supplemental restraint system . . . . . .1-36
Precautions when starting and driving . . . .5-2
Programmable features . . . . . .4-7
Push starting . . . . . .6-10

## R

Radio
Car phone or CB radio . . . . . .4-67
FM-AM radio with compact disc (CD) player . . . . . .4-36
FM/AM/SAT radio with compact disc (CD) player . . . . . .4-42, 4-48
Steering wheel audio control switch . . . .4-65
Readiness for inspection maintenance (I/M) test . . . . . .9-21
Rear power windows . . . . . .2-41
Rear seat. . . . . .1-4
RearView Monitor . . . . . .4-10
Rear window defroster switch . . . . . .2-25
Recorders
Event data . . . . . .9-21
Refrigerant recommendation . . . . . .9-7
Registering your vehicle in another country . .9-11
Reporting safety defects (US only) . . . . . .9-20

## S

Safety
Child safety rear door lock . . . . . .3-6
Child seat belts . . . . .1-18, 1-24, 1-29, 1-33
Reporting safety defects (US only) . . . . .9-20
Seat adjustment
Front manual seat adjustment . . . . . .1-2
Rear seat adjustment . . . . . .1-4
Seatback pockets . . . . . .2-34
Seat belt
Child safety. . . . . .1-16
Infants and small children . . . . . .1-17
Injured Person . . . . . .1-12
Larger children . . . . . .1-17
Precautions on seat belt usage. . . . . .1-9
Pregnant women. . . . . .1-12
Seat belt extenders . . . . . .1-15
Seat belt maintenance. . . . . .1-15
Seat belts . . . . . .1-9
Shoulder belt height adjustment . . . . . .1-15
Three-point type with retractor . . . . . .1-12
Seat belt warning light. . . . . .2-17
Seats
Adjustment. . . . . .1-2
Front seats . . . . . .1-2
Heated seats . . . . . .2-30
Manual front seat adjustment. . . . . .1-2
Rear seat. . . . . .1-4
Security indicator light. . . . . .2-19
Security system (NISSAN vehicle immobilizer system), engine start . . . . .2-23, 3-4, 5-10, 5-13
Self-adjusting brakes . . . . . .8-21
Service manual order form . . . . . .9-22
Servicing air conditioner. . . . . .4-27
Setting button . . . . . .4-7
Shifting
Continuously Variable Transmission (CVT) . . . . . .5-17
Manual transmission . . . . . .5-20
Shift lock release. . . . . .5-18
Shoulder belt height adjustment . . . . . .1-15
Side air bag system (See supplemental side air bag and curtain side-impact air bag system) . . . . . .1-49
Spark plug replacement . . . . . .8-16
Speedometer . . . . . .2-3
Spotlights (See map light) . . . . . .2-46
SRS warning label . . . . . .1-51
Starting
Before starting the engine. . . . . .5-13
Jump starting . . . . . .6-8
Precautions when starting and driving . . . .5-2
Push starting . . . . . .6-10
Starting the engine . . . . . .5-14, 5-15
Steering
Power steering system . . . . . .5-29
Steering wheel audio control switch . . . . . .4-65
Stop light . . . . . .8-30
Storage . . . . . .2-33
Storage tray . . . . . .2-33
Sunglasses case. . . . . .2-35
Sunglasses holder . . . . . .2-35
Sunroof (see Moonroof) . . . . . .2-42
Sun visors . . . . . .3-28
Supplemental air bag warning labels . . . . . .1-51
Supplemental air bag warning light . . .1-51, 2-17
Supplemental front impact air bag system . . .1-44
Supplemental restraint system
Information and warning labels . . . . . .1-51
Precautions on supplemental restraint system . . . . . .1-36
Supplemental restraint system (Supplemental air bag system) . . . . . .1-36
Supplemental side and curtain side-impact air bag system . . . . . .1-49

Switch
Autolight switch . . . . . .2-27
Automatic power window switch . . . . . .2-41
Fog light switch . . . . . .2-29
Hazard warning flasher switch . . . . . .6-2
Headlight and turn signal switch . . . . . .2-26
Headlight control switch . . . . . .2-26
Ignition switch . . . . . .5-8
Power door lock switch . . . . . .3-5
Rear window defroster switch . . . . . .2-25
Turn signal switch . . . . . .2-29
Vehicle dynamic control (VDC) off switch. . . . . .2-31
Windshield wiper and washer switch . . .2-24

## T

Tachometer . . . . . .2-5
Temperature gauge
Engine coolant temperature gauge . . . . .2-6
Theft (NISSAN vehicle immobilizer system), engine start . . . . . .2-23, 3-4, 5-10, 5-13
Three-way catalyst . . . . . .5-2
Tire
Flat tire . . . . . .6-3
Spare tire . . . . . .6-5, 8-42
Tire and Loading Information label . . . . .9-13
Tire chains . . . . . .8-39
Tire placard. . . . . .9-13
Tire pressure . . . . . .8-32
Tire rotation. . . . . .8-39
Types of tires . . . . . .8-38
Uniform tire quality grading . . . . . .9-18
Wheels and tires. . . . . .8-32
Wheel/tire size. . . . . .9-9
Tire pressure
Low tire pressure warning light . . . . . .2-14
Tire Pressure Monitoring System (TPMS) . . . .5-3
Towing
Flat towing . . . . . .9-18
Tow truck towing. . . . . .6-11
Trailer towing . . . . . .9-18
Transmission
Continuously Variable Transmission (CVT) fluid . . . . . .8-11
Driving with Continuously Variable Transmission (CVT) . . . . . .5-16
Driving with manual transmission . . . . . .5-19
Shift selector lock release. . . . . .5-18
Travel (See registering your vehicle in another country). . . . . .9-11
Trip computer . . . . . .2-7
Trip odometer . . . . . .2-4
Trunk lid lock opener lever. . . . . .3-24
Trunk light . . . . . .2-46
Turn signal switch . . . . . .2-29

## U

Uniform tire quality grading . . . . . .9-18
USB interface
Audio file operation . . . . . .4-53, 4-55

## V

Vanity mirror . . . . . .3-29
Variable voltage control system. . . . . .8-16
Vehicle dimensions and weights . . . . . .9-10
Vehicle dynamic control (VDC) off switch . . .2-31
Vehicle dynamic control (VDC) system. . . . .5-32
Vehicle identification. . . . . .9-11
Vehicle identification number (VIN) (Chassis number) . . . . . .9-11
Vehicle identification number (VIN) plate. . . .9-11
Vehicle loading information . . . . . .9-14
Vehicle recovery . . . . . .6-14
Vehicle security system . . . . . .2-21
Vehicle security system (NISSAN vehicle immobilizer system), engine start . .2-23, 3-4, 5-10, 5-13
Ventilators . . . . . .4-16
Visors . . . . . .3-28
Voice Prompt Interrupt . . .4-72, 4-86, 4-95, 4-96
Voice recognition system . . . . . .4-101

## W

Warning
Air bag warning light . . . . . .1-51, 2-17
Anti-lock brake warning light . . . . . .2-13
Battery charge warning light . . . . . .2-14
Brake warning light . . . . . .2-13
Door open warning light. . . . . .2-14
Engine oil pressure warning light . . . . . .2-14
Hazard warning flasher switch . . . . . .6-2
Low fuel warning light . . . . . .2-14
Low tire pressure warning light . . . . . .2-14
Low windshield-washer fluid warning light . . . . . .2-16
Passenger air bag and status light . . . . .1-45
Seat belt warning light. . . . . .2-17
Vehicle security system . . . . . .2-21
Warning/indicator lights and audible reminders. . . . . .2-12
Warning labels (for SRS) . . . . . .1-51

Warning lights . . . . . .2-12
Washer switch
Windshield wiper and washer switch . . .2-24
Weights (See dimensions and weights) . . . .9-10
Wheels and tires. . . . . .8-32
Wheel/tire size. . . . . .9-9
When traveling or registering your vehicle in
another country . . . . . .9-11
Windows
Locking passengers' windows . . . . . .2-41
Power rear windows. . . . . .2-41
Power windows . . . . . .2-39
Rear power windows . . . . . .2-41
Windshield-washer fluid. . . . . .8-12
Windshield wiper and washer switch . . . . .2-24
Wiper
Windshield wiper and washer switch . . .2-24
Wiper blades. . . . . .8-18

## RECOMMENDED FUEL:

Use unleaded regular gasoline with an octane rating of at least 87 AKI (Anti-Knock Index) number (Research octane number 91).

**⚠ CAUTION**

- **Using a fuel other than that specified could adversely affect the emission control system, and may also affect the warranty coverage.**
- **Under no circumstances should a leaded gasoline be used, because this will damage the three-way catalyst.**
- **Do not use E-15 or E-85 fuel in your vehicle. Your vehicle is not designed to run on E-15 or E-85 fuel. Using E-15 or E-85 fuel in a vehicle not specifically designed for E-15 or E-85 fuel can adversely affect the emission control devices and systems of the vehicle. Damage caused by such fuel is not covered by the NISSAN new vehicle limited warranty.**
- **U.S. government regulations require ethanol dispensing pumps to be identified by a small, square, orange and black label with the common abbreviation or the appropriate percentage for that region.**

For additional information, see “Recommended fluids/lubricants and capacities” in the “Technical and consumer information” section.

## RECOMMENDED ENGINE OIL:

- Engine oil with API Certification Mark
- Viscosity SAE 0W-20

See “Engine oil and oil filter recommendations” in the “Technical and consumer information” section of this manual.

## COLD TIRE PRESSURE:

See Tire and Loading Information label.

The label is typically located on the driver side center pillar or on the driver’s door. For additional information, see “Wheels and tires” in the “Maintenance and do-it-yourself” section of this manual.

## RECOMMENDED NEW VEHICLE BREAK-IN PROCEDURE:

During the first 1,200 mi (2,000 km) of vehicle use, follow the recommendations outlined in the “Break-in schedule” information found in the “Starting and driving” section of this manual. Follow these recommendations for the future reliability and economy of your new vehicle. Failure to follow these recommendations may result in vehicle damage or shortened engine life.

Printing : February 2014 (3)
Publication No.: OM14E 0B17U1
Printed in U.S.A.

B17-D