Foreword

Welcome to the growing group of value-conscious people who drive Toyotas. We are proud of the advanced engineering and quality construction of each vehicle we build.

This Owner's Manual explains the features of your new Toyota. Please read it and follow the instructions carefully so that you can enjoy many years of safe motoring.

When it comes to service, remember that your Toyota dealer knows your vehicle best and is interested in your complete satisfaction. He will provide quality maintenance and any other assistance you may require.

Please leave this Owner's Manual in this vehicle at the time of resale. The next owner will need this information also.

All information and specifications in this manual are current at the time of printing. However, because of Toyota's policy of continual product improvement, we reserve the right to make changes at any time without notice.

Please note that this manual applies to all models and explains all equipment, including options. Therefore, you may find some explanations for equipment not installed on your vehicle.

TOYOTA MOTOR CORPORATION

© 1999 TOYOTA MOTOR CORPORATION

All rights reserved. This material may not be reproduced or copied, in whole or in part, without the written permission of Toyota Motor Corporation.

New vehicle warranty

Your new vehicle is covered by the following Toyota limited warranties:

- New vehicle warranty
- Emission control systems warranty
- Others

For further information, please refer to the ”Owner’s Warranty Information Booklet” or ”Owner’s Manual Supplement”.

Your responsibility for maintenance

It is the owner’s responsibility to make sure that the specified maintenance is performed. Section 6 gives details of these maintenance requirements. Also included in Section 6 is general maintenance. For scheduled maintenance information, please refer to the ”Scheduled Maintenance Guide” or ”Owner’s Manual Supplement”.

Accessories, spare parts and modification of your Toyota

A wide variety of non-genuine spare parts and accessories for Toyota vehicles are currently available in the market. You should know that Toyota does not warrant these products and is not responsible for their performance, repair, or replacement, or for any damage they may cause to, or adverse effect they may have on, your Toyota vehicle.

This vehicle should not be modified with non-genuine Toyota products. Modification with non-genuine Toyota products could affect its performance, safety or durability, and may even violate governmental regulations. In addition, damage or performance problems resulting from the modification may not be covered under warranty.

Spark ignition system of your Toyota

The spark ignition system in your Toyota meets all requirements of the Canadian Interference-Causing Equipment Standard.

Installation of a mobile two-way radio system

As the installation of a mobile two-way radio system in your vehicle could affect electronic systems such as multiport fuel injection system/sequential multiport fuel injection system, cruise control system, anti-lock brake system, SRS airbag system and seat belt pretensioner system, be sure to check with your Toyota dealer for precautionary measures or special instructions regarding installation.

Scrapping of your Toyota

The SRS airbag and seat belt pretensioner devices in your Toyota contain explosive chemicals. If the vehicle is scrapped with the airbags and pretensioners left as they are, this may cause an accident such as fire. Be sure to have the systems of the SRS airbag and seat belt pretensioner removed and disposed of by the qualified service shop or by your Toyota dealer before you dispose of your vehicle.

On-pavement and off-road driving tips

This vehicle belongs to the utility vehicle class. Utility vehicles have a significantly higher rollover rate than other types of vehicles. This vehicle will handle and maneuver differently from an ordinary passenger car because it is designed for off-road use also. In addition, this vehicle has a higher ground clearance and center of gravity than that of an ordinary passenger car. This vehicle design feature causes this type of vehicle to be more likely to rollover. Failure to operate this vehicle correctly may result in loss of control, accidents or vehicle rollover causing death or serious injury. Be sure to read “Off-road vehicle precautions” in Section 2 and “Off-road driving precautions” in Section 3.

Automatic Transmission Overdrive Switch

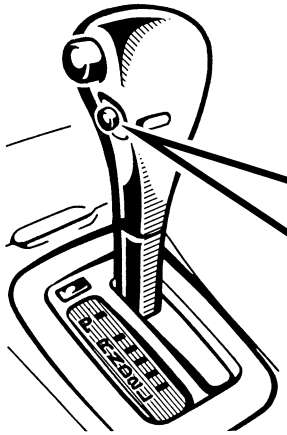

Overdrive switch for selecting either a three-speed or four-speed transmission

ON position (shifting into overdrive possible)

OFF position (shifting into overdrive not possible)

O/D OFF

"O/D OFF" indicator light shows the overdrive switch is in "OFF" position

After starting your engine, always turn the overdrive switch on.

Even during ordinary driving, keep the overdrive switch turned on. (At this time, the "O/D OFF" indicatior light on the instrument cluster will be off.)

Always turn the overdrive switch on for better fuel economy and quieter driving.

For details, see "Automatic transmission" in Section 1-6 on pages 97 to 100 and "How to save fuel and make your vehicle last longer, too" in Section 3 on pages 164 to 165.

X16021

Important information about this manual

Safety and vehicle damage warnings

In this manual, you will see CAUTION and NOTICE warnings. These are used in the following ways:

⚠ CAUTION

This is a warning against something which may cause injury to people if the warning is ignored. You are informed what you must or must not do in order to avoid or reduce the risk to yourself and other people.

NOTICE

This is a warning against something which may cause damage to the vehicle or its equipment if the warning is ignored. You are informed what you must or must not do in order to avoid or reduce the risk of damage to your vehicle and its equipment.

Safety symbol

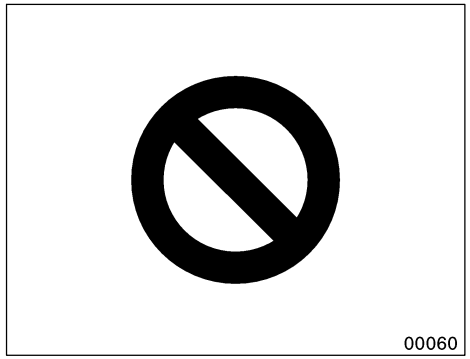

In this manual, you will also see a circle with a slash through it. This means ”Do not”, ”Do not do this”, or ”Do not let this happen”.

SECTION 1 - 1

OPERATION OF INSTRUMENTS AND CONTROLS

Overview of instruments and controls

Instrument panel overview 2
Instrument cluster overview 4
Indicator symbols on the instrument panel 5

Instrument panel overview

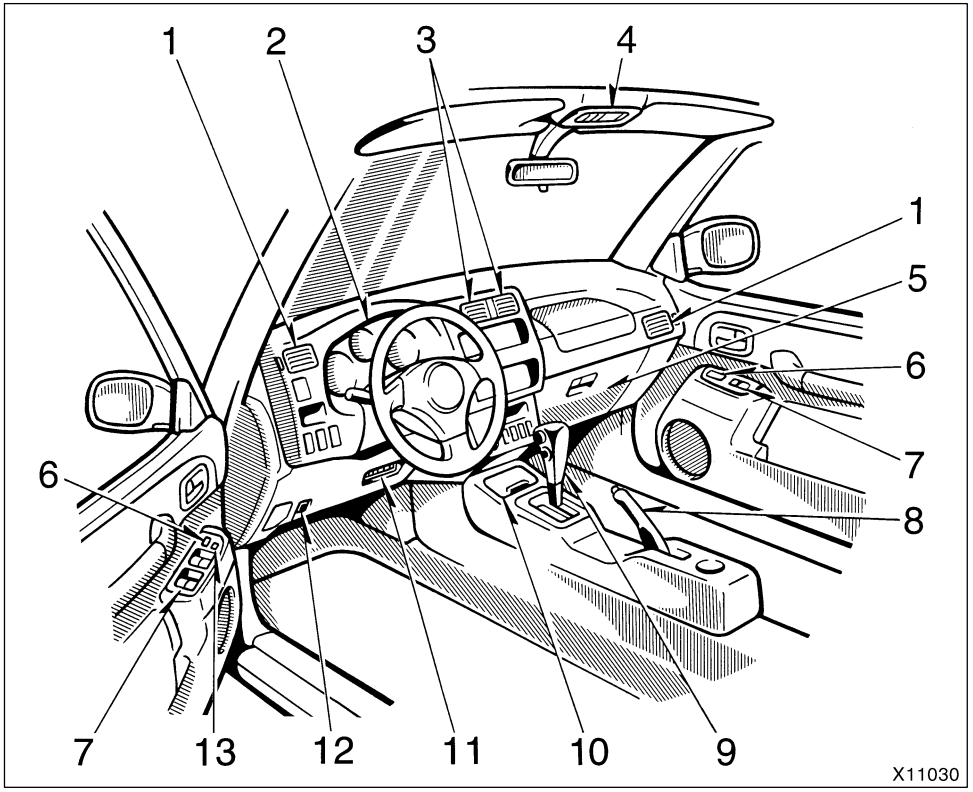

1. Side vents
2. Instrument cluster
3. Center vents
4. Electric moon roof switch and personal lights
5. Glove box
6. Power door lock switches (with power windows)
7. Power window switches
8. Parking brake lever
9. Automatic transmission selector lever or manual transmission gear shift lever
10. Ashtray
11. Lower vent
12. Hood lock release lever
13. Window lock switch

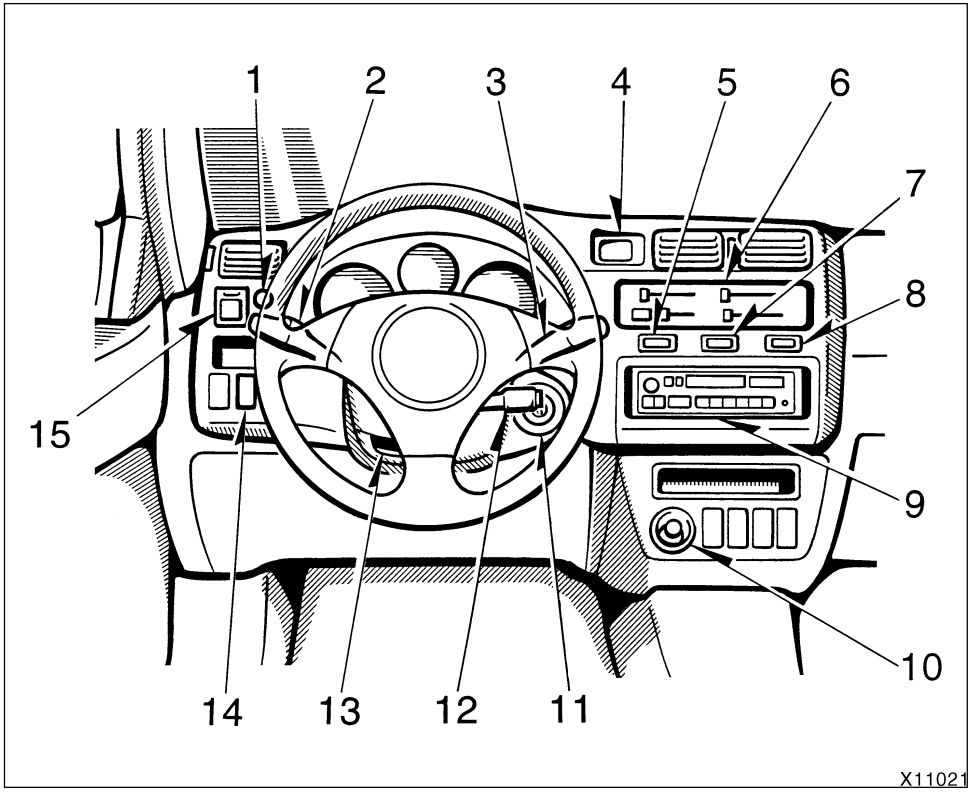

1. Instrument panel light control knob
2. Headlight and turn signal switch
3. Wiper and washer switches
4. Clock
5. Center differential lock button or driving pattern selector button
6. Air conditioning controls
7. Emergency flasher switch
8. Rear window defogger switch
9. Car audio
10. Cigarette lighter
11. Ignition switch
12. Cruise control switch
13. Tilt steering lock release lever
14. Power door lock switch (without power windows)
15. Power rear view mirror control switch

Instrument cluster overview

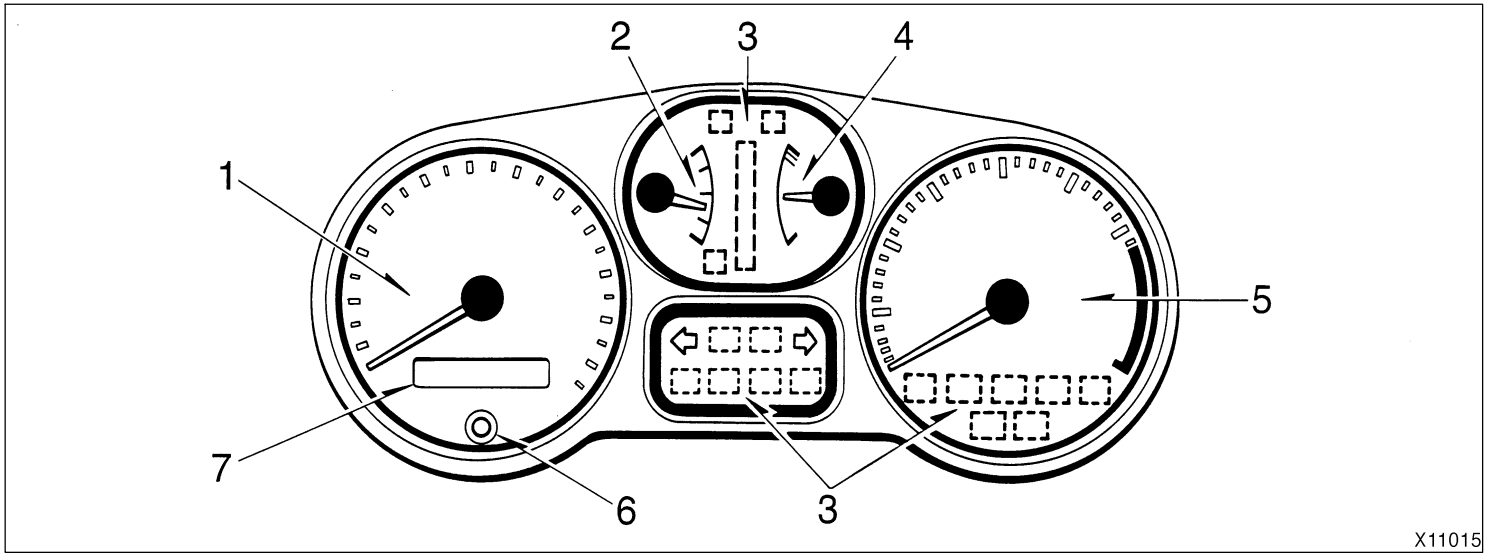

1. Speedometer
2. Fuel gauge
3. Service reminder indicators and indicator lights
4. Engine coolant temperature gauge
5. Tachometer
6. Trip meter reset knob
7. Odometer and two trip meters

Indicator symbols on the instrument panel

BRAKE (type A) (type B)	Brake system warning light*1
	Seat belt reminder light*1
	Discharge warning light*1
	Low oil pressure warning light*1
CHECK (type A) (type B)	Malfunction indicator lamp*1
	Low fuel level warning light*1

ABS (type A) (type B)	Anti-lock brake system warning light*1
	Open door warning light*1
	SRS warning light*1
A/T OIL TEMP	Automatic transmission fluid temperature warning light*1
	Low windshield washer fluid level warning light*1
	Turn signal indicator lights
	Headlight high beam indicator light

P R N D 2 L	Automatic transmission indicator light
O/D OFF	Overdrive-off indicator light
ECT PWR	Driving pattern indicator light
C.DIFF LOCK	Center differential lock indicator light
CRUISE	Cruise control indicator light*2

*1: For details, see "Service reminder indicators and warning buzzers" in Section 1-5.

*2: If this light flashes, see "Cruise control" in Section 1-6.

SECTION 1-2

OPERATION OF INSTRUMENTS AND CONTROLS

Keys and Doors

Keys 8
Side doors 8
Power windows 11
Quarter window 13
Back door and tailgate 13
Hood 14
Fuel tank cap 15
Electric moon roof 16
Detachable sun roof 17
Soft-top 21

Keys

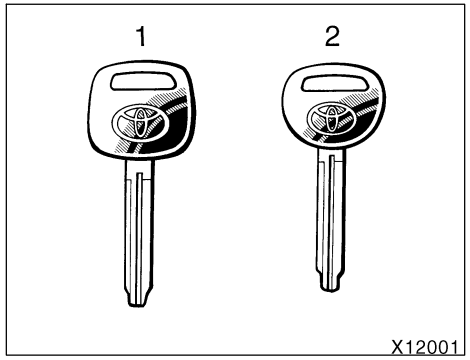

Your vehicle is supplied with two kinds of keys.

1. Master key—This key works in every lock.
2. Sub key—This key will not work in the glove box.

To protect things locked in the glove box when you have your vehicle parked, leave the sub key with the attendant.

Since the side doors, back door (hardtop) and tailgate (soft-top) can be locked without a key, you should always carry a spare master key in case you accidentally lock your keys inside the vehicle.

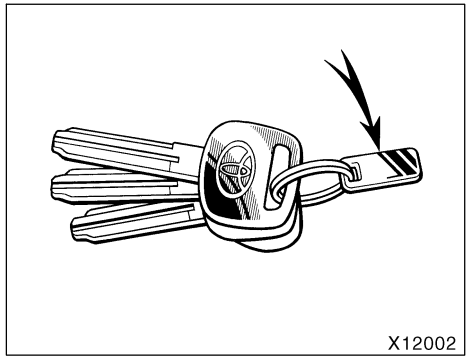

KEY NUMBER PLATE

Your key number is shown on the plate. Keep the plate in a safe place such as your wallet, not in the vehicle.

If you should lose your keys or if you need additional keys, duplicates can be made by a Toyota dealer using the key number.

We recommend you to write down the key number and keep it in safe place.

Side doors

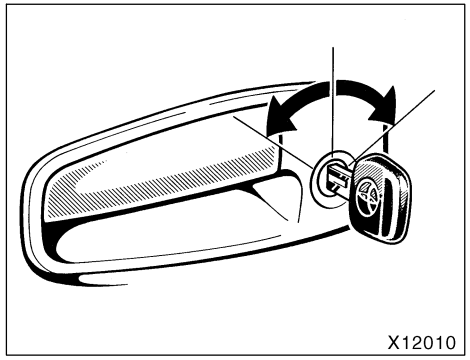

LOCKING AND UNLOCKING WITH KEY

Insert the key into the keyhole and turn it.

To lock: Turn the key forward.
To unlock: Turn the key backward.

Vehicles with power door lock system—All the side doors, back door (hardtop) and tailgate (soft-top) lock and unlock simultaneously with either front door. In the driver's door lock, turning the key once will unlock the driver's door and twice in succession will unlock all the side doors, back door (hardtop) and tailgate (soft-top) simultaneously.

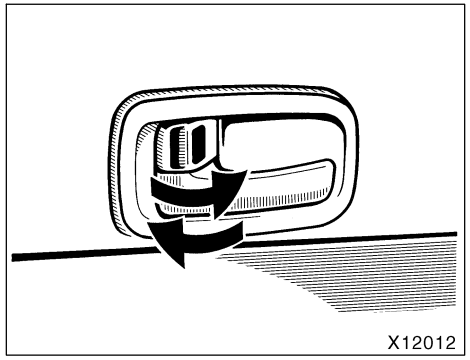

LOCKING AND UNLOCKING WITH INSIDE LOCK KNOB

Move the lock knob.

To lock: Push the knob forward.
To unlock: Pull the knob backward.

Closing the door with the lock knob in the lock position will also lock the door. Be careful not to lock your keys in the vehicle.

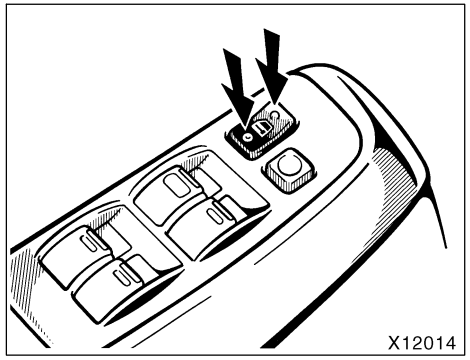

With power windows (driver's side)

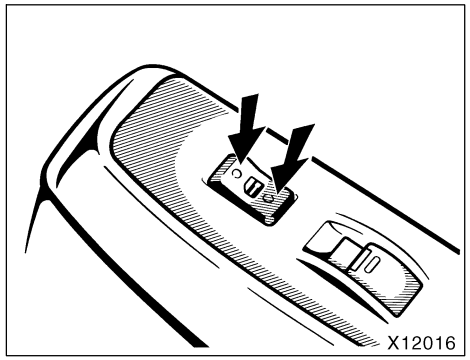

With power windows (passenger's side)

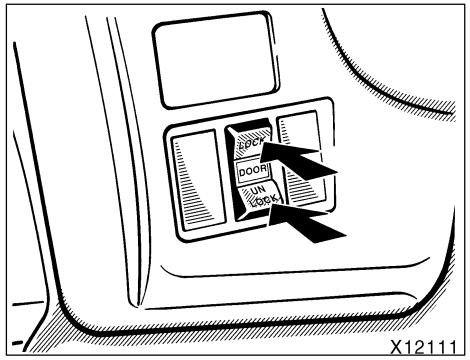

Without power windows

LOCKING AND UNLOCKING WITH POWER DOOR LOCK SWITCH

Push the switch.

With power windows—

To lock: Push the switch on the front side.
To unlock: Push the switch on the rear side.

Without power windows—

To lock: Push the switch on the "LOCK" side.
To unlock: Push the switch on the "UNLOCK" side.

Operating the switch simultaneously locks or unlocks all the side doors, back door (hardtop) and tailgate (soft-top).

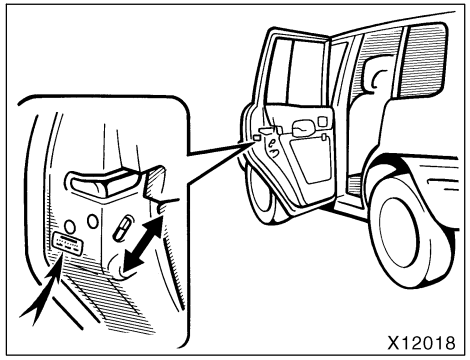

REAR DOOR CHILD-PROTECTORS

Move the lock lever to the "LOCK" position as shown on the label.

This feature allows you to lock a rear door so it can be opened from the outside only, not from inside. We recommend using this feature whenever small children are in the vehicle.

⚠ CAUTION

Before driving, be sure that the doors are closed and locked, especially when small children are in the vehicle. Along with the proper use of seat belts, locking the doors helps prevent the driver and passengers from being thrown out from the vehicle during an accident. It also helps prevent the doors from being opened unintentionally.

Power windows

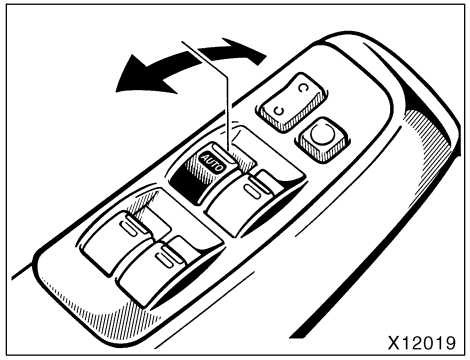

The windows can be operated with the switch on each side door.

The power windows work when the ignition switch is in the ”ON” position.

Key off operation: If the driver’s door is closed, they work for 45 seconds even after the ignition switch is turned off. They stop working when the driver’s door is opened.

OPERATING THE DRIVER’S WINDOW

Use the switch on the driver’s door.

Normal operation: The window moves as long as you hold the switch.

To open: Lightly push down the switch.
To close: Lightly pull up the switch.

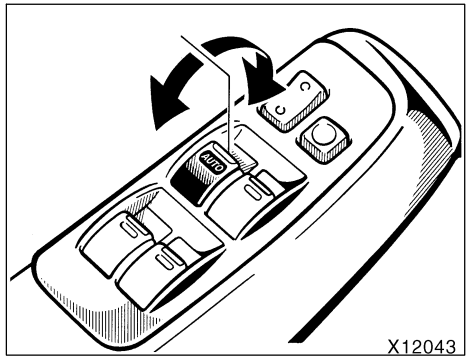

Automatic operation: Push the switch completely down or pull it completely up, and then release it. The window will fully open or close. To stop the window partway, lightly move the switch in the opposite direction and then release it.

Jam protection function: During automatic closing operation, the window stops and opens half way if something gets caught between the window and window frame.

If the window receives a strong impact, this function may work even if nothing is caught.

⚠ CAUTION

- Never try jamming any part of your body to make the jam protection function work intentionally.
- The jam protection function may not work if something gets caught just before the window is fully closed.

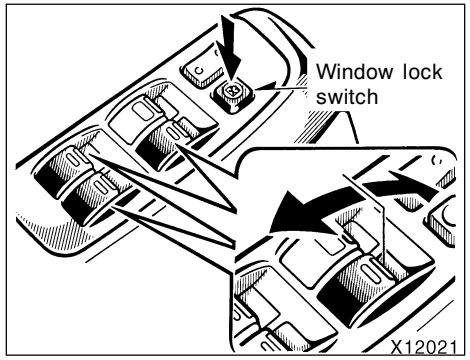

OPERATING THE PASSENGERS' WINDOWS

Use the switch on each passengers' door or the switches on the driver's door that control each passengers' window.

The window moves as long as you hold the switch.

To open: Push down the switch.
To close: Pull up the switch.

If you push in the window lock switch on the driver's door, the passengers' windows cannot be operated.

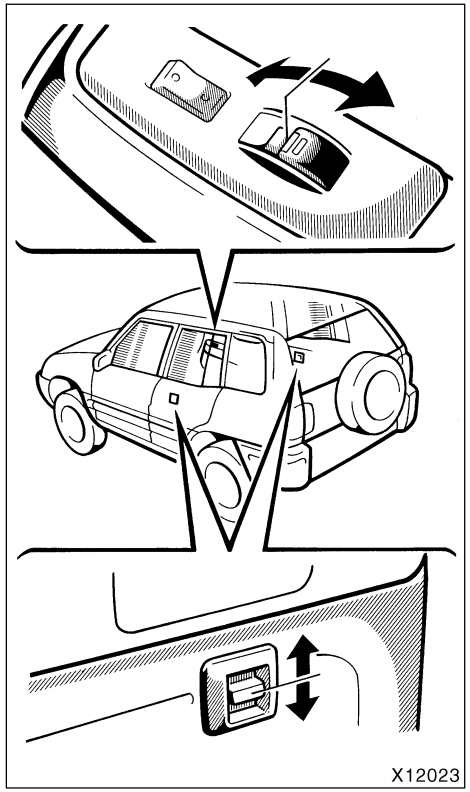

⚠ CAUTION

To avoid serious personal injury, you must do the following.

- Always make sure the head, hands and other parts of the body of all occupants are kept completely inside the vehicle before you close the power windows. If someone's neck, head or hands gets caught in a closing window, it could result in a serious injury. When anyone closes the power windows, be sure that they operate the windows safely.
- When small children are in the vehicle, never let them use the power window switches without supervision. Use the window lock switch to prevent them from making unexpected use of the switches.
- Never leave small children alone in the vehicle, especially with the ignition key still inserted. They could use the power window switches and get trapped in a window. Unattended children can become involved in serious accidents.

Quarter window (2-door hardtop)

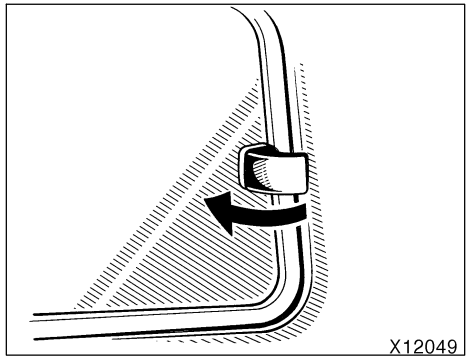

To open the quarter window, pull the latch handle toward you and swing it fully out.

When closing the window, make sure it is completely closed.

⚠ CAUTION

When the quarter windows are opened, observe the following:

- Depending on driving conditions, e.g. driving the vehicle with the front windows slightly open, you may smell exhaust fumes in the vehicle. If so, close the quarter windows.

Back door (hardtop) and tailgate (soft-top)

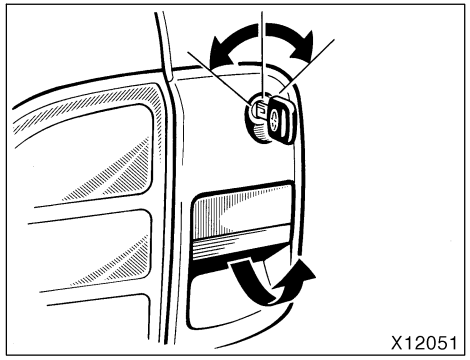

LOCKING AND UNLOCKING WITH KEY

Insert the key into the keyhole and turn it.

To lock: Turn the key counterclockwise.
To unlock: Turn the key clockwise.

When closing the back door (hardtop) or tailgate (soft-top), make sure it is fully closed.

See "Luggage stowage precautions" in Section 2 for precautions to observe in loading luggage.

⚠ CAUTION

- Keep the back door (hardtop) or tailgate (soft-top) closed while driving. This not only keeps the luggage from being thrown out but also prevents exhaust gases from entering the vehicle.
- If the open back door (hardtop) or tailgate (soft-top) hides the rear stop and tail lights or rear turn signal lights while you are parked, other road users must be warned of the presence of your vehicle by a warning triangle or other device.

Hood

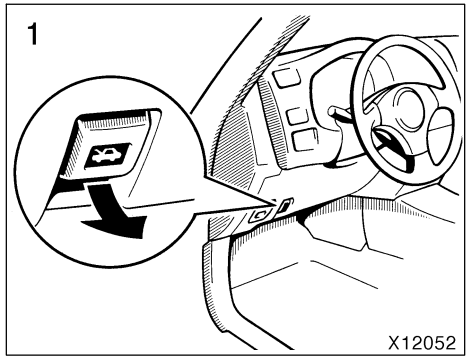

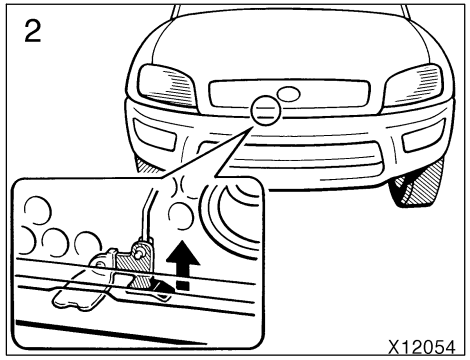

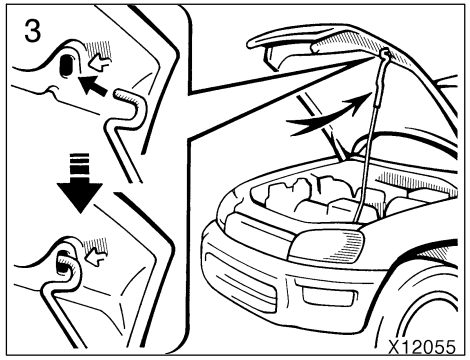

To open the hood:

1. Pull the hood lock release lever. The hood will spring up slightly.

⚠ CAUTION

Before driving, be sure that the hood is closed and securely locked. Otherwise, the hood may open unexpectedly while driving and an accident may occur.

2. In front of the vehicle, pull up the auxiliary catch lever and lift the hood.

3. Hold the hood open by inserting the support rod into the slot.

Before closing the hood, check that you have not forgotten any tools, rags, etc. and return the support rod to its clip—this prevents rattles. Then lower the hood until it is about 20 cm (8 in.) above the engine compartment and release it. If the hood is still not fully closed, lift and release the hood again. After closing the hood, make sure it is securely locked.

If you notice while driving that the hood is not securely locked, stop the vehicle at once and close the hood.

⚠ CAUTION

- Right after driving the support rod may be hot, so only touch the part coated with nylon.
- After inserting the rod into the slot, make sure the rod supports the hood securely from falling down on to your head or body.
- When closing the hood, be careful not to get your hands caught between the hood and the vehicle body.

NOTICE

Do not press on the hood, or you may deform the hood.

Fuel tank cap

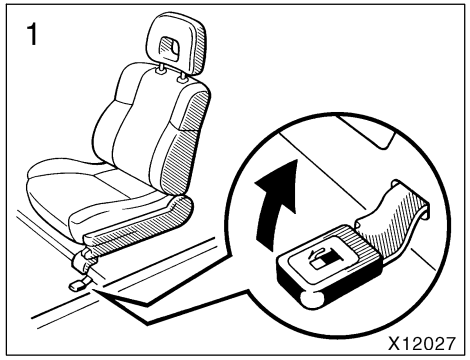

1. To open the fuel filler door, pull the lever up.

   When refueling, turn off the engine.

⚠ CAUTION

- Do not smoke, cause sparks or allow open flames when refueling. The fumes are flammable.
- When opening the cap, do not remove the cap quickly. In hot weather, fuel under pressure could cause injury by spraying out of the filler neck if the cap is suddenly removed.

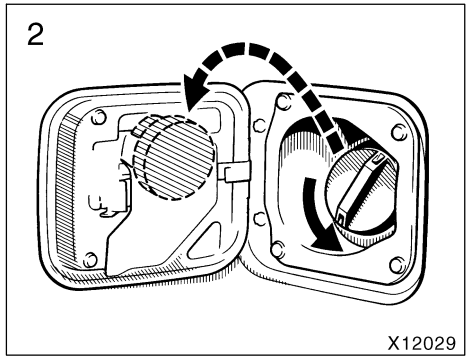

2. To remove the fuel tank cap, turn the cap slowly counterclockwise, then pause slightly before removing it. After removing the cap, hang it on the cap hanger.

It is not unusual to hear a slight swoosh when the cap is opened. When installing, turn the cap clockwise till you hear a click.

If the cap is not tightened securely, the malfunction indicator lamp comes on. Make sure the cap is tightened securely.

The indicator lamp goes off after driving several times. If the indicator lamp does not go off, contact your Toyota dealer as soon as possible.

Electric moon roof

⚠ CAUTION

- Make sure the cap is tightened securely to prevent fuel spillage in case of an accident.
- Use only a genuine Toyota fuel tank cap for replacement. It has a built-in check valve to reduce fuel tank vacuum.

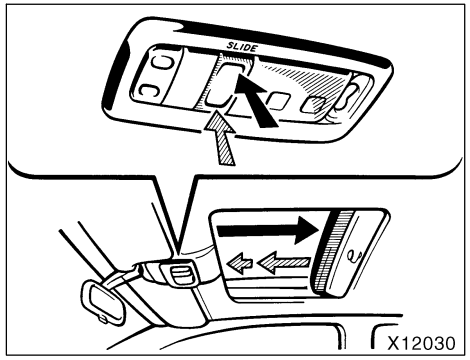

Sliding operation

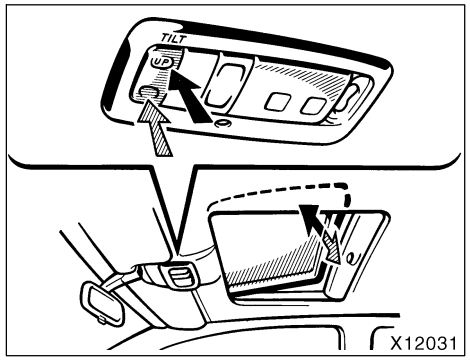

Tilting operation

To operate the moon roof, use the switches beside the personal light.

The key must be in the "ON" position.

Sun shade operation—

The sun shade can be opened or closed by hand.

Sliding operation—

To open: Push the switch on the "SLIDE" side.

The sun shade will be opened together with the roof.

To close: Push the switch on the opposite side of the "SLIDE" side.

As a precaution when closing, the roof stops at the three-quarters closed position before fully closing. Therefore, release the switch and then push it again to close it completely.

Tilting operation—

To tilt up: Push the switch on the "UP" side.
To lower: Push the switch on the opposite side of the "UP" side.

You may stop the moon roof at any desired position. The roof will move while the switch is being pushed and stop when released.

⚠ CAUTION

To avoid serious personal injury, you must do the following.

- While the vehicle is moving, always keep the head, hands and other parts of the body of all occupants away from the roof opening. Otherwise, you could be seriously injured if the vehicle stops suddenly or if the vehicle is involved in an accident.
- Always make sure nobody places his/her head, hands and other parts of the body in the roof opening before you close the roof. If someone's neck, head or hands gets caught in the closing roof, it could result in a serious injury. When anyone close the roof, first make sure it is safe to do so.
- Never leave small children alone in the vehicle, especially with the ignition key still inserted. They could use the moon roof switches and get trapped in the roof opening. Unattended children can become involved in serious accidents.
- Never sit on top of the vehicle around the roof opening.

Detachable sun roof—
—Sun roof precautions

⚠ CAUTION

To avoid serious personal injury, you must do the following.

- While the vehicle is moving, always keep the head, hands and other parts of the body of all occupants away from the roof opening. Otherwise, you could be seriously injured if the vehicle stops suddenly or if the vehicle is involved in an accident.
- Never sit on top of the vehicle around the roof opening.
- Never attempt to remove the sun roof panel while driving. Otherwise, the panel may become a hazard by falling into or flying off the vehicle.
- After installing the sun roof panel, make sure they are firmly secured by pushing up on the underside of each panel.
- Never put your hands between the sun roof panel and the surrounding roof.

—Tilting up and closing

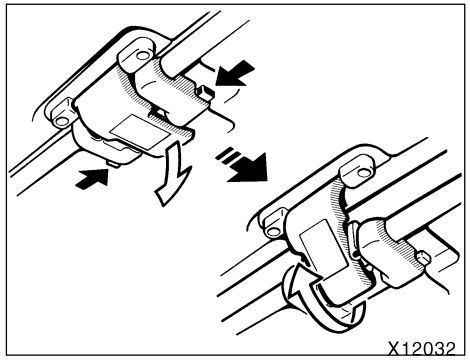

To tilt up the sun roof, first pull down on the handle while pushing in one of the lock buttons. Then push up the sun roof until it locks.

After tilting up the sun roof, make sure the handle is securely in place.

When closing the sun roof, slowly pull down the handle while supporting the roof with your hand. Close and lock the sun roof by pushing the handle until it clicks. Be sure to use your palm to push the handle. After closing the sun roof, make sure it is securely locked.

—Removing

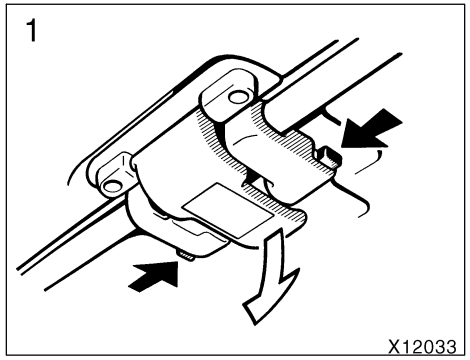

1. Pull the handle down while pushing in one of the lock buttons.

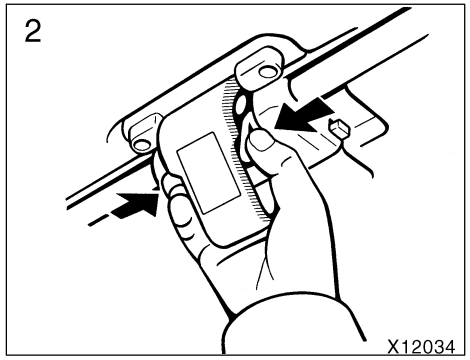

2. Push in the retaining spring arms as shown and push up the sun roof.

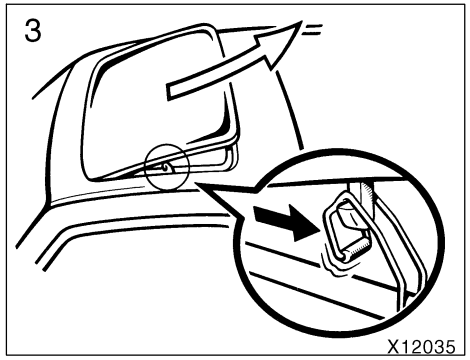

3. Push back the auxiliary catch to release it from the hook. Then lift the sun roof panel and pull it out.

—Stowing

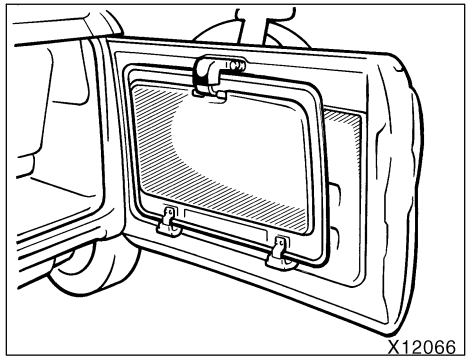

Install the removed sun roof panel on the tailgate as follows.

NOTICE
If the rear seats are reclined, return them to the upright position before closing the tailgate. Otherwise, they will interfere with the installed sun roof panel, possibly damaging the panel.

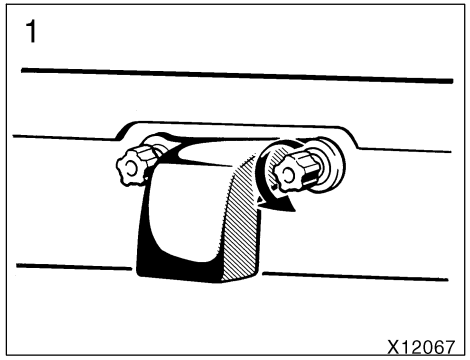

1. Remove the holder from the tailgate by turning the bolts counterclockwise.

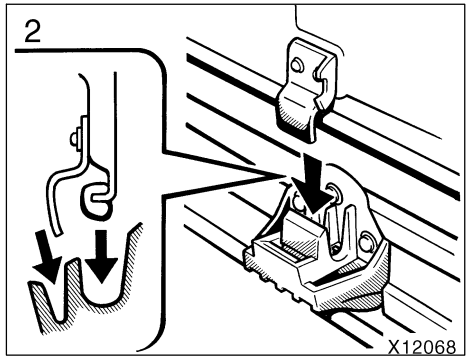

2. Set the front edge of the sun roof panel into the holders.

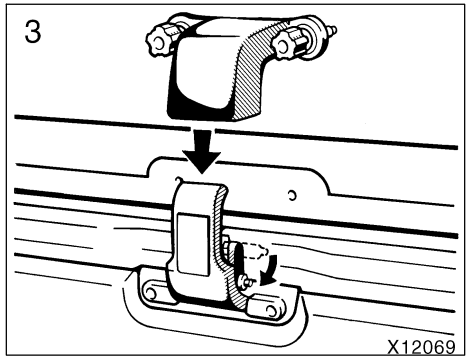

3. Place the removed holder over the sun roof handle.

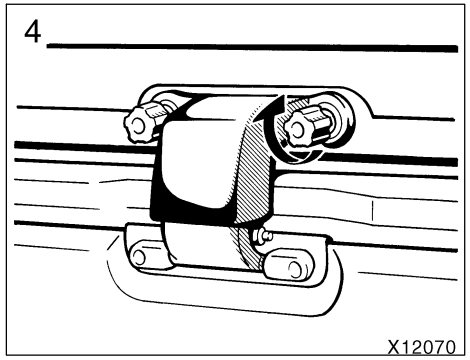

4. Secure the holder by turning the bolts clockwise.

NOTICE
Do not drive the vehicle without checking that the roof panel is securely attached to the tailgate.

—Installing

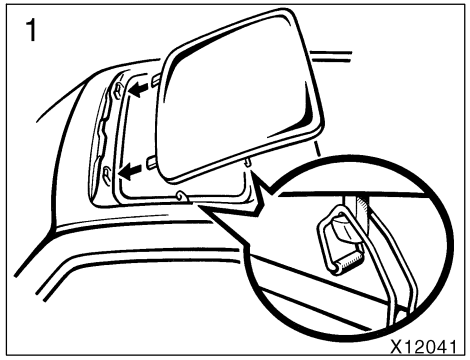

1. Insert the flat hinges of the sun roof panel into the hinge cases on the body. Then slowly lower it while holding the roof with your hands.

Make sure both flat hinges are inserted into the hinge cases.

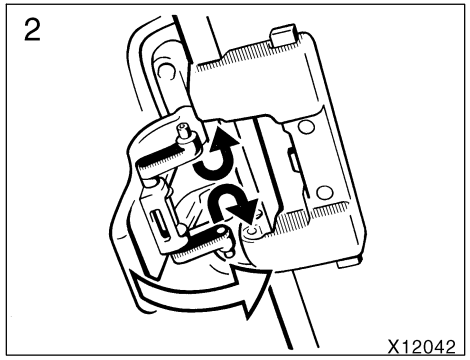

2. Press in the retaining spring arms and insert them into the holes. Then lock the sun roof by pushing the handle up with the palm of your hand until the handle clicks.

Soft-top—
—Soft-top precautions

⚠ CAUTION

To avoid serious personal injury, you must do the following.

- While the vehicle is moving, always keep the head, hands and other parts of the body of all occupants away from the soft-top opening. Otherwise, you could be seriously injured if the vehicle stops suddenly or if the vehicle is involved in an accident.
- Do not lower or raise the soft-top while the vehicle is moving. You may lose control and it may cause an accident.
- The vehicle should never be driven with the soft-top partially lowered. Make sure the top has been either fully latched to the roof or fully lowered before driving.
- When raising or lowering the soft-top, keep hands clear from any parts of the top linkage.
- Do not drive the vehicle only with the rear window removed because serious injury or death can result. The removed rear window may let the exhaust gases enter the vehicle. If you must drive with the rear window removed, broken or not fully sealed, you should immediately remove the quarter windows also to avoid exhaust gas filled up and as necessary have the window fixed immediately.
- Make sure no object overhangs the vehicle. The overhanging objects may cause an accident.

—Lowering the soft-top

NOTICE

- Make sure there are no items or packages between the rear seatback and the soft-top storage area when raising or lowering the soft-top. Even small items may interfere with soft-top operation and can cause damage.
- Do not sit or place excessive weight on the soft-top; when the top is up or down, damage may result.
- Do not raise or lower the soft-top when the temperature is below 0°C (32°F), or damage may result to the top material, rear window or quarter windows. If necessary to do so, warm the vehicle in a heated garage prior to operating the soft-top mechanism.
- Do not lower the soft-top if the top is damp or wet. Interior water damage, water stains or mildew of the top material may result.
- Do not bend the removed quarter and rear windows or hit them on a hard object. It may damage the removed windows.

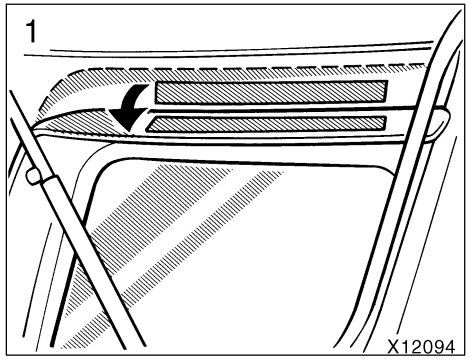

Before lowering the soft-top, make sure the soft-top is securely closed.

REMOVING THE QUARTER WINDOWS

1. Remove the Velcros on the top of the quarter window from the inside of the vehicle.

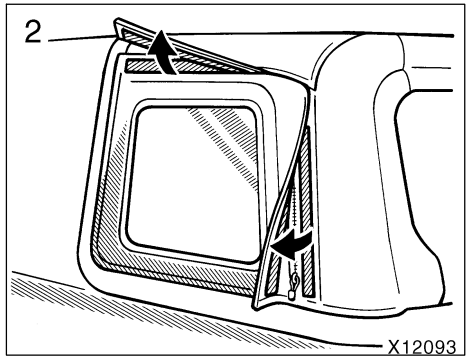

2. Remove the Velcros on the quarter window from the outside of the vehicle.

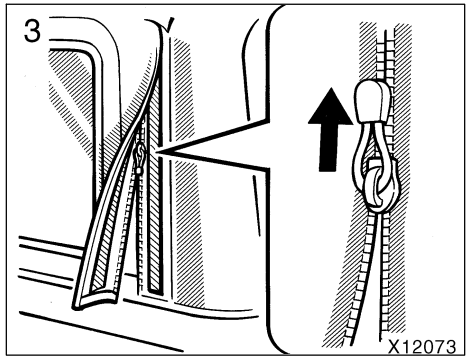

3. Unfasten the zippers.

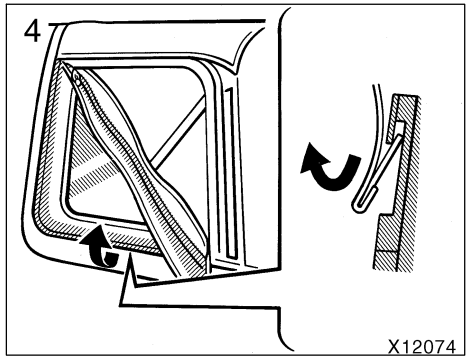

4. Remove the retainers on the bottom of the quarter windows from the groove.

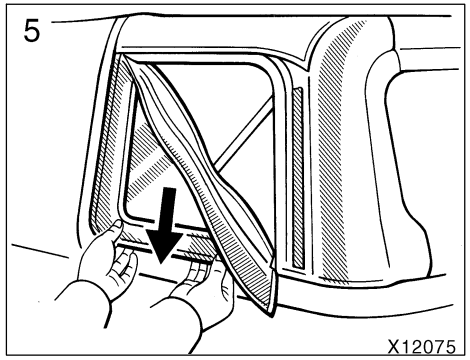

5. Slide down the window along the side groove.

NOTICE
Do not bend the removed quarter window or hit it on a hard object. It may damage the quarter window.

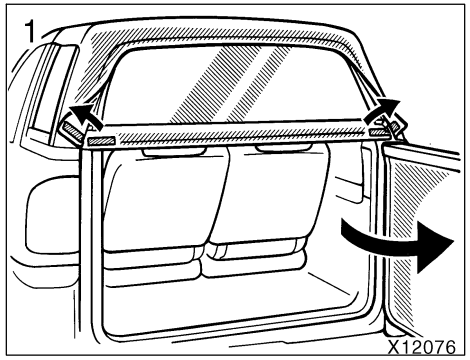

REMOVING THE REAR WINDOW

1. Open the tailgate, and remove the Velcros on the rear window.

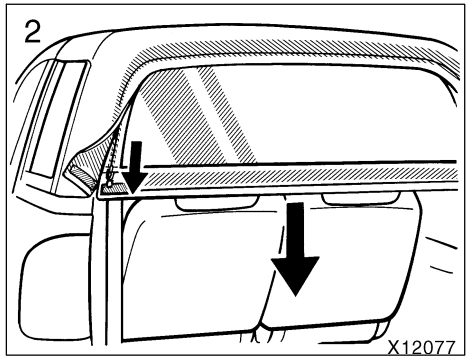

2. Unfasten the zippers and slide down the rear window.

NOTICE
Do not bend the removed rear window or hit it on a hard object. It may damage the rear window.

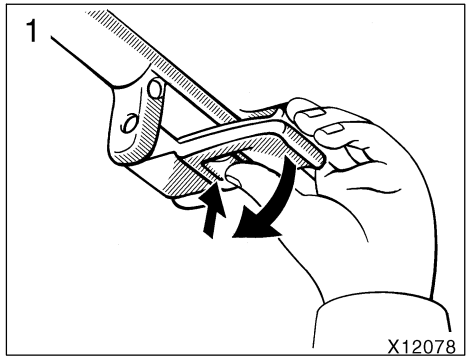

LOWERING THE SOFT-TOP

Before lowering the soft-top, make sure the quarter windows and rear window are already removed.

NOTICE
Lowering the soft-top without removing the quarter and rear window may cause damage to the soft-top.

1. While pressing the lock release button, pull down the latch handle.

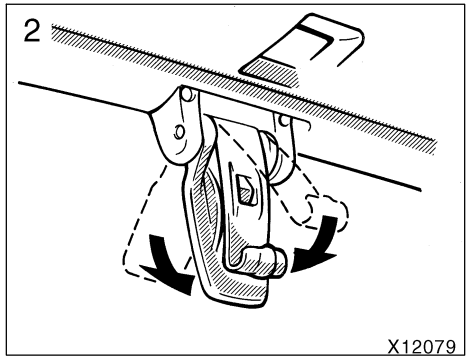

2. Lock the latch handle and hook.

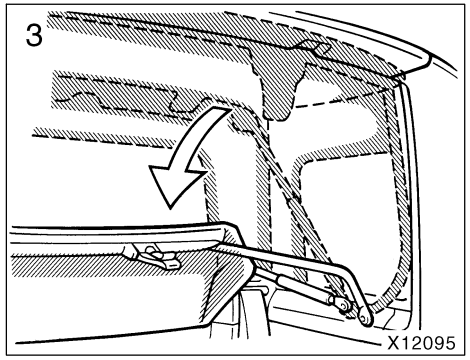

3. Fold the soft-top. Make sure to place the soft-top between the rear seat backs and tailgate.

⚠ CAUTION

With the soft-top opened, when the rear seat is in the reclined position or when reclining the rear seat, be careful not to damage the soft-top and not to get your head hit or injured by the latch handles.

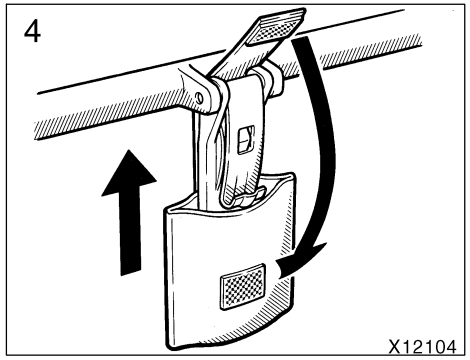

4. Take the latch handle cover out of the glove box, put it over the latch handle and fasten it securely with Velcros.

—Raising the soft-top

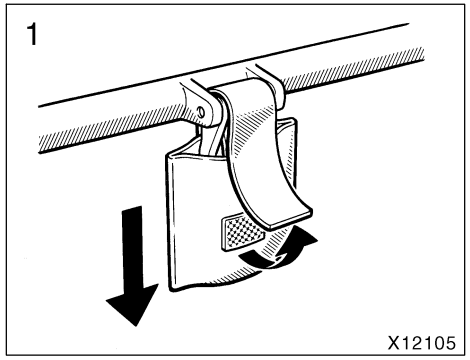

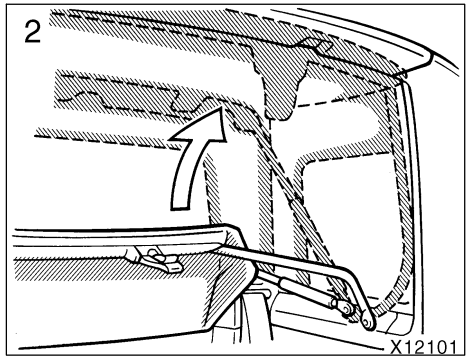

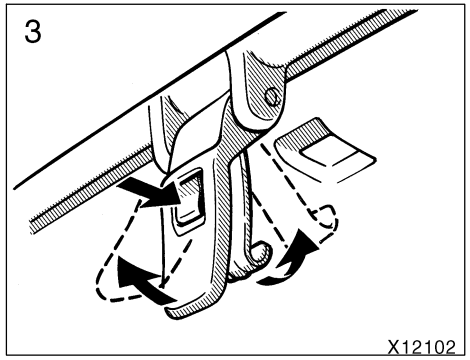

RAISING THE SOFT-TOP

1. Remove the latch handle cover.

   Store the removed cover in the glove box.

2. Raise the soft-top.

⚠ CAUTION

When raising the soft-top, keep hands clear from any parts of the top linkage.

3. Separate the latch handle and hook while pressing the lock release button.

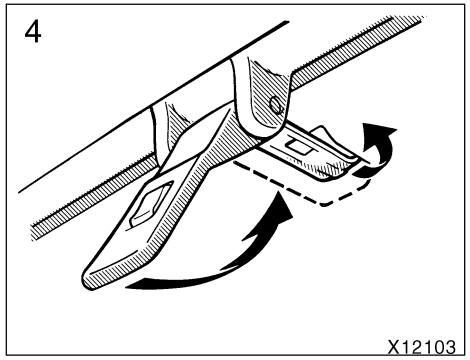

4. Set the hook, push up the latch handle to securely lock it.

⚠ CAUTION

- Try pushing and pulling the latch handle to make sure it is securely locked.
- Try pushing the soft-top forward and rearward to make sure it is securely locked.

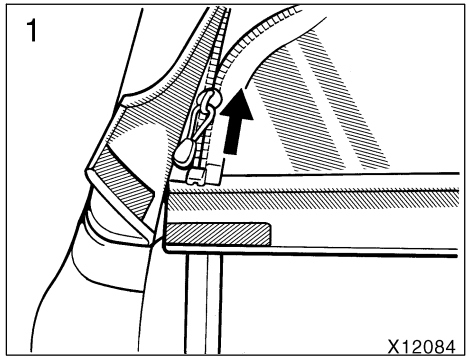

INSTALLING THE REAR WINDOW

1. Open the tailgate and engage the zipper approximately 25 mm (1.0 in.).

⚠ CAUTION

The rear window must be securely sealed to prevent exhaust gases from coming into the occupant compartment and causing serious personal injury or death.

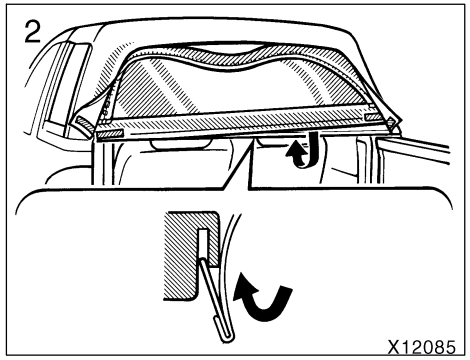

2. Align the retainer on the bottom of the window with the groove.

⚠ CAUTION

Make sure the retainer on the rear window is securely inserted into the groove.

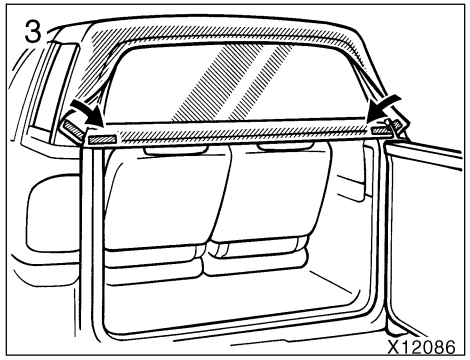

3. Fasten the zippers securely and align the Velcros to secure the rear window.

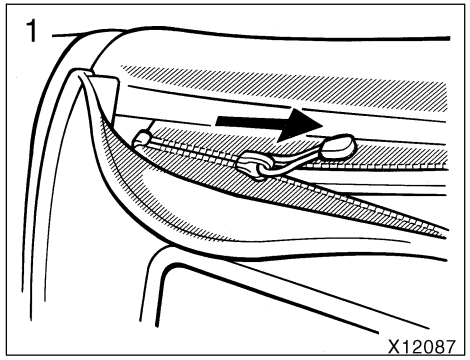

INSTALLING THE QUARTER WINDOWS

1. Engage the zipper approximately 25 mm (1.0 in.).

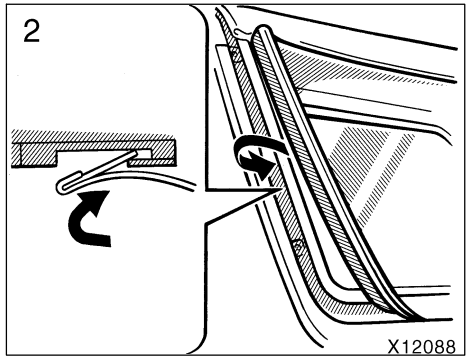

2. Insert the retainer on the side of the window into the groove on the vehicle side.

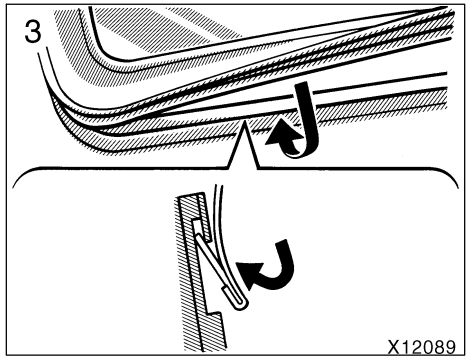

3. Insert the retainer on the bottom of the window into the groove.

⚠ CAUTION

Make sure the retainers on the side and bottom of the quarter window are securely inserted into the grooves.

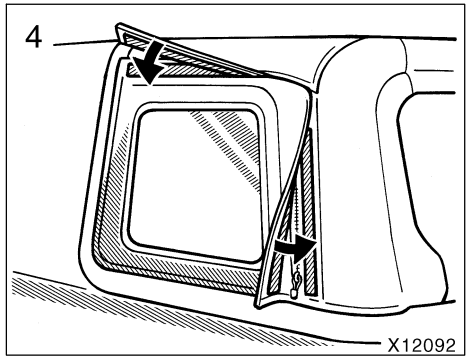

4. Fasten the zipper securely and align the Velcros to secure the quarter windows.

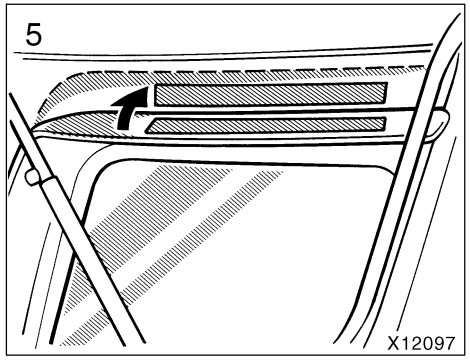

5. Align the Velcros from the inside of the vehicles.

SECTION 1 - 3

OPERATION OF INSTRUMENTS AND CONTROLS

Seats, Seat belts, Steering wheel and Mirrors

Seats 32
Front seats 32
Rear seats 34
Flattening seatbacks 38
Head restraints 40
Seat belts 41
SRS driver and front passenger airbags 50
Child restraint 57
Tilt steering wheel 74
Outside rear view mirrors 75
Anti-glare inside rear view mirror 76

Seats

While the vehicle is being driven, all vehicle occupants should have the seatback upright, sit well back in the seat and properly wear the seat belts provided.

⚠ CAUTION

- Do not drive the vehicle unless the occupants are properly seated. Do not allow sitting on top of a folded-down seatback, or in the luggage compartment. Persons not properly seated and/or properly restrained by seat belts can be severely injured in the event of emergency braking or a collision.
- During driving, do not allow passengers to stand up or move around between seats. Severe injuries can occur in the event of emergency braking or a collision.

Front seats—
—Seat adjustment precautions

Adjust the driver's seat so that the foot pedals, steering wheel and instrument panel controls are within easy reach of the driver.

⚠ CAUTION

- Adjustments should not be made while the vehicle is moving, as the seat may unexpectedly move and cause the driver to lose control of the vehicle.
- When adjusting the seat, be careful not to hit the seat against a passenger or luggage.
- After adjusting the seat position, try sliding it forward and backward to make sure it is locked in position.
- After adjusting the seatback, exert body pressure to make sure it is locked in position.
- Do not put objects under the seats. The objects may interfere with the seat-lock mechanism or unexpectedly push up the seat position adjusting lever; the seat may suddenly move, causing the driver to lose control of the vehicle.

- While adjusting the seat, do not put your hands under the seat or near the moving parts. You may catch and injure your hands or fingers.

—Adjusting front seats

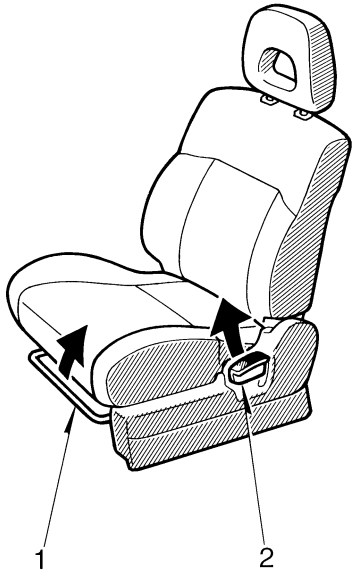

X13001

1. SEAT POSITION ADJUSTING LEVER

Pull the lever up. Then slide the seat to the desired position with slight body pressure and release the lever.

2. SEATBACK ANGLE ADJUSTING LEVER

Lean forward and pull the lever up. Then lean back to the desired angle and release the lever.

⚠ CAUTION

To reduce the risk of sliding under the lap belt during a collision, avoid reclining the seatback any more than needed. The seat belts provide maximum protection in a frontal or rear collision when the driver and the passenger are sitting up straight and well back in the seats. If you are reclined, the lap belt may slide past your hips and apply restraint forces directly to the abdomen. Therefore, in the event of a frontal collision, the risk of personal injury may increase with increasing recline of the seatback.

—Moving passenger's seat for rear seat entry (2-door hardtop and soft-top)

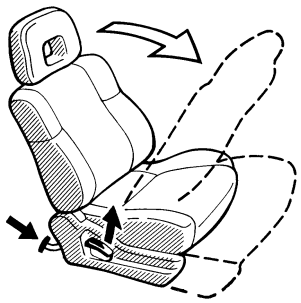

X13003

For easy access to the rear seat, do this.

1. Lift the seatback angle adjusting lever or press the pedal behind the seatback.

   The seat will slide forward.

2. Move the seat to the front-most position.

After passengers are in, lift up the seatback and return the seat until it locks.

Rear seats—
—Adjusting seatback angle

CAUTION

- After putting back the seat, try pushing the seat forward and rearward to make sure it is secured in place.
- Never allow anyone to rest their foot on the release pedal while the vehicle is moving.

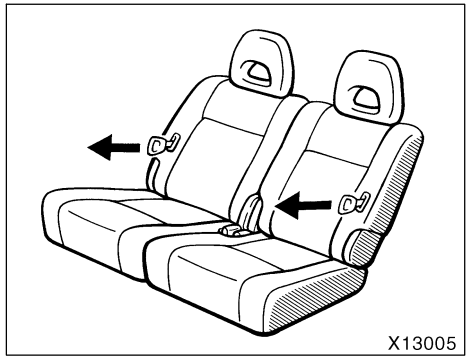

Lean forward and pull the lock release lever. Then lean back to the desired angle and release the lever.

CAUTION

- Adjustments should not be made while the vehicle is moving.
- To reduce the risk of sliding under the lap belt during a collision, avoid reclining the seatback any more than needed. The seat belts provide maximum protection in a frontal or rear collision when the passengers are sitting up straight and well back in the seats. If you are reclined, the lap belt may slide past your hips and apply restraint forces directly to the abdomen. Therefore, in the event of a frontal collision, the risk of personal injury may increase with increasing recline of the seatback.
- After adjusting the seatback, exert body pressure to make sure it is locked in position.

—Folding up rear seats (2-door hardtop and soft-top)

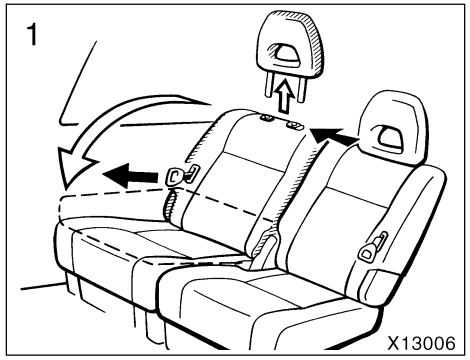

1. Remove the head restraint. Unlock the seatback and fold it down.

Folding up the rear seats will enlarge the luggage compartment. See "Luggage stowage precautions" in Section 2 for precautions in loading luggage.

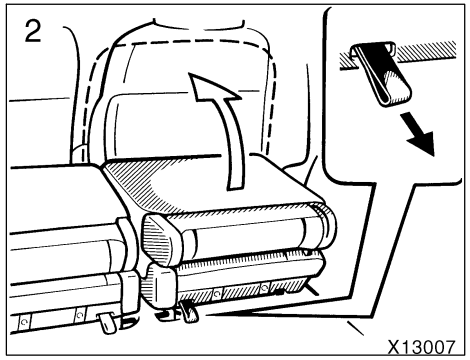

2. Unlock the seat cushion. Swing the whole seat up and forward.

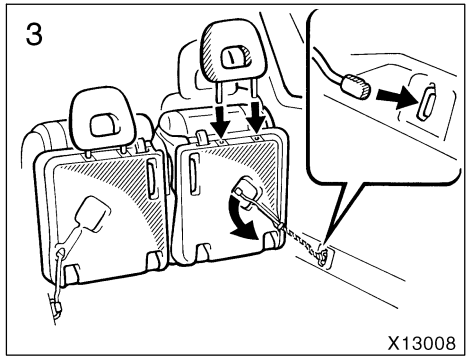

3. Lock the raised bottom cushion in place by attaching the support rod onto the hook. Then store the head restraint in the head restraint retaining holes in the bottom cushion.

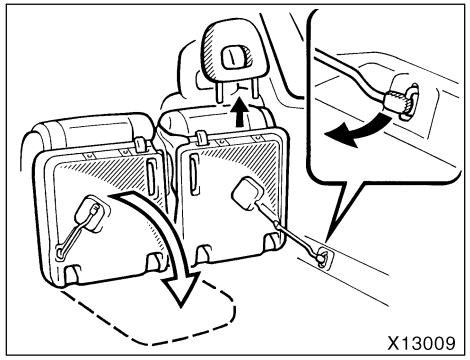

When returning the rear seat to its original position, first remove the head restraint. Unlock the seat and return it. Be certain to replace the head restraint.

⚠ CAUTION

When returning seats to their original position:

- Make sure the seat belts are not twisted or caught under the seat and are arranged in their proper position and are ready to use.
- Make sure the seat is securely locked by pushing forward and rearward on the top of the seatback or by trying to pull up the edge of the bottom cushion. Failure to do so will prevent seat belt from operating properly.

—Folding up rear seats (4-door hardtop)

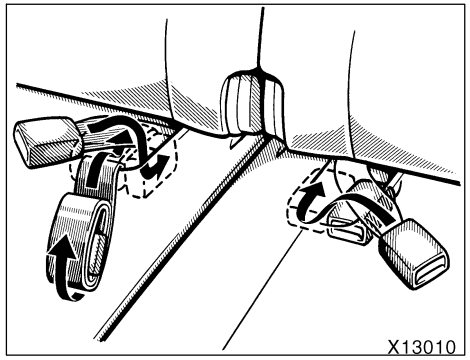

BEFORE FOLDING REAR SEAT

Stow the rear seat belt and buckles as shown in the illustration.

This prevents the belt and buckles from falling out when you fold the seatback.

NOTICE

The seat belt and buckles must be stowed before you fold the seatback.

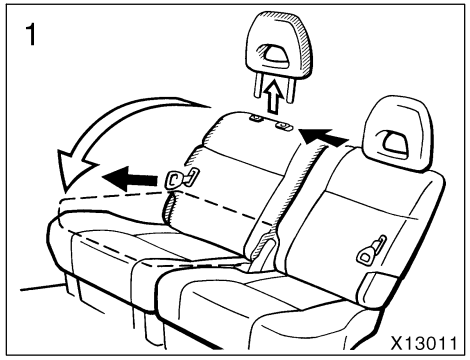

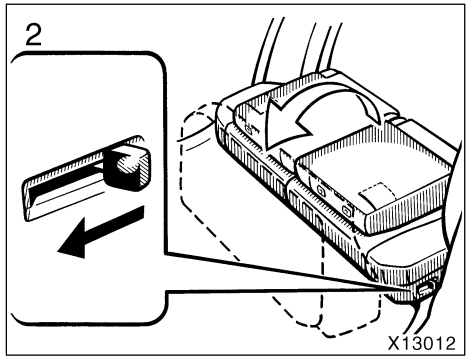

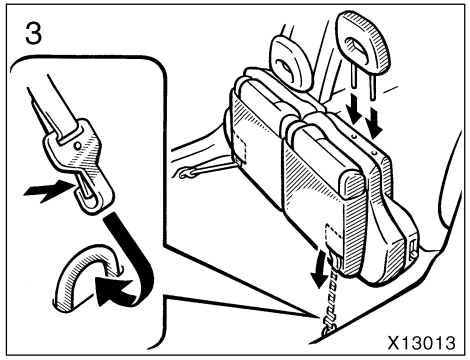

FOLDING REAR SEAT

1. Remove the head restraint. Unlock the seatback and fold it down.

Folding up the rear seats will enlarge the luggage compartment. See ”Luggage stowage precautions” in Section 2 for precautions in loading luggage.

2. Unlock the seat cushion. Swing the whole seat up and forward.

3. Lock the raised bottom cushion in place by clipping the strap to the hook. Then store the head restraint in the head restraint retaining holes in the bottom cushion.

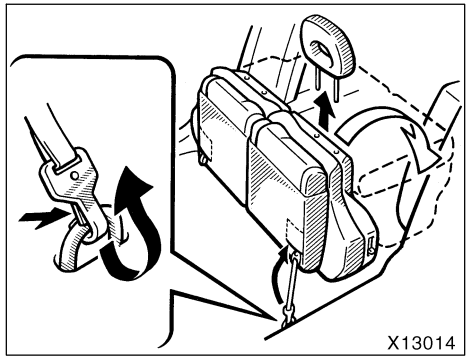

When returning the rear seat to its original position, first remove the head restraint. Unlock the seat and return it. Be certain to replace head restraint.

⚠ CAUTION

When returning seats to their original position:

- Make sure the seat belts are not twisted or caught under the seat and are arranged in their proper position and are ready to use.
- Make sure the seat is securely locked by pushing forward and rearward on the top of the seatback or by trying to pull up the edge of the bottom cushion. Failure to do so will prevent seat belt from operating properly.

Flattening seatbacks (2-door hardtop and soft-top)

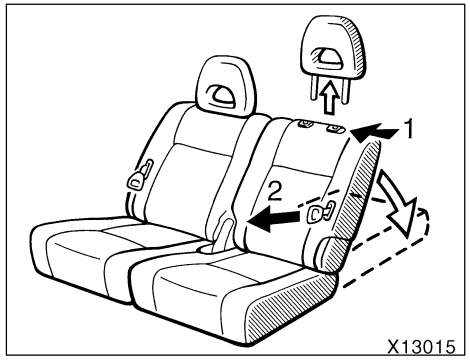

Rear seats

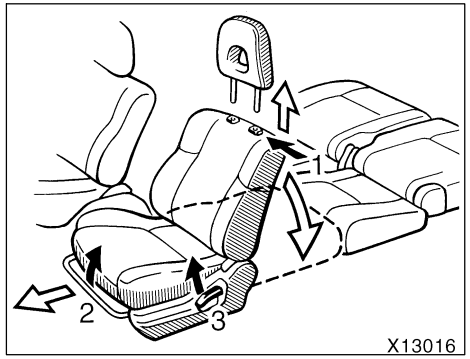

Front seats

Rear seats: Remove the head restraint. Then pull out the strap to unlock the seatback, and push down the seatback.

Front seats: Remove the head restraint and slide the seat to the front-most position. Push the seat further forward to release the slide-lock, and unlock and push down the seatback.

When returning the seatback upright, be careful not to make yourself hit by the seatback which will bound with considerable spring force.

After returning the seat to its original position, be certain to replace the head restraint.

⚠ CAUTION

- Do not allow passengers to ride on the flattened seat while driving; use the seat in the normal position.
- After putting back the seat, try pushing the seat and seatback forward and rearward to make sure it is secured in place. Be certain to replace head restraint.

NOTICE

Before closing the back door, make sure the rear headrests are removed from the flattened seats.

Flattening seatbacks (4-door hardtop)

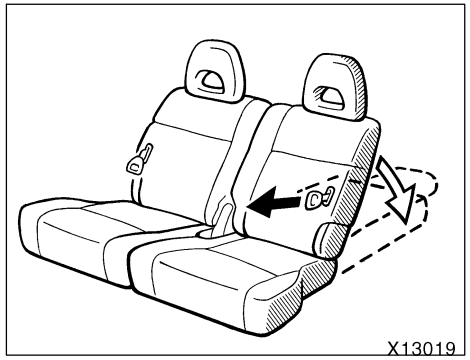

Rear seats

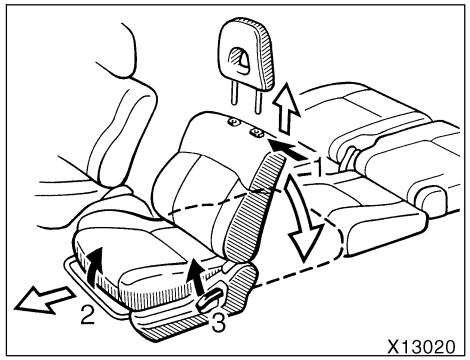

Front seats

Rear seats: Pull out the strap to unlock the seatback, and push down the seatback.

Front seats: Remove the head restraint and slide the seat to the front-most position. Push the seat further forward to release the slide-lock, and unlock and push down the seatback.

When returning the seatback upright, be careful not to make yourself hit by the seatback which will bound with considerable spring force.

After returning the seat to its original position, be certain to replace the head restraint.

⚠ CAUTION

- Do not allow passengers to ride on the flattened seat while driving; use the seat in the normal position.
- After putting back the seat, try pushing the seat and seatback forward and rearward to make sure it is secured in place. Be certain to replace head restraint.

Head restraints

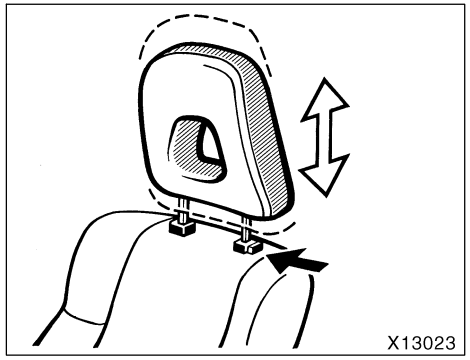

For your safety and comfort, adjust the head restraint before driving.

To raise: Pull it up.
To lower: Push it down while pressing the lock release button.

The head restraint is most effective when it is close to your head. Therefore, using a cushion on the seatback is not recommended.

⚠ CAUTION

- Adjust the center of the head restraint so that it is closest to the top of your ears.
- After adjusting the head restraint, make sure it is locked in position.
- Do not drive with the head restraints removed.

Seat belts—
—Seat belt precautions

Toyota strongly urges that the driver and passengers in the vehicle be properly restrained at all times with the seat belts provided. Failure to do so could increase the chance of injury and/or the severity of injury in accidents.

Child. Use a child restraint system appropriate for the child until the child becomes large enough to properly wear the vehicle's seat belts. See "Child restraint" for details.

If a child is too large for a child restraint system, the child should sit in the rear seat and must be restrained using the vehicle's seat belt. According to accident statistics, the child is safer when properly restrained in the rear seat than in the front seat.

If a child must sit in the front seat, the seat belts should be worn properly. If an accident occurs and seat belts are not worn properly, the force of the rapid inflation of the airbag may cause death or serious injury to the child.

Do not allow the child to stand up or kneel on either rear or front seats. An unrestrained child could suffer serious injury or death during emergency braking or a collision. Also, do not let the child sit on your lap. It does not provide sufficient restraint.

Pregnant woman. Toyota recommends the use of a seat belt. Ask your doctor for specific recommendations. The lap belt should be worn securely and as low as possible over the hips and not on the waist.

Injured person. Toyota recommends the use of a seat belt. Depending on the injury, first check with your doctor for specific recommendations.

⚠ CAUTION

Persons should ride in their seats properly wearing their seat belts whenever the vehicle is moving. Otherwise, they are much more likely to suffer serious bodily injury or death in the event of sudden braking or a collision.

When using the seat belts, observe the following:

- Use the belt for only one person at a time. Do not use a single belt for two or more people—even children.
- Avoid reclining the seatbacks too much. The seat belts provide maximum protection when the seatbacks are in the upright position. (Refer to the seat adjustment instructions.)
- Be careful not to damage the belt webbing or hardware. Take care that they do not get caught or pinched in the seat or side doors.

- Inspect the belt system periodically. Check for cuts, fraying, and loose parts. Damaged parts should be replaced. Do not disassemble or modify the system.
- Keep the belts clean and dry. If they need cleaning, use a mild soap solution or lukewarm water. Never use bleach, dye, or abrasive cleaners—they may severely weaken the belts. (See "Cleaning the interior" in Section 5.)
- Replace the belt assembly (including bolts) if it has been used in a severe impact. The entire assembly should be replaced even if damage is not obvious.

—Front seat belts and rear outside seat belts

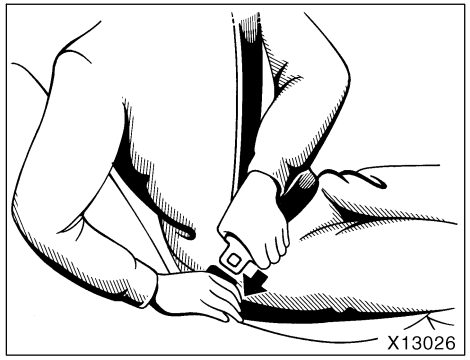

Adjust the seat as needed and sit up straight and well back in the seat. To fasten your belt, pull it out of the retractor and insert the tab into the buckle.

You will hear a click when the tab locks into the buckle.

The seat belt length automatically adjusts to your size and the seat position.

The retractor will lock the belt during a sudden stop or on impact. It also may lock if you lean forward too quickly. A slow, easy motion will allow the belt to extend, and you can move around freely.

If the seat belt cannot be pulled out of the retractor, firmly pull the belt and release it. You will then be able to smoothly pull the belt out of the retractor.

When a passenger's shoulder belt is completely extended and is then retracted even slightly, the belt is locked in that position and cannot be extended. This feature is used to hold the child restraint system securely. (For details, see "Child restraint" in this section.) To free the belt again, fully retract the belt and then pull the belt out once more.

⚠ CAUTION

- After inserting the tab, make sure the tab and buckle are locked and that the belt is not twisted.
- Do not insert coins, clips, etc. in the buckle as this may prevent you from properly latching the tab and buckle.
- If the seat belt does not function normally, immediately contact your Toyota dealer. Do not use the seat until the seat belt is fixed. It cannot protect an adult occupant or your child from injury.

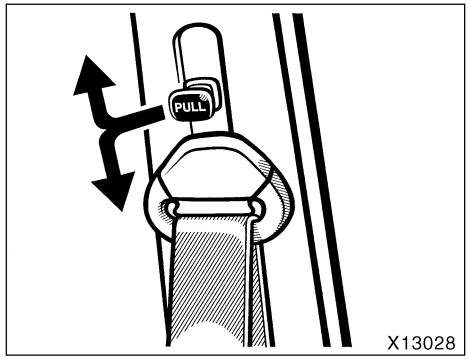

Seat belts with an adjustable shoulder anchor—

Adjust the shoulder anchor position to your size.

To adjust the anchor position, pull the knob out and slide it up or down. Release the knob and make sure the anchor is locked in position.

⚠ CAUTION

Always make sure the shoulder belt is positioned across the center of your shoulder. The belt should be kept away from your neck, but not falling off your shoulder. Failure to do so could reduce the amount of protection in an accident and cause serious injuries in a collision.

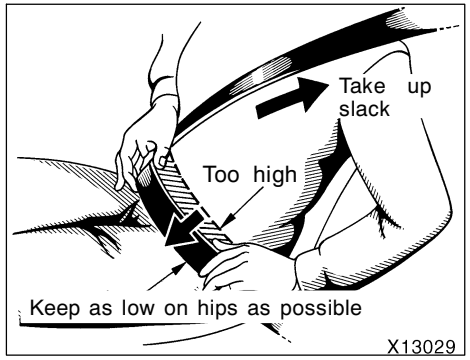

Adjust the position of the lap and shoulder belts.

Position the lap belt as low as possible on your hips—not on your waist, then adjust it to a snug fit by pulling the shoulder portion upward through the latch plate.

⚠ CAUTION

- High-positioned lap belts and loose-fitting belts both could cause serious injuries due to sliding under the lap belt during a collision or other unintended result. Keep the lap belt positioned as low on hips as possible.
- For your safety, do not place the shoulder belt under your arm.

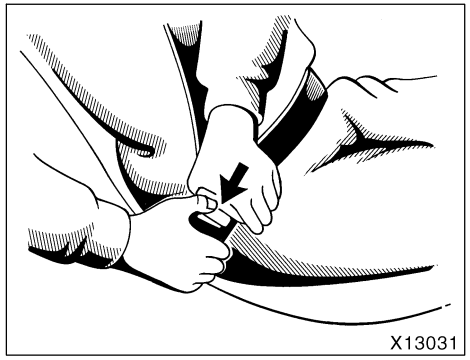

To release the belt, press the buckle-release button and allow the belt to retract.

If the belt does not retract smoothly, pull it out and check for kinks or twists. Then make sure it remains untwisted as it retracts.

—Rear center seat belt (4-door hardtop)

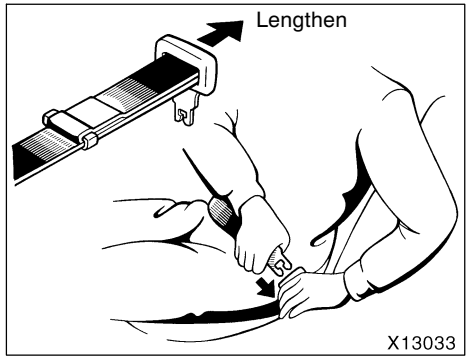

Sit up straight and well back in the seat. To fasten your belt, insert the tab into the buckle.

You will hear a click when the tab locks into the buckle.

If the belt is not long enough for you, hold the tab at a right angle to the belt and pull on the tab.

⚠ CAUTION

- After inserting the tab, make sure the tab and buckle are locked and that the belt is not twisted.
- Do not insert coins, clips, etc. in the buckle as this may prevent you from properly latching the tab and buckle.
- If the seat belt does not function normally, immediately contact your Toyota dealer. Do not use the seat until the seat belt is fixed. It cannot protect an adult occupant or your child from injury.

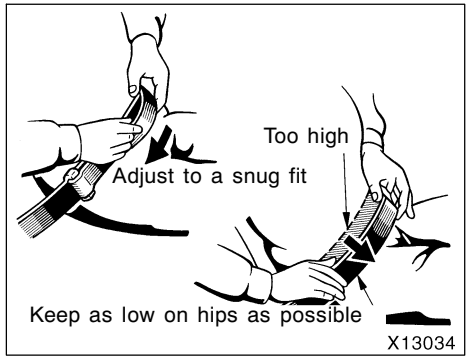

Remove excess length of the belt and adjust the belt position.

To shorten the belt, pull the free end of the belt.

Position the lap belt as low as possible on your hips—not on your waist, then adjust it to a snug fit.

⚠ CAUTION

High-positioned and loose-fitting lap belts could cause serious injuries due to sliding under the lap belt during a collision or other unintended result. Keep the lap belt positioned as low on hips as possible.

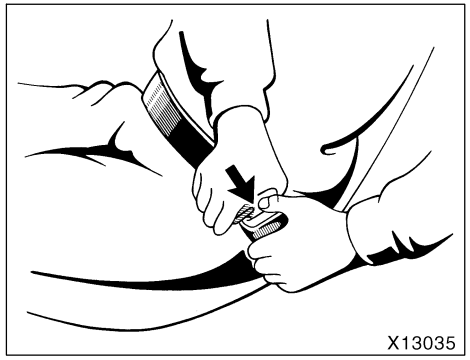

To release the belt, press the buckle-release button.

—Stowing the rear seat belt and buckles (4-door hardtop)

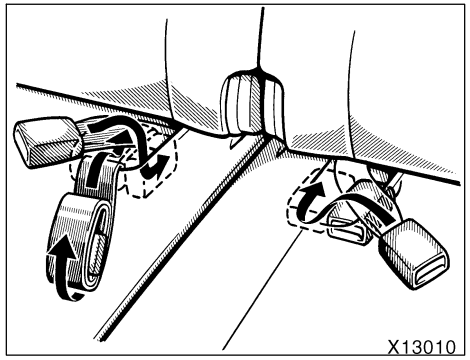

The rear seat belt and buckles can be stowed when not in use.

Seat belt and buckles must be stowed before you fold the seatback. (See "Rear seats—Folding up rear seats" in this section.)

—Seat belt extender

If your seat belt cannot be fastened securely because it is not long enough, a personalized seat belt extender is available from your Toyota dealer free of charge.

Please contact your local Toyota dealer so that the dealer can order the proper required length for the extender. Bring the heaviest coat you expect to wear for proper measurement and selection of length. Additional ordering information is available at your Toyota dealer.

⚠ CAUTION

When using the seat belt extender, observe the following. Failure to follow these instructions could result in less effectiveness of the seat belt restraint system in case of vehicle accident, increasing the chance of personal injury.

- Never use the seat belt extender if you can fasten the seat belt without it.
- Remember that the extender provided for you may not be safe when used on a different vehicle, or for another person or at a different seating position than the one originally intended for.

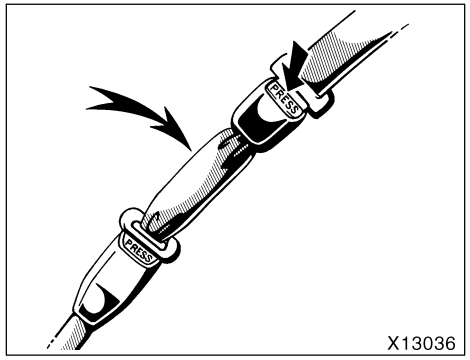

To connect the extender to the seat belt, insert the tab into the seat belt buckle so that the "PRESS" signs on the buckle-release buttons of the extender and the seat belt are both facing outward as shown.

You will hear a click when the tab locks into the buckle.

When releasing the seat belt, press on the buckle-release button on the extender, not on the seat belt. This helps prevent damage to the vehicle interior and extender itself.

When not in use, remove the extender and store in the vehicle for future use.

⚠ CAUTION

- After inserting the tab, make sure the tab and buckle are locked and that the seat belt extender is not twisted.
- Do not insert coins, clips, etc. in the buckle as this may prevent you from properly latching the tab and buckle.
- If the seat belt does not function normally, immediately contact your Toyota dealer. Do not use the seat until the seat belt is fixed. It cannot protect an adult occupant or your child from injury.

—Front seat belt pretensioners

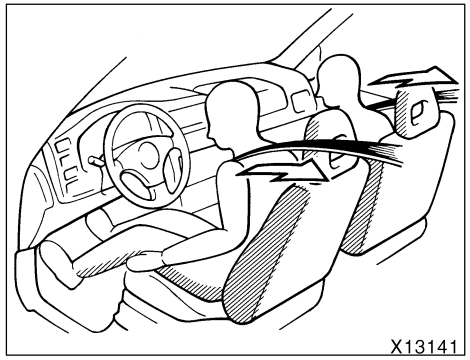

The driver and front passenger's seat belt pretensioners are designed to be activated in response to a severe frontal impact.

When the airbag sensor detects the shock of a severe frontal impact, the front seat belt is quickly drawn back in by the retractor so that the belt snugly restrains the front seat occupants.

The seat belt pretensioners are activated even with no passenger in the front seat.

Collisions occurring at certain speeds and angles may cause the seat belt pretensioners and SRS airbags not to operate all together.

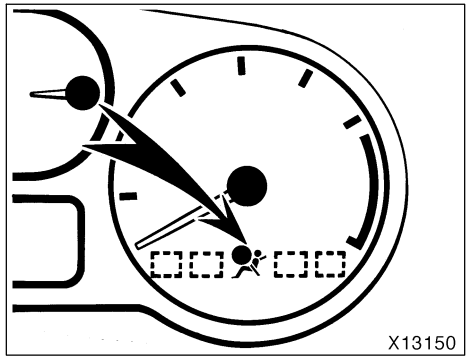

This indicator comes on when the ignition key is turned to the ”ACC” or ”ON” position. It goes off after about 6 seconds. This means the front seat belt pretensioners are operating properly.

This warning light system monitors the airbag sensor assembly, front airbag sensors, seat belt pretensioner assemblies, warning light, interconnecting wiring and power sources. (For details, see ”Service reminder indicators and warning buzzers” in Section 1-5.)

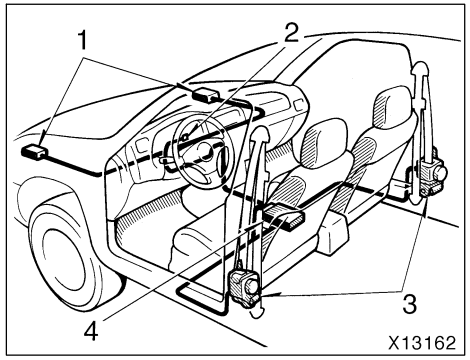

The seat belt pretensioner system mainly consists of the following components and their locations are shown in the illustration.

1. Front airbag sensors
2. SRS warning light
3. Seat belt pretensioner assemblies
4. Airbag sensor assembly

The seat belt pretensioner is controlled by the airbag sensor assembly. The airbag sensor assembly consists of a safing sensor and airbag sensor.

When a seat belt pretensioner is activated, an operating noise may be heard and a small amount of smoke-like gas may be released. This gas is harmless and does not indicate that a fire is occurring.

Once the seat belt pretensioner has been activated, the seat belt retractor remains locked.

⚠ CAUTION

Do not modify, remove, strike or open the front seat belt pretensioner assemblies, airbag sensor or surrounding area or wiring. Doing any of these may cause sudden operation of the front seat belt pretensioners or disable the system, which could result in serious injury.

Failure to follow these instructions can result in serious injuries.

NOTICE

Do not perform any of the following changes without consulting your Toyota dealer. Such changes can interfere with proper operation of the seat belt pretensioners in some cases.

- ◆Installation of electronic devices such as a mobile two-way radio, cassette tape player or compact disc player
- ◆Repairs on or near the front seat belt retractor assemblies
- ◆Modification of the suspension system
- ◆Modification of the front end structure
- ◆Attachment of a grille guard (bull bar, kangaroo bar, etc.), snowplow, winches or any other equipment to the front end
- ◆Repairs made on or near the front fenders, front end structure or console

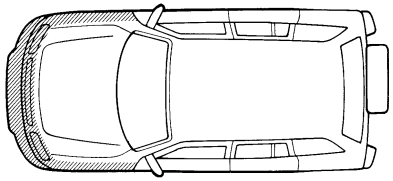

This front seat belt pretensioner system has a service reminder indicator to inform the driver of operating problems. If either of the following conditions occurs, this indicates a malfunction of the airbags or pretensioners. Contact your Toyota dealer as soon as possible to service the vehicle.

- The light does not come on when the ignition key is turned to the ”ACC” or ”ON” position, or the light remains on.
- The light comes on or flashes while driving.
- If either front seat belt does not retract or can not be pulled out due to a malfunction or activation of the pretensioner.
- The front seat belt pretensioner assembly or surrounding area has been damaged.
- The front part of the vehicle (shaded in the illustration) was involved in an accident that was not severe enough to cause the seat belt pretensioners to operate.
- The front seat belt pretensioner assembly is scratched, cracked, or otherwise damaged.

SRS driver and front passenger airbags

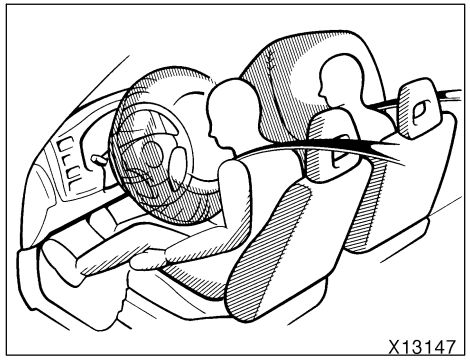

The SRS (Supplemental Restraint System) airbags are designed to provide further protection for the driver and front passenger in addition to the primary safety protection provided by the seat belts.

In response to a severe frontal impact, the SRS airbags work together with the seat belts to help reduce injury by inflating. The SRS airbags help to reduce injuries mainly to the driver's or front passenger's head or chest directly hitting the steering wheel or dashboard. The passenger airbag is activated even with no passenger in the front seat.

Be sure to wear your seat belt.

⚠ CAUTION

A driver or front passenger too close to the steering wheel or dashboard during airbag deployment can be killed or seriously injured. Toyota strongly recommends that:

- The driver sit as far back as possible from the steering wheel while still maintaining control of the vehicle.
- The front passenger sit as far back as possible from the dashboard.
- All vehicle occupants be properly restrained using the available seat belts.

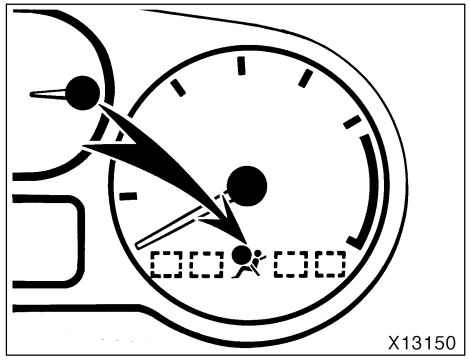

This indicator comes on when the ignition key is turned to the "ACC" or "ON" position. It goes off after about 6 seconds. This means the SRS airbags are operating properly.

This warning light system monitors the airbag sensor assembly, front airbag sensors, inflators, warning light, interconnecting wiring and power sources. (For details, see "Service reminder indicators and warning buzzers" in Section 1-5.)

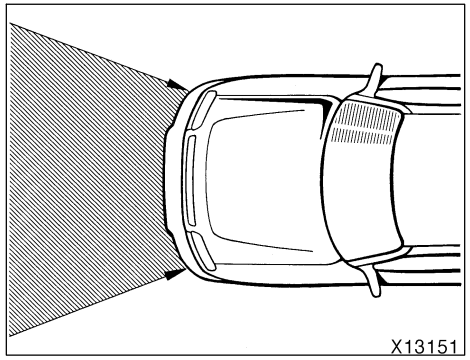

The SRS airbag system is designed to activate in response to a severe frontal impact within the shaded area between the arrows in the illustration.

The SRS airbags will deploy if the severity of the impact is above the designed threshold level, comparable to an approximate 25 km/h (15 mph) collision in the U.S.A. and 30 km/h (18 mph) collision in Canada when impacting straight into a fixed barrier that does not move or deform.

If the severity of the impact is below the above threshold level, the SRS airbags may not deploy.

However, this threshold velocity will be considerably higher if the vehicle strikes an object, such as a parked vehicle or sign pole, which can move or deform on impact, or if it is involved in an underride collision (e.g. a collision in which the nose of the vehicle ”underrides”, or goes under, the bed of a truck, etc.).

It is possible that in some collisions at the lower zone of airbag sensor detection and activation the SRS airbags and seat belt pretensioners will not operate all together.

For the safety of all occupants, always wear your seat belts.

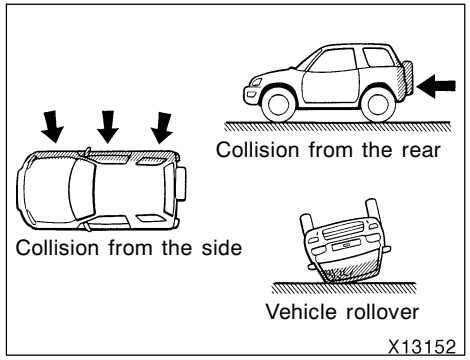

The SRS airbags are not designed to inflate if the vehicle is involved in a side or rear collision, if it rolls over, or if it is involved in a low-speed frontal collision.

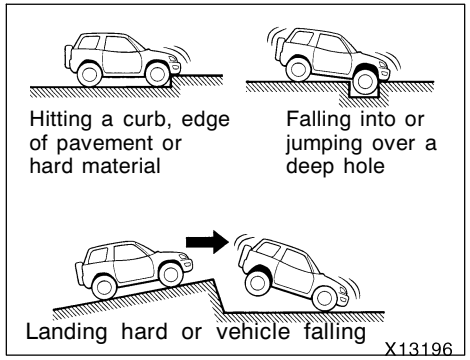

The SRS airbags may deploy if a serious impact occurs to the underside of your vehicle. Some examples are shown in the illustration.

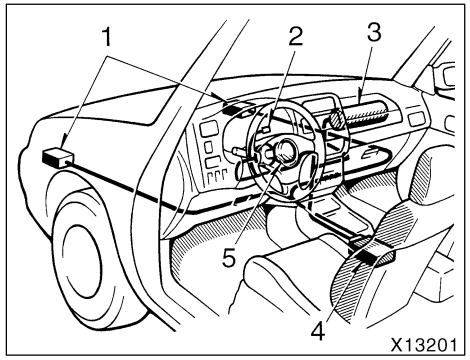

The SRS airbag system consists mainly of the following components, and their locations are shown in the illustration.

1. Front airbag sensors
2. SRS warning light
3. Airbag module for passenger (airbag and inflator)
4. Airbag sensor assembly
5. Airbag module for driver (airbag and inflator)

The airbag sensor assembly consists of a safing sensor and airbag sensor.

In a severe frontal impact, sensors detect deceleration and the system triggers the airbag inflators. Then a chemical reaction in the inflators quickly fills the airbags with non-toxic gas to help restrain the forward motion of the occupants.

When the airbags inflate, they produce a fairly loud noise and release some smoke and residue along with non-toxic gas. This does not indicate a fire. This gas is normally harmless; however, for those who have delicate skin, it may cause a minor skin irritation. Be sure to wash off any residue as soon as possible to prevent any potential skin irritation.

Deployment of the airbags happens in a fraction of a second, so the airbags must inflate with considerable force. While the system is designed to reduce serious injuries, it may also cause minor burns or abrasions and swelling.

Parts of the airbag module (steering wheel hub, dashboard) may be hot for several minutes, but the airbags themselves will not be hot. The airbags are designed to inflate only once.

A crash severe enough to inflate the airbags may break the windshield as the vehicle buckles. In vehicles with a passenger airbag the windshield may also be damaged by absorbing some of the force of the inflating airbag.

⚠ CAUTION

- The SRS airbag system is designed only as a supplement to the primary protection of the driver side and front passenger side seat belt systems. The front seat occupants can be killed or seriously injured by an inflating airbag if they do not wear the available seat belts. During sudden braking just before a collision, an unrestrained driver or front passenger can move forward into direct contact with or close proximity to the airbag which may then deploy during the collision. To obtain maximum protection in an accident, the driver and all passengers in the vehicle must wear their seat belts. Wearing a seat belt during an accident reduces the chances of death or serious injuries or being thrown out of the vehicle. For instructions and precautions concerning the seat belt system, see ”Seat belts” in this section.

- Improperly seated and/or restrained infants and children can be killed or seriously injured by a deploying airbag. An infant or child who is too small to use a seat belt should be properly secured using a child restraint system. Toyota strongly recommends that all infants and children be placed in the rear seat of the vehicle and properly restrained. The rear seat is the safest for infants and children. For instructions concerning the installation of a child restraint system, see ”Child restraint” in this section.

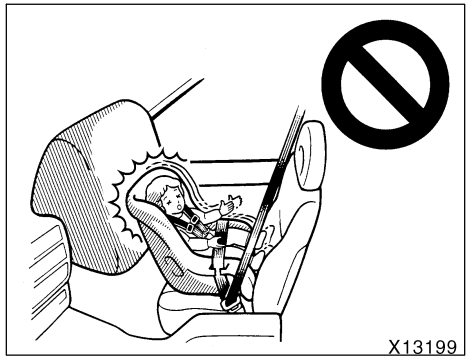

- Never put a rear-facing child restraint system on the front seat because the force of the rapid inflation of the passenger airbag can cause death or serious injury to the child.

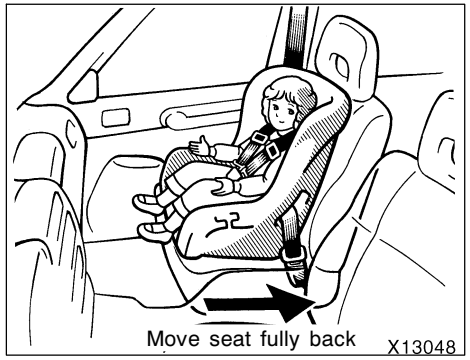

- A forward-facing child restraint system should be allowed to be put on the front seat only when it is unavoidable. Always move the seat as far back as possible because the force of a deploying airbag could cause death or serious injury to the child. For instructions concerning the installation of a child restraint system, see "Child restraint" in this section.

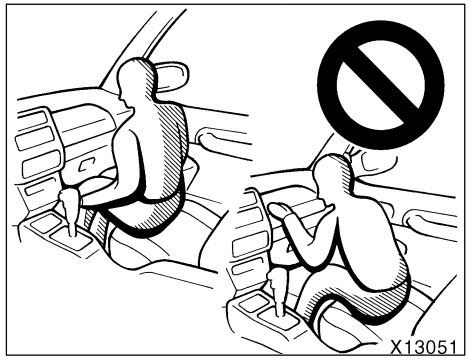

- Do not sit on the edge of the seat or lean over the dashboard when the vehicle is in use. The airbags inflate with considerable speed and force; you may be killed or seriously injured. Sit up straight and well back in the seat, and always use your seat belt.

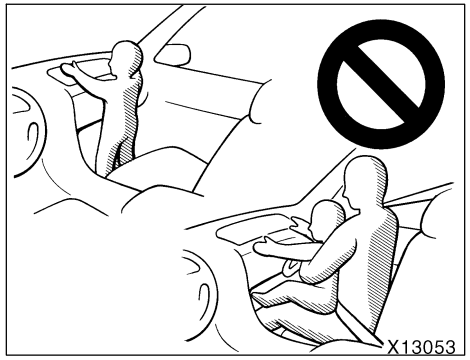

- Do not allow a child to stand up, or to kneel on the front passenger seat. The airbag inflates with considerable speed and force; the child may be killed or seriously injured.
- Do not hold a child on your lap or in your arms. Use a child restraint system in the rear seat. For instructions concerning the installation of a child restraint system, see "Child restraint" in this section.

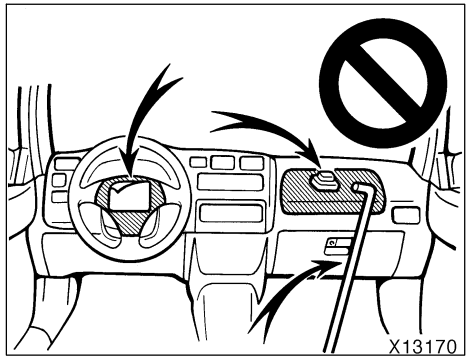

- Do not put objects or your pets on or in front of the dashboard or steering wheel pad that houses the airbag system. They might restrict inflation or cause death or serious injury as they are projected rearward by the force of the deploying airbags. Likewise, the driver and front passenger should not hold things in their arms or on their knees.

- Do not modify or remove any wiring. Do not modify, remove, strike or open any components, such as the steering wheel pad, steering wheel, column cover, front passenger airbag cover, front passenger airbag or airbag sensor assembly. Doing any of these may cause sudden SRS airbag inflation or disable the system, which could result in death or serious injury.

Failure to follow these instructions can result in death or serious injury.

NOTICE

Do not perform any of the following changes without consulting your Toyota dealer. Such changes can interfere with proper operation of the SRS airbag system in some cases.

- ◆Installation of electronic devices such as a mobile two-way radio, cassette tape player or compact disc player
- ◆Modification of the suspension system
- ◆Modification of the front end structure
- ◆Attachment of a grille guard (bull bar, kangaroo bar, etc.), snowplow, winches or any other equipment to the front end
- ◆Repairs made on or near the front fenders, front end structure, console, steering column, steering wheel or dashboard near the front passenger airbag

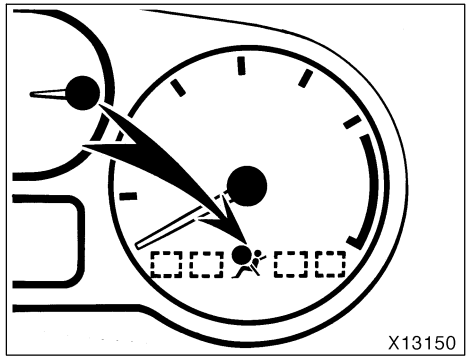

This SRS airbag system has a service reminder indicator to inform the driver of operating problems. If either of the following conditions occurs, this indicates a malfunction of the airbags. Contact your Toyota dealer as soon as possible to service the vehicle.

- The light does not come on when the ignition key is turned to the “ACC” or “ON” position, or the light remains on.
- The light comes on while driving.

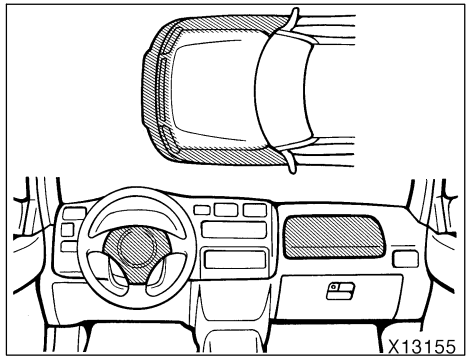

In the following cases, contact your Toyota dealer as soon as possible:

- The SRS airbags have been inflated.
- The front part of the vehicle (shaded in the illustration) was involved in an accident that was not severe enough to cause the SRS airbags to inflate.
- The pad section of the steering wheel or front passenger airbag cover (shaded in the illustration) is scratched, cracked, or otherwise damaged.

NOTICE

Do not disconnect the battery cables before contacting your Toyota dealer.

Child restraint—
—Child restraint precautions

Toyota strongly urges the use of child restraint systems for children small enough to use them.

The laws of all fifty states in the U.S.A. and Canada now require the use of a child restraint system.

Your vehicle conforms to SAEJ1819.

If a child is too large for a child restraint system, the child should sit in the rear seat and must be restrained using the vehicle's seat belt. See "Seat belts" for details.

⚠ CAUTION

- For effective protection in automobile accidents and sudden stops, children must be properly restrained using a seat belt or child restraint system depending on the age and size of the child. Holding a child in your arms is not a substitute for a child restraint system. In an accident, the child can be crushed against the windshield, or between you and the vehicle's interior.

- Toyota strongly urges use of a proper child restraint system which conforms to the size of the child, and is put on the rear seat. According to accident statistics, the child is safer when properly restrained in the rear seat than in the front seat.
- Never put a rear-facing child restraint system on the front seat. In the event of an accident, the force of the rapid inflation of the airbag can cause death or serious injury if a rear-facing child restraint system is put on the front seat.
- Unless it is unavoidable, do not put a forward-facing child restraint system on the front seat.
- A forward-facing child restraint system should be allowed to put on the front seat only when it is unavoidable. Always move the seat as far back as possible, because the force of a deploying airbag could cause death or serious injury to the child.

- Make sure that you have complied with all installation instructions provided by the child restraint manufacturer and that the system is properly secured.

—Child restraint system

A child restraint system for a small child or baby must itself be properly restrained on the seat with either the lap belt or the lap portion of the lap/shoulder belt. You must carefully consult the manufacturer's instructions which accompany the child restraint system.

To provide proper restraint, use a child restraint system following the manufacturer's instructions about the appropriate age and size of the child for the child restraint system.

Install the child restraint system correctly following the instructions provided by its manufacturer of the system. General directions are also provided under the following illustrations.

The child restraint system should be installed on the rear seat. According to accident statistics, the child is safer when properly restrained in the rear seat than in the front seat.

⚠ CAUTION

- Never put a rear-facing child restraint system on the front seat. In the event of an accident, the force of the rapid inflation of the airbag can cause death or serious injury if a rear-facing child restraint system is put on the front seat.
- Unless it is unavoidable, do not put a forward-facing child restraint system on the front seat.
- A forward-facing child restraint system should be allowed to put on the front seat only when it is unavoidable. Always move the seat as far back as possible, because the force of a deploying airbag could cause death or serious injury to the child.
- After installing the child restraint system, make sure it is secured in place following the manufacturer's instructions. If it is not restrained securely, it may cause death or serious injury to the child in the event of a sudden stop or accident.

When not using the child restraint system, keep it secured with the seat belt or place it somewhere other than the passenger compartment. This will prevent it from injuring passengers in the event of a sudden stop or accident.

Your vehicle has anchors for securing the top strap of a child restraint system. The anchor nuts are welded beneath the sheet metal to permit installation of an anchor bracket for a child restraint system.

To install an anchor bracket, use an 8 mm □ 30 mm □ 1.25 mm coarse thread metric bolt and a 10 mm (0.4 in.) spacer. Note that the bolts accompanying many child restraint systems are not metric. You can damage the anchor nuts on your vehicle if you force bolts with different thread into the anchor nuts.

For instructions about how to install the anchor bracket, see "Top strap anchors and locations".

If your child restraint system does not provide any of the necessary parts, you can purchase the following items from your Toyota dealer.

- CRS installation kit
  (Part No. 04731-22012)
  —contains 1 bolt, 3 types of spacers and 1 locking clip.
- Bolt (Part No. 91511-60830)

—Types of child restraint system

Child restraint systems are classified into the following 3 types depending on the child's age and size.

(A) Infant seat
(B) Convertible seat
(C) Booster seat

Install the child restraint system following the instructions provided by its manufacturer.

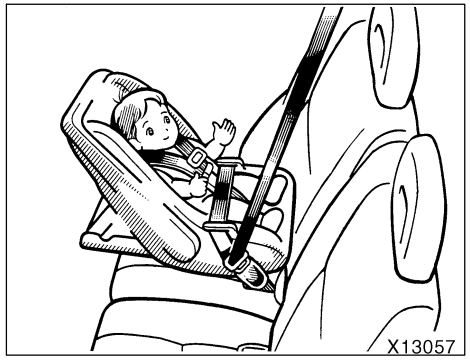

(A) Infant seat

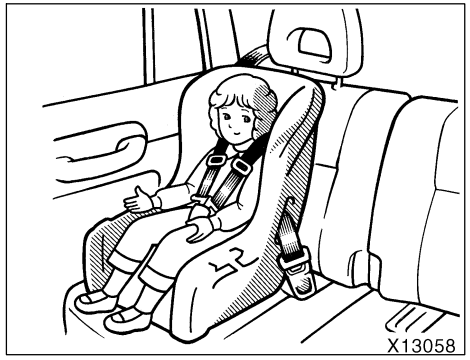

(B) Convertible seat

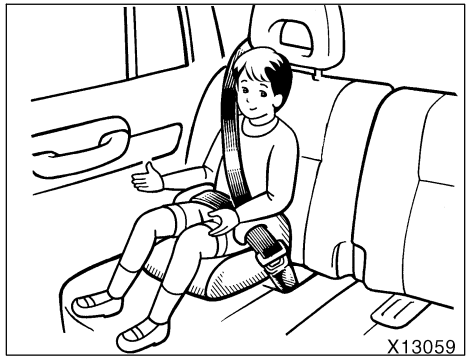

(C) Booster seat

—Installation with 2-point type seat belt

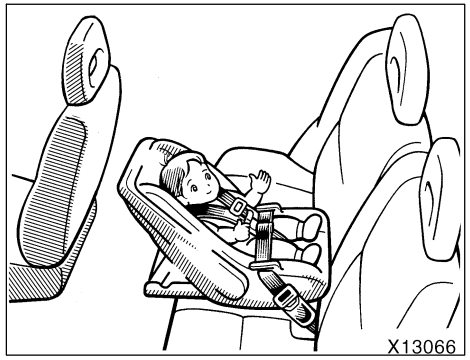

(A) INFANT SEAT INSTALLATION

An infant seat is used in rear-facing position only.

⚠ CAUTION

Do not put a rear-facing child restraint system on the rear seat if it interferes with the lock mechanism of the front seats. This can cause severe injury to the child and front passenger in case of sudden braking or a collision.

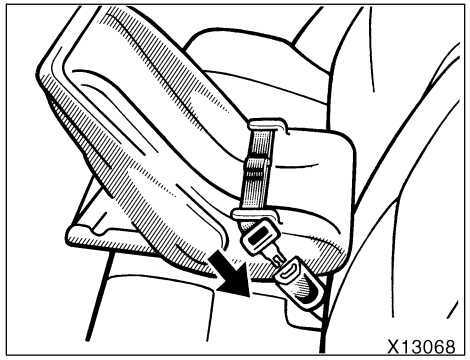

1. Run the center lap belt through or around the infant seat following the instructions provided by its manufacturer and insert the tab into the buckle taking care not to twist the lap belt.

⚠ CAUTION

- After inserting the tab, make sure the tab and buckle are locked and that the lap belt is not twisted.
- Do not insert coins, clips, etc. in the buckle as this may prevent you from properly latching the tab and buckle.
- If the seat belt does not function normally, it cannot protect your child from injury. Contact your Toyota dealer immediately. Do not use the seat until the seat belt is fixed.

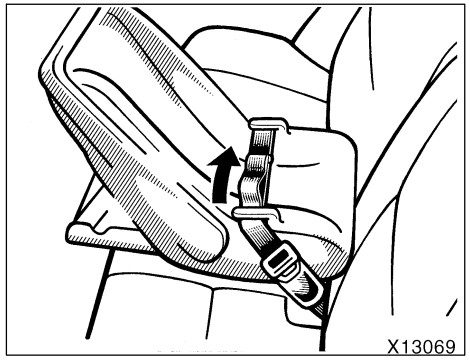

2. While pressing the infant seat firmly against the seat cushion and seatback, tighten the lap belt by pulling its free end to hold the infant seat securely.

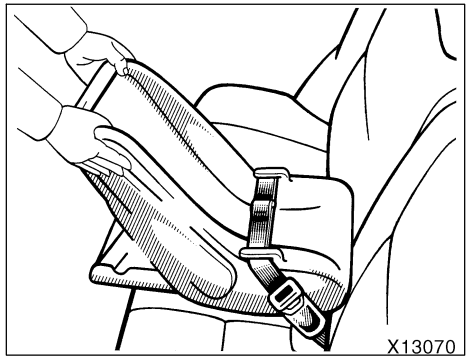

⚠ CAUTION

Push and pull the child restraint system in different directions to be sure it is secure. Follow all the installation instructions provided by its manufacturer.

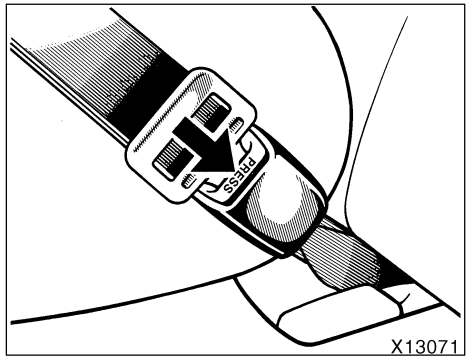

3. To remove the infant seat, press the buckle-release button.

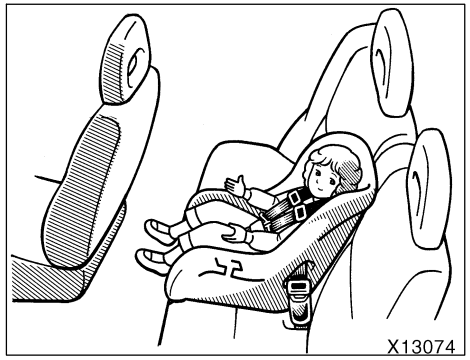

(B) CONVERTIBLE SEAT INSTALLATION

A convertible seat is used in forward-facing and rear-facing position depending on the child's age and size. When installing, follow the manufacturer's instructions about the applicable age and size of the child as well as direction for installing of a child restraint system.

⚠ CAUTION

Do not put a rear-facing child restraint system on the rear seat if it interferes with the lock mechanism of the front seats. This can cause severe injury to the child and front passenger in case of sudden braking or a collision.

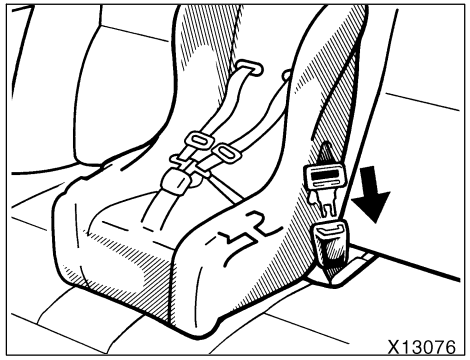

1. Run the center lap belt through or around the convertible seat following the instructions provided by its manufacturer and insert the tab into the buckle taking care not to twist the lap belt.

⚠ CAUTION

- After inserting the tab, make sure the tab and buckle are locked and that the lap belt is not twisted.
- Do not insert coins, clips, etc. in the buckle as this may prevent you from properly latching the tab and buckle.
- If the seat belt does not function normally, it cannot protect your child from injury. Contact your Toyota dealer immediately. Do not use the seat until the seat belt is fixed.

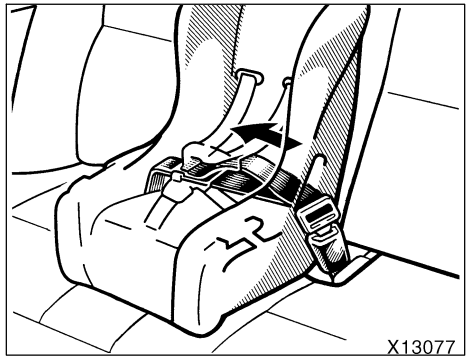

2. While pressing the convertible seat firmly against the seat cushion and seatback, tighten the lap belt by pulling its free end to hold the convertible seat securely.

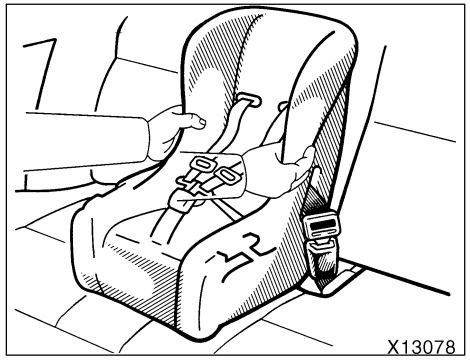

⚠ CAUTION

Push and pull the child restraint system in different directions to be sure it is secure. Follow all the installation instructions provided by its manufacturer.

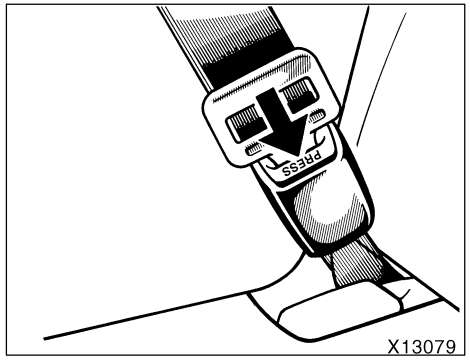

3. To remove the convertible seat, press the buckle-release button.

—Installation with 3-point type seat belt

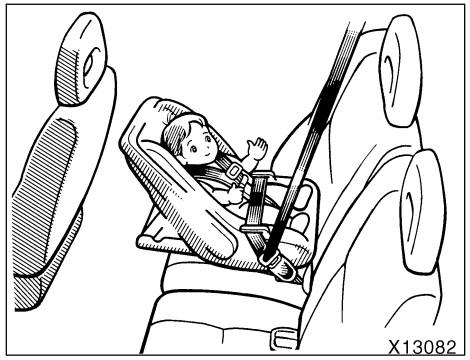

(A) INFANT SEAT INSTALLATION

An infant seat is used in rear-facing position only.

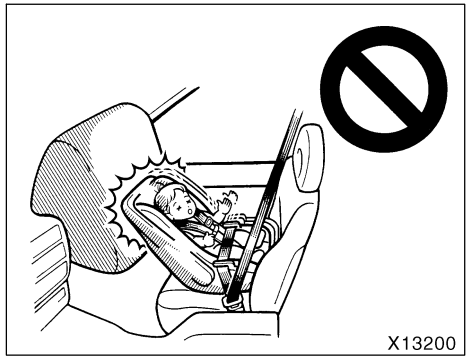

⚠ CAUTION

- Never put a rear-facing child restraint system on the front seat because the force of the rapid inflation of the passenger airbag can cause death or serious injury to the child.

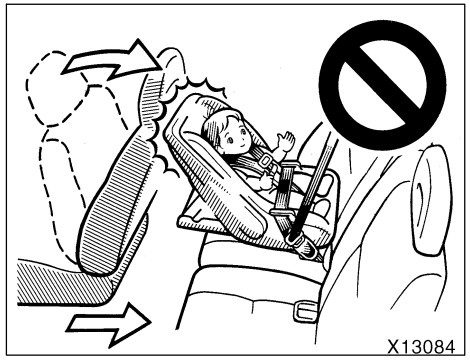

- Do not put a rear-facing child restraint system on the rear seat if it interferes with the lock mechanism of the front seats. This can cause severe injury to the child and front passenger in case of sudden braking or a collision.

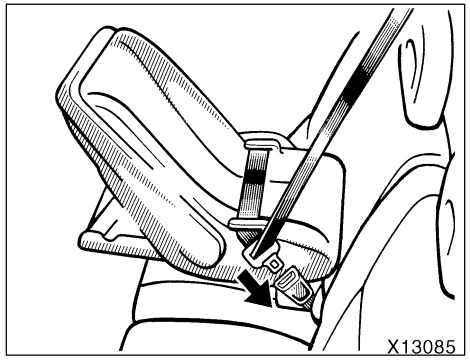

1. Run the lap and shoulder belt through or around the infant seat following the instructions provided by its manufacturer and insert the tab into the buckle taking care not to twist the belt. Keep the lap portion of the belt tight.

⚠ CAUTION

- After inserting the tab, make sure the tab and buckle are locked and that the lap and shoulder portions of the belt are not twisted.
- Do not insert coins, clips, etc. in the buckle as this may prevent you from properly latching the tab and buckle.
- If the seat belt does not function normally, it cannot protect your child from injury. Contact your Toyota dealer immediately. Do not use the seat until the seat belt is fixed.

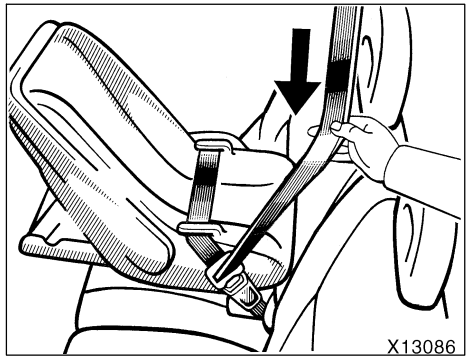

2. Fully extend the shoulder belt to put it in the lock mode. When the belt is then retracted even slightly, it cannot be extended.

To hold the infant seat securely, make sure the belt is in the lock mode before letting the belt retract.

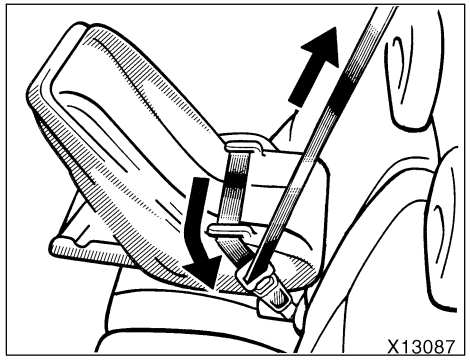

3. While pressing the infant seat firmly against the seat cushion and seatback, let the shoulder belt retract as far as it will go to hold the infant seat securely.

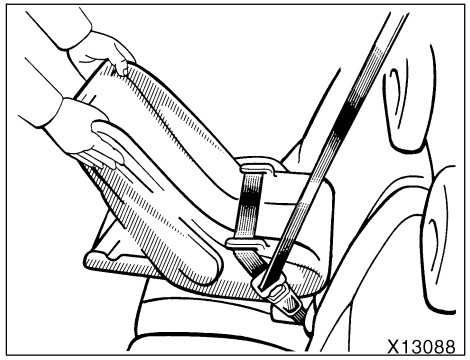

⚠ CAUTION

Push and pull the child restraint system in different directions to be sure it is secure. Follow all the installation instructions provided by its manufacturer.

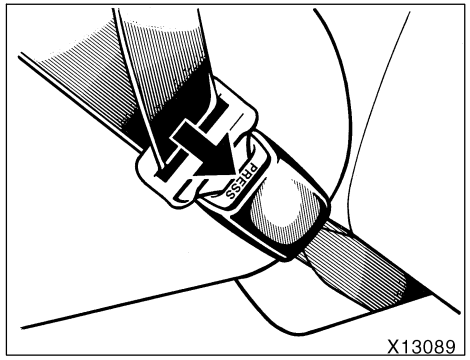

4. To remove the infant seat, press the buckle-release button and allow the belt to retract completely. The belt will move freely again and be ready to work for an adult or older child passenger.

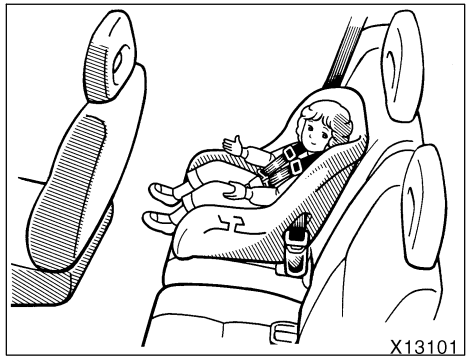

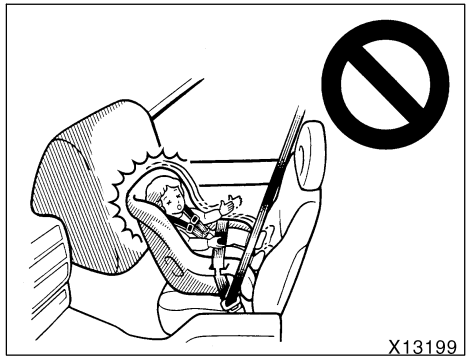

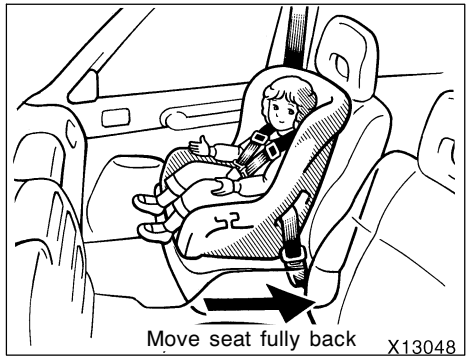

(B) CONVERTIBLE SEAT INSTALLATION

A convertible seat is used in forward-facing and rear-facing position depending on the child's age and size. When installing, follow the manufacturer's instruction about the applicable age and size of the child as well as directions for installing a child restraint system.

⚠ CAUTION

- Never put a rear-facing child restraint system on the front seat because the force of the rapid inflation of the passenger airbag can cause death or serious injury to the child.

- A forward-facing child restraint system should be allowed to be put on the front seat only when it is unavoidable. Always move the seat as far back as possible, because the force of a deploying airbag could cause death or serious injury to the child.

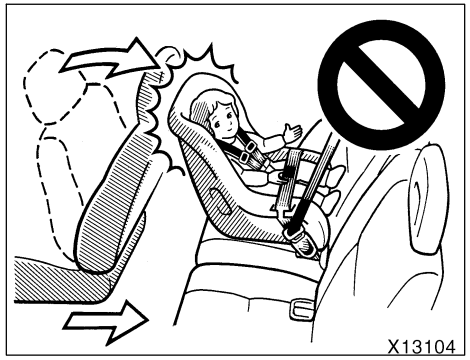

- Do not put a rear-facing child restraint system on the rear seat if it interferes with the lock mechanism of the front seats. This can cause severe injury to the child and front passenger in case of sudden braking or a collision.

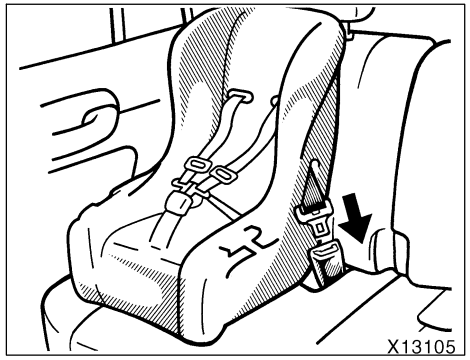

1. Run the lap and shoulder belt through or around the convertible seat following the instructions provided by its manufacturer and insert the tab into the buckle taking care not to twist the belt. Keep the lap portion of the belt tight.

⚠ CAUTION

- After inserting the tab, make sure the tab and buckle are locked and that the lap and shoulder portions of the belt are not twisted.
- Do not insert coins, clips, etc. in the buckle as this may prevent you from properly latching the tab and buckle.
- If the seat belt does not function normally, it cannot protect your child from injury. Contact your Toyota dealer immediately. Do not use the seat until the seat belt is fixed.

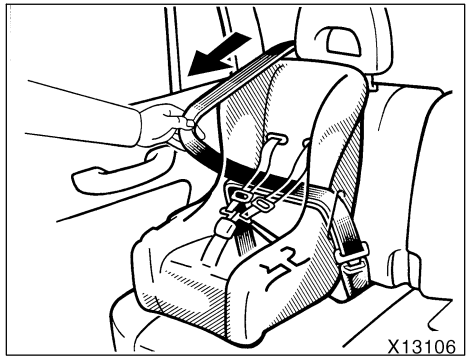

2. Fully extend the shoulder belt to put it in the lock mode. When the belt is then retracted slightly, it cannot be extended.

To hold the convertible seat securely, make sure the belt is in the lock mode before letting the belt retract.

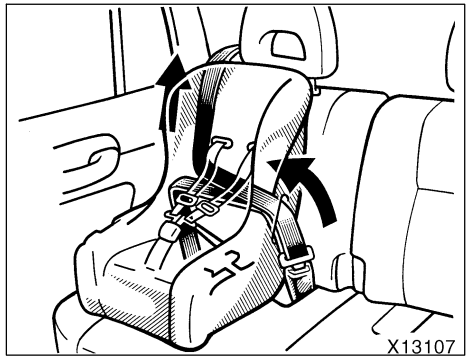

3. While pressing the convertible seat firmly against the seat cushion and seatback, let the shoulder belt retract as far as it will go to hold the convertible seat securely.

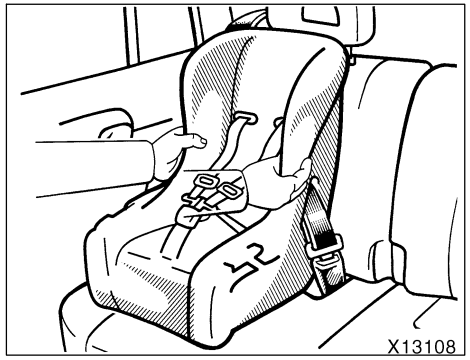

⚠ CAUTION

Push and pull the child restraint system in different directions to be sure it is secure. Follow all the installation instructions provided by its manufacturer.

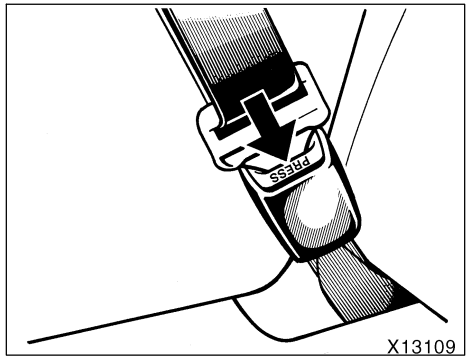

4. To remove the convertible seat, press the buckle-release button and allow the belt to retract completely. The belt will move freely again and be ready to work for an adult or older child passenger.

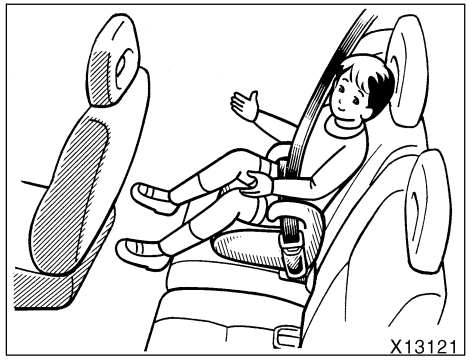

(C) BOOSTER SEAT INSTALLATION

A booster seat is used in forward-facing position only.

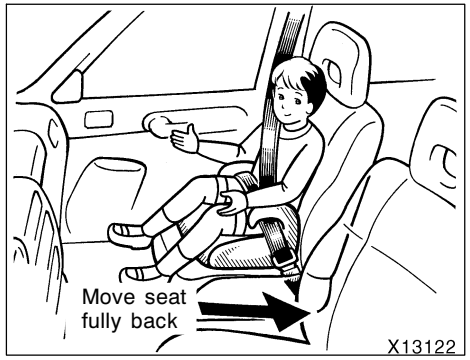

⚠ CAUTION

A forward-facing child restraint system should be allowed to be put on the front seat only when it is unavoidable. Always move the seat as far back as possible, because the force of a deploying airbag could cause death or serious injury to the child.

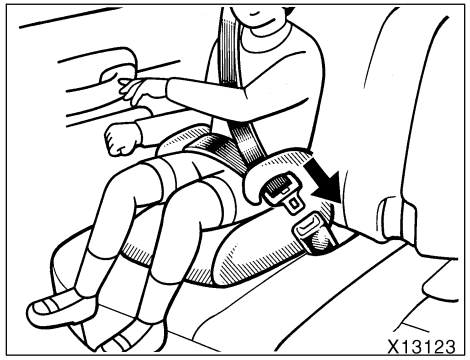

1. Sit the child on a booster seat. Run the lap and shoulder belt through or around the booster seat and child following the instructions provided by its manufacturer and insert the tab into the buckle taking care not to twist the belt.

Make sure the shoulder belt is correctly across the child's shoulder and that the lap belt is positioned as low as possible on child's hips. See "Seat belts" for details.

⚠ CAUTION

- Always make sure the shoulder belt is positioned across the center of child's shoulder. The belt should be kept away from child's neck, but not falling off child's shoulder. Failure to do so could reduce the amount of protection in an accident and cause serious injuries in a collision.
- Both high-positioned lap belts and loose-fitting belts could cause serious injuries due to sliding under the lap belt during a collision. Keep the lap belt positioned as low on hips as possible.
- For child's safety, do not place the shoulder belt under child's arm.
- After inserting the tab, make sure the tab and buckle are locked and that the lap and shoulder portions of the belt are not twisted.
- Do not insert coins, clips, etc. in the buckle as this may prevent you from properly latching the tab and buckle.

- If the seat belt does not function normally, it cannot protect your child from injury. Contact your Toyota dealer immediately. Do not use the seat until the seat belt is fixed.

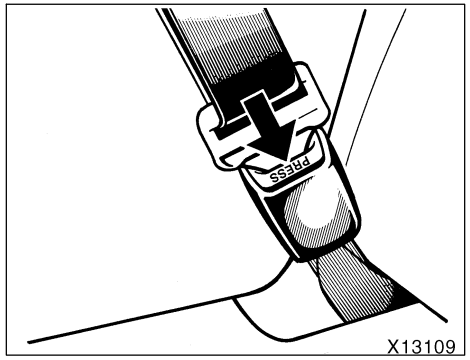

2. To remove the child restraint system, press the buckle-release button and allow the belt to retract.

—Top strap anchors and locations

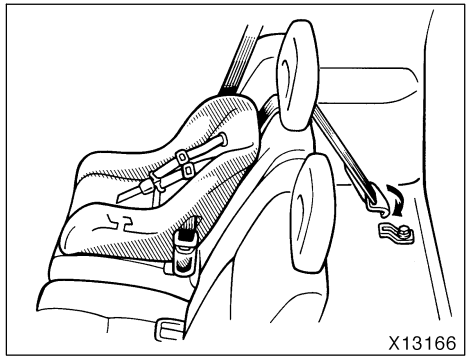

If your child restraint system requires the use of a top strap, latch the hook onto the anchor bracket and tighten the top strap.

See the following instructions to install the anchor bracket.

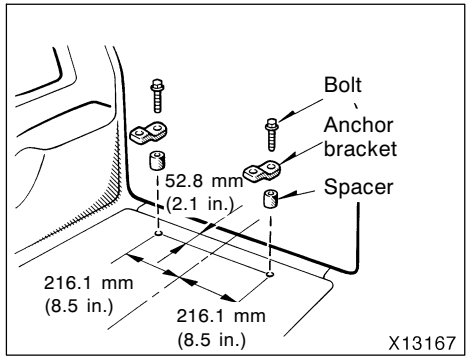

2-door hardtop and soft-top

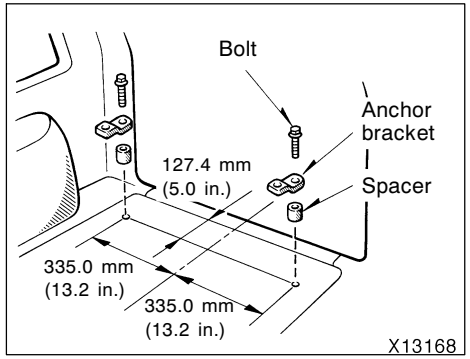

4-door hardtop

On the luggage compartment floor

a. Using the illustration as a guide, run your fingers across the luggage compartment floor itself to locate the position of the bolts underneath.

b. Remove the bolt.

c. Insert a 10 mm (0.4 in.) spacer and tighten down the anchor bracket for your child restraint system with a bolt. Torque the bolt to 16.5—24.7 N·m (1.68—2.52 kgf·m, 12.2—18.2 ft·lbf).

This model sold in Canada is provided with a bracket set in the glove box, designed for use with any of the 2 anchor locations shown in the illustration.

If your child restraint system does not provide any of the necessary parts, ask your Toyota dealer. (See ”—Child restraint system”.)

If you remove the anchor brackets when the child restraint system is necessary no longer, replace the bolts in the holes to prevent entry of exhaust emissions, water or dirt.

Tilt steering wheel

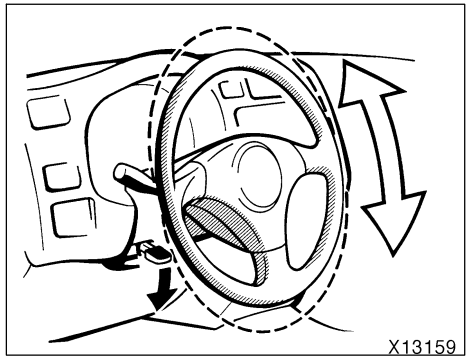

Type A

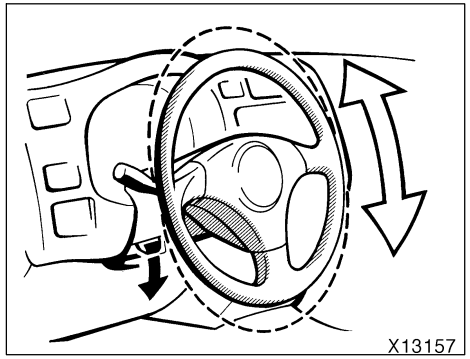

Type B

To change the steering wheel angle, hold the steering wheel, push down the lock release lever, tilt the steering wheel to the desired angle and return the lever to its original position (type A) or release the lever (type B).

⚠ CAUTION

- Do not adjust the steering wheel while the vehicle is moving.
- After adjusting the steering wheel, try moving it up and down to make sure it is locked in position.

Outside rear view mirrors—

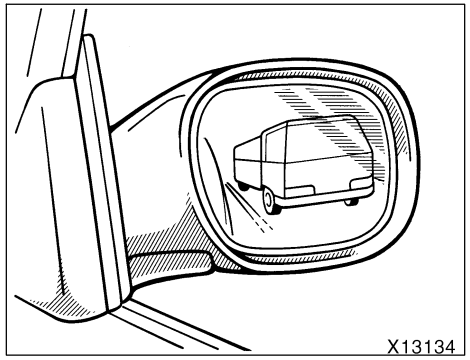

Adjust the mirror so that you can just see the side of your vehicle in the mirror.

Be careful when judging the size or distance of any object seen in the outside rear view mirror on the passenger's side. It is a convex mirror with a curved surface. Any object seen in a convex mirror will look smaller and farther away than when seen in a flat mirror.

⚠ CAUTION

Do not adjust the mirror while the vehicle is moving. It may cause the driver to mishandle the vehicle and an accident may occur resulting in personal injuries.

—Power rear view mirror control

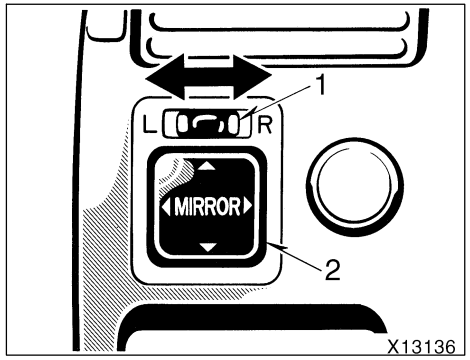

To adjust a mirror, use the switches.

1. Master switch—To select the mirror to be adjusted
   Place the switch at "L" (left) or "R" (right).
2. Control switch—To move the mirror
   Push the switch in the desired direction.

Mirror can be adjusted when key is in the "ACC" or "ON" position.

NOTICE

If ice should jam the mirror, do not operate the control or scrape the mirror face. Use a spray de-icer to free the mirror.

—Folding rear view mirrors

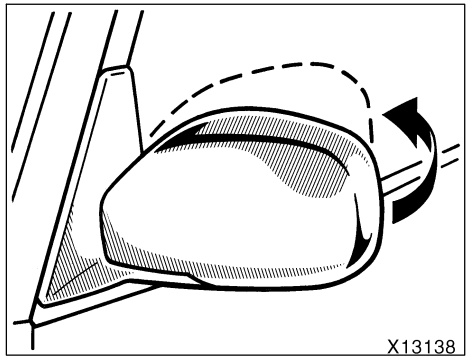

The rear view mirrors can be folded backward for parking in restricted areas.

To fold the rear view mirror, push backward.

⚠ CAUTION

Do not drive with the mirrors folded backward. Both the driver and passenger side rear view mirrors must be extended and properly adjusted before driving.

Anti-glare inside rear view mirror

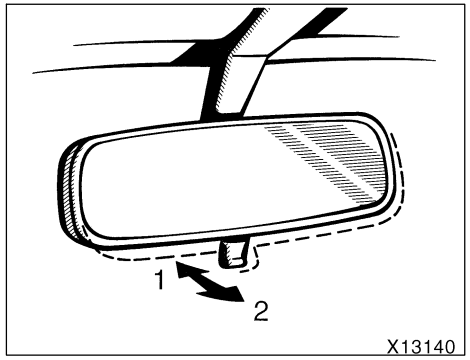

Adjust the mirror so that you can just see the rear of your vehicle in the mirror.

To reduce glare from the headlights of the vehicle behind you during night driving, operate the lever on the lower edge of the mirror.

Daylight driving—Lever at position 1

The reflection in the mirror has greater clarity at this position.

Night driving—Lever at position 2

Remember that by reducing glare you also lose some rear view clarity.

⚠ CAUTION

Do not adjust the mirror while the vehicle is moving. It may cause the driver to mishandle the vehicle and an accident may occur resulting in personal injuries.

SECTION 1 - 4

OPERATION OF INSTRUMENTS AND CONTROLS

Lights, Wipers and Defogger

Headlights and turn signals 80
Emergency flashers 81
Instrument panel light control 82
Interior light 82
Personal lights 82
Windshield wipers and washer 83
Rear window wiper and washer 84
Rear window defogger 84

Headlights and turn signals

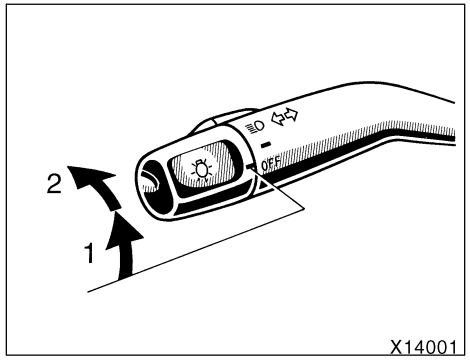

HEADLIGHTS

To turn on the following lights: Twist the headlight/turn signal lever knob.

Position 1—Parking, tail, license plate, side marker and instrument panel lights

Position 2—Headlights and all of the above

Light reminder buzzer

A buzzer will remind you to turn the lights off when the driver's door is opened if you remove the key with the headlights left on.

NOTICE

To prevent the battery from being discharged, do not leave the lights on for a long period when the engine is not running.

Daytime running light system (on some models)

The headlights turn on when the parking brake is released with the engine started, even with the light switch in the "OFF" position. They will not go off until the ignition switch is turned off.

To turn on the other exterior lights and instrument panel lights, twist the knob to the position 1.

Under the daytime running light system, the headlights turn on at reduced intensity. Twist the knob to the position 2 to turn to full intensity for driving at night.

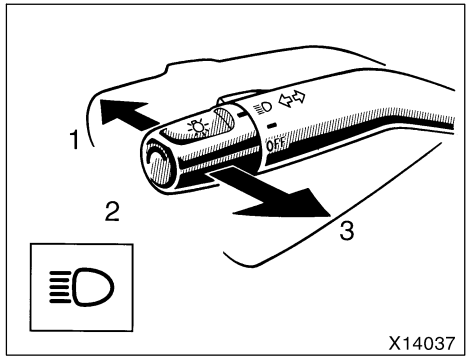

High-Low beams—For high beams, turn the headlights on and push the lever away from you (position 1). Pull the lever toward you (position 2) for low beams.

The headlight high beam indicator light (blue light) on the instrument panel will tell you that the high beams are on.

Flashing the high beam headlights (position 3)—Pull the lever all the way back. The high beam headlights turn off when you release the lever.

You can flash the high beam headlights with the knob turned to "OFF".

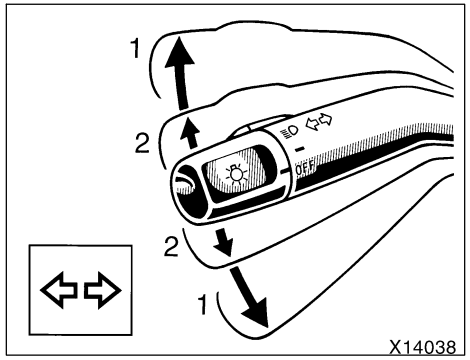

TURN SIGNALS

To signal a turn, push the headlight/turn signal lever up or down to position 1.

The key must be in the ”ON” position.

The lever automatically returns after you make a turn, but you may have to return it by hand after you change lanes.

To signal a lane change, move the lever up or down to the pressure point (position 2) and hold it.

If the turn signal indicator lights (green lights) on the instrument panel flash faster than normal, a front or rear turn signal bulb is burned out. See ”Replacing light bulbs” in Section 7-3.

Emergency flashers

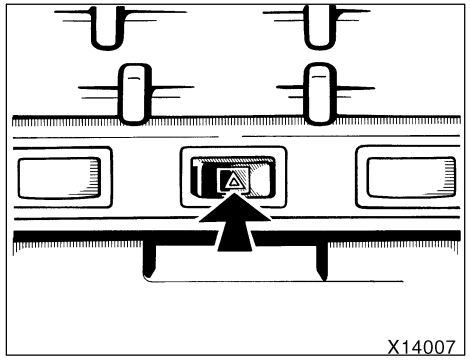

To turn on the emergency flashers, push the switch.

All the turn signal lights will flash. To turn them off, push the switch once again.

Turn on the emergency flashers to warn other drivers if your vehicle must be stopped where it might be a traffic hazard.

Always pull as far off the road as possible.

The turn signal light switch will not work when the emergency flashers are operating.

NOTICE

To prevent the battery from being discharged, do not leave the switch on longer than necessary when the engine is not running.

Instrument panel light control

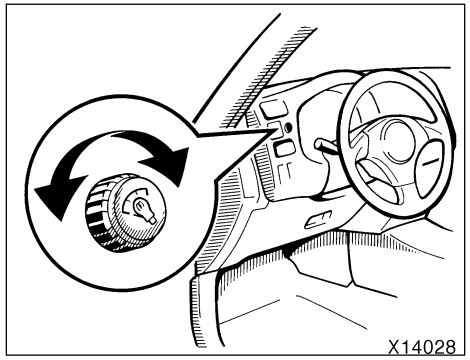

To adjust the brightness of the instrument panel lights, turn the knob.

Interior light

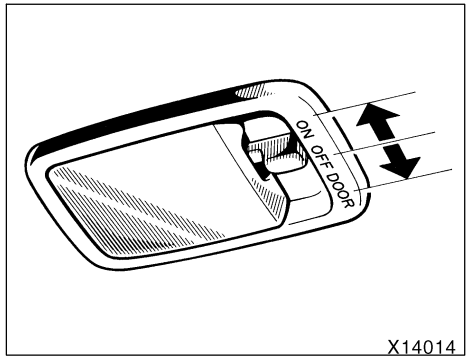

To turn on the interior light, slide the switch.

The interior light switch has the following positions:

”ON”—Keeps the light on all the time.

”OFF”—Turns the light off.

”DOOR”—
2-door hardtop and soft-top: Turns the light on when the back door (hardtop) or tailgate (soft-top) is opened. The light goes off when the back door is closed.

4-door hardtop: Turns the light on when either rear door or back door is opened. The light goes off when both rear doors and back door are closed.

Personal lights (with moon roof)

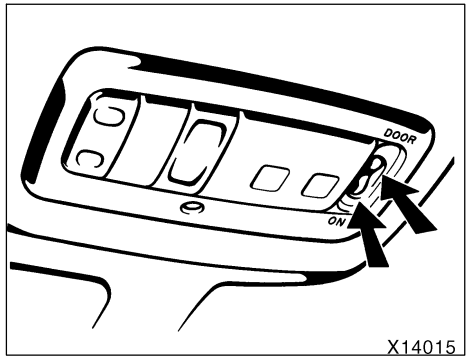

To turn on the personal light, push the switch. To turn the light off, slightly push the switch on the opposite side.

The personal light switch has the following positions:

”ON”—Keeps the light on all the time.

”DOOR”—Turns the light on when either front door is opened. The light goes off when both front doors are closed.

Personal lights (without moon roof)

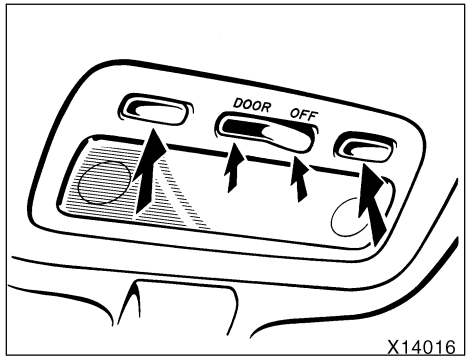

The personal lights operate separately with each outer switch.

To turn on the light, push the switch on your side. To turn the light off, push the switch once again.

The center switch has the following positions:

"DOOR"—Turns both lights on when either front door is opened. The light goes off when both front doors are closed.

"OFF"—The lights are off unless you operate either outer switch.

Windshield wipers and washer

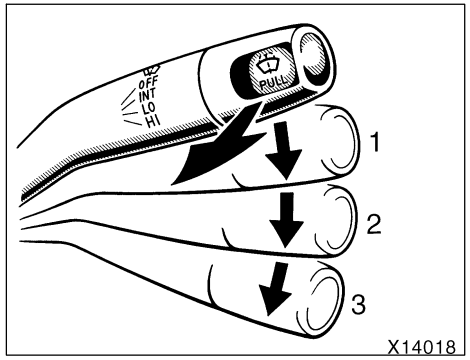

To turn on the windshield wipers, move the lever to the desired setting.

The key must be in the "ON" position.

Lever position	Speed setting
Position 1	Intermittent
Position 2	Slow
Position 3	Fast

To squirt washer fluid, pull the lever toward you and release it.

If the windshield wipers are off, they will operate a couple of times after the washer squirts.

For instructions on adding washer fluid, see "Adding washer fluid" in Section 7-3.

In freezing weather, warm the windshield with the defroster before using the washer. This will help prevent the washer fluid from freezing on your windshield, which can block your vision.

NOTICE

Do not operate the wipers if the windshield is dry. It may scratch the glass.

Rear window wiper and washer

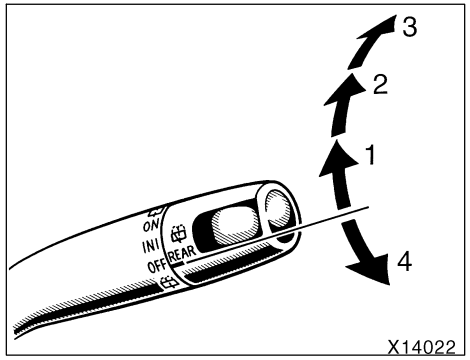

To turn on the rear window wiper, twist the lever knob upward.

The key must be in the ”ON” position.

Lever position	Speed setting
Position 1	Intermittent
Position 2	Normal

To squirt washer fluid on the rear window, twist the knob upward or downward as far as it will go (position 3 or 4). The knob automatically returns from these positions after you release it.

For instructions on adding washer fluid, see ”Adding washer fluid” in Section 7-3.

NOTICE

Do not operate the rear wiper if the rear window is dry. It may scratch the glass.

Rear window defogger

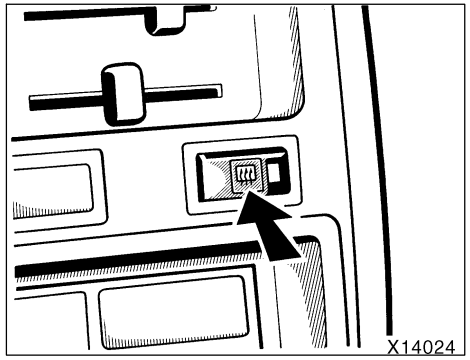

To defog or defrost the rear window, push the switch.

The key must be in the ”ON” position.

The thin heater wires on the inside of the rear window will quickly clear the surface. An indicator light will illuminate to indicate the defogger is operating.

Push the switch once again to turn the defogger off.

With timer: The system will automatically shut off after the defogger has operated about 15 minutes.

Make sure you turn the defogger off when the window is clear. Leaving the defogger on for a long time could cause the battery to discharge, especially during stop-and-go driving. The defogger is not designed for drying rain water or for melting snow.

NOTICE
◆Without timer: To prevent the battery from being discharged, turn the switch on when the engine is running. ◆When cleaning the inside of the rear window, be careful not to scratch or damage the heater wires.

SECTION 1 - 5

OPERATION OF INSTRUMENTS AND CONTROLS

Gauges, Meters and Service reminder indicators

Fuel gauge 88
Engine coolant temperature gauge 88
Tachometer 89
Odometer and two trip meters 89
Service reminder indicators and warning buzzers 90

Fuel gauge

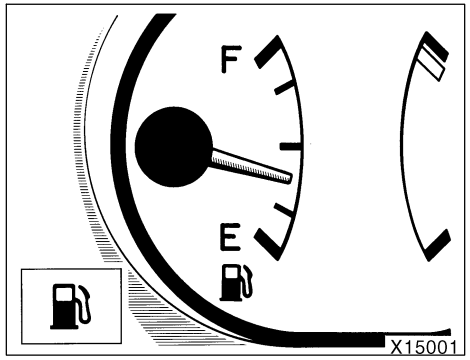

The gauge works when the ignition switch is on and indicates the approximate quantity of fuel remaining in the tank.

Nearly full—Needle at ”F”
Nearly empty—Needle at ”E”

It is a good idea to keep the tank over 1/4 full.

This fuel gauge has a non-return type needle which remains at the last indicated position when the ignition switch is turned off.

If the fuel level approaches ”E” or the low fuel level warning light comes on, fill the fuel tank as soon as possible.

On inclines or curves, due to the movement of fuel in the tank, the fuel gauge needle may fluctuate or the low fuel level warning light may come on earlier than usual.

If the fuel tank is completely empty, the malfunction indicator lamp comes on. Fill the fuel tank immediately.

The indicator lamp goes off after driving several times. If the indicator lamp does not go off, contact your Toyota dealer as soon as possible.

Engine coolant temperature gauge

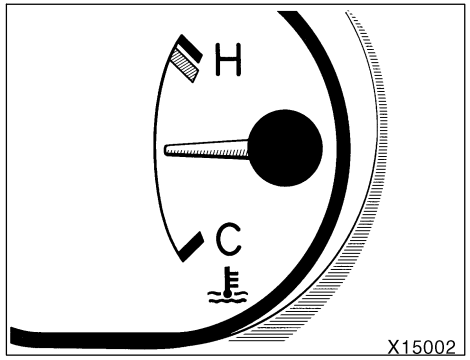

The gauge indicates the engine coolant temperature when the ignition switch is on. The engine operating temperature will vary with changes in weather and engine load.

If the needle moves into the red zone, your engine is too hot. If your vehicle overheats, stop your vehicle and allow the engine to cool.

Your vehicle may overheat during severe operating conditions, such as:

- Driving up a long hill on a hot day.
- Reducing speed or stopping after high speed driving.
- Idling for a long period with the air conditioning on in stop-and-go traffic.
- Towing a trailer.

NOTICE

◆Do not remove the thermostat in the engine cooling system as this may cause the engine to overheat. The thermostat is designed to control the flow of coolant to keep the temperature of the engine within the specified operating range.

◆Do not continue driving with an overheated engine. See "If your vehicle overheats" in Section 4.

Tachometer

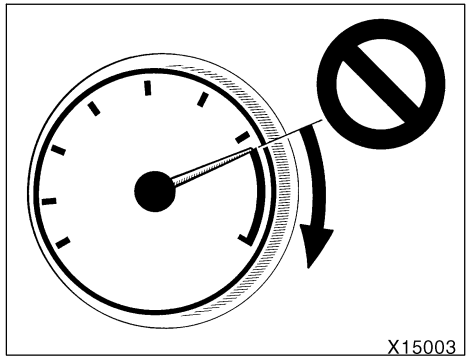

The tachometer indicates engine speed in thousands of rpm (revolutions per minute). Use it while driving to select correct shift points and to prevent engine lugging and overrevving.

Driving with the engine running too fast causes excessive engine wear and poor fuel economy. Remember, in most cases the slower the engine speed, the greater the fuel economy.

NOTICE

Do not let the indicator needle get into the red zone. This may cause severe engine damage.

Odometer and two trip meters

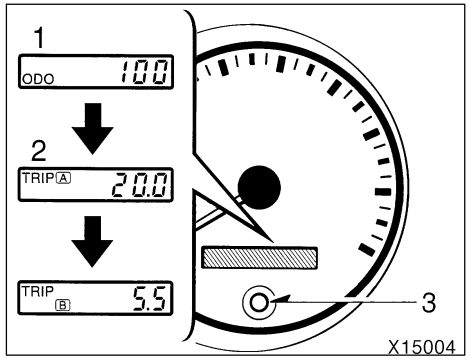

This meter displays the odometer and two trip meters.

1. Odometer—Shows the total distance the vehicle has been driven.
2. Two trip meters—Show two different distances independently driven since the last time each trip meter was set to zero.

   You can use one trip meter to calculate the fuel economy and the other to measure the distance on each trip. All trip meter data is cancelled if the electrical power source is disconnected.

3. Trip meter reset knob—Resets the two trip meters to zero, and also change the meter display.

   To change the meter display, quickly push and release the knob. The meter display changes in the order from the odometer to trip meter A to trip meter B, then back to the odometer each time you push.

   To reset the trip meter A to zero, display the meter A reading, then push and hold the knob until the meter is set to zero. The same process can be applied for resetting the trip meter B.

Service reminder indicators and warning buzzers

If the indicator or buzzer comes on...		Do this.
(a)	**BRAKE** (type A) (type B)	If parking brake is off, stop immediately and contact Toyota dealer.
(b)	(indicator and buzzer)	Fasten seat belt.
(c)		Stop and check.
(d)		Stop and check.

If the indicator or buzzer comes on...		Do this.
(e)	CHECK (type A) (type B)	Take vehicle to Toyota dealer.
(f)		Fill up tank.
(g)	**ABS** (type A) (type B)	Take vehicle to Toyota dealer.

If the indicator or buzzer comes on...		Do this.
(h)		Close all side doors, back door (hardtop) and tailgate (soft-top).
(i)	A/T OIL TEMP	Stop and check.
(j)		Take vehicle to Toyota dealer immediately.
(k)		Add washer fluid.
(l)	Light reminder buzzer	Turn off light.
(m)	Key reminder buzzer	Remove key.

(a) Brake System Warning Light

This light comes on in the following cases when the ignition key is turned on.

- When the parking brake is applied...
- When the brake fluid level is low...

Have your vehicle checked at your Toyota dealer in the following case:

The light does not come on even if the parking brake is applied with the ignition "ON".

CAUTION

If the light does not go out even after the parking brake is released during the engine running, immediately stop your vehicle at a safe place and contact your Toyota dealer. In this case, the brakes may not work properly and your stopping distance will be longer. Depress the brake pedal firmly.

(b) Seat Belt Reminder Light and Buzzer

This light and buzzer remind you to buckle up the driver's seat belt.

Once the ignition key is turned to "ON" or "START", the reminder light flashes and buzzer sounds if the driver's seat belt is not pulled out. Unless the driver starts to pull the shoulder belt out of the retractor, the light keeps flashing and the buzzer stops after about 4 to 8 seconds.

(c) Discharge Warning Light

This light warns that the battery is being discharged.

If it comes on while you are driving, there is a problem somewhere in the charging system.

The engine ignition will continue to operate, however, until the battery is discharged. Turn off the air conditioning, blower, radio,etc., and drive directly to the nearest Toyota dealer or repair shop.

NOTICE

Do not continue driving if the engine drive belt is broken or loose.

(d) Low Oil Pressure Warning Light

This light warns that the engine oil pressure is too low.

If it flickers or stays on while you are driving, pull off the road to a safe place and stop the engine immediately. Call a Toyota dealer or qualified repair shop for assistance.

The light may occasionally flicker when the engine is idling or it may come on briefly after a hard stop. There is no cause for concern if it then goes out when the engine is accelerated slightly.

The light may come on when the oil level is extremely low. It is not designed to indicate low oil level, and the oil level must be checked using the level dipstick.

NOTICE
Do not drive the vehicle with the warning light on—even for one block. It may ruin the engine.

(e) Malfunction Indicator Lamp

This lamp comes on in the following cases.

a. The fuel tank is completely empty. (See "Fuel gauge" in Section 1-5 for instructions.)

b. The fuel tank cap is not tightened securely. (See "Fuel tank cap" in Section 1-2 for instructions.)

c. There is a problem somewhere in your engine or automatic transmission electrical system.

If it comes on while you are driving in case c, have your vehicle checked/repaired by your Toyota dealer as soon as possible.

(f) Low Fuel Level Warning Light

This light comes on when the fuel level in the tank becomes nearly empty. Fill up the tank as soon as possible.

On inclines or curves, due to the movement of fuel in the tank, the low fuel level warning light may come on earlier than usual.

(g) "ABS" Warning Light

The light comes on with the ignition key turned to "ON". If the anti-lock brake system works properly, the light goes out after a few seconds. Thereafter, if the system malfunctions, the light comes on.

When the "ABS" warning light is on (and the brake system warning light is off), the anti-lock brake system does not operate, but the brake system still operates conventionally.

When the "ABS" warning light is on (and the brake system warning light is off), the anti-lock brake system does not operate so that the wheels could lock up during a sudden braking or braking on slippery road surfaces.

If the following conditions occur, this indicates a malfunction somewhere in the parts monitored by the warning light system. Contact your Toyota dealer as soon as possible to service the vehicle.

- The light does not come on with the ignition key turned to "ON", or remains on.
- The light comes on while driving.

If the light lit during driving goes out and does not come on again, it is a normal operation.

(h) Open Door Warning Light

This light remains on until all the doors, back door (hardtop) and tailgate (soft-top) are completely closed.

(i) Automatic Transmission Fluid Temperature Warning Light (four-wheel drive models)

This light warns that the automatic transmission fluid temperature is too high.

If this light comes on while you are driving, slow down and pull off the road. Stop the vehicle at a safe place and put the selector lever in ”P”. With the engine idling, wait until the light goes off. If the light goes off, you can start the vehicle again. If the light does not go off, call a Toyota dealer or qualified repair shop for assistance.

NOTICE
Continued driving with the warning light on may damage the automatic transmission.

(j) SRS Warning Light

This light will come on when the ignition key is turned to the ”ACC” or ”ON” position. After about 6 seconds, the light will go off. This means the system of the airbag and front seat belt pretensioners are operating properly.

The warning light system monitors the airbag sensor assembly, front airbag sensors, seat belt pretensioner assemblies, inflators, warning light, interconnecting wiring and power sources.

If either of the following conditions occurs, this indicates a malfunction somewhere in the parts monitored by the warning light system. Contact your Toyota dealer as soon as possible to service the vehicle.

- The light does not come on when the ignition key is turned to the ”ACC” or ”ON” position or remains on.
- The light comes on or flashes while driving.

(k) Low Windshield Washer Fluid Level Warning Light (Canada)

The light warns that the windshield washer fluid level is too low. Add washer fluid at your earliest opportunity. (For instructions, see ”Adding washer fluid” in Section 7-3.)

(l) Light Reminder Buzzer

This buzzer will sound if the headlight switch is left on and the driver’s door is opened with the key removed from the ignition switch.

(m) Key Reminder Buzzer

This buzzer reminds you to remove the key when you open the driver’s door with the ignition key in the ”ACC” or ”LOCK” position.

CHECKING SERVICE REMINDER INDICATORS (except the low fuel level warning light and low windshield washer fluid level warning light)

1. Apply the parking brake.
2. Open one of the doors or tailgate (soft-top).
   The open door warning light should come on.
3. Close the door or tailgate (soft-top).
   The open door warning light should go off.
4. Turn the ignition key to ”ACC”.
   The SRS warning light should come on. It goes off after about 6 seconds.
5. Turn the ignition key to ”ON”, but do not start the engine.
   All the service reminder indicators except the open door warning light, SRS warning light and automatic transmission fluid temperature warning light should come on. The ”ABS” warning light goes off after a few seconds.
6. Turn the ignition key to ”START”. The automatic transmission fluid temperature warning light should come on.

If any service reminder indicator or warning buzzer does not function as described above, either the bulb is burned out or the circuit is in need of repair. Have it checked by your Toyota dealer as soon as possible.

SECTION 1 - 6

OPERATION OF INSTRUMENTS AND CONTROLS

Ignition switch, Transmission and Parking brake

Ignition switch with steering lock 96
Automatic transmission 97
Manual transmission 101
Center differential lock system 102
Parking brake 104
Cruise control 104

Ignition switch with steering lock

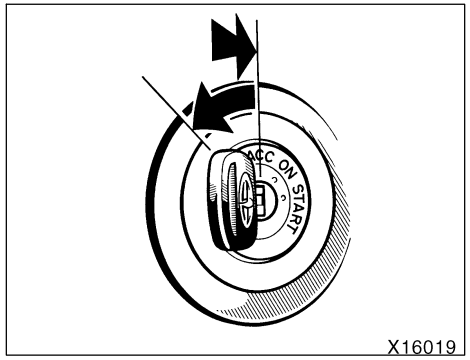

”START”—Starter motor on. The key will return to the ”ON” position when released.

For starting tips, see Section 3.

”ON”—Engine on and all accessories on.

This is the normal driving position.

”ACC”—Accessories such as the radio operate, but the engine is off.

If you leave the key in the ”ACC” or ”LOCK” position and open the driver’s door, a buzzer will remind you to remove the key.

”LOCK”—Engine is off and the steering wheel is locked. The key can be removed only at this position.

You must push in the key to turn the key from ”ACC” to the ”LOCK” position. On vehicles with an automatic transmission, the selector lever must be in the ”P” position before pushing the key.

When starting the engine, the key may seem stuck at the ”LOCK” position. To free it, first be sure the key is pushed all the way in, and then rock the steering wheel slightly while turning the key gently.

⚠ CAUTION

For manual transmission:

Never remove the key when the vehicle is moving, as this will lock the steering wheel and result in loss of steering control.

NOTICE

Do not leave the key in the ”ON” position if the engine is not running. The battery will discharge and the ignition could be damaged.

Automatic transmission

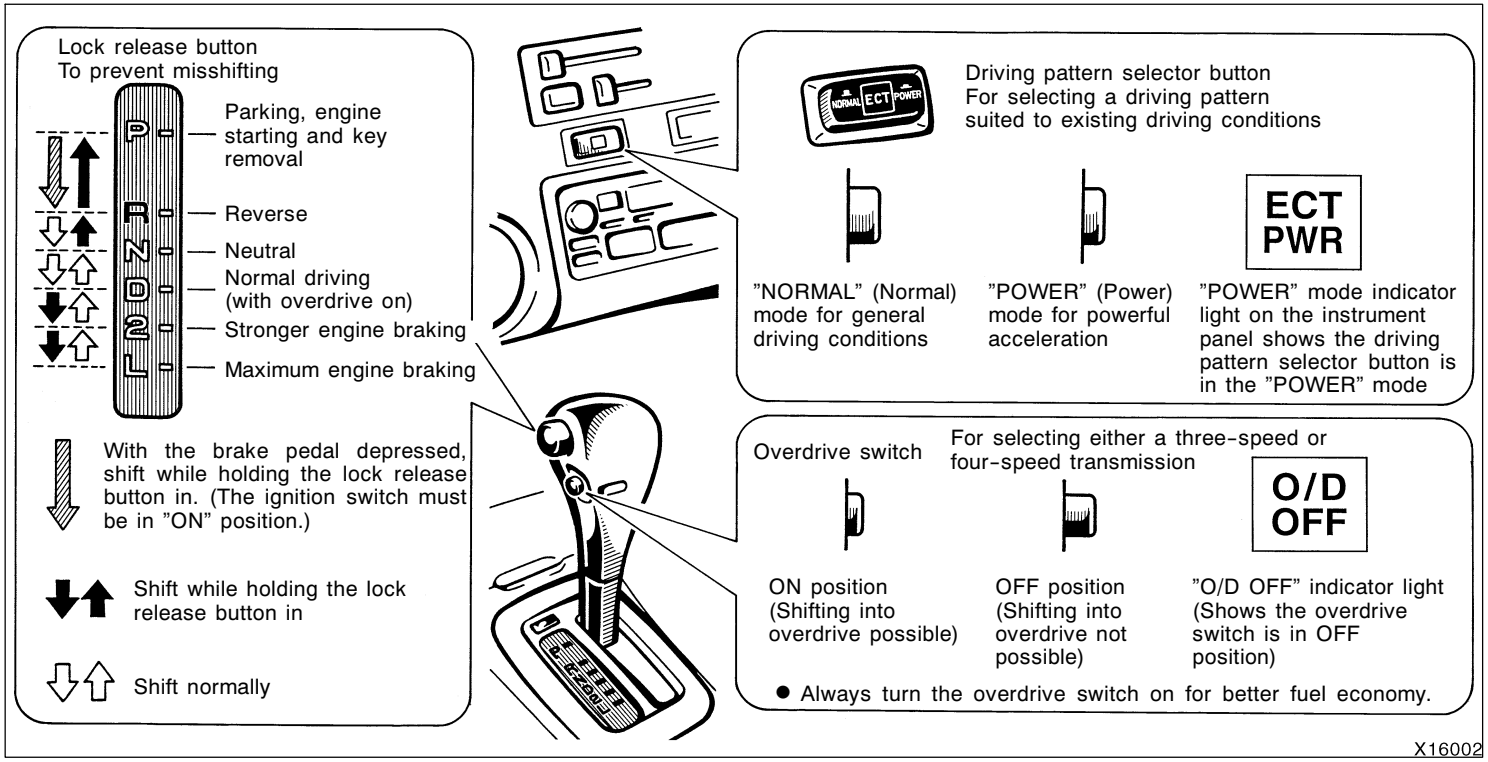

Vehicles with cruise control—When the cruise control is being used, even if you downshift the transmission by turning off the overdrive switch, engine braking will not be applied because the cruise control is not cancelled. For ways to decrease the vehicle speed, see "Cruise control" in this section.

Your automatic transmission has a shift lock system to minimize the possibility of incorrect operation. This means you can only shift out of ”P” position when the brake pedal is depressed (with the ignition switch in ”ON” position and the lock release button depressed).

(a) Normal driving

1. Start the engine as instructed in ”How to start the engine” in Section 3. The transmission must be in ”P” or ”N”.
2. After starting the engine, always push in the overdrive switch.
3. With your foot holding down the brake pedal, shift the selector lever to ”D”.

With the selector lever in the “D” position and the overdrive switch in the “ON” position, the automatic transmission will shift automatically from the first gear through the fourth gear and select the most suitable gear meeting the driving condition.

Even during ordinary driving, keep the overdrive switch turned on. (At this time, the “O/D OFF” indicator light on the instrument cluster will be off.)

Always keep the overdrive switch turned on for better fuel economy and quieter driving. If you have turned off the overdrive switch, be sure to turn the overdrive switch on again. If the engine coolant temperature is low, the transmission will not shift into the overdrive gear even with the overdrive switch on.

⚠ CAUTION

Never put your foot on the accelerator pedal while shifting.

4. Release the parking brake and brake pedal. Depress the accelerator pedal slowly for smooth starting.

(b) Using engine braking

To use engine braking, you can downshift the transmission as follows:

- Turn off the overdrive switch. The ”O/D OFF” indicator light will come on and the transmission will downshift to the third gear.
- Shift into the ”2” position. The transmission will downshift to the second gear when the vehicle speed drops down to or lower than the following speed, and stronger engine braking will be enabled.

  Two-wheel drive models

  110 km/h (68 mph)

  Four-wheel drive models

  215/70R16 tires
  100 km/h (62 mph)

  235/60R16 tires
  97 km/h (60 mph)

- Shift into the ”L” position. The transmission will downshift to the first gear when the vehicle speed drops down to or lower than the following speed, and maximum engine braking will be enabled.

  Two-wheel drive models

  50 km/h (31 mph)

  Four-wheel drive models

  215/70R16 tires
  44 km/h (27 mph)

  235/60R16 tires
  42 km/h (26 mph)

⚠ CAUTION

Be careful when downshifting on a slippery surface. Abrupt shifting could cause the vehicle to spin or skid.

(c) Using the ”2” and ”L” positions

The ”2” and ”L” positions are used for strong engine braking as described previously.

With the selector lever in ”2” or ”L”, you can start the vehicle in motion as with the lever in ”D”.

With the selector lever in ”2”, the vehicle will start in the first gear and automatically shift to second gear.

With the selector lever in ”L”, the transmission is engaged in first gear.

NOTICE

◆Be careful not to overrev the engine. Watch the tachometer to keep engine rpm from going into the red zone. The approximate maximum allowable speed for each position is given below for your reference:

Two-wheel drive models

”2” ..... 130 km/h (80 mph)
”L” ..... 72 km/h (44 mph)

Four-wheel drive models

215/70R16 tires
”2” ..... 121 km/h (75 mph)
”L” ..... 67 km/h (41 mph)
235/60R16 tires
”2” ..... 118 km/h (73 mph)
”L” ..... 65 km/h (40 mph)

◆Do not continue hill climbing or hard towing for a long time in the ”2” or ”L” position. This may cause severe automatic transmission damage from overheating. To prevent such damage, ”D” position should be used in hill climbing or hard towing.

(d) Backing up

1. Bring the vehicle to a complete stop.
2. With the brake pedal held down with your foot, shift the selector lever to the ”R” position.

NOTICE

Never shift into reverse while the vehicle is moving.

(e) Parking

1. Bring the vehicle to a complete stop.
2. Pull the parking brake lever up fully to securely apply the parking brake.
3. With the brake pedal pressed down, shift the selector lever to the ”P” position.

⚠ CAUTION

Never attempt to move the selector lever into ”P” position under any circumstances while the vehicle is moving. Serious mechanical damage and loss of vehicle control may result.

(f) Good driving practice

- If the transmission repeatedly shifts up and down between third gear and overdrive when climbing a gentle slope, the overdrive switch should be turned off. Be sure to turn the switch on immediately afterward.
- When towing a trailer, in order to maintain engine braking efficiency, do not use overdrive.

⚠ CAUTION

Always keep your foot on the brake pedal while stopped with the engine running. This prevents the vehicle from creeping.

NOTICE

Do not hold the vehicle on an upgrade with the accelerator pedal. It can cause the transmission to overheat. Always use the brake pedal or parking brake.

(g) Rocking your vehicle if stuck

⚠ CAUTION

If your vehicle becomes stuck in snow, mud, sand, etc., then you may attempt to rock the vehicle free by moving it forward and backward. Do not attempt this procedure if people or objects are anywhere near the vehicle. During the rocking operation the vehicle may suddenly move forward or backward as it becomes unstuck, causing injury or damage to nearby people or objects.

NOTICE

If you rock your vehicle, observe the following precautions to prevent damage to the transmission and other parts.

◆Do not depress the accelerator pedal while shifting the selector lever or before the transmission is completely shifted to forward or reverse gear.

◆Do not race the engine and avoid spinning the wheels.

◆If your vehicle remains stuck after rocking the vehicle several times, consider other ways such as towing.

(h) Driving in ”POWER” mode

In the ”POWER” mode, the transmission is shifted up and down at a higher vehicle speed than in the ”NORMAL” mode and a more powerful acceleration is achieved. To set the ”POWER” mode, push in the driving pattern selector button. The ”POWER” mode indicator light comes on.

For ordinary driving, Toyota recommends using the ”NORMAL” mode to improve fuel economy.

(i) If you cannot shift the selector lever out of ”P” position

If you cannot shift the selector lever from the ”P” position even though the brake pedal is depressed, use the shift lock override button. For instructions, see ”If you cannot shift automatic transmission selector lever” in Section 4.

Manual transmission

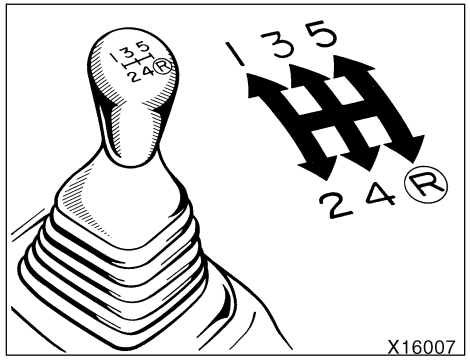

The shift pattern is as shown above.

Press the clutch pedal down fully while shifting, and then release it slowly. Do not rest your foot on the pedal while driving, because it will cause clutch trouble. And do not use the clutch to hold the vehicle when stopped on an uphill grade–use the parking brake.

Recommended shifting speeds

The transmission is fully synchronized and upshifting or downshifting is easy.

For the best compromise between fuel economy and vehicle performance, you should upshift or downshift at the following speeds:

gear	km/h (mph)
1 to 2 or 2 to 1	24 (15)
2 to 3 or 3 to 2	40 (25)
3 to 4 or 4 to 3	64 (40)
4 to 5 or 5 to 4	72 (45)

Downshift to the appropriate gear if acceleration is needed when you are cruising below the above downshifting speeds.

Upshifting too soon or downshifting too late will cause lugging and, possibly, pinging. Regularly revving the engine to maximum speed in each gear will cause excessive engine wear and high fuel consumption.

Maximum allowable speeds

To get on a highway or to pass slower traffic, maximum acceleration may be necessary. Make sure you observe the following maximum allowable speeds in each gear:

Two-wheel drive models

gear	km/h (mph)
1	47 (29)
2	95 (59)
3	144 (89)
4	198 (114)

Four-wheel drive models

215/60R16 tires

gear	km/h (mph)
1	44 (27)
2	88 (53)
3	133 (83)
4	183 (114)

235/60R16 tires

gear	km/h (mph)
1	43 (26)
2	86 (53)
3	121 (75)
4	165 (102)

NOTICE

Do not downshift if you are going faster than the maximum allowable speed for the next lower gear.

Good driving practice

- If it is difficult to shift into reverse, put the transmission in neutral, release the clutch pedal momentarily, and then try again.

- When towing a trailer, in order to maintain engine braking efficiency, do not use the fifth gear.

⚠ CAUTION

Be careful when downshifting on a slippery surface. Abrupt shifting could cause the vehicle to spin or skid.

NOTICE

Make sure the vehicle is completely stopped before shifting into reverse.

Center differential lock system (four-wheel drive models with manual transmission)

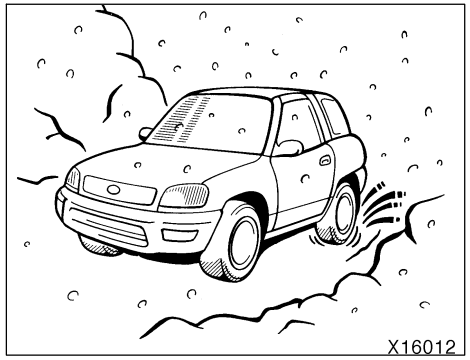

The center differential lock system is provided for use only when the vehicle does not have enough traction to move itself out of the following situations.

- All front wheels or rear wheels are off the ground or on a slippery surface.
- One of the four wheels is off the ground or on a slippery surface.

Operating precautions

- If the front wheels and rear wheels are worn unevenly, the center differential may not lock or unlock smoothly.
- Before locking the center differential, make sure the wheels have stopped spinning.
- Unlock the center differential immediately after you finish using the center differential lock system. An indicator buzzer will sound while the center differential is being unlocked.
- After you have pushed the center differential lock switch to lock and moved the vehicle a short distance, the indicator light in the instrument panel stays on. If the light either fails to come on or goes out, ask your Toyota dealer to check the electrical system and the locking mechanism.

⚠ CAUTION

The center differential must be unlocked in normal driving. Locking the center differential will result in difficult cornering control.

NOTICE

Do not drive on a dry paved surface with the center differential locked. This may damage the locking mechanism and the drive system.

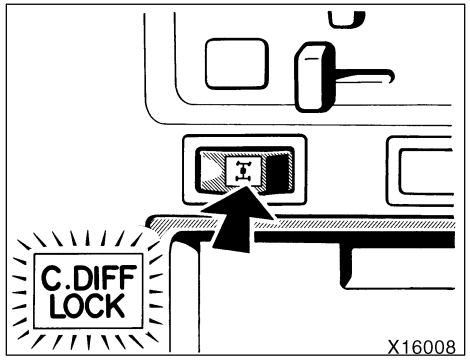

To lock the center differential:

1. Press the brake pedal and stop the wheel spinning.
2. Put the front wheels in as straight-ahead a position as possible.
3. Push the center differential lock switch and check that the indicator light in the instrument panel comes on.

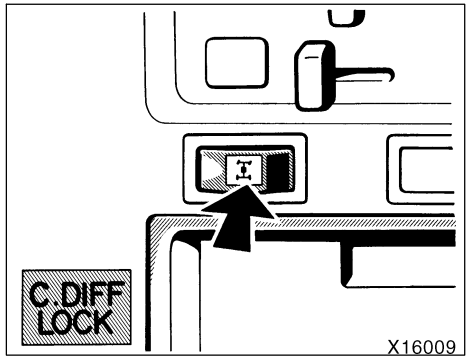

To unlock the center differential:

1. Put the front wheels in as straight-ahead a position as possible.
2. Push the center differential lock switch once again and check that the indicator light in the instrument panel goes out and that the indicator buzzer stops sounding.

The indicator buzzer will sound while the center differential is being unlocked. It stops sounding when unlocking is completed.

Sometimes complete unlocking of the center differential may take longer.

If unlocking of the center differential is not completed, check the area around you for safety, then accelerate or decelerate, or move the vehicle backward.

NOTICE

While the indicator buzzer is sounding, do not make turns, and do not put the vehicle into a garage. This may damage the locking mechanism and the drive system.

Parking brake

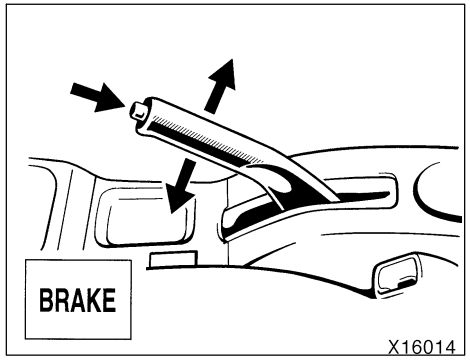

Type A

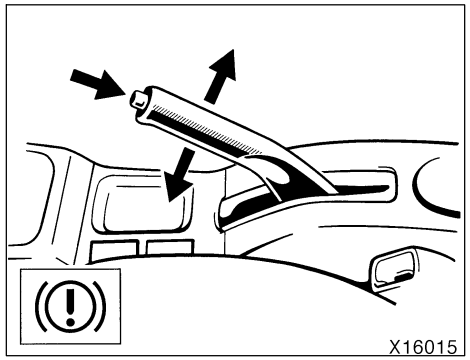

Type B

When parking, firmly apply the parking brake to avoid inadvertent creeping.

To set: Pull up the lever. For better holding power, first depress the brake pedal and hold it while setting the parking brake.
To release: Pull up the lever slightly, press the thumb button, and lower.

To remind you that the parking brake is set, the parking brake reminder light in the instrument panel remains on until you release the parking brake.

⚠ CAUTION

Before driving, be sure the parking brake is fully released and the parking brake reminder light is off.

Cruise control

The cruise control allows you to cruise the vehicle at a desired speed over 40 km/h (25 mph) even with your foot off the accelerator pedal.

Your cruising speed can be maintained up or down grades within the limits of engine performance, although a slight speed change may occur when driving up or down the grades. On steeper hills, a greater speed change will occur so it is better to drive without the cruise control.

⚠ CAUTION

- To help maintain maximum control of your vehicle, do not use the cruise control when driving in heavy or varying traffic, or on slippery (rainy, icy or snow-covered) or winding roads.
- Avoid vehicle speed increases when driving downhill. If the vehicle speed is too fast in relation to the cruise control set speed, cancel the cruise control then downshift the transmission to use engine braking to slow down.

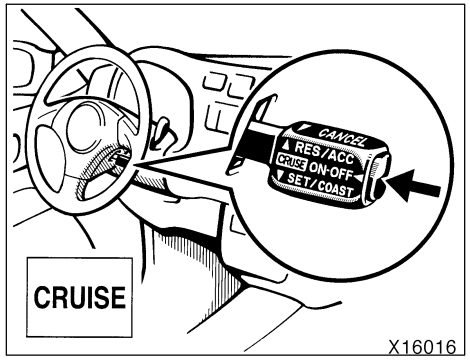

TURNING ON THE SYSTEM

To operate the cruise control, push the "CRUISE ON·OFF" switch. This turns the system on. The indicator light in the instrument panel shows that you can now set the vehicle at a desired cruising speed. Another push will turn the system completely off.

⚠ CAUTION

To avoid accidental cruise control engagement, keep the "CRUISE ON·OFF" switch off when not using the cruise control.

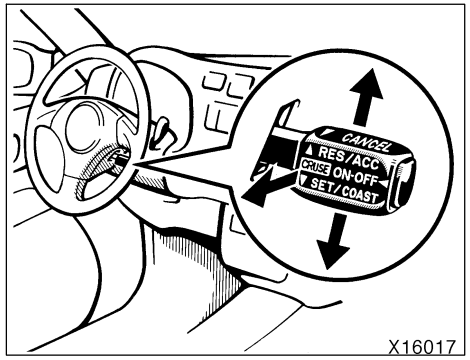

SETTING AT A DESIRED SPEED

On vehicles with automatic transmission, the transmission must be in "D" before you set the cruise control speed.

Bring your vehicle to the desired speed, push the lever down in the "SET/COAST" direction and release it. This sets the vehicle at that speed. If the speed is not satisfactory, tap the lever up for a faster speed, or tap it down for a slower speed. Each tap changes the set speed by 1.6 km/h (1.0 mph). You can now take your foot off the accelerator pedal.

If you need acceleration—for example, when passing—depress the accelerator pedal enough for the vehicle to exceed the set speed. When you release it, the vehicle will return to the speed set prior to the acceleration.

⚠ CAUTION

For manual transmission:

While driving with the cruise control on, do not shift to neutral without depressing the clutch pedal, as this may cause engine racing or overreving.

CANCELLING THE PRESET SPEED

You can cancel the preset speed by:

a. Pulling the lever in the "CANCEL" direction and releasing it.

b. Depressing the brake pedal.

c. Depressing the clutch pedal (manual transmission).

If the vehicle speed falls below about 40 km/h (25 mph), the preset speed will automatically cancel out.

If the vehicle speed drops 16 km/h (10 mph) below the preset speed, the preset speed will also automatically cancel out.

If the preset speed automatically cancels out other than for the above cases or, if the indicator light flashes several times, the cruise control may be malfunctioning. In such cases, have your vehicle checked by your Toyota dealer at the earliest opportunity.

RESETTING TO A FASTER SPEED

Push the lever up in the ”RES/ACC” direction and hold it. Release the lever when the desired speed is attained. While the lever is held up, the vehicle will gradually gain speed.

However, a faster way to reset is to accelerate the vehicle and then push the lever down in the ”SET/COAST” direction.

RESETTING TO A SLOWER SPEED

Push the lever down in the ”SET/COAST” direction and hold it. Release the lever when the desired speed is attained. While the lever is held down, the vehicle speed will gradually decrease.

However, a faster way to reset is to depress the brake pedal and then push the lever down in the ”SET/COAST” direction.

On vehicles with automatic transmission, even if you turn off the overdrive switch with the cruise control on, engine braking will not be applied because the cruise control is not cancelled. To decrease the vehicle speed, reset to a slower speed with the cruise control lever or depress the brake pedal. If you use the brake pedal, cruise control is cancelled.

RESUMING THE PRESET SPEED

If the preset speed is cancelled by pulling the control lever or by depressing the brake pedal or clutch pedal, pushing the lever up in the ”RES/ACC” direction will restore the speed set prior to cancellation.

However, once the vehicle speed falls below about 40 km/h (25 mph), the preset speed will not be resumed.

CRUISE CONTROL FAILURE WARNING

If the ”CRUISE” indicator light in the instrument cluster flashes when using the cruise control, press the ”CRUISE ON·OFF” button to turn the system off and then press it again to turn it on.

If any of the following conditions then occurs, there is some trouble in the cruise control system.

- The indicator light does not come on.
- The indicator light flashes again.
- The indicator light goes out after it comes on.

If this is the case, contact your Toyota dealer and have your vehicle inspected.

SECTION 1 - 7

OPERATION OF INSTRUMENTS AND CONTROLS

Car audio system

Reference 108
Using your audio system 108
Car audio system operating hints 119

Reference

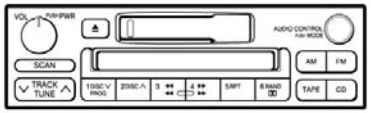

Z17003

Type 1: AM/FM ETR radio/cassette player/ compact disc auto changer controller

Z17004

Type 2: AM/FM ETR radio/compact disc player/compact disc auto changer controller

Using your audio system— —Some basics

This section describes some of the basic features on Toyota audio systems. Some information may not pertain to your system.

Your audio system works when the ignition key is in the "ACC" or "ON" position.

TURNING THE SYSTEM ON AND OFF

Push "VOL/PWR" or "PWR/VOL" to turn the audio system on and off.

Push "AM", "FM", "AM·FM", "TAPE" or "CD" to turn on that function without pushing "VOL/PWR" or "PWR/VOL".

You can turn on each player by inserting a cassette tape or compact disc.

You can turn off each player by ejecting the cassette tape or compact disc. If the audio system was previously off, then the entire audio system will be turned off when you eject the cassette tape or compact disc. If another function was previously playing, it will come on again.

SWITCHING BETWEEN FUNCTIONS

Push "AM", "FM", "AM·FM", "TAPE" or "CD" if the system is already on but you want to switch from one function to another.

TONE AND BALANCE

For details about your system's tone and balance controls, see the description of your own system.

Tone

How good an audio program sounds to you is largely determined by the mix of the treble and bass levels. In fact, different kinds of music and vocal programs usually sound better with different mixes of treble and bass.

Balance

A good balance of the left and right stereo channels and of the front and rear sound levels is also important.

Keep in mind that if you are listening to a stereo recording or broadcast, changing the right/left balance will increase the volume of one group of sounds while decreasing the volume of another.

YOUR RADIO ANTENNA

To lower a manual antenna, carefully push it down.

NOTICE

To prevent damage to the antenna, make sure it is retracted before driving your Toyota through an automatic car wash.

YOUR CASSETTE PLAYER

When you insert a cassette, the exposed tape should be to the right.

NOTICE

Do not oil any part of the player and do not insert anything other than cassette tapes into the slot, or the tape player may be damaged.

YOUR COMPACT DISC PLAYER

When you insert a disc, gently push it in with the label side up. (The player will automatically eject a disc if the label side is down.) The compact disc player will play from track 1 through the end of the disc. Then it will play from track 1 again.

NOTICE

Never try to disassemble or oil any part of the compact disc player. Do not insert anything except a compact disc into the slot.

8 cm (3 in.) compact disc singles

Your compact disc player does not need an adaptor to play compact disc singles. Compact disc singles are about 8 cm (3 in.) in diameter-smaller than standard discs.

After you eject a compact disc single, do not insert a standard 12 cm (5 in.) disc until ”DISC” disappears from the display.

NOTICE

Do not use an adaptor for compact disc singles—it could cause tracking errors or interfere with the ejection of compact discs.

—Controls and features

▶Type 1

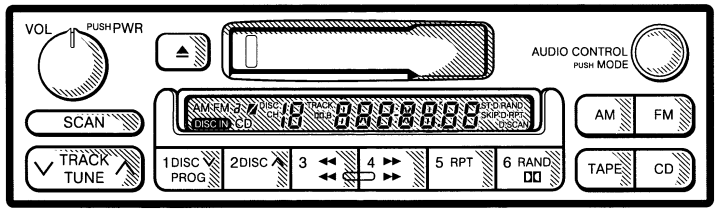

Z17021

Details of specific buttons, controls, and features are described in the alphabetical listing that follows.

1 2 3 4 5 6 (Preset buttons)

These buttons are used to preset and tune in radio stations.

To preset a station to a button: Tune in the desired station (see ”TUNE” button). Push and hold down the button until you hear a beep—this will set the station to the button. The button number will appear on the display.

To tune in to a preset station: Push the button for the station you want. The button number and station frequency will appear on the display.

These systems can store one AM and two FM stations for each button (The display will show ”AM”, ”FM1” or ”FM2” when you push ”AM” or ”FM”).

⏏ (Eject button)

Push this button to eject a cassette.

After you turn the ignition to ”LOCK”, you will be able to eject a cassette but you will not be able to reinsert it.

◀◀/▶▶ (Reverse/Fast forward buttons)

Cassette Player

Push the fast forward button to fast forward a cassette tape. ”FF” will appear on the display. Push the reverse button to rewind a tape. ”REW” will appear on the display.

To stop the tape while it is fast forwarding, push the fast forward button or ”TAPE”; to stop the tape while it is rewinding, push the reverse button or ”TAPE”.

If a tape side rewinds completely, the cassette player will stop and then play that same side. If a tape fast forwards completely, the cassette player will play the other side of the tape, using the auto-reverse feature.

Compact Disc Player

If you want to fast forward or reverse through a compact disc track, push and hold in the fast forward or reverse button. When you release the button, the compact disc player will resume playing.

AM

Push ”AM” to switch the AM band. ”AM” will appear on the display.

If the audio system is off, you can turn on the radio by pushing ”AM”. Also, push ”AM” to switch from cassette or compact disc operation to radio operation.

AUDIO CONTROL / MODE

Manual tone adjustment function—

This knob is used to adjust the tone manually.

For low-pitch tone adjustment, push ”AUDIO CONTROL / MODE” repeatedly until ”BAS” appears on the display. Then turn the knob to suit your preference.

The display will show the range from ”BAS -5” to ”BAS 5”.

For high-pitch tone adjustment, push ”AUDIO CONTROL / MODE” repeatedly until ”TRE” appears on the display. Then turn the knob to suit your preference.

The display will show the range from ”TRE -5” to ”TRE 5”.

Sound balance adjustment function—

This knob is also used to adjust the sound balance between the front and rear, and the right and left speakers.

For front/rear adjustment, push ”AUDIO CONTROL / MODE” repeatedly until ”FAd” appears on the display. Then turn the knob to adjust the front/rear balance.

The display will show the range from ”FAd F7” to ”FAd R7”.

For left/right adjustment, push ”AUDIO CONTROL / MODE” repeatedly until ”BAL” appears on the display. Then turn the knob to adjust the left/right balance.

The display will show the range from ”BAL L7” to ”BAL R7”.

CD (Compact Disc)

Push ”CD” to switch from radio or cassette operation to compact disc operation. If the audio system is off, you can turn on the compact disc player by pushing ”CD”. In both cases, a disc must already be loaded in the player.

When the audio is set into compact disc operation, the display shows the track or, track and disc number currently being played. Each time you push ”CD”, the system changes between single disc player and automatic changer.

If the player malfunctions, your audio system will display one of the six following error messages.

If ”WAIT” appears on the display, it indicates that the inside of the player unit may be too hot due to the very high ambient temperature. Remove the disc or magazine from the player and allow the player to cool down.

If ”Err 1” appears on the display, it indicates the disc is dirty, damaged, or it was inserted up-side down. Clean the disc or insert it correctly.

If ”Err 2” appears on the display, it indicates no disc is loaded inside the magazine, insert a disc.

If ”Err 3” or ”Err 4” on the display, it indicates there is a trouble inside the system. Eject the disc or magazine. Set the disc or magazine again.

If ”OPEn” appears on the display, it indicates the compact disc auto changer lid is open. Close the compact disc auto changer lid.

If the malfunction is not rectified, take your vehicle to your Toyota dealer.

DISC ◻ ◻

Compact disc auto changer only—

By using this button, you can select a disc you wish to listen to.

Push either side of the button until the number of the disc you want to listen to appears on the display.

Dolby® DD B NR*

If you are listening to a tape that was recorded with Dolby® B Noise Reduction, push the button marked with the double-D symbol. The double-D symbol will appear on the display. Push the button again to turn off Dolby® B NR.

The Dolby NR mode reduces tape noise by about 10 dB. For best sound reproduction, play your tapes with this button on or off according to the mode used for recording the tape.

*: Dolby noise reduction manufactured under license from Dolby Laboratories Licensing Corporation. “DOLBY” and the double D symbol DD are trademarks of Dolby Laboratories Licensing Corporation.

FM

Push ”FM” to switch the FM band. ”FM1” or ”FM2” will appear on the display. This system allows you to set twelve FM stations, two for each button.

If the audio system is off, you can turn on the radio by pushing ”FM”. Also, push ”FM” to switch from cassette or compact disc operation to radio operation.

PROG (Program)

Push "PROG" to select the other side of a cassette tape. The display indicates which side is currently selected ("◢ " indicates top side, "◤" indicates bottom side).

Auto-reverse feature: After the cassette player reaches the end of a tape side, it automatically reverses and begins to play the other side. This is true whether the cassette was playing or fast forwarding.

RAND (Random)

There are two random features—you can either listen to the tracks on all the compact discs in the magazine in random order, or only listen to the tracks on a specific compact disc in random order.

To randomly play the tracks on a disc:
Quickly push and release "RAND". "RAND" will appear on the display. The disc you are listening to will play in random order. If you hear a beep, you held the button too long, and the player will play all the tracks in the magazine in random order. To turn off the random feature, push the "RAND" a second time.

Compact disc auto changer only—

To randomly play all the tracks in the magazine:
Push and hold "RAND" until you hear a beep. "D·RAND" will appear on the display and the player will perform all the tracks on all the discs in the magazine in random order. To turn off the random feature, push "RAND" a second time.

RPT (Repeat)

There are two repeat features—you can either replay a disc track or a whole compact disc.

Repeating a track:
Quickly push and release "RPT" while the track is playing. "RPT" will appear on the display. If you hear a beep, you held the button too long, and the player will repeat the whole disc. When the track ends, it will automatically be replayed. This process will be continued until you push the button again to turn off the repeat feature.

Compact disc auto changer only—

Repeating a disc:
Push and hold "RPT" until you hear a beep. "D·RPT" will appear on the display. The player will repeat all the tracks on the disc you are listening to. When the disc ends, the player will automatically go back to the top track of the disc and replay. This process will be continued until you push the button again to turn off the repeat feature.

SCAN

Radio

You can either scan all the frequencies on a band or scan only the preset stations for that band.

To scan all the frequencies:
Quickly push and release "SCAN". If you hear a beep, you held the button too long, and the radio will scan the preset stations. The radio will find the next station up the station band, stay there for a few seconds, and then scan again. To select a station, push "SCAN" a second time.

To scan the preset stations:
Push and hold "SCAN" until you hear a beep. The radio will tune in the next preset station up the band, stay there for a few seconds, and then move to the next preset station. To select a station, push "SCAN" a second time.

Compact disc player

There are two scan features—you can either scan the tracks on a specific disc or scan the first tracks of all the discs in the magazine.

Scanning for the tracks on a disc:
Quickly push and release ”SCAN”. ”SCAN” will appear on the display and the player will scan all the tracks on the disc you are listening to. If you hear a beep, you held the button too long, and the player will scan the first tracks of all the discs in the magazine. To select a track, push the ”SCAN” a second time. If the player scanned all the tracks on the disc, it will stop scanning.

Compact disc auto changer only—

Scanning for the first tracks of all the discs in the magazine:
Push and hold ”SCAN” until you hear a beep. ”D·SCAN” will appear on the display and the player will perform the first track of the next disc. To select a disc, push the ”SCAN” a second time. If the player has scanned all the discs, it will stop scanning.

ST (Stereo reception) display

Your radio automatically changes to stereo reception when a stereo broadcast is received. ”ST” appears on the display. If the signal becomes weak, the radio reduces the amount of channel separation to prevent the weak signal from creating noise. If the signal becomes extremely weak, the radio switches from stereo to mono reception.

TAPE

Push ”TAPE” to switch from radio or compact disc operation to cassette operation. If the audio system is off, you can turn on the cassette player by pushing ”TAPE”. In both cases, a cassette must already be loaded in the player.

TRACK (Track up/down button):
Compact disc player

By using this button, you can skip up or down to a different track.

Push either side of the track button until the number of the track you want to listen to appears on the display. If you want to return to the beginning of the current track, push the down side of the button one time, quickly.

TUNE

Tuning

Your Toyota has an electronic tuning radio (ETR). Push and release the ”◻” (up) or ”◻” (down) side of ”TUNE” to step up or down the station band. (If you hear a beep, you held the button too long and the radio will go into the seek mode.)

Seeking

In the seek mode, the radio finds and plays the next station up or down the station band.

To seek a station, push and hold the ”◻” or ”◻” side of ”TUNE” until you hear a beep. Do this again to find another station.

VOL/PWR (Volume/Power)

Push ”VOL/PWR” to turn the audio system on and off. Turn ”VOL/PWR” to adjust the volume.

▶Type 2

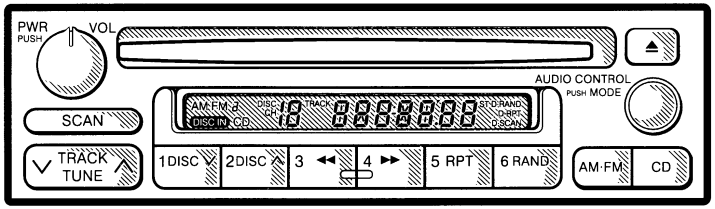

Z17022

Details of specific buttons, controls, and features are described in the alphabetical listing that follows.

1 2 3 4 5 6 (Preset buttons)

These buttons are used to preset and tune in radio stations.

To preset a station to a button: Tune in the desired station (see ”TUNE” button). Push and hold down the button until you hear a beep—this will set the station to the button. The button number will appear on the display.

To tune in to a preset station: Push the button for the station you want. The button number and station frequency will appear on the display.

These systems can store one AM and two FM stations for each button (The display will show ”AM”, ”FM1” or ”FM2” when you push ”AM·FM”).

⏏ (Eject button)

Push this button to eject a compact disc.

After you turn the ignition to ”LOCK”, you will be able to eject a disc but you will not be able to reinsert it.

◀◀/▶▶ (Reverse/Fast forward buttons)

If you want to fast forward or reverse through a compact disc track, push and hold in the fast forward or reverse button. When you release the button, the compact disc player will resume playing.

AM/FM

Push ”AM·FM” to switch between the AM and FM bands. ”AM”, ”FM1” or ”FM2” will appear on the display. These systems allow you to set twelve FM stations, two for each button.

If the audio system is off, you can turn on the radio by pushing ”AM·FM”. Also, push ”AM·FM” to switch from compact disc operation to radio operation.

AUDIO CONTROL / MODE

Manual tone adjustment function—

This knob is used to adjust the tone manually.

For low-pitch tone adjustment, push ”AUDIO CONTROL / MODE” repeatedly until ”BAS” appears on the display. Then turn the knob to suit your preference.

The display will show the range from ”BAS -5” to ”BAS 5”.

For high-pitch tone adjustment, push ”AUDIO CONTROL / MODE” repeatedly until ”TRE” appears on the display. Then turn the knob to suit your preference.

The display will show the range from ”TRE -5” to ”TRE 5”.

Sound balance adjustment function—

This knob is also used to adjust the sound balance between the front and rear, and the right and left speakers.

For front/rear adjustment, push ”AUDIO CONTROL / MODE” repeatedly until ”FAd” appears on the display. Then turn the knob to adjust the front/rear balance.

The display will show the range from ”FAd F7” to ”FAd R7”.

For left/right adjustment, push ”AUDIO CONTROL / MODE” repeatedly until ”BAL” appears on the display. Then turn the knob to adjust the left/right balance.

The display will show the range from ”BAL L7” to ”BAL R7”.

CD (Compact Disc)

Push ”CD” to switch from radio operation to compact disc operation. If the audio system is off, you can turn on the compact disc player by pushing ”CD”. In both cases, a disc must already be loaded in the player.

When the audio is set into compact disc operation, the display shows the track or, track and disc number currently being played. Each time you push ”CD”, the system changes between built-in single disc player and automatic changer.

If the player malfunctions, your audio system will display one of the six following error messages.

If ”WAIT” appears on the display, it indicates that the inside of the player unit may be too hot due to the very high ambient temperature. Remove the disc or magazine from the player and allow the player to cool down.

If ”Err 1” appears on the display, it indicates the disc is dirty, damaged, or it was inserted up-side down. Clean the disc or insert it correctly.

If ”Err 2” appears on the display, it indicates no disc is loaded inside the magazine, insert a disc.

If ”Err 3” or ”Err 4” on the display, it indicates there is a trouble inside the system. Eject the disc or magazine. Set the disc or magazine again.

If ”OPEn” appears on the display, it indicates the compact disc auto changer lid is open. Close the compact disc auto changer lid.

If the malfunction is not rectified, take your vehicle to your Toyota dealer.

DISC □ □

Compact disc auto changer only—

By using this button, you can select a disc you wish to listen to.

Push either side of the button until the number of the disc you want to listen to appears on the display.

PWR/VOL (Power/Volume)

Push ”PWR/VOL” to turn the audio system on and off. Turn ”PWR/VOL” to adjust the volume.

RAND (Random)

There are two random features—you can either listen to the tracks on all the compact discs in the magazine in random order, or only listen to the tracks on a specific compact disc in random order.

To randomly play the tracks on a disc: Quickly push and release ”RAND”. ”RAND” will appear on the display. The disc you are listening to will play in random order. If you hear a beep, you held the button too long, and the player will play all the tracks in the magazine in random order. To turn off the random feature, push the ”RAND” a second time.

Compact disc auto changer only—

To randomly play all the tracks in the magazine:
Push and hold ”RAND” until you hear a beep. ”D·RAND” will appear on the display and the player will perform all the tracks on all the discs in the magazine in random order. To turn off the random feature, push ”RAND” a second time.

RPT (Repeat)

There are two repeat features—you can either replay a disc track or a whole compact disc.

Repeating a track:
Quickly push and release ”RPT” while the track is playing. ”RPT” will appear on the display. If you hear a beep, you held the button too long, and the player will repeat the whole disc. When the track ends, it will automatically be replayed. This process will be continued until you push the button again to turn off the repeat feature.

Compact disc auto changer only—

Repeating a disc:
Push and hold ”RPT” until you hear a beep. ”D·RPT” will appear on the display. The player will repeat all the tracks on the disc you are listening to. When the disc ends, the player will automatically go back to the top track of the disc and replay. This process will be continued until you push the button again to turn off the repeat feature.

SCAN

Radio

You can either scan all the frequencies on a band or scan only the preset stations for that band.

To scan all the frequencies:
Quickly push and release ”SCAN”. If you hear a beep, you held the button too long, and the radio will scan the preset stations. The radio will find the next station up the station band, stay there for a few seconds, and then scan again. To select a station, push ”SCAN” a second time.

To scan the preset stations:
Push and hold ”SCAN” until you hear a beep. The radio will tune in the next preset station up the band, stay there for a few seconds, and then move to the next preset station. To select a station, push ”SCAN” a second time.

Compact disc player

There are two scan features—you can either scan the tracks on a specific disc or scan the first tracks of all the discs in the magazine.

Scanning for the tracks on a disc:
Quickly push and release ”SCAN”. ”SCAN” will appear on the display and the player will scan all the tracks on the disc you are listening to. If you hear a beep, you held the button too long, and the player will scan the first tracks of all the discs in the magazine. To select a track, push the ”SCAN” a second time. If the player scanned all the tracks on the disc, it will stop scanning.

Compact disc auto changer only—

Scanning for the first tracks of all the discs in the magazine:
Push and hold ”SCAN” until you hear a beep. ”D·SCAN” will appear on the display and the player will perform the first track of the next disc. To select a disc, push the ”SCAN” a second time. If the player has scanned all the discs, it will stop scanning.

ST (Stereo reception) display

Your radio automatically changes to stereo reception when a stereo broadcast is received. ”ST” appears on the display. If the signal becomes weak, the radio reduces the amount of channel separation to prevent the weak signal from creating noise. If the signal becomes extremely weak, the radio switches from stereo to mono reception.

TRACK (Track up/down button):
Compact disc player

By using this button, you can skip up or down to a different track.

Push either side of the track button until the number of the track you want to listen to appears on the display. If you want to return to the beginning of the current track, push the down side of the button one time, quickly.

TUNE (Tuning)

Tuning

Your Toyota has an electronic tuning radio (ETR). Push and release the ”◻” (up) or ”◻” (down) side of ”TUNE” to step up or down the station band. (If you hear a beep, you held the button too long and the radio will go into the seek mode.)

Seeking

In the seek mode, the radio finds and plays the next station up or down the station band.

To seek a station, push and hold the ”◻” or ”◻” side of ”TUNE” until you hear a beep. Do this again to find another station.

Car audio system operating hints

NOTICE

To ensure the correct audio system operation:

- Be careful not to spill beverages over the audio system.
- Do not put anything other than a cassette tape or Compact Disc into the slot.
- The use of cellular phone inside or near the vehicle may cause a noise from the speakers of the audio system which you are listening to. However, this does not indicate a malfunction.

RADIO RECEPTION

Usually, a problem with radio reception does not mean there is a problem with your radio—it is just the normal result of conditions outside the vehicle.

For example, nearby buildings and terrain can interfere with FM reception. Power lines or telephone wires can interfere with AM signals. And of course, radio signals have a limited range. The farther you are from a station, the weaker its signal will be. In addition, reception conditions change constantly as your vehicle moves.

Here are some common reception problems that probably do not indicate a problem with your radio:

FM

Fading and drifting stations—Generally, the effective range of FM is about 40 km (25 miles). Once outside this range, you may notice fading and drifting, which increase with the distance from the radio transmitter. They are often accompanied by distortion.

Multi-path—FM signals are reflective, making it possible for two signals to reach your antenna at the same time. If this happens, the signals will cancel each other out, causing a momentary flutter or loss of reception.

Static and fluttering—These occur when signals are blocked by buildings, trees, or other large objects. Increasing the bass level may reduce static and fluttering.

Station swapping—If the FM signal you are listening to is interrupted or weakened, and there is another strong station nearby on the FM band, your radio may tune in the second station until the original signal can be picked up again.

AM

Fading—AM broadcasts are reflected by the upper atmosphere–especially at night. These reflected signals can interfere with those received directly from the radio station, causing the radio station to sound alternately strong and weak.

Station interference—When a reflected signal and a signal received directly from a radio station are very nearly the same frequency, they can interfere with each other, making it difficult to hear the broadcast.

Static—AM is easily affected by external sources of electrical noise, such as high tension power lines, lightening, or electrical motors. This results in static.

CARING FOR YOUR CASSETTE PLAYER AND TAPES

For the best performance for your cassette player and tapes:

Clean the tape head and other parts regularly.

- A dirty tape head or tape path can decrease sound quality and tangle your cassette tapes. The easiest way to clean them is by using a cleaning tape. (A wet type is recommended.)

Use high-quality cassettes.

- Low-quality cassette tapes can cause many problems, including poor sound, inconsistent playing speed, and constant auto-reversing. They can also get stuck or tangled in the cassette player.
- Do not use a cassette if it has been damaged or tangled or if its label is peeling off.
- Do not leave a cassette in the player if you are not listening to it, especially if it is hot outside.
- Store cassettes in their cases and out of direct sunlight.
- Avoid using cassettes with a total playing time longer than 100 minutes (50 minutes per side). The tape used in these cassettes is thin and could get stuck or tangled in the cassette player.

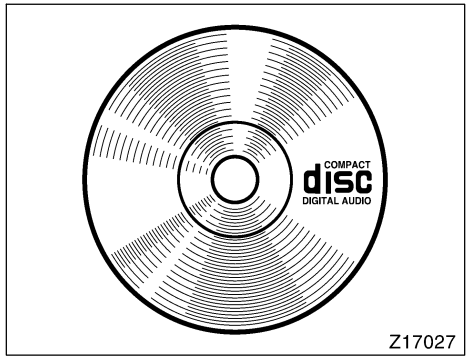

CARING FOR YOUR COMPACT DISC PLAYER AND DISCS

- Use only compact discs labeled as shown.
- Extremely high temperatures can keep your compact disc player from working. On hot days, use the air conditioning to cool the vehicle interior before you listen to a disc.
- Bumpy roads or other vibrations may make your compact disc player skip.
- If moisture gets into your compact disc player, you may not hear any sound even though your compact disc player appears to be working. Remove the disc from the player and wait until it dries.

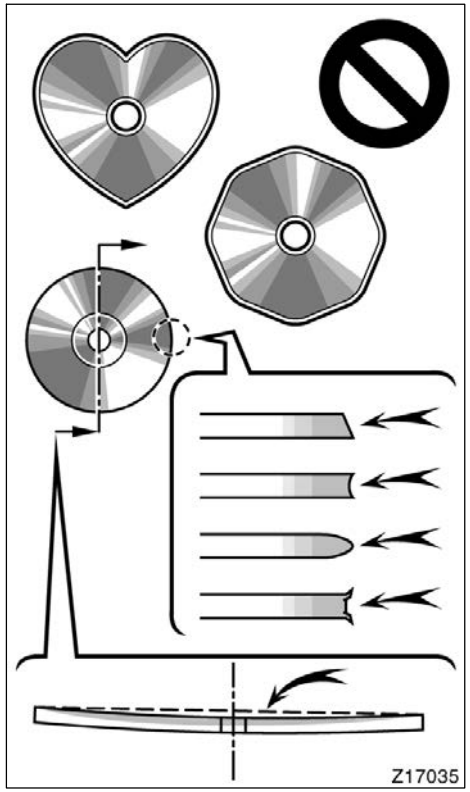

- Your compact disc player cannot play special shaped or low-quality compact discs such as those shown here. Do not use them as the player could be damaged.
- Handle compact discs carefully, especially when you are inserting them. Hold them on the edge and do not bend them. Avoid getting fingerprints on them, particularly on the shiny side.
- Dirt, scrapes, warping, pin holes, or other disc damage could cause the player to skip or to repeat a section of a track. (To see a pin hole, hold the disc up to the light.)
- Remove discs from the compact disc player when you are not listening to them. Store them in their plastic cases away from moisture, heat, and direct sunlight.

To clean a compact disc: Wipe it with a soft, lint-free cloth that has been dampened with water. Wipe in a straight line from the center to the edge of the disc (not in circles). Dry it with another soft, lint-free cloth. Do not use a conventional record cleaner or anti-static device.

⚠ CAUTION

Compact disc players use an invisible laser beam which could cause hazardous radiation exposure if directed outside the unit. Be sure to operate the player correctly.

SECTION 1 - 8

OPERATION OF INSTRUMENTS AND CONTROLS

Air conditioning system

Controls 124
Air flow selector settings 127
Operating tips 127
Instrument panel vents 129

Controls

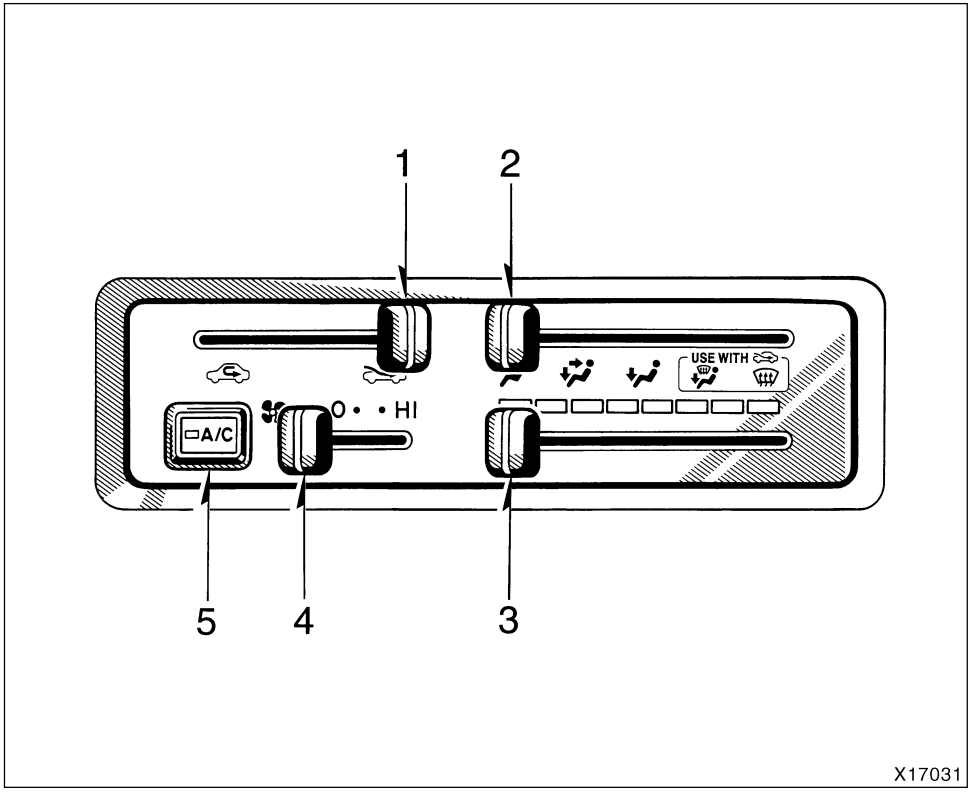

1. Air Intake Selector
2. Air Flow Selector
3. Temperature Selector
4. Fan Speed Selector
5. ”A/C” Button (on some models)

Fan speed selector

Move the lever to adjust the fan speed—to the right to increase, to the left to decrease.

Temperature selector

Move the lever to adjust the temperature—to the right to warm, to the left to cool.

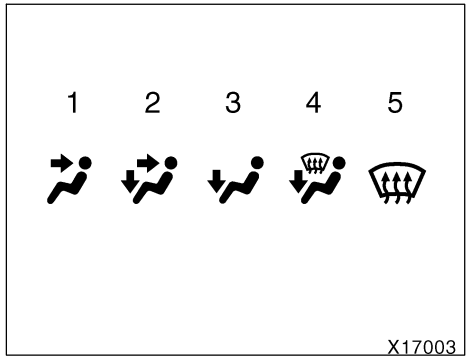

Air flow selector

Move the lever to select the vents used for air flow.

1. Panel—Air flows mainly from the instrument panel vents.
2. Bi-level—Air flows from both the floor vents and the instrument panel vents.
3. Floor—Air flows mainly from the floor vents.
4. Floor/Windshield—Air flows mainly from the floor vents and windshield vents.

   Use with the air intake selector positioned in Fresh.
5. Windshield—Air flows mainly from the windshield vents.

   Use with the air intake selector positioned in Fresh.

For details about air flow selector settings, see the illustration after ”A/C” button.

Turning the Air Flow Selector to windshield position turns on the defroster to clear the front view more quickly.

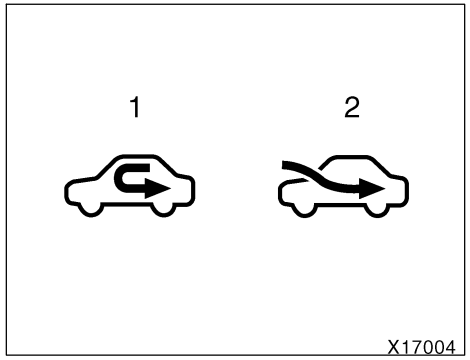

Air intake selector

Move the lever to select the air source.

1. Recirculate—Recirculates the air inside the vehicle.
2. Fresh—Draws outside air into the system.

”A/C” button

To turn on the air conditioning, press the ”A/C” button. The ”A/C” button indicator will come on. To turn the air conditioning off, press the button again.

If the ”A/C” button indicator flashes, there is a problem in the air conditioning system and the air conditioning automatically shuts off. If this happens, take your vehicle to a Toyota dealer for service.

Air flow selector settings

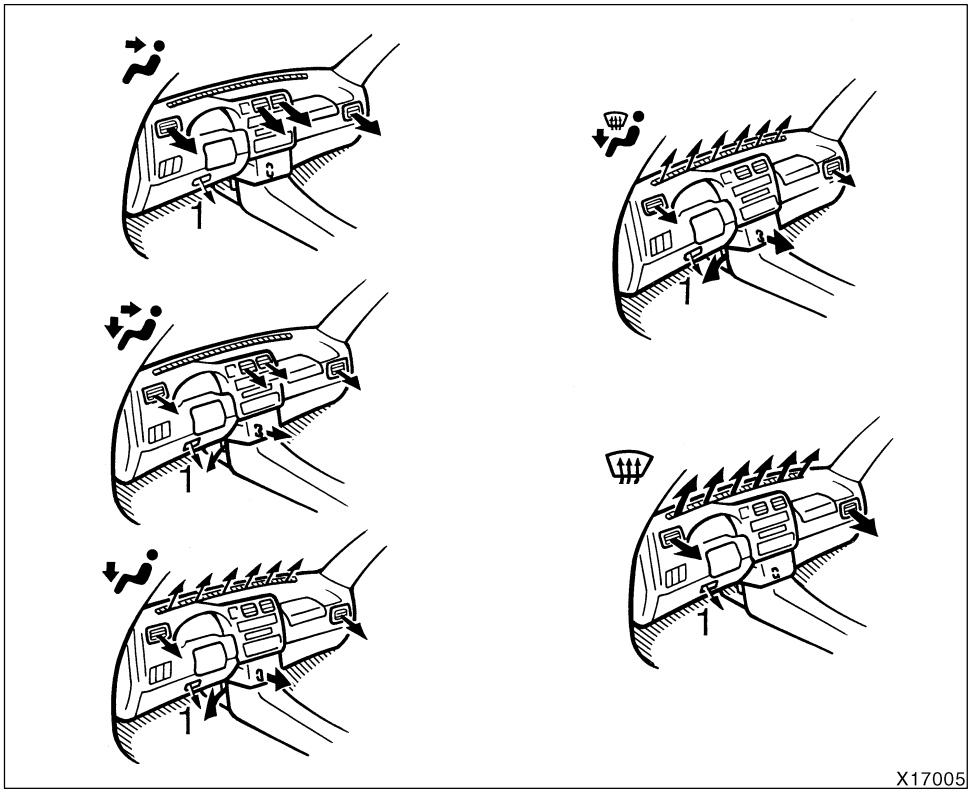

1: For air conditioning

Operating tips

- To cool off your Toyota after it has been parked in the hot sun, drive with the windows open for a few minutes. This vents the hot air, allowing the air conditioning to cool the interior more quickly.
- Make sure the air intake grilles in front of the windshield are not blocked (by leaves or snow, for example).
- On humid days, do not blow cold air on the windshield. The windshield could fog up because of the difference in air temperature on the inside and outside of the windshield.
- Keep the area under the front seats clear to allow air to circulate throughout the vehicle.
- On cold days, move the fan speed to ”HI” for a minute to help clear the intake ducts of snow or moisture. This can reduce the amount of fogging on the windows.
- When driving on dusty roads, close all windows. If dust thrown up by the vehicle is still drawn into the vehicle after closing the windows, it is recommended that the air intake selector be set to FRESH and the fan speed selector to any setting except ”OFF”.

- If following another vehicle on a dusty road, or driving in windy and dusty conditions, it is recommended that the air intake selector be temporarily set to RECIRCULATE, which will close off the outside passage and prevent outside air and dust from entering the vehicle interior.

Heating

For best results, set controls to:

Fan speed—Any setting except ”OFF” Temperature—Towards WARM (red zone) Air intake—FRESH (outside air) Air flow—FLOOR Air conditioning—OFF

- For quick heating, select recirculated air for a few minutes. To keep the windows from fogging, select fresh after the vehicle interior has been warmed.
- Press the ”A/C” button on for dehumidified heating.
- Choose floor/windshield air flow to heat the vehicle interior while defrosting or defogging the windshield.

Air conditioning

For best results, set controls to:

Fan speed—Any setting except ”OFF” Temperature—Towards COLD (blue zone) Air intake—FRESH (outside air) Air flow—PANEL Air conditioning—ON

- For quick cooling, move the air intake selector to recirculate for a few minutes.

Ventilation

For best results, set controls to:

Fan speed—Any setting except ”OFF” Temperature—Towards COLD (blue zone) Air intake—FRESH (outside air) Air flow—PANEL Air conditioning—OFF

Defogging

The inside of the windshield

For best results, set controls to:

Fan speed—Any setting except ”OFF” Temperature—Towards WARM (red zone) to heat; COLD (blue zone) to cool Air intake—FRESH (outside air) Air flow—WINDSHIELD

Turning the Air Flow Selector to windshield position turns on the defroster to clear the front view more quickly.

Vehicles with ”A/C” button—

Press the ”A/C” button for dehumidified heating or cooling. This setting clears the front view more quickly.

- On humid days, do not blow cold air on the windshield—the difference between the outside and inside temperatures could make the fogging worse.

Defrosting

The outside of the windshield

For best results, set controls to:

Fan speed—Any setting except ”OFF” Temperature—Towards WARM (red zone) Air intake—FRESH (outside air) Air flow—WINDSHIELD

Turning the Air Flow Selector to windshield position turns on the defroster to clear the front view more quickly.

Vehicles with ”A/C” button—

Press the ”A/C” button for dehumidified heating or cooling. This setting clears the front view more quickly.

- To heat the vehicle interior while defrosting the windshield, choose floor/windshield air flow.

Instrument panel vents

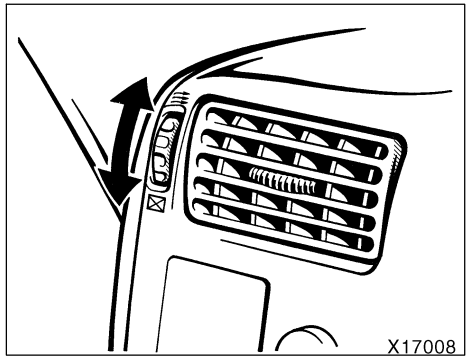

Side vents

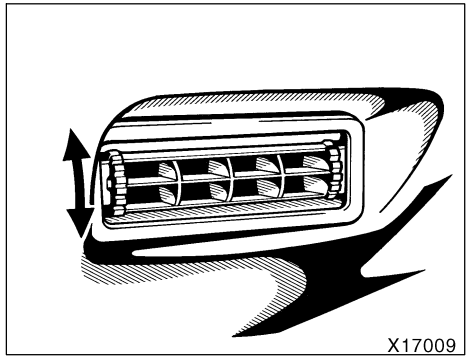

Lower vent

If air flow control is not satisfactory, check the instrument panel vents. The instrument panel vents may be opened or closed as shown.

SECTION 1 - 9

OPERATION OF INSTRUMENTS AND CONTROLS

Other equipment

Clock 132
Cigarette lighter and ashtray 132
Power outlet 133
Glove box 134
Auxiliary box 134
Floor mat 135

Clock

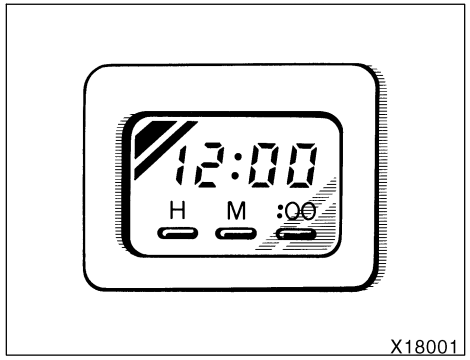

The digital clock indicates the time.

The key must be in the ”ACC” or ”ON” position.

To reset the hour: Push the ”H” button.
To reset the minutes: Push the ”M” button.

If quick adjustment to a full hour is desired, push the ”:00” button.

For example, if the ”:00” button is depressed when the time is between 1:01—1:29, the time will change to 1:00. If the time is between 1:30—1:59, the time will change to 2:00.

If the electrical power source has been disconnected from the clock, the time display will automatically be set to 1:00 (one o’clock).

When the instrument panel lights are turned on, the brightness of the time indication will be reduced.

Cigarette lighter and ashtray

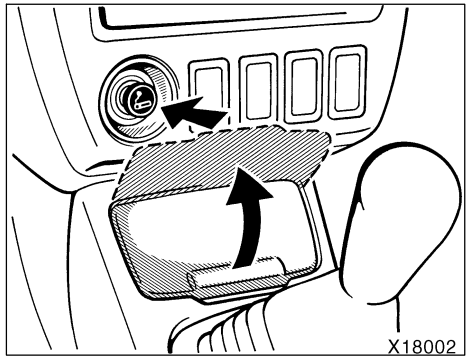

CIGARETTE LIGHTER

To use the cigarette lighter, press it in. When it becomes heated, it automatically pops out ready for use.

If the engine is not running, the key must be in the ”ACC” position.

Do not hold the cigarette lighter pressed in.

Use a Toyota genuine cigarette lighter or equivalent for replacement.

ASHTRAY

To use the ashtray, open the cover.

When finished with your cigarette, thoroughly extinguish it in the ashtray to prevent other cigarette butts from catching fire. After using the ashtray, close the ashtray cover completely.

To remove the ashtray, open the ashtray cover and pull it out.

⚠ CAUTION

To reduce the of injury in case of an accident or sudden stop while driving, always close the ashtray cover completely after using.

Power outlet (4-door hardtop)

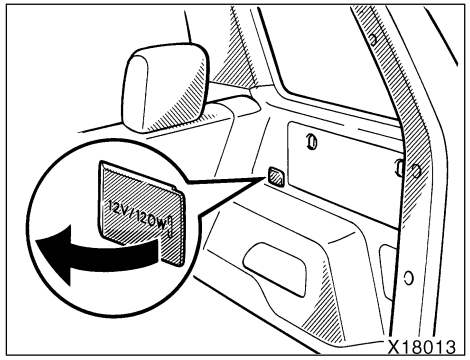

The power outlet is designed for power supply for car accessories.

The key must be in the "ACC" or "ON" position for the power outlets to be used.

NOTICE

- To prevent the fuse from being blown, do not use the electricity over the total vehicle capacity of 12V/120W.
- To prevent the battery from being discharged, do not use the power outlet longer than necessary when the engine is not running.
- Close the power outlet lid when the power outlet is not in use. Inserting a foreign object other than the appropriate plug that fits the outlet, or allowing any liquid into the outlet may cause electrical failure or short circuits.

Glove box

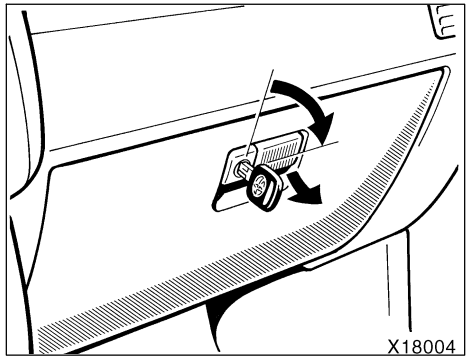

To use the glove box, do this.

To open: Pull the lever.
To lock: Insert the master key and turn it clockwise.

⚠ CAUTION

To reduce the chance of injury in case of an accident or a sudden stop, always keep the glove box door closed while driving.

Auxiliary box

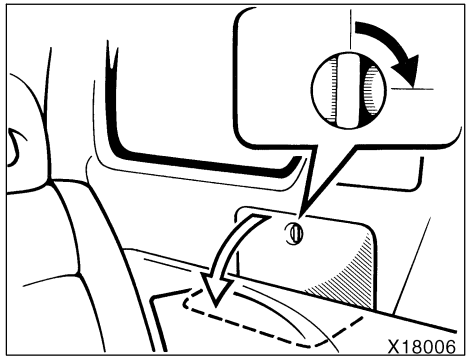

2-door hardtop and soft-top (left side)

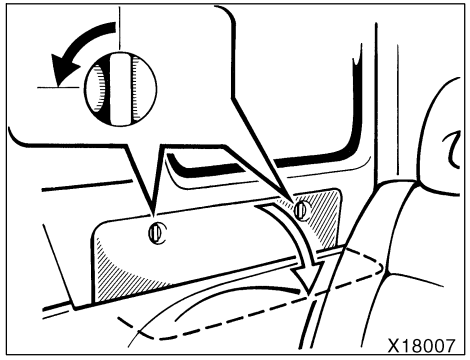

2-door hardtop and soft-top (right side), and 4-door hardtop

To open the box, turn the knob.

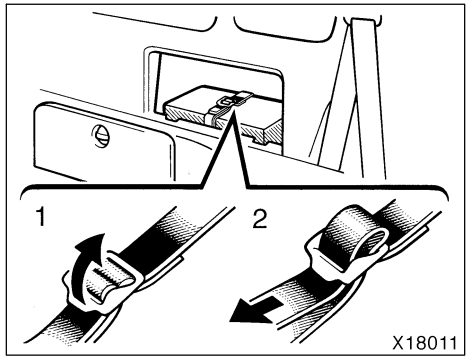

You can hold the objects in the box with the holding belt.

1. To loosen: Pull the buckle forward.
2. To tighten: Pull on the belt.

Make sure the objects are securely held.

Floor mat

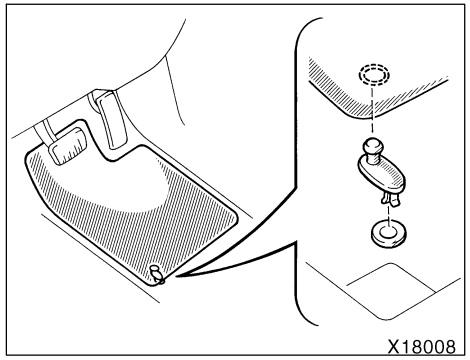

Use a floor mat of the correct size.

If the floor carpet and floor mat have a hole, then it is designed for use with a locking clip. Fix the floor mat with locking clip into the hole in the floor carpet.

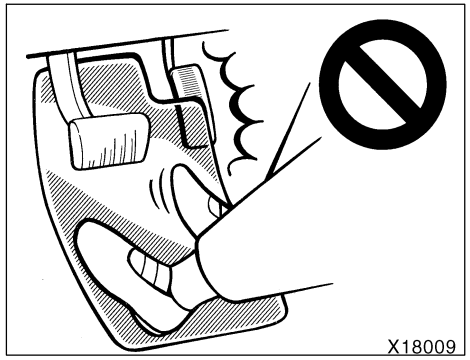

⚠ CAUTION

Make sure the floor mat is properly placed on the floor carpet. If the floor mat slips and interferes with the movement of the pedals during driving, it may cause an accident.

SECTION 2

INFORMATION BEFORE DRIVING YOUR TOYOTA

Off-road vehicle precautions 138
Break-in period 139
Fuel 139
Operation in foreign countries 141
Three-way catalytic converter 141
Engine exhaust cautions 143
Facts about engine oil consumption 143
Twin ground electrode platinum-tipped spark plugs 144
Brake system 145
Brake pad wear limit indicators 148
Luggage stowage precautions 148
Limited-slip differential 149
Your Toyota's identification 149
Theft prevention labels 150
Suspension and chassis 151
Types of tires 151

Off-road vehicle precautions

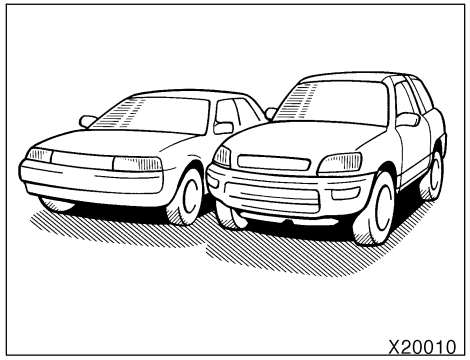

This vehicle belongs to the utility vehicle class, which has higher ground clearance and narrower tread in relation to the height of its center of gravity to make it capable of performing in a wide variety of off-road applications. Specific design characteristics give it a higher center of gravity than ordinary passenger cars. This vehicle design feature causes this type of vehicle to be more likely to rollover. And, utility vehicles have a significantly higher rollover rate than other types of vehicles. An advantage of the higher ground clearance is a better view of the road allowing you to anticipate problems. It is not designed for cornering at the same speeds as ordinary passenger cars any more than low-slung sports cars designed to perform satisfactorily under off-road conditions. Therefore, sharp turns at excessive speeds may cause rollover.

⚠ CAUTION

Always observe the following precautions to minimize the risk of serious personal injury or damage to your vehicle:

- In a rollover crash, an unbelted person is significantly more likely to die than a person wearing a seat belt. Therefore, the driver and all passengers should fasten their seat belts whenever the vehicle is moving.
- Avoid sharp turns or abrupt maneuvers, if at all possible. Failure to operate this vehicle correctly may result in loss of control or vehicle rollover causing death or serious injury.
- Avoid loading any items on the roof that will raise the vehicle's center of gravity.
- Always slow down in gusty crosswinds. Because of its profile and higher center of gravity, your vehicle is more sensitive to side winds than an ordinary passenger car. Slowing down will allow you to have better control.

- When driving off-road or in rugged terrain, do not drive at excessive speeds, jump, make sharp turns, strike objects, etc. This may cause loss of control or vehicle rollover causing death or serious injury. You are also risking expensive damage to your vehicle's suspension and chassis.
- Do not drive horizontally across steep slopes. Driving straight up or straight down is preferred. Your vehicle (or any similar off-road vehicle) can tip over sideways much more easily than forward or backward.

Break-in period

Drive gently and avoid high speeds.

Your vehicle does not need an elaborate break-in. But following a few simple tips for the first 1600 km (1000 miles) can add to the future economy and long life of your vehicle:

- Do not drive over 88 km/h (55 mph).
- Run the engine at moderate speed between 2000 and 4000 rpm.
- Avoid full-throttle starts.
- Try to avoid hard stops during the first 300 km (200 miles).
- Do not drive slowly with the manual transmission in a high gear.
- Do not drive for a long time at any single speed, either fast or slow.
- Do not tow a trailer during the first 800 km (500 miles).

Fuel

FUEL TYPE

Your new vehicle must use only unleaded gasoline.

To help prevent gas station mixups, your Toyota has a new smaller fuel tank opening. The special nozzle on pumps with unleaded fuel will fit it, but the larger standard nozzle on pumps with leaded gas will not.

At a minimum, the gasoline you use should meet the specifications of ASTM D4814 in the U.S.A. and CGSB 3.5-M93 in Canada.

NOTICE

Do not use leaded gasoline. Use of leaded gasoline will cause the three-way catalytic converter to lose its effectiveness and the emission control system to function improperly. Also, this can increase maintenance costs.

OCTANE RATING

Select Octane Rating 87 (Research Octane Number 91) or higher.

Use of unleaded gasoline with an octane rating or research octane number lower than stated above will cause persistent heavy knocking. If it is severe, this will lead to engine damage.

If your engine knocks...

If you detect heavy knocking even when using the recommended fuel, or if you hear steady knocking while holding a steady speed on level roads, consult your Toyota dealer.

However, now and then, you may notice light knocking for a short time while accelerating or driving up hills. This is no need of concern.

GASOLINES CONTAINING DETERGENT ADDITIVES

Toyota recommends use of gasolines that contain detergent additives to avoid build-up of engine deposits.

For further details, ask your Toyota dealer or a local gasoline retailer.

IMPROVED GASOLINES

The American Automobile Manufacturers Association (AAMA) has developed a specification of improved gasolines. The AAMA specification offers optimal fuel information for better vehicle performance and better protection of your engine.

Toyota recommends the use of gasolines that meet the AAMA specification, if available, for improved driveability and emission control system.

GASOLINES CONTAINING MTBE

Gasolines that contain MTBE (Methyl Tertiary-Butyl Ether) are available in the market. If you use a gasoline mixed with MTBE, make certain that it does not contain more than 15% of MTBE.

GASOLINES CONTAINING MMT

Some gasolines contain an octane-enhancing additive called MMT (methylcyclopentadienyl manganese tricarbonyl).

Toyota does not recommend the use of gasolines that contain MMT. If fuels containing MMT are used, your emission control system may be adversely affected. The Malfunction Indicator Lamp on the instrument cluster may come on. If this happens, contact your Toyota dealer for service.

GASOLINES CONTAINING ALCOHOL

If you use gasohol in your Toyota, be sure that it is unleaded, has an octane rating no lower than 87 and does not contain more than 10% ethanol.

Gasohol is a mixture of gasoline and ethanol.

Toyota does not recommend the use of gasolines containing methanol. If you use gasoline containing methanol, use only gasoline meeting the requirements above and also containing less than 5% methanol with cosolvents and corrosion inhibitors for methanol.

GASOLINES QUALITY

In a very few cases, you may experience driveability problems caused by the particular gasoline that you are using. If you continue to have unacceptable driveability, try changing gasoline brands. If that does not rectify your problem, then consult your Toyota dealer.

NOTICE

- Do not use gasohol other than stated above. It will cause fuel system damage or vehicle performance problems.
- If driveability problems occur (poor hot starting, vaporizing, engine knock, etc.), discontinue the use.
- Take care not to spill gasohol during refueling. Gasohol may cause paint damage.

FUEL TANK CAPACITY

58 L (15.3 gal., 12.8 Imp. gal.)

Operation in foreign countries

If you plan to drive your Toyota in another country...

First, comply with the vehicle registration laws.

Second, confirm the availability of the correct fuel (unleaded and minimum octane number).

Three-way catalytic converter

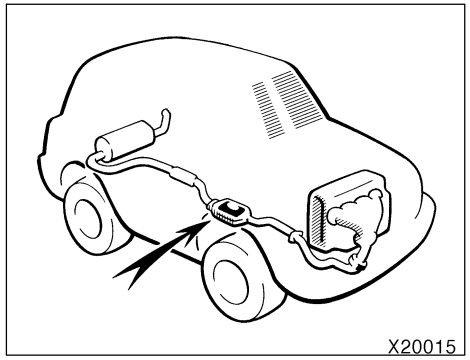

Type A

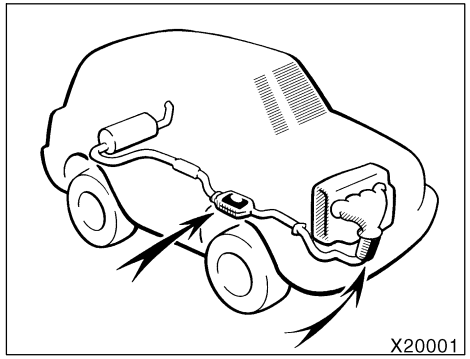

Type B

The three-way catalytic converter is an emission control device installed in the exhaust system.

The purpose is to reduce pollutants in the exhaust gas.

⚠ CAUTION

- Keep people and combustible materials away from the exhaust pipe while the engine is running. The exhaust gas is very hot.
- Do not idle or park your vehicle over anything that might burn easily such as grass, leaves, paper or rags.

NOTICE

A large amount of unburned gases flowing into the three-way catalytic converter may cause it to overheat and create a fire hazard. To prevent this and other damage, observe the following precautions:

- Use only unleaded gasoline.
- Do not drive with an extremely low fuel level; running out of fuel could cause the engine to misfire, creating an excessive load on the three-way catalytic converter.
- Do not allow the engine to run at idle speed for more than 20 minutes.
- Avoid racing the engine.
- Do not push-start or pull-start your vehicle.
- Do not turn off the ignition while the vehicle is moving.
- Keep your engine in good running order. Malfunctions in the engine electrical system, electronic ignition system/distributor ignition system or fuel systems could cause an extremely high three-way catalytic converter temperature.
- If the engine becomes difficult to start or stalls frequently, take your vehicle in for a check-up as soon as possible. Remember, your Toyota dealer knows your vehicle and its three-way catalytic converter system best.
- To ensure that the three-way catalytic converter and the entire emission control system operate properly, your vehicle must receive the periodic inspections required by the Toyota Maintenance Schedule. For scheduled maintenance information, refer to the "Scheduled Maintenance Guide" or "Owner's Manual Supplement".

Engine exhaust cautions

⚠ CAUTION

- Avoid inhaling the engine exhaust. It contains carbon monoxide, which is a colorless and odorless gas. It can cause unconsciousness or even death.
- Make sure the exhaust system has no holes or loose connections. The system should be checked from time to time. If you hit something, or notice a change in the sound of the exhaust, have the system checked immediately.
- Do not run the engine in a garage or enclosed area except for the time needed to drive the vehicle in or out. The exhaust gases cannot escape, making this a particularly dangerous situation.
- Do not remain for a long time in a parked vehicle with the engine running. If it is unavoidable, however, do so only in an unconfined area and adjust the heating or cooling system to force outside air into the vehicle.
- To allow proper operation of your vehicle's ventilation system, keep the inlet grilles in front of the windshield clear of snow, leaves, or other obstructions.
- Hardtop: Keep the back door closed while driving. An open or unsealed back door may cause exhaust gases to be drawn into the vehicle.

  If you smell exhaust fumes in the vehicle, drive with the windows open and the back door closed. Have the cause immediately located and corrected.
- Soft-top: When you drive with the soft-top closed, keep the tail gate and rear window securely closed. An open or unsealed tail gate and rear window, may cause exhaust gases to be drawn into the vehicle.

  If you smell exhaust fumes in the vehicle, drive with the windows open and the tailgate and rear window closed. Have the cause immediately located and corrected.

Facts about engine oil consumption

FUNCTIONS OF ENGINE OIL

Engine oil has the primary functions of lubricating and cooling the inside of the engine, and plays a major role in maintaining the engine in proper working order.

ENGINE OIL CONSUMPTION

It is normal that an engine should consume some engine oil during normal engine operation. The causes of oil consumption in a normal engine are as follows.

- Oil is used to lubricate pistons, piston rings and cylinders. A thin film of oil is left on the cylinder wall when a piston moves downwards in the cylinder. High negative pressure generated when the vehicle is decelerating sucks some of this oil into the combustion chamber. This oil as well as some part of the oil film left on the cylinder wall is burned by the high temperature combustion gases during the combustion process.

- Oil is also used to lubricate the stems of the intake valves. Some of this oil is sucked into the combustion chamber together with the intake air and is burned along with the fuel. High temperature exhaust gases also burn the oil used to lubricate the exhaust valve stems.

The amount of engine oil consumed depends on the viscosity of the oil, the quality of the oil and the conditions the vehicle is driven under.

More oil is consumed by high-speed driving and frequent acceleration and deceleration.

A new engine consumes more oil, since its pistons, piston rings and cylinder walls have not become conditioned.

When judging the amount of oil consumption, note that the oil may become diluted and make it difficult to judge the true level accurately.

As an example, if a vehicle is used for repeated short trips, and consumes a normal amount of oil, the dipstick may not show any drop in the oil level at all, even after 1000 km (600 miles) or more. This is because the oil is gradually becoming diluted with fuel or moisture, making it appear that the oil level has not changed. The diluting ingredients evaporate out when the vehicle is then driven at high speeds, as on an expressway, making it appear that oil is excessively consumed after driving at high speeds.

IMPORTANCE OF ENGINE OIL LEVEL CHECK

One of the most important points in proper vehicle maintenance is to keep the engine oil at the optimum level so that oil function will not be impaired. Therefore, it is essential that the oil level be checked regularly. Toyota recommends that the oil level be checked every time you refuel the vehicle.

NOTICE

Failure to check the oil level regularly could lead to serious engine trouble due to insufficient oil.

For detailed information on oil level check, see "Checking the engine oil level" in Section 7-2.

Twin ground electrode platinum-tipped spark plugs

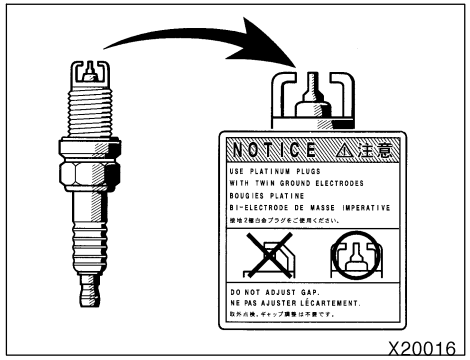

Your engine is fitted with twin ground electrode platinum-tipped spark plugs.

NOTICE

Use only twin ground electrode platinum-tipped spark plugs and do not adjust gaps for your engine performance.

Brake system

The tandem master cylinder brake system is a hydraulic system with two separate sub-systems. If either sub-system should fail, the other will still work. However, the pedal will be harder to press, and your stopping distance will be longer. Also, the brake system warning light may come on.

⚠ CAUTION

Do not drive your vehicle with only a single brake system. Have your brakes fixed immediately.

BRAKE BOOSTER

The brake booster uses engine vacuum to power-assist the brakes. If the engine should quit while you are driving, you can bring the vehicle to a stop with normal pedal pressure. There is enough reserved vacuum for one or two stops—but no more!

⚠ CAUTION

- Do not pump the brake pedal if the engine stalls. Each push on the pedal uses up your reserved vacuum.
- Even if the power assist is completely lost, the brakes will still work. But you will have to push the pedal hard, much harder than normal. And your braking distance will be longer.

ANTI-LOCK BRAKE SYSTEM (with "ABS" warning light)

The anti-lock brake system is designed to help prevent lock-up of the wheels during a sudden braking or braking on slippery road surfaces. This assists in providing stability and steering performance of the vehicle under these circumstances.

Effective way to press the ABS brake pedal:
When the anti-lock brake system function is in action, just hold the brake pedal down more firmly. Especially, in a panic stop, you need to keep it depressed more firmly, and do not pump the brake. Pumping the brake pedal makes the stopping distance longer.

The anti-lock brake system becomes operative after the vehicle has accelerated to a speed in excess of approximately 10 km/h (6 mph). It stops operating when the vehicle decelerates to a speed below approximately 5 km/h (3 mph).

Depressing the brake pedal on slippery road surfaces such as on the manhole cover, the steel plate under the construction, joints in the bridge, etc. on a rainy day tends to activate the anti-lock brake system.

You may hear a click or motor sound in the engine compartment for a few seconds when the engine is started or just after the vehicle is started. This means that the anti-lock brake system is in the self-check mode, and does not indicate a malfunction.

When the anti-lock brake system is activated, the following conditions may occur, however, do not indicate a malfunction of the system:

- You may hear the anti-lock brake system operating and feel the brake pedal pulsating and the vibrations of the vehicle body and steering wheel. You may also hear the motor sound in the engine compartment even after the vehicle is stopped.
- At the end of the anti-lock brake system activation, the brake pedal may move a little to the forward.

⚠ CAUTION

Do not overestimate the anti-lock brake system: Although the anti-lock brake system assists in providing vehicle control, it is still important to drive with all due care and maintain a moderate speed and safe distance from the vehicle in front of you, because there are limits to the vehicle stability and effectiveness of steering wheel operation even with the anti-lock brake system on.

If tires grip performance exceeds its capability, or if hydroplaning occurs during high speed driving in the rain, the anti-lock brake system does not provide vehicle control.

Anti-lock brake system is not designed to shorten the stopping distance: Always drive at the moderate speed and maintain a safe distance from the vehicle in front of you. Compared with vehicles not fitted with an anti-lock brake system, your vehicle may require a longer stopping distance in the following cases:

- Driving on rough, gravel or snow-covered roads.
- Driving with tire chains installed.
- Driving over the steps such as the joints on the road.
- Driving on roads where the road surface is pitted or has other differences in surface height.

Install all 4 tires of specified size at designated pressure: The anti-lock brake system detects vehicle speeds using the speed sensors for respective wheels' turning speeds. The use of tires other than specified may fail to detect the accurate turning speed, resulting in a longer stopping distance.

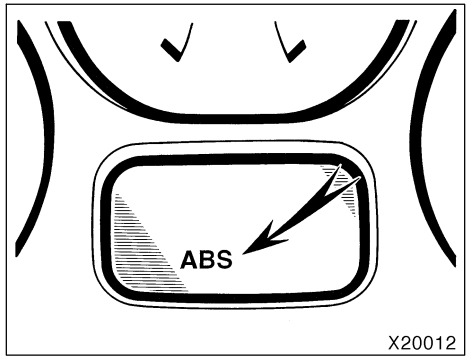

Type A

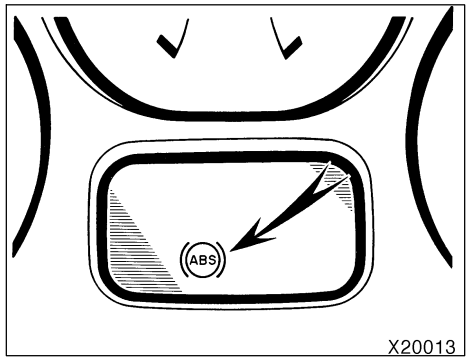

Type B

”ABS” warning light

The light comes on when the ignition key is turned to the “ON” position. If the anti-lock brake system works properly, the light goes out after a few seconds. Thereafter, if the system malfunctions, the light comes on.

When the “ABS” warning light is on (and the brake system warning light is off), the anti-lock brake system does not operate, but the brake system still operates conventionally.

When the “ABS” warning light is on (and the brake system warning light is off), the anti-lock brake system does not operate so that the wheels could lock up during a sudden braking or braking on slippery road surfaces.

If the following conditions occur, this indicates a malfunction somewhere in the parts monitored by the warning light system. Contact your Toyota dealer as soon as possible to service the vehicle.

- The light does not come on with the ignition key turned to “ON”, or remains on.
- The light comes on while driving.

If the light lit during driving goes out and does not come on again, it is a normal operation.

Brake pad wear limit indicators

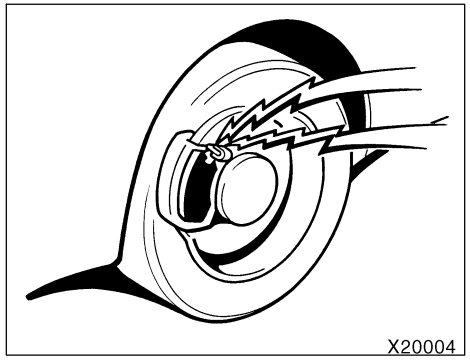

The brake pad wear limit indicators on your disc brakes give a warning noise when the brake pads are worn to where replacement is required.

If you hear a squealing or scraping noise while driving, have the brake pads checked and replaced by your Toyota dealer as soon as possible. Expensive rotor damage can result if the pads are not replaced when necessary.

Luggage stowage precautions

When stowing luggage or cargo in the vehicle, observe the following:

- Put luggage or cargo in the luggage compartment when at all possible. Be sure all items are secured in place.
- Be careful to keep the vehicle balanced. Locating the weight as far forward as possible helps maintain balance.
- For better fuel economy, do not carry unneeded weight.

⚠ CAUTION

- To prevent luggage or packages from sliding forward during braking, do not stack anything in the luggage compartment higher than the seatbacks. Keep luggage or packages low, as close to the floor as possible.
- Never allow anyone to ride in the luggage compartment. It is not designed for passengers. They should ride in their seats with their seat belts properly fastened. Otherwise, they are much more likely suffer serious bodily injury, in the event of sudden braking or a collision.
- Do not place anything on the flattened seat, or it may slide forward during braking.
- Do not drive with objects left on top of the instrument panel. They may interfere with the driver's field of view. Or they may move during sharp vehicle acceleration or turning, and impair the driver's control of the vehicle. In an accident they may injure the vehicle occupants.

NOTICE

Do not load the vehicle beyond the vehicle capacity weight specified in Section 8.

Limited-slip differential (four-wheel drive models only)

Some Toyotas are equipped with a limited-slip differential. If one rear wheel begins to spin, the limited-slip differential is designed to aid traction by automatically transmitting driving force to the other rear wheel. If you are not sure whether your vehicle is equipped with one, you can ask your Toyota dealer.

⚠ CAUTION

Do not start or run the engine while your vehicle is supported by a jack. The vehicle could be driven off the jack and could pose a danger or result in serious injury.

NOTICE

Use only a spare tire of the same size, construction and load capacity as the original tires on your Toyota because damage to the limited-slip differential could possibly occur with another tire type.

Your Toyota's identification——Vehicle identification number

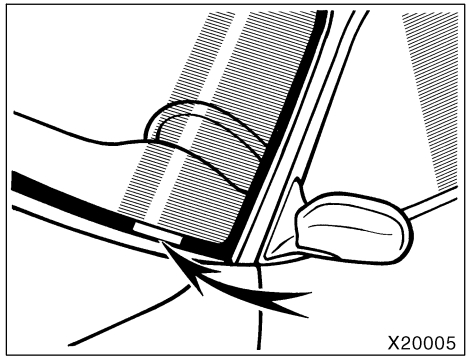

The vehicle identification number (VIN) is the legal identifier for your vehicle. This number is on the left top of the instrument panel, and can be seen through the windshield from outside.

This is the primary identification number for your Toyota. It is used in registering the ownership of your vehicle.

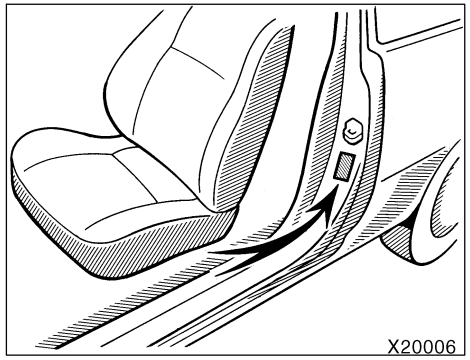

2-door hardtop and soft-top

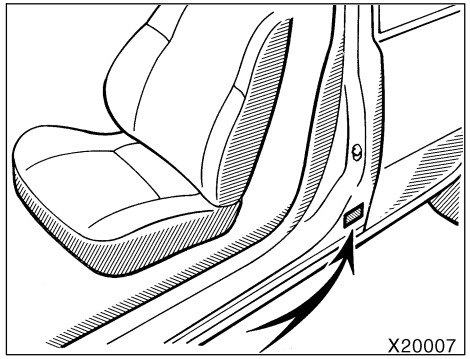

4-door hardtop

The vehicle identification number (VIN) is also on the Certification Label.

—Engine number

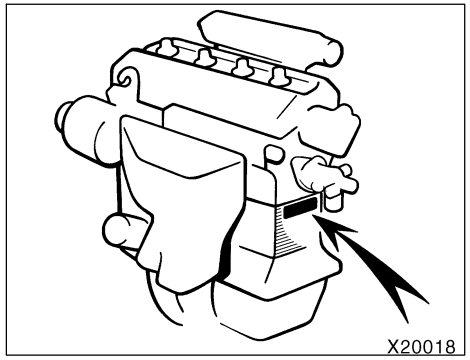

The engine number is stamped on the engine block as shown.

Theft prevention labels (except for Canada)

Your new vehicle carries theft prevention labels which are approximately 56 mm (2.20 in.) by 16 mm (0.63 in.).

The purpose of these labels is to reduce the incidence of vehicle thefts by facilitating the tracing and recovery of parts from stolen vehicles. The label is designed so that once it is applied to a surface, any attempt to remove it will result in destroying the integrity of the label. Transferring these labels intact from one part to another, will be impossible.

NOTICE

You should not attempt to remove the theft prevention labels as it may violate certain state or federal laws.

Suspension and chassis

CAUTION

Do not modify the suspension/chassis with lift kits, spacers, springs, etc. It can cause dangerous handling characteristics, resulting in loss of control.

Types of tires

Determine what kind of tires your vehicle is originally equipped with.

1. Summer tires

Summer tires are high-speed capability tires best suited to highway driving under dry conditions.

Since summer tires do not have the same traction performance as snow tires, summer tires are inadequate for driving on snow-covered or icy roads. For driving on snow-covered or icy roads, we recommend using snow tires. If installing snow tires, be sure to replace all four tires.

2. All season tires

All season tires are designed to provide better traction in snow and to be adequate for driving in most winter conditions, as well as for use all year round.

All season tires, however, do not have adequate traction performance compared with snow tires in heavy or loose snow. Also, all season tires fall short in acceleration and handling performance compared with summer tires in highway driving.

CAUTION

- Do not mix summer and all season tires on your vehicle as this can cause dangerous handling characteristics, resulting in loss of control.
- Do not use tire other than the manufacturer's designated tires, and never mix tires or wheels of the sizes different from the originals.

SECTION 3

STARTING AND DRIVING

Before starting the engine 154
How to start the engine 154
Tips for driving in various conditions 155
Off-road driving precautions 156
Winter driving tips 157
Trailer towing 158
How to save fuel and make your vehicle last longer, too 164

Before starting the engine

1. Check the area around the vehicle before entering it.
2. Adjust seat position, seatback angle, head restraint height and steering wheel angle.
3. Adjust the inside and outside rear view mirrors.
4. Lock side doors, back door (hardtop) and tailgate (soft-top).
5. Fasten seat belts.

How to start the engine— (a) Before cranking

1. Apply the parking brake firmly.
2. Turn off unnecessary lights and accessories.
3. Manual transmission: Press the clutch pedal to the floor and shift the transmission into neutral. Hold the clutch pedal to the floor until the engine is started. A starter safety device will prevent the starter from operating if the clutch pedal is not fully depressed.

   Automatic transmission: Put the selector lever in ”P”. If you need to restart the engine while the vehicle is moving, put the selector lever in ”N”. A starter safety device will prevent the starter from operating if the selector lever is in any drive position.
4. Automatic transmission only: Depress the brake pedal and hold it to the floor until driving off.

(b) Starting the engine

Before starting the engine, be sure to follow the instructions in ”(a) Before cranking”.

Normal starting procedure

The multiport fuel injection system/sequential multiport fuel injection system in your engine automatically controls the proper air-fuel mixture for starting. You can start a cold or hot engine as follows:

1. With your foot off the accelerator pedal, crank the engine by turning the key to ”START”. Release it when the engine starts.
2. After the engine runs for about 10 seconds, you are ready to drive.

If the weather is below freezing, let the engine warm up for a few minutes before driving.

If the engine stalls...

Simply restart it, using the correct procedure given in normal starting.

If the engine will not start...

See ”If your vehicle will not start” in Section 4.

NOTICE

- Do not crank for more than 30 seconds at a time. This may overheat the starter and wiring systems.
- Do not race a cold engine.
- If the engine becomes difficult to start or stalls frequently, have the engine checked immediately.

Tips for driving in various conditions

- Always slow down in gusty crosswinds. This will allow you much better control.
- Drive slowly onto curbs and, if possible, at a right angle. Avoid driving onto high, sharp-edged objects and other road hazards. Failure to do so can lead to severe tire damage resulting in tire bursts.
- When parking on a hill, turn the front wheels until they touch the curb so that the vehicle will not roll. Apply the parking brake, and place the transmission in "P" (automatic) or in first or reverse (manual). If necessary, block the wheels.
- Washing your vehicle or driving through deep water may get the brakes wet. To see whether they are wet, check that there is no traffic near you, and then press the pedal lightly. If you do not feel a normal braking force, the brakes are probably wet. To dry them, drive the vehicle cautiously while lightly pressing the brake pedal with the parking brake applied. If they still do not work safely, pull to the side of the road and call a Toyota dealer for assistance.

⚠ CAUTION

- Before driving off, make sure that the parking brake is fully released and the parking brake reminder light is off.
- Do not leave your vehicle unattended while the engine is running.
- Do not rest your foot on the brake pedal while driving. It can cause dangerous overheating, needless wear, and poor fuel economy.
- To drive down a long or steep hill, reduce your speed and downshift. Remember, if you ride the brakes excessively, they may overheat and not work properly.
- Be careful when accelerating, upshifting, downshifting or braking on a slippery surface. Sudden acceleration or engine braking, could cause the vehicle to spin or skid.

- Do not drive in excess of the speed limit. Even if the legal speed limit permits it, do not drive over 140 km/h (85 mph) unless your vehicle has high-speed capability tires. Driving over 140 km/h (85 mph) may result in tire failure, loss of control and possible injury. Be sure to consult a tire dealer to determine whether the tires on your vehicle are high-speed capability tires or not before driving at such speeds.
- Do not continue normal driving when the brakes are wet. If they are wet, your vehicle will require a longer stopping distance, and it may pull to one side when the brakes are applied. Also, the parking brake will not hold the vehicle securely.

Off-road driving precautions

When driving your vehicle off-road, please observe the following precautions to ensure your driving enjoyment and to help prevent the closure of areas to off-road vehicles.

a. Drive your vehicle only in areas where off-road vehicles are permitted to travel.

b. Respect private property. Get owner's permission before entering private property.

c. Do not enter areas that are closed. Honor gates, barriers and signs that restrict travel.

d. Stay on established roads. When conditions are wet, driving techniques should be changed or travel delayed to prevent damage to roads.

For owners in U.S. mainland, Hawaii and Puerto Rico:

To obtain additional information pertaining to driving your vehicle off-road, consult the following organizations.

- State and Local Parks and Recreation Departments
- State Motor Vehicle Bureau
- Recreational Vehicle Clubs
- U.S. Forest Service and Bureau of Land Management

⚠ CAUTION

Always observe the following precautions to minimize the risk of serious personal injury or damage to your vehicle:

- Drive carefully when off the road. Do not take unnecessary risks by driving in dangerous places.
- Do not grip the steering wheel spokes when driving off-road. A bad bump could jerk the wheel and injure your hands. Keep both hands and especially your thumbs on the outside of the rim.
- Always check your brakes for effectiveness immediately after driving in sand, mud, water or snow.
- After driving through tall grass, mud, rock, sand, rivers, etc., check that there is no grass, bush, paper, rags, stone, sand, etc. adhering or trapped on the underbody. Clear off any such matter from the underbody. If the vehicle is used with these materials trapped or adhering to the underbody, a breakdown or fire could occur.

- In a rollover crash, an unbelted person is significantly more likely to die than a person wearing a seat belt. Therefore, the driver and all passengers should fasten their seat belts whenever the vehicle is moving.
- When driving off-road or in rugged terrain, do not drive at excessive speeds, jump, make sharp turns, strike objects, etc. This may cause loss of control or vehicle rollover causing death or serious injury. You are also risking expensive damage to your vehicle's suspension and chassis.

NOTICE

◆If driving through water, such as when crossing shallow streams, first check the depth of the water and the bottom of the river bed for firmness. Drive slowly and avoid deep water.

◆Take all necessary safety measures to ensure that water damage to the engine or other components does not occur.

Water entering the engine air intake will cause severe engine damage.

Water can wash the grease from wheel bearings, causing rusting and premature failure, and may also enter the differentials, transmission and transfer case, reducing the gear oil's lubricating qualities.

◆Sand and mud that has accumulated in brake drums and around brake discs may affect braking efficiency and may damage brake system components.

◆Always perform a maintenance inspection after each day of off-road driving that has taken you through rough terrain, sand, mud, or water. For scheduled maintenance information, refer to the "Scheduled Maintenance Guide" or "Owner's Manual Supplement".

Winter driving tips

Make sure you have a proper freeze protection of engine coolant.

Your coolant must contain ethylene-glycol type coolant for a proper corrosion protection of aluminum components. Use "TOYOTA Long Life Coolant" or equivalent.

See Section 7-2 for details about coolant type selection.

NOTICE

Do not use alcohol type antifreeze or plain water alone.

When it is extremely cold, we recommend to use 60% solution for your Toyota, to provide protection down to about -50°C (-58°F). Do not use more than 70% solution for better coolant performance.

Check the condition of the battery and cables.

Cold temperatures reduce the capacity of any battery, so it must be in top shape to provide enough power for winter starting. Section 7-3 tells you how to visually inspect the battery. Your Toyota dealer and most service stations will be pleased to check the level of charge.

Make sure the engine oil viscosity is suitable for the cold weather.

See Section 7-2 for recommended viscosity. Leaving a heavy summer oil in your vehicle during winter months may cause harder starting. If you are not sure about which oil to use, call your Toyota dealer–he will be pleased to help.

Keep the door locks from freezing.

Squirt lock de-icer or glycerine into the locks to keep them from freezing. To open a frozen lock, try heating the key before inserting it.

Use a washer fluid containing an anti-freeze solution.

This product is available at your Toyota dealer and most auto parts stores. Follow the manufacturer's directions for how much to mix with water.

NOTICE
Do not use engine antifreeze or any other substitute because it may damage your vehicle's paint.

Do not use your parking brake when there is a possibility it could freeze.

When parking, put the transmission into "P" (automatic) or into first or reverse (manual) and block the rear wheels. Do not use the parking brake, or snow or water accumulated in and around the parking brake mechanism may freeze, making it hard to release.

Keep ice and snow from accumulating under the fenders.

Ice and snow built up under your fenders can make steering difficult. During bad winter driving, stop and check under the fenders occasionally.

Depending on where you are driving, we recommend you carry some emergency equipment.

Some of the things you might put in the vehicle are tire chains, window scraper, bag of sand or salt, flares, small shovel, jumper cables, etc.

Trailer towing

Your vehicle is designed primarily as a passenger-carrying vehicle. Towing a trailer will have an adverse effect on handling, performance, braking, durability and driving economy (fuel consumption, etc.). Your safety and satisfaction depend on the proper use of correct equipment and cautious driving habits. For your safety and the safety of others, you must not overload your vehicle or trailer. Toyota warranties do not apply to damage or malfunction caused by towing a trailer for commercial purposes. Ask your local Toyota dealer for further details before towing.

WEIGHT LIMITS

Before towing, make sure the total trailer weight, gross combination weight, gross vehicle weight, gross axle weight and trailer tongue load are all within the limits.

The total trailer weight and tongue load can be measured with platform scales found at a highway weighing station, building supply company, trucking company, junk yard, etc.

⚠ CAUTION

- The total trailer weight (trailer weight plus its cargo load) must not exceed 680 kg (1500 lb.).
- The gross combination weight (sum of your vehicle weight plus its load and the total trailer weight) must not exceed the following.

  2-door hardtop and soft-top
  - Two-wheel drive models
    2290 kg (5049 lb.)
  - Four-wheel drive models
    2335 kg (5148 lb.)

  4-door hardtop
  - Two-wheel drive models
    2455 kg (5412 lb.)
  - Four-wheel drive models
    2470 kg (5445 lb.)

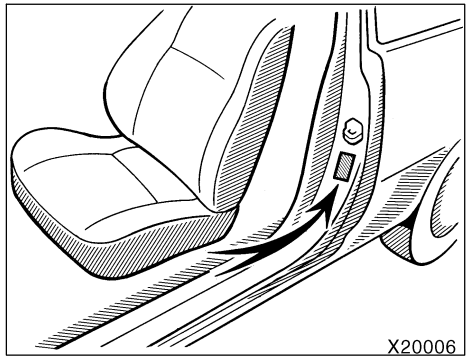

2-door hardtop and soft-top

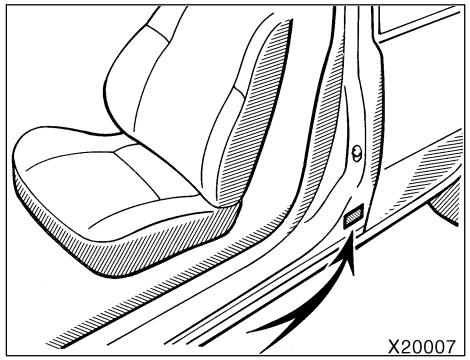

4-door hardtop

- Trailer hitch assemblies have different weight capacities established by the hitch manufacturer. Even though the vehicle may be physically capable of towing a higher weight, the operator must determine the maximum weight rating of the particular hitch assembly and never exceed the maximum weight rating specified for the trailer-hitch. Exceeding the maximum weight rating set by the trailer hitch manufacturer can cause an accident resulting in serious personal injuries.
- The gross vehicle weight must not exceed the Gross Vehicle Weight Rating (GVWR) indicated on the Certification Label. The gross vehicle weight is the sum of weights of the unloaded vehicle, driver, passengers, luggage, hitch and trailer tongue load. It also includes the weight of any special equipment installed on your vehicle.

- The load on either the front or rear axle resulting from distribution of the gross vehicle weight on both axles must not exceed the Gross Axle Weight Rating (GAWR) listed on the Certification Label.

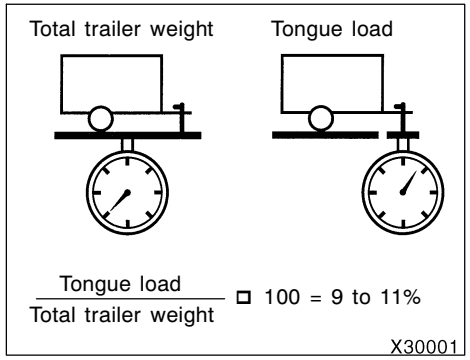

- The trailer cargo load should be distributed so that the tongue load is 9 to 11% of the total trailer weight, not exceeding 68 kg (150 lb.).

  Never load the trailer with more weight in the back than in the front. About 60% of the trailer load should be in the front half of the trailer and the remaining 40% in the rear.

HITCHES

- Use only a weight carrying hitch designed for the total trailer weight. Toyota does not recommend using a weight distribution (load equalizing) hitch.
- The hitch must be bolted securely to the vehicle frame and installed according to the hitch manufacturer's instructions.
- The hitch ball should have a light coat of grease.
- Toyota recommends that the trailer hitch be removed when not towing to prevent injury and/or damage by the hitch in event of a rear end collision. After removing the hitch, the installation area should be sealed to prevent entry of exhaust fumes and mud.

NOTICE

Do not use an axle-mounting hitch as it may cause damage to the axle housing, wheel bearings, wheels and/or tires.

BRAKES AND SAFETY CHAINS

- Toyota recommends trailers with brakes that conform to any applicable federal and state/provincial regulations.
- A safety chain must always be used between the towing vehicle and the trailer. Leave sufficient slack in the chain for turns. The chain should cross under the trailer tongue to prevent the tongue from dropping to the ground in case it becomes damaged or separated. For correct safety chain procedures, follow the hitch or trailer manufacturer's recommendations.

⚠ CAUTION

- If the total trailer weight exceeds 272 kg (600 lb.), trailer brakes are required.
- Never tap into your vehicle's hydraulic system as it would lower its braking effectiveness.

- Never tow a trailer without using a safety chain securely attached to both the trailer and the vehicle. If damage occurs to the coupling unit or hitch ball, there is danger of the trailer wandering over into another lane.

TIRES

- Ensure that your vehicle's tires are properly inflated. See Section 7-2 for instructions.
- The trailer tires should be inflated to the pressure recommended by the trailer manufacturer in respect to the total trailer weight.

TRAILER LIGHTS

- Trailer lights must comply with federal, state/provincial and local regulations. See your local recreational vehicle dealer or rental agency for the correct type of wiring and relays for your trailer. Check for correct operation of the turn signals and stop lights each time you hitch up. Direct splicing may damage your vehicle's electrical system and cause a malfunction of your lights.

BREAK-IN SCHEDULE

- Toyota recommends that you do not tow a trailer with a new vehicle or a vehicle with any new power train component (engine, transmission, differential, wheel bearing, etc.) for the first 800 km (500 miles) of driving.

MAINTENANCE

- If you tow a trailer, your vehicle will require more frequent maintenance due to the additional load. For this information, please refer to the scheduled maintenance information in the "Scheduled Maintenance Guide" or "Owner's Manual Supplement".
- Retighten all fixing bolts of the towing ball and bracket after approximately 1000 km (600 miles) of trailer driving.

PRE-TOWING SAFETY CHECK

- Check that your vehicle remains level when a loaded or unloaded trailer is hitched. Do not drive if the vehicle has an abnormal nose-up or nose-down condition, and check for improper tongue load, overload, worn suspension or other possible causes.
- Make sure the trailer cargo is securely loaded so that it cannot shift.

- Check that your rear view mirrors conform to any applicable federal, state/provincial or local regulation. If not, install the rear view mirrors required for towing purpose.

TRAILER TOWING TIPS

When towing a trailer, your vehicle will handle differently than when not towing. The three main causes of vehicle-trailer accidents are driver error, excessive speed and improper trailer loading. Keep these in mind when towing:

- Before starting out, check operation of the lights and all vehicle-trailer connections. After driving a short distance, stop and recheck the lights and connections. Before actually towing a trailer, practice turning, stopping and backing with a trailer in an area away from traffic until you learn the feel.
- Because stopping distance may be increased, vehicle-to-vehicle distance should be increased when towing a trailer. For each 16 km/h (10 mph) of speed, allow at least one vehicle and trailer length between you and the vehicle ahead. Avoid sudden braking as you may skid, resulting in jackknifing and loss of control. This is especially true on wet or slippery surfaces.
- Avoid jerky starts or sudden acceleration. If your vehicle has a manual transmission, prevent excessive clutch slippage by keeping engine rpm low and not racing the engine. Always start out in first gear.
- Avoid jerky steering and sharp turns. The trailer could hit your vehicle in a tight turn. Slow down before making a turn to avoid the necessity of sudden braking.
- Backing with a trailer is difficult and requires practice. Grip the bottom of the steering wheel and move your hand to the left to move the trailer to the left. Move your hand to the right to move the trailer to the right. (This procedure is generally opposite to that when backing without a trailer). Also, just turn the steering wheel a little at a time, avoiding sharp or prolonged turning. Have someone guide you when backing to reduce the risk of an accident.
- Remember that when making a turn, the trailer wheels will be closer than the vehicle wheels to the inside of the turn. Therefore, compensate for this by making a larger than normal turning radius with your vehicle.
- Crosswinds and rough roads will adversely affect handling of your vehicle and trailer, causing sway. Pay attention to the rear from time to time to prepare yourself for being passed by large trucks or buses, which may cause your vehicle and trailer to sway. If swaying happens, firmly grip the steering wheel and reduce speed immediately but gradually. Never increase speed. Steer straight ahead. If you make no extreme correction with the steering or brakes, the vehicle and trailer will stabilize.
- Be careful when passing other vehicles. Passing requires considerable distance. After passing a vehicle, do not forget the length of your trailer and be sure you have plenty of room before changing lanes.
- In order to maintain engine braking efficiency, do not use fifth gear (manual transmission) or overdrive (automatic transmission).

- Because of the added load of the trailer, your vehicle's engine may overheat on hot days (at temperatures over 30°C [85°F]) when going up a long or steep grade with a trailer. If the engine coolant temperature gauge indicates overheating, immediately turn off the air conditioning (if in use), pull off the road and stop in a safe spot. Refer to "If your vehicle overheats" in Section 4 of this manual.
- Always place wheel blocks under both the vehicle and trailer wheels when parking. Apply the parking brake firmly. Put the transmission in "P" (automatic) or in first or reverse (manual). Avoid parking on a slope with a trailer, but if it cannot be avoided, do so only after performing the following:

1. Apply the brakes and hold.
2. Have someone place wheel blocks under both the vehicle and trailer wheels.
3. When the wheel blocks are in place, release your brakes slowly until the blocks absorb the load.
4. Apply the parking brake firmly.
5. Shift into first or reverse (manual) or "P" (automatic) and turn off the engine.

When restarting out after parking on a slope:

1. With the transmission in "P" position (automatic) or the clutch pedal depressed (manual), start the engine. (With an automatic transmission, be sure to keep the brake pedal depressed.)
2. Shift into gear.
3. Release the parking brake (also foot brake on automatic transmission vehicles) and slowly pull or back away from the wheel blocks. Stop and apply your brakes.
4. Have someone retrieve the blocks.

⚠ CAUTION

- Do not exceed 72 km/h (45 mph) or the posted towing speed limit, whichever is lower. Because instability (swaying) of a towing vehicle–trailer combination usually increases as the speed increases, exceeding 72 km/h (45 mph) may cause loss of control.

- Slow down and downshift before descending steep or long downhill grades. Do not make sudden downshifts.
- Avoid holding the brake pedal down too long or too frequently. This could cause the brakes to overheat and result in reduced braking efficiency.

How to save fuel and make your vehicle last longer, too

Getting more kilometers/mileage from a liter/gallon of fuel is easy—just take it easy. It will help make your vehicle last longer, too. Here are some specific tips on how to save money on both fuel and repairs:

- Keep your tires inflated at the correct pressure. Underinflation causes tire wear and wastes fuel. See Section 7-2 for instructions.
- Do not carry unneeded weight in your vehicle. Excess weight puts a heavier load on the engine, causing greater fuel consumption.
- Avoid lengthy warm-up idling. Once the engine is running smoothly, begin driving—but gently. Remember, however, that on cold winter days this may take a little longer.
- Always keep the automatic transmission overdrive switch turned on. Driving with the overdrive switch off will reduce the fuel economy. (For details, see “Automatic transmission” in Section 1-6.)
- Accelerate slowly and smoothly. Avoid jackrabbit starts. Get into high gear as quickly as possible.
- Avoid long engine idling. If you have a long wait and you are not in traffic, it is better to turn off the engine and start again later.
- Avoid engine lug or overrevving. Use a gear position suitable for the road on which you are travelling.
- Avoid continuous speeding up and slowing down. Stop-and-go driving wastes fuel.
- Avoid unnecessary stopping and braking. Maintain a steady pace. Try to time the traffic signals so you only need to stop as little as possible or take advantage of through streets to avoid traffic lights. Keep a proper distance from other vehicles to avoid sudden braking. This will also reduce wear on your brakes.
- Avoid heavy traffic or traffic jams whenever possible.
- Do not rest your foot on the clutch or brake pedal. This causes premature wear, overheating and poor fuel economy.
- Maintain a moderate speed on highways. The faster you drive, the greater the fuel consumption. By reducing your speed, you will cut down on fuel consumption.
- Keep the front wheels in proper alignment. Avoid hitting the curb and slow down on rough roads. Improper alignment not only causes faster tire wear but also puts an extra load on the engine, which, in turn, wastes fuel.
- Keep the bottom of your vehicle free from mud, etc. This not only lessens weight but also helps prevent corrosion.
- Keep your vehicle tuned-up and in top shape. A dirty air cleaner, improper valve clearance, dirty plugs, dirty oil and grease,brakes not adjusted, etc. all lower engine performance and contribute to poor fuel economy. For longer life of all parts and lower operating costs, keep all maintenance work on schedule, and if you often drive under severe conditions, see that your vehicle receives more frequent maintenance. (For scheduled maintenance information, please refer to the ”Scheduled Maintenance Guide” or ”Owner’s Manual Supplement”).

⚠ CAUTION

Never turn off the engine to coast down hills. Your power steering and brake booster will not function without the engine running. Also, the emission control system operates properly only when the engine is running.

SECTION 4

IN CASE OF AN EMERGENCY

If your vehicle will not start 168
If your engine stalls while driving 171
If your vehicle overheats 171
If you have a flat tire 172
If your vehicle needs to be towed 179
If you cannot shift automatic transmission selector lever 184
If you lose your keys 184

If your vehicle will not start—
(a) Simple checks

Before making these checks, make sure you have followed the correct starting procedure given in ”How to start the engine” in Section 3 and that you have sufficient fuel.

If the engine is not turning over or is turning over too slowly—

1. Check that the battery terminals are tight and clean.
2. If the battery terminals are O.K., switch on the interior light.
3. If the light is out, dim or goes out when the starter is cranked, the battery is discharged. You may try jump starting. See ”(c) Jump starting” for further instructions.

If the light is O.K., but the engine still will not start, it needs adjustment or repair. Call a Toyota dealer or qualified repair shop.

NOTICE

Do not pull-or push-start the vehicle. It may damage the vehicle or cause a collision when the engine starts. Also the three-way catalytic converter may overheat and become a fire hazard.

If the engine turns over at its normal speed but will not start—

1. The engine may be flooded because of repeated cranking. See “(b) Starting a flooded engine” for further instructions.
2. If the engine still will not start, it needs adjustment or repair. Call a Toyota dealer or qualified repair shop.

(b) Starting a flooded engine

If the engine will not start, your engine may be flooded because of repeated cranking.

If this happens, turn the key to ”START” with the accelerator pedal held down. Keep the key and accelerator pedal so for 15 seconds and release them. Then try starting the engine with your foot off the accelerator pedal.

If the engine does not start after 15 seconds of cranking, release the key, wait a few minutes and try again.

If the engine still will not start, it needs adjustment or repair. Call a Toyota dealer or qualified repair shop for assistance.

NOTICE

Do not crank for more than 30 seconds at a time. This may overheat the starter and wiring systems.

(c) Jump starting

To avoid serious personal injury and damage to your vehicle which might result from battery explosion, acid burns, electrical burns, or damaged electronic components, these instructions must be followed precisely.

If you are unsure about how to follow this procedure, we strongly recommend that you seek the help of a competent mechanic or towing service.

⚠ CAUTION

- Batteries contain sulfuric acid which is poisonous and corrosive. Wear protective safety glasses when jump starting, and avoid spilling acid on your skin, clothing, or vehicle.
- If you should accidentally get acid on yourself or in your eyes, remove any contaminated clothing and flush the affected area with water immediately. Then get immediate medical attention. If possible, continue to apply water with a sponge or cloth while en route to the medical office.
- The gas normally produced by a battery will explode if a flame or spark is brought near. Use only standardized jumper cables and do not smoke or light a match while jump starting.

NOTICE

The battery used for boosting must be 12 V. Do not jump start unless you are sure that the booster battery is correct.

JUMP STARTING PROCEDURE

1. If the booster battery is installed in another vehicle, make sure the vehicles are not touching. Turn off all unnecessary lights and accessories.
2. If required, remove all the vent plugs from the booster and discharged batteries. Lay a cloth over the open vents on the batteries. (This helps reduce the explosion hazard, personal injuries and burns.)
3. If the engine in the vehicle with the booster battery is not running, start it and let it run for a few minutes. During jump starting, run the engine at about 2000 rpm with the accelerator pedal lightly depressed.

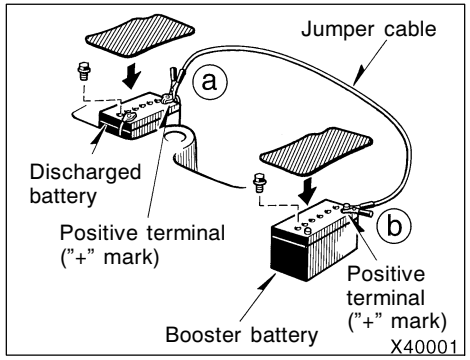

4. Make the cable connections in the order a, b, c, d.

   a. Connect the clamp of the positive (red) jumper cable to the positive (+) terminal on the discharged battery.

   b. Connect the clamp at the other end of the positive (red) jumper cable to the positive (+) terminal on the booster battery.

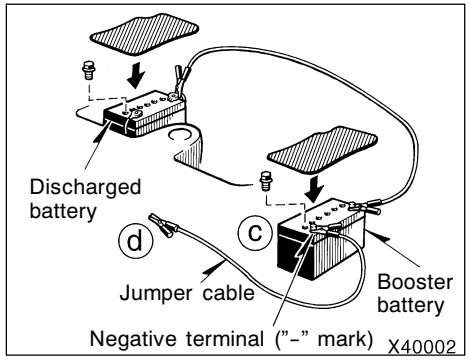

   c. Connect the clamp of the negative (black) cable to the negative (-) terminal on the booster battery.

   d. Connect the clamp at the other end of the negative (black) jumper cable to a solid, stationary, unpainted, metallic point of the vehicle with the discharged battery.

   The recommended connecting point is shown in the following illustration:

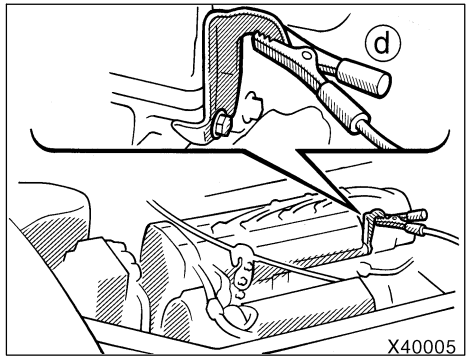

Connecting point

   Do not connect it to or near any part that moves when the engine is cranked.

⚠ CAUTION

When making the connections, to avoid serious injury, do not lean over the battery or accidentally let the jumper cables or clamps touch anything except the correct battery terminals or the ground.

5. Start your engine in the normal way. After starting, run it at about 2000 rpm for several minutes with the accelerator pedal lightly depressed.
6. Carefully disconnect the cables in the exact reverse order: the negative cable and then the positive cable.
7. Carefully dispose of the battery cover cloths—they may now contain sulfuric acid.
8. If removed, replace all the battery vent plugs.

If the cause of your battery discharging is not apparent (for example, lights left on), you should have it checked.

If your engine stalls while driving

If your engine stalls while driving...

1. Reduce your speed gradually, keeping a straight line. Move cautiously off the road to a safe place.
2. Turn on your emergency flashers.
3. Try starting the engine again.

If the engine will not start, see ”If your vehicle will not start”.

⚠ CAUTION

If the engine is not running, the power assist for the brakes and steering will not work so steering and braking will be much harder than usual.

If your vehicle overheats

If your engine coolant temperature gauge indicates overheating, if you experience a loss of power, or if you hear a loud knocking or pinging noise, the engine has probably overheated. You should follow this procedure...

1. Pull safely off the road, stop the vehicle and turn on your emergency flashers. Put the transmission in ”P” (automatic) or neutral (manual) and apply the parking brake. Turn off the air conditioning if it is being used.
2. If coolant or steam is boiling out of the radiator or reservoir, stop the engine. Wait until the steam subsides before opening the hood. If there is no coolant boiling over or steam, leave the engine running and make sure the electric cooling fan is operating. If it is not, turn the ignition off.

⚠ CAUTION

To help avoid personal injury, keep the hood closed until there is no steam. Escaping steam or coolant is a sign of very high pressure.

3. Look for obvious coolant leaks from the radiator, hoses, and under the vehicle. However, note that water draining from the air conditioning is normal if it has been used.

⚠ CAUTION

When the engine is running, keep hands and clothing away from the moving fan and engine drive belts.

4. If the coolant is leaking, stop the engine immediately. Call a Toyota dealer for assistance.
5. If there are no obvious leaks, check the coolant reservoir. If it is dry, add coolant to the reservoir while the engine is running. Fill it about half full.

⚠ CAUTION

Do not attempt to remove the radiator cap when the engine and radiator are hot. Serious injury could result from scalding hot fluid and steam blown out under pressure.

6. After the engine coolant temperature has cooled to normal, again check the coolant level in the reservoir. If necessary, bring it up to half full again. Serious coolant loss indicates a leak in the system. You should have it checked as soon as possible at your Toyota dealer.

If you have a flat tire—

1. Reduce your speed gradually, keeping a straight line. Move cautiously off the road to a safe place well away from the traffic. Avoid stopping on the center divider of a highway. Park on a level spot with firm ground.
2. Stop the engine and turn on your emergency flashers.
3. Firmly set the parking brake and put the transmission in ”P” (automatic) or reverse (manual).
4. Have everyone get out of the vehicle on the side away from traffic.
5. Read the following instructions thoroughly.

⚠ CAUTION

When jacking, be sure to observe the following to reduce the possibility of personal injury:

- Follow jacking instructions.
- Do not put any part of your body under the vehicle supported by the jack. Personal injury may occur.
- Do not start or run the engine while your vehicle is supported by the jack.

- Stop the vehicle on a level firm ground, firmly set the parking brake and put the transmission in "P" (automatic) or reverse (manual). Block the wheel diagonally opposite to the one being changed if necessary.
- Make sure to set the jack properly in the jack point. Raising the vehicle with jack improperly positioned will damage the vehicle or may allow the vehicle to fall off the jack and cause personal injury.
- Never get under the vehicle when the vehicle is supported by the jack alone.
- Use the jack only for lifting your vehicle during wheel changing.
- Do not raise the vehicle with someone in the vehicle.
- When raising the vehicle, do not put an object on or under the jack.
- Raise the vehicle only high enough to remove and change the tire.

NOTICE

Do not continue driving with a deflated tire. Driving even a short distance can damage a tire beyond repair.

—Required tools and spare tire

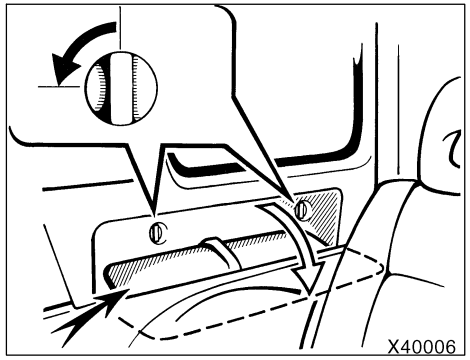

1. Get the required tools and spare tire.

   Tool bag (in the right side miscellany box)
   Jack (under the right side front seat)
   Spare tire (on the back door or tail gate)

To prepare yourself for an emergency, you should familiarize yourself with the use of the jack, each of the tools and their storage locations.

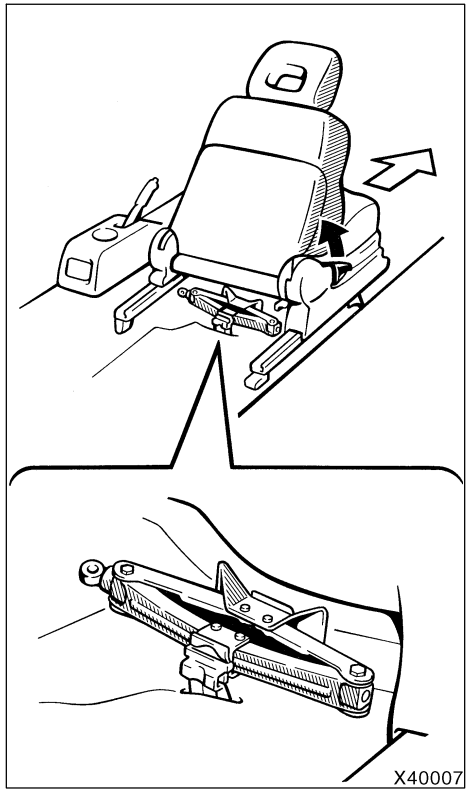

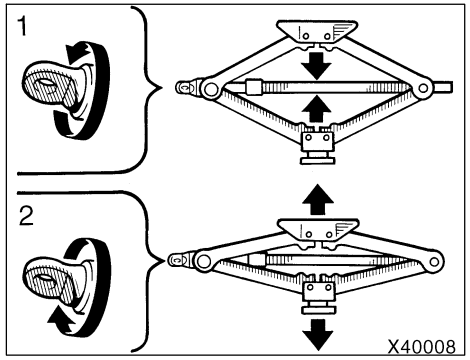

To remove the jack, move the seat to the front-most position and turn the jack joint by hand.

To remove: Turn the joint in direction 1 until the jack is free.
To store: Turn the joint in direction 2 until the jack is firmly secured to prevent it flying forward during a collision or sudden braking.

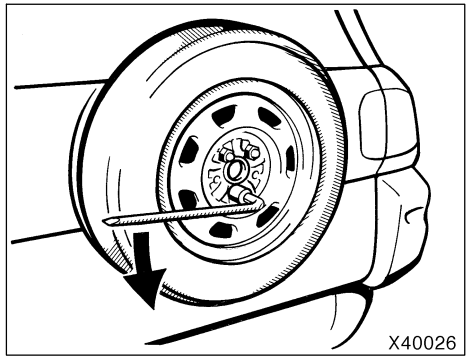

To remove the spare tire:

Turn the hold-down nuts counterclockwise with the wheel nut wrench and remove them.

When storing the spare tire, put it in place and secure it to prevent it from flying forward during a collision or sudden braking.

—Blocking the wheel

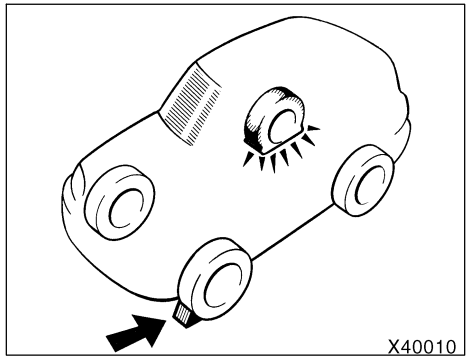

2. Block the wheel diagonally opposite the flat tire to keep the vehicle from rolling when it is jacked up.

When blocking the wheel, place a wheel block from the front for the front wheels or from the rear for the rear wheels.

—Removing wheel ornament

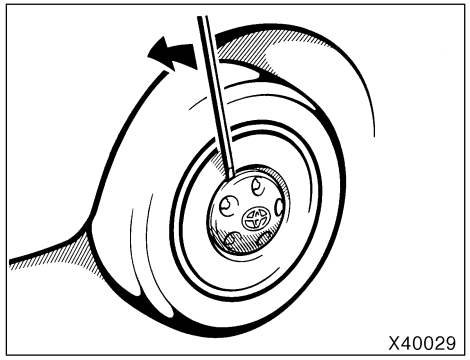

Steel wheels

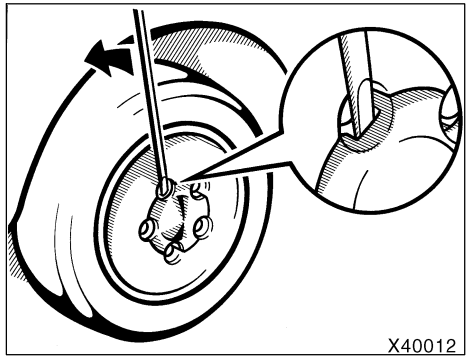

Aluminum wheels

3. Remove the wheel ornament.

Pry off the wheel ornament, using the beveled end of the wheel nut wrench as shown.

⚠ CAUTION

Do not try to pull the ornament by hand. Take due care in handling the ornament to avoid unexpected personal injury.

—Loosening wheel nuts

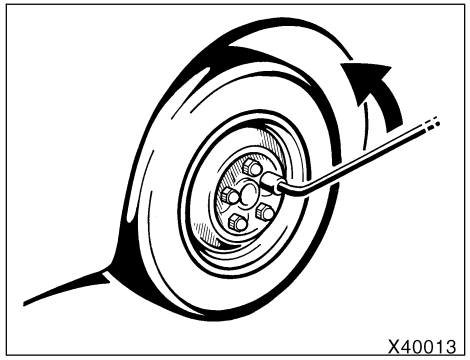

4. Loosen all the wheel nuts.

Always loosen the wheel nuts before raising the vehicle.

Turn the wheel nuts counterclockwise to loosen. To get maximum leverage, fit the wrench to the nut so that the handle is on the right side, as shown above. Grab the wrench near the end of the handle and pull up on the handle. Be careful that the wrench does not slip off the nut.

Do not remove the nuts yet—just unscrew them about one-half turn.

—Positioning the jack

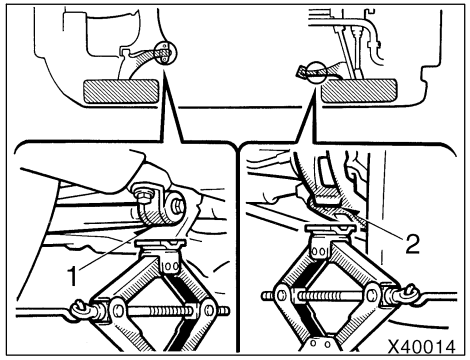

5. Position the jack at the following jack points.
   1 Front suspension arm rear mounting
   2 Rear suspension arm

Make sure the jack is positioned on a level and solid place.

—Raising your vehicle

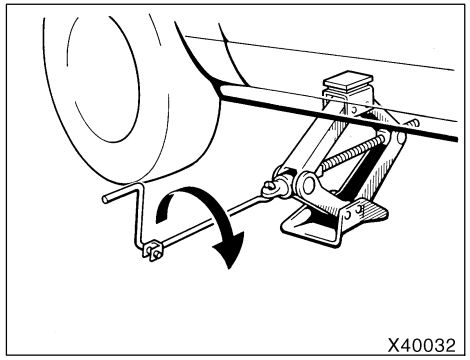

6. After making sure that no one is in the vehicle, raise it high enough so that the spare tire can be installed.

Remember you will need more ground clearance when putting on the spare tire than when removing the flat tire.

To raise the vehicle, insert the jack handle into the jack (it is a loose fit) and turn it clockwise. As the jack touches the vehicle and begins to lift, double-check that it is properly positioned.

—Changing wheels

⚠ CAUTION

Never get under the vehicle when the vehicle is supported by the jack alone.

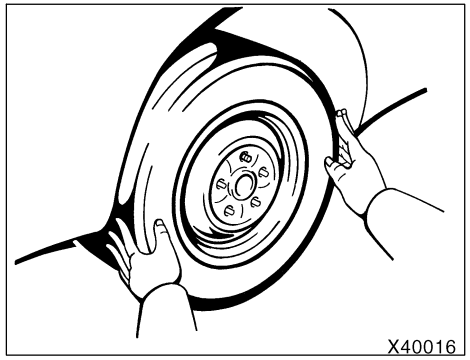

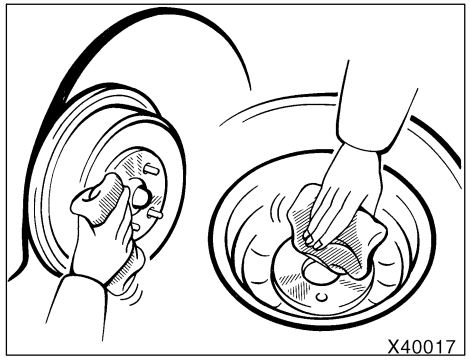

7. Remove the wheel nuts and change tires.

Lift the flat tire straight off and put it aside.

Roll the spare wheel into position and align the holes in the wheel with the bolts. Then lift up the wheel and get at least the top bolt started through its hole. Wiggle the tire and press it back over the other bolts.

Before putting on wheels, remove any corrosion on the mounting surfaces with a wire brush or such. Installation of wheels without good metal-to-metal contact at the mounting surface can cause wheel nuts to loosen and eventually cause a wheel to come off while driving. Therefore after the first 1600 km (1000 miles), check to see that the wheel nuts are tight.

—Reinstalling wheel nuts

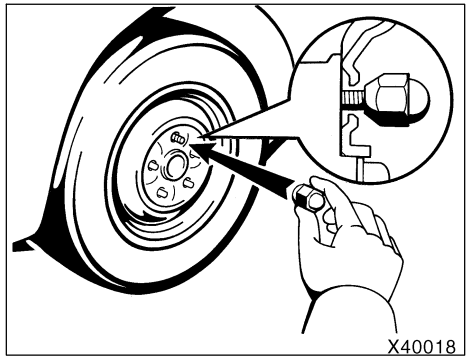

8. Reinstall all the wheel nuts finger tight.

Reinstall the wheel nuts (tapered end inward) and tighten them as much as you can by hand. Press back on the tire back and see if you can tighten them more.

—Lowering your vehicle

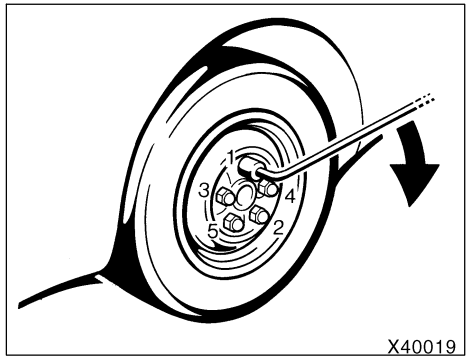

9. Lower the vehicle completely and tighten the wheel nuts.

Turn the jack handle counterclockwise to lower the vehicle.

Use only the wheel nut wrench and turn it clockwise to tighten the nuts. Do not use other tools or any additional leverage other than your hands, such as a hammer, pipe or your foot. Make sure the wrench is securely engaged over the nut.

Tighten each nut a little at a time in the order shown. Repeat the process until all the nuts are tight.

⚠ CAUTION

When lowering the vehicle, make sure all portions of your body and all other persons around will not be injured as the vehicle is lowered to the ground.

—Reinstalling wheel ornament

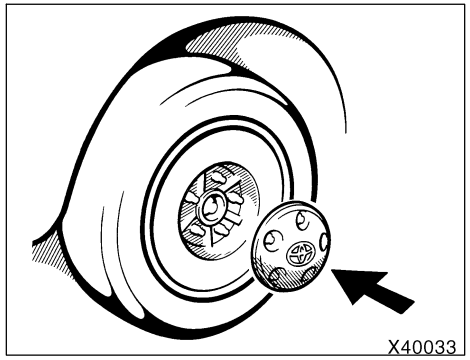

10. Reinstall the wheel ornament.

Put the wheel ornament into position and then tap it firmly with the side or heel of your hand to snap it into place.

⚠ CAUTION

Take due care in handling the ornament to avoid unexpected personal injure.

—After changing wheels

11. Check the air pressure of the replaced tire.

Adjust the air pressure to the specification designated in Section 8. If the pressure is lower, drive slowly to the nearest service station and fill to the correct pressure.

Do not forget to reinstall the tire inflation valve cap as dirt and moisture could get into the valve core and possibly cause air leakage. If the cap is missing, have a new one put on as soon as possible.

12. Restow all the tools, jack and flat tire securely.

As soon after changing wheels as possible, tighten the wheel nuts to the torque specified in Section 8 with a torque wrench, have a technician repair the flat tire and replace the spare tire with it.

⚠ CAUTION

Before driving, make sure all the tools, jack and flat tire are securely in place in their storage location to reduce the possibility of personal injury during a collision or sudden braking.

If your vehicle needs to be towed—

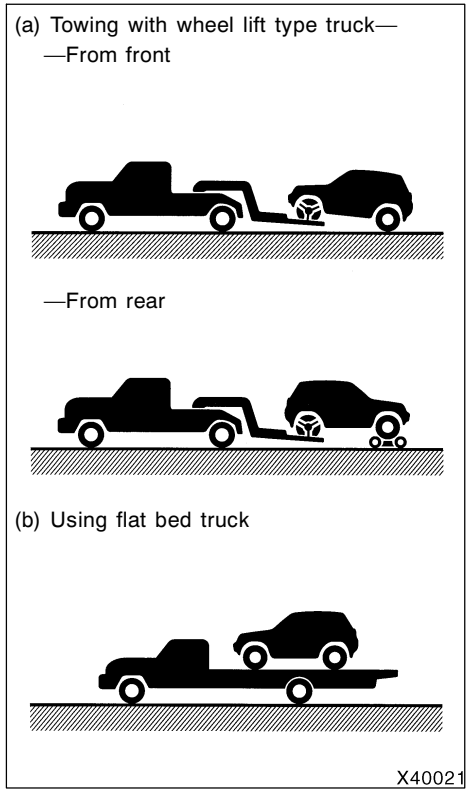

Two-wheel drive models

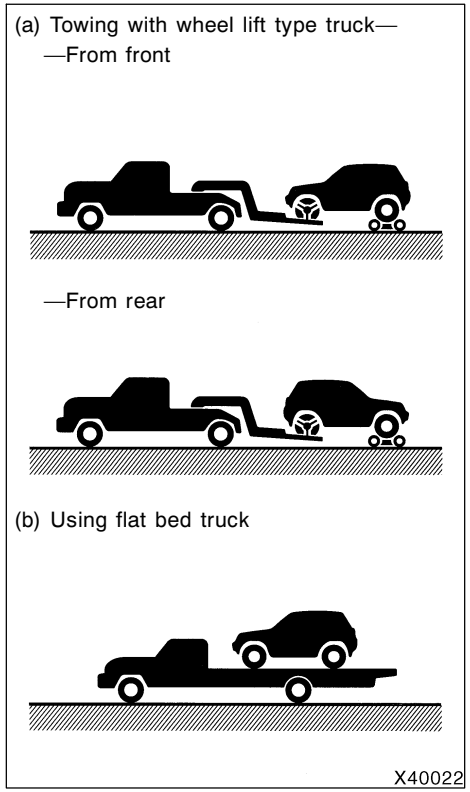

Four-wheel drive models

If towing is necessary, we recommend you to have it done by your Toyota dealer or a commercial tow truck service. In consultation with them, have your vehicle towed using either (a) or (b).

Only when you cannot receive a towing service from a Toyota dealer or commercial tow truck service, tow your vehicle carefully in accordance with the instructions given in "—Emergency towing" in this section.

Proper equipment will help ensure that your vehicle is not damaged while being towed. Commercial operators are generally aware of the state/provincial and local laws pertaining to towing.

Your vehicle can be damaged if it is towed incorrectly. Although most operators know the correct procedure, it is possible to make a mistake. To avoid damage to your vehicle, make sure the following precautions are observed. If necessary, show this page to the tow truck driver.

TOWING PRECAUTIONS:

Use a safety chain system for all towing, and abide by the state/provincial and local laws. The wheels and axle on the ground must be in good condition. If they are damaged, use a towing dolly.

Two-wheel drive models—

(a) Towing with wheel lift type truck

From front—Release the parking brake.

NOTICE

When lifting wheels, take care to ensure adequate ground clearance for towing at the opposite end of the raised vehicle. Otherwise, the bumper and/or underbody of the towed vehicle will be damaged during towing.

From rear—

- Manual transmission:

  We recommend using a towing dolly under the front wheels. If you do not use a towing dolly, place the ignition key in the "ACC" position and put the transmission in neutral.

NOTICE

Do not tow with the key removed or in the "LOCK" position when towing from the rear without a towing dolly. The steering lock mechanism is not strong enough to hold the front wheels straight.

- Automatic transmission:

  Use a towing dolly under the front wheels.

NOTICE

Never tow a vehicle with an automatic transmission from the rear with the front wheels on the ground, as this may cause serious damage to the transmission.

(b) Using flat bed truck

Four-wheel drive models—

(a) Towing with wheel lift type truck

Use a towing dolly under the wheels not lifted by the truck.

(b) Using flat bed truck

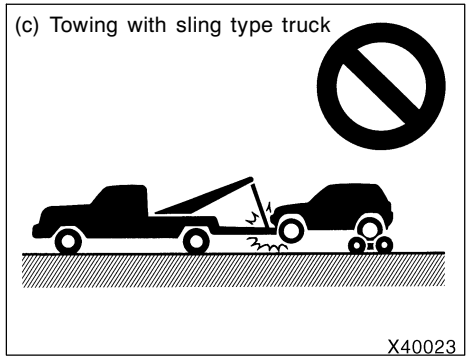

All models—

(c) Towing with sling type truck

NOTICE

Do not tow with sling type truck, either from the front or rear. This may cause body damage.

—Emergency towing

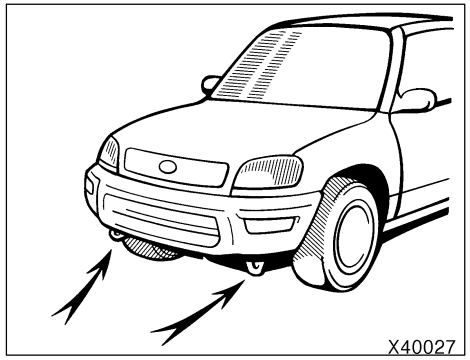

Front

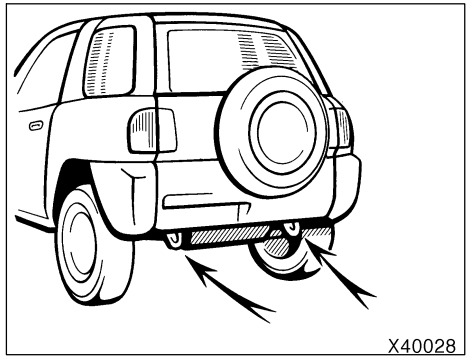

Rear

If towing is necessary, we recommend you to have it done by your Toyota dealer or a commercial tow truck service.

If towing service is not available in an emergency, your vehicle may be temporarily towed by a cable or chain secured to one of the emergency towing eyelets under the vehicle. Use extreme caution when towing vehicles.

NOTICE

Only use specified towing eyelet; otherwise your vehicle may be damaged.

A driver must be in the vehicle to steer it and operate the brakes.

Towing in this manner may be done only on hard-surfaced roads for a short distance and at low speeds. Also, the wheels, axles, drive train, steering and brakes must all be in good condition.

⚠ CAUTION

Use extreme caution when towing vehicles. Avoid sudden starts or erratic driving maneuvers which would place excessive stress on the emergency towing eyelet and towing cable or chain. The eyelet and towing cable or chain may break and cause serious injury or damage.

NOTICE

Use only a cable or chain specifically intended for use in towing vehicles. Securely fasten the cable or chain to the towing eyelet provided.

Before towing, release the parking brake and put the transmission in neutral (manual) or "N" (automatic). The key must be in "ACC" (engine off) or "ON" (engine running).

⚠ CAUTION

If the engine is not running, the power assist for the brakes and steering will not work so steering and braking will be much harder than usual.

—Emergency towing eyelet precautions

- Before emergency towing, check that the eyelet is not broken or damaged and that the installation bolts are not loose.
- Fasten the towing cable or chain securely to the eyelet.
- Do not jerk the eyelet. Apply steady and even force.
- To avoid damaging the eyelet, do not pull from the side or at a vertical angle. Always pull straight ahead.

⚠ CAUTION

If the emergency towing eyelet is used to get out when your vehicle becomes struck in mud, sand or other condition from which the vehicle cannot be driven out under its own power, make sure to observe the precautions mentioned below. Otherwise, excessive stress will be put on the eyelet and the towing cable or chain may break, causing serious injury or damage.

- If the towing vehicle can hardly move, do not forcibly continue the towing. Contact your Toyota dealer or a commercial tow truck service for assistance.
- Tow the vehicle as straight ahead as possible.
- Keep away from the vehicle during towing.

—Tips for towing a stuck vehicle

The following methods are effective to get out when your vehicle is struck in mud, sand or other condition from which the vehicle cannot be driven out under its own power. Use extreme caution when towing vehicles. In addition, keep away from the vehicles and towing cable or chain when towing.

- Remove the soil and sand in the front and the back of the tires.
- Place a stone or wood under the tires.

If you cannot shift automatic transmission selector lever

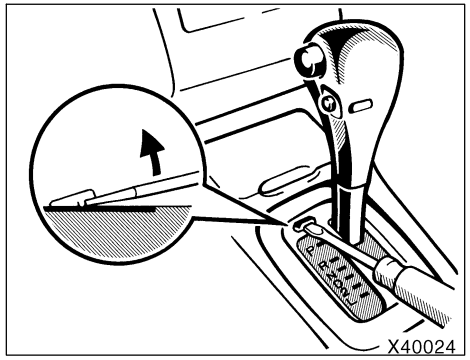

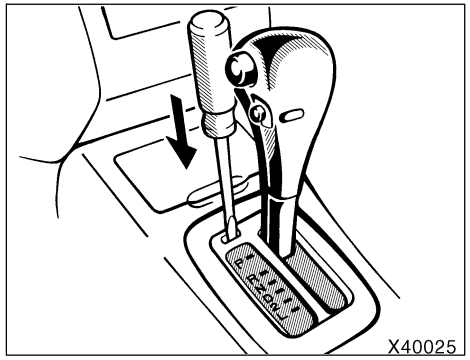

If you cannot shift the selector lever out of ”P” position to other positions even though the brake pedal is depressed, use the shift lock override button as follows:

1. Turn the ignition key to ”LOCK” position. Make sure the parking brake is set.
2. Pry up the cover with a flat-bladed screwdriver or equivalent.
3. Insert the screwdriver or equivalent into the hole to push down the shift lock override button. You can shift out of ”P” position only while pushing the button.
4. Shift into ”N” position.
5. Insert the cover.
6. Start the engine. For your safety, keep the brake pedal depressed.

Be sure to have the system checked by your Toyota dealer as soon as possible.

If you lose your keys

You can purchase a new key at your Toyota dealer if you can give them the key number.

See the suggestion given in ”Keys” in Section 1-2.

If your keys are locked in the vehicle and you cannot get a duplicate, many Toyota dealers can still open the door for you, using their special tools. If you must break a window to get in, we suggest breaking the smallest side window because it is the least expensive to replace. Be extremely cautious to avoid cuts from the glass.

SECTION 5

CORROSION PREVENTION AND APPEARANCE CARE

Protecting your Toyota from corrosion 186
Washing and waxing your Toyota 187
Cleaning the interior 190

Protecting your Toyota from corrosion

Toyota, through its diligent research, design and use of the most advanced technology available, has done its part to help prevent corrosion and has provided you with the finest quality vehicle construction. Now, it is up to you. Proper care of your Toyota can help ensure long-term corrosion prevention.

The most common causes of corrosion to your vehicle are:

- The accumulation of road salt, dirt and moisture in hard-to-reach areas under the vehicle.
- Chipping of paint, or undercoating caused by minor accidents or by stones and gravel.

Care is especially important if you live in particular areas or operate your vehicle under certain environmental conditions:

- Road salt or dust control chemicals will accelerate corrosion, as will the presence of salt in the air near the seacoast or in areas of industrial pollution.
- High humidity accelerates corrosion especially when temperatures range just above the freezing point.
- Wetness or dampness to certain parts of your vehicle for an extended period of time, may cause corrosion even though other parts of the vehicle may be dry.
- High ambient temperatures can cause corrosion to those components of the vehicle which are prevented from quick-drying due to lack of proper ventilation.

The above signifies the necessity to keep your vehicle, particularly the underside, as clean as possible and to repair any damage to paint or protective coatings as soon as possible.

To help prevent corrosion on your Toyota, follow these guidelines:

Wash your vehicle frequently. It is, of course, necessary to keep your vehicle clean by regular washing, but to prevent corrosion, the following points should be observed:

- If you drive on salted roads in the winter or if you live near the ocean, you should hose off the undercarriage at least once a month to minimize corrosion.
- High pressure water or steam is effective for cleaning the vehicle's underside and wheel housings. Pay particular attention to these areas as it is difficult to see all the mud and dirt. It will do more harm than good to simply wet the mud and debris without removing them. The lower edge of doors, rocker panels and frame members have drain holes which should not be allowed to clog with dirt as trapped water in these areas can cause corrosion.
- Wash the underside of the vehicle thoroughly when winter is over.

See "Washing and waxing your Toyota" for more tips.

Check the condition of your vehicle's paint and trim. If you find any chips or scratches in the paint, touch them up immediately to prevent corrosion from starting. If the chips or scratches have gone through the bare metal, have a qualified body shop make the repair.

Check the interior of your vehicle. Water and dirt can accumulate under the floor mats and could cause corrosion. Occasionally check under the mats to make sure the area is dry. Be particularly careful when transporting chemicals, cleansers, fertilizers, salt, etc; these should be transported in proper containers. If a spill or leak should occur, immediately clean and dry the area.

Use mud shields on your wheels. If you drive on salted or gravel roads, mud shields help protect your vehicle. Full-size shields, which come as near to the ground as possible, are the best. We recommend that the fittings and the area where the shields are installed be treated to resist corrosion. Your Toyota dealer will be happy to assist in supplying and installing the shields if they are recommended for your area.

Keep your vehicle in a well ventilated garage or a roofed place. Do not park your vehicle in a damp, poorly ventilated garage. If you wash your vehicle in the garage, or if you drive it in covered with water or snow, your garage may be so damp it will cause corrosion. Even if your garage is heated, a wet vehicle can corrode if the ventilation is poor.

Washing and waxing your Toyota

Washing your Toyota

Keep your vehicle clean by regular washing.

The following cases may cause weakness to the paint or corrosion to the body and parts. Wash your vehicle as soon as possible.

- When driving in a coastal area
- When driving on a road sprinkled with antifreeze
- When having stuck of coal tar, tree sap, bird droppings and carcass of an insect
- When driving in the areas where there is a lot of smoke, soot, dust, iron dust and chemical substance
- When the vehicle becomes remarkably dirty with dust and mud

Hand-washing your Toyota

Work in the shade and wait until the vehicle body is not hot to the touch.

⚠ CAUTION

When cleaning under floor or chassis, be careful not to injure your hands.

Soft-top models—For washing instruction for the soft-top, see ”Soft-top”.

1. Rinse off loose dirt with a hose. Remove any mud or road salt from the underside of the vehicle or in the wheel wells.

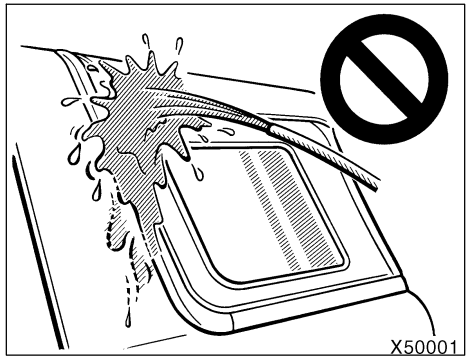

Soft-top models: Spray water on the quarter windows, rear window or top seals from above, at a 45° angle to the ground.

NOTICE

Soft-top models only:

Do not spray water at side windows, rear window and top seals in a way which may cause water to enter the vehicle.

2. Wash with a mild car-wash soap, mixed according to the manufacturer's instructions. Use a soft cotton mitt and keep it wet by dipping it frequently into the wash water. Do not rub hard—let the soap and water remove the dirt.

Plastic wheel ornaments: The plastic wheel ornaments are damaged easily by organic substances. If any organic substances splashes an ornament, be sure to wash it off with water and check if the ornament is damaged.

⚠ CAUTION

Do not attach the heavily damaged plastic wheel ornament. It may fly off the wheel and cause accidents while the vehicle is moving.

Aluminum wheels: Use only a mild soap or neutral detergent.

Plastic bumpers: Wash carefully. Do not scrub with abrasive cleaners. The bumper faces are soft.

Road tar: Remove with turpentine or cleaners that are marked safe for painted surfaces.

NOTICE

Do not use organic substances (gasoline, kerosene, benzine or strong solvents), which may be toxic or cause damage.

3. Rinse thoroughly—dried soap can cause streaking. In hot weather you may need to rinse each section right after you wash it.
4. To prevent water spots, dry the vehicle using a clean soft cotton towel. Do not rub or press hard—you might scratch the paint.

Automatic car wash

Hardtop models may be washed in an automatic car wash, but remember that the paint can be scratched by some type of brushes, unfiltered washing water, or the washing process itself. Scratching reduces paint durability and gloss, especially on darker colors. The manager of the car wash should be able to advise you whether the process is safe for the paint on your vehicle.

NOTICE

- To prevent damage to the antenna, make sure it is retracted before driving your Toyota through an automatic car wash.
- Soft-top models—Do not run soft-top models through automatic car washes or possible damage to the soft-top may result.

Waxing your Toyota

Polishing and waxing is recommended to maintain the original beauty of your Toyota's finish.

Once a month or if the vehicle surface does not repel water well, apply wax.

1. Always wash and dry the vehicle before you begin waxing, even if you are using a combined cleaner and wax.
2. Use a good quality polish and wax. If the finish has become extremely weathered, use a car-cleaning polish, followed by a separate wax. Carefully follow the manufacturer's instructions and precautions. Be sure to polish and wax the chrome trim as well as the paint.
3. Wax the vehicle again when water does not bead but remains on the surface in large patches.

NOTICE

Always remove the plastic bumpers if your vehicle is re-painted and placed in a high heat paint waxing booth. High temperatures could damage the bumpers.

Soft-top

Wash using mild soap suds, lukewarm water and a sponge.

NOTICE

Do not use harsh or abrasive cleaners or bleaching agents on the top material or damage may result.

If further cleaning is required after using soap and water, a mild foaming cleaner can be used. First, rinse the top. then use a mild foaming cleaner on the entire top. Scrub with a small soft bristle hand-brush. Add water as needed until the cleaner gets soapy. Use a cloth or sponge to remove dirt so it will not be ground into the top. Be careful to keep any cleaner from drying on the body paint as it may cause streaks.

After the top has been cleaned, rinse vehicle with clean water to remove all traces of cleaner.

After cleaning, always make sure the top is completely dry before you lower it. Lowering the top while wet or damp may cause interior water damage, water stains or mildew of the top material.

Cleaning the interior

⚠ CAUTION

Do not wash the vehicle floor with water, or allow water to get onto the floor when cleaning the vehicle interior or exterior. Water may get into audio components or other electrical components above or under the floor carpet (or mat) and cause a malfunction; and it may cause body corrosion.

Vinyl interior

The vinyl upholstery may be easily cleaned with a mild soap or detergent and water.

First vacuum over the upholstery to remove loose dirt. Then, using a sponge or soft cloth, apply the soap solution to the vinyl. After allowing it to soak in for a few minutes to loosen the dirt, remove the dirt and wipe off the soap with a clean damp cloth. If all the dirt do not come off, repeat the procedure. Commercial foaming-type vinyl cleaners are also available which work well. Follow the manufacturer's instructions.

NOTICE

Do not use solvent, thinner, gasoline or window cleaner on the interior.

Carpets

Use a good foam-type shampoo to clean the carpets.

Begin by vacuuming thoroughly to remove as much dirt as possible. Several types of foam cleaners are available; some are in aerosol cans and others are powders or liquids which you mix with water to produce a foam. To shampoo the carpets, use a sponge or brush to apply the foam. Rub in overlapping circles.

Do not apply water—the best results are obtained by keeping the carpet as dry as possible. Read the shampoo instructions and follow them closely.

Seat belts

The seat belts may be cleaned with mild soap and water or with lukewarm water.

Use a cloth or sponge. As you are cleaning, check the belts for excessive wear, fraying, or cuts.

NOTICE

- Do not use dye or bleach on the belts—it may weaken them.
- Do not use the belts until they become dry.

Windows

The windows may be cleaned with any household window cleaner.

NOTICE

When cleaning the inside of the windows, be careful not to scratch or damage the heater wires on the rear window.

Air conditioning control panel, car audio, instrument panel, console panel, and switches

Use a soft damp cloth for cleaning.

Soak a clean soft cloth in water or lukewarm water then lightly wipe off dirt.

NOTICE

- Do not use organic substances (solvents, kerosene, alcohol, gasoline, etc.) or alkaline or acidic solutions. These chemicals can cause discoloring, staining or peeling of the surface.
- If you use cleaners or polishing agents, make sure their ingredients do not include the substances mentioned above.
- If you use a liquid car freshener, do not apply the liquid onto the vehicle's interior surfaces. It may contain the ingredients mentioned above. Immediately clean any spill using the method mentioned above.

Leather Interior

The leather upholstery may be cleaned with neutral detergent for wool.

Remove dirt using a soft cloth dampened with 5% solution of neutral detergent for wool. Then thoroughly wipe off all traces of detergent with a clean damp cloth.

After cleaning or whenever any part of the leather gets wet, dry with a soft clean cloth. Allow the leather to dry in a ventilated shaded area.

NOTICE

- If a stain should fail to come out with a neutral detergent, apply a cleaner that does not contain an organic solvent.
- Never use organic substances such as benzine, alcohol or gasoline, or alkaline or acid solutions for cleaning the leather as these could cause discoloring.
- Use of a nylon brush or synthetic fiber cloth, etc. may scratch the fine grained surface of the leather.
- Mildew may develop on soiled leather upholstery. Be especially careful to avoid oil spots. Try to keep your upholstery always clean.
- Long exposure to direct sunlight may cause the leather surface to harden and shrink. Keep your vehicle in a shaded area, especially in the summer.
- The interior of your vehicle is apt to heat up on hot summer days, so avoid placing on the upholstery items made of vinyl or plastic or containing wax as these tend to stick to leather when warm.
- Improper cleaning of the leather upholstery could result in discoloration or staining.

If you have any questions about the cleaning of your Toyota, your local Toyota dealer will be pleased to answer them.

SECTION 6

VEHICLE MAINTENANCE AND CARE

Maintenance requirements 194
General maintenance 195
Does your vehicle need repairing? 197

For scheduled maintenance information, please refer to the ”Scheduled Maintenance Guide” or ”Owner’s Manual Supplement”.

Maintenance requirements

Your Toyota vehicle has been designed to for fewer maintenance requirements with longer service intervals to save both your time and money. However, each regular maintenance, as well as day-to-day care, is more important than ever before to ensure smooth, and trouble-free, safe, and economical drivings.

It is the owner's responsibility to make sure the specified maintenance, including general maintenance service, is performed. Note that both the new vehicle and emission control system warranties specify that proper maintenance and care must be performed. See "Owner's Warranty Information Booklet" or "Owner's Manual Supplement" for complete warranty information.

General maintenance

General maintenance items are those day-to-day care practices that are important to your vehicle for proper operation. It is the owner's responsibility to ensure that the general maintenance items are performed regularly.

These checks or inspections can be done either by yourself or a qualified technician, or if you prefer, your Toyota dealer will be pleased to do them at a nominal cost.

Scheduled maintenance

The scheduled maintenance items listed in the "Scheduled Maintenance Guide" or "Owner's Manual Supplement" are those required to be serviced at regular intervals.

For details of your maintenance schedule, read the "Scheduled Maintenance Guide" or "Owner's Manual Supplement".

It is recommended that any replacement parts used for maintenance or for the repair of the emission control system be Toyota supplied.

The owner may elect to use non-Toyota supplied parts for replacement purposes without invalidating the emission control system warranty. However, use of replacement parts which are not of equivalent quality may impair the effectiveness of the emission control systems.

You may also elect to have maintenance, replacement, or repair of the emission control devices and system performed by any automotive repair establishment or individual without invalidating this warranty. See "Owner's Warranty Information Booklet" or "Owner's Manual Supplement" for complete warranty information.

Where to go for service?

Toyota technicians are well-trained specialists and are kept up to date with the latest service information through technical bulletins, service tips, and in-dealership training programs. They learn to work on Toyotas before they work on your vehicle, rather than while they are working on it.

You can be confident that your Toyota dealer's service department performs the best job to meet the maintenance requirements on your vehicle—reliably and economically.

Your copy of the repair order is proof that all required maintenance has been performed for warranty coverage. And if any problems should arise with your vehicle while under warranty, your Toyota dealer will promptly take care of it. Again, be sure to keep a copy of the repair order for any service performed on your Toyota.

What about do-it-yourself maintenance?

Many of the maintenance items are easy to do yourself if you have a little mechanical ability and a few basic automotive tools. Simple instructions for how to perform them are presented in Section 7.

If you are a skilled do-it-yourself mechanic, the Toyota service manuals are recommended. Please be aware that do-it-yourself maintenance can affect your warranty coverage. See "Owner's Warranty Information Booklet" or "Owner's Manual Supplement" for the details.

General maintenance

Listed below are the general maintenance items that should be performed as frequently as specified. In addition to checking the items listed, if you notice any unusual noise, smell or vibration, you should investigate the cause or take your vehicle to your Toyota dealer or a qualified service shop immediately. It is recommended that any problem you notice be brought to the attention of your dealer or the qualified service shop for their advice.

⚠ CAUTION

Make these checks only where adequate ventilation can be obtained if you run the engine.

OUTSIDE THE VEHICLE

Items listed below should be performed from time to time, unless otherwise specified.

Tire pressure

Check the pressure with a gauge every two weeks, or at least once a month. See Section 7-2 for additional information.

Tire surface and wheel nuts

Check the tires carefully for cuts, damage or excessive wear. See Section 7-2 for additional information. When checking the tires, make sure no nuts are missing, and check the nuts for looseness. Tighten them if necessary.

Tire rotation

Rotate the tires every 12000 km (7500 miles). See Section 7-2 for additional information.

Fluid leaks

Check underneath for leaking fuel, oil, water or other fluid after the vehicle has been parked for a while. If you smell fuel fumes or notice any leak, have the cause found and corrected immediately.

Doors and engine hood

Check that all doors and back door operate smoothly and all latches lock securely. Make sure the engine hood secondary latch secures the hood from opening when the primary latch is released.

INSIDE THE VEHICLE

Items listed below should be checked regularly, e.g. while performing periodic services, cleaning the vehicle, etc.

Lights

Make sure the headlights, stop lights, tail lights, turn signal lights, and other lights are all working.

Service reminder indicators and warning buzzers

Check that all service reminder indicators and warning buzzers function properly.

Steering wheel

Check that it has the specified freeplay. Be alert for changes in steering condition, such as hard steering or strange noise.

Seats

Check that all seat controls such as seat adjusters, seatback recliner, etc. operate smoothly and that all latches lock securely in any position. For folding-up rear seatbacks, check that the latches lock securely.

Seat belts

Check that the seat belt system such as buckles, retractors and anchors operate properly and smoothly. Make sure the belt webbing is not cut, frayed, worn or damaged.

Accelerator pedal

Check the pedal for smooth operation and uneven pedal effort or catching.

Clutch pedal

Check the pedal for smooth operation.

Brake pedal

Check the pedal for smooth operation and that the pedal has the proper clearance. Check the brake booster function.

Brakes

At a safe place, check that the brakes do not pull to one side when applied.

Parking brake

Check that the lever has the proper travel and that, on a safe incline, your vehicle is held securely with only the parking brake applied.

Automatic transmission "Park" mechanism

Check the lock release button of the selector lever for proper and smooth operation. On a safe incline, check that your vehicle is held securely with the selector lever in "P" position and all brakes released.

IN THE ENGINE COMPARTMENT

Items listed below should be checked from time to time, e.g. each time when refueling.

Washer fluid

Make sure there is sufficient fluid in the tank. See Section 7-3 for additional information.

Engine coolant level

Make sure the coolant level is between the "FULL" and "LOW" lines on the see-through reservoir when the engine is cold. See Section 7-2 for additional information.

Battery electrolyte level

Make sure the electrolyte level of all battery cells is between upper and lower level lines on the case. Add only distilled water when replenishing. See Section 7-3 for additional information.

Brake fluid level

Make sure the brake fluid level is correct. See Section 7-2 for additional information.

Engine oil level

Check the level on the dipstick with the engine turned off and the vehicle parked on a level spot. See Section 7-2 for additional information.

Power steering fluid level

Check the level through the reservoir. The level should be in the "HOT" or "COLD" range depending on the fluid temperature. See Section 7-2 for additional information.

Exhaust system

If you notice any change in the sound of the exhaust or smell exhaust fumes, have the cause located and corrected immediately. (See engine exhaust cautions in Section 2.)

Does your vehicle need repairing?

Be on the alert for changes in performance, sounds, and visual tip-offs that indicate service is needed. Some important clues are as follows:

- Engine missing, stumbling, or pinging
- Appreciable loss of power
- Strange engine noises
- A leak under the vehicle (however, water dripping from the air conditioning after use is normal.)
- Change in exhaust sound (This may indicate a dangerous carbon monoxide leak. Drive with the windows open and have the exhaust system checked immediately.)
- Flat-looking tire; excessive tire squeal when cornering; uneven tire wear
- Vehicle pulls to one side when driving straight on a level road
- Strange noises related to suspension movement
- Loss of brake effectiveness; spongy feeling brake or clutch pedal; pedal almost touches floor; vehicle pulls to one side when braking
- Engine coolant temperature continually higher than normal

If you notice any of these clues, take your vehicle to your Toyota dealer as soon as possible. It probably needs adjustment or repair.

⚠ CAUTION

Do not continue driving with the vehicle unchecked. It could result in serious vehicle damage and possibly personal injury.

SECTION 7-1

DO-IT-YOURSELF MAINTENANCE

Introduction

Engine compartment overview 200
Fuse locations 201
Do-it-yourself service precautions 202
Parts and tools 203

Engine compartment overview

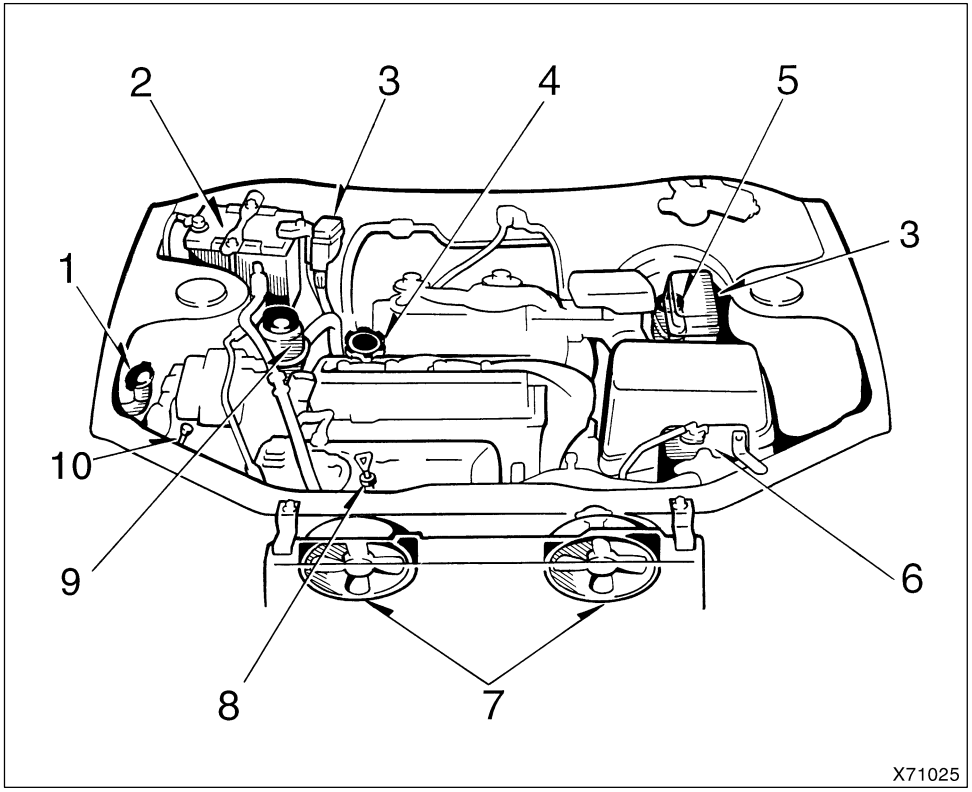

1. Windshield and rear window washer fluid tank
2. Battery
3. Fuse blocks
4. Engine oil filler cap
5. Brake fluid reservoir
6. Engine coolant reservoir
7. Electric cooling fans
8. Engine oil level dipstick
9. Power steering fluid reservoir
10. Windshield and rear window washer fluid level dipstick

Fuse locations

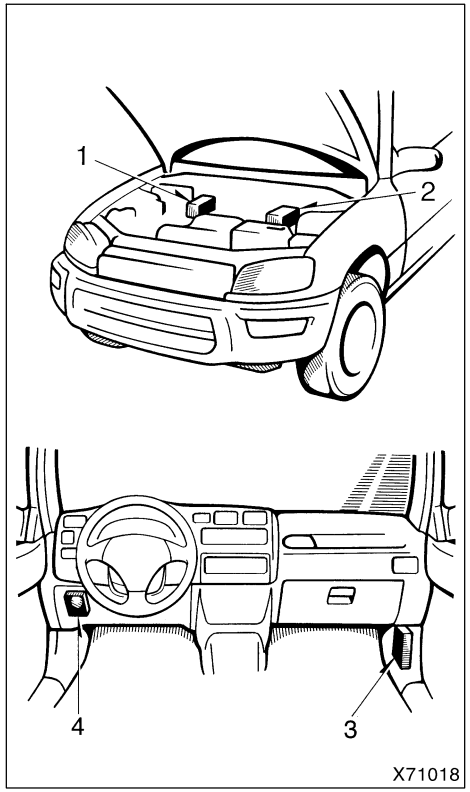

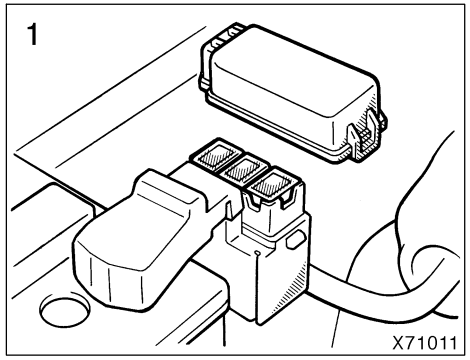

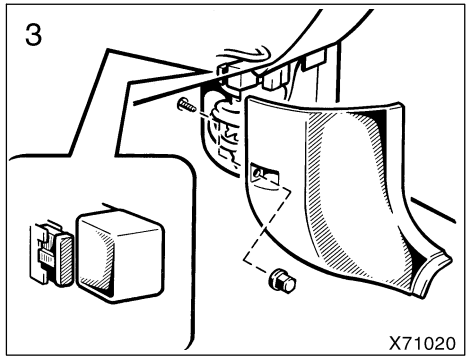

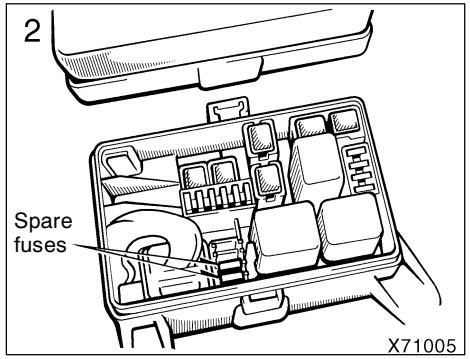

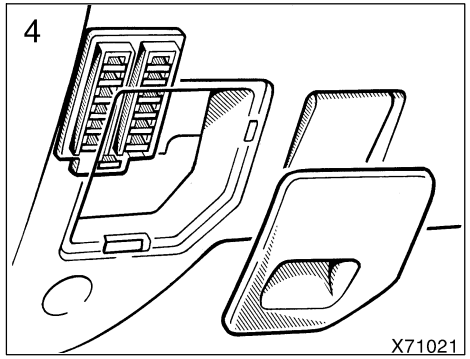

Do-it-yourself service precautions

If you perform maintenance by yourself, be sure to follow the correct procedure given in this section.

You should be aware that improper or incomplete servicing may result in operating problems.

Performing do-it-yourself maintenance during the warranty period may affect your warranty coverage. Read the separate Toyota Warranty statement for details and suggestions.

This section gives instructions only for those items that are relatively easy for an owner to perform. As explained in Section 6, there are still a number of items that must be done by a qualified technician with special tools.

For information on tools and parts for do-it-yourself maintenance, see "Parts and tools".

Utmost care should be taken when working on your vehicle to prevent accidental injury. Here are a few precautions that you should be especially careful to observe:

⚠ CAUTION

- When the engine is running, keep hands, clothing, and tools away from the moving fan and engine drive belts. (Removing rings, watches, and ties is advisable.)
- Right after driving, the engine compartment—the engine, radiator, exhaust manifold, power steering fluid reservoir and spark plug boots, etc.—will be hot. So be careful not to touch them. Oil, fluids and spark plugs may also be hot.
- If the engine is hot, do not remove the radiator cap or loosen the drain plugs to prevent burning yourself.
- Do not smoke, cause sparks or allow open flames around fuel or the battery. Their fumes are flammable.
- Be extremely cautious when working on the battery. It contains poisonous and corrosive sulfuric acid.
- Do not get under your vehicle with just the body jack supporting it. Always use automotive jack stands or other solid supports.
- Be sure that the ignition is off if you work near the electric cooling fans or radiator grille. With the ignition on, the electric cooling fans will automatically start to run if the engine coolant temperature is high and/or the air conditioning is on.
- Use eye protection whenever you work on or under your vehicle where you may be exposed to flying or falling material, fluid spray, etc.
- Used engine oil contains potentially harmful contaminants which may cause skin disorders such as inflammation or skin cancer, so care should be taken to avoid prolonged and repeated contact with it. To remove used engine oil from your skin, wash thoroughly with soap and water.
- Do not leave used oil within the reach of children.

- Dispose of used oil and filter only in a safe and acceptable manner. Do not dispose of used oil and filter in household trash, in sewers or onto the ground. Call your dealer or a service station for information concerning recycling or disposal.

NOTICE

- Remember that battery and ignition cable carry high currents or voltages. Be careful of accidentally causing a short circuit.
- Add only demineralized or distilled water to fill the radiator. And if you spill some of the coolant, be sure to wash it off with water to prevent it from damaging the parts or paint.
- Do not allow dirt or anything else to fall through the spark plug holes.
- Do not pry the outer electrode of a spark plug against the center electrode.
- Use only spark plugs of the specified type. Using other types will cause engine damage, loss of performance or radio noise.
- Do not reuse platinum-tipped spark plugs by cleaning or regapping.
- Do not overfill automatic transmission fluid and transfer oil, or the transmission and transfer could be damaged.
- Do not drive with the air cleaner filter removed, or excessive engine wear could result. Also backfiring could cause a fire in the engine compartment.
- Be careful not to scratch the glass surface with the wiper frame.
- When closing the engine hood, check to see that you have not forgotten any tools, rags, etc.

Parts and tools

Here is a list of parts and tools you will need on performing do-it-yourself maintenance. Remember all Toyota parts are designed in metric sizes, so your tools must be metric.

Checking the engine oil level

Parts (if level is low):

- Engine oil API grade SJ, "Energy-Conserving" or ILSAC multigrade having viscosity proper for your climate

Tools:

- Rag or paper towel
- Funnel (only for adding oil)

Checking the engine coolant level

Parts (if level is low):

- "TOYOTA Long Life Coolant" or equivalent
  See Section 7-2 for details about coolant type selection.
- Demineralized or distilled water

Tools:

- Funnel (only for adding coolant)

Checking brake fluid

Parts (if level is low):

- SAE J1703 or FMVSS No.116 DOT 3 brake fluid

Tools:

- Rag or paper towel
- Funnel (only for adding fluid)

Checking power steering fluid

Parts (if level is low):

- Automatic transmission fluid DEXRON®II or III

Tools:

- Rag or paper towel
- Funnel (only for adding fluid)

Checking battery condition

Tools:

- Warm water
- Baking soda
- Grease
- Conventional wrench (for terminal clamp bolts)

Checking and replacing fuses

Parts (if replacement is necessary):

- Fuse with same amperage rating as original

Tools:

- Screwdriver (for driver's side instrument lower panel nut)
- Conventional wrench (for passenger's side kick panel nut)

Adding washer fluid

Parts:

- Water
- Washer fluid containing antifreeze (for winter use)

Tools:

- Funnel

Replacing light bulbs

Parts:

- Bulb with same number and wattage rating as original (See charts in "Replacing light bulbs" in Section 7-3.)

Tools:

- Screwdriver

SECTION 7-2

DO-IT-YOURSELF MAINTENANCE

Engine and Chassis

Checking the engine oil level 206
Checking the engine coolant level 207
Checking brake fluid 208
Checking power steering fluid 209
Checking tire pressure 210
Checking and replacing tires 211
Rotating tires 212
Installing snow tires and chains 213
Replacing wheels 214
Aluminum wheel precautions 215

Checking the engine oil level

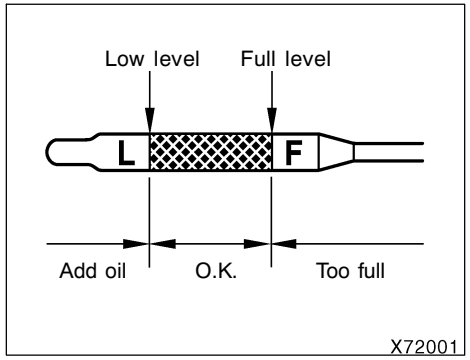

With the engine at operating temperature and turned off, check the oil level on the dipstick.

1. To get a true reading, the vehicle should be on a level spot. After turning off the engine, wait a few minutes for the oil to drain back into the bottom of the engine.
2. Pull out the dipstick, and wipe it clean with a rag.
3. Reinsert the dipstick—push it in as far as it will go, or the reading will not be correct.
4. Pull the dipstick out and look at the oil level on the end.

⚠ CAUTION

Be careful not to touch the hot exhaust manifold.

If the oil level is below or only slightly above the low level, add engine oil of the same type as already in the engine.

Remove the oil filler cap and add engine oil in small quantities at a time, checking the dipstick.

The approximate quantity of oil needed to fill between the low level and the full level on the dipstick is indicated below for reference.

When the level reaches within the correct range, install the filler cap hand-tight.

Oil quantity, L (qt., Imp. qt.):

1.0 (1.1, 0.9)

NOTICE

- Avoid overfilling, or the engine could be damaged.
- Check the oil level on the dipstick once again after adding the oil.

Engine oil selection

Use API grade SJ, "Energy-Conserving" or ILSAC multigrade engine oil.

Recommended viscosity (SAE):

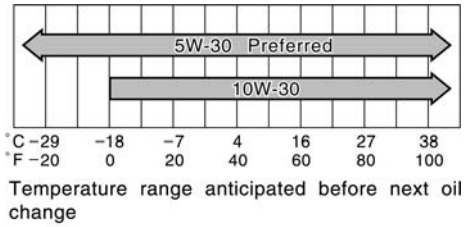

SAE 5W-30 is the best choice for your vehicle, for good fuel economy and good starting in cold weather.

If you use SAE 10W-30 engine oil in extremely low temperatures, the engine may become difficult to start, so SAE 5W-30 engine oil is recommended.

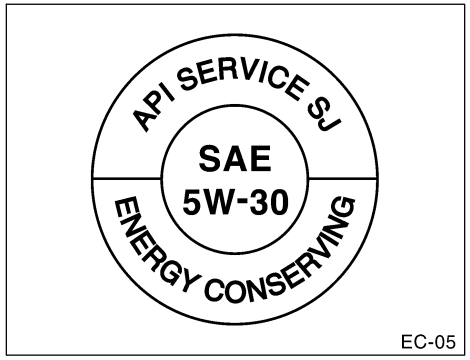

API service symbol

ILSAC certification mark

Oil identification marks

Either or both API registered marks are added to some oil containers to help you select the oil you should use.

The API Service Symbol is located anywhere on the outside of the container.

The top portion of the label shows the oil quality by API (American Petroleum Institute) designations such as SJ. The center portion of the label shows the SAE viscosity grade such as SAE 5W-30. "Energy-Conserving" shown in the lower portion, indicates that the oil has fuel-saving capabilities.

The ILSAC (International Lubricant Standardization and Approval Committee) Certification Mark is displayed on the front of the container.

Checking the engine coolant level

Look at the see-through coolant reservoir when the engine is cold. The coolant level is satisfactory if it is between the "FULL" and "LOW" lines on the reservoir. If the level is low, add ethylene-glycol type coolant for a proper corrosion protection of aluminum components.

The coolant level in the reservoir will vary with engine temperature. However, if the level is on or below the "LOW" line, add coolant. Bring the level up to the "FULL" line.

Always use ethylene-glycol type coolant for a proper corrosion protection of aluminum components. See information in the next column.

If the coolant level drops within a short time after replenishing, there may be a leak in the system. Visually check the radiator, hoses, radiator cap and drain cock and water pump.

If you can find no leak, have your Toyota dealer test the cap pressure and check for leaks in the cooling system.

⚠ CAUTION

To prevent burning yourself, do not remove the radiator cap when the engine is hot.

Coolant type selection

Use of improper coolants may damage your engine cooling system. Your coolant must contain ethylene-glycol type coolant for a proper corrosion protection of your engine that contains aluminum components. Use "TOYOTA Long Life Coolant" or equivalent.

In addition to preventing freezing and subsequent damage to the engine, this type of coolant will also prevent corrosion. Further supplemental inhibitors or additives are neither needed nor recommended.

Read the coolant container for information on freeze protection. Follow the manufacturer's directions for how much to mix with plain water (preferably demineralized water or distilled water). The total capacity of the cooling system is given in Section 8.

We recommend to use 50% solution for your Toyota, to provide protection down to about -35°C (-31°F). When it is extremely cold, to provide protection down to about -50°C (-58°F), 60% solution is recommended. Do not use more than 70% solution for better coolant performance.

NOTICE

Do not use alcohol type antifreeze or plain water alone.

Checking brake fluid

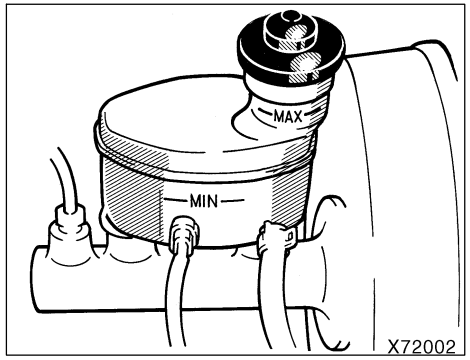

To check the fluid level, simply look at the see-through reservoir. The level should be between the "MAX" and "MIN" lines on the reservoir.

It is normal for the brake fluid level to go down slightly as the brake pads wear. So be sure to keep the reservoir filled.

If the reservoir needs frequent refilling, it may indicate a serious mechanical problem.

If the level is low, add SAE J1703 or FMVSS No.116 DOT 3 brake fluid to the brake reservoir.

Remove and replace the reservoir cap by hand. Fill the brake fluid to the dotted line. This brings the fluid to the correct level when you put the cap back on.

Use only newly opened brake fluid. Once opened, brake fluid absorbs moisture from the air, and excess moisture can cause a dangerous loss of braking.

⚠ CAUTION

Take care when filling the reservoir because brake fluid can harm your eyes and damage painted surfaces. If fluid gets in your eyes, flush your eyes with clean water.

NOTICE

If you spill the fluid, be sure to wash it off with water to prevent it from damaging the parts or paint.

Checking power steering fluid

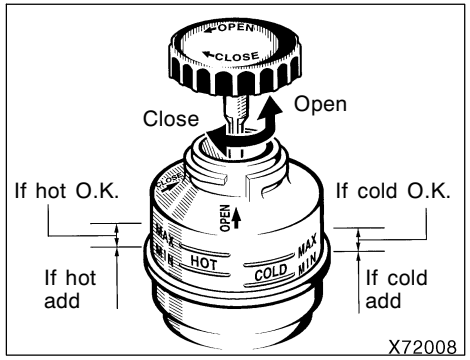

Check the fluid level through the reservoir. If necessary, add automatic transmission fluid DEXRON®II or III.

If the vehicle has been driven around 80 km/h (50 mph) for 20 minutes (a little more in frigid temperatures), the fluid is hot (60°C—80°C or 140°F—175°F). You may also check the level when the fluid is cold (about room temperature, 10°C—30°C or 50°F—85°F) if the engine has not been run for about five hours.

Clean all dirt from outside of the reservoir tank and look at the fluid level. If the fluid is cold, the level should be in the ”COLD” range. Similarly, if it is hot, the fluid level should be in the ”HOT” range. If the level is at the low side of either range, add automatic transmission fluid DEXRON®II or III to bring the level within the range.

To remove the reservoir cap, turn it counterclockwise and lift up. To reinstall it, turn it clockwise. After replacing the reservoir cap, visually check the steering box case, vane pump and hose connections for leaks or damage.

⚠ CAUTION

The reservoir tank may be hot so be careful not to burn yourself.

NOTICE

Avoid overfilling, or the power steering could be damaged.

Checking tire pressure

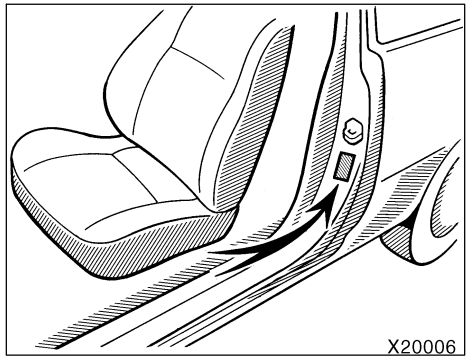

2-door hardtop and soft-top

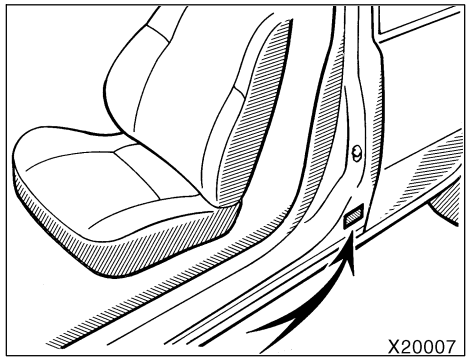

4-door hardtop

Keep your tire pressures at the proper level.

The recommended cold tire pressures, tire size and the vehicle capacity weight are given in Section 8. They are also on the tire pressure label as shown.

You should check the tire pressures every two weeks, or at least once a month. And do not forget the spare!

Incorrect tire pressure can reduce tire life and make your vehicle less safe to drive.

Low tire pressure results in excessive wear, poor handling, reduced fuel economy, and the possibility of blowouts from overheated tires. Also, low tire pressure can cause poor sealing of the tire bead. If the tire pressure is excessively low, there is the possibility of wheel deformation and/or tire separation.

High tire pressure produces a harsh ride, handling problems, excessive wear at the center of the tire tread, and a greater possibility of tire damage from road hazards.

If a tire frequently needs refilling, have it checked by your Toyota dealer.

The following instructions for checking tire pressure should be observed:

- The pressure should be checked only when the tires are cold. If your vehicle has been parked for at least 3 hours and has not been driven for more than 1.5 km or 1 mile since, you will get an accurate cold tire pressure reading.
- Always use a tire pressure gauge. The appearance of a tire can be misleading. Besides, tire pressures that are even just a few pounds off can degrade handling and ride.
- Take special care when adding air to the compact spare tire. The smaller tire size can gain pressure very quickly. Add compressed air in small quantities and check the pressure often until it reaches the specified pressure.
- Do not bleed or reduce tire pressure after driving. It is normal for the tire pressure to be higher after driving.
- Never exceed the vehicle capacity weight. The passenger and luggage weight should be located so that the vehicle is balanced.

- Be sure to reinstall the tire inflation valve caps. Without the valve caps, dirt or moisture could get into the valve core and cause air leakage. If the caps have been lost, have new ones put on as soon as possible.

Checking and replacing tires

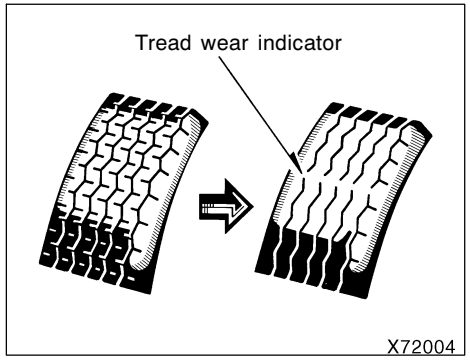

CHECKING YOUR TIRES

Check the tire tread for the tread wear indicators. If the indicators show, replace the tires.

The tires on your Toyota have built-in tread wear indicators to help you know when the tires need replacement. When the tread depth wears to 1.6 mm (0.06 in.) or less, the indicators will appear. If you can see the indicators in two or more adjacent grooves, the tire should be replaced. The lower the tread, the higher the risk of skidding.

The effectiveness of snow tires is lost if the tread wears down below 4 mm (0.16 in.).

Check the tires regularly for damage such as cuts, splits and cracks. If any damage is found, consult with a technician and have the tire repaired or replaced.

Even if the damage does not appear serious, a qualified technician should examine the damage. Objects which have penetrated the tire may have caused internal damage.

Any tires which are over 6 years old must be checked by a qualified technician even if damage is not obvious.

Tires deteriorate with age even if they have never or seldom been used.

This also applies to the spare tire and tires stored for future use.

REPLACING YOUR TIRES

When replacing a tire, use only the same size and construction as originally installed and with the same or greater load capacity.

Using any other size or type of tire may seriously affect handling, ride, speedometer/odometer calibration, ground clearance, and clearance between the body and tires or snow chains.

⚠ CAUTION

- Do not mix radial, bias belted, or bias-ply tires on your vehicle. It can cause dangerous handling characteristics, resulting in loss of control.
- Do not use tire or wheels other than the manufacturer's recommended size.

NOTICE

Do not use tires of different brands, sizes and constructions. This may damage the drive system.

Never use second-hand tires on your Toyota.

Using tires whose previous history is unknown is a risk.

Toyota recommends all four tires, or at least both front or rear tires be replaced as a set.

See "If you have a flat tire" in Section 4 for tire change procedure.

When a tire is replaced, the wheel should always be balanced.

An unbalanced wheel may affect vehicle handling and tire life. Wheels can get out of balance with regular use and should therefore be balanced occasionally.

When replacing a tubeless tire, the air valve should also be replaced with a new one.

Rotating tires

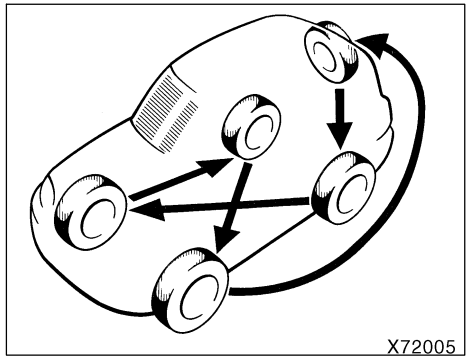

With a spare tire of the same wheel type as the installed tires

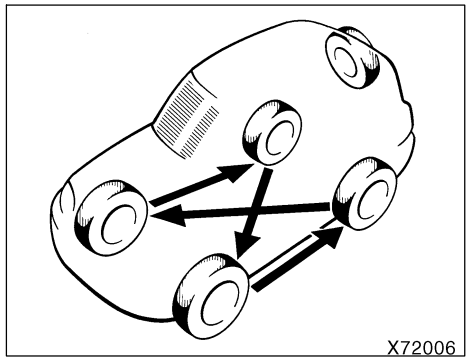

With a spare tire of different wheel type from the installed tires

To equalize tire wear and help extend tire life, Toyota recommends that you rotate your tires approximately every 12000 km (7500 miles). However, the most appropriate timing for tire rotation may vary according to your driving habits and road surface conditions.

See "If you have a flat tire" in Section 4 for tire change procedure.

When rotating tires, check for uneven wear and damage. Abnormal wear is usually caused by incorrect tire pressure, improper wheel alignment, out-of-balance wheels, or severe braking.

Installing snow tires and chains

WHEN TO USE SNOW TIRES OR CHAINS

Snow tires or chains are recommended when driving on snow or ice.

On wet or dry roads, conventional tires provide better traction than snow tires.

SNOW TIRE SELECTION

If you need snow tires, select tires of the same size, construction and load capacity as the original tires on your Toyota. Make sure all the snow tires are the same brand.

Do not install studded tires without first checking local regulations for possible restrictions.

NOTICE

Do not use tires of different brands, sizes and constructions. This may damage the drive system.

SNOW TIRE INSTALLATION

Snow tires should be installed on all wheels.

Installing snow tires on the front wheels only can lead to an excessive difference in road grip capability between the front and rear tires which could cause loss of vehicle control.

When storing removed tires, you should store them in a cool dry place.

Mark the direction of rotation and be sure to install them in the same direction when replacing.

⚠ CAUTION

- Do not drive with the snow tires incorrectly inflated.
- Never drive over 120 km/h (75 mph) with any type of snow tires.

TIRE CHAIN SELECTION

Use tire chains of the correct size.

Two-wheel drive models only—

Use only genuine Toyota tire chains or equivalent for use on the RAV4.

NOTICE

If the wrong combination of tire and chain is used, the chains could damage the vehicle body.

* RAV4 genuine tire chains (Part No. 08329-42801)

Laws about using tire chains vary according to locality and type of road, so always check your local laws before you install tire chains.

CHAIN INSTALLATION

Four-wheel drive models:

Install the chains on the rear tires as tightly as possible. Do not use tire chains on the front tires. Retighten chains after driving 0.5—1.0 km (1/4—1/2 mile).

Two-wheel drive models:

Install the chains on the front tires as tightly as possible. Do not use tire chains on the rear tires. Retighten chains after driving 0.5—1.0 km (1/4—1/2 mile).

When installing chains on your tires, carefully follow the instructions of the chain manufacturer.

If wheel covers are used, they will be scratched by the chain band, so remove the covers before putting on the chains.

⚠ CAUTION

- Do not exceed 50 km/h (30 mph) or the chain manufacturer's recommended speed limit, whichever is lower.
- Drive carefully avoiding bumps, holes, and sharp turns, which may cause the vehicle to bounce.
- Avoid sharp turns or locked-wheel braking, as use of chains may adversely affect vehicle handling.

Replacing wheels

WHEN TO REPLACE YOUR WHEELS

If you have wheel damage such as bending, cracks or heavy corrosion, the wheel should be replaced.

If you fail to replace damaged wheels, the tire may slip off the wheel or cause loss of handling control.

WHEEL SELECTION

When replacing wheels, care should be taken to ensure that the wheels are replaced by ones with the same load capacity, diameter, rim width, and offset.

Correct replacement wheels are available at your Toyota dealer.

A wheel of a different brand, size and type may adversely affect handling, wheel and bearing life, brake cooling, speedometer/odometer calibration, stopping ability, headlight aim, bumper height, vehicle ground clearance, and tire or snow chain clearance to the body and chassis.

Replacement with used wheels is not recommended as they may have been subjected to rough treatment or high mileage and could fail without warning. Also, bent wheels which have been straightened may have structural damage and therefore should not be used. Never use an inner tube in a leaking wheel which is designed for a tubeless tire.

NOTICE
Do not use wheels of different brands, sizes and types. This may damage the drive system.

Aluminum wheel precautions

- After driving your vehicle the first 1600 km (1000 miles), check that the wheel nuts are tight.
- If you have rotated, repaired, or changed your tires, check that the wheel nuts are still tight after driving 1600 km (1000 miles).
- When using tire chains, be careful not to damage the aluminum wheels.
- Use only the Toyota wheel nuts and wrench designed for your aluminum wheels.
- When balancing your wheels, use only Toyota balance weights or equivalent and a plastic or rubber hammer.
- As with any wheel, periodically check your aluminum wheels for damage. If damaged, replace immediately.

SECTION 7-3

DO-IT-YOURSELF MAINTENANCE

Electrical components

Checking battery condition 218
Battery recharging precautions 219
Checking and replacing fuses 220
Adding washer fluid 221
Replacing light bulbs 222

Checking battery condition——Precautions

⚠ CAUTION

BATTERY PRECAUTIONS

The battery produces flammable and explosive hydrogen gas.

- Do not cause a spark from the battery with tools.
- Do not smoke or light a match near the battery.

The electrolyte contains poisonous and corrosive sulfuric acid.

- Avoid contact with eyes, skin or clothes.
- Never ingest electrolyte.
- Wear protective safety glasses when working near the battery.
- Keep children away from the battery.

EMERGENCY MEASURES

- If electrolyte gets in your eyes, flush your eyes with clean water immediately and get immediate medical attention. If possible, continue to apply water with a sponge or cloth while en route to the medical office.
- If electrolyte gets on your skin, thoroughly wash the contact area. If you feel pain or burning, get medical attention immediately.
- If electrolyte gets on your clothes, there is a possibility of its soaking through to your skin, so immediately take off the exposed clothing and follow the procedure above, if necessary.
- If you accidentally swallow electrolyte, drink a large quantity of water or milk. Follow with milk of magnesia, beaten raw egg or vegetable oil. Then go immediately for emergency help.

——Checking battery exterior

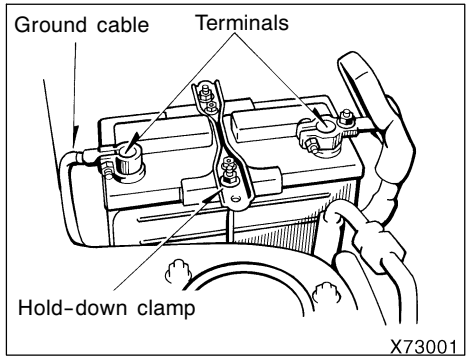

Check the battery for corroded or loose terminal connections, cracks, or loose hold-down clamp.

a. If the battery is corroded, wash it off with a solution of warm water and baking soda. Coat the outside of the terminals with grease to prevent further corrosion.

b. If the terminal connections are loose, tighten their clamp nuts—but do not overtighten.

c. Tighten the hold-down clamp only enough to keep the battery firmly in place. Overtightening may damage the battery case.

NOTICE

- Be sure the engine and all accessories are off before performing maintenance.
- When checking the battery, remove the ground cable from the negative terminal (”–” mark) first and reinstall it last.
- Be careful not to cause a short circuit with tools.
- Take care no solution gets into the battery when washing it.

—Checking battery fluid

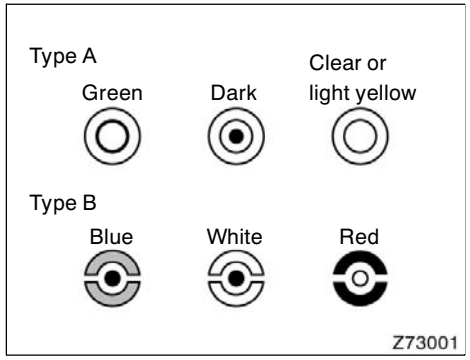

CHECKING BY HYDROMETER

Check the battery condition by the hydrometer color.

Hydrometer color		Condition
Type A	Type B	
GREEN	BLUE	Good
DARK	WHITE	Charging necessary. Have battery checked by your Toyota dealer.
CLEAR or LIGHT YELLOW	RED	Have battery checked by your Toyota dealer.

Battery recharging precautions

During recharging, the battery is producing hydrogen gas.

Therefore, before recharging:

1. If recharging with the battery installed on the vehicle, be sure to disconnect the ground cable.
2. Be sure the power switch on the recharger is off when connecting the charger cables to the battery and when disconnecting them.

⚠ CAUTION

- Always charge the battery in an unconfined area. Do not charge the battery in a garage or closed room where there is not sufficient ventilation.
- Only do a slow charge (5 A or less). Charging at a quicker rate is dangerous. The battery may explode, causing personal injuries.

NOTICE

Never recharge the battery while the engine is running. Also, be sure all accessories are turned off.

Checking and replacing fuses

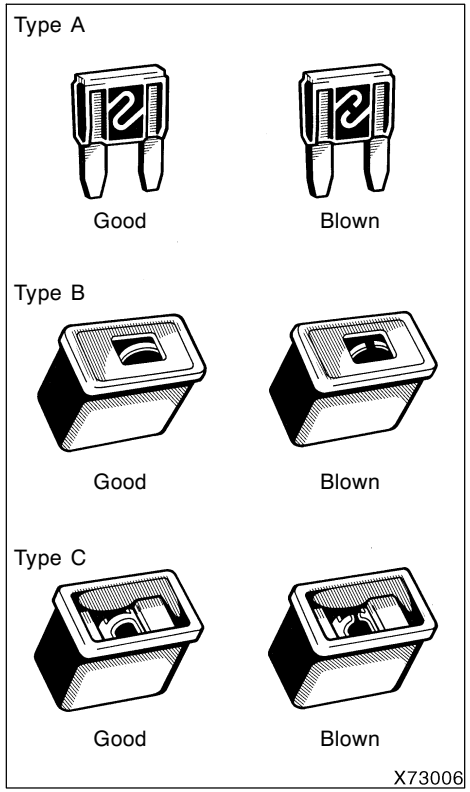

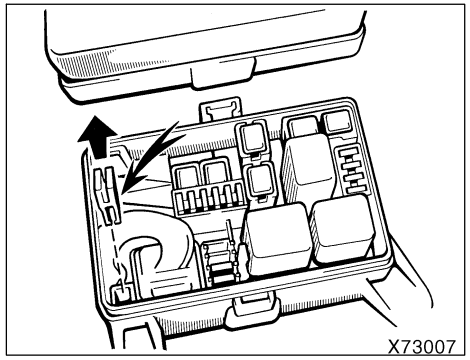

If the headlights or other electrical components do not work, check the fuses. If any of the fuses are blown, they must be replaced.

See "Fuse locations" in Section 7-1 for locations of the fuses.

Turn the ignition switch and inoperative component off. Pull a suspected fuse straight out and check it.

Determine which fuse may be causing the problem. The lid of the fuse box shows the name of the circuit for each fuse. See Section 8 of this manual for the functions controlled by each circuit.

Type A fuses can be pulled out by using the pull-out tool. The location of the pull-out tool is shown in the illustration.

If you are not sure whether the fuse has blown, try replacing the suspected fuse with one that you know is good.

If the fuse has blown, push a new fuse into the clip.

Only install a fuse with the amperage rating designated on the fuse box lid.

If you do not have a spare fuse, in an emergency you can pull out the "CIG", "DOME" or "A/C" fuse, which may be dispensable for normal driving, and use it if its amperage rating is the same.

If you cannot use one of the same amperage, use one that is lower, but as close as possible to the rating. If the amperage is lower than that specified, the fuse might blow out again but this does not indicate anything wrong. Be sure to get the correct fuse as soon as possible and return the substitute to its original clip.

It is a good idea to purchase a set of spare fuses and keep them in your vehicle for emergencies.

If the new fuse immediately blows out, there is a problem with the electrical system. Have your Toyota dealer correct it as soon as possible.

⚠ CAUTION

Never use a fuse with a higher amperage rating, or any other object, in place of a fuse. This may cause extensive damage and possibly a fire.

Adding washer fluid

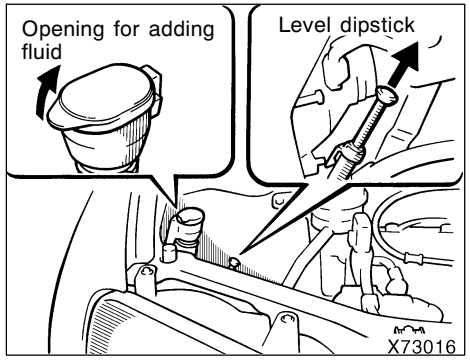

Check the washer fluid level in the reservoir with the dipstick. If the washer fluid level is low, reinsert the dipstick securely and add washer fluid through the opening for adding fluid.

You may use plain water as washer fluid. However, in cold areas where temperatures range below freezing point, use washer fluid containing antifreeze. This product is available at your Toyota dealer and most auto parts stores. Follow the manufacturer's directions for how much to mix with water.

⚠ CAUTION

To prevent burning yourself, do not check the washer fluid level when the engine is hot.

NOTICE

- After checking the washer fluid level, make sure the dipstick is securely reinserted. If it is loose, fluid may leak from the reservoir.
- Do not check the washer fluid level or add washer fluid when the engine is running or when it is hot. If the fluid is spilled over the hot engine, a fire could result.
- If you have added washer fluid until it is close to the top of the opening for adding fluid, do not pull out the dipstick. Otherwise, the fluid will overflow.
- Do not use engine antifreeze or any other substitute because it may damage your vehicle's paint.

Replacing light bulbs—

The following illustrations show how to gain access to the bulbs. When replacing a bulb, make sure the ignition switch and light switch are off. Use bulbs with the wattage ratings given in the table.

⚠ CAUTION

Halogen bulbs have pressurized gas inside and require special handling. They can burst or shatter if scratched or dropped. Hold a bulb only by its plastic or metal case. Do not touch the glass part of a bulb with bare hands.

NOTICE

Only use a bulb of the listed type.

Light bulbs	Bulb No.	W	Type
Headlight			
Inner	HB3	60	B
Outer	HB4	51	A
Parking and front turn signal lights	1157NA	27/8	C
Front side marker lights	217	5	D
Rear side marker lights	194	3.8	D
Rear turn signal lights	7440	21	D
Stop and tail lights	7443	21/5	D
Back-up lights	7440	21	D
License plate light	168	5	D
High mounted stop light			
Hardtop	921	18	D
Soft-top	7440	21	D
Interior light	—	8	E

Light bulbs	Bulb No.	W	Type
Personal light (with moon roof)	—	10	C
Personal lights (without moon roof)	—	8	C

A: HB4 halogen bulbs
B: HB3 halogen bulbs
C: Single end bulbs
D: Wedge base bulbs
E: Double end bulbs

—Headlights

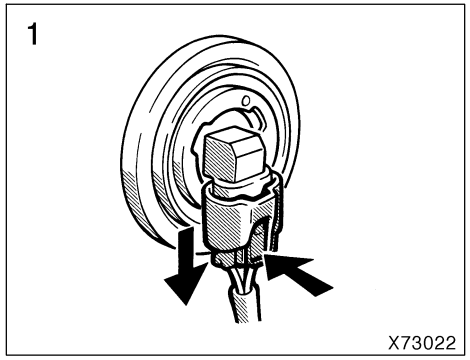

1. Open the hood. Unplug the connector while depressing the lock release.

If the connector is tight, wiggle it.

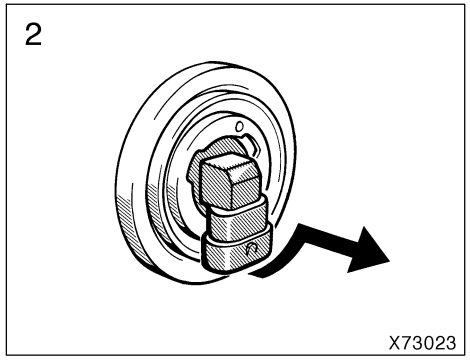

2. Turn the bulb and remove it.

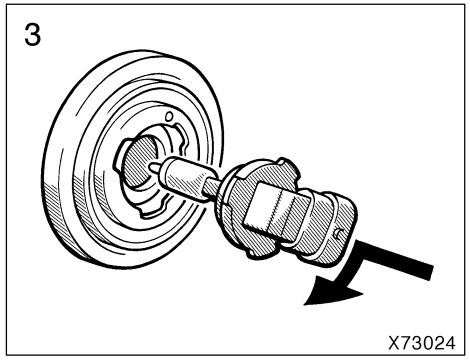

3. Install a new bulb and the connector into the mounting hole.

Aiming is not necessary after replacing the bulb. When aiming adjustment is necessary, contact your Toyota dealer.

—Parking, front turn signal and front side marker lights

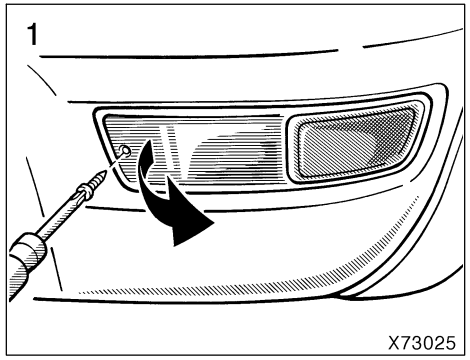

Use a Phillips-head screwdriver.

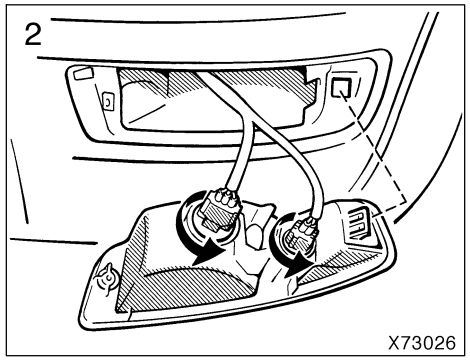

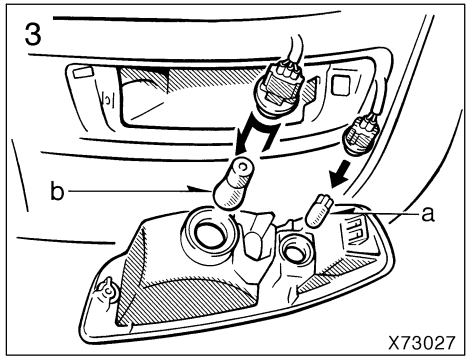

a: Front side marker light
b: Parking and front turn signal light

—Rear side marker lights

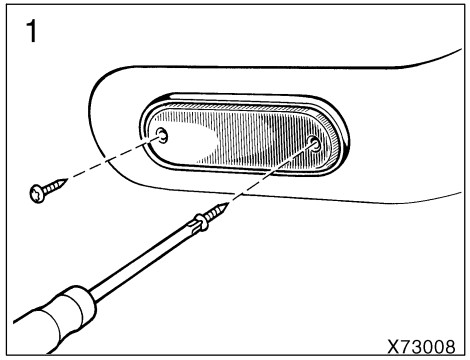

Use a Phillips-head screwdriver.

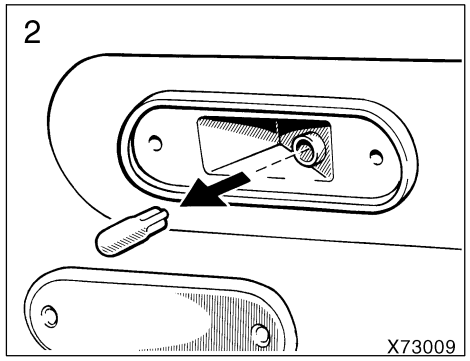

—Rear turn signal, stop and tail, and back-up lights

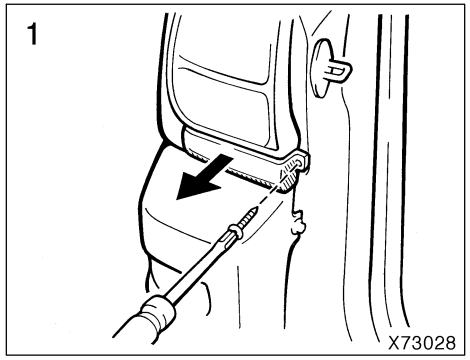

Use a Phillips-head screwdriver.

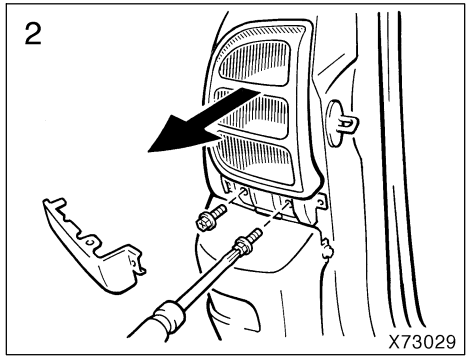

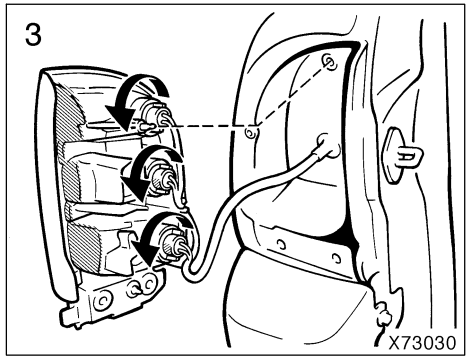

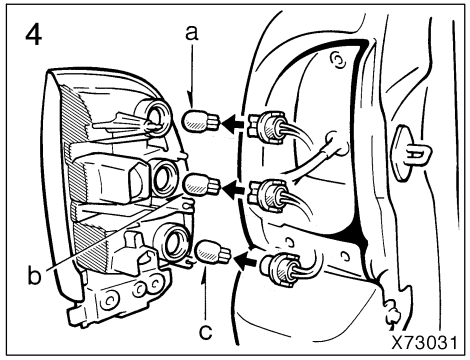

a: Back-up light
b: Rear turn signal light
c: Stop and tail light

—High mounted stoplight (hardtop)

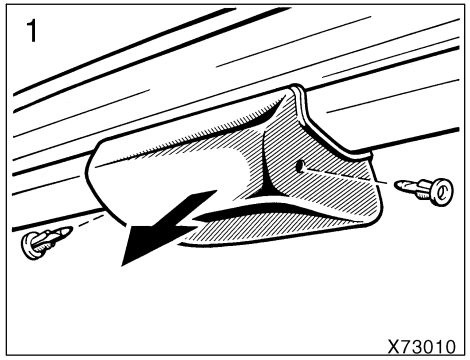

Remove and install the cover clips as shown in the following illustrations.

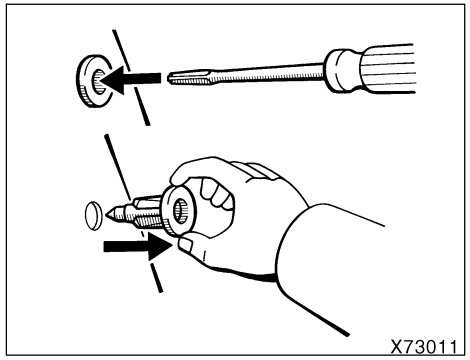

Removing cover clips

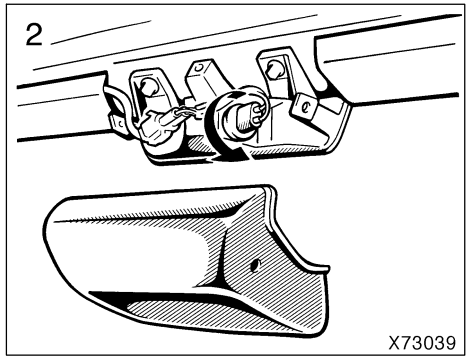

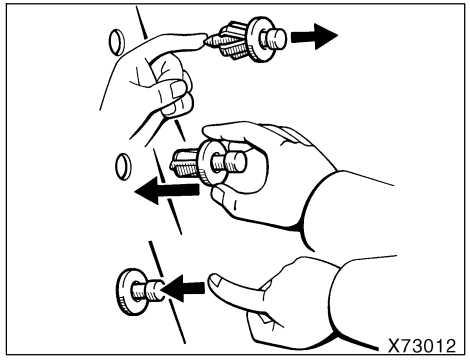

Installing cover clips

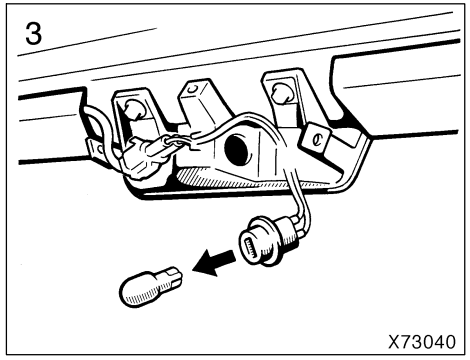

—High mounted stoplight (soft-top)

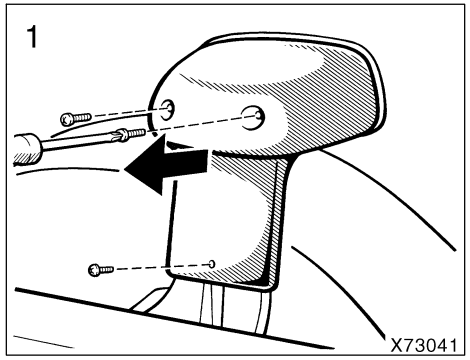

Use the Phillips-head screwdriver.

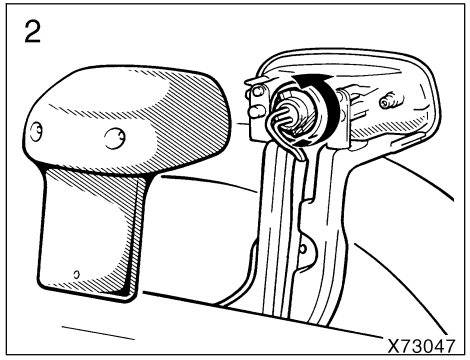

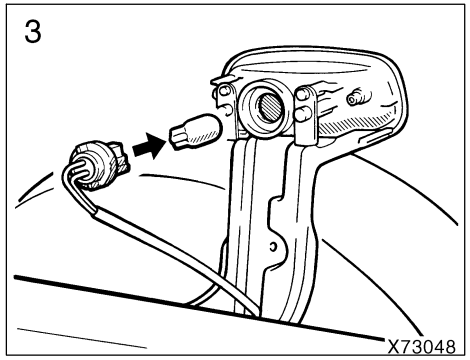

—License plate lights

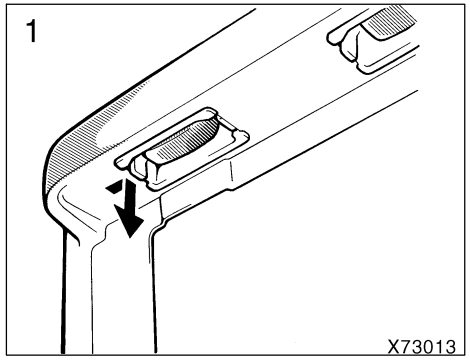

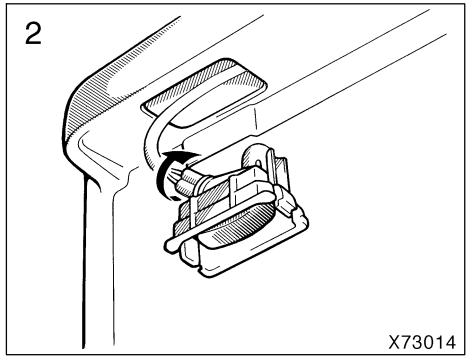

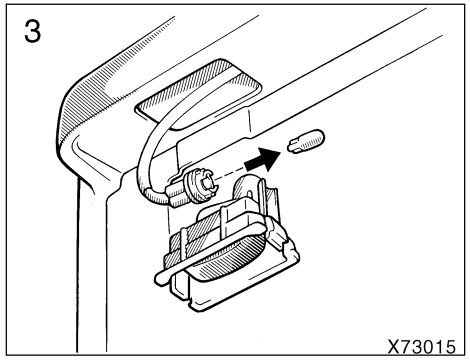
3
X73015

SECTION 8

SPECIFICATIONS

Dimensions and weight 230
Engine 231
Fuel 231
Service specifications 231
Tires 234
Fuses 235

Dimensions and weight

	2-door hardtop		4-door hardtop		Soft-top	
	215/70R16 tires	235/60R16 tires	215/70R16 tires	235/60R16 tires	215/70R16 tires	235/60R16 tires
Overall length mm (in.)	3750 (147.6)	3765 (148.2)	4160 (163.8)	4175 (164.4)	3750 (147.6)	3765 (148.2)
Overall width mm (in.)	1695 (66.7)	1760 (69.3)	1695 (66.7)	1760 (69.3)	1695 (66.7)	1760 (69.3)
Overall height mm (in.)	1655 (65.2)*1 1645 (64.8)*2	1635 (64.4)	1660 (65.4)*1 1650 (65.0)*2	1640 (64.6)	1660 (65.4)*1 1650 (65.0)*2	1640 (64.6)
Wheelbase mm (in.)	2200 (86.6)	2200 (86.6)	2410 (94.9)	2410 (94.9)	2200 (86.6)	2200 (86.6)
Front tread mm (in.)	1460 (57.5)	1480 (58.3)	1460 (57.5)	1480 (58.3)	1460 (57.5)	1480 (58.3)
Rear tread mm (in.)	1465 (57.7)*3 1470 (57.9)*4	1490 (58.7)	1465 (57.7)*3 1470 (57.9)*4	1490 (58.7)	1465 (57.7)*3 1470 (57.9)*4	1490 (58.7)
Vehicle capacity weight (occupants + luggage) kg(lb.)	273 (601)*3 333 (734)*4	273 (601)	341 (751)*3 351 (773)*4	341 (751)	273 (601)*3 333 (734)*4	273 (601)

*1: Unladen vehicle (four-wheel drive models)

*2: Unladen vehicle (two-wheel drive models)

*3: Four-wheel drive models

*4: Two-wheel drive models

Engine

Model:
3S-FE

Type:
4 cylinder in line, 4 cycle, gasoline

Bore and stroke, mm (in.):
86.0 □ 86.0 (3.39 □ 3.39)

Displacement, cm^3 (cu. in.):
1998 (121.9)

Fuel

Fuel type:
Unleaded gasoline, Octane Rating 87 (Research Octane Number 91) or higher

Fuel tank capacity, L (gal., Imp. gal.):
58 (15.3, 12.8)

Service specifications

ENGINE

Valve clearance (engine cold), mm (in.):

Intake	0.19—0.29	(0.007—0.011)
Exhaust	0.28—0.38	(0.011—0.015)

Spark plug type:

DENSO	PK20TR11
NGK	BKR6EKPB11

Spark plug gap, mm (in.):
1.1 (0.043)

Drive belt tension measured with Borroughs drive belt tension gauge No. BT-33-73F (used belt), lbf:

Generator belt	65 ± 20
Air conditioning compressor belt	100 ± 20
Power steering pump belt	80 ± 20

ENGINE LUBRICATION

Oil capacity (drain and refill), L (qt., Imp. qt.):
With filter
4.1 (4.3, 3.6)
Without filter
3.9 (4.1, 3.4)

Oil grade:
API grade SJ, "Energy-Conserving" or ILSAC multigrade engine oil is recommended.

Recommended oil viscosity (SAE):

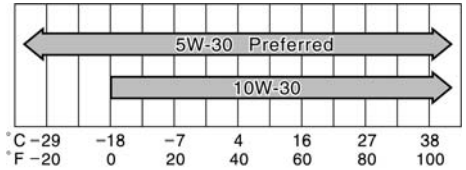

Temperature range anticipated before next oil change

OIL05U

COOLING SYSTEM

Total capacity, L (qt., Imp. qt.):
Manual transmission
8.0 (8.5, 7.0)
Automatic transmission
7.7 (8.1, 6.8)

Coolant type:

"TOYOTA Long Life Coolant" or equivalent

With ethylene-glycol type coolant for a proper corrosion protection of aluminum components

Do not use alcohol type antifreeze or plain water alone.

BATTERY

Open voltage* at 20 °C (68 °F):

12.6—12.8 V	Fully charged
12.2—12.4 V	Half charged
11.8—12.0 V	Discharged

*: Voltage that is checked 20 minutes after the key is removed with all the lights turned off

Charging rates:
5 A max.

CLUTCH

Pedal free play, mm (in.):
5—15 (0.2—0.6)

Fluid type:
SAE J1703 or FMVSS No.116 DOT 3

MANUAL TRANSAXLE

Oil capacity, L (qt., Imp. qt.):
Two-wheel drive models
3.9 (4.1, 3.4)
Four-wheel drive models
5.0 (5.3, 4.4)

Oil type:
Two-wheel drive models
Gear oil API GL-4 or GL-5
Four-wheel drive models
Gear oil API GL-5

Recommended oil viscosity:
SAE 75W-90

AUTOMATIC TRANSAXLE

Fluid capacity (drain and refill), L (qt., Imp. qt.):
Up to 3.3 (3.5, 2.9)

Fluid type:
Two-wheel drive models
Automatic transmission fluid D-II or DEXRON®III (DEXRON®II)
Four-wheel drive models
Toyota automatic transaxle fluid type T or T-IV or equivalent

TRANSFER
(four-wheel drive models with an automatic transaxle)

Oil capacity, L (qt., Imp. qt.):
0.7 (0.7, 0.6)

Oil type:
Gear oil API GL-5

Recommended oil viscosity:
SAE 75W-90

REAR DIFFERENTIAL
(four-wheel drive models)

Oil capacity, L (qt., Imp. qt.):
0.9 (1.0, 0.8)

Oil type:
Hypoid gear oil API GL-5

Recommended oil viscosity:
Above -18 °C (0 °F)
SAE 90

Below -18 °C (0 °F)
SAE 80W or 80W-90

BRAKES

Minimum pedal clearance when depressed with the pressure of 490 N (50 kgf, 110 lbf) with the engine running, mm (in.):
75 (3.0)

Pedal free play, mm (in.):
1—6 (0.04—0.24)

Pad wear limit, mm (in.):
1.0 (0.04)

Lining wear limit, mm (in.):
1.0 (0.04)

Parking brake adjustment when pulled with the force of 196 N (20 kgf, 44 lbf):
5—8 clicks

Fluid type:
SAE J1703 or FMVSS No.116 DOT 3

STEERING

Wheel freeplay:
Less than 30 mm (1.2 in.)

Power steering fluid type:
Automatic transmission fluid DEXRON®II or III

Tires

Tire size and pressure:

Model	Tire size	Tire pressure kPa (kgf/cm^2 or bar, psi)		Wheel size
		Front	Rear	
2-door hardtop and soft-top	215/70R 16 99S	180 (1.8, 26)	180 (1.8, 26)	16 □ 6J 16 □ 6.5JJ*
	235/60R 16 100H	170 (1.7, 25)	170 (1.7, 25)	16 □ 6.5JJ
4-door hardtop	215/70R 16 99S	190 (1.9, 28)	180 (1.8, 26)	16 □ 6J 16 □ 6.5JJ*
	235/60R 16 100H	170 (1.7, 25)	170 (1.7, 25)	16 □ 6.5JJ

Wheel nut torque, N·m (kgf·m, ft·lbf):

103 (10.5, 76)

*: Vehicles with aluminum wheel

Fuses

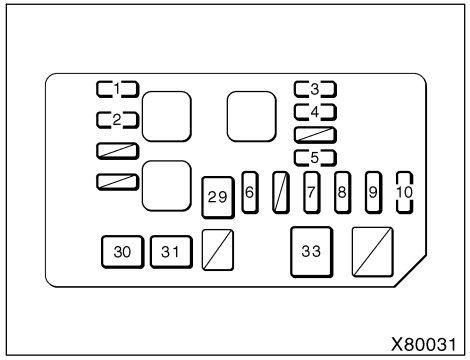

Engine compartment
(without daytime running light system)

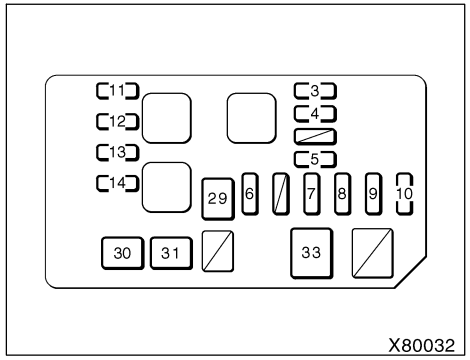

Engine compartment
(with daytime running light system)

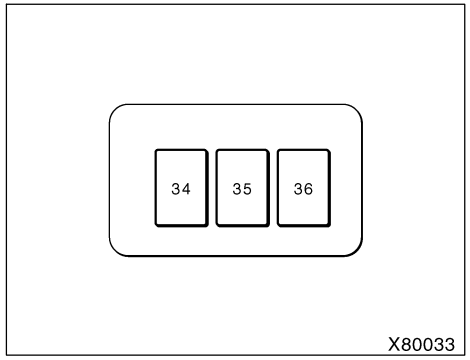

Engine compartment

Fuses (type A)

1. H-LP (RH) 15 A: Right-hand headlight
2. H-LP (LH) 15 A: Left-hand headlight
3. SPARE 10 A: Spare fuse
4. SPARE 15 A: Spare fuse
5. AM2 5 A: Multiport fuel injection system/sequential multiport fuel injection system, SRS airbag system, seat belt pretensioners, starting system, discharge warning light
6. ALT-S 5 A: Charging system
7. HAZ 10 A: Emergency flashers
8. EFI 20 A: Multiport fuel injection system/sequential multiport fuel injection system
9. DOME 15 A: Interior light, personal lights, clock, daytime running light system, gauge and meters, car audio system
10. IGN 20 A: Charging system
11. H-LP RH-H 10 A: Right-hand headlight (high beam)
12. H-LP LH-H 10 A: Left-hand headlight (high beam)
13. H-LP RH-L 10 A: Right-hand headlight (low beam)
14. H-LP LH-L 10 A: Left-hand headlight (low beam)
15. PWR OUTLET 15 A: Power outlet
16. CIG 15 A: Cigarette lighter, clock, car audio system, power rear view mirrors, electronically controlled automatic transmission system
17. SRS-ACC 10 A: SRS airbag system, seat belt pretensioners
18. WIPER 20 A: Windshield wipers and washer, rear window wiper and washer

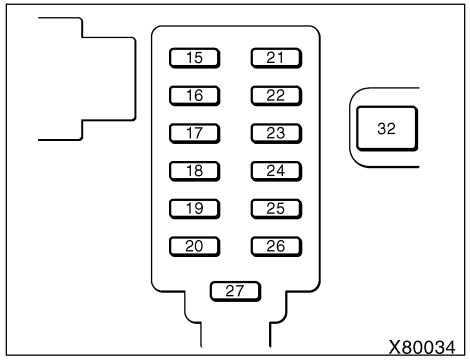

Instrument panel

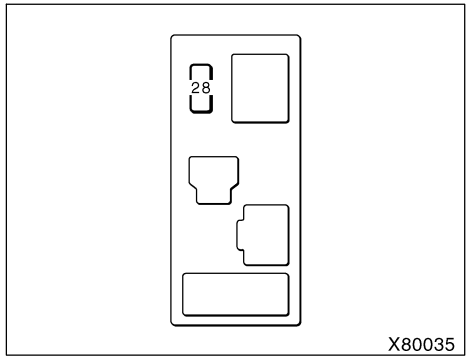

Passenger's side kick panel

19. ECU-IG 10 A: Electronically controlled automatic transmission system, rear window defogger, center differential lock system, electric moon roof, multi-port fuel injection system/sequential multiport fuel injection system, electric cooling fan, anti-lock brake system, cruise control system
20. TURN & GAUGE 10 A: Turn signal lights, gauges and meters, back-up lights, service reminder indicators, air conditioning system, daytime running light system
21. STOP 10 A: stoplights, high mounted stoplight, electronically controlled automatic transmission system, anti-lock brake system
22. TAIL 15 A: Gauges and meters, emergency flashers, cigarette lighter, center differential lock system, clock, rear window defogger, air conditioning system, electronically controlled automatic transmission system, car audio system, tail lights, license plate lights, parking lights, instrument panel light control, side marker lights
23. OBD 10 A: On-board diagnosis system
24. SRS-B 10 A: SRS warning light
25. HORN 10 A: Horn
26. DEFOG 20 A: Rear window defogger
27. AM1 10 A: "CIG", "PWR OUTLET", "SRS-ACC", "WIPER", "ECU-IG" and "TURN & GAUGE" fuses
28. A/C 10 A: Air conditioning system

Fuses (type B)

29. MAIN No.1 40 A: Starting system, "H-LP (RH)", "H-LP (LH)", "H-LP RH-H", "H-LP LH-H", "H-LP RH-L" and "H-LP LH-L" fuses
30. CDS FAN 30 A: Electric cooling fans
31. RDI FAN 30 A: Electric cooling fans
32. PWR 30 A: Power door lock system, electric moon roof, power windows

Fuses (type C)

33. ABS 50 A: Anti-lock brake system
34. MAIN 80 A: ”IGN”, ”HAZ”, ”DOME”, ”ALT-S”, ”MAIN No.1”, ”AM2” and ”EFI” fuses
35. ALT 100 A: ”HTR”, ”ABS”, ”RDI FAN”, ”CDS FAN”, ”CIG”, ”SRS-ACC”, ”WIPER”, ”ECU-IG”, ”TURN & GAUGE”, ”DEFOG”, ”TAIL”, ”STOP”, ”HORN”, ”OBD”, ”SRS-B”, ”PWR OUTLET”, ”PWR” and ”AM1” fuses
36. HTR 50 A: Air conditioning system, ”A/C” fuse

SECTION 9

REPORTING SAFETY DEFECTS FOR U.S. OWNERS AND UNIFORM TIRE QUALITY GRADING

Reporting safety defects for U.S. owners 240
Uniform tire quality grading 240

Reporting safety defects for U.S. owners

If you believe that your vehicle has a defect which could cause a crash or could cause injury or death, you should immediately inform the National Highway Traffic Safety Administration (NHTSA) in addition to notifying Toyota Motor Sales, U.S.A., Inc.
(Toll-free: 1-800-331-4331).

If NHTSA receives similar complaints, it may open an investigation, and if it finds that a safety defect exists in a group of vehicles, it may order a recall and remedy campaign. However, NHTSA cannot become involved in individual problems between you, your dealer, or Toyota Motor Sales, U.S.A., Inc.

To contact NHTSA, you may either call the Auto Safety Hotline toll-free at 1-800-424-9393 (or 366-0123 in Washington, D.C. area) or write to: NHTSA, U.S. Department of Transportation, Washington, D.C. 20590. You can also obtain other information about motor vehicle safety from the Hotline.

Uniform tire quality grading

This information has been prepared in accordance with regulations issued by the National Highway Traffic Safety Administration of the U.S. Department of Transportation. It provides the purchasers and/or prospective purchasers of Toyota vehicles with information on uniform tire quality grading.

Your Toyota dealer will help answer any questions you may have as you read this information.

DOT quality grades—All passenger car tires must conform to Federal Safety Requirements in addition to these grades. Quality grades can be found where applicable on the tire sidewall between tread shoulder and maximum section width. For example: Treadwear 200 Traction AA Temperature A

Treadwear—The treadwear grade is a comparative rating based on the wear rate of the tire when tested under controlled conditions on a specified government test course. For example, a tire graded 150 would wear one and a half (1-1/2) times as well on the government course as a tire graded 100. The relative performance of tires depends upon the actual conditions of their use, however, and may depart significantly from the norm due to variations in driving habits, service practices and differences in road characteristics and climate.

Traction AA, A, B, C—The traction grades, from highest to lowest, are AA, A, B, and C, and they represent the tire's ability to stop on wet pavement as measured under controlled conditions on specified government test surfaces of asphalt and concrete. A tire marked C may have poor traction performance.

Warning: The traction grade assigned to this tire is based on braking (straight ahead) traction tests and does not include cornering (turning) traction.

Temperature A, B, C—The temperature grades are A (the highest), B, and C, representing the tire's resistance to the generation of heat and its ability to dissipate heat when tested under controlled conditions on a specified indoor laboratory test wheel. Sustained high temperature can cause the material of the tire to degenerate and reduce tire life, and excessive temperature can lead to sudden tire failure. The grade C corresponds to a level of performance which all passenger car tires must meet under the Federal Motor Vehicle Safety Standard No.109. Grades B and A represent higher levels of performance on the laboratory test wheel than the minimum required by law.

Warning: The temperature grades for this tire are established for a tire that is properly inflated and not overloaded. Excessive speed, underinflation, or excessive loading, either separately or in combination, can cause heat buildup and possible tire failure.

¿U –6

Quick index

- If a service reminder indicator or warning buzzer comes on 90
- If your vehicle will not start 168
- If your engine stalls while driving 171
- If your vehicle overheats 171
- If you have a flat tire 172
- If your vehicle needs to be towed 179
- Tips for driving during break-in period 139
- How to start the engine 154
- General maintenance 195
- Complete index 243

Gas station information

Fuel type:

UNLEADED gasoline, Octane Rating 87 (Research Octane Number 91) or higher

See page 139 for detailed information.

Fuel tank capacity:
58 L (15.3 gal., 12.8 Imp.gal.)

Engine oil:
API grade SJ, "Energy-Conserving" or ILSAC multigrade engine oil is recommended.

See page 206 for detailed information.

Tire information: See pages 210 through 215.

Tire pressure: See page 234.

Publication No. OM42479U
Part No. 01999-42479
Printed in Japan 01-9908-00 I
¿¿¿(¿¿U)