ZOE E-TECH 100% ELECTRIC

vehicle user manual

Welcome to your new electric vehicle

This driver's handbook contains the information necessary:
- for you to familiarise yourself with your vehicle, to use it to its best advantage and to benefit fully from the all the functions and the technical developments it incorporates.
- to ensure that it always gives the best performance by following the simple, but comprehensive advice concerning regular maintenance.
- to enable you to deal quickly with minor faults not requiring specialist attention.

It is well worth taking a few minutes to read this handbook to familiarise yourself with the information and guidelines it contains about the vehicle and its functions and new features. If certain points are still unclear, our Network technicians will be only too pleased to provide you with any additional information.

To help you, you will find the following symbols:

and These appear in the vehicle and indicate that you should consult the manual for detailed information and/or limits on operations with respect to your vehicle's equipment.

➥ anywhere in the manual indicates a transfer to a page.

anywhere in the manual indicates a hazard, danger or a safety recommendation.

The descriptions of the models given in this handbook are based on the technical specifications at the time of writing. **This handbook covers all items of equipment** (both standard and optional) **available for these models but whether or not these are fitted to the vehicle depends on the version, options selected and the country where the vehicle is sold.**
This handbook may also contain information about items of equipment to be introduced later in the model year.
The diagrams in the user manual are provided as examples.

Enjoy driving your new vehicle.

Translated from French. Copying or translation, in part or in full, is forbidden unless prior written permission has been obtained from the car manufacturer.

EXTERIOR

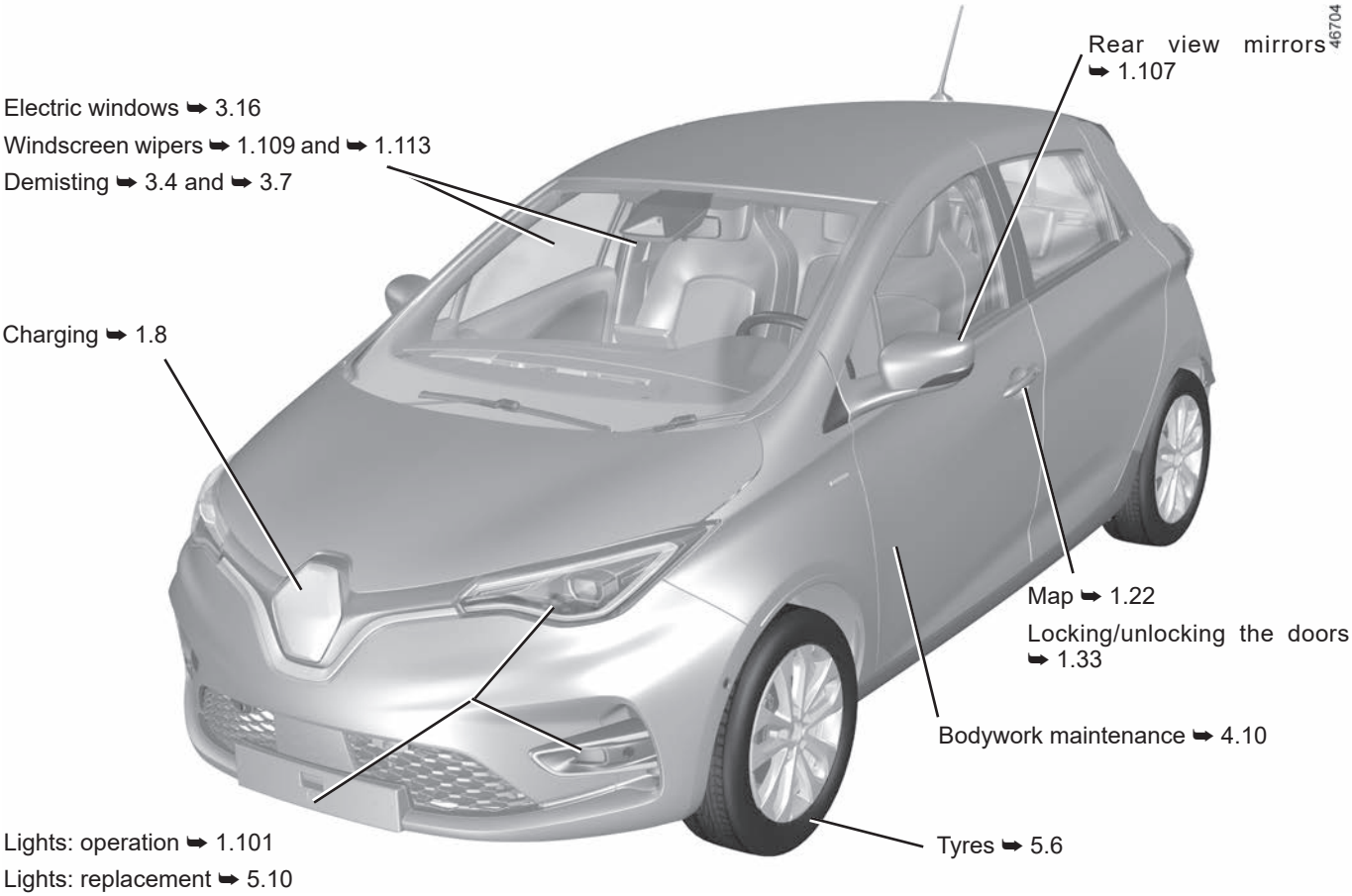
46704
Rear view mirrors ➥ 1.107
Electric windows ➥ 3.16
Windscreen wipers ➥ 1.109 and ➥ 1.113
Demisting ➥ 3.4 and ➥ 3.7
Charging ➥ 1.8
Map ➥ 1.22
Locking/unlocking the doors ➥ 1.33
Bodywork maintenance ➥ 4.10
Lights: operation ➥ 1.101
Lights: replacement ➥ 5.10
Tyres ➥ 5.6

PASSENGER COMPARTMENT

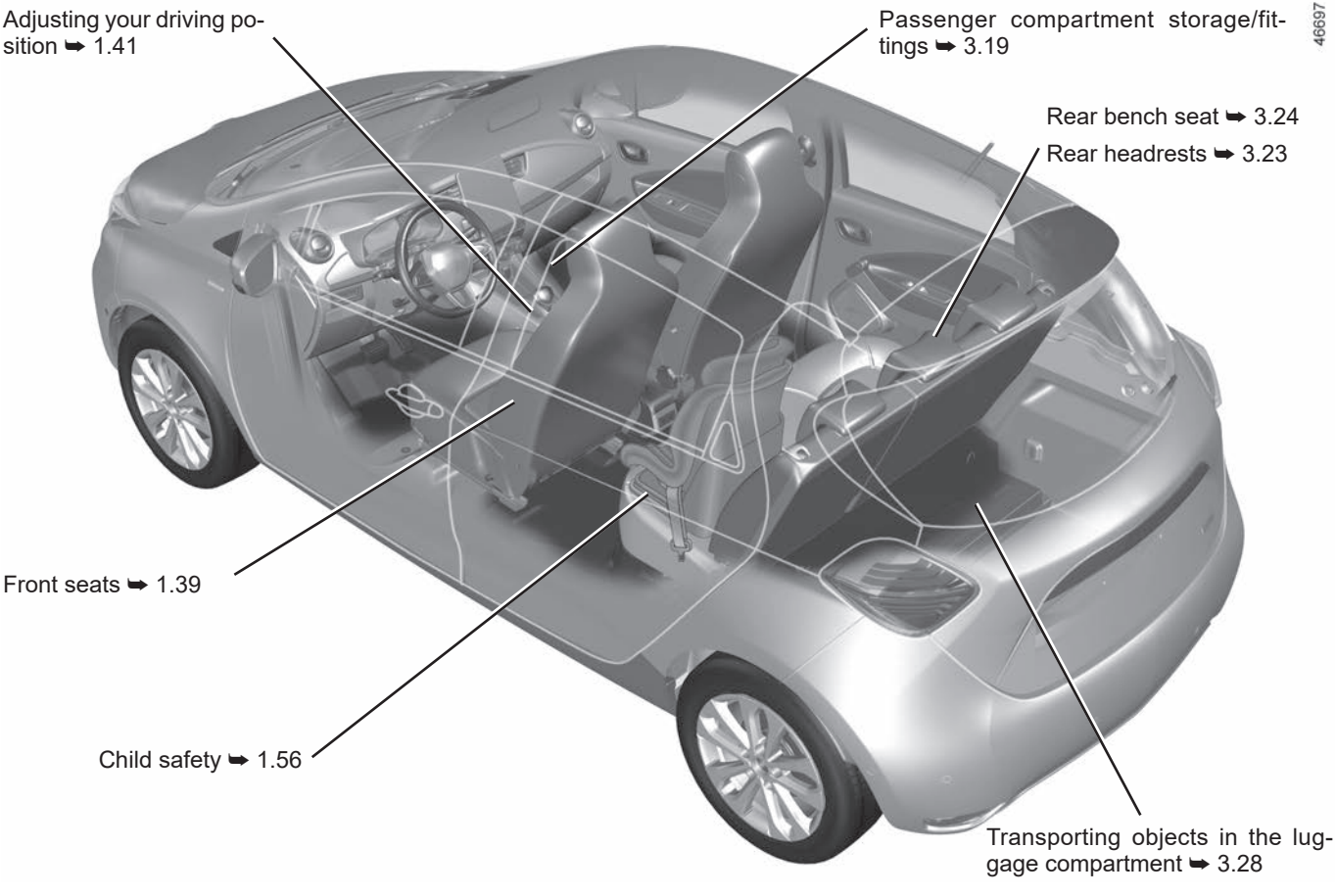

DRIVER'S POSITION

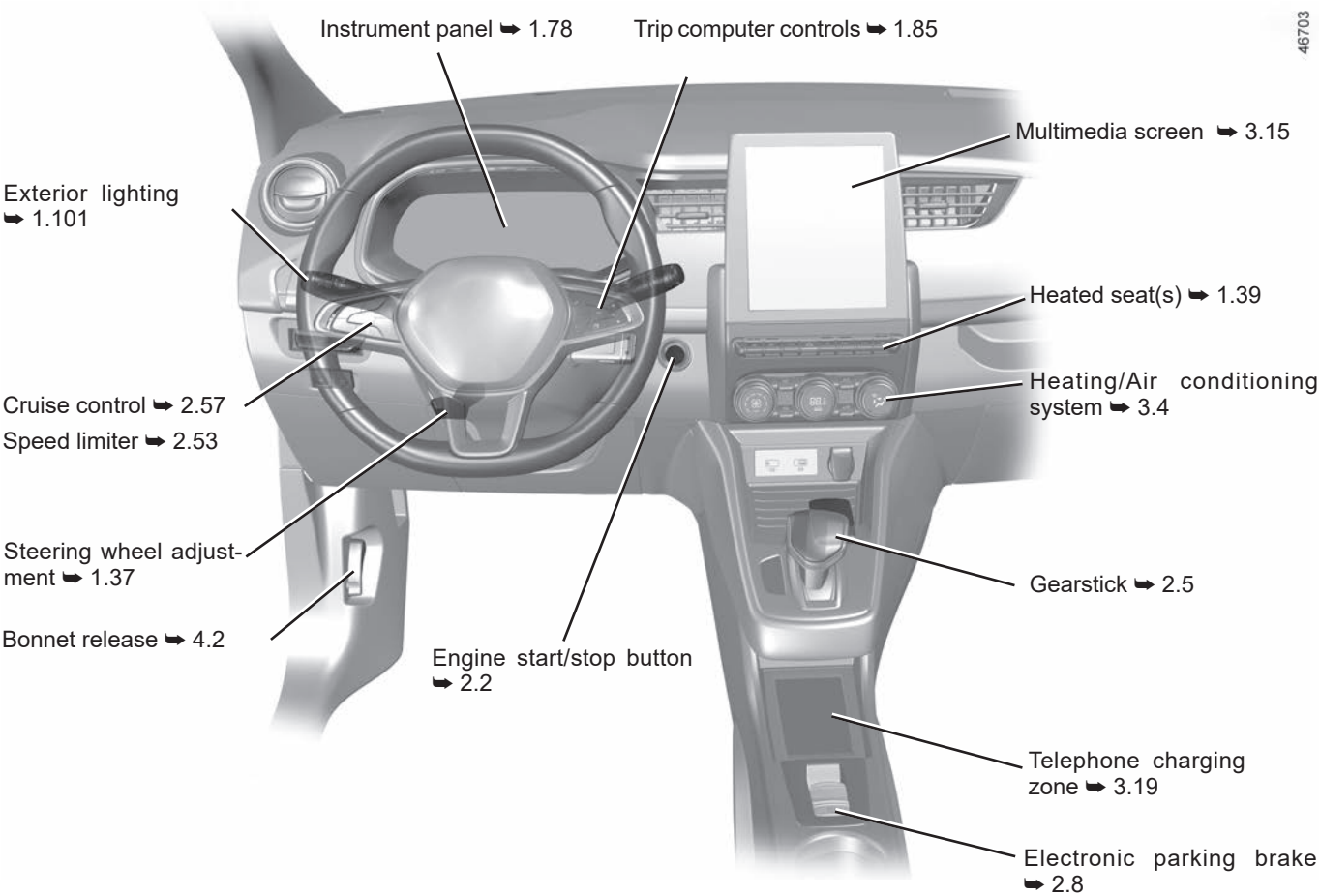

DRIVING AIDS

46890

ABS (anti-lock braking system)
ESC (electronic stability program)
Braking assistance
Hill start assistance
➥ 2.30

Lane departure warning ➥ 2.35

Lane Keeping Assist ➥ 2.39

Active emergency braking ➥ 2.23

Blind spot warning ➥ 2.44

Tyre pressure monitoring system ➥ 2.18

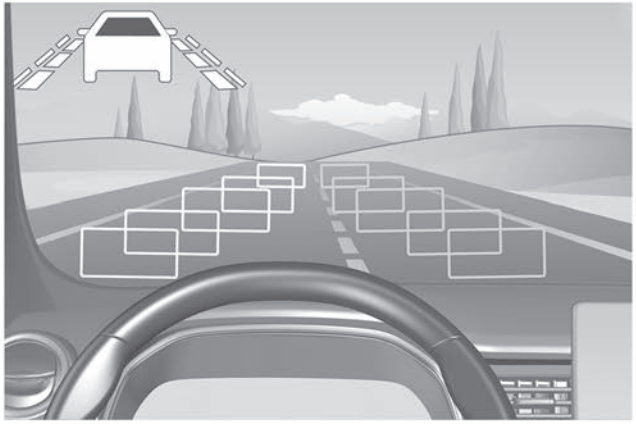

Speed limiter ➥ 2.53

Cruise control ➥ 2.57

Detection of road signs ➥ 2.49

Parking distance control ➥ 2.63

Reversing camera ➥ 2.70

Assisted parking ➥ 2.74

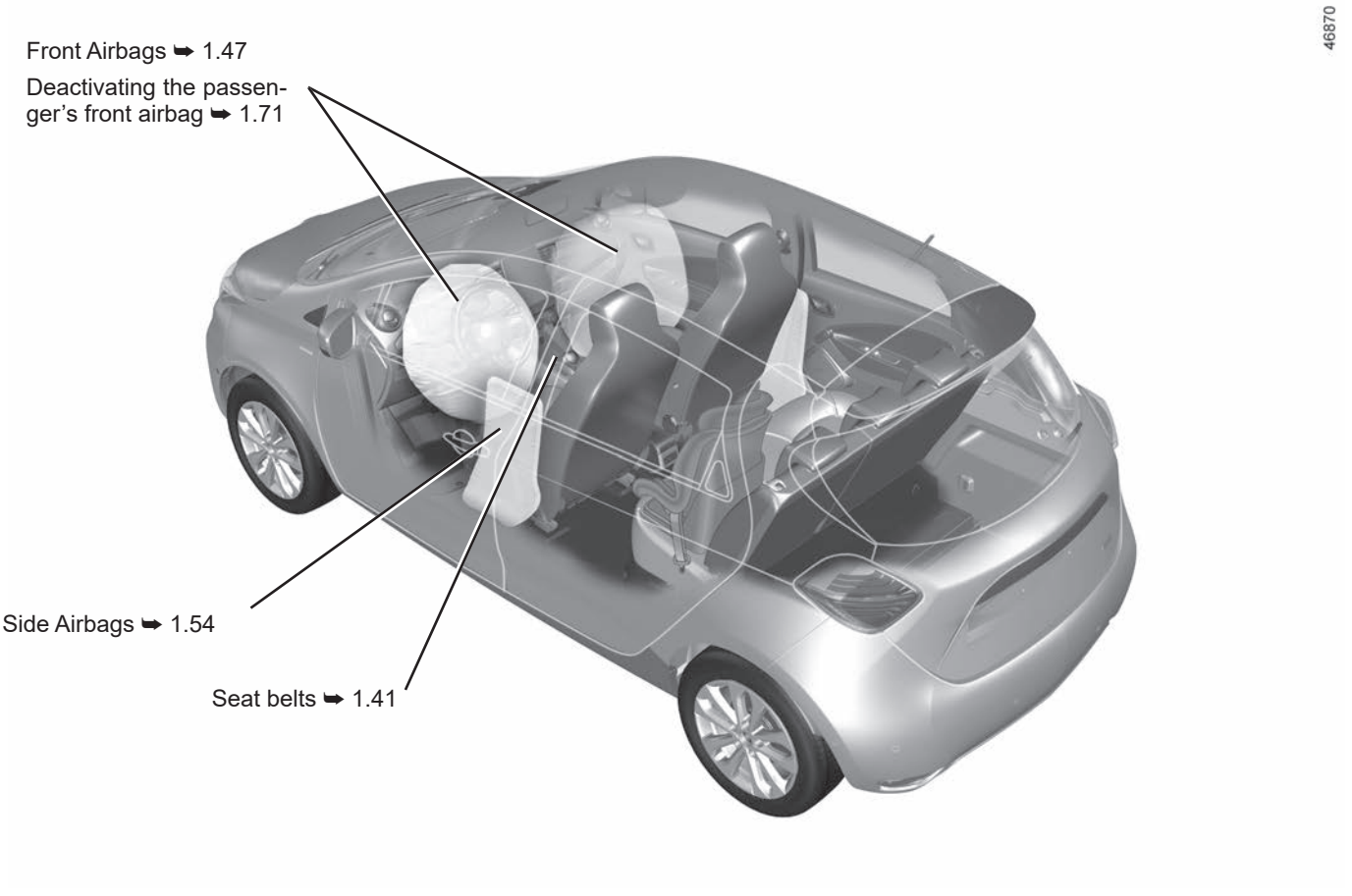
46870
Front Airbags ➥ 1.47
Deactivating the passen-
ger's front airbag ➥ 1.71
Side Airbags ➥ 1.54
Seat belts ➥ 1.41

IDENTIFYING A VEHICLE - LABELS

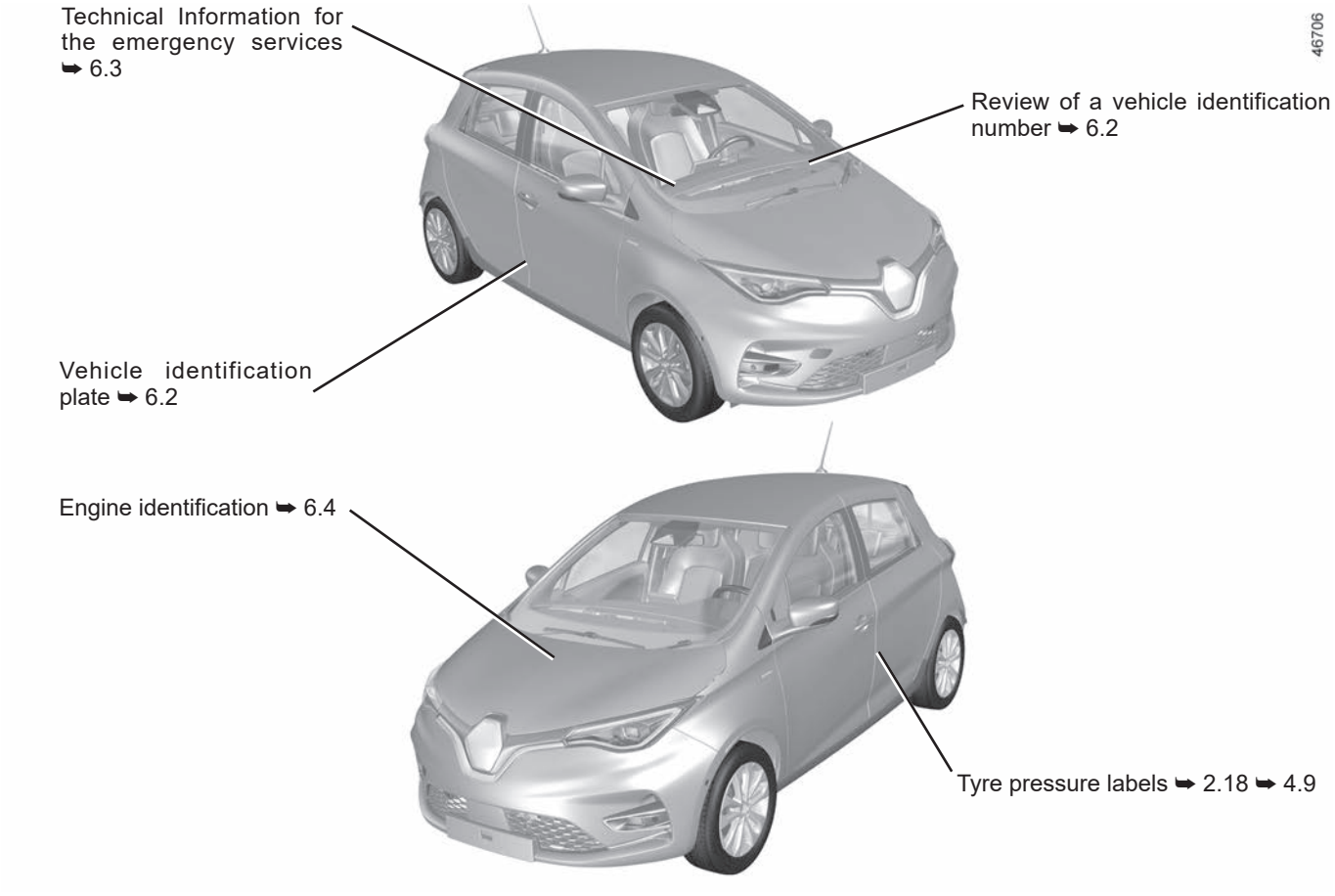

THE ENGINE COMPARTMENT (routine maintenance)

44661

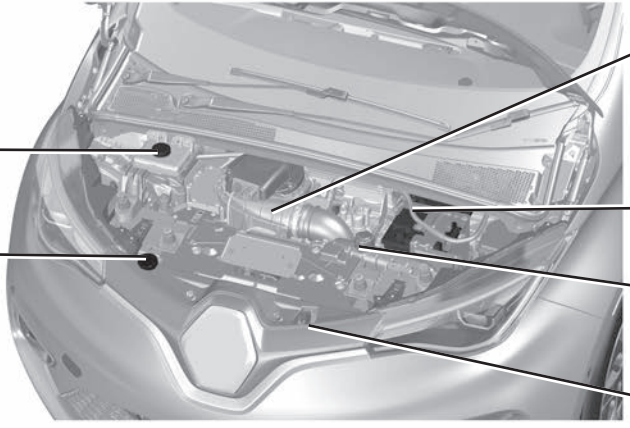

BREAKDOWN RECOVERY

46898

Replacing windscreen wiper blade(s) ➥ 5.21

Replacing headlight bulbs ➥ 5.10

Front towing point ➥ 5.23

Puncture ➥ 5.3

Tools ➥ 5.2

Replacing the rear screen wiper blade ➥ 5.21

Replacing rear light bulbs ➥ 5.11

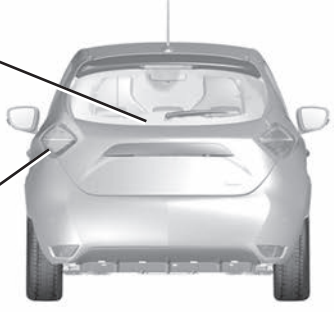

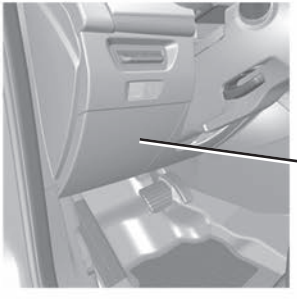

Fuses ➥ 5.17

0.10

C O N T E N T S

Sections

Getting to know your vehicle 1

Driving 2

Your comfort 3

Maintenance 4

Practical advice 5

Technical specifications 6

Alphabetical index 7

0.12

Section 1: getting to know your vehicle

Electric vehicle: introduction . . . 1.2
Important recommendations . . . 1.7
Electric vehicle: charging . . . 1.8
programming . . . 1.20
Hands-free card: general information . . . 1.22
Opening and closing the doors . . . 1.31
Locking, unlocking the opening elements . . . 1.34
Automatic locking when driving . . . 1.36
Steering wheel . . . 1.37
Front seat . . . 1.39
Seat belts . . . 1.41
Methods of restraint in addition to the child seat belts . . . 1.47
to the rear seat belts . . . 1.53
side protection . . . 1.54
Child safety: general information . . . 1.56
choosing a child seat mounting . . . 1.59
fitting a child seat . . . 1.62
deactivating, activating the front passenger airbag . . . 1.71
Driving position . . . 1.74
Warning lights . . . 1.78
Displays and indicators . . . 1.82
Trip computer . . . 1.85
vehicle settings customisation menu . . . 1.94
Clock and outdoor temperature . . . 1.97
Audible and visual signals . . . 1.99
Pedestrian horn . . . 1.100
Exterior lighting and signals . . . 1.101
Rear view mirrors . . . 1.107
Headlight beam adjustment . . . 1.108
Washers, wipers . . . 1.109

ELECTRIC VEHICLE: introduction (1/5)

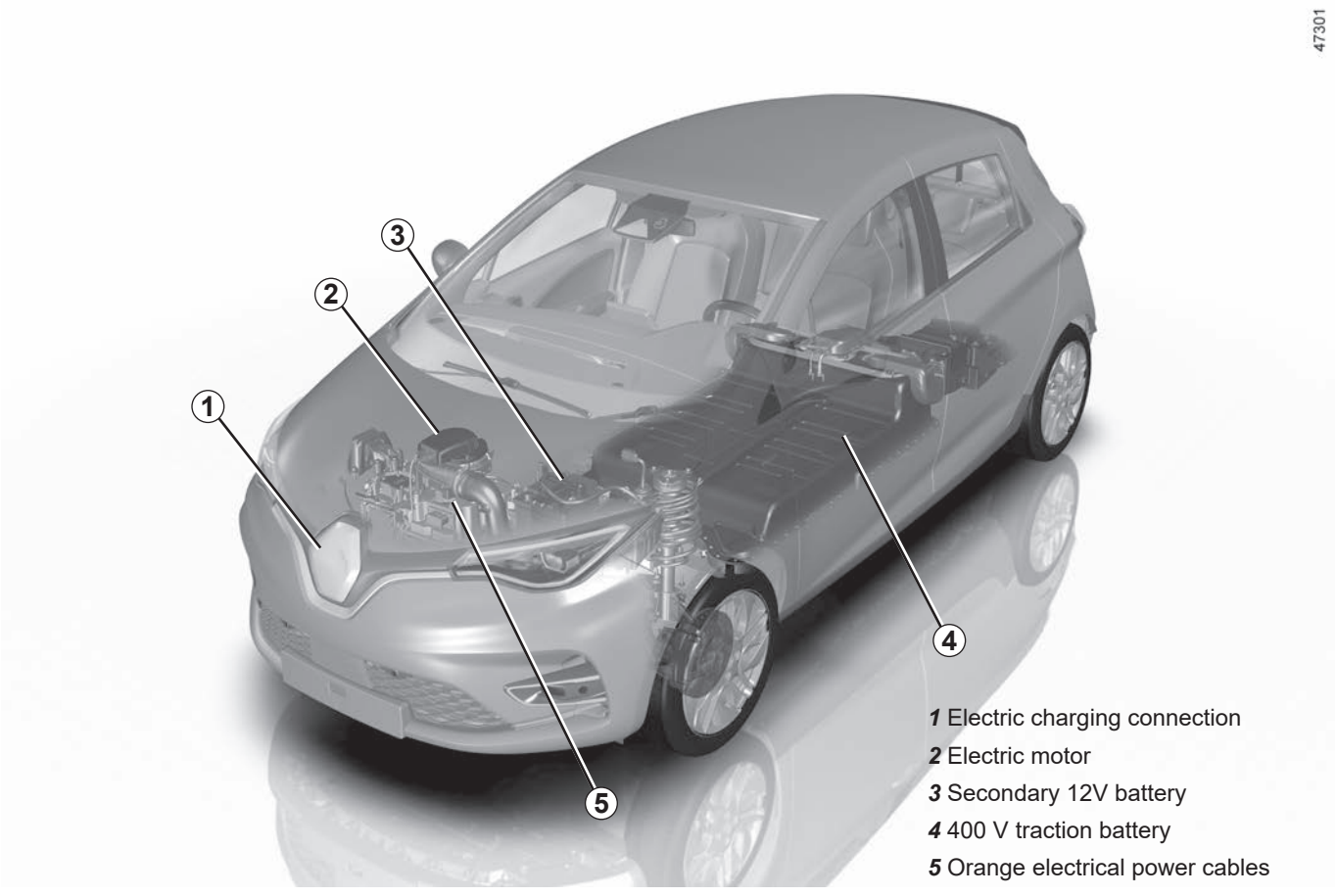

Electric vehicles have special features, but operate in a similar manner to conventional vehicles.

The main difference in electric vehicles is the exclusive use of electric energy instead of fuel, as used in convention vehicles.

We therefore recommend that you read these instructions describing your electric vehicle carefully.

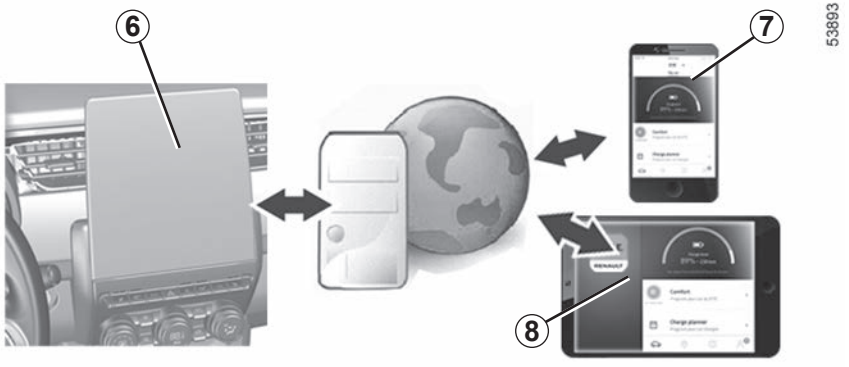

Connected services
(depending on the vehicle)

Your electric vehicle has connected services that provide information and/or control:

– your vehicle's charging status with low battery warning;
– the traction battery charging programming, based on certain choices on offer;
– remaining vehicle range;
– ...

You can access these services by:

– external digital devices (mobile telephones ***7***, tablets ***8*** etc.);
– the vehicle multimedia screen ***6***.

For more information, refer to the multimedia equipment instructions or contact an Approved Dealer.

You can subscribe to a connected service or extend it at any time by consulting an authorised dealer.

Batteries

Your electric vehicle has two types of battery:

– a 400V traction battery;

– secondary 12 V battery.

400 V traction battery

This battery stores the energy necessary to operate the motor in your electric vehicle properly. As with any battery, it discharges after use, and must be regularly recharged.

You do not have to wait until the traction battery hits the reserve level in order to recharge it.

Charging times vary depending on the type of specific wall unit socket or public terminal you connect to.

Your vehicle range will depend on the charge level of the traction battery, and also on your driving style ➥ 2.16.

Secondary 12V battery

The second battery on your vehicle is a secondary 12 V battery: this supplies the energy required to operate vehicle equipment (lights, windscreen wipers, ABS, etc).

Ⓐ

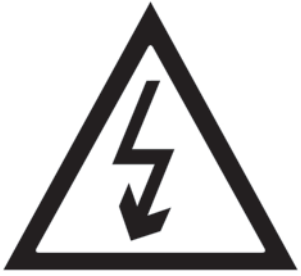

33436

The ***A*** symbol denotes the electrical elements of your vehicle which may present health risks.

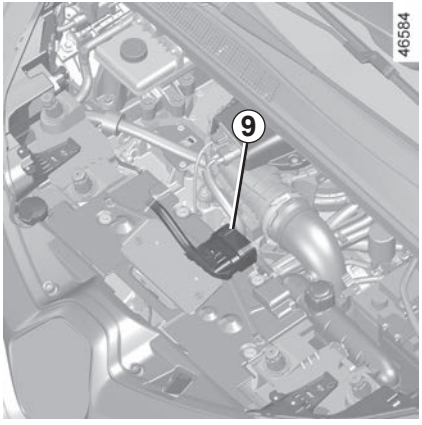

46584

“400 volt” electrical circuit

The 400 V electrical circuit is denoted by orange cables ***9*** and parts bearing the ⚠ symbol.

The vehicle drive system in an electric vehicle uses a direct voltage of approximately 400 volts.

This system can get hot during and after switching off the ignition. Respect warning messages given on the labels in the vehicle.

All interventions or modifications to the 400V electrical system (components, cables, connectors, traction battery) are strictly prohibited due to the risks they present to your safety. Please contact an authorised dealer.

The risk of serious burns or electric shocks can lead to death.

Driving

As with a vehicle fitted with an automatic gearbox, you will have to get used to not using your left foot, and not using this foot to brake.

When driving, if you lift your foot off the accelerator pedal or depress the brake pedal, the motor generates electrical current during deceleration, and this energy is used to brake the vehicle and recharge the traction battery ➥ 2.13.

Special feature:

After a maximum charge of the battery and during the first few miles of using the vehicle, the engine brake will be temporarily reduced. Please adapt your driving style appropriately.

The engine brake should under no circumstances be used as a substitute for the brake pedal.

Bad weather, flooded roads:

Do not drive through floods if the depth of water is above the lower edge of the wheel rims.

Obstructions to the driver
On the driver's side, only use mats suitable for the vehicle, attached with the pre-fitted components, and check the fitting regularly. Do not lay one mat on top of another.
There is a risk of wedging the pedals.

Your electric vehicle is silent. Before leaving it, with your foot on the brake, stop the engine.

RISK OF SERIOUS INJURY.

Noise

Electric vehicles are particularly quiet. You will not yet necessarily be used to it, and neither will other road users. It is difficult for them to hear the vehicle when it is moving.

As the motor is silent, you will hear noises that you are not used to hearing (aerodynamic noises, tyre noise, etc.).

Each time the ignition is switched off, the ventilation will be switched off after about ten seconds.

Pedestrian horn

The pedestrian horn enables you to warn others of your presence – especially pedestrians and cyclists.

When the engine is started, the pedestrian horn is activated automatically. The sound is triggered when the vehicle speed is between approximately 1 and 19 mph (1 and 30 km/h) ➥ 1.100.

IMPORTANT RECOMMENDATIONS

Please read these instructions carefully. Failure to follow these instructions may lead to a **risk of fire, serious injury or electric shock which may present a risk to life.**

In the event of an accident or impact

In the event of an accident or an impact to the underside of the vehicle (e.g.: striking a post, raised kerb or other street furniture), this may damage the electric circuit or the traction battery.
Have the vehicle checked by an authorised dealer.

Never touch the “400 volt” components or orange cables which are exposed and visible inside or outside the vehicle.

In the event of serious damage to the traction battery, leaks may occur:
– never touch the liquids (fluids, etc.) coming from the traction battery;
– in the event of contact with the body, wash the affected area with plenty of water and consult a doctor as soon as possible.

In the event of an impact, even slight, against the charging flap and/or valve, have them checked by an authorised dealer as soon as possible.

In the event of fire

In the event of fire, make everyone evacuate the vehicle immediately and contact the emergency services, informing them that this is an electric vehicle.
Only use extinguishing agents ABC or BC that are permitted for use with electrical fires. Do not use water or other extinguishing agents.
In the event of damage to the electrical circuit, please contact an approved dealer.
All towing operations ➥ 5.23.

Washing the vehicle

Never wash the engine compartment, the charging connection or the traction battery with a high-pressure jet.
This risks damaging the electric circuit.
Never wash the vehicle while it is charging.
Never wash the charging lead while the vehicle is charging.
Never wash the charging cable and the charging cable plug while the cable is not connected, in order to prevent corrosion of the charging pins.
Risk of electric shock and a risk to life.

ELECTRIC VEHICLE: charging (1/12)

Charging schematic diagram

1 Specific wall socket or recharging terminal

2 Charging cord

3 Electric charging connection

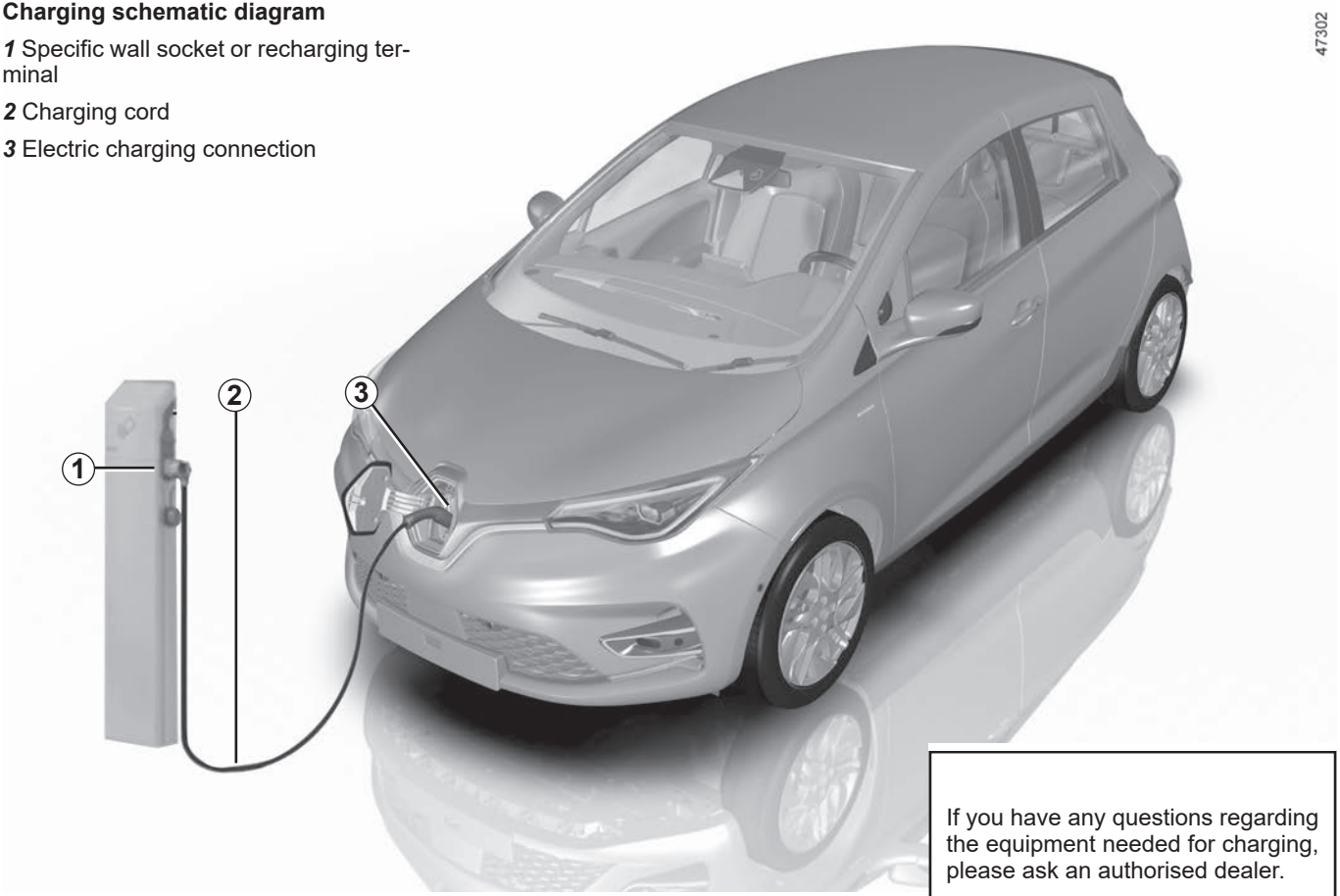

If you have any questions regarding the equipment needed for charging, please ask an authorised dealer.

Important recommendations for charging your vehicle

Please read these instructions carefully. Failure to follow these instructions may lead to **a risk of fire, serious injury or electric shocks which could result in death.**

Charging

Do not do anything to the vehicle during charging (washing, working in the engine compartment, etc.).

In the event of the presence of water, signs of corrosion or foreign bodies in the charging cord connector or in the vehicle charging socket, do not charge the vehicle. Fire hazard.

Do not attempt to touch the cord contacts, the domestic socket or the vehicle charging socket, or introduce objects into them.

Never plug the charging cord into an adapter, multiple socket or extension lead.

The use of generators is prohibited.

Do not remove or change the vehicle charging socket or the charging cord. Fire hazard.

Do not modify or perform any action on the installation during charging.

In the event of an impact, even slight, against the charging socket or valve, have them checked by an authorised dealer as soon as possible.

Take care of the cord: do not tread on it, immerse it in water or pull on it or let anything knock against it.

Check regularly that the charging lead is in good condition.

In the event of damage to the charging lead (corrosion, browning, cuts, etc.), to the unit or to the vehicle's electrical charging socket, do not use them. Please see an authorised dealer to replace them.

In the event of non-activation of the charging flap locking mechanism and/or unlocking of the vehicle's electric charging socket, please contact an approved dealer.

Charging cord *A*

This lead is specific to your vehicle and designed for connecting to wall sockets or public terminals to enable standard charging of the traction battery.

We recommend that you use a charging cord that enables a standard charge to charge the traction battery.

Each charging lead is stored in the luggage compartment of the vehicle.

Charging cord *B*

This cord allows:

– in normal use, on a socket used only for the vehicle (14 A/16 A charge);

– occasional charge using a domestic socket, (8 A charge) when you are not at home, for example.

Sockets must be fitted as stated in the instructions in the instructions supplied with the charging cord ***B***.

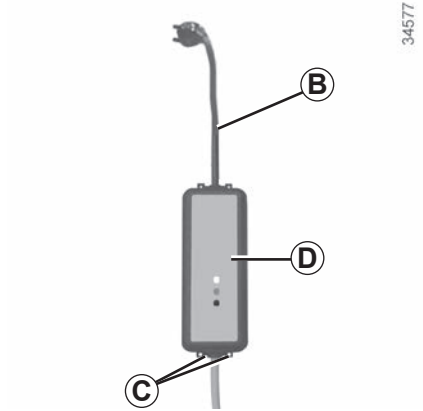

Always read the charging cord instructions **carefully** before using it ***B***.

Never leave the socket hanging by the cord. Use the hooks ***C*** to attach it.

If a charging cord malfunctions during the charging process (red warning light on the unit ***D***), stop charging immediately. Please refer to the cord instructions.

Important recommendations for charging your vehicle

Please read these instructions carefully. Failure to follow these instructions may lead to **a risk of fire, serious injury or electric shocks which could result in death.**

Choice of charging cord

The standard charging cords supplied with the vehicle have been designed specifically for this vehicle. It is designed to protect you against the risks of electric shock that can lead to death or fire.
Do not use with the charging leads of previous vehicles as they are not adapted. For safety reasons, the use of a charging cord not recommended by the manufacturer is strictly forbidden. Failure to follow this instruction can lead to risks of fire or electric shock that can prove fatal. For information on a charging cord suited to your vehicle, please consult an authorised dealer.
Using the charging lead *B*
Please read the instructions that come with the charging cord carefully to learn about precautions you must take when using the product and the technical specifications required when fitting the socket.

Installation

Power supply systems
Only use charging terminals which conform to the IEC 61851-1 standard and connecting points protected by:
– a type A 30 mA residual differential current system specific to the socket used;
– an overcurrent protection device;
– protection against overvoltage relating to lightning in exposed areas (IEC 62305-4).

Wall socket
Have a special wall socket installed by a qualified professional.

In the case of domestic charging
Have a qualified professional check that each socket to which you will connect the charging cord complies with the standards and regulations in force in your country and that it complies with the specifications described previously in the information on “Power supply systems”.

Charging types that conform to European standards

Alternating current (AC)
If the information is displayed on the vehicle charging flap, follow the instructions below.
Before plugging in a charging lead, check that:
– the colour and one of the letters of the inlet socket ***4*** correspond to the colour and one of the letters on the end ***5*** of the lead;
– the colour and one of the letters of the inlet socket ***3*** correspond to the colour and one of the letters on the end ***6*** of the lead.

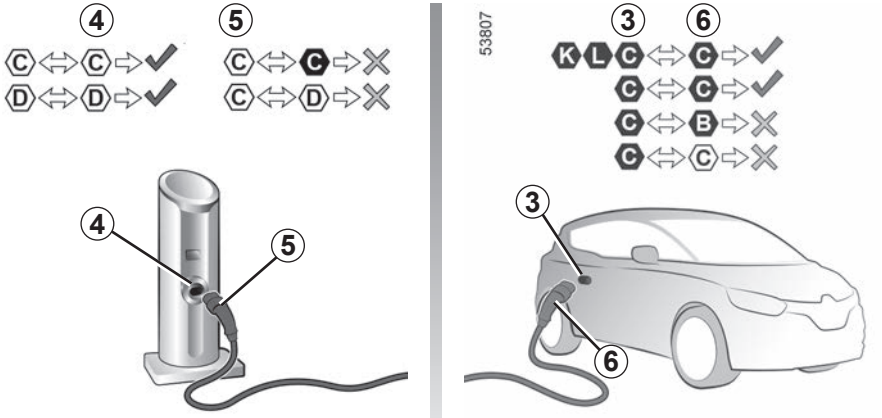

Charging type	Alternating current (AC)			
Connection	Charging terminal *4*/ Charging lead *5*		Vehicle *3*/Charging lead *6*	
Charging types that conform to European standards (for all other cases, please consult an approved dealer).	C	D	B	C

Charging types that conform to European standards (continued)

Direct current (DC)
If the information is displayed on the vehicle charging flap, follow the instructions below.
Before plugging in a charging lead, make sure that the colour and one of the letters of the inlet socket ***3*** correspond to the colour and one of the letters on the end ***6*** of the charging lead.

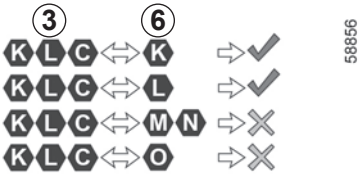

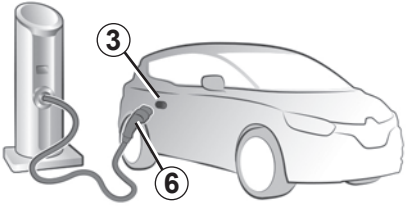

Charging type	Direct current (DC)				
Connection	Vehicle *3*/Charging lead *6*				
Charging types that conform to European standards (for all other cases, please consult an approved dealer).	K	L	M	N	O

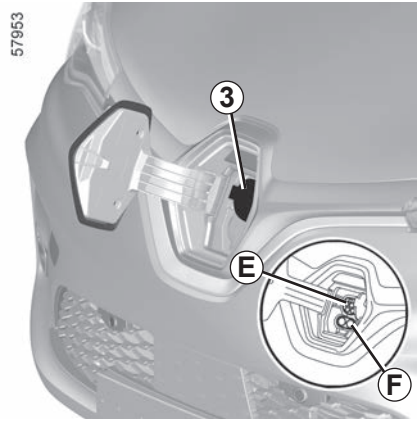

Electric charging connection *3*

Note: If in a snowy environment, remove snow from the vehicle charging area before plugging in or disconnecting. Snow in the socket may block the insertion of the charging cord plug.

The vehicle has two charging connections located at the front of the vehicle:

– ***E*** socket for charging up to 22 kW;

– ***F*** socket, depending on the vehicle, for rapid charging.

Precautions

Avoid charging and parking your vehicle in extreme temperatures (hot or cold).

Under extreme conditions, charging may take several minutes before starting (time required for the traction battery to cool down or warm up).

When the vehicle is parked for more than seven days in temperatures below about -25°C, charging the traction battery can become impossible.

If the vehicle is parked for more than three months with near zero charge, it may become impossible to charge the battery.

To preserve the service life of your traction battery, avoid parking the vehicle for more than one month with high charge, especially when the weather is very hot.

Energy level availability depends on the battery temperature. It may therefore vary between the time the vehicle is stopped and restarted, depending on whether the battery is cold or warm.

In anticipation of arrival and parking in cold conditions (negative temperatures), if the battery charge level is below approximately 30%, the vehicle must be recharged within approximately four hours after the vehicle is parked.

When arriving in a cold location, the battery temperature will drop and approach the exterior temperature. In such a situation the battery's useful capacity (available energy level) may be reduced significantly to the extent that it will not be possible to start the vehicle again.

Note: the useful capacity will be recovered during the next journey if the battery temperature increases sufficiently.

Favour charging the traction battery after driving and/or in mild temperatures. Otherwise, charging may take a longer period of time or even become impossible.

Recommendations

– In high temperatures, try to park and recharge the vehicle in a shaded/covered location.

– Charging can be performed in the rain or snow.

– Activating the air-conditioning increases the charge duration period.

In the absence of any protection against overvoltage, we recommend that you do not recharge the vehicle in stormy weather (lightning, etc.).

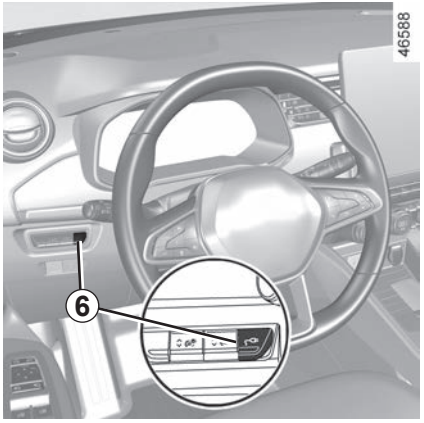

Recharging the traction battery

Vehicle stationary, **ignition off:**

– take the charging cord located in the boot of your vehicle;

– remove it from its storage bag;

– press the ***6*** switch to unlock the ***10*** charging flap;

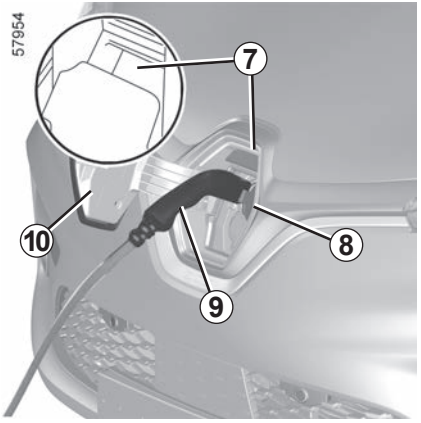

– open valve ***8***;

– plug in the end of the cord to the power supply;

– grab the handle ***9***;

– plug in the vehicle cord. The warning light ***7*** flashes in yellow;

– after you hear a locking click, check that the charging cord is properly plugged in. To check the locking, pull gently on the handle ***9***.

The charging cord is automatically locked with the vehicle. This will make it impossible to unplug the cord from your vehicle.

If rapid charging the vehicle (**DC**), the charging cable between your vehicle and the charging terminal must not exceed **30 metres**.

If there is any doubt about the length of the cable, consult the owner of the charging terminal (**DC**).

Make sure you fully uncoil the charging cord to limit its heating.

Do not use an extension lead, multiple socket or adapter.

Fire hazard.

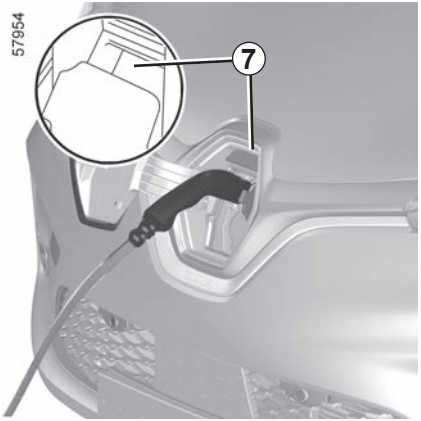

During charging, the warning light ***7*** flashes in blue.

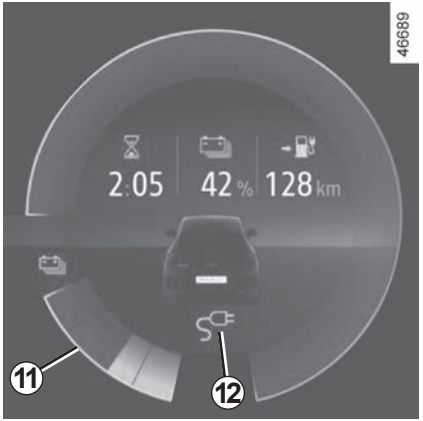

The traction battery charging time depends on the amount of energy remaining and the power delivered by the charging terminal. The information is displayed on the instrument panel during charging ➥ 1.82.

Note: under certain conditions, the actual charging time may be longer than the charging time displayed on the instrument panel. This depends on:
– the quality of the electrical network;
– the initial charge level;
– the exterior temperature is too cold;
– ...

In the event of a problem with the charging cable, we recommend that you replace it with a cable that is identical to the original. Consult an approved dealer.

When charging starts, the following information is displayed on the instrument panel:
– the energy level on the battery warning light ***11***;
– the battery refill rate;
– an estimate of the remaining charging time (this is not displayed after about 95% charge);
– the warning light ***12*** indicates that the vehicle is connected to a power supply;
– your vehicle range will vary according to the charge level.

The display on the instrument panel disappears after a few seconds. It reappears on the instrument panel when a door is opened. Once charging is complete, the warning light ***7*** appears continuously in green. You do not need to wait until the charge is at reserve levels to recharge your vehicle.

Operating faults

If the warning light ***7*** appears continuously in red, please contact an approved dealer.

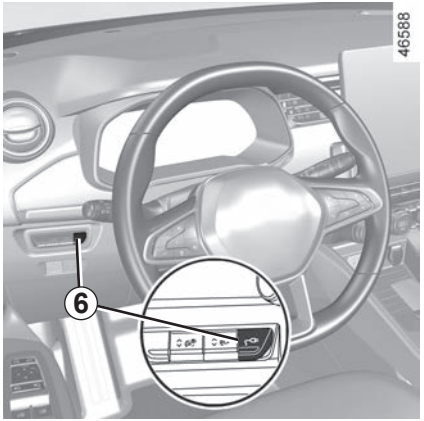

Precautions to take when removing from the socket

It is imperative to follow the unplugging steps in order.

– Press the switch ***6*** or **press and hold** on the door unlocking button on the card in order to release the vehicle charging lead;

– grab the handle ***9***;

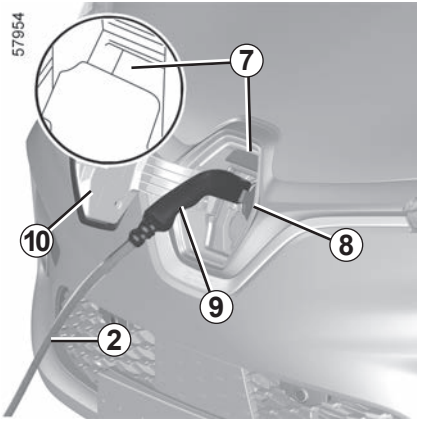

– unplug the charging lead ***2*** from the vehicle;

– the valve ***8*** must be closed;

– you must close the ***10*** charging flap and press on it in order to lock it;

– unplug the lead ***2*** from the power supply ***1***;

– place the lead ***2*** in its storage bag and store it in the luggage compartment.

Note: immediately after a long charge of the traction battery, the cable may be hot. Please use the handles.

After pressing the charging cord unlocking button, you have 30 seconds to unplug it before it locks again.

To avoid disturbing the charging monitoring system, do not install any antistatic strip to the vehicle.

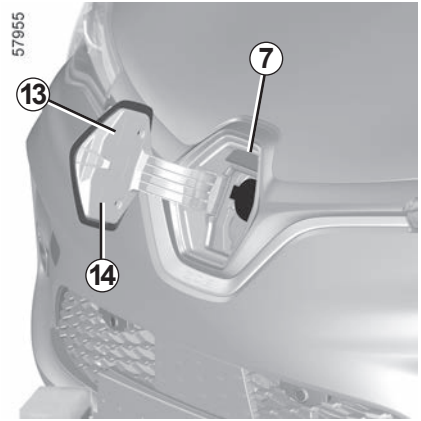

Label *13*

The label ***13*** located on the charging flap ***10*** displays details on how the charging operation is indicated by the status of the warning light ***7***:

– flash in yellow: the lead is plugged into the vehicle and the system carries out its checks;
– flashing in blue: charging is in progress;
– illuminated continuously in blue: charge programming is activated;
– illuminated continuously in green: the vehicle is fully charged;
– flashing in red: operating fault.

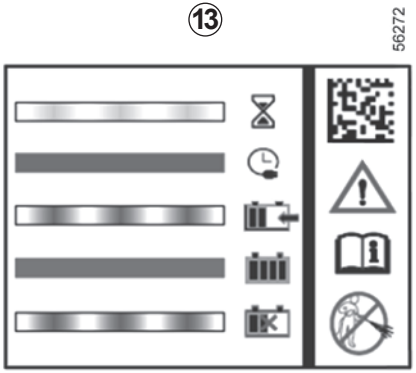

The label ***13*** located on the right-hand side reminds you of the following instructions:

– do not wash the charging flap using a high-pressure water jet;
– with the vehicle stationary, the valve and the charging flap can be open;
– when the vehicle is being driven, the valve and the charging flap must be closed;
– open the flap to connect the charging lead;
– close the flap again once disconnected;

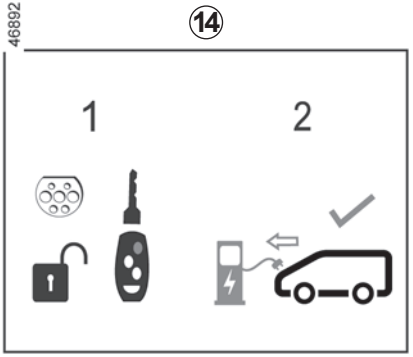

– connect to a domestic socket, an alternating voltage charging terminal or a quick charging terminal;
– for any information on charging, please consult your vehicle user manual.

Label *14*

The label ***14*** located on the charging flap ***10*** indicates that it is possible to release the charging flap from the vehicle by **pressing and holding** the door unlocking button on the card.

ELECTRIC VEHICLE: programming charging (1/2)

Charging programming

With the vehicle stationary and the engine running, from the “Settings” on the multimedia screen ***1***, select the “Vehicle” tab. Use the “EV programming” menu to configure charging for your vehicle.

When the programming is confirmed, the indicator light lights up on the instrument panel.

Note: charging will start if the engine is shut down and the vehicle is connected to a power supply and access is authorised.

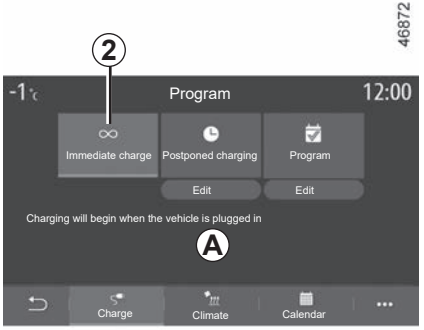

“Immediate charging” *2*

With the vehicle connected to a power supply, charging starts.

Area ***A*** informs you that “Immediate charging” is activated.

Note: you can deactivate this option by pressing OFF.

Please refer to the multimedia instructions for further information.

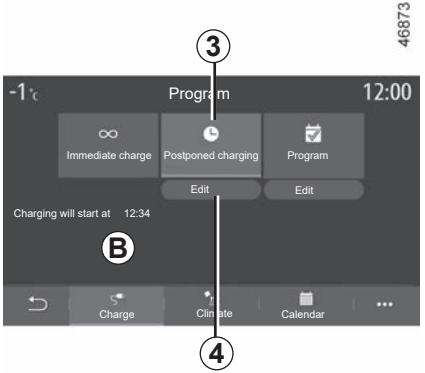

“Postponed charging” *3*

You can programme the start time for charging.

Press “Edit” ***4*** to open the settings to set the start time for charging.

Set the start time for charging then press “Close” to confirm.

Area ***B*** shows the time programmed for charging to start.

With the vehicle connected to a power source and the engine switched off, charging starts at the scheduled time.

ELECTRIC VEHICLE: programming charging (2/2)

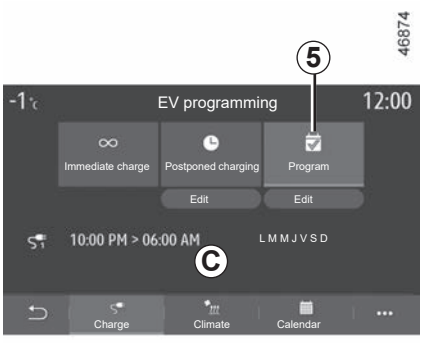

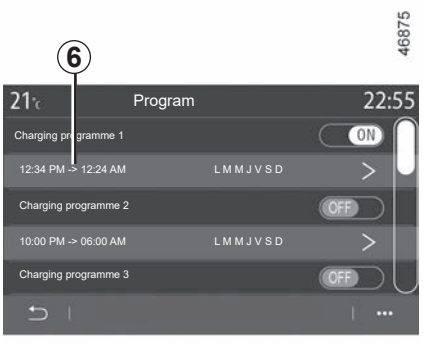

“Program” *5*

You can save several programmed charging times per week.

Select the programme time ***6*** that you wish to change to access the settings.

You can disable one of your saved programmes by pressing “OFF".

Set the charging start and end times as well as the days to which these times will apply. Press “Close” to confirm.

Note: if the start and end times are identical, charging time is 24 hours. You can’t confirm a charging programme if you don’t select a day of the week.

Programmed times are displayed in area ***C***.

With the vehicle connected to a power source and the engine switched off, charging starts at the scheduled time.

For safety reasons, carry out these operations when the vehicle is stationary.

HANDS-FREE CARDS: general information (1/3)

1 Unlocking the doors and luggage compartment.

2 Locks all the opening elements.

3 Unlocking/locking the boot.

4 Switching on the lighting remotely.

The card is used for:

– locking/unlocking the opening elements (doors, boot);
– unlocking the charging cable ➥ 1.8 ;
– switching on the vehicle lighting remotely (refer to the following pages).

Battery life

Make sure that the correct battery type is being used, and that the battery is in good condition and inserted correctly. Its service life is approximately two years: it should be replaced when the message “Keycard Battery Low” appears on the instrument panel ➥ 5.15.

card operating range

This varies according to the environment: take care not to accidentally lock or unlock the vehicle by inadvertently pressing the buttons on the card.

Note: if any opening element (door or luggage compartment) is open or not properly shut, locking is unsuccessful and the hazard warning lights and side indicator lights do not flash.

When the battery is flat, you can still lock/unlock and start your vehicle. ➥ 2.2 ➥ 1.33 ➥ 5.15.

Distance lighting function

Pressing button ***4*** switches on the dipped beam headlights and the exterior lighting for approximately 20 seconds. This can be used, for example, to identify the vehicle from a distance when parked in a car park. Pressing and holding the ***4*** button for approximately two seconds activates the exterior lighting and a sound is emitted.

Note: pressing button ***4*** again switches off the lighting.

Advice

Avoid leaving the card in hot, cold or humid areas.

Do not keep the card in a place where it could be bent or damaged accidentally, such as in a back pocket of a garment.

Replacement: need for an additional card

If you lose your card or require another, you can obtain one from an authorised dealer.
If a card is replaced, it will be necessary to take the vehicle **and all its cards** to an approved Dealer to initialise the system.
You may use up to four cards per vehicle.

Interference

Interference by factors in the immediate vicinity (external installations or the use of equipment operating on the same frequency as the remote control) may affect the operation of the remote control.

Driver's responsibility when parking or stopping the vehicle

Never leave an animal, child or adult who is not self-sufficient alone in your vehicle, even for a short time.

They may pose a risk to themselves or to others by starting the engine, activating equipment such as the electric windows or locking the doors, for example.

Also, in hot and/or sunny weather, please remember that the temperature inside the passenger compartment increases very quickly.

RISK OF DEATH OR SERIOUS INJURY.

Fitting a strap *7*

Slide the rear casing ***5*** downwards while pressing on zone ***A***.

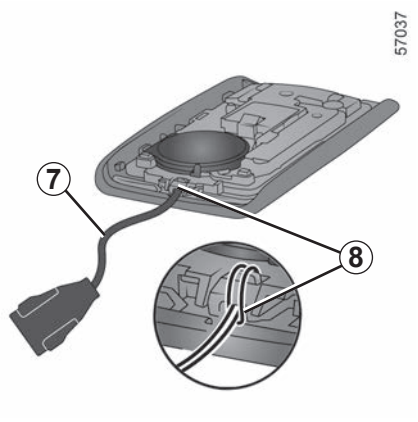

Insert the strap into the ***8*** component and pass the end of the strap through the buckle.

Position the strap at the ***6*** opening and close the cartridge.

Note: check that the diameter of the strap cord ***7*** will fit the opening ***6***.

There are two ways to unlock/lock the vehicle:

– “hands-free”, when approaching and moving away from the vehicle;

– using the card in remote control mode.

Never leave your vehicle with the card inside.

Deactivating/activating the “hands-free” mode

Depending on the vehicle, you can deactivate/activate unlocking when approaching and locking when moving away from the vehicle.

You can also disable/activate the sound signal that is emitted upon locking when moving away from the vehicle ➥ 1.94.

Do not store the card anywhere it may come into contact with other electronic equipment (computer, phone etc.) as this could hinder its operation.

Driver’s responsibility when parking or stopping the vehicle

Never leave an animal, child or adult who is not self-sufficient alone in your vehicle, even for a short time.

They may pose a risk to themselves or to others by starting the engine, activating equipment such as the electric windows or locking the doors, for example.

Also, in hot and/or sunny weather, please remember that the temperature inside the passenger compartment increases very quickly.

RISK OF DEATH OR SERIOUS INJURY.

Unlocking in “hands-free” mode, when approaching and moving away from the vehicle

With the card in access zone ***1***, the vehicle will unlock.

The hazard lights and side repeaters **flash once** to indicate that the doors have unlocked and, on some vehicles, the door mirrors fold out automatically.

Remote “Hands-free” locking

With the card on you, doors and luggage compartment door closed, move away from the vehicle: it will lock automatically once you have left the access zone ***1***.

Note: the distance at which the vehicle locks depends on the surroundings.

The hazard lights **flash twice** then **remain illuminated** for about four seconds, a beep sounds to indicate that the doors have locked and, on some vehicles, the door mirrors fold in automatically.

Depending on the equipment level, the door mirrors fold in automatically to confirm locking.

If the card has been within the detection area ***1*** for approximately 15 minutes, remote locking is disabled. To lock the vehicle, press button ***3*** on the card.

The vehicle cannot be remotely locked if the card is within the area ***2***.

“Hands-free” unlocking using button 4

With the card in area ***1*** and the vehicle locked, press button ***4*** to unlock the entire vehicle.

Unlocking is indicated by **one flash** of the hazard warning lights and the indicator lights.

Special features of the unlocking system

Under certain circumstances, approach unlocking is deactivated:

– after eight days of no use of the vehicle;

– if the card remains close to the ***1*** area of the vehicle for approximately five minutes **after the vehicle has been locked**;

– after several passes in the vicinity of the ***1*** area of the vehicle and **without the door being unlocked**.

Press button ***4*** or the remote control to unlock the vehicle and reactivate the mode.

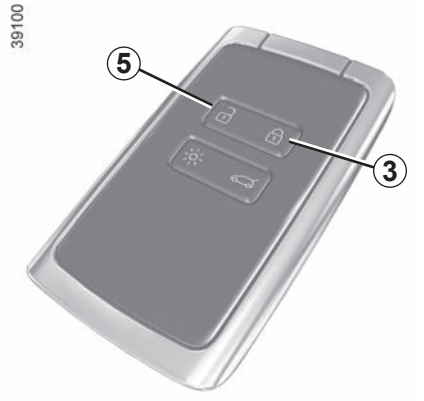

Using the card as a remote control

Unlocking with the card

Press button ***5***.

Unlocking is indicated by **one flash** of the hazard warning lights and the indicator lights.

The card buttons are deactivated when the engine is running.

Locking using the card

With the doors and boot closed, press button ***3***: the vehicle locks.

The hazard warning lights **flash twice** to indicate that the vehicle is locked and, depending on the vehicle, the door mirrors automatically fold in.

Pressing the ***3*** button twice locks the vehicle and enables the closure of the front and rear windows (depending on the vehicle).

Note:

– the maximum distance at which the vehicle locks depends on the surroundings;

– if a door or the boot is open or not properly shut, locking is not carried out. A beep sounds but the hazard warning lights and side repeaters do not flash.

If, **while the engine is running,** a door is opened and closed, and the card is no longer in the zone ***2***, the message “Keycard Not Detected” indicates that the card is not inside the vehicle. This will, for example, prevent you from driving away after dropping off a passenger who has kept the card on them.

The warning disappears when the card is detected again.

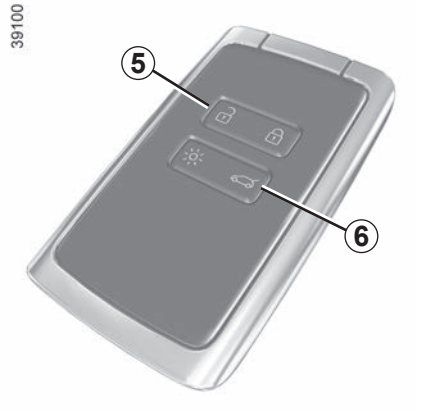

Locking/unlocking only the boot

Press the button ***6*** to lock/unlock the boot only.

Driver’s responsibility when parking or stopping the vehicle

Never leave an animal, child or adult who is not self-sufficient alone in your vehicle, even for a short time.

They may pose a risk to themselves or to others by starting the engine, activating equipment such as the electric windows or locking the doors, for example.

Also, in hot and/or sunny weather, please remember that the temperature inside the passenger compartment increases very quickly.

RISK OF DEATH OR SERIOUS INJURY.

Unlocking the charging cord

Press button ***5*** to unlock the charging cable from the vehicle.

CARD: deadlocking

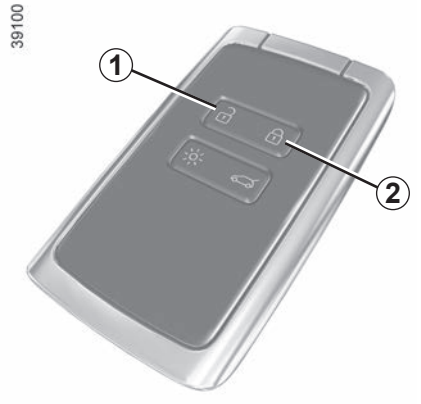

If the vehicle is equipped with a deadlocking function, this allows you to lock the opening elements and to prevent the doors from being unlocked using the interior handles (for example, by breaking the window and then trying to open the door from the inside).

Never use deadlocking if someone is still inside the vehicle.

To activate deadlocking

Press button ***2*** twice in quick succession.

Locking is confirmed by **two slow flashes** and **three quick flashes** of the hazard warning lights and side indicator lights.

Depending on the vehicle, the door mirrors fold in automatically when the vehicle is locked ➥ 1.107.

To deactivate deadlocking

Unlock the vehicle using button ***1*** on the card.

The hazard warning lights **flash once** to indicate that the doors have been unlocked.

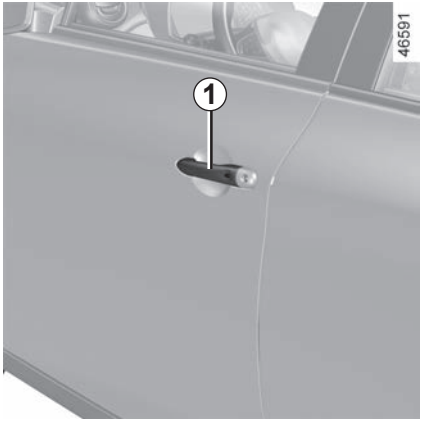

Opening the doors from the outside

Front doors

With the doors unlocked, pull handle ***1***.

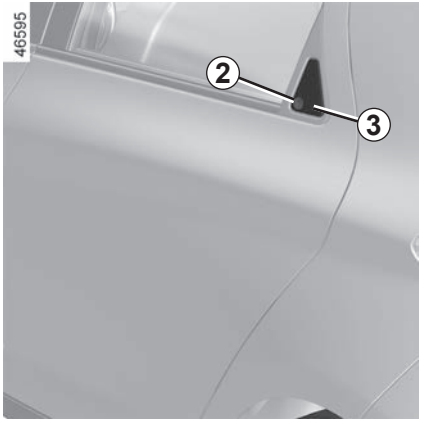

Rear doors

With the doors unlocked:

– press on recess ***2*** to move the handle ***3***;

– slide your hand into the handle ***3*** and pull towards you.

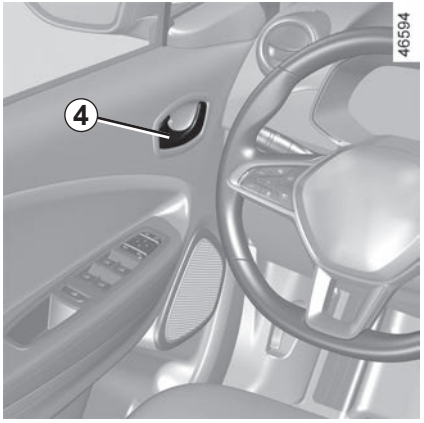

Opening from the inside

Pull handle ***4***.

Lights-on reminder buzzer

A warning beep sounds when the driver's door is opened to warn you that the lights are still on.

As a safety precaution, the doors should only be opened or closed when the vehicle is stationary.

Door/tailgate open buzzer

When stationary, the warning light shows when a door, the boot or the charging flap is open or not closed properly. The warning light ***5*** indicates that the door or the boot is open or not properly closed.

When the vehicle reaches a speed of approximately 12 mph (20 km/h), the warning lights and ***5*** are accompanied by a message indicating that the opening element is open or not properly closed.

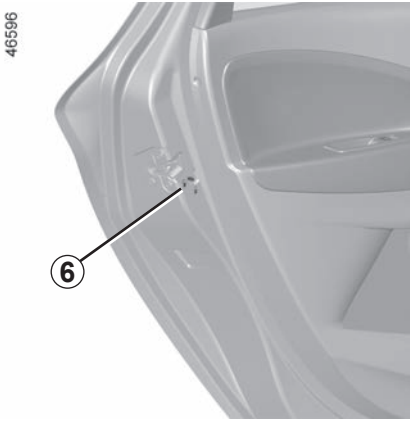

Special note

Once the engine has been switched off, the lights and accessories (radio, etc.) will continue to operate until the driver's door is opened.

Child safety

To make it impossible for the rear doors to be opened from the inside, move the lever ***6*** and check from the inside that the doors are securely locked.

Driver's responsibility when parking or stopping the vehicle

Never leave an animal, child or adult who is not self-sufficient alone on your vehicle, even for a short time.
They may pose a risk to themselves or to others by starting the engine, activating equipment such as the electric windows or by locking the doors.
Also, in hot and/or sunny weather, please remember that the temperature inside the passenger compartment increases very quickly.
RISK OF DEATH OR SERIOUS INJURY.

If the card does not work:

In certain cases, the card may not work:

– when the card battery is drained, flat battery, etc.

– due to the use of electronic devices near to the remote control (e.g. mobile telephone);

– vehicle located in a high electromagnetic radiation zone.

It is then possible:

– to use the key that is built into the card;

– to lock each of the doors manually;

– to use the interior door locking/unlocking control (refer to the following pages).

The card's built-in key

The integrated ***2*** key is used to lock or unlock the front left-hand door if the card does not work.

Access with key 2

Slide the rear casing ***1*** downwards while pressing on zone ***A***.

Using the key integrated in the card

Insert the key ***2*** into the lock of the front left-hand door and lock or unlock.

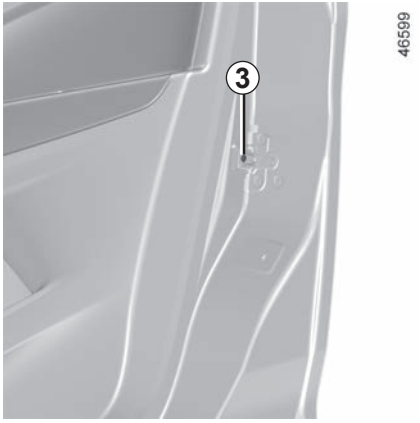

Locking the doors manually

Turn screw ***3*** with the door open (using the end of the key) and close the door.

This means that the doors are then locked from the outside.

The doors may then only be opened from the inside or by using the key in the front left-hand door.

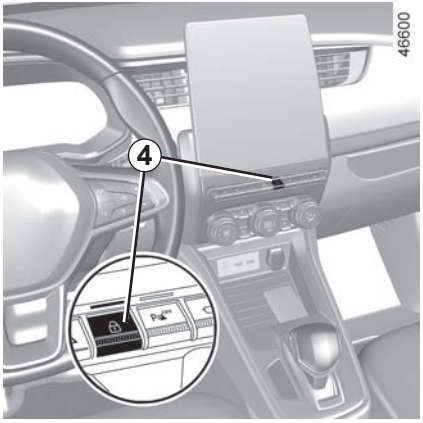

Interior locking/unlocking door control

Switch ***4*** simultaneously controls the doors and the tailgate.

If a door or the tailgate is open or not closed properly, the doors and tailgate lock/unlock quickly.

If transporting an object with the tailgate open, you can still lock the doors: **with the ignition off,** press and hold switch ***4*** for more than five seconds to lock the other opening elements.

Door and tailgate status indicator

When the ignition is on, the indicator light above the ***4*** switch informs you of the locking status of the opening elements:

– indicator light on, the doors and tailgate are locked,

– indicator light off, the doors and tailgate are unlocked.

If the ignition is off, when you lock the doors the warning light remains lit for some time before disappearing.

After locking/unlocking the vehicle using the buttons on the card, remote locking and hands-free unlocking are deactivated.

To reactivate the “hands-free” mode: restart the vehicle.

Locking the doors without the card

For example, in the event of a discharged battery or the card temporarily not working, etc.

With the engine switched off and an opening (door or boot) open, press and hold the switch ***4*** for more than five seconds.

When the door is closed, all the doors and tailgate will be locked.

Note: unlocking the vehicle from the outside is only possible with the card in the vehicle’s access zone or using the key integrated in the card.

Never leave your vehicle with the card inside.

Driver’s responsibility

If you decide to keep the doors locked when you are driving, remember that it may be more difficult for those assisting you to gain access to the passenger compartment in the event of an emergency.

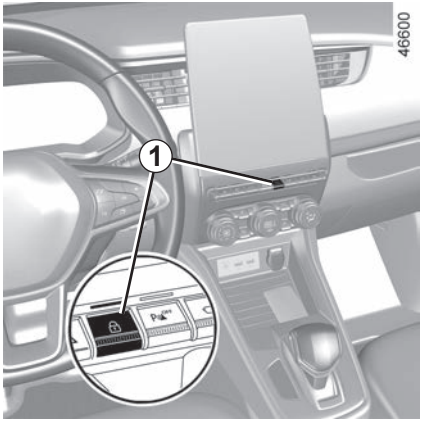

Operating principle

After the vehicle is started, the system automatically locks the doors when you are driving at approximately 6 mph (10 km/h) and over.

The door can be unlocked:

– by pressing the button ***1*** to unlock the doors;

– with the vehicle stationary, by opening a front door from inside the vehicle.

Activating/deactivating the function

With the engine running, press the button ***1*** for approximately 5 seconds, until you hear a warning beep.

NB: if a door is opened or closed, it will automatically lock again when the vehicle reaches a speed of 6 mph (10 km/h).

Driver's responsibility

If you decide to keep the doors locked when you are driving, remember that it may be more difficult for those assisting you to gain access to the passenger compartment in the event of an emergency.

Operating faults

If you experience an operating fault (no automatic locking, the indicator light incorporated in button ***1*** does not light up when trying to lock the opening elements, etc.), firstly check that the opening elements are properly closed. If they are properly closed, contact an authorised dealer.

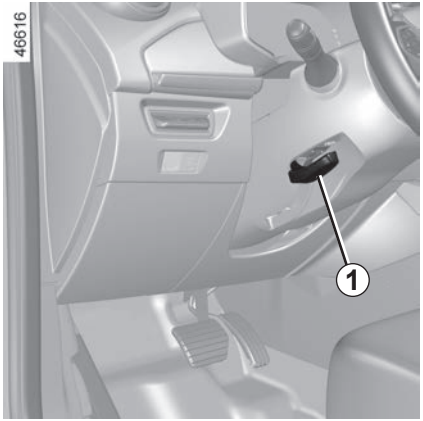

Adjusting the steering wheel height and depth

Lower the lever ***1*** and position the steering wheel in the required position.

Then, raise the lever fully, beyond the point of resistance to lock the steering wheel.

Make sure that the steering wheel is correctly locked.

For safety reasons, only adjust the steering wheel when the vehicle is stationary.

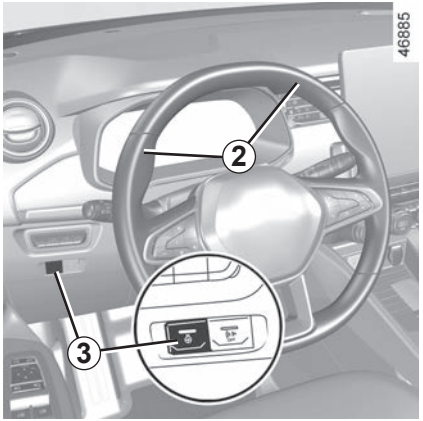

Steering wheel heating

(depending on vehicle)

This function heats the steering wheel ***2***.

Operating principle

When the temperature is reached, the function regulates the temperature of the heated areas for approximately 30 minutes and then switches off automatically.

Activating the function

With the ignition on, press switch ***3***, the indicator light in the switch lights up.

Deactivating the function

- Automatic:

The function switches off automatically after the regulation phase of approximately 30 minutes. The indicator light in switch ***3*** goes out.

Note: if the function has switched off automatically, press the switch ***3*** twice to reactivate it.

If switch ***3*** is not pressed again, the function will be reactivated the next time the ignition is switched on.

- Manually:

To deactivate the function during the regulation phase, press the switch ***3***. The indicator light in switch ***3*** goes out.

Power-assisted steering

The variable power-assisted steering system is equipped with an electronic control system which alters the level of assistance to suit the vehicle speed.

Steering is made easier during parking manoeuvres (for added comfort) while the force needed to steer increases progressively as the speed rises (for enhanced safety at high speeds).

Never switch off the ignition when travelling downhill, and avoid doing so in normal driving (assistance is not provided).

Never leave the steering wheel on full lock when the vehicle is stationary.

With the engine switched off, or if there is a system fault, it is still possible to turn the steering wheel. The force required will be greater.

A noise may be heard when the steering wheel is moved quickly. This is normal.

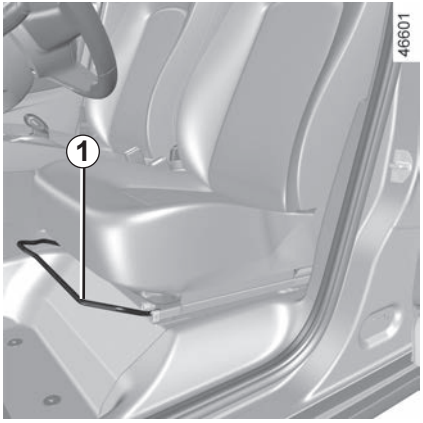

To move the seat forwards or back

Lift handle ***1*** to unlock. Release the handle once the seat is in the correct position and ensure that the seat is fully locked into position.

After making adjustments, make sure that the seatbacks are correctly locked in place

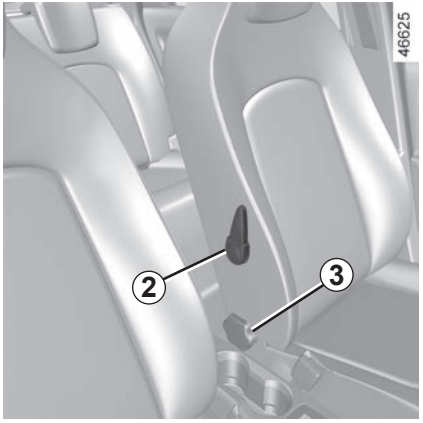

To adjust the lumbar support on the driver's seat

(depending on vehicle)

Lower handle ***2*** to increase the support and lift it to decrease it.

To tilt the seatback

Turn control knob ***3*** to the required position.

For safety reasons, carry out any adjustments when the vehicle is not being driven.

We would advise you not to recline the seatbacks too far to ensure that the effectiveness of the seat belts is not reduced.

No object should be placed on the floor (in front of the driver). Nothing should be placed around the driver's feet as such objects may slide under the pedals during sudden braking manoeuvres and obstruct their use.

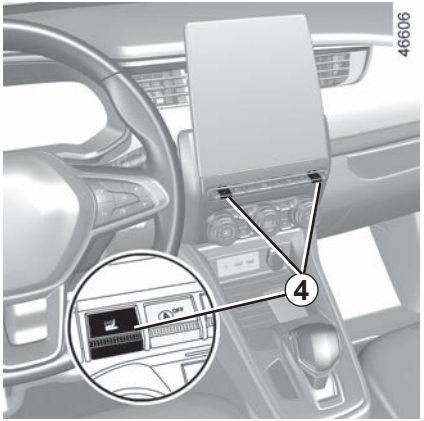

Heated seats

With the ignition on:

– Pressing the switch ***4*** on the required seat for the first time activates the heating system on high. Both integrated switch warning lights come on;

– pressing the switch for the second time changes the heating to low. One integrated warning light comes on;

– pressing for the third time turns the heating off.

Operating faults

When an operating fault is detected, the warning lights in the ***4*** switch for the seat concerned switch off after approximately five seconds.

Consult an approved dealer.

Always wear your seat belt when travelling in your vehicle. You must also comply with the legislation of the particular country you are in.

Make sure that the rear bench seat is locked in position correctly so that the rear seat belts will operate correctly. ➥ 3.24.

Incorrectly adjusted or twisted seat belts may cause injuries in the event of an accident.

Use one seat belt per person, whether child or adult.

Even pregnant women should wear a seat belt. In this case, ensure that the lap belt is not exerting too much pressure on the abdomen, but do not allow any slack.

Before starting, first adjust your driving position, then ask all occupants to adjust their seat belts to ensure optimum protection.

Adjusting your driving position

- **Sit well back in your seat** (having removed your coat or jacket etc.). This is essential to ensure your back is positioned correctly;
- **adjust the distance between the seat and the pedals.** Your seat should be as far back as possible while still allowing you to fully depress the pedals. The seatback should be adjusted so that your arms are slightly bent when you hold the steering wheel;
- **adjust the position of the steering wheel.**

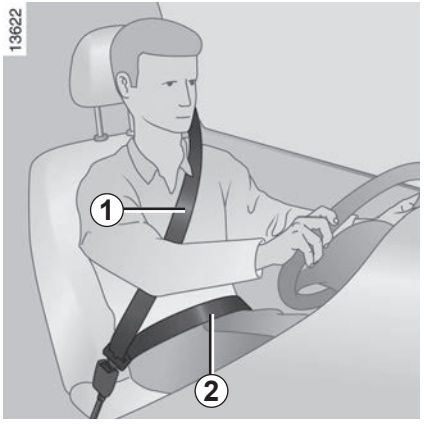

Adjusting the seat belts

For correct adjustment and positioning of the seat belts at all seats:
- adjust the seats (seat position and seatback angle, if available);
- sit with your back firmly against the seatback;

– move the chest strap ***1*** as close as possible to the base of the neck without it actually resting against it (if necessary, adjust the height of the seat belt if available) and make sure that the chest strap ***1*** is in contact with the shoulder;
– position the lap belt ***2*** so that it lies flat on the thighs and against the pelvis.

The belt should be worn so that it is as close as possible to your body, i.e.: avoid wearing heavy clothing or keeping bulky objects under the belts, etc.

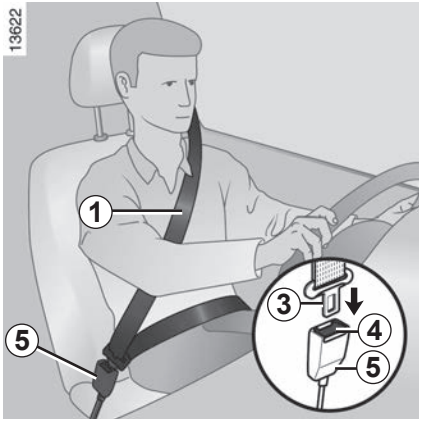

Locking

Unwind the belt **slowly and smoothly** and ensure that buckle ***3*** locks into catch ***5*** (check that it is locked by pulling on buckle ***3***). If the belt jams, allow it to return slightly before attempting to unwind it again.

If your seat belt is completely jammed, pull slowly, but firmly, so that just over 3 cm unwinds. Allow it to return slightly before attempting to unwind it again.

If there is still a problem, contact an approved dealer.

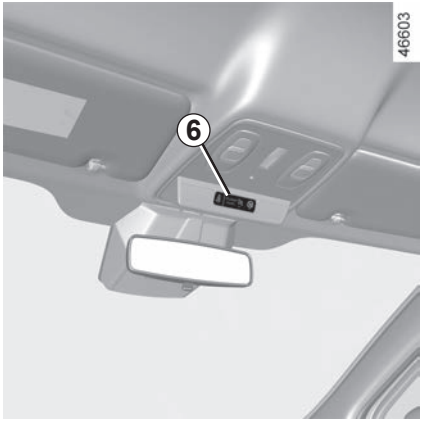

Unlocking

Press button ***4*** and the seat belt will be rewound by the inertia reel. Guide the belt.

Driver's seat belt reminder and, depending on the vehicle, front passenger seat belt reminder

This appears on the central display ***6*** when the ignition is switched on and if the driver's and/or front passenger's seat belt(s) (if the passenger seat is occupied) is not fastened.

Depending on the vehicle, if the seat is occupied and one of the seat belts is not fastened or becomes unfastened while the vehicle is moving at a speed over approximately 12 mph (20 km/h), the warning light flashes and a beep sounds for 120 seconds.

Note: an object placed on the passenger seat base may, in some cases, activate the warning light and an audible warning.

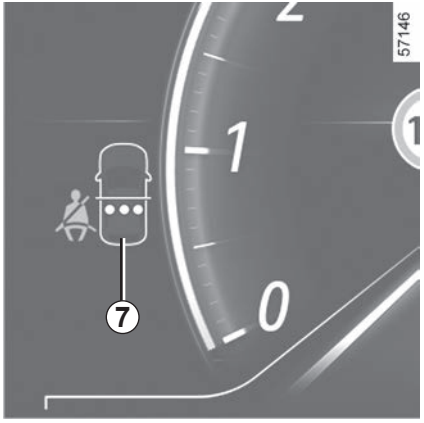

Rear seat belt reminder
(depending on the vehicle)

The graphic ***7*** appears on the instrument panel when the ignition is switched on.
This informs the driver of the fastening status of each of the rear seat belts every time:

– the ignition is switched on;

– opening a door;

– a rear seat belt is fastened or unfastened.

Understanding the graphic ***7***:
– indicator green: seatbelt fastened;
– indicator red: seatbelt unfastened.

When the vehicle speed is below approximately 12 mph (20 km/h), the graphic ***7*** appears during approximately 60 seconds every time one of the rear seat belts is fastened or unfastened.

When the vehicle speed reaches or exceeds 12 mph (20 km/h), if one of the rear seat belts is unfastened during the journey:

– the warning light flashes on the central display;
and
– a beep sounds for around 30 seconds;
and
– the ***7*** symbol is displayed for at least 60 seconds and the symbol for the seat concerned changes to red.

In all cases, ensure that all rear passengers are wearing seat belts and that the number of seat belts shown as fastened matches the number of rear seats occupied.

Adjusting the height of the front seat belts

Press the button ***8*** to adjust the seat belt height, so that the shoulder strap ***1*** is worn as shown previously. Press button ***8*** and raise or lower the seat belt. Make sure that the seat belt is locked in position correctly after you have adjusted it.

Rear side seat belts *9*

The belts are locked, unlocked and adjusted in the same way as the front belts.

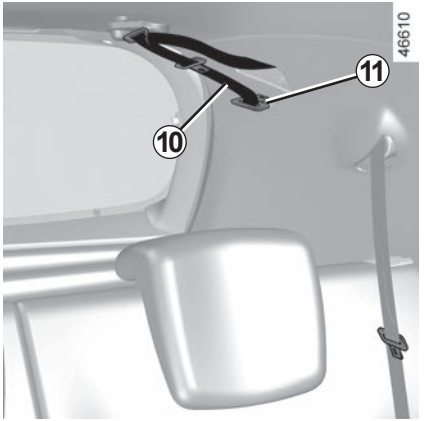

Rear centre seat belt

Unwind belt ***10*** slowly from its housing, then fasten buckle ***11*** into the corresponding black catch ***13***.

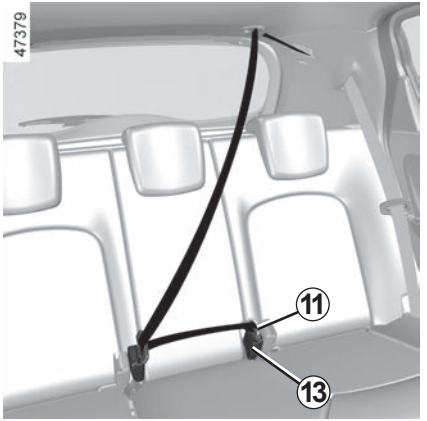

Fasten sliding buckle ***12*** into the corresponding red catch ***14***.

Check that the rear seat belts are positioned and operating correctly each time the rear bench seat is moved.

SEAT BELTS (6/6)

The following information applies to the vehicle's front and rear seat belts.

– No modification may be made to the component parts of the restraint system – belts and seats and their mountings – fitted originally. For special operations (e.g. fitting child seats) contact an approved dealer.

– Do not use devices which allow any slack in the belts (e.g. clothes pegs, clips, etc.): a seat belt which is worn too loosely may cause injury in the event of an accident.

– Never wear the shoulder strap under your arm or behind your back.

– Never use the same belt for more than one person and never hold a baby or child on your lap with your seat belt around them.

– The belt should never be twisted.

– Following an accident, have the seat belts checked and replaced if necessary. Always replace your seat belts as soon as they show any signs of wear.

– When the rear bench seat is being put back, make sure that the seat belts and buckles are correctly positioned so that they can be used properly.

– Make sure that the buckle is inserted into the appropriate catch.

– Ensure that no objects are placed in the area around the seat belt catch as they could prevent it from being properly secured.

– Make sure the seat belt catch is properly positioned (it should not be hidden away, crushed or flattened by people or objects).

METHODS OF RESTRAINT IN ADDITION TO THE FRONT SEAT BELTS (1/6)

They are comprised of:

- **seat belt inertia reel pretensioners;**
- **chest-level load limiters;**
- **airbags anti-submarining;**
- **airbags – Driver and passenger front**

These systems are designed to act independently or together when the vehicle is subjected to a frontal impact.

Depending on the severity of the impact, the system can trigger:

- seat belt locking;
- the seat belt inertia reel pretensioner (which engages to correct seat belt slack);
- the front airbag.

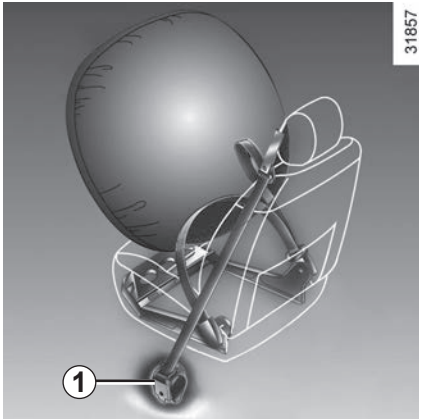

Pretensioners

The pretensioners hold the seat belt against the body, holding the occupant more securely against the seat, thus increasing the seat belt's efficiency.

With the ignition on, following a significant frontal impact and depending on the severity of the impact, the system may trigger the seat belt inertia reel pretensioner ***1***, which instantly retracts the seat belt.

- Have the entire restraint system checked following an accident.
- No operation whatsoever is permitted on any part of the system (pretensioners, airbags, computers, wiring) and the system components must not be reused on any other vehicle, even if identical.
- Only qualified personnel from our Network may work on the airbags; otherwise the system may trigger accidentally and cause injury.
- The electric trigger system may only be tested by a specially trained technician using special equipment.
- When the vehicle is scrapped, contact an approved dealer for disposal of the pretensioner and airbags gas generators.

Load limiter

Above a certain severity of impact, this mechanism is used to limit the force of the belt against the body so that it is at an acceptable level.

Airbaganti-submarining

Located on each of the front seats, it deploys in order to prevent the occupant from sliding under the seat belt.

Driver and passenger front Airbag

Fitted to the driver and passenger side.

The presence of this equipment is indicated by the word “airbag" on the steering wheel, dashboard (in area airbag ***A***) and, depending on the vehicle, a label on the lower section of the windscreen.

Each airbag system consists of:

– an airbag and gas generator fitted on the steering wheel for the driver and in the dashboard for the passenger;

– an electronic unit for system monitoring which controls the gas generator electrical trigger system;

– remote sensors;

– a single warning light on the instrument panel.

The airbag system uses pyrotechnic principles. This explains why, when the airbag inflates, it will generate heat, produce smoke (this does not mean that a fire is about to start) and make a banging noise. In a situation where an airbag is required, it will inflate immediately and this may cause some minor, superficial grazing to the skin or other problems.

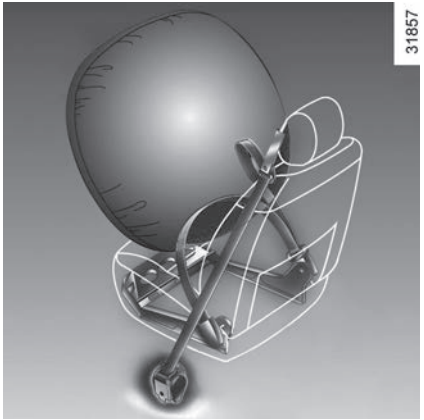

Operation

This system is only operational when the ignition is switched on.

In a severe frontal impact, the airbags inflate rapidly, cushioning the impact of the driver's head and chest against the steering wheel and of the front passenger against the dashboard. The air bags then deflate immediately so that the passengers are not in any way hindered from leaving the vehicle.

Operating faults

This warning light will light up on the instrument panel when the ignition is switched on and then go out after a few seconds.

If it does not light up when the ignition is switched on, or comes on when the engine is running, there is a fault in the system.

Contact your approved Dealer as soon as possible.

Your protection will be reduced until this fault is rectified.

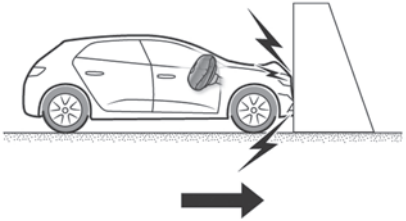

The following conditions will trigger the pretensioners or airbags.

In a frontal impact against a rigid (non-deformable) surface at an impact speed equal to or greater than **16 mph (25 km/h)**.

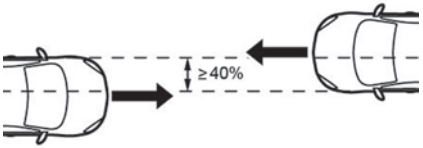

In a frontal impact with another vehicle of an equivalent or higher category, with an impact area equal to or greater than 40%, where the speed of both vehicles is equal to or greater than **25 mph (40 km/h)**.

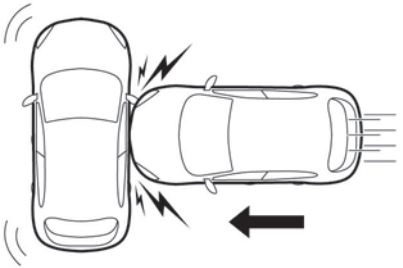

In a side impact with another vehicle of an equivalent or higher category, at an impact speed equal to or greater than **31 mph (50 km/h)**.

METHODS OF RESTRAINT IN ADDITION TO THE FRONT SEAT BELTS (5/6)

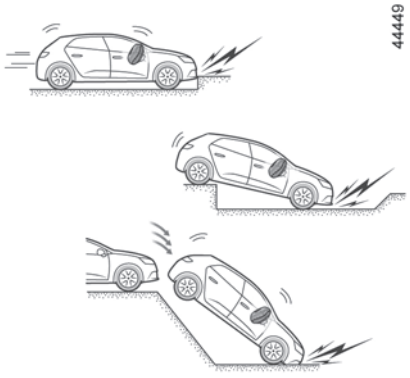

In the following examples, the pretensioners or the airbags could operate:

– impacts to the underside of the vehicle, e.g. from kerbs;

– potholes;

– a fall or a hard landing;

– stones;

– ...

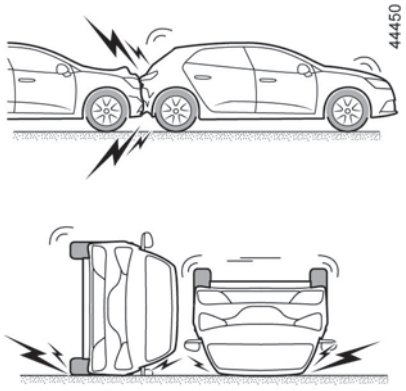

In the following examples, the pretensioners or airbags might not operate:

– rear impact, however severe;

– the vehicle overturning;

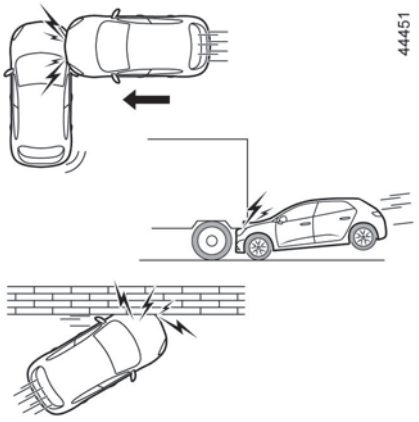

– side impact, affecting the front of the vehicle;

– frontal impact, under the tail of a lorry;

– frontal impact against an obstacle with a sharp angle;

– ...

METHODS OF RESTRAINT IN ADDITION TO THE FRONT SEAT BELTS (6/6)

All of the warnings below are given so that the airbag is not obstructed in any way when it is inflated and also to prevent the risk of serious injuries caused by items which may be dislodged when it inflates.

Warnings concerning the driver's airbag
– Do not modify the steering wheel or the steering wheel boss.

– Do not cover the steering wheel boss under any circumstances.

– Do not attach any objects (badge, logo, clock, telephone holder, etc.) to the steering wheel boss.

– The steering wheel must not be removed (except by qualified personnel from our Network).

– Do not sit too close to the steering wheel: adopt a driving position whereby your arms are slightly folded ➥ 1.41. This will allow sufficient space for the airbag to deploy correctly and be fully effective.

Warnings concerning the passenger airbag
– Do not attach or glue any objects (badge, logo, clock, telephone holder, etc.) to the dashboard on or near the airbag.

– Do not place anything between the dashboard and the passenger (pet, umbrella, walking stick, parcels, etc.).

– The passenger must not put his or her feet on the dashboard or seat as there is a risk that serious injuries may occur. In general, parts of the body should be kept away from the dashboard (knees, hands, head, etc.).

– The devices in addition to the front passenger seat belt should be reactivated as soon as a child seat is removed, to ensure the protection of the passenger in the event of an impact.

A REAR-FACING CHILD SEAT MUST NOT BE FITTED TO THE FRONT PASSENGER SEAT UNLESS THE RESTRAINT SYSTEMS IN ADDITION TO THE FRONT PASSENGER SEATBELT ARE DEACTIVATED ➥ 1.71.

Warnings concerning the anti-submarining airbag
Do not let a child under the age of 12 sit in this seat. When triggered, the anti-submarining airbag may project objects left on the seat base with a great deal of force.
Risk of serious injury.

Force limiter

Above a certain severity of impact, this mechanism is used to limit the force of the belt against the body so that it is at an acceptable level.

– Have the entire restraint system checked following an accident.

– No operation whatsoever is permitted on any part of the system (airbags, electronic units, wiring) and the system components must not be reused on any other vehicle, even if identical.

– Only qualified personnel from our Network may work on the airbags; otherwise the system may trigger accidentally and cause injury.

Side Airbags

This airbag is fitted to the front seats, activated at the sides of the seats (door side) to protect the occupants in the event of a severe side impact.

Depending on the vehicle, a marking on the windscreen informs you of the presence of additional means of restraint (airbags, pretensioners, etc.) in the passenger compartment.

Warning relating to the side airbag

– **Fitting seat covers:** seats equipped with an airbag require covers specifically designed for your vehicle. Contact an approved dealer to find out if these covers are available. The use of any covers other than those designed for your vehicle (including those designed for another vehicle) may affect the operation of the airbags and reduce your protection.

– Do not place any accessories, objects or even pets between the seatback, the door and the internal fittings. Do not cover the seatback with objects such as clothes or accessories. This may prevent the airbag from operating correctly or cause injury when the airbag is deployed.

– No work or modification whatsoever may be carried out on the seat or internal fittings, except by qualified personnel from an approved dealer.

– The space between the seatback of the rear bench seat and the trim is the area of airbag operation: no objects must be placed here.

ADDITIONAL METHODS OF RESTRAINT

All of the warnings below are given so that the airbag is not obstructed in any way when it is inflated and also to prevent the risk of serious injuries caused by items which may be dislodged when it inflates.

The airbag is designed to complement the action of the seat belt. Both the airbag and the seat belt are integral parts of the same protection system. It is therefore essential to wear seat belts at all times. If seat belts are not worn, the occupants are exposed to the risk of serious injury in the event of an accident. It may also increase the risk of minor superficial injuries occurring when the airbag is deployed, although such minor injuries are always possible with airbags.

If the vehicle should overturn or suffer a rear impact, however severe, the pretensioners and airbags are not always triggered. Shocks to the underbody of the vehicle, from pavements, potholes, stones etc. can all trigger these systems.

– Work and modifications on the complete airbag system (airbags, pretensioners, ECU, wiring harness, etc.), are **strictly prohibited** (except by qualified Network personnel).
– To ensure that the system is in good working order and to avoid accidental triggering of the system which may cause injury, only qualified Network personnel may work on the airbag system.
– As a safety precaution, have the airbag system checked if your vehicle has been involved in an accident, or is stolen or broken into.
– When selling or lending the vehicle, inform the user of these points and hand over this driver’s handbook with the vehicle.
– When scrapping your vehicle, contact your approved dealer for disposal of the gas generator(s).

Carrying children

Please ensure that you comply with the legislation of your country.

Children, and adults, must be correctly seated and strapped in for all journeys. The children being carried in your vehicle are your responsibility.

A child is not a miniature adult. Children are at risk of specific injuries as their muscles and bones have not yet finished growing. The seat belt alone would not provide suitable protection. Use an approved child seat and ensure you use it correctly.

To prevent the doors being opened, use the “Child lock” feature. ➥ 1.31.

A collision at 30 mph (50 km/h) is the same as falling a distance of 10 metres. Transporting a child without a restraint is the equivalent of allowing him or her to play on a fourth-floor balcony without railings.

Never travel with a child held in your arms. In the event of an accident, you will not be able to keep hold of the child, even if you yourself are wearing a seat belt.
If your vehicle has been involved in a road accident, replace the child seat and have the seat belts and ISOFIX anchorage points checked.

Driver’s responsibility when parking or stopping the vehicle

Never leave an animal, child or adult who is not self-sufficient alone on your vehicle, even for a short time.

They may pose a risk to themselves or to others by starting the engine, activating equipment such as the electric windows or by locking the doors.

Also, in hot and/or sunny weather, please remember that the temperature inside the passenger compartment increases very quickly.

RISK OF DEATH OR SERIOUS INJURY.

Using a child seat

The level of protection offered by the child seat depends on its ability to restrain your child and on its installation. Incorrect installation compromises the protection it offers the child in the event of harsh braking or an impact.

Before purchasing a child seat, check that it complies with the regulations for the country you are in and that it can be fitted in your vehicle. Consult an approved dealer to find out which seats are recommended for your vehicle.

The regulations on transporting children are specific to each country. The use of a child seat depends on the age and/or the size and/or weight of the child.

For children who do not need to be transported in a child seat, make sure that the seat belt is correctly adjusted and fastened.

In all cases, you must comply with the regulations of the particular country you are in.

Before fitting a child seat, read the manual and respect its instructions. If you experience any difficulties during installation, contact the manufacturer of the equipment. Keep the instructions with the seat.

Set a good example by always fastening your seat belt and teaching your child:
- to strap themselves in correctly;
- to always get in and out of the car at the kerb, away from busy traffic.

Do not use a second-hand child seat or one without an instruction manual.

Check that there are no objects in the vicinity of the child seat which could impede its operation.

Never leave a child unattended in the vehicle.

Check that your child is always strapped in and that the belt or safety harness used is correctly set and adjusted. Avoid wearing bulky clothing which could cause the belts to slacken ➥ 1.41.

Never let your child put their head or arms out of the window.

Check that the child is in the correct position for the entire journey, especially if asleep.

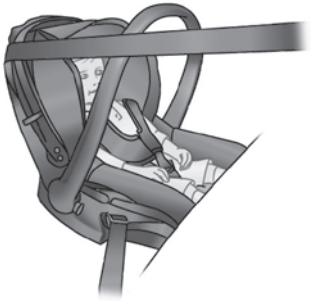

Rear-facing child seats

A baby's head is, proportionally, heavier than that of an adult and its neck is very fragile. Transport the child in this position for as long as possible (until the age of 2 at the very least). It supports both the head and the neck.

Choose a bucket type seat for best side protection and change it as soon as the child's head is higher than the shell.

Forward-facing child seats

Up to 18 kg or 4 years, the child may travel on a forward-facing seat. Choose your seat according the child's size: their head and abdomen are the areas which must be most protected. A forward-facing child seat which is firmly attached to the vehicle will reduce the risk of impact to the head. Ensure your child travels in a forward-facing seat with a harness for as long as their size permits.

Choose a bucket type seat for optimum side protection.

Booster cushions

From 15 kg or 4 years, the child can travel using a booster seat, which will enable the seat belt to be adapted to suit his/her size and shape. The booster seat cushion must be fitted with guides to position the seat belt on the child's thighs rather than the stomach. It is recommended that you use a seat-back fitted with a belt strap guide which can be adjusted in terms of height to position the seat belt in the centre of the shoulder. It must never rest on the neck or on the arm.

Choose a bucket type seat for optimum side protection.

CHILD SAFETY: choosing a child seat mounting (1/3)

There are two ways of attaching child seats: via the seat belt or using the ISOFIX system.

Attachment via the seat belt

The seat belt must be adjusted to ensure that it is effective in the event of harsh braking or an impact.

Ensure that the strap paths indicated by the child seat manufacturer are respected.

Always check that the seat belt is correctly fastened by pulling it up, then pulling it out fully whilst pressing on the child seat.

Check that the seat is correctly held by moving it from side to side and back to front: the seat should remain firmly fixed.

Check that the child seat has not been installed at an angle and that it is not resting against a window.

Do not use the child seat if it may unfasten the seat belt restraining it: the base of the seat must not rest on the buckle and/or catch of the seat belt.

The seat belt must never be twisted or the tension relieved. Never pass the shoulder strap under the arm or behind the back.
Check that the seat belt has not been damaged by sharp edges.
If the seat belt does not operate normally, it will not protect the child. Consult an approved dealer. Do not use this seat until the seat belt has been repaired.

Attachment using the ISOFIX system

Authorised ISOFIX child seats are approved in accordance with regulation ECE-R44 in one of the three following scenarios:
– universal ISOFIX 3-point forward-facing seat;
– semi-universal ISOFIX 2-point seat;
– specific.

For the latter two, check that your child seat can be installed by consulting the list of compatible vehicles.

Attach the child seat with the ISOFIX locks, if these are provided. The ISOFIX system allows quick, easy, safe fitting.

The ISOFIX system consists of 2 rings and, in some cases, a third ring.

No modifications may be made to the component parts of the restraint system (ISOFIX seat belts, seats and their mountings) originally fitted.

Before using an ISOFIX child seat that you purchased for another vehicle, check that its installation is authorised. Consult the list of vehicles which can be fitted with the seat from the equipment manufacturer.

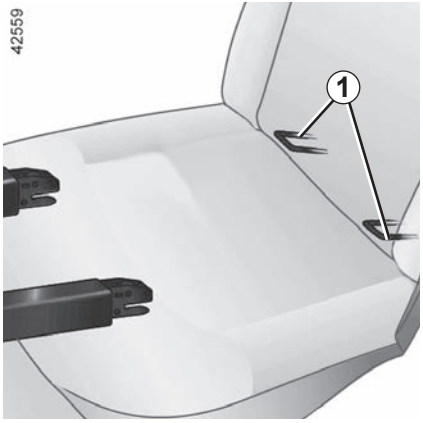

The two rings ***1*** are located between the seatback and the seat base and are identified by the marking.

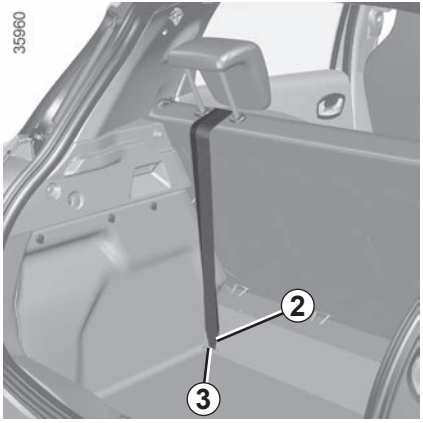

The third ring is used to attach the upper strap on some child seats: you **must** attach hook ***2*** to ring ***3*** for a rear seat and ring ***4*** for a front seat.

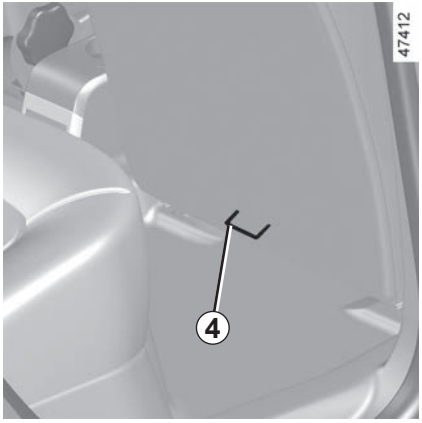

Pull the belt so that the back of the child seat comes into contact with the back of the vehicle seat.

Note: it is **essential** to use the rings marked with the symbol .

The ISOFIX anchorage points have been exclusively designed for child seats with the ISOFIX system. Never fit a different type of child seat, seat belt or other objects to these anchorage points.

Check that nothing is obstructing the anchorage points.

If your vehicle has been involved in a road accident, have the ISOFIX anchorage points checked and replace your child seat.

Check that the seatback of the forward-facing child seat is in contact with the seatback of the vehicle seat. In this case, the child seat may not always rest on the seat base of the vehicle seat.

The child seat strap **must** be attached to the corresponding ring.

CHILD SAFETY: fitting a child seat: general information (1/2)

Some seats are not suitable for fitting child seats. The diagram on the following page shows you how to attach a child seat.

The types of child seats indicated may not be available. Before using a different child seat, check with the manufacturer that it can be fitted.

Fit the child seat in a rear seat wherever possible.

Check that when installing the child seat in the vehicle it is not at risk of coming loose from its base.

If you have to remove the headrest, check that it is correctly stored so that it does not come loose under harsh braking or impact.

Always attach the child seat to the vehicle even if it is not in use so that it does not come loose under harsh braking or impact.

In the front seat

The laws concerning children travelling in the front passenger seat differ in every country. Consult the legislation in force and follow the indications on the diagram on the following page.

Before fitting a child seat in this seat (if authorised):
- lower the seat belt as far as possible;
- move the seat as far back as possible;
- gently tilt the seatback away from vertical (approximately 25°);
- on equipped vehicles, raise the seat base as far as possible.

After installing the child seat, when this is possible, you can move the vehicle seat forward if necessary (so as to leave enough space in the rear seats for passengers or other child seats). For a rear-facing child seat, do not let it touch the dashboard or move it to the furthest forward position.

Do not change these settings after the child seat is installed.

RISK OF DEATH OR SERIOUS INJURY: before fitting a rear-facing child seat in this seat, make sure that the airbag has been deactivated ➥ 1.71.

In the rear side seat

A carrycot can be installed across the vehicle and will take up at least two seats. Position the child with his or her feet nearest the door.

Move the front seat as far forward as possible to install a rear-facing child seat, then move back the seat in front as far as it will go, although without allowing it to come into contact with the child seat.

For the safety of the child in the forward-facing seat, do not move the seat in front back past the middle of the runner, do not tilt the seatback too far (maximum of 25°) and raise the seat as much as possible.

Always remove the headrest from the rear seat on which the child seat is positioned. ➥ 3.23. If necessary, position the rear seat as far back as possible. This must be done before fitting the child seat. Check that the child seat is resting against the back of the rear seat.

Rear centre seat

Check that the belt is suitable for securing your child seat. Consult an approved dealer.

Make sure the child seat or the child's feet do not prevent the front seat from locking correctly. ➥ 1.39.

A child seat with a floor support must never be installed on the rear centre seat.

RISK OF DEATH OR SERIOUS INJURY.

Installing a booster seat (group 2 or 3)

Check the operation (rolling up) of the seat belt ➥ 1.41.

Adjust the seat belt by positioning:

– the shoulder strap on the child's shoulder without touching the neck;

– the lap belt so that it lies flat on the thighs and against the pelvis.

If necessary, adjust the position of the vehicle seat.

CHILD SEATS: attachment by seat belt (1/3)

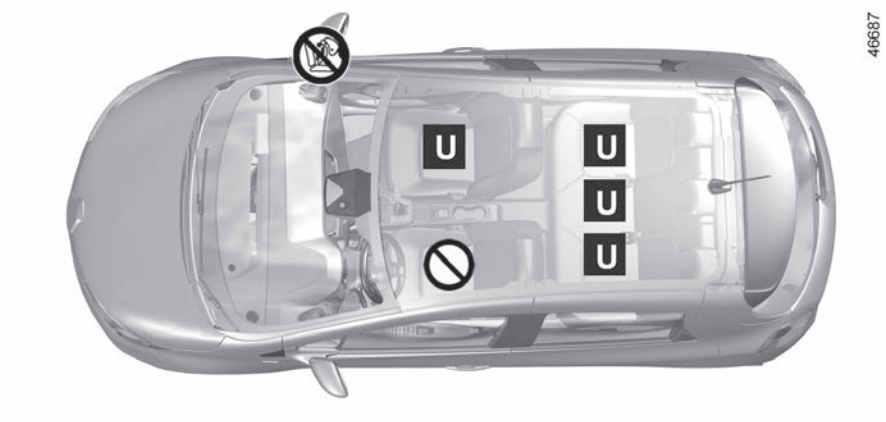

Check the status of the airbag before fitting a child seat or allowing a passenger to use the seat.

Seat not suitable for fitting child seats.

Child seat attached using the belt

U Seat which allows a child seat with “Universal” approval to be attached by a seat belt.

Check that your child is always strapped in and that the belt or safety harness used is correctly set and adjusted ➥ 1.41.

If necessary, adjust the seat position accordingly.

Using a child safety system which is not approved for this vehicle will not correctly protect the baby or child. They risk serious or even fatal injury.

RISK OF DEATH OR SERIOUS INJURY: before fitting a rear-facing child seat in this seat, make sure that the front passenger airbag has been deactivated. ➥ 1.71.

CHILD SEATS: attachment by seat belt (2/3)

The table below summarises the information already shown on the diagram on the previous page, to ensure the regulations in force are respected.

Five-seater version					
Type of child seat	**Weight of the child**	**Front passenger seat**		**Rear side seats**	**Rear centre seat**
		Without airbag or with airbag deactivated	**With airbag activated**		
Carrycot fitted across the vehicle Group 0	< 10 kg	X	X	U (2)	U (2)
Rear-facing shell seat Groups 0 or 0 +	< 10 kg and < 13 kg	U (1) (5)	X	U (3)	U (3) (6)
Shell seat/rear-facing seat Groups 0+ and 1	< 13 kg and 9 to 18 kg	U (1) (5)	X	U (3)	U (3) (6)
Forward-facing seat Group 1	9 to 18 kg	X	U (5)	U (4)	U (4) (6)
Booster seat Groups 2 and 3	15 to 25 kg and 22 to 36 kg	X	U (5)	U (4)	U (4)

(1) RISK OF DEATH OR SERIOUS INJURY: before fitting a rear-facing child seat in this seat, make sure that the front passenger airbag has been deactivated. ➥ 1.71.

CHILD SEATS: attachment by seat belt (3/3)

X = Seat not suitable for fitting child seats of this type.

U = Seat allowing a child seat with “Universal” approval to be attached by the seat belt; check that it can be fitted.

(2) A carrycot can be installed across the vehicle and will take up at least two seats. Position the child with his or her feet nearest the door.

(3) If necessary, position the vehicle seat as far back as possible. In order to install a rear-facing child seat, move the front seat as far forward as possible, then move the front seat back as far as it will go, without allowing it to come into contact with the child seat.

(4) In all situations, remove the rear headrest of the seat on which the child seat is positioned. This must be done before fitting the child seat ➥ 3.23. Move the seat in front of the child forwards, move the seatback forward to avoid contact between the seat and the child’s legs.

(5) Raise the seat to the maximum and position it as far back as possible, tilting the seatback slightly (approximately 25°).

(6) RISK OF DEATH OR SERIOUS INJURY: a child seat with a floor support must never be fitted.

CHILD SEATS: attachment using the ISOFIX system (1/4)

The table below summarises the information already shown on the diagram on the next page, to ensure the regulations in force are respected.

Type of child seat	Weight of the child	Seat size ISOFIX	Front passenger seat		Rear side seats (depending on the vehicle)	Rear centre seat (depending on the vehicle)
			Without airbag or with airbag deactivated	With airbag activated		
Carrycot fitted across the vehicle Group 0	< 10 kg	L1, L2 [F, G]	X	X	IL (2)	X
Rear-facing shell seat Groups 0 or 0 +	< 10 kg and < 13 kg	R1 [E]	IL (1) (3)	X	IL (4)	X
Shell seat/rear-facing seat Groups 0+ and 1	< 13 kg and 9 to 18 kg	R3 [C]	IL (1) (3)	X	X	X
		R2 [D]			IL (4)	
Forward-facing seat Group 1	9 to 18 kg	F3, F2, F2X [A, B, B1],	X	IUF - IL (3)	IUF - IL (4) (5)	X
Booster seat Groups 2 and 3	15 to 25 kg and 22 to 36 kg	B2	X	IUF - IL (3)	IUF - IL (4) (5)	X
i-Size seat			X	X	X	X

CHILD SEATS: attachment using the ISOFIX system (2/4)

X = Seat not suitable for fitting child seats.
IUF/IL = On equipped vehicles, seat which allows a child seat with “Universal/Semi-universal or vehicle-specific” approval to be fitted using the ISOFIX system; check that it can be fitted.

(2) A carrycot can be installed across the vehicle and will take up at least two seats. Position the child with his or her feet nearest the door.

(3) Raise the seat to the maximum and position it as far back as possible, tilting the seatback slightly (approximately 25°).

(4) If necessary, position the vehicle seat as far back as possible. In order to install a rear-facing child seat, move the front seat as far forward as possible, then move the front seat back as far as it will go, without allowing it to come into contact with the child seat.

(5) In all situations, remove the rear headrest of the seat on which the child seat is positioned. This must be done before fitting the child seat ➥ 3.23. Move the seat in front of the child forwards, move the seatback forward to avoid contact between the seat and the child’s legs.

The size of the ISOFIX child seat is indicated by a letter:

– F3, F2, F2X [A, B, B1]: for forward-facing seats in Group 1 (9 to 18 kg);
– B2: boosters in groups 2 and 3 (15 to 25 kg and 22 to 36 kg);
– R3, R2 [C, D]: rear-facing seats or shell seats in group 0+ (less than 13 kg) or group 1 (9 to 18 kg);
– R1 [E]: rear-facing shell seats in group 0 (less than 10 kg) or 0+ (less than 13 kg);
– L1, L2 [F, G]: carrycots in group 0 (less than 10 kg).

CHILD SEATS: attachment using the ISOFIX system (3/4)

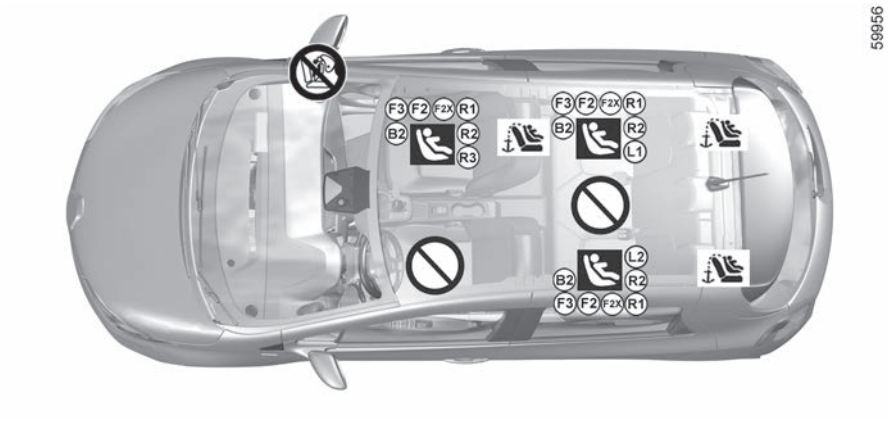

Check the status of the airbag before fitting a child seat or allowing a passenger to use the seat.

Seat which does not allow a child seat to be fitted.

Using a child safety system which is not approved for this vehicle will not correctly protect the baby or child. They risk serious or even fatal injury.

RISK OF DEATH OR SERIOUS INJURY:
before fitting a rear facing child seat on the front passenger seat, check that the airbag has been deactivated ➥ 1.71.

Child seat fitted using the ISOFIX mounting

Seat which allows an ISOFIX child seat to be fitted.

The rear seats are fitted with an anchorage point which allows a forward-facing ISOFIX child seat with universal approval to be attached. The anchoring points are located on the passenger seatback for the front seat and on the bench seatback for the rear seats.

Fit the child seat in a rear seat wherever possible.

To install an ISOFIX seat in this seat, unbuckle the seat belt by hand before engaging the bolts.

Fitting a seat ISOFIX in the rear-left seat means the middle seat cannot be used. The central seat belt will no longer be either accessible or useable.

Check that your child is always strapped in and that the belt or safety harness used is correctly set and adjusted ➥ 1.41.

If necessary, adjust the seat position accordingly.

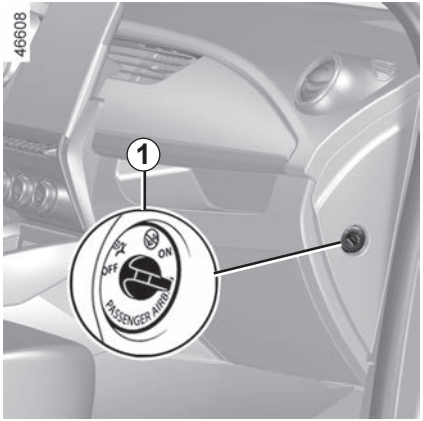

Deactivating the front passenger airbag

Before installing a child seat on the front passenger seat:

– check that the child seat can be installed on this seat;

– it is essential **to deactivate** the airbagfor a rear-facing child seat.

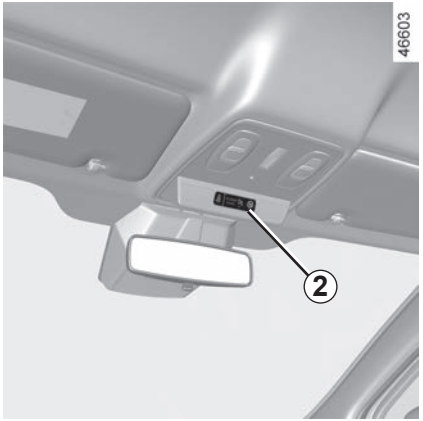

To deactivate the airbag: **with the vehicle stationary and the ignition switched off,**push and turn lock ***1*** to the **OFF** position.

With the ignition on, you **must** check that the warning light on the central display ***2*** is correctly lit and, (depending on the vehicle), that the message “passenger airbag deactivated" is displayed.

This light remains permanently lit to let you know that you can fit a child seat.

The passenger airbag must only be activated or deactivated when the **vehicle is stationary with the ignition off**.
If it is interfered with when the vehicle is being driven, indicator lights and will come on.
Switch the ignition off then on again to reset the airbag in accordance with the lock position.

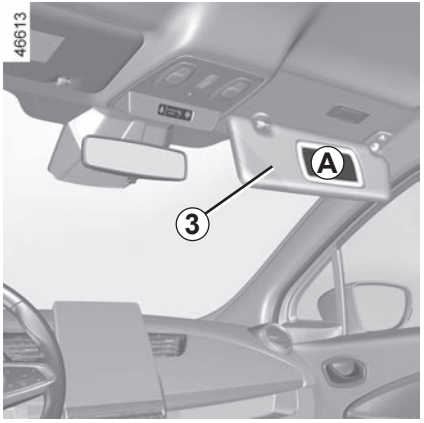

58035 A

The markings on the dashboard and labels ***A*** on each side of the passenger sun visor ***3*** (example: label shown above) remind you of these instructions.

DANGER

Since operation of the front passenger airbag is not compatible with the position of a rear-facing child seat, **NEVER** fit a rear-facing child restraint system in a seat protected by an ACTIVATED front **AIRBAG**. This can lead to the **DEATH** of the **CHILD** or **SERIOUS INJURY**.

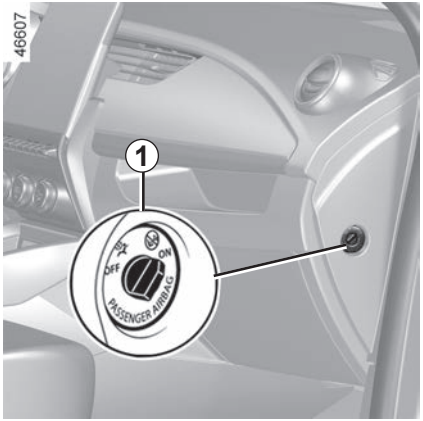

Activating the front passenger airbag

You should reactivate the airbag as soon as you remove the child seat from the front passenger seat to ensure the protection of the front passenger in the event of an impact.

To reactivate the airbag: with the vehicle stationary, ignition off, push and turn the lock ***1*** to the **ON** position.

With the ignition switched on, you **must** check that warning light ***2*** on the display is switched off and that the indicator light appears on the display after each start-up for approximately one minute. The front passenger airbag is activated.

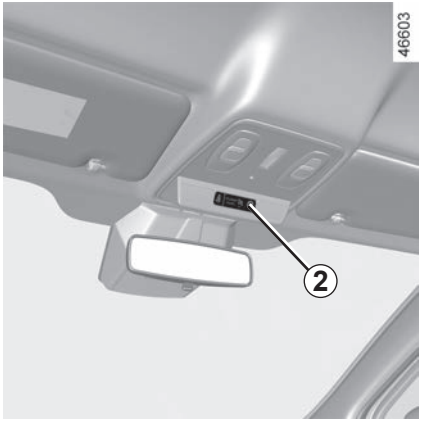

Operating faults

It is forbidden to fit a rear-facing child seat to the front passenger seat if the airbag activation/deactivation system is faulty.

Allowing any other passenger to sit in that seat is not recommended.

Contact your approved dealer as soon as possible.

DANGER

Since operation of the front passenger airbag is not compatible with the position of a rear-facing child seat, **NEVER** fit a rear-facing child restraint system in a seat protected by an ACTIVATED front **AIRBAG**. This can lead to the **DEATH** of the **CHILD** or **SERIOUS INJURY**.

The passenger airbag must only be activated or deactivated when the **vehicle is stationary with the ignition off**.

If it is interfered with when the vehicle is being driven, indicator lights and will come on.

Switch the ignition off then on again to reset the airbag in accordance with the lock position.

DRIVING POSITION: LEFT-HAND DRIVE (1/2)

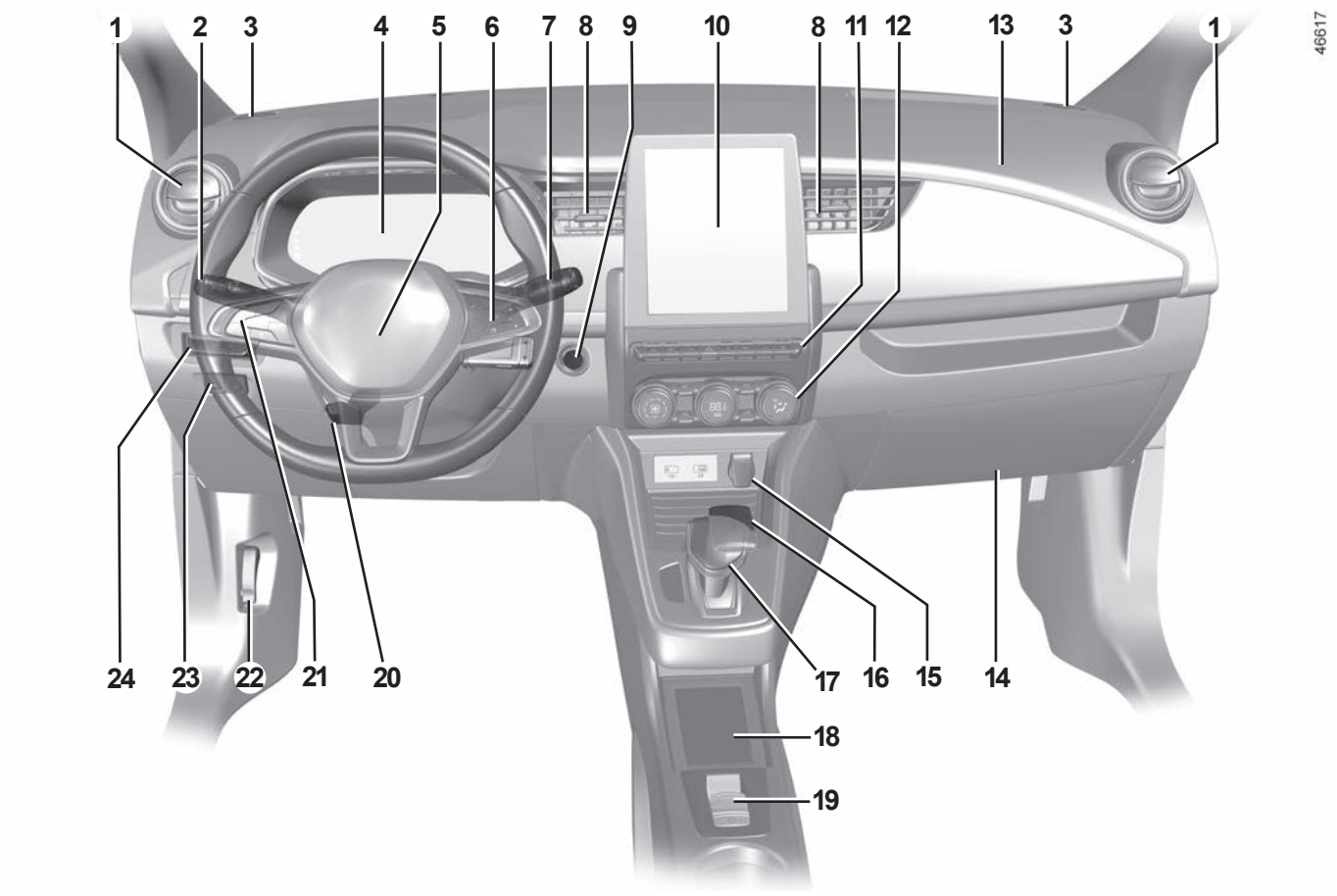

DRIVING POSITION: LEFT-HAND DRIVE (2/2)

The equipment fitted, described below, DEPENDS ON THE VERSION AND COUNTRY.

1 Side air vent.

2 Stalk:
- direction indicator lights;
- exterior lights;
- front fog lights;
- rear fog lights.

3 Speakers.

4 Instrument panel.

5 Steering wheel, driver's airbag location, horn.

6 Controls for:
- on-board computer information read-out and vehicle settings customisation menu,
- telephone remote control;
- voice recognition remote control.

7 Windscreen wiper/washer stalk.

8 Centre air vents.

9 Engine start/stop button.

10 Radio or multimedia screen.

11 Controls for:
- front seat heating;
- activation/deactivation, depending on the vehicle, of the ECO mode;
- hazard warning lights;
- electric door locking;
- activation/deactivation of Park Assist or parking distance control, depending on the vehicle.

12 Air-conditioning control.

13 Passenger airbag location.

14 Glove compartment

15 Accessories and multimedia sockets.

16 Hands-free card holder

17 Selector lever.

18 Charging zone/telephone storage

19 Controls for:
- activating/deactivating the electronic parking brake;
- activation/deactivation of the function autohold.

20 Control for adjusting steering wheel height and reach.

21 Cruise control/speed limiter controls and main switch.

22 Bonnet release control.

23 Controls for:
- heated steering wheel;
- selecting the pedestrian horn sound.

24 Controls for:
- activation/deactivation of Lane Keeping Assist/Lane Departure Warning;
- headlight beam height remote adjustment;
- lighting dimmer for control instruments;
- unlock the charging flap and the charging socket.

DRIVING POSITION: RIGHT-HAND DRIVE (1/2)

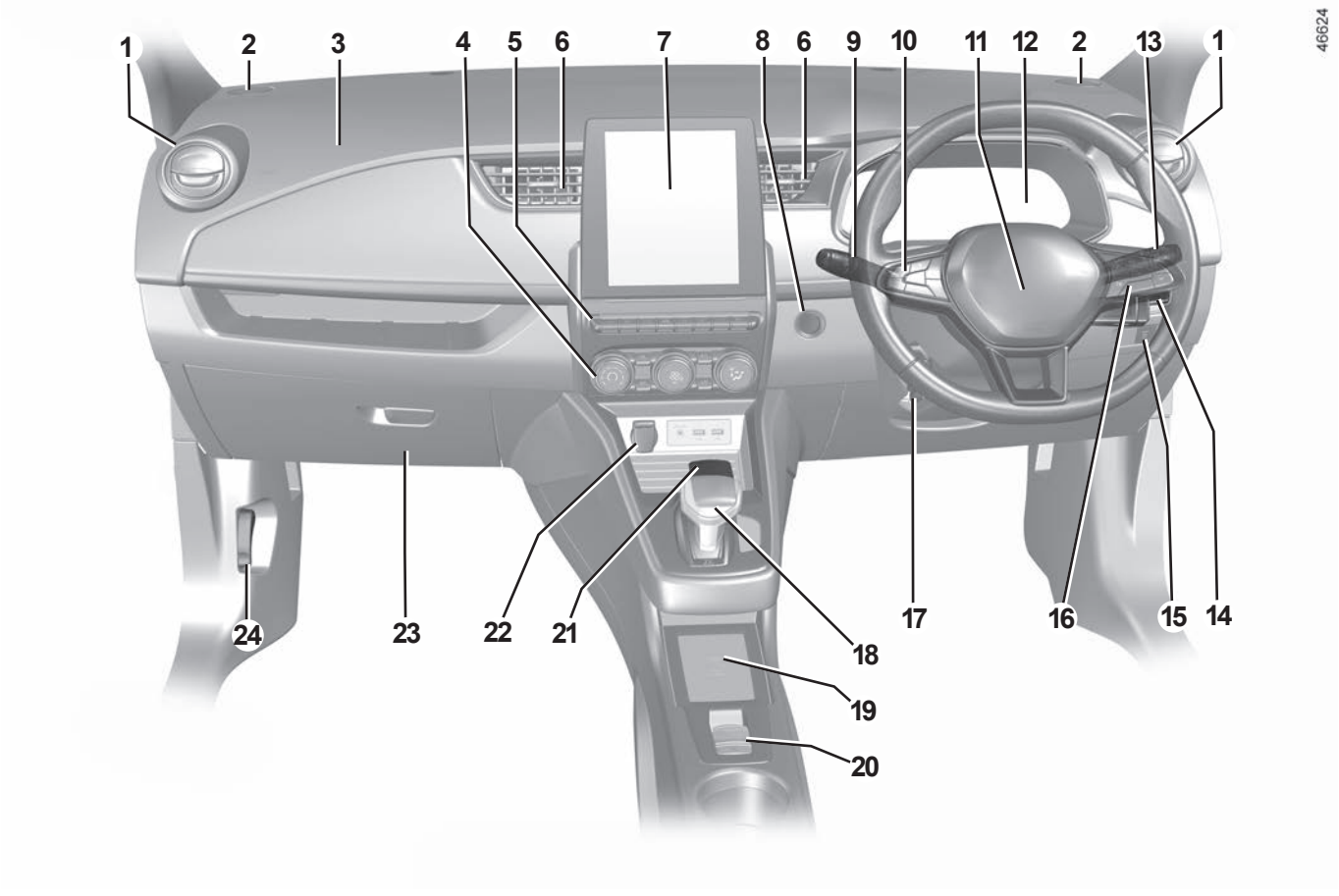

DRIVING POSITION: RIGHT-HAND DRIVE (2/2)

The equipment fitted, described below, DEPENDS ON THE VERSION AND COUNTRY.

1 Side air vent.

2 Speakers.

3 Passenger airbag location.

4 Air-conditioning control.

5 Controls for:
- front seat heating;
- activation/deactivation, depending on the vehicle, of the ECO mode;
- hazard warning lights;
- electric door locking;
- activation/deactivation of Park Assist or parking distance control, depending on the vehicle.

6 Centre air vents.

7 Radio or multimedia screen.

8 Engine start/stop button.

9 Stalk:
- direction indicator lights;
- exterior lights;
- front fog lights;
- rear fog lights.

10 Cruise control/speed limiter controls and main switch.

11 Steering wheel, driver's airbag location, horn.

12 Instrument panel.

13 Windscreen wiper/washer stalk.

14 Controls for:
- activation/deactivation of Lane Keeping Assist/Lane Departure Warning;
- headlight beam height remote adjustment;
- lighting dimmer for control instruments;
- unlock the charging flap and the charging socket.

15 Controls for:
- heated steering wheel;
- selecting the pedestrian horn sound.

16 Controls for:
- on-board computer information read-out and vehicle settings customisation menu,
- telephone remote control;
- voice recognition remote control.

17 Control for adjusting steering wheel height and reach.

18 Selector lever.

19 Charging zone/telephone storage

20 Controls for:
- activating/deactivating the electronic parking brake;
- activation/deactivation of the function autohold.

21 Hands-free card holder

22 Accessories and multimedia sockets.

23 Glove compartment

24 Bonnet release control.

WARNING LIGHTS (1/4)

The presence and operation of the warning lights DEPEND ON THE EQUIPMENT AND COUNTRY.

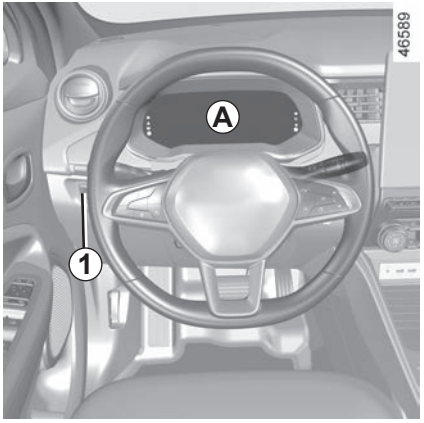

Instrument panel *A*: this comes on when the driver's door is opened. Press or lift the ***1*** switch as many times as required to adjust the intensity.

Warning light means you should drive **very carefully to an authorised dealer as soon as possible**. If you fail to follow this recommendation, you risk damaging your vehicle.

In some cases, the appearance of a warning light is accompanied by a message.

Side light tell-tale light

Dipped beam headlight tell-tale light

Main beam headlight tell-tale light

Automatic main beam headlight indicator light ➥ 1.101

Rear fog light tell-tale light

Left-hand direction indicator tell-tale light

Right-hand direction indicator tell-tale light

The STOP warning light requires you to stop immediately, for your own safety, as soon as traffic conditions allow. Switch off the engine and do not restart it. Call an approved Dealer.

Indicator lightAirbag

This comes on when the ignition is switched on and goes out after a few seconds.

If it does not light up when the ignition is switched on, or if it lights up when the engine is running, it indicates a fault in the system.

Contact your approved Dealer as soon as possible.

Handbrake or assisted parking brake warning light ➥ 2.8

“AUTOHOLD” system warning light ➥ 2.62

If no lights or sounds are apparent, this indicates a fault in the instrument panel. This indicates that it is essential to stop immediately (as soon as traffic conditions allow). Ensure that the vehicle is correctly immobilised and contact an approved Dealer.

WARNING LIGHTS (2/4)

The presence and operation of the warning lights DEPEND ON THE EQUIPMENT AND COUNTRY.

Urgent stop warning light

This lights up when the ignition is switched on and goes out as soon as the engine is started. It comes on with other warning lights and/or messages, and is accompanied by a beep.

It requires you to stop immediately, for your own safety, as soon as traffic conditions allow. Switch off the engine and do not restart it.

Contact an approved Dealer.

Warning light

This lights up when the ignition is switched on and goes out as soon as the engine is started. It can light up in conjunction with other warning lights and/or messages on the instrument panel.

It means you should **drive very carefully** to an approved dealer as soon as possible. If you fail to follow this recommendation, you risk damaging your vehicle.

Warning light

If it appears in red during driving and is accompanied by the STOP indicator light, you must, for your safety, stop as soon as traffic conditions allow. Switch off the engine and do not restart it.

Call an approved Dealer.

If it appears in yellow during driving and is accompanied by the warning light, visit an approved dealer as soon as possible. **Meanwhile, drive with care**. If you fail to follow this recommendation, you risk damaging your vehicle.

Front seat belt reminder warning light

It lights up on the central display when the engine is started then, if the driver's seat belt is not fastened when the vehicle reaches a speed of approximately 12 mph (20 km/h), the light flashes and a beep sounds for about 120 seconds ➥ 1.41.

Door status warning light

➥ 1.31.

The presence and operation of the warning lights DEPEND ON THE EQUIPMENT AND COUNTRY.

Electrotechnical system warning light

It appears when the temperature of the electrical assembly is too high. Stop the vehicle without switching off the ignition. The temperature should lower and the warning light should disappear. If this is not the case, please consult an Authorised Dealer.

The warning light may be accompanied by a reduction in vehicle performance.

Electrotechnical system fault warning light

If it comes on, this indicates an electrotechnical fault related to the electrical assembly (traction battery and electric motor). Contact your approved Dealer straight away.

Electric motor fault warning light

When it comes on, this indicates a fault with the electrotechnical system linked to the electric motor. Contact your approved Dealer straight away.

Traction battery gauge indicator light

This lights up in yellow when the traction battery charge level has reached the reserve threshold ➥ 1.82.

Traction battery fault warning light

If it appears, accompanied by the warning light, this indicates a fault related to the operation of the traction battery. Contact your approved Dealer straight away.

Secondary 12 V battery charge warning light

If it comes on, accompanied by the STOP warning light and a beep, this means that the electrical circuit is overcharged or discharged ➥ 1.8.

Limited performance warning light

This appears when the traction battery temporarily does not deliver its nominal power. During this period, vehicle performance is reduced.

Opt for a smoother driving style until the warning light disappears.

ECO function indicator light

This lights up when ECO mode is activated ➥ 2.13 ➥ 2.16.

Charging cord plugged in warning light

This comes on when the charging lead is plugged into the vehicle ➥ 1.8.

WARNING LIGHTS (4/4)

The presence and operation of the warning lights DEPEND ON THE EQUIPMENT AND COUNTRY.

Anti-lock braking warning light

This lights up when the ignition is switched on and goes out after a few seconds.

If it does not go out after the ignition is switched on, or lights up when driving, there is a fault with the ABS. Braking will then be as normal, without the ABS. Contact an approved Dealer as soon as possible.

Warning light for the electronic stability program (ESC) and traction control system

There are several reasons for the warning light to appear: ➥ 2.30.

Warning light for non-availability of the electronic stability program (ESC) and traction control system

Tyre under-inflation warning light

This lights up when the ignition is switched on or when the engine starts, then disappears after a few seconds ➥ 2.18.

Variable power assisted steering warning light

It lights up when the ignition or the engine is switched on and goes off after a few seconds.

If it comes on while driving, alongside the warning light STOP, this means there is a system fault.
Contact an authorised dealer.

Lane departure system warning light ➥ 2.35

Warning light to indicate a fault or non-availability of active emergency braking ➥ 2.23

Brake circuit fault warning light

If it comes on during braking and is accompanied by the STOP warning light and a beep, it indicates that the fluid level in the circuit is low or that there is a braking system fault. Stop as soon as traffic conditions allow and consult an approved dealer.

Overspeed warning light ➥ 1.82

(Depending on vehicle) Indicator of failure or unavailability of active emergency braking ➥ 2.23

Cruise control and speed limiter indicator lights ➥ 2.53 ➥ 2.57

Charging programme indicator lights ➥ 1.20

Warning lights for air conditioning programming ➥ 3.11

Instrument panel *A*

lights up when the driver's door is opened. In some cases, the appearance of a warning light is accompanied by a message.
Depending on the vehicle, you can customise your instrument panel with the content and colours of your choice.
For vehicles fitted with a multimedia screen, refer to the equipment instructions.
For vehicles not fitted with a multimedia screen ➥ 1.94.

Speedometer *1*
Vehicle speed is limited to approximately 80 mph (135 km/h).

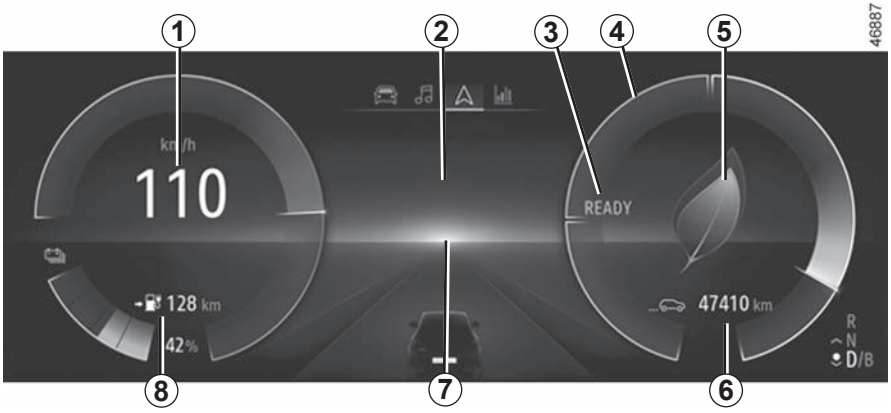

Overspeed buzzer
Depending on the vehicle and country, the warning light is displayed and a beep sounds. This beep sounds as soon as the vehicle is travelling at over 75 mph (120 km/h).
This warning light remains lit for as long as the vehicle is travelling at over 74 mph (120 km/h).

Multimedia information *2*
Depending on the vehicle, you can display information from the multimedia screen (the compass, telephone, navigation etc.).
Please refer to the multimedia instructions for further information.

Message indicating vehicle ready for driving *3*
The **READY** message appears when the engine starts and disappears when the vehicle speed exceeds 3 mph (5 km/h).

Charge meter *4* ➥ 2.13

Driving style indicator *5* ➥ 2.13

Total mileage recorder *6* ➥ 1.87

Trip computer *7* ➥ 1.85

Estimated range *8*.

Remaining charge time *10*

Traction battery charge rate *11*

Opening element warning light *12*

Shows when a door, the tailgate or charging flap is open or not closed properly.

Charge level *13*

The gauge indicates the level of energy remaining.

Charging cord “Plugged In” warning light *14*

This comes on when the charging cord is plugged into the vehicle.

Reserve threshold

When the traction battery charge reaches approximately 7% or, depending on the vehicle, approximately 12%, the gauge and indicator light ***9*** appear in yellow, accompanied by a beep.
To optimise your range ➥ 2.16.

Immobilisation threshold imminent

When the charge level reaches 4.5% or, depending on the vehicle, approximately 6%, a beep is heard and the gauge illuminates in red.
When the charge level reaches 3.5% or, depending on the vehicle, approximately 5%, the range value is no longer displayed. Engine performance gradually decreases until the vehicle comes to a halt ➥ 5.23.

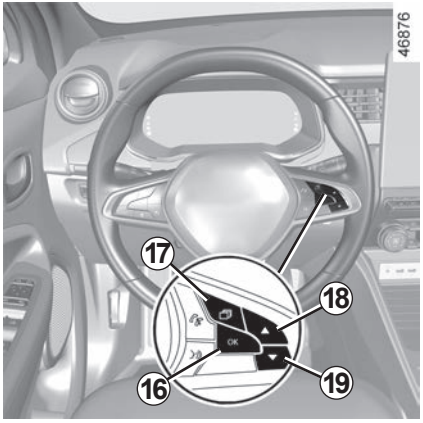

Instrument panel in miles

(option to switch to km/h)

Vehicles not fitted with a multimedia screen

– With the ignition off, press the ***17*** switch as many times as required to reach the vehicle tab ***20***;
– press ***18*** or ***19*** repeatedly to access “Settings”, then press ***16*** “OK”;
– repeat the same operation to access "DASHBOARD", then "Units".

Vehicles fitted with a multimedia screen.

With the vehicle stationary and the engine running, from the multimedia screen, select the “Settings” menu, the “System” tab, then “Units”.

Note: in both cases, once the battery is switched off, the on-board computer automatically returns to the original unit of measurement.

To return to the previous mode, repeat the same operation.

Please refer to the multimedia instructions for more information.

TRIP COMPUTER: general information (1/2)

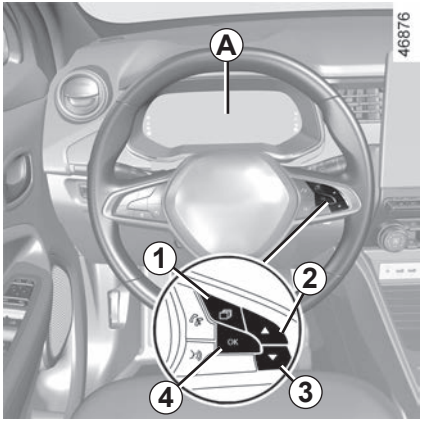

Trip computer *A*

Depending on the vehicle, this includes the following functions:

– distance travelled;
– journey settings;
– information messages;
– operating fault messages (connected to the warning light);
– warning messages (connected to the STOP warning light);
– vehicle settings customisation menu ➥ 1.94.

All these functions are described on the following pages.

Press the ***1*** switch to browse between menus and select functions by repeatedly pressing switch ***2*** or ***3***, then if necessary use the ***4*** switch to confirm “OK”.

From the vehicle tab:

a) journey settings:
   – average energy consumption since the last reset and current energy consumption;
   – distance travelled since the last reset and average speed.

b) reset the tyre pressure;

c) time (depending on the vehicle);

d) service interval;

e) only when stationary, vehicle settings customisation menu ➥ 1.94.

From the message tab:

f) trip log, operating faults and information message readout.

Resetting the journey parameters (reset button)

With one of the trip parameters selected as the display, press and hold the ***4*** switch “OK” until the display resets to zero.

Automatic resetting of the journey parameters

Resetting occurs automatically when the maximum value of any of the parameters is exceeded.

Reading energy consumption values

Some vehicle equipment items consume energy: the energy consumed by the vehicle may therefore differ from the energy consumed on the electric counter.

Interpreting some of the values displayed after resetting

Average energy consumption and speed are all the more stable and meaningful the greater the distance travelled since the last reset.

Resetting the estimated range

After a full recharge of the traction battery, you can select two types of resetting: manual or automatic.

Manual reset
Select one of the trip settings, press and hold switch ***4*** OK to reset the range.

Automatic reset
The range is automatically reset at the end of a full recharge of the traction battery to a value calculated based on the energy consumption over the last 125 miles (200 km).

Some on-board computer information appears on the navigation system display.

The trip settings mileage recorder is reset simultaneously in the on-board computer and the navigation system.

TRIP COMPUTER AND WARNING SYSTEM: journey parameters (1/4)

The display of information shown below DEPENDS ON THE VEHICLE EQUIPMENT AND COUNTRY.

Examples of selections	Interpreting the display selected
Consumption + 13,4 kWh 12,8 kWh	**a) Trip settings.** **Current energy consumption.** **Average energy consumption**. The value is displayed after having travelled at least 400 metres since the last reset.
Journey 42,2 km/h 1284,7 km	**Average speed** since the last reset. The value is displayed after driving 400 metres. **Distance travelled** since the last reset.

TRIP COMPUTER AND WARNING SYSTEM: journey parameters (2/4)

The display of information shown below DEPENDS ON THE VEHICLE EQUIPMENT AND COUNTRY.

Examples of selections	Interpreting the display selected
2.5 2.5 2.5 2.5 + Tyre pressure	**b) Tyre pressure reset** ➥ 2.18
12:00	**c) Clock**

TRIP COMPUTER AND WARNING SYSTEM: journey parameters (3/4)

The display of information shown below DEPENDS ON THE VEHICLE EQUIPMENT AND COUNTRY.

Examples of selections	Interpreting the display selected
Service in 1,210 miles or 3 months	**d) Service interval.** Distance remaining until the next service (displayed in miles/kilometres), then when the service nears, several scenarios are possible: – range less than **930 miles (1,500 km)** or **one month:** the message “Service in” is displayed accompanied by the distance or the time; – when a service is due, the message “Service due” is displayed accompanied by the nearest term (distance or time); – range equal to **0 miles (0 km)** or **date of service reached:** the message “Service Required” is displayed accompanied by the warning light . The vehicle requires a service as soon as possible.

Resetting the display after the service in accordance with the maintenance schedule.
The service interval must only be reset after a service which complies with the recommendations in the maintenance schedule.

Special note: To reset the service interval, press and hold one of the display reset buttons for approximately 10 seconds until the display shows the mileage permanently.

TRIP COMPUTER AND WARNING SYSTEM: journey parameters (4/4)

The display of information shown below DEPENDS ON THE VEHICLE EQUIPMENT AND COUNTRY.

Examples of selections	Interpreting the display selected
Settings (OK)	**e) Vehicle settings personalisation menu** ➥ 1.94**.**
Tailgate open	**f) Trip log.** Successive display: – information messages; – operating fault messages.

TRIP COMPUTER AND WARNING SYSTEM: information messages

These can help in the vehicle starting phase, or give information about a selection or a driving status.
Examples of information messages are given in the following pages.

Examples of messages	Interpreting the display selected
“Disconnect cable to start”	Indicates that the charging cord is still plugged into the vehicle.
“Parking Brake ON”	Indicates that the parking brake has been applied.
“Steering not locked”	Indicates that the steering column has not been locked.
“Earth connection not compliant”	Indicates a fault in the earthing of the charging terminal ➥ 1.8: have the electrical system checked by a qualified professional.
“Check connections”	Unplug, then plug in the vehicle. If the message still shows, this may be caused by the external charging conditions or by the home installation.
“Check charging station”	Indicates a possible electrical fault or a defective charging cable: change the charging terminal or location or have the cable checked.
“Power cut while charging”	Indicates an electrical fault while charging. Restart charging. If this does not work, have the electrical installation checked.
“Charging refused no contract”	Charging prohibited by your battery rental organisation. Rectify the situation.

TRIP COMPUTER AND WARNING SYSTEM: operating fault messages

These appear with the warning light and mean that you should drive very carefully to an authorised dealer as soon as possible. If you fail to follow this recommendation, you risk damaging your vehicle.
They disappear when the display selection key is pressed or after several seconds and are stored in the computer log. The warning light stays on. Examples of operating fault messages are given in the following pages.

Examples of messages	Interpreting the display selected
«WARNING: Check Airbag»	Indicates a fault in the restraint system in addition to the seat belts. In the event of an accident, it is possible that they may not be triggered.
«Check vehicle»	Indicates a fault on one of the pedal sensors or in the 12 V battery management system.
«WARNING: Check Braking System»	Indicates wear or the need to check the braking system.
«Check Vehicle plug»	Indicates overheating at the vehicle-side charging socket. Wait for about 20 minutes and try again. If this does not work, contact an authorised dealer.
«Check Electric System»	Indicates a fault in the traction system.
«Battery charging impossible»	Indicates a fault on the traction battery recharge system.

TRIP COMPUTER AND WARNING SYSTEM: warning message

These appear with the STOP warning light and require you to stop immediately, for your own safety, as soon as traffic conditions allow. Stop your engine and do not restart it. Call an approved Dealer.
Examples of warning messages are given in the following pages. **Note:** the messages appear on the display either individually or alternately (when there are several messages to be displayed), and may be accompanied by a warning light and/or a beep.

Examples of messages	Interpreting the display selected
«WARNING: Braking System»	Indicates a fault in the braking system.
«WARNING: Power Steering»	Indicates a fault in the steering.
«Electric motor failure»	Indicates that the vehicle is losing power.
«WARNING: Electric System»	Indicates a fault in the electric system.
“ Puncture “	Indicates that at least one wheel is punctured or severely underinflated.

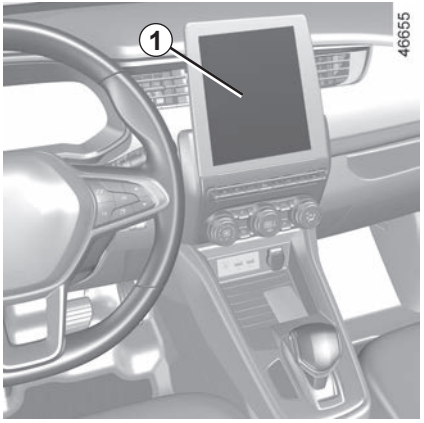

Depending on the vehicle equipment, this function allows you to activate/deactivate and adjust some of the vehicle's functions.

Vehicles fitted with a multimedia screen.

Accessing the settings menu

With the vehicle stationary, engine running, from the multimedia screen ***1*** select the "Settings" menu, then the "Vehicle" tab then the "Car configuration" menu to access the various settings.

Adjusting the settings

Select a tab then the function to be modified (the display depends on the vehicle equipment and country):

a) "Driving":
- Indicator volume.

b) "Access":
- Release driver's door;
- Lock doors during driving;
- Opening/closing in hands-free mode;
- Remote locking/Approach unlocking;
- Distance locking sound;
- Silent mode;
- Automatic locking.

c) "Wiping and lighting":
- Follow-me-home lighting;
- Wiping in reverse;
- Automatic front wiping;
- Wipe after wash.

d) "Welcome":
- External welcome;
- Automatic fold-out of mirrors;
- Interior welcome;
- Courtesy light auto mode.

Depending on the function, select:
- "ON" or "OFF" to activate or deactivate;

or
- a duration to adjust the time the lights are switched on (e.g. for the "Follow-me-home lighting" function).

Please refer to the multimedia instructions for further information.

For safety reasons, carry out any adjustments when the vehicle is not being driven.

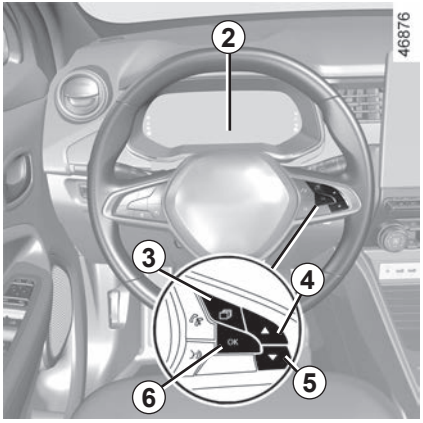

Vehicles not fitted with a multimedia screen

Accessing the settings menu on display *2*

With the vehicle stationary, press switch ***3*** as many times as required to reach the “Vehicle” tab. Press repeatedly on the ***4*** or ***5*** switch to access the “Settings” menu, then confirm by pressing ***6*** “OK”.

Adjusting the settings

Navigate using the ***4*** or ***5*** control to select the function to be modified and press ***6*** “OK” to confirm (display may vary according to vehicle equipment and country):

a) “DASHBOARD”:
- Language;
- Unit;
- Style;
- Colour.

b) “VEHICLE”:
- Rear windscreen wiping in reverse gear;
- Automatic windscreen wiping;
- Front/rear drip wiping function;
- Exterior welcome.

c) “PARKING ASSIST”:
- Beep volume.

d) “DRIVING ASSIST”:
- Lane departure warning sound volume;
- Lane departure warning sensitivity;
- Lane departure warning vibration;
- Lane keeping assist sensitivity;
- Blind spot warning;
- Active braking;
- Speed warning.

e) “LIGHTING”:
- Courtesy light auto mode;
- Automatic follow-me-home lighting;
- Follow-me-home lighting: XX seconds.

f) “ACCESS”:
- Lock doors during driving;
- Opening/closing in hands-free mode;
- Unlock the driver’s door only;
- Automatic re-locking;
- Silent locking;
- Automatic opening/closing;
- Automatic mirror fold-out.

g) “RESET”.

☑ function activated

☐ function deactivated

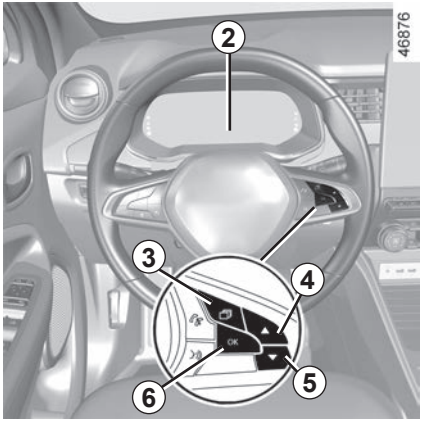

Once a line has been selected, press ***6*** “OK" to adjust the function.

If you select either “PARKING ASSIST” then “VOLUME”, or “DASHBOARD” then “LANGUAGE”, you will have to make a further selection (sound volume of the parking distance control or instrument panel language). In this case, make your selection and confirm it by pressing ***6*** “OK”, the selected value is shown by a ☑ in front of the line.

To exit the menu, press ***4*** or ***5*** to access “BACK” and confirm by pressing ***6*** “OK”. It may be necessary to carry out this operation more than once.

The vehicle settings personalisation menu cannot be used when driving. When driving, the instrument panel display switches automatically to trip computer.

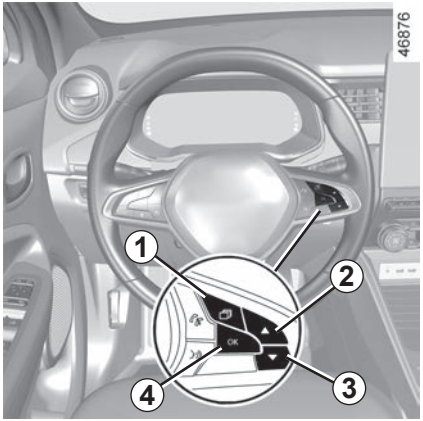

Setting the time

Vehicles not fitted with a multimedia screen

Press the switch ***1*** as many times as required to reach the “Vehicle” tab.

Repeatedly press control ***2*** or ***3*** to set the ***5*** clock.

Press and hold switch ***4*** “OK” until the time display flashes.

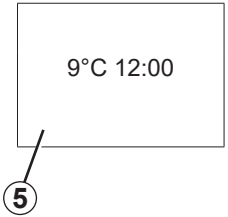

Set the hour using control ***2*** or ***3***, then press switch ***4*** OK to confirm.

Set the minutes using control ***2*** or ***3***, then press switch ***4*** “OK” to confirm.

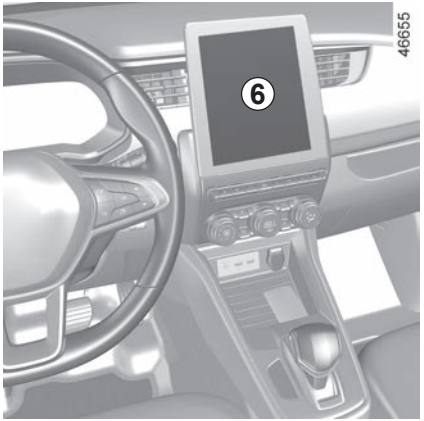

Vehicles fitted with a multimedia screen

The time and exterior temperature are displayed on the multimedia screen ***6***.

Please refer to the multimedia instructions for further information.

External temperature indicator

Special note:

When the outside temperature is – 3°C to + 3°C, the °C characters flash (signalling a risk of ice on the road).

If the power supply is cut (battery disconnected, supply wire cut, etc.), the clock must be reset.

We recommend that you do not adjust these settings while driving.

External temperature indicator

As ice formation is related to climatic exposure, local air humidity and temperature, the external temperature alone is not sufficient to detect ice.

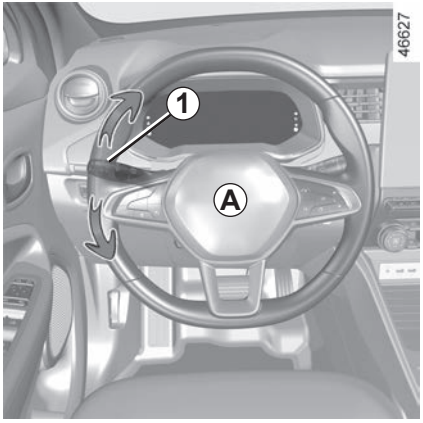

Horn

Press steering wheel boss ***A***.

Headlight flasher

Pull stalk ***1*** towards you to flash the headlights.

Direction indicators

Move stalk ***1*** parallel to the steering wheel and in the direction you are going to turn it.

One-touch mode

Briefly shift the stalk ***1*** upwards or downwards, not exceeding the point of resistance, then release it: the stalk will return to its original position and the direction indicator light concerned will flash three times.

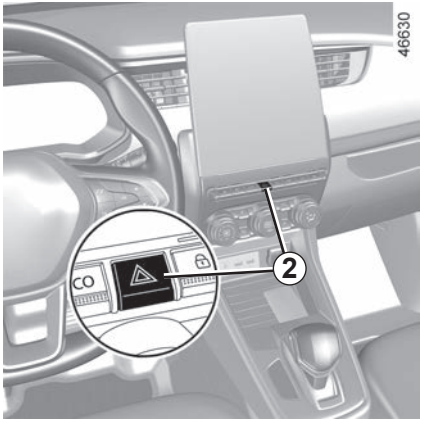

Hazard warning lights

Press switch ***2***. This switch illuminates all four direction indicators and the side-mounted indicator lights simultaneously. It must only be used in an emergency to warn drivers of other vehicles that you have had to stop in an area where stopping is prohibited or unexpected or that you are obliged to drive under special conditions.

PEDESTRIAN HORN

Electric vehicles are particularly quiet.

This system enables you to warn other road users of your presence – especially pedestrians and cyclists.

The system is activated automatically when the engine is started. The sound is triggered when the vehicle speed is between about 1 and 19 mph (1 and 30 km/h).

Warning noise selection

To select the sound:

– with the engine started, engage forward gear (**D** or **B**) or reverse gear (**R**);

– drive at a speed of at least 0.6 mph (1 km/h) to trigger the sound of the pedestrian horn;

– immobilise the vehicle (without switching off the ignition);

– press and hold the switch ***1***. The different sounds offered by the system will sound in succession;

– release the switch ***1*** to select the sound of your choice.

The warning light ***2*** for the switch ***1*** illuminates only in the event of a system failure. In all other cases, it remains off.

Operating faults

When the system detects an operating fault, the warning light ***2*** on the switch ***1*** flashes.

Consult an approved dealer.

Daytime running lights

Your vehicle is fitted with daytime lighting (depending on the version).

The daytime running lights come on automatically with no action on stalk ***1*** when the engine is started, and they go off once the engine is switched off. This must be in AUTO mode.

Side lights

Turn the ring ***2*** until the symbol is opposite mark ***3***. This indicator light on the instrument panel comes on.

Dipped beam headlights

Manual operation
Turn the ring ***2*** until the symbol is opposite mark ***3***. This indicator light on the instrument panel comes on.

Automatic operation
(depending on vehicle)

Turn ring ***2*** until the AUTO symbol is opposite mark ***3***: with the engine running, the dipped beam headlights switch on or off automatically depending on the brightness of the light outside, without any action on stalk ***1***.

Before driving at night, check that the electrical equipment is operating correctly and adjust the headlight beams (if your vehicle is not carrying its normal load). As a general precaution, check that the lights are not obscured (by dirt, mud, snow or objects being transported).

If driving on the left in a left-hand drive vehicle (or vice versa), drivers must have the lights adjusted by an authorised dealer for the duration of the trip.

Main beam headlights

With the engine running and the dipped beam headlights lit, push stalk ***1***. This indicator light on the instrument panel comes on.

To return to the dipped headlight position, pull the stalk ***1*** towards you again.

Automatic main beam headlights

Depending on the vehicle, this system switches the main beam headlights on and off automatically. It uses a camera located behind the interior rear-view mirror to detect vehicles that are being followed and those coming in the opposite direction.

The system may encounter difficulties under certain conditions, including**:**
- extreme weather conditions (rain, snow, fog, etc.);
- obstruction in front of the windscreen or camera;
- when a following or oncoming vehicle has weak or hidden lighting;
- incorrect settings for the front headlights;
- reflective systems;
- ...

The main beam headlights come on automatically if:
- exterior light is weak;
- no other vehicles or lighting are detected;
- the vehicle speed is above approximately 25 mph (40 km/h).

If any of the above conditions are not fulfilled, the system switches to dipped beam headlights.

Note: make sure the windscreen is not obscured (dirt, mud, snow, condensation etc.).

To activate automatic main beam headlights:

Turn ring ***2*** until the AUTO symbol is opposite mark ***3*** and push the stalk ***1***.

Warning light comes on the instrument panel.

Automatic main beam headlights (continued)

To deactivate automatic main beam headlights:

– turn ring ***2*** to a position other than AUTO;

or

– pull the stalk ***1***.

Warning light goes out on the instrument panel.

Operating faults

When the message “Check Automatic Lighting” appears on the instrument panel, the system is deactivated.
Consult an approved dealer.

Using the portable navigation system at night in the windscreen area below the camera may disturb the operation of the “automatic main beam headlights” system (risk of reflection on the windscreen).

The “automatic main beam headlights” system should under no circumstances be used to replace driver attention and responsibility with regard to vehicle lighting and adapting to light, visibility and traffic conditions.

Switching off the lights

The lights will go out automatically when the engine is switched off, the driver's door is opened or the vehicle is locked. In this case, the next time the engine is started the lights will be switched back on according to the position of the ring **2**.

Note: if the fog lights are lit, the lights are not switched off automatically.

Lights-on reminder buzzer

If the lights are on after the engine is switched off, a warning beep sounds when the driver's door is opened to warn you that the lights are still on.

Operating faults

If the "Check lighting" message appears with the warning light and the warning light flashes on the instrument panel, this indicates a lighting fault.

Consult an authorised dealer.

Welcome and goodbye function

(depending on the vehicle)

Once the function is activated, the daytime running lights and the rear side lights will light up automatically upon detection of the card or when the vehicle is unlocked.

They switch off automatically:

– approximately one minute after lighting up;

– when starting the engine based on the position of the lighting stalk;

or

– upon locking the vehicle.

Activating/deactivating the function

With the vehicle stationary, engine running, from the multimedia screen select the "Settings" menu, "Vehicle" tab, the "Car configuration" menu, "Welcome" then "External welcome". Choose "ON" or "OFF" to activate or deactivate the function.

“See-me-home lighting” function

This function enables you to briefly switch on the side lights and dipped beam headlights (e.g. to provide light when opening a gate).

With the engine lights switched off, the ***2*** ring in AUTO, pull the lever ***1*** towards you: the side lights and dipped beam headlights will switch on for approximately 30 seconds along with the and on the instrument panel.

To increase this duration, you may pull the stalk up to four times (total time restricted to approximately two minutes).

On the instrument panel, the message “lighting on _ _ _” followed by the remaining time will appear as confirmation. You can then lock your vehicle.

To switch off the lights before they go out automatically, turn ring ***2*** to any position, then return it to position AUTO.

Front fog lights

Turn centre ring ***4*** on the stalk ***1*** until the symbol faces mark ***3***, then release it.

Operation of the fog lights depends on the exterior lighting position selected, and an indicator light will light up on the instrument panel.

Rear fog light

Turn centre ring ***4*** on the stalk until the symbol faces mark ***3***, then release it.

Operation of the fog lights depends on the exterior lighting selected, and an indicator light will light up on the instrument panel.

To avoid inconveniencing other road users, remember to switch off the rear fog light when it is no longer needed.

When driving in fog or snow, or when transporting objects which are higher than the roof, the headlights do not come on automatically.

The driver remains in full control of switching on the fog lights: the indicator lights on the instrument panel inform you whether the fog lights are lit (indicator light on) or not (indicator light off).

Switching off the lights

Turn the centre ring ***4*** again until mark ***3*** is opposite the symbol for the fog lights that you wish to switch off. The corresponding indicator light on the instrument panel goes out.

The front and rear fog lights switch off when the exterior lights are switched off.

Cornering lights

(depending on vehicle)

Driving in forward gear, whenever the dipped beam headlights are on and under certain conditions (at speed, the steering wheel at an angle, the indicator lights on, etc.), when taking a corner one of the front fog lights will switch on to light the inside of the bend.

In reverse, the two front fog lights switch on automatically.

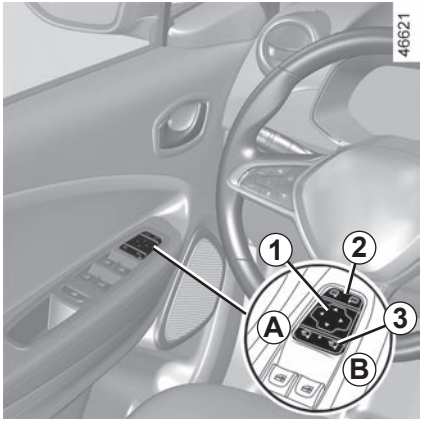

Door mirrors with electrical adjustment:

Select the door mirror using switch ***2***, then use button ***1*** to adjust it to the desired position.

For safety reasons, carry out any adjustments when the vehicle is stationary.

Heated door mirrors

When the engine is started, mirror de-icing is activated with the rear screen de-icing/demisting.

Folding door mirrors

The door mirrors will fold-out automatically when the vehicle is unlocked. The door mirrors fold in when the vehicle is locked.

In any case, you can force fold in or fold out:

– press switch ***3*** in position ***B*** to automatically fold in the door mirrors;
– press switch ***3*** in position ***A*** to automatically fold out the door mirrors.

Objects observed in the door mirror glass are actually closer than they appear.

For your safety, take this into account in order to correctly assess the distance before any manoeuvre.

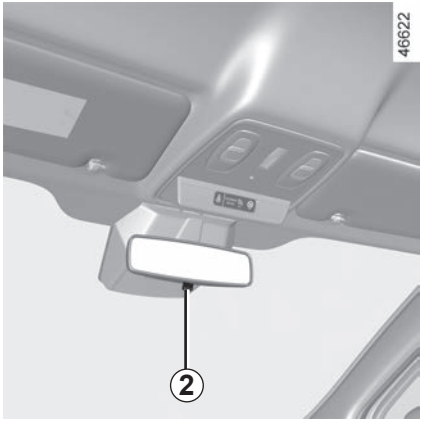

Interior rear view mirror

Its position can be adjusted.

Rear view mirror with lever *2*

When driving at night, to avoid being dazzled by the headlights of the vehicle behind, depress the little lever located behind rear view mirror ***2***.

Rear view mirror without lever *2*

The rear view mirror automatically darkens when you are being followed by a vehicle using main beam headlights or in very bright lighting.

HEADLIGHT BEAM ADJUSTMENT

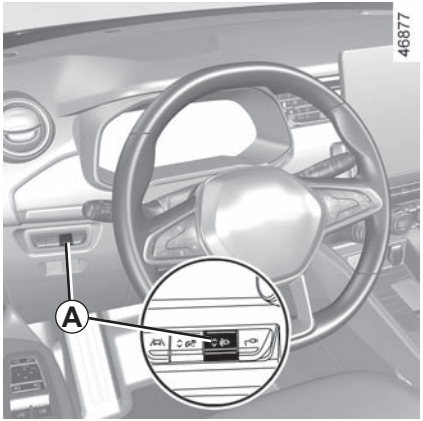

Switch ***A*** is used to adjust the height of the headlight beams according to the load.

With the dipped beam headlights lit, press or lift switch ***A*** as many times as is necessary to select the required position on the instrument panel. The position selected is displayed on the instrument panel for approximately 30 seconds.

Note: lights on, at each engine start-up the selected position is displayed on the instrument panel for approximately 30 seconds.

	Examples of positions for adjusting control *A* according to the load
Driver alone or with front passenger	0
All seats occupied	1
Driver with passengers and luggage (or load) reaching the maximum permissible all-up weight	2
Driver without passengers and luggage (or load) reaching the maximum permissible all-up weight	3

* depending on the vehicle

The table below gives some examples. In all cases, adjust control ***A*** according to the vehicle load so that the road can be seen and other drivers are not dazzled.

If driving on the left in a left-hand drive vehicle (or vice versa), drivers must have the lights adjusted by an authorised dealer for the duration of the trip.

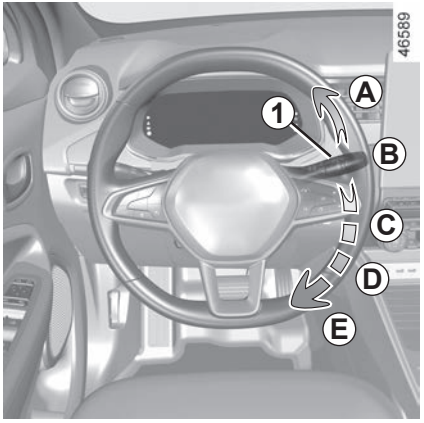

Vehicle fitted with front windscreen wiper rain sensor

The rain sensor is located on the windscreen, in front of the interior rear-view mirror.

A **single sweep**

A short push will trigger one sweep of the wipers.

B **stop**

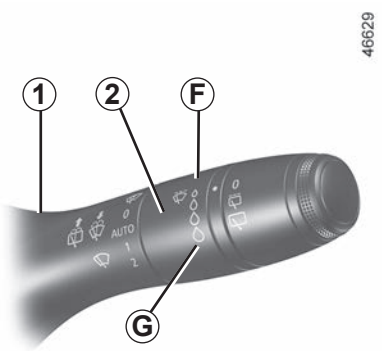

C **automatic wiper function**

When this position is selected, the system detects water on the windscreen and triggers the wipers at a suitable wiping speed. It is possible to change the triggering threshold and the time sweeps by turning ring ***2***:

– ***F***: minimum sensitivity

– ***G***: maximum sensitivity

The higher the sensitivity, the quicker the wipers will react and the faster the wipe.

When activating automatic wiping or when increasing sensitivity, one sweep of the blades is performed.

Note:

– the rain sensor is only intended as a driving aid. In the event of reduced visibility, the driver should manually activate the wipers. In foggy weather or during snowfalls, wiping is not automatically triggered and remains under the driver's control;

– in the event of temperatures below zero, automatic wiping is not activated when the vehicle is started. It is automatically activated as soon as the vehicle exceeds a certain speed (approximately 5 mph (8 km/h));

– do not activate automatic wiping in dry weather;

– fully de-ice the windscreen before activating automatic wiping;

– when washing the vehicle under a roller type car wash, return the ring ***1*** to the ***B*** position to deactivate automatic wiping.

Operating faults

In the event of a malfunction of the automatic wiping, the wiper is set to intermittent wiping. Contact an authorised dealer.

The operation of the rain sensor can be disturbed in the event of:

– damaged windscreen wipers; a film of water or traces left by a blade in the sensor's detection zone may increase the response time of the automatic wiper, or increase the wiping frequency;

– a windscreen with any chip or crack level with the sensor, or a windscreen covered in dust, dirt, insects, ice, the use of washing wax and water-repellent chemicals; the windscreen wiper will be less sensitive or may even not react at all.

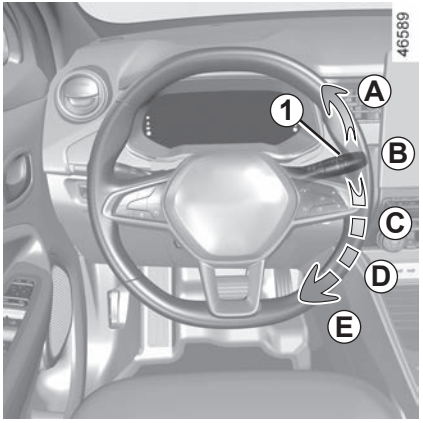

D **slow continuous wiping**

E **fast continuous wiping**

Special note

When driving the vehicle, the wiping speed slows down whenever the vehicle stops. For example, fast wiping speed will slow to normal wiping speed. As soon as the vehicle moves off, wiping will return to the speed originally selected.

If stalk ***1*** is operated, it overrides and cancels the automatic function.

Precautions

– In the event of ice, check whether the blades are stuck to the windscreen before operating the wiping mechanism. If you activate the wipers while the blades are stuck down with ice, you may risk damaging both the blade and the wiper motor.

– Do not activate the wipers on a dry screen. This will lead to premature wear or damage to the blades.

Specific front wiper position (service position)

This position enables the blades to be lifted to remove them from the windscreen.

It may be useful to:

– to clean the blades;

– to release the blades from the windscreen in winter;

– replace the blades ➥ 5.21.

With the ignition on and the engine off, lower the windscreen wiper stalk to position ***E*** (fast continuous wipe). The wiper arms stop in a position away from the bonnet.

To return the blades into position, make sure they have been placed on the windscreen, then move the stalk to position ***B*** (stopped) with the ignition on.

Before switching on the ignition, place the wipers on the windscreen. Otherwise, there may a risk of damage to the bonnet or the wipers when they are switched on.

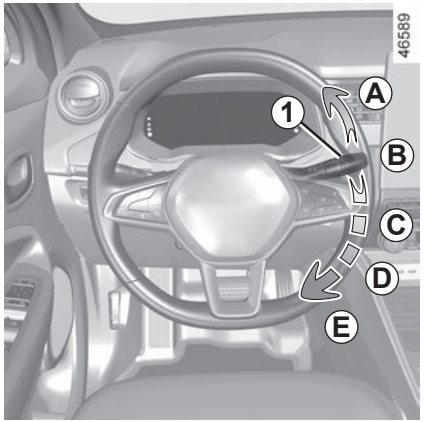

Before any action involving the windscreen (washing the vehicle, de-icing, cleaning the windscreen, etc.) return stalk ***1*** to position ***B*** (stop).

Risk of injury and/or damage.

In the event of obstacles on the windscreen (dirt, snow, ice etc.), clean the windscreen (including the central area located behind the interior rear view mirror) before starting the wipers (risk of motor overheating).

If an object is preventing a blade from moving, it may stop functioning. Remove the obstacle and reactivate the wiper using the wiper stalk.

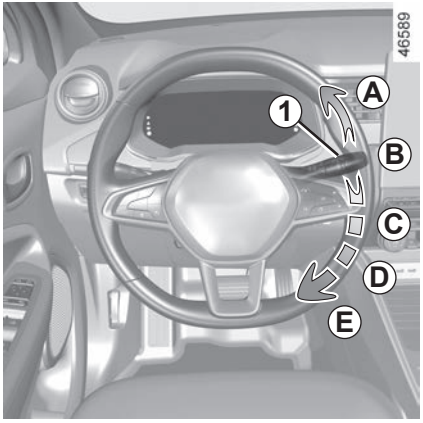

Windscreen washer

With the ignition on, pull stalk ***1*** then release.

A longer pull will trigger, in addition to the windscreen washer, two sweeps of the wipers followed, a few seconds later, by a third.

On vehicles fitted with a multimedia screen, you can choose to activate or disable the third sweep of the blades. ➥ 1.94.

Note: in temperatures below zero, the washer liquid may freeze on the windscreen, reducing visibility. Heat the windscreen using the demister control before cleaning.

When working in the engine compartment, ensure that the windscreen wiper stalk is in position **B** (stop).

Risk of injury.

Efficiency of a wiper blade

Check the condition of the wiper blades. How long they last depends on you:

– it must remain clean: clean the blade and the screen regularly with soapy water;
– do not use it when the screen is dry;
– free it from the screen when it has not been used for a long time.

In all cases, replace it as soon as it begins to lose efficiency: approximately once a year. ➥ 5.21.

Precaution for using the wipers

– In freezing or snowy weather conditions, clear the screen before starting the wipers (risk of motor overheating);
– ensure that no objects are obstructing the travel of the blade.

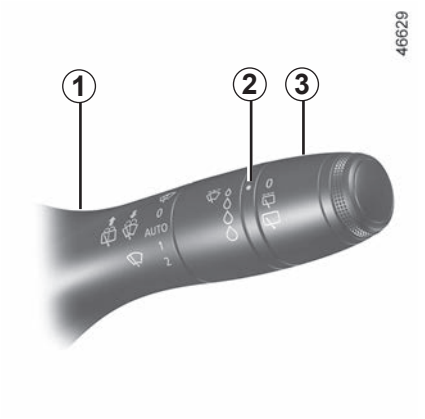

Rear screen wiper

With the ignition on, turn ring ***3*** on stalk ***1*** to align the symbol with mark ***2***.

- **switching off**
- **intermittent wiping**
  The wipers will pause for several seconds between sweeps. Wiping frequency varies with vehicle speed;
- **slow continuous wiping**

To stop the operation, pivot ring ***3*** again.

Note: when washing using a roller type car wash, return the ring ***3*** on the stalk ***1*** to the stop position to deactivate automatic wiping.

Follow usage recommendations.

Do not use the wiper arm to open or close the tailgate.

Before any action involving the rear screen (washing the vehicle, de-icing, cleaning, etc.) return stalk ***1*** to the stop position.

Risk of injury and/or damage.

Efficiency of a wiper blade

Check the condition of the wiper blades. How long they last depends on you:

- it must remain clean: clean the blade and the screen regularly with soapy water;
- do not use it when the screen is dry;
- free it from the screen when it has not been used for a long time.

In all cases, replace it as soon as it begins to lose efficiency: approximately once a year. ➥ 5.21.

Precautions for using the wipers

- In freezing or snowy weather conditions, clear the screen before starting the wipers (risk of motor overheating);
- ensure that no objects are obstructing the travel of the blade.

Activation/deactivation of the rear screen wiper

Engaging reverse gear triggers intermittent wiping (if the front wipers are in operation). If your vehicle is equipped with a vehicle settings customisation menu, you can opt to activate or deactivate this function. ➥ 1.94.

For vehicles not fitted with a settings customisation menu, you can have this function deactivated by an authorised dealer.

In the event of obstacles present on the rear window (dirt, snow, etc.), the wiper will try to sweep away all the obstacles. If an obstacle prevents the blade from moving, it can be stopped. Remove the obstacle, wait for around 30 seconds and reactivate the wiper using the wiper stalk.

Precautions

– In the event of ice, check that the blades are not stuck to the windscreen before operating the wipers. If you activate the wiper while the blade is blocked by ice, you risk damaging both the blade and the wiping motor.

– Do not operate the wipers on a dry screen. This will lead to the premature wear or damage to the blades.

Rear screen wash/wipe

With the ignition on, push and hold stalk ***1***, then release.

Holding the stalk for longer will trigger (in addition to the windscreen washer) two sweeps of the wipers followed, a few seconds later, by a third (drip wiping function).

When the stalk is released, it returns to the rear wipe position.

Section 2: driving

(Advice on use relating to fuel economy and the environment)

Starting, stopping the engine . . . 2.2
Gear control . . . 2.5
Electronic parking brake . . . 2.8
Environment . . . 2.12
Driving advice, Eco-driving . . . 2.13
Vehicle range: advice . . . 2.16
Tyre pressure monitoring system . . . 2.18
Active emergency braking . . . 2.23
Driver correction devices and aids . . . 2.30
Lane departure warning . . . 2.35
Lane keeping assist . . . 2.39
Blind spot warning . . . 2.44
Detection of road signs . . . 2.49
Speed limiter . . . 2.53
Cruise control . . . 2.57
“AUTOHOLD” function . . . 2.62
Parking distance control . . . 2.63
Reversing camera . . . 2.70
Assisted parking . . . 2.74

Starting the engine

The card must be inserted in detection zone ***1***.

To start

– depress the brake pedal;

– press button ***2***. The message READY comes on, on the instrument panel, along with a beep.

The message disappears when the vehicle speed is above approximately 3.1 mph (5 km/h).

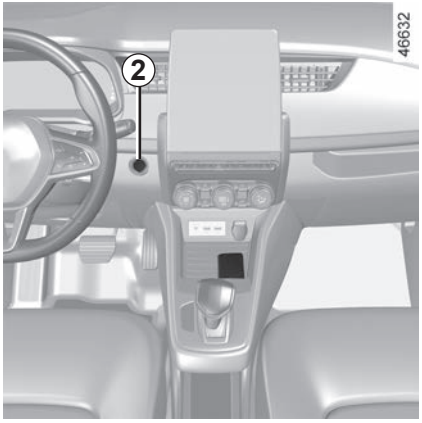

Special features

– If one of the starting conditions is not applied, the message “Press Brake + START” is displayed on the instrument panel;

– in some cases, it will be necessary to move the steering wheel whilst pressing the start button ***2*** to help unlock the steering column; the message “Turn Steering Wheel + START” will alert you.

The vehicle can only be started if the charging cord is unplugged from the vehicle.

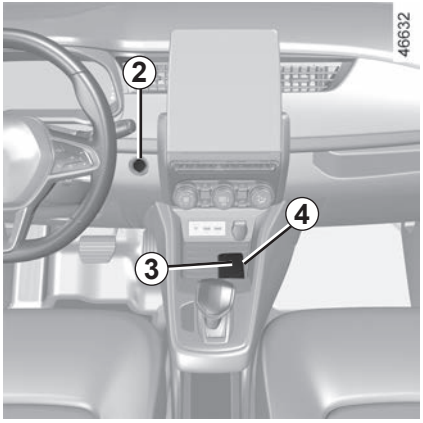

“Hands-free” starting with the tailgate open

In this case, the card should not be located in the luggage compartment, to prevent the risk of loss.

Accessories function
(switching on the ignition)

Once you have gained access to your vehicle, you may use some of its functions (radio, navigation, wipers, etc.).

To use the other functions, with the card in the passenger compartment, press the ***2*** button without pressing the pedals.

Operating faults

In certain cases, the hands-free card may not work:

– the card battery is flat, the secondary 12 V battery is discharged etc.;

– near to appliances operating on the same frequency as the card (monitor, mobile phone, video game, etc.);

– vehicle located in a high electromagnetic radiation zone.

The message “Place card on zone + START” appears on the instrument panel.

Press the brake pedal, then place the card ***4*** (button side) on the placement area ***3***. Press the ***2*** button to start the vehicle. The message goes out.

Driver’s responsibility when parking or stopping the vehicle

Never leave an animal, child or adult who is not self-sufficient alone in your vehicle, even for a short time.

They may pose a risk to themselves or to others by starting the engine, activating equipment such as the electric windows or locking the doors, for example.

Also, in hot and/or sunny weather, please remember that the temperature inside the passenger compartment increases very quickly.

RISK OF DEATH OR SERIOUS INJURY.

Stopping the engine

The vehicle must be at a standstill.

Press the ***2*** button: the engine stops, the READY message goes out on the instrument panel and the assisted parking brake is applied. The steering column is locked when the driver's door is opened or the vehicle is locked.

If the card is no longer in the passenger compartment or if the card's battery is dead, when the vehicle is stationary and you try to switch the engine off, the message "Keycard absent : press/hold START" appears on the instrument panel: press button ***2*** for longer than three seconds.
With the engine switched off, any accessories being used (radio, etc.) will continue to function for approximately 10 minutes.
When the driver's door is opened, the accessories stop working.

Never switch off the ignition before the vehicle has stopped completely. Once the engine has stopped, the brake servo, power-assisted steering, etc., and the passive safety devices such as the airbags and pretensioners will no longer operate.

Driver's responsibility when parking or stopping the vehicle

Never leave an animal, child or adult who is not self-sufficient alone in your vehicle, even for a short time.

They may pose a risk to themselves or to others by starting the engine, activating equipment such as the electric windows or locking the doors, for example.

Also, in hot and/or sunny weather, please remember that the temperature inside the passenger compartment increases very quickly.

RISK OF DEATH OR SERIOUS INJURY.

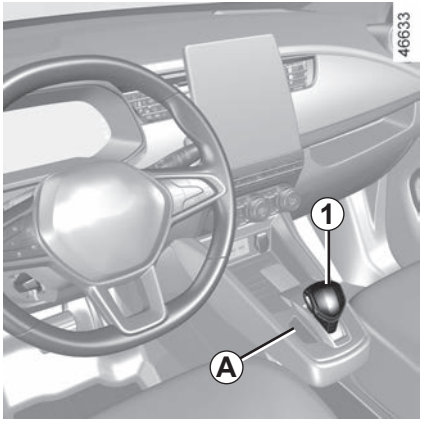

Selector lever *1*

R: reverse.
N: neutral.
D: moving off forwards normally.
B: moving off forwards with strong regenerative braking.

The ***A*** indicator light displays the gear engaged.

The following informative symbols may appear on the instrument panel display ***B***:

2: position of the gear engaged;

3: position accessible from the current position by moving the selector lever ***1*** one notch forwards or backwards;

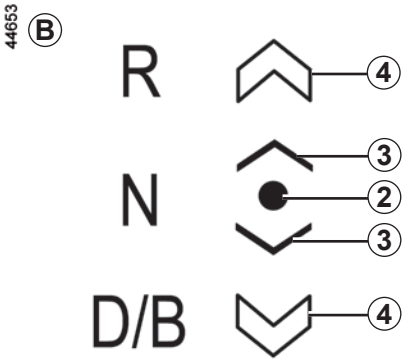

4: position accessible from the current position by moving the selector lever ***1*** two notches forwards or backwards.

The ***3*** or ***4*** symbols are displayed to indicate the gears that can be selected. If these symbols are absent this indicates that the gears cannot be selected from the current position.

The required gear will flash on the instrument panel if a gear is not accessible from the engaged position of the lever.

Operation

With the engine running READY message lit on the instrument panel ➥ 2.2, the gear control is automatically in **N** position.

To exit position **N**, it is essential to depress the front brake pedal.

With your foot on the brake pedal (warning light on display ***A*** goes out), move the lever out of position **N**.

The vehicle can only be started if the charging cord is unplugged from the vehicle.

Obstructions to the driver
On the driver's side, only use mats suitable for the vehicle, attached with the pre-fitted components, and check the fitting regularly. Do not lay one mat on top of another. **There is a risk of wedging the pedals**

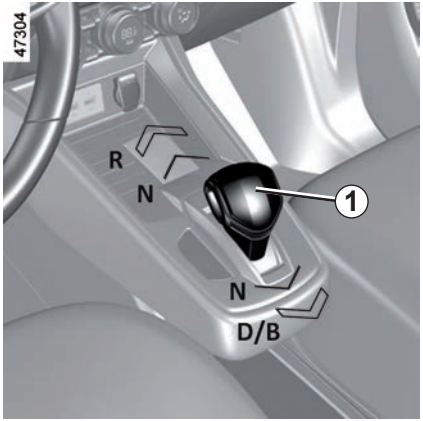

One-touch selector

Move the selector lever ***1*** one or two notches forwards or backwards to engage the desired position (**R**, **N**, **D** or **B**) then release the lever and it will return to a stable position.

The selected position is displayed on the instrument panel along with the ***2*** warning light in front of the position.

If certain conditions prevent shifting from one position to another, the requested position flashes on the instrument panel.

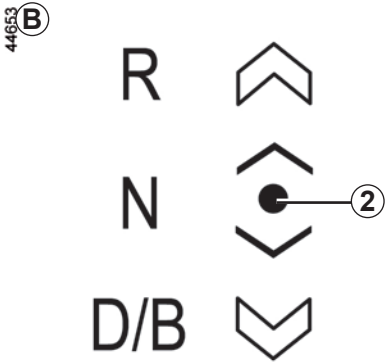

Driving in mode D

When you select position **D** when the vehicle is stationary, the vehicle moves forward as soon as you release the brake pedal (without pressing on the accelerator pedal).
While driving, press the accelerator pedal to achieve the desired speed.

Driving in mode B

This mode allows driving with a more dynamic regenerative mode. When releasing the accelerator, the vehicle uses regenerative braking to slow down the vehicle. Thus the motor generates higher electrical current which allows the traction battery to be recharged.
When you select position **B** when the vehicle is stationary, the vehicle moves forward as soon as you release the brake pedal (without pressing on the accelerator pedal).
In **B** mode, the regenerative braking will be reduced if the accumulator is cold or completely charged.

Move from D position to B or B to D

To switch from one position to the other, tilt the lever to one notch or two notches backwards.
The selected position, lit up on the instrument panel, alongside warning light ***2***, will confirm the position of the gear control.

The last selected position (**B** or **D**) is stored and will be the first of the two positions accessible from the current position **N** or **R**.

To select reverse gear

With the vehicle stationary, engine running, **N**position, **D** or **B** engaged, depress the brake pedal and move forward the lever by two notches, **R** lights up on the instrument panel.

The reversing lights will illuminate as soon as reverse gear is selected (ignition on) and, depending on the vehicle, the reversing camera ➥ 2.70.

Note: with the engine running, the vehicle moving between 0 and 5 mph (8 km/h) and position **N** or **R** engaged, it is not necessary to depress the brake pedal to engage the position **D**. This is useful when parking manoeuvres require alternating forward and reverse gearing.

Parking the vehicle

With the vehicle stationary, stop the engine. Neutral position is engaged and the electronic parking brake is applied automatically.

Operating faults

During driving:

– if the message “WARNING: Check Gearbox” appears on the instrument panel, this indicates a fault.

  Contact your approved Dealer as soon as possible;

– if the message “WARNING: Gearbox Overheating” appears on the instrument panel, stop as soon as possible to allow the gearbox to cool down and wait for the message to disappear.

The **N** position of the lever does not mechanically lock the drive wheels, make sure it is immobilised before leaving the vehicle.

When the door is opened, the message “Select NEUTRAL N” is displayed on the instrument panel if the gear control is in a position other than **N** and the engine is not switched off.

In the event of an impact to the underside of the vehicle (e.g.: striking a post, raised kerb or other street furniture), this may result in damage to the vehicle (e.g.: twisted axle), the electrical circuit or the traction battery.

Do not touch the circuit elements or any fluids or liquids.

To prevent any risk of accident, have your vehicle checked by an authorised dealer.

Risk of serious injury or electric shock and risk to life.

Assisted operation

Applying the electronic parking brake

With the vehicle stationary, the electronic parking brake can be used to immobilise the vehicle:

– **by pressing the engine start/stop button *1***;

or

– when **the driver's seat belt is unfastened**;

or

– when **the driver's door is opened**;

or

– when **the engine is stopped**.

To confirm that the electronic parking brake is applied, the message "Parking Brake ON" and warning light (Ⓟ) on the instrument panel and warning light ***2*** on the switch ***3*** light up.

After the engine is switched off, indicator light ***2*** goes out several minutes after the assisted parking brake has been applied and indicator light (Ⓟ) goes out when the vehicle is locked.

Before leaving the vehicle, check that the electronic parking brake is fully applied. Warning light ***2*** on switch ***3*** and warning light (Ⓟ) on the instrument panel light up to show that the parking brake is applied but go out when the doors are locked.

Assisted operation (continued)

Note: in some situations (electronic parking brake failure, manual release of the parking brake, etc.), a beep sounds and the message “WARNING: Apply Parking Brake” appears on the instrument panel to warn you that the electronic parking brake has been released.
– with the engine running: when the driver’s door is opened;
– with the engine off: when a front door is opened.

In this case, pull and release switch ***3*** to apply the assisted parking brake.

Assisted release of the parking brake

The brake will be released as soon as the vehicle starts and accelerates.

Manual operation

You can apply the electronic parking brake manually.

Manually applying the electronic parking brake

Pull switch ***3***. Warning light ***2*** and warning light (Ⓟ) on the instrument panel light up.

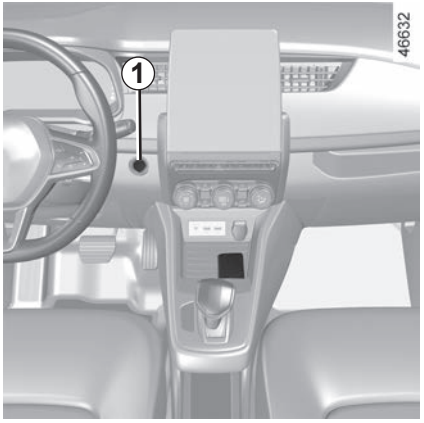

Manually releasing the electronic parking brake

Press switch ***1*** without pressing the pedals to switch the ignition on. Press the brake pedal then press switch ***3***: indicator light ***2*** on the switch and indicator light (Ⓟ) displayed on the instrument panel go out.

Before leaving the vehicle, check that the electronic parking brake is fully applied. Warning light ***2*** on switch ***3*** and warning light (Ⓟ) on the instrument panel illuminate to show that the parking brake is applied but switch off when the doors are locked.

Brief stop

To apply the electronic parking brake manually (when stopping at a red light, or stopping when the engine is running, etc.): pull and release the switch ***3***. The brake is released as soon as the vehicle is started up again.

Hill parking

When parking on a slope, pull the switch ***3*** for a few seconds to enable maximum application of the parking brake.

When parking on a slope in conditions such as mud, snow or ice, it is possible that the vehicle may become displaced. Turn the wheels so that the vehicle comes to rest against a robust object (pavement kerb, etc.).

To park, without applying the electronic parking brake (if there is a risk of freezing, for example):

– stop the engine by pressing the engine Start/Stop button ***1***;

– release the driver's seat belt;

– open the driver's door;

– if necessary, position a chock in front of or behind the wheels to ensure that the vehicle is immobilised;

– manually release the electronic parking brake (please see the information on "Manually releasing the electronic parking brake" on the previous page). The message "WARNING: Apply Parking Brake" is displayed on the instrument panel accompanied by a beep to warn you that it is released (this is normal);

– close the driver's door and lock the vehicle.

For safety reasons, automatic release is deactivated when the driver's door is open or not shut properly and the engine is running (in order to prevent the vehicle from moving without the driver). The "Release Parking Brake Manually" message appears on the instrument panel when the driver depresses the accelerator.

If the message "WARNING: Electric System" or "Check battery" is displayed, you must immobilise the vehicle by pulling the switch ***3*** for approximately 10 seconds. If the slope and the conditions require it, chock the wheels of the vehicle.

Risk of loss of immobilisation of the vehicle.

Call an approved Dealer.

Operating faults

– If there is a fault, the warning light illuminates on the instrument panel accompanied by the message "Check Parking Brake" and in some cases the (P) warning light appears. Contact your approved Dealer straight away.

– If there is an assisted parking brake fault, the warning light STOP comes on, along with the message "WARNING: Braking System", a beep and, in some cases, the warning light (P).

This means that you must stop as soon as traffic conditions allow.

Never leave your vehicle without moving the selector lever to position **N**, applying the handbrake and switching off the engine. This is because when the vehicle is stationary with the engine running and a gear engaged, the vehicle may begin to move if you accelerate.

There is a risk of accidents.

If no lights or sounds are apparent, this indicates a fault in the instrument panel. This indicates that it is essential to stop immediately (as soon as traffic conditions allow). Ensure that the vehicle is correctly immobilised and contact an approved Dealer.

Your vehicle has been designed with respect for the **environment** in mind for its entire service life: during production, use and at the end of its life.

Manufacture

Your vehicle has been manufactured at a factory which complies with a policy to reduce the environmental impact on the surrounding areas (reduction of water and energy consumption, visual and noise pollution, atmospheric emissions and waste water; sorting and re-using waste).

Emissions

Your vehicle has been designed to emit fewer greenhouse gases (CO2) while in use, and therefore to consume less fuel (e.g. 160.9 g/mile (100 g/km), equivalent to 67.25 mpg (4.2 l/100 km) for a petrol vehicle). Our vehicles are also equipped with an emission control system including a catalytic converter, an oxygen sensor and an active carbon filter (the latter prevents vapour from the fuel tank being released into the open air).

Please make your own contribution towards protecting the environment too

– Parts and vehicles at the end of their life must not be thrown away. They must be handed to a legal entity that complies with environmental standards.

– Worn parts replaced in the course of routine vehicle maintenance (vehicle battery, oil filter, air filter, batteries, etc.) and oil containers (empty or filled with used oil) must be disposed of at dedicated collection points.

– To optimise the recycling of your vehicle at the end of its life, you can contact an authorised dealer or visit the manufacturer's website to be directed to collection points that guarantee respect for the environment complying with local laws.

Recycling

Your vehicle is 85% recyclable and 95% recoverable.

To achieve these objectives, many of the vehicle components have been designed to enable them to be recycled. The materials and structures have been carefully designed to:

– allow these components to be easily removed and reprocessed by specialist companies;

– promote a circular economy (re-use, recycling, recovery, etc.).

This is particularly true for electrified vehicle batteries.

In order to preserve raw material resources, your vehicle also includes many parts made from recycled plastics or renewable materials.

Consumption in real time depends on vehicle usage conditions, equipment fitted and the user's driving style. To optimise fuel consumption, please refer to the following advice.

Depending on the vehicle, you will be provided with functions which enable you to lower the energy consumption:
– charge meter;
– the driving style indicator;
– the journey record and eco-driving advice via the multimedia screen;
– ECO mode, activated by the **ECO** button.

If fitted on the vehicle, the navigation system provides additional information.

The presence and display of this information depends on the type of ambiance selected ➥ 1.82.

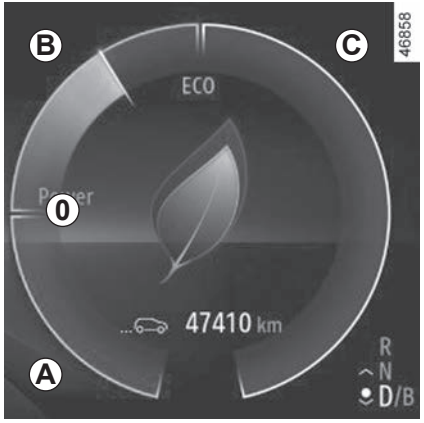

Charge meter
(on the instrument panel)

The charge meter gives the driver a real-time view of the vehicle's energy consumption.

Blue "Energy recovery" *A* usage zone

When driving, if you lift your foot off the accelerator pedal or apply the brake, the motor generates electrical current during deceleration, and this energy is used to slow down the vehicle and recharge the traction battery.

Optimum use zone *0*

Indicates nil consumption.

Green "recommended consumption" *B* usage zone

The traction battery supplies the electrical energy required for the motor to move the vehicle.

"Consumption not recommended" white use zone *C*

Indicates high energy consumption.

Driving style indicator

Informs you about the driving style adopted in real time. This is shown by indicator light ***1***.
The more petals displayed on ***1***, the more your driving is flexible and economical.
If you regularly monitor this indicator, you will reduce your vehicle's fuel consumption.
To activate/deactivate the driving style indicator, press switch ***2*** as many times as necessary to reach the Data tab.

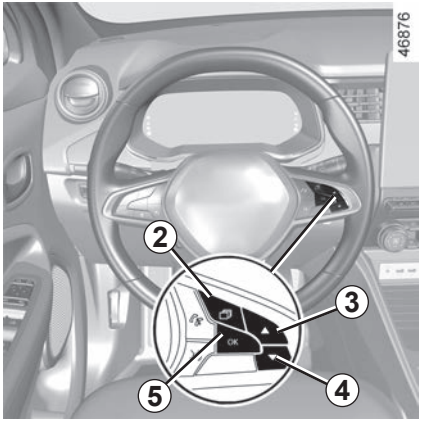

Press the ***3*** or ***4*** switch to access the indicator menu, then confirm by pressing ***5*** "**OK**".

Journey record

For vehicles fitted with this, once the engine is switched off, a Journey Record is displayed on the multimedia screen ***6***. This record shows the information relating to your last journey:
– average energy consumption;
– number of miles/kilometres travelled;

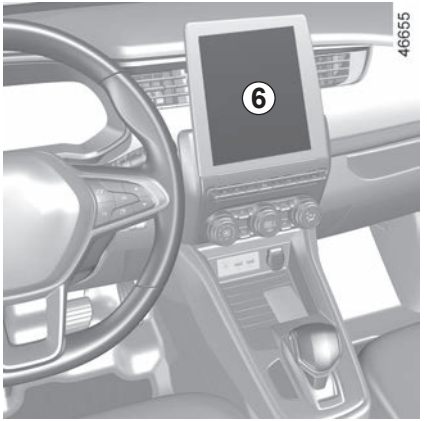

– an overall grade taking into account acceleration, braking anticipation and your skill in managing speed;
– advice to enable you to improve your rating.

For more information, refer to the equipment user guide.

Navigation system

Using the information available on your navigation system (traffic information, nearest charging station, etc.) makes it easy to manage your journey.

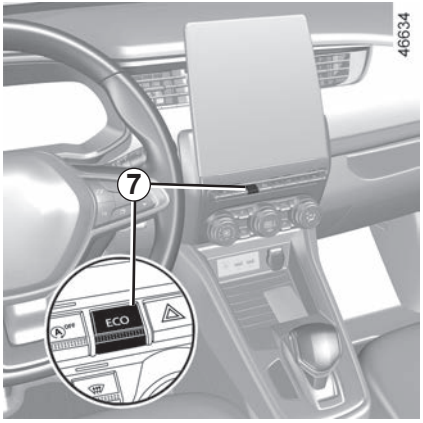

ECO mode

ECO mode is a function which optimises vehicle range. It affects certain driving operations (acceleration, cruise control, deceleration, etc.).

Activating the function

Press the switch ***7***.

The ***8*** **ECO** warning light comes on on the instrument panel.

While driving, it is possible to exit the ECO mode temporarily in order to improve engine performance.

To do this, press the accelerator pedal firmly and fully. The warning light ***8*** **ECO** flashes on the instrument panel for the duration of the operation.

ECO mode is reactivated when you take pressure off the accelerator pedal.

With ECO mode on, the vehicle speed is limited to approximately 62 mph (100 km/h).

Disabling the function

Press the switch ***7***.

Warning light ***8*** **ECO** goes out on the instrument panel.

Cruise control switches to standby each time ECO mode is activated or deactivated ➥ 2.57.

VEHICLE RANGE: recommendations (1/2)

In real usage, the range of an electric vehicle may vary depending on several factors over which you have partial control, which may make a considerable difference to the vehicle range. These factors are:
– speed and driving style;
– type of road;
– heating level;
– tyres;
– use of electrical accessories;
– vehicle loading.
Furthermore, activating ECO mode enables the vehicle to automatically take charge of all energy consumers (engine power etc.) to reduce their consumption to the fullest possible extent ➥ 2.13.

Speed and driving style

Driving at high speed will significantly reduce your vehicle's range. Examples (at a steady speed):

– reducing the speed from approximately 80.6 mph (130 km/h) to 68.2 mph (110 km/h) allows you to save up to around 20% of fuel range;

34630

– reducing the speed from approximately 55.8 mph (90 km/h) to 49.6 mph (80 km/h) allows you to save up to around 10% of fuel range.

A "sporty" driving style reduces your vehicle range: opt for a "lighter" driving style.

Advice:

– drive at a constant speed;

– keep an eye on the tools available to you to view the road conditions (charge meter, current consumption, journey record, etc.) ➥ 2.13 ;

47305

– adapt your driving style to avoid excessive energy consumption;

– favour power recovery: anticipate traffic changes by lifting your foot off the accelerator pedal or by braking gradually.

Road type

Do not try to maintain the same speed up a hill, accelerate no more than you would on the level. Keep your foot in the same position on the accelerator pedal.

34629

Heating levels

The use of heating or air-conditioning reduces vehicle range.
To maintain your vehicle range, you are recommended to select “programming” mode before using the vehicle ➥ 3.11.

33395

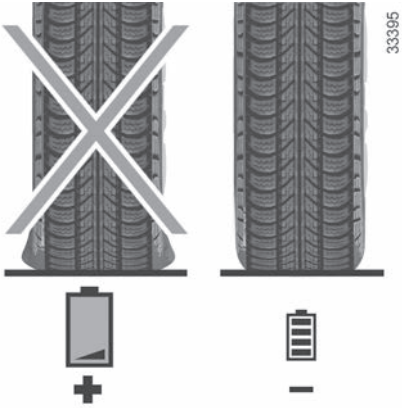

Tyres

An under-inflated tyre increases energy consumption. Comply with the specified tyre pressures for your vehicle.
When driving, use tyres made by the same manufacturer, with the same dimensions, type and structure as the original tyres. The use of non-regulation tyres significantly reduces vehicle range ➥ 4.9.

Vehicle loading

Avoid pointlessly overloading your vehicle.

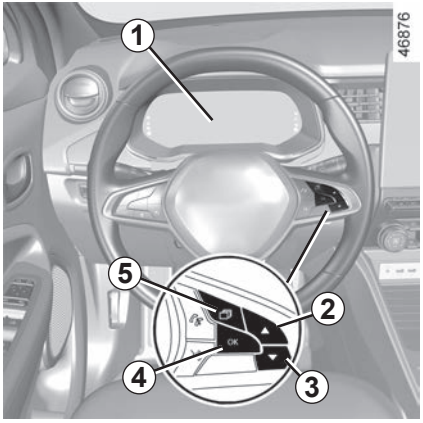

If the vehicle is equipped with the function, this system monitors the tyre pressure.

Operating principle

Each wheel (except for the emergency spare wheel) has a sensor in the inflation valve which periodically measures the tyre pressure.
The system displays the current pressures on the instrument panel ***1*** and alerts the driver in the event of insufficient pressure.

Resetting the standard level for the tyre pressures

This should be done:
– when the standard tyre pressure needs to be changed to adapt to usage conditions (empty, carrying a load, motorway driving, etc.);
– after swapping a wheel (however this practice is not recommended);
– after changing a wheel.

It should always be done after checking the tyre pressure of all four tyres when cold.

Tyre pressures must correspond to the current usage of the vehicle (empty, carrying a load, motorway driving, etc.).

Resetting can also be performed from the multimedia screen. Select “Vehicle”, “Tyre pressure”.

Resetting procedure

Ignition on, **vehicle stopped:**
– Repeatedly tap switch ***5*** as many times as necessary to reach the vehicle tab;
– tap switch ***2*** or switch ***3*** to access the tyre pressures reset page. The message “SET tyre pressure (press and hold)” appears on the instrument panel;
– press and hold the ***4*** OK switch to launch the reset. The flashing tyres symbol followed by the message “Learning Tyre Pressures” indicates that the reset request for the tyre pressure has been acknowledged.

Reset can take several minutes of driving.

Note: the standard tyre pressure cannot be less than that recommended and indicated on the door frame.

TYRE PRESSURE MONITOR (2/5)

The table below shows the possible messages related to the tyre resetting procedure.

Steps	Displays (depending on the vehicle)	Messages	Readings
1		Tyre pressure init. long press	With the ignition on and the vehicle stationary, start the resetting the pressure of all four tyres by pressing and holding the ***4*** OK switch.
2		Learning Tyre Pressures	The “---” quote marks in front of each wheel will flash to indicate that the system has registered the tyre pressure reset for all four wheels.
3		Tyre detection in progress	The “---” quote marks in front of each wheel will remain lit. This system resets the tyre pressure of all four tyres. You can now drive. The message may remain displayed during short journeys. **Note:** during the reset, tyre pressure monitoring remains in operation.
4			The pressure value of the four tyres is displayed: the re-setting procedure is complete and successful.

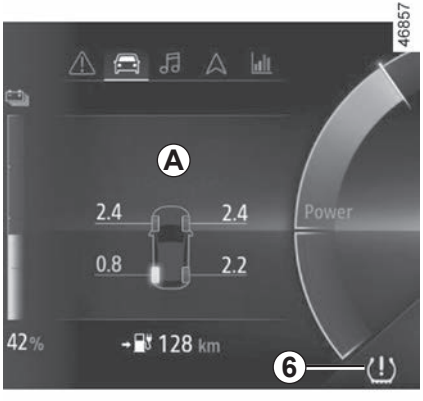

Display
The display ***A*** and the warning light ***6*** on the instrument panel warn you of any tyre pressure faults (flat tyre, punctured tyre, system fault, etc.).

For your safety, the warning light STOP requires you to stop immediately as soon as traffic conditions allow.

"Adjust tyre pressure"
A yellow wheel appears accompanied by a fixed ***6*** warning light and the message "Adjust Tyre Pressure".
They indicate that a wheel is deflated.
Check and, if necessary, readjust the pressures of the four wheels when cold.

The warning light ***6*** goes off after a few minutes' driving.

The sudden loss of pressure in a tyre (burst tyre, etc.) cannot be detected by the system.

"Puncture"
A red wheel appears accompanied by a fixed ***6*** warning light and the message "Puncture" as well as a sound signal.
This message appears along with the STOP warning light.
They indicate that the affected wheel is punctured or severely underinflated. Replace it or contact an approved dealer if it is punctured. Top up the tyre pressure if the wheel is deflated.

"Check tyre pressure sensors"
The wheel disappears and the warning light ***6*** flashes for several seconds before staying on and the message "Check Tyre Pressure Sensors" appears.

This message appears along with the warning light. They indicate that at least one wheel is not fitted with sensors (e.g. emergency spare wheel). Otherwise, consult an authorised dealer.

“Tyre location failure”

The message “Failure to detect tyres” appears during driving if one or more wheels have been fitted with sensors not recognised by the network.

Consult an approved dealer

Readjustment of tyre pressures

The pressures must be adjusted when the tyres are cold ➥ 4.9. If the tyre pressures cannot be checked when the tyres are cold, the recommended pressures should be increased by 0.2 to 0.3 bar (3 PSI).
Never deflate a hot tyre.

Replacing wheels/tyres

This system requires specific equipment (wheels, tyres, hubcaps, etc.). ➥ 5.6.
Contact an approved Dealer to fit new tyres and to find out about available accessories compatible with the system and available from your dealer network: the use of any other accessory could affect the correct operation of the system or damage a sensor.

Emergency spare wheel

If the vehicle is equipped with an emergency spare wheel, it will not have a sensor. If the vehicle is fitted with one, the warning light ***6*** flashes for several seconds then comes on continuously along with the warning light, and the message “Check Tyre Pressure Sensors” appears on the instrument panel.

Tyre repair product and inflation kit

As the valves are specifically designed, only use equipment approved by the approved network. ➥ 5.3.

This function is an additional driving aid.
However, the function is not intended to replace the driver. It cannot, therefore, under any circumstances replace the vigilance or the responsibility of the driver. Check the tyre pressures, including the emergency spare wheel, once a month.

TYRE PRESSURE MONITOR (5/5)

The information on the instrument panel signals any potential tyre pressure faults (e.g. deflated or punctured tyre). For your safety, the warning light STOP requires you to stop immediately as soon as traffic conditions allow.

Indicator lights	Messages	Displays	Readings
	Adjust Tyre Pressure	2.3 1.8 2.3 2.3	The wheel and associated pressure value are displayed in yellow. This indicates that tyre under-inflation has been detected. Check and adjust the pressure of the four tyres then reset the system.
+ STOP	Puncture	0.8 2.3 2.3 2.3	The wheel and associated pressure value are displayed in red. This indicates that the tyre concerned is punctured or severely underinflated. Adjust the pressure of the four tyres while cold and reset the system if the tyre is deflated. Replace the tyre (or have it replaced) if it is punctured.
+	Check Tyre Pressure Sensors		A wheel is no longer displayed. This indicates that at least one wheel is not fitted with a sensor (e.g. emergency spare wheel) or that the sensor is faulty. Consult an approved dealer.
	Failure to detect tyres	... ...	This indicates that the system has not been able to determine the pressure of each tyre. This may be caused by the use of a sensor not recommended by an approved dealer. The tyre pressure sensor monitoring system remains in operation.

ACTIVE EMERGENCY BRAKING (1/7)

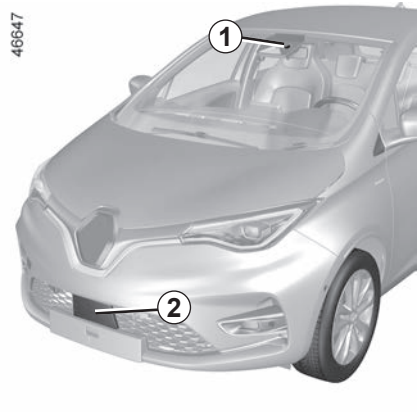

The system uses information from the radar ***2*** and the camera ***1*** to determine the distance from your vehicle:

– from the vehicle ahead in the same lane;

or

– surrounding pedestrians and cyclists.

The system informs the driver if there is a risk of head-on collision to enable appropriate emergency manoeuvres (pressing the brake pedal and/or turning the steering wheel).

Depending on the reactivity of the driver, the system can assist with braking in order to limit damage or prevent a collision.

Note: ensure that the windscreen and front bumper are not obstructed (by dirt, mud, snow, condensation, number plate, etc.).

This system can apply maximum braking to the vehicle until it is completely stationary if necessary.

For safety reasons, always wear your seat belt when travelling in your vehicle and make sure that it is loaded so that no items can be thrown forward and hit the occupants.

This function is an additional driving aid. This function is not under any circumstances intended to replace the due care and attention of the driver, who should at all times be in control of the vehicle.

Operation

Detection of vehicles

When driving, in the event of a risk of collision with the vehicle in front the system will:

– **warn of the risk of collision:** when the vehicle speed is between 4 mph (7 km/h) and 106 mph (170 km/h), the message “Brake” is displayed in red on the instrument panel ***3*** accompanied by an audible warning.

  If the driver depresses the brake pedal and the system still detects a risk of collision, the brake force is increased.

– **braking may be triggered:** when the vehicle is moving slower than approximately 75 mph (120 km/h), if the driver does not respond to the warning and a collision becomes imminent.

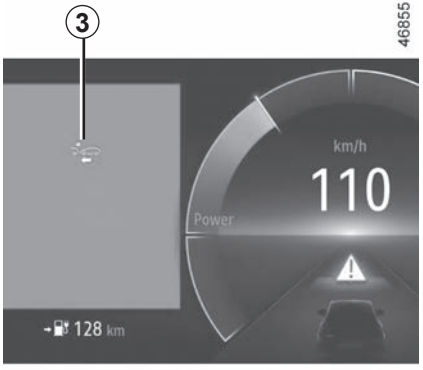

If the vehicle stopped as a result of active emergency braking, the driver must keep the vehicle stationary by applying the brake pedal.

Note: if the driver uses the vehicle controls (steering wheel, pedals, etc.) the system may delay certain operations or not activate.

Special features of warnings

Depending on the speed, the warning and braking may be activated simultaneously.

Special features of stationary vehicles

Stationary vehicles are detected when your vehicle is being driven at a speed between approximately 4 mph (7 km/h) and 50 mph (80 km/h). The system is not active and does not emit a warning for stationary vehicles when you exceed approximately 50 mph (80 km/h).

In the event of emergency manoeuvre, you can stop braking at any moment by:
– tapping the accelerator pedal;
or
– turning the steering wheel as a collision avoidance manoeuvre.

Detection of pedestrians and cyclists
(depending on the vehicle)

When driving at a speed between approximately 4 mph (7 km/h) and 50 mph (80 km/h), if there is a risk of collision with a pedestrian or a cyclist, the system:

– **warns you of a collision risk:**
the “Brake” message is displayed in red on the instrument panel ***3***, accompanied by a sound signal.

If the driver presses the brake pedal and the system still detects a risk of collision, the braking force is increased if it is not sufficient to prevent the collision.

– **may trigger braking:**
if the driver fails to react following the alert and collision becomes imminent.

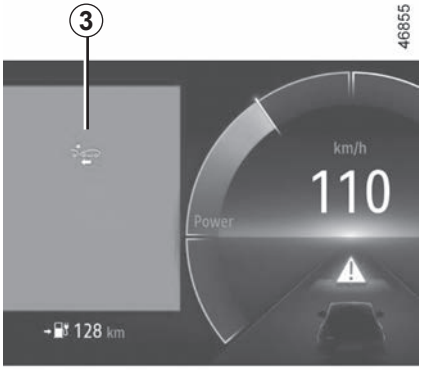

If active emergency braking has caused the vehicle to stop, the vehicle is kept stationary for a short time. Beyond this time limit, the vehicle must be held stationary by the driver keeping their foot on the brake pedal.

Note: if the driver uses the vehicle controls (steering wheel, pedals, etc.) the system may delay certain operations or not activate.

Special features of warnings

Depending on the speed, the warning and braking may be activated simultaneously.

In the event of emergency manoeuvre, you can stop braking at any moment by:
– tapping the accelerator pedal;
or
– turning the steering wheel as a collision avoidance manoeuvre.

Activating or deactivating the system

For vehicles fitted with a multimedia screen

With the vehicle stopped and the engine running, from the multimedia screen ***4***, select “Settings” menu, “Vehicle” tab, “Driving assistance” menu, “Active braking” then select “ON” or “OFF”.

Upon deactivation of the system, the warning light illuminates or, depending on the vehicle, the warning light illuminates on the instrument panel.

Temporarily not available

If the system detects a temporary fault the warning light illuminates, or depending on the vehicle the warning light illuminates on the instrument panel.

The possible causes are:

– the system is temporarily blinded (glare from the sun, dipped beam headlights, bad weather conditions etc.). The system will be operational again when visibility conditions are better;

– the system is temporarily interrupted (e.g. the windscreen, front or rear bumper or logo is obscured by dirt, mud, snow, condensation, etc.) In this case, park the vehicle and switch off the engine. Clean the windscreen, the front bumper or the logo. When you next start the engine, the warning light and the message go out.

If this is not the case, this may arise from another cause; contact an Approved Dealer.

Operating faults

If the function detects an operating fault, the and warning lights or, depending on the vehicle, the warning light illuminate(s) on the instrument panel accompanied by the message “Front camera to check” or “Front radar to check” or “Check Camera/Radar”.

Consult an approved dealer.

This system is reactivated each time the ignition is switched on.

Active emergency braking

This function is an additional driving aid. This function is not under any circumstances intended to replace the due care and attention of the driver, who should at all times be in control of the vehicle. The triggering of this function may be delayed or prevented when the system detects clear signs of control of the vehicle by the driver (action on the steering wheel, pedals etc.).

The system cannot be activated:
– when the gear lever is in neutral position or the clutch pedal has been depressed for ten seconds;
– when the parking brake is activated;
– when the Electronic Stability Program (ESC) has started.

System servicing/repairs

– In the event of an impact, the radar and/or camera may become misaligned and their service may be affected. Deactivate the function and contact an Approved Dealer.

– Any work in the area where the radar and/or camera is located (repairs, replacements, windscreen modifications, etc.) must be carried out by a qualified professional.

Only an authorised dealer is qualified to service the system.

System disturbance

Some conditions can disturb or damage the operation of the system, such as:
– a complex environment (metal bridge, tunnel etc.);
– poor weather conditions (snow, hail, black ice etc.);
– poor visibility (night, fog etc.);
– poor contrast between the object (vehicle, pedestrian etc.) and the surrounding area (e.g. pedestrian dressed in white located in a snowy area etc.);
– being dazzled (glaring sun, lights of vehicles travelling in the opposite direction etc.);
– windscreen obscured (by dirt, ice, snow, condensation etc.);
– ...

In these conditions, the system may not react, may warn the driver or may brake inadvertently.

Limitation of the system operation

– Each time the vehicle is started, the system carries out a calibration according to the vehicle surroundings and may be inactive for a length of time between approximately two and five minutes;
– A vehicle travelling in the opposite direction will not trigger any alert or affect operation of the system;
– The radar and camera zones must be kept clean and free of any tampering in order to ensure the proper operation of the system;
– The system may not respond to small vehicles such as motorbikes as effectively as to other vehicles;
– The system may not operate optimally when the road surface is slippery (rain, snow, black ice etc.);
– To ensure correct operation, the system needs to distinguish the complete outline of the pedestrian. So the system cannot detect:
  – pedestrians in the darkness or in poor lighting conditions;
  – partially visible pedestrians:
  – pedestrians less than approximately 80 cm tall;
  – pedestrians carrying large objects;
  – ...

In these conditions, the system may not react, may warn the driver or may brake inadvertently.

Deactivating the function

You must disable the function if:

– the camera area has been damaged (e.g. on the inside or outside of the windscreen);

– the front of the vehicle was damaged (impact, distortion, scratch on the radar etc.);

– the vehicle is being towed (breakdowns);

– the windscreen is cracked or distorted (do not carry out windscreen repairs in this area; have it changed by an approved dealer);

– you are not driving on a paved road.

In the event of the system behaving abnormally, deactivate it and consult an authorised dealer.

Halting the function

You can halt the active braking function at any time by tapping the accelerator pedal or by turning the steering wheel in a collision avoidance manoeuvre.

Depending on the vehicle, they comprise:

- **the ABS (anti-lock braking system);**
- **the electronic stability program ESC with understeer control and traction control;**
- **emergency braking assistance with (depending on the vehicle) braking anticipation;**
- **hill start assist;**
- **regenerative braking system.**

Other driving assistance systems are detailed on the following pages.

These functions are an additional aid in the event of critical driving conditions, enabling the vehicle behaviour to be adapted to suit the driving conditions.

However, the functions do not take the place of the driver. **They do not increase the vehicle's limits and should not encourage you to drive more quickly.** Therefore, they can under no circumstances replace the vigilance or responsibility of the driver when manoeuvring the vehicle (the driver must always be ready for sudden incidents which may occur when driving).

ABS (anti-lock braking system)

Under heavy braking, the ABS prevents the wheels from locking, allowing the stopping distance to be managed and keeping control of the vehicle.
Under these circumstances, the vehicle can be steered to avoid an obstacle whilst braking. In addition, this system can increase stopping distances, particularly on roads with low surface grip (wet ground etc.).
You will feel a pulsation through the brake pedal each time the system is activated. The ABS does not in any way improve the vehicle's physical performance relating to the road surface and roadholding. It is still **essential** to follow the rules of good driving practice (such as driving at a safe distance from the vehicle in front etc.).

In an emergency, apply **firm and continuous pressure** to the brake pedal. There is no need to pump it repeatedly. The ABS will modulate the force applied in the braking system.

Operating faults

– and are lit on the instrument panel accompanied, depending on the vehicle, by the messages “Check ABS”, “WARNING: Check Braking System” and “Check ESC”: the ABS, the ESC and the emergency brake assist are deactivated. **Braking is always enabled**;

– , , and STOP lit on the instrument panel accompanied by the message “Braking system fault”: **this indicates a fault in the braking system.**

In both cases, please consult an Authorised Dealer.

Your braking systems are partially operational. However, it is **dangerous to brake suddenly** and it is essential to stop immediately, as soon as traffic conditions allow. Contact an approved dealer.

Electronic stability program ESC with understeer control and traction control

Electronic stability control ESC

This system helps you to keep control of the vehicle in critical driving conditions (avoiding an obstacle, loss of grip on a bend, etc.).

Operating principle

A sensor in the steering wheel detects the direction selected by the driver.

Other sensors throughout the vehicle measure the actual direction.

The system compares driver input to the actual trajectory of the vehicle and corrects the trajectory if necessary by controlling the braking of certain wheels and/or engine power. In the event that the system is engaged, indicator light flashes on the instrument panel.

Understeer control

This system optimises the action of the ESC in the case of pronounced understeer (loss of front axle road holding).

Traction control

This system helps to limit wheelspin of the drive wheels and to control the vehicle when pulling away accelerating or decelerating.

Operating principle

Using the wheel sensors, the system measures and compares the speed of the drive wheels at all times and slows down their over-rotation. If a wheel is starting to slip, the system brakes automatically until the drive supplied becomes compatible with the level of grip under the wheel again.

Operating faults

When the system detects an operating fault the message “Check ESC” and warning light and appear on the instrument panel. In this case, the ESC and traction control system are deactivated.

Consult an approved dealer.

Emergency brake assist

This system supplements the ABS and helps reduce vehicle stopping distances.

Operating principle

The system is for detecting an emergency braking situation. In this case, the braking system immediately develops maximum power and may trigger ABS regulation.

ABS braking is maintained as long as the brake pedal is applied.

Brake lights come on

Depending on the vehicle, these may flash in the event of sudden deceleration.

Braking anticipation

Depending on the vehicle, when you rapidly release the accelerator, the system anticipates the braking manoeuvre in order to reduce stopping distances.

Special cases

When using the cruise control:
- if you use the accelerator, when you release it, the system may be triggered;
- if you do not use the accelerator, the system will not be triggered.

Operating faults

When the system detects an operating fault the message “WARNING: Check Braking System” appears on the instrument panel along with the warning light.

Consult an approved dealer.

These functions are an additional aid in the event of critical driving conditions, enabling the vehicle behaviour to be adapted to suit the driving conditions.

These functions do not take the place of the driver. **They do not increase the vehicle’s limits and should not encourage you to drive more quickly.** Therefore, they can under no circumstances replace the vigilance or responsibility of the driver when manoeuvring the vehicle (the driver must always be ready for sudden incidents which may occur when driving).

Hill start assistance

Depending on the gradient of the incline, this system assists the driver when starting on a hill. It prevents the vehicle from rolling backwards by automatically applying the brakes when the driver lifts his/her foot off the brake pedal to depress the accelerator pedal.

System operation

It only operates when the gear lever is in a position other than **N** and the vehicle is completely stationary (brake pedal depressed).

The system holds the vehicle for approximately **2 seconds**. The brakes are then gradually released (the vehicle will move according to the slope).

The hill start assistance system cannot completely prevent the vehicle from rolling backwards in all situations (extremely steep gradients, etc.).

In all cases, the driver may depress the brake pedal to prevent the vehicle from rolling backwards.

The hill start assistance function should not be used for prolonged stops: use the brake pedal.

This function is not designed to immobilise the vehicle permanently.

If necessary, use the brake pedal to stop the vehicle.

The driver must remain particularly vigilant when driving on slippery or low-grip surfaces.

Risk of serious injury.

Regenerative braking system

When braking, the regenerative braking system can convert the energy produced by the vehicle deceleration into electric energy.

This will recharge the 400 V traction battery and provide greater vehicle range.

Operating faults

– lights up on the instrument panel, alongside the message “WARNING: Check Braking System”: **braking assistance is available at all times.**

  Under these conditions, the feel of applying the brake pedal may be different.

  You are recommended to apply strong continuous pressure to the pedal.

  Please see an authorised dealer.

– STOP lit on the instrument panel accompanied by the message “Braking system fault”: **this indicates a fault in the braking system.**

  Please call an authorised dealer.

The STOP warning light requires you to stop immediately, for your own safety, as soon as traffic conditions allow. Switch off the engine and do not restart it. Call an approved Dealer.

LANE DEPARTURE WARNING (1/4)

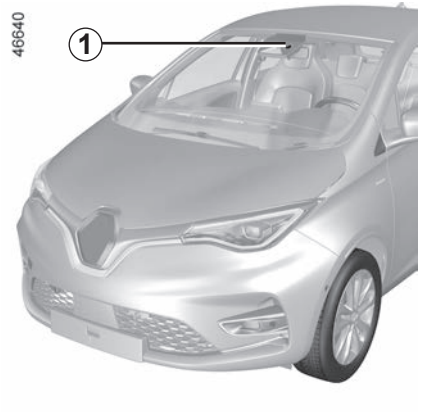

Using information from the ***1*** camera, the function warns the driver when a continuous or broken line is crossed or when approaching the roadside (divider, barrier, pavement, embankment, etc.) without the direction indicator lights being activated.

Note: make sure the windscreen is not obscured (dirt, mud, snow, condensation etc.).

This function is an additional driving aid. This function is not under any circumstances intended to replace the due care and attention of the driver, who should at all times be in control of the vehicle.

The lane departure warning function does not correct the vehicle's trajectory.

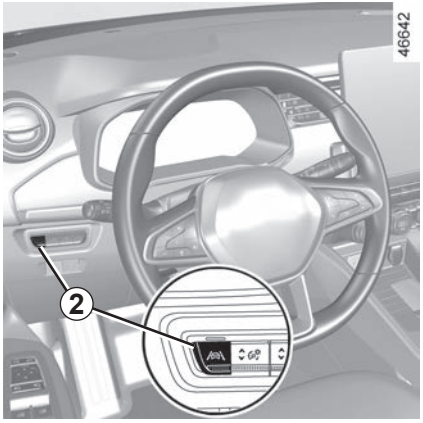

Activation/deactivation

To activate the function, press the ***2*** switch as many times as required to select “Lane Departure Warning” on the instrument panel. The “Lane departure warning on” message and “ ” warning light are displayed on the instrument panel.

To disable the function, press the ***2*** switch as many times as required to select “Lane departure warning off” (or, depending on the vehicle “Lane Keeping deactivated”) on the instrument panel. Warning light goes out on the instrument panel.

Operation

When the function is activated, the warning light and the left and right lines ***3*** are displayed in grey on the instrument panel.

The function is set to notify the driver if:

– speed is between approximately 43 mph (70 km/h) and 112 mph (180 km/h);

and

– the warning light and left/right line indicators ***3*** are coloured white.

The warning function is triggered if the vehicle breaches a line or approaches a roadside (divider, barrier, pavement, embankment, etc.) without the direction indicator lights being activated.

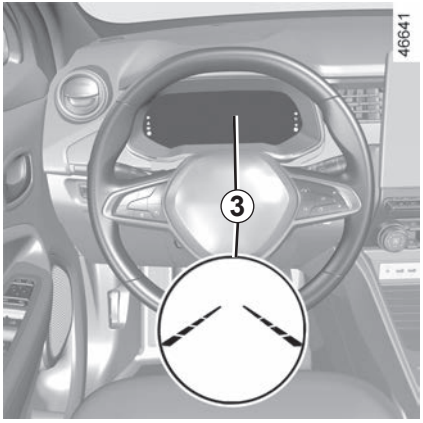

The function alerts the driver:

– by a vibration in the steering wheel;

and

– the warning light and ***3*** the indicator for the crossed line turn red.

Each time the vehicle is started, the function continues the mode saved the last time the engine was stopped.

Temporarily not available

– very fast lane departure;
– driving continuously on a line;
– four seconds approximately after changing lanes;
– tight bends;
– impaired visibility;
– activation of one of the direction indicator lights;
– hard acceleration etc.

When the function is not available, the warning light and the left/right indicators turn to grey on the instrument panel.

Conditions for non-activation of the system

The system cannot be activated when:
– reverse gear is engaged;
– the field of vision of the camera is obstructed;
– the STOP warning light is displayed.

The warning light and the left/right line indicators turn to grey on the instrument panel.

Adjustment

With the vehicle stationary, engine running, from the multimedia screen ***4*** select the “Settings” menu, “Vehicle” tab, the “Driving assistance” menu, then “Lane”:

– “Vibration”: adjust the steering wheel vibration level;

– “Alert”: adjust the sensitivity level for line detection. To do this, select:
  – “Late”: line detected when crossing;
  – “Standard”: line detected on approach;
  – “Early”: line detected nearby.

Please refer to the multimedia instructions for further information.

Operating faults

In the event of a malfunction, the left and right line indicators (and, depending on display style, the warning light) disappear or stay grey on the instrument panel.

In some cases, they are accompanied by the “Front camera to check” message or the warning light on the instrument panel.
Consult an approved dealer.

This function is an additional driving aid. This function is not under any circumstances intended to replace the due care and attention of the driver, who should at all times be in control of the vehicle.

System servicing/repairs

– In the event of an impact, the camera alignment may be changed, and its operation may consequently be affected. Deactivate the function, then consult an authorised dealer.
– Any work in the area where the camera is located (repairs, replacements, windscreen modifications etc.) must be carried out by a qualified professional.

Only an authorised dealer is qualified to service the system.

In the event of system disturbance

Some conditions can disturb or damage the operation of the system, such as:
– windscreen obscured (by dirt, ice, snow, condensation etc.);
– a complex environment (tunnel etc.);
– poor weather conditions (snow, hail, black ice, rain, etc.);
– poor visibility (night, fog etc.);
– the road markings are irregular or difficult to distinguish (e.g. partially erased, excessive spacing, distorted road surface);
– being dazzled (glaring sun, lights of vehicles travelling in the opposite direction etc.);
– the road is narrow, winding or undulating (tight bends etc.);
– closely following a vehicle travelling in the same lane.

Risk of false alarms or absence of warnings

LANE KEEPING ASSIST (1/5)

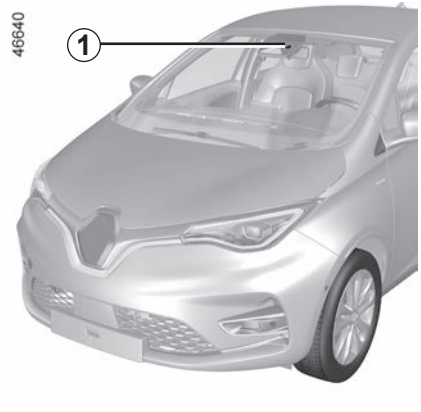

Using information from the ***1*** camera, the function triggers corrective action on the vehicle steering system when a continuous or broken line is crossed or when approaching the roadside (divider, barrier, pavement, embankment, etc.) without the direction indicator lights being activated.

You can **retake control of the vehicle** at any time by operating the steering wheel.

Note: make sure the windscreen is not obscured (dirt, mud, snow, condensation etc.).

This function is an additional driving aid. This function is not under any circumstances intended to replace the due care and attention of the driver, who should at all times be in control of the vehicle.

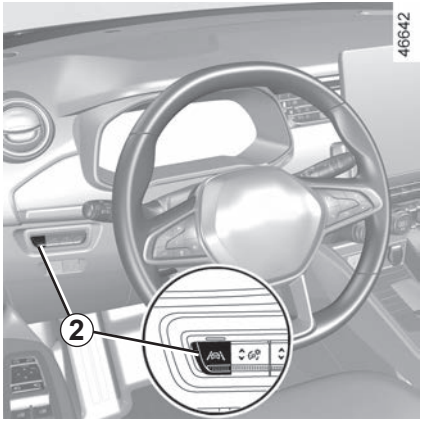

Activation/deactivation

To activate the function, press the ***2*** switch as many times as required to select “Lane Keeping Assist” on the instrument panel.

The “Lane Keeping activated” message and “ ” warning light are displayed on the instrument panel.

When Lane Keeping Assist is activated, the “Lane Departure Warning” function is automatically activated. ➥ 2.35.

To disable the function, press the ***2*** switch as many times as required to select “Lane Keeping deactivated” on the instrument panel.

Warning light goes out on the instrument panel.

Note: deactivating the “Lane Keeping Assist” function causes deactivation of the “Lane Departure Warning” function.

Each time the vehicle is started, the function continues the mode saved the last time the engine was stopped.

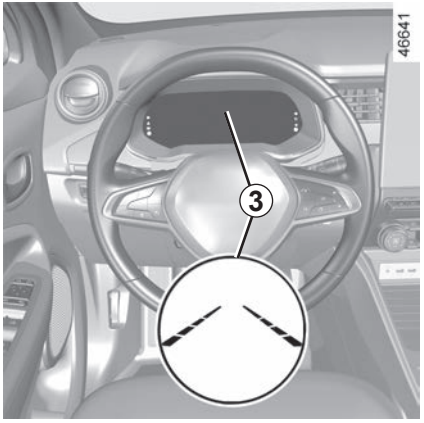

Operation

When the function is activated, the warning light and the left and right lines ***3*** are displayed in grey on the instrument panel.

The function is set to operate when the vehicle speed is between approximately 43 mph (70 km/h) and 112 mph (180 km/h) and if the warning light and ***3*** correction indicators are coloured white.

The function operates if the vehicle breaches a line or if the vehicle approaches the roadside (divider, barrier, pavement, embankment, etc.) without the direction indicator lights being activated.

In these cases:

– the function triggers an action on the vehicle's steering system to correct the vehicle trajectory;

– the warning light and the indicator ***3*** on the side of the breached line turns to yellow on the instrument panel.

Note: on bends, the function allows for slightly cutting the bend.

If the corrective action on the steering system is not sufficient, the warning light and ***3*** indicator on the side of the breached line turn to red on the instrument panel, accompanied by a vibration on the steering wheel.

Special case

If the system no longer detects any action by the driver on the steering wheel, the warning light illuminates in yellow on the instrument panel, accompanied by the message: "Keep hands on steering wheel" and a beep.

The beep sounds together with the warning light and the message until the driver takes control.

You can interrupt the trajectory correction at any time by moving the steering wheel.

Temporarily not available

– Very fast lane departure;
– driving continuously on a line;
– four seconds approximately after changing lanes;
– tight bends;
– impaired visibility;
– activation of one of the direction indicator lights;
– strong acceleration;
– emergency braking;
– ...

If the function is unavailable, the warning light and the left/right correction warning lights ***3*** appear in grey on the instrument panel.

Conditions for non-activation of the system

The system cannot be activated when:
– reverse gear is engaged;
– the field of vision of the camera is obstructed;
– the STOP warning light is displayed.

The warning light and the left/right line warning lights are displayed in grey on the instrument panel.

Adjustment

With the vehicle stationary, engine running, from the multimedia screen ***4*** select the “Settings” menu, “Vehicle” tab, the “Driving assistance” menu, then “Lane”:
– “Vibration”: adjust steering wheel vibration for the “Lane Departure Warning” function;
– “Alert”: adjust the sensitivity level for line detection. To do this, select:
  – “Late”: line detected when crossing;
  – “Standard”: line detected on approach;
  – “Early”: line detected nearby.

Please refer to the multimedia instructions for further information.

Operating faults

When the system detects an operating fault, the warning light lights up on the instrument panel, with the message “Front camera to check”.
Consult an approved dealer.

This function is an additional driving aid. This function is not under any circumstances intended to replace the due care and attention of the driver, who should at all times be in control of the vehicle.

System servicing/repairs

– In the event of an impact, the camera alignment may be changed, and its operation may consequently be affected. Deactivate the function and consult an authorised dealer.
– Any work in the area where the camera is located (repairs, replacements, windscreen modifications etc.) must be carried out by a qualified professional.

Only an authorised dealer is qualified to service the system.

In the event of system disturbance

Some conditions can disturb or damage the operation of the system, such as:
– windscreen obscured (by dirt, ice, snow, condensation etc.);
– a complex environment (tunnel etc.);
– poor weather conditions (snow, hail, black ice, rain, etc.);
– poor visibility (night, fog etc.);
– the road markings are irregular or difficult to distinguish (e.g. partially erased, excessive spacing, distorted road surface);
– being dazzled (glaring sun, lights of vehicles travelling in the opposite direction etc.);
– the road is narrow, winding or undulating (tight bends etc.);
– closely following a vehicle travelling in the same lane.

In this case, the “Lane Keeping Assist” may react incorrectly or not at all.

Risk of unwanted, incorrect correction or no correction of trajectory.

Deactivating the function

You must disable the function if:
– the area of the camera has been damaged (on the windscreen side or the interior rear-view mirror side);
– the road is slippery (snow, black ice, aquaplaning, gravel etc.) ;
– poor visibility (night, fog etc.);
– the windscreen is cracked or distorted (do not carry out windscreen repairs in this area; have it changed by an Authorised Dealer);
– the vehicle is towing a trailer or a caravan;
– the vehicle is entering an area with several surface markings (an area with road works etc.).

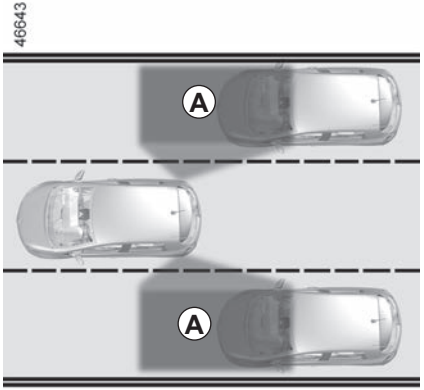

This system alerts the driver to other vehicles in the detection zone ***A***.

The system is activated when the vehicle's speed is between approximately 19 mph (30 km/h) and 87 mph (140 km/h).

This function uses sensors ***1*** installed in the front and rear bumper of both sides.

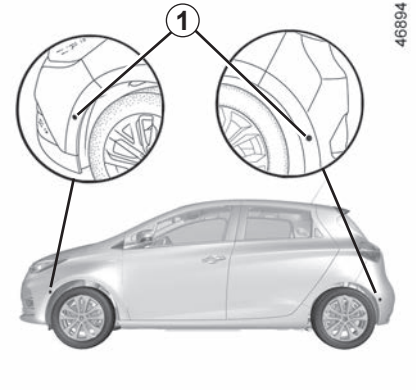

Special feature

Make sure that the sensors are not obscured (by dirt, mud, snow, etc.).

If a sensor is obscured, the message "Blind spotclean sensor" will appear on the instrument panel. Clean the sensors.

This function is an additional aid which indicates other vehicles in the blind spot area.

It can never in any case be a substitute for care nor for the driver's responsibility while in charge of his vehicle.

The driver should always be ready for sudden incidents while driving: always ensure that there are no moving obstacles (such as a child, animal, pushchair or bicycle) or small, narrow objects such as stones or posts in the blind spot when manoeuvring.

Activation/deactivation

Vehicle stationary, engine running, from the multimedia screen ***2***, select the “Settings” menu, “Vehicle” tab, select the “Driving assistance” menu, “Blind spot alert”, then select ON or OFF.

The system’s detection range operates according to a standard lane width. If you are driving in narrow traffic lanes, it may detect vehicles in other lanes.

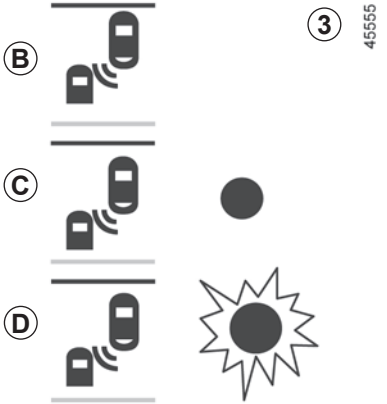

Indicator *3*

An indicator light ***3*** is located on each rear view mirror ***4***.

Note: clean the rear view mirrors ***4*** regularly so that the indicators ***3*** can be seen.

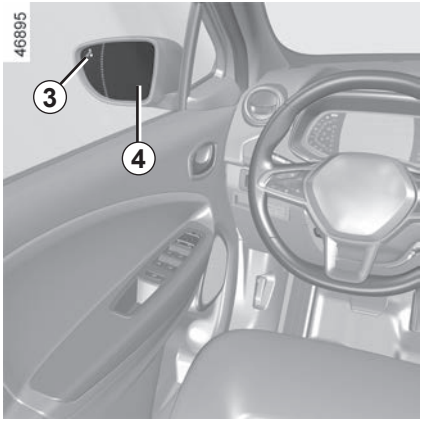

Operation

This function gives a warning:

– when the vehicle speed is between approximately 19 mph (30 km/h) and 87 mph (140 km/h);
– when another vehicle is in the blind spot area and travelling in the same direction as your vehicle.

If another vehicle is being overtaken, the indicator ***3*** will be activated only if that vehicle remains in the blind spot for more than one second.

Display *B*

The function is activated and has not detected any vehicles.

Display *C*

First warning: the indicator ***3*** means that a vehicle has been detected in the blind spot.

Display *D*

When the direction indicator is activated, the indicator light ***3*** flashes when a vehicle is detected in the blind spot on the side towards which you are about to steer. If you cancel the direction indicator, the function will return to the initial warning (display ***C***).

Because sensors have been installed in the bumpers, any work (repairs, replacements, touching up of paintwork) must be carried out by a qualified professional.

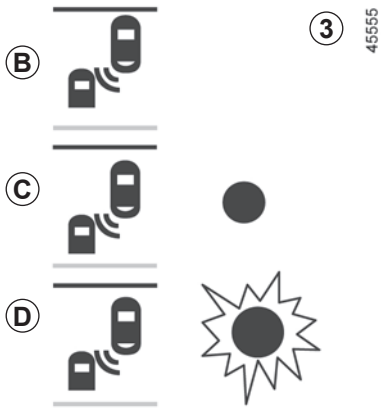

Conditions for non-function

– If the object is not moving;

– if traffic is heavy;

– the road is winding;

– if front and rear sensors both detect an object at the same time (e.g. when passing an articulated lorry).

– ...

Operating faults

If the system detects a fault, the message “Check blind spot alert” is displayed on the instrument panel. Call an approved Dealer.

The system’s detection range operates according to a standard lane width. If you are driving in wide traffic lanes, the system might not be able to detect a vehicle in the blind spot.

The system might be disrupted momentarily if it is exposed to strong electromagnetic waves (as beneath high-tension power lines) or to very poor weather conditions (heavy rain, snow etc.). Remain aware of driving conditions.

There is a risk of accidents.

This function is an additional driving aid. This function is not under any circumstances intended to replace the due care and attention of the driver, who should at all times be in control of the vehicle.

The driver should always adapt their speed to the traffic conditions, regardless of the system indications.

The system should under no circumstances be taken to be an obstacle detector or an anti-collision system.

System servicing/repairs

– In the event of an impact, the alignment of the sensors may be changed and its operation may consequently be affected. Deactivate the function and consult an authorised dealer.

– Any work in the area where the sensors are located (repairs, replacements, etc.) must be carried out by a qualified professional.

Only an authorised dealer is qualified to service the system.

System disturbance

Some conditions can disturb or damage the operation of the system, such as:

– complex surroundings (metal bridges, tunnels, roads with barriers at the edge, etc.);

– poor weather conditions (snow, hail, black ice, etc.).

Risk of false alarms or absence of warnings

In the event of the system behaving abnormally, deactivate it and consult an authorised dealer.

Limitation of the system operation

– The sensors must be kept clean and free of modifications in order for the system to operate correctly.

– Small objects moving close to the vehicle (motorcycles, bicycles, pedestrians, etc.) may not be recognised by the system.

– When the vehicle enters corners and curves, the system may temporarily cease to detect vehicles in adjacent lanes.

– The system may not react when there is a significant difference in speed with other vehicles.

– If the vehicle is being overtaken by a long vehicle (e.g. heavy goods vehicle overtaking at a similar speed to the vehicle) the system may interrupt the warning before the end of the manoeuvre.

– The vehicle is travelling on a winding road.

Deactivating the function

You must disable the function if the sensors have been damaged (rear bumper).

DETECTION OF ROAD SIGNS (1/4)

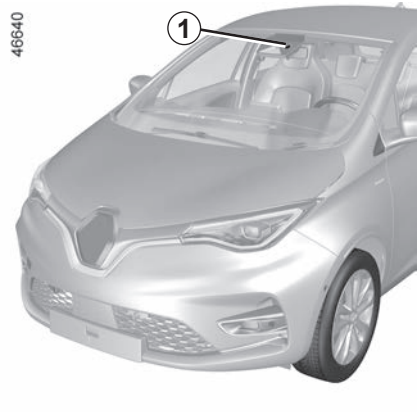

The system detects speed limit signs on the side of the road and displays the speed limit on the instrument panel.

It mainly uses information taken from the camera ***1***, attached to the windscreen behind the rear view mirror.

Note: make sure the windscreen is not obscured (dirt, mud, snow, condensation etc.).

For vehicles which are equipped with it, the system also uses information from the navigation system.

Once the speed limiter is activated, you can adjust the speed limiter indication displayed by the system.

If the limit speed is exceeded, the display panel is modified to warn the driver.

For vehicles equipped with a navigation system and if the vehicle is travelling in a country where the speed units differ from those of the vehicle, the system displays the speed limit sign in the unit of the country, alongside the speed limit converted to the unit used by the vehicle's instrument panel.

For countries where the speed limit is reduced during rainy weather on some types of roads, on vehicles equipped with a navigation system, the system can modify the limited speed after a few seconds of wiping the windscreen.

Special situations

The system does not take into account exceptional speed limit measures, such as peak pollution days.

Activating/deactivating the system

Vehicles fitted with a multimedia screen.

Vehicle stationary, engine running, from the multimedia screen ***2*** select the “Settings” menu, “Vehicle” tab, the “Driving assistance” menu, “Traffic signs”, then select “ON” or “OFF”.

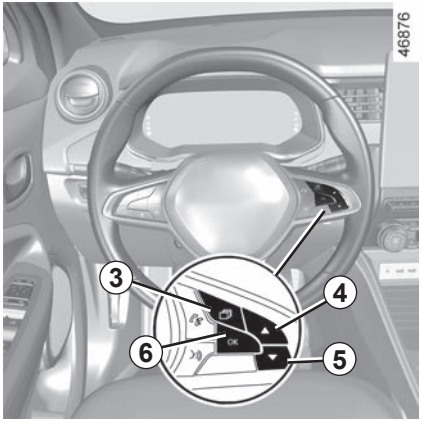

With the function activated, depending on local regulations, you can activate the “Risk area display” option. The system will notify you of the distance separating you from this zone, and while you are travelling in the zone.

Vehicles not fitted with a multimedia screen

– With the vehicle stationary, press switch ***3***, as many times as required to reach the “Vehicle” tab;
– press the ***4*** or ***5*** control repeatedly to reach the “Settings” menu. Press the switch ***6*** **OK**;
– press the ***4*** or ***5*** control repeatedly to reach the “DRIVING ASSIST” menu. Press the switch ***6*** **OK**;
– press the ***4*** or ***5*** control repeatedly to reach the “Speed alert” menu and press the ***6*** **OK** switch;
– press the ***6*** **OK** switch to activate or deactivate the function:

☑ function activated

☐ function deactivated

Operation

Warning lights

The function displays the following warning lights:

7 Speed limit road signs

8 Additional road signs (start or end of “No overtaking” zone, slip road speed limit, speed in case of a caravan, speed limit with length of application, etc.)

If the speed limit is exceeded, the circle around the panel flashes (***7*** warning light) along with a sound signal to warn the driver.

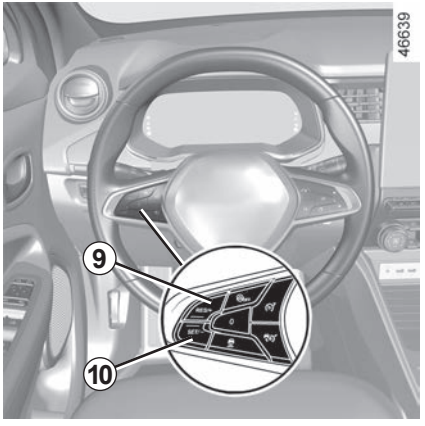

Varying the limit speed

If the speed limit notification differs from the detected speed value, press and hold the following switches:

– ***9*** (RES/+) to increase the notification speed to the detected speed;
– ***10*** (SET/-) to reduce the notification speed to the detected speed.

Operating faults

The system cannot detect the speed limit if:

– the windscreen is not clean;

– the camera is blinded by the sun;

– there is insufficient visibility (night, fog etc.);

– the signs are not legible (snow, etc.) or are hidden (by another vehicle or by trees);

– the information taken from the navigation system is not up to date.

This function is an additional driving aid. This function is not under any circumstances intended to replace the due care and attention of the driver, who should at all times be in control of the vehicle.

The driver should always adapt their speed to the traffic conditions, regardless of the system indications.

The system detects speed limit signs and does not detect other signs (e.g. entry/exit to/from urban areas, etc.).

The system may not detect all speed limit signs or may interpret them incorrectly.

The driver should not ignore signs that are not detected by the system and should, as a priority, comply with the traffic signage and the highway code.

In the event of poor visibility (fog, snow, frost, etc.), it is possible that the system may not indicate the correct speed to the driver.

The driver should always adapt their speed to the traffic conditions, regardless of the system indications.

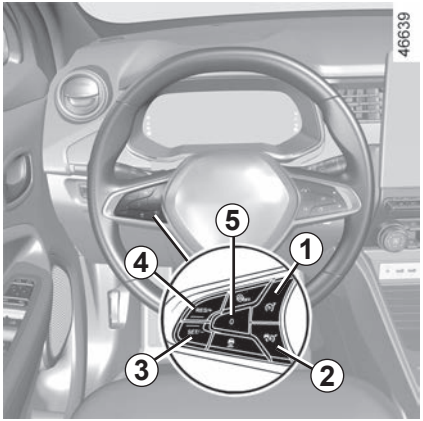

The speed limiter function helps you stay within the driving speed limit that you choose, known as the **limit speed**.

You can link the speed limiter to the “Road sign detection” function. ➥ 2.49.

Controls

1 Speed limiter On/Off switch.

2 Cruise control On/Off switch.

3 Switch to activate and decrease the limit speed (SET/-).

4 Switch to activate and increase the limit speed or to set the stored limit speed (RES/+).

5 Speed limiter function standby (with limited speed memory) (0).

Driving

When a limit speed has been set but not yet reached, driving is similar to driving a vehicle without the speed limiter function.

Once you have reached the stored speed, no effort on the accelerator pedal will allow you to exceed the programmed speed except in an emergency (refer to information on “Exceeding the limit speed”).

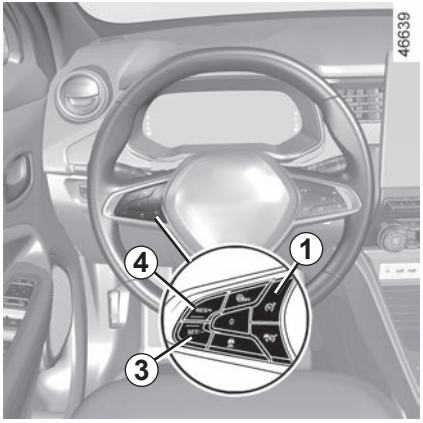

Switching on

Press switch ***1***. The ***6*** warning light appears in grey. The “Speed limiter ON” message appears on the instrument panel accompanied by dashes to indicate that the speed limiter function is in operation, waiting to store a limit speed.

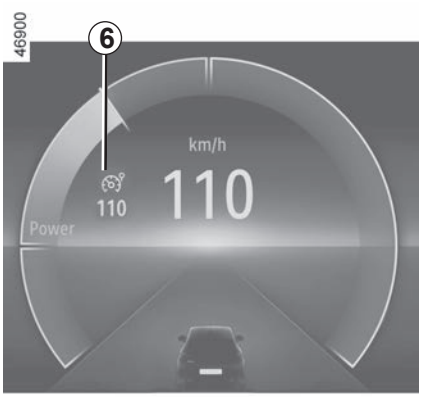

To store the current speed, press the ***4*** switch (RES/+) or the ***3*** switch (SET/-): the limit speed replaces the dashes and, depending on the vehicle, the ***6*** warning light appears in white.
The minimum stored speed is 20 mph (30 km/h).

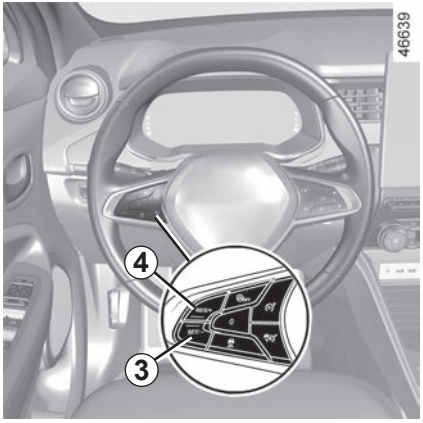

Varying the limit speed

The limit speed may be changed by pressing repeatedly or holding down:

– switch ***4*** (RES/+) to increase speed;

– switch ***3*** (SET/-) to reduce speed.

Exceeding the limit speed

It is possible to exceed the limit speed at any time. To do this: press the accelerator pedal **firmly and fully** (beyond the resistance point).

While the speed is being exceeded, the speed limiter flashes red on the instrument panel. Then, release the accelerator pedal: the speed limiter function will return as soon as you reach a speed lower than the memorised speed.

If the speed limiter is not available (after several attempts to activate), contact an approved dealer.

Limited speed cannot be maintained

When driving down a steep gradient, the system may not maintain the limit speed: the limit speed flashes in red on the instrument panel and an audible signal sounds at regular intervals to inform you of this situation.

The speed limiter function is in no way linked to the braking system.

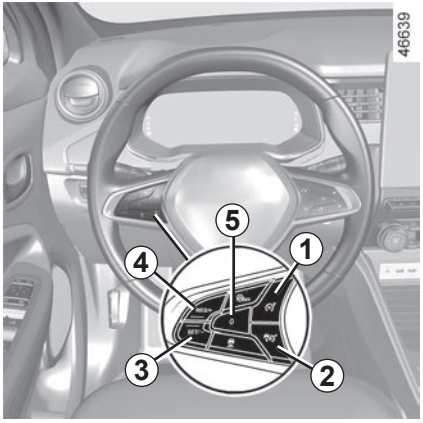

Putting the function on standby

The speed limiter function is suspended when you press switch ***5*** (0). The limit speed is stored and displayed in grey on the instrument panel.

Recalling the limit speed

If a speed has been stored, it can be recalled by pressing the ***4*** switch.

When the speed limiter is set to standby, pressing the ***3*** switch reactivates the function without taking into account the memorised speed: the speed at which the vehicle is moving is taken into account.

Switching off the function

The speed limiter function is interrupted:

– when you press the ***1*** switch. In this case, the speed is no longer stored;

– when you press the ***2*** switch. In this case the cruise control is selected and there is no stored speed.

The warning light ***6*** disappears from the instrument panel to confirm that the function is no longer active.

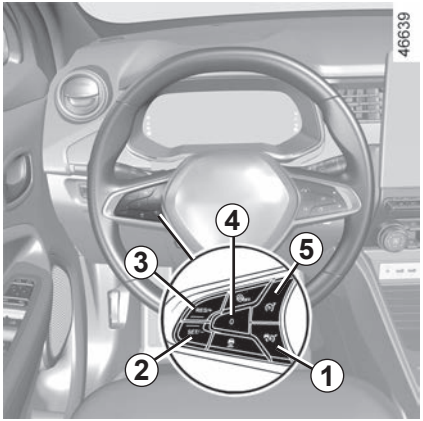

The cruise control function helps you to maintain your driving speed at a speed that you choose, called the **cruising speed.**

This cruising speed may be set at any speed above 19 mph (30 km/h).

Controls

1 Cruise control On/Off switch.

2 Switch to activate and decrease cruising speed (**SET/-**).

3 Switch to activate and increase cruising speed or to recall the memorised cruising speed (**RES/+**).

4 Switch the function to standby (with cruising speed saved) (**0**).

5 Speed limiter On/Off switch.

This function is an additional driving aid.

It can under no circumstances replace the driver's responsibility to respect speed limits or to be vigilant. The driver must always be in control of the vehicle.

Cruise control must not be used in heavy traffic, on winding or slippery roads (black ice, aquaplaning, gravel) and during bad weather (fog, rain, side winds etc.).

There is a risk of accidents.

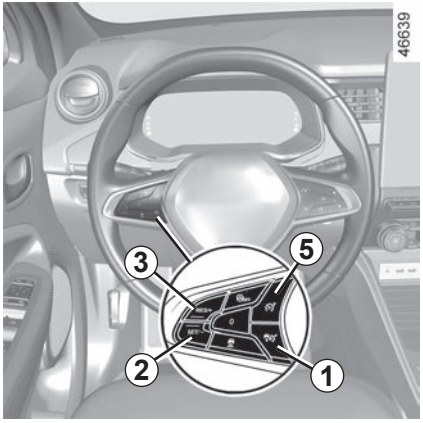

Switching on

Press switch ***1***.

The ***6*** warning light appears in grey.

The “Cruise control ON” message appears on the instrument panel accompanied by dashes to indicate that the cruise control function is in operation and waiting to memorise a cruising speed.

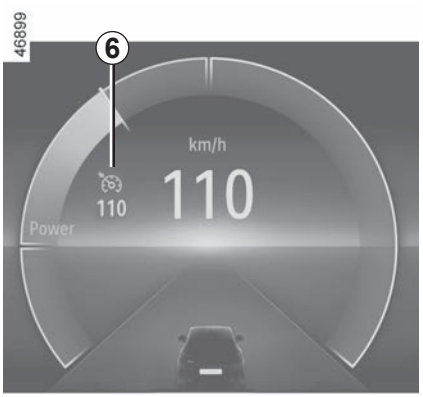

Activating cruise control

At a steady speed above approximately 19 mph (30 km/h), press the ***2*** (**SET/-**) switch or the ***3*** (**RES/+**) switch : the function is activated and the current speed is taken into account.
The cruising speed replaces the dashes. Cruise control is confirmed when the memorised speed and warning light appear in green ***6***.

If you try to activate the function below 19 mph (30 km/h), the message “Invalid Speed” will be displayed and the function will remain inactive.

Driving

Once a cruising speed is registered and the cruise control function is active, you may lift your foot off the accelerator pedal.

Please note that you must keep your foot close to the pedals in order to react in an emergency.

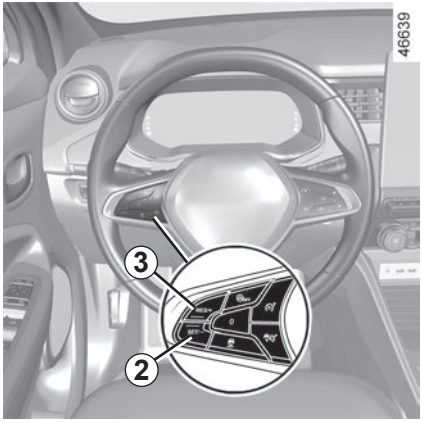

Adjusting the cruising speed

The cruising speed may be changed by pressing the following repeatedly:

– the ***2*** switch (**SET/-**) to reduce the speed;
– the ***3*** switch (**RES/+**) to increase the speed.

Note: press and hold one of the switches to modify speed by successive increments.

Exceeding the cruising speed

The cruising speed may be exceeded at any time by depressing the accelerator pedal.

While it is being exceeded, the cruising speed flashes on the instrument panel.

Then, release the accelerator pedal: after a few seconds, the vehicle will automatically return to its set cruising speed.

Cruising speed cannot be maintained

When driving down a steep gradient, the system is unable to maintain the cruising speed: the stored speed will flash on the instrument panel information display to inform you of this situation.

If the cruise control is no longer available (after several attempts to activate it), contact an approved dealer.

The cruise control function is in no way linked to the braking system.

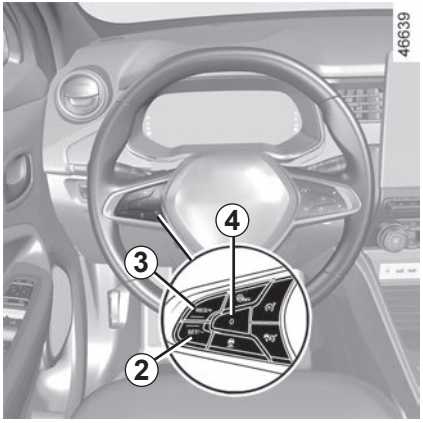

Putting the function on standby

The function is set to standby if you:

– ***4*** switch (0);

– the brake pedal;

– move to the neutral position.

The cruising speed is stored and displayed in grey on the instrument panel.

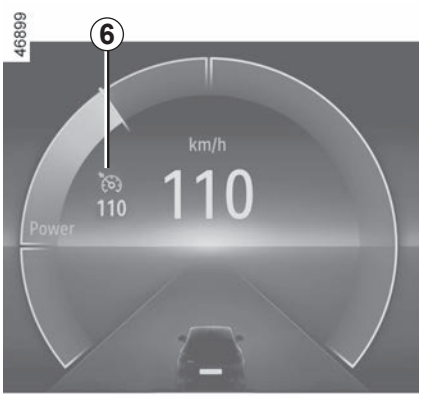

Returning to the cruising speed

If a speed is stored, it can be recalled, once you are sure that the road conditions are suitable (traffic, road surface, weather conditions, etc.). Press the switch ***3*** (**RES/+**) if the vehicle speed is above 19 mph (30 km/h).

When the speed is stored, cruise control activation s confirmed by display of the cruising speed and, depending on the vehicle, the ***6*** warning light is displayed.

NB: if the speed previously stored is much higher than the current speed, the vehicle will accelerate more rapidly to reach this threshold.

When the cruise control is set to standby, pressing switch ***2*** (**SET/-**) reactivates the cruise control function without taking into account the stored speed: it is the speed at which the vehicle is moving that is taken into account.

Cruise control switches to standby each time ECO mode is activated or deactivated ➥ 2.13.

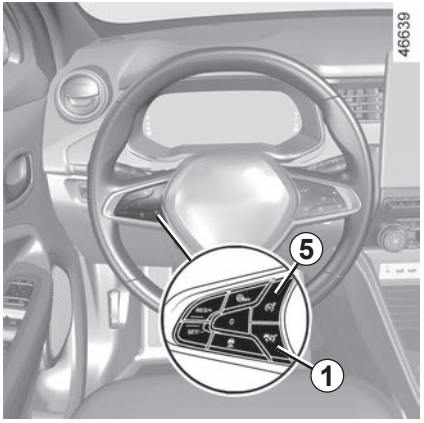

Switching off the function

The cruise control function is interrupted:

– when you press the ***1*** switch. In this case, the speed is no longer stored;

– when you press the ***5*** switch. In this case the speed limiter is selected and there is no stored speed.

The warning light ***6*** disappears from the instrument panel to confirm that the function is no longer active.

Putting the cruise control on standby or switching it off does not cause a rapid reduction in speed: you must brake by depressing the brake pedal.

“AUTOHOLD” FUNCTION

Vehicle stopped (e.g. at a red light, an intersection, a traffic jam, etc.), the function ensures braking force even when the driver releases the brake pedal.
The braking force is released as soon as the driver accelerates sufficiently with a gear engaged.

Activation

Press switch ***2***.
The switch warning light ***2*** illuminates to confirm that the function is activated.

Deactivation

Press the brake pedal and ***2*** switch simultaneously.
The switch warning light ***2*** turns off, confirming that the function is deactivated.
If the braking force is maintained, the parking brake is applied automatically when:
– the driver exits the vehicle;
or
– the vehicle is immobilised for more than approximately three minutes.

Conditions for maintaining the braking force

The following conditions must be met:
– the seat belt for the driver is fastened;
and
– the electronic parking brake is released;
and
– the vehicle is not stationary on a very steep slope.

The maintained braking force is confirmed by the warning light on the instrument panel.

Conditions for interrupting the braking force

The following conditions must be met:
– the driver accelerates sufficiently with a gear engaged;
or
– the driver disables the function.

Warning light goes out on the instrument panel.

Upon each start-up, the function continues the mode set at the time the engine was last switched off.

Before leaving the vehicle, check that the electronic parking brake is fully applied. The indicator light on switch ***1*** and the warning light on the instrument panel illuminate to show that the parking brake is applied and switch off when the doors are locked.

Operating principle

Ultrasonic sensors, indicated by arrows ***1***, are fitted in the bumpers to measure the distance between the vehicle and an obstacle.

Depending on the vehicle, the system detects obstacles to the front, the rear and the sides of the vehicle.

The parking distance control system is only activated when the vehicle is driven at a speed below approximately 6 mph (10 km/h).

This measurement is indicated by beeps which become more frequent the closer you come to the obstacle, until they become a continuous beep when the vehicle is approximately 20 to 30 centimetres from the obstacle.

Location of the ultrasonic sensors *1*

Ensure that the ultrasonic sensors indicated by the arrows ***1*** are not obscured (by dirt, mud, snow, a badly fitted/attached number plate, etc.), impacted, modified (including paintwork) or obstructed by any accessory fitted to the rear and/or, depending on the vehicle, to the front or sides of your vehicle.

This function is an additional driving aid.

Under no circumstances should it replace the driver's care or responsibility whilst reversing.

The driver should always be ready for sudden incidents while driving: always ensure that there are no small, narrow moving obstacles (such as a child, animal, pushchair, bicycle, stone, post, etc.) in the blind spot when manoeuvring.

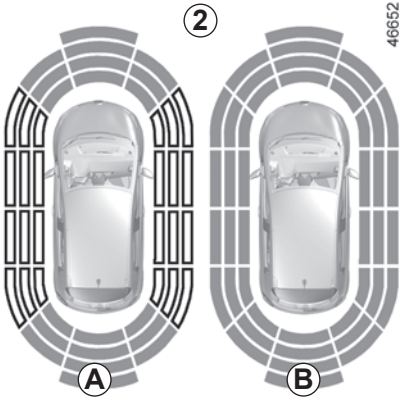

Vehicle fitted with a navigation system

Note: the display ***2*** shows the vehicle surroundings and emits beeps.
It is necessary to travel a few metres before the side detection is activated.
If all areas have a grey background, the whole area around the vehicle is being monitored:
– ***A***: analysis of the vehicle surroundings in progress;
– ***B***: analysis of the vehicle surroundings carried out.

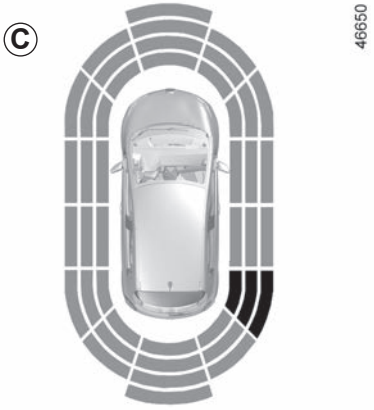

Operation

Most objects located less near the front, rear and sides of the vehicle are detected.

Depending on the distance of the obstacle, the frequency of the beep will be higher while approaching it, and will become a continuous beep around 20 cm away for obstacles to the sides, and around 30 cm for obstacles to the front or rear. Depending on the vehicle, the green, orange (or yellow depending on the vehicle) and red zones will be displayed on the ***C*** display.

Note: in the event of a change in trajectory during a manoeuvre, the risk of collision with an obstacles may be signalled late.

An impact to the underside of the vehicle while manoeuvring (e.g. striking a post, raised kerb or other street furniture) may result in damage to the vehicle (e.g. deformation of an axle).

To avoid any risk of accident, have your vehicle checked by an approved dealer.

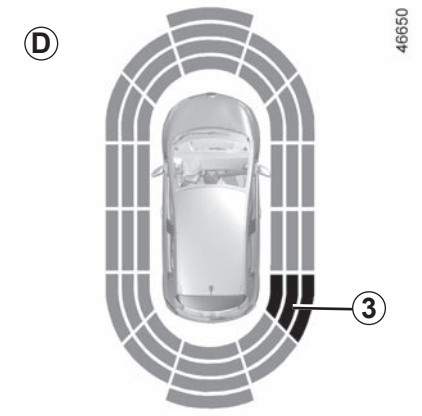

Detection of obstacles to the side
(depending on the vehicle)

Depending on the direction of the wheels, the system determines the trajectory of the vehicle and notifies the driver of any risk or otherwise of a collision with an obstacle ***3*** to the side of the vehicle.

If a side obstacle is detected:

– the beeps become faster and then sound continuously as the obstacle gets nearer. Green, orange and red zones will be displayed on the display ***D***;

– if there is no risk of collision, no beep will sound when approaching the obstacle. Green, orange and red zones will be displayed interspersed on the display ***D***.

Note: in the event of a change in trajectory during a manoeuvre, the risk of collision with an obstacle may be signalled late.

An impact to the underside of the vehicle while manoeuvring (e.g. striking a post, raised kerb or other street furniture) may result in damage to the vehicle (e.g. deformation of an axle).

To avoid any risk of accident, have your vehicle checked by an approved Dealer.

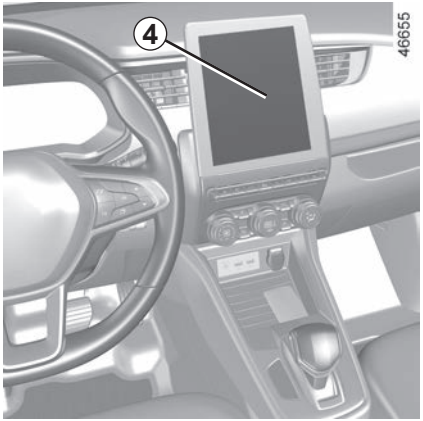

Activation/deactivation

Vehicle fitted with a navigation system

With the vehicle stationary and the engine running, from the multimedia screen ***4***, select the “Settings” menu, select the “Vehicle” tab, select the “Parking assistance” menu then select “ON” or “OFF” to activate or deactivate areas covered by the ultrasonic sensors.

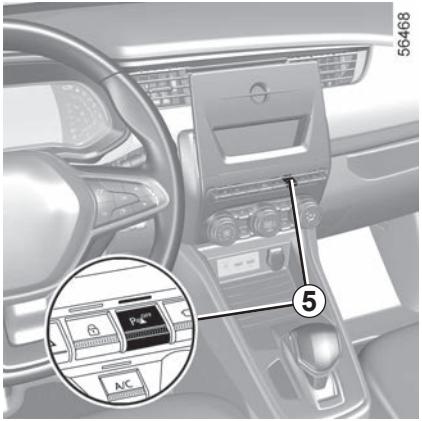

Vehicles without a navigation system

With the vehicle stationary and the engine running, press switch ***5*** to activate or deactivate the function.

Setting on vehicles not fitted with a navigation system

Depending on the vehicle, with the vehicle stationary, engine running, some settings can be adjusted from the multimedia screen ***4***.

Please refer to the multimedia instructions for further information.
Select “Settings”, “Parking assistance”.

Parking distance control audio volume

Select “Settings”, “Parking assistance”, “Sound”. Adjust the volume of Park Assist by pressing “**+**” or “**-**”.

Setting on vehicles fitted with a navigation system (continued)

System sound

Enables the system sound to be chosen. Select “Settings”, “Parking assistance”, “Sound”.

Deactivating the system sound

Activate or deactivate the parking distance control sound.

Note: if you deactivate the sound, you will no longer be notified with beeps when approaching an obstacle.

When the vehicle is travelling at a speed below approximately 6 mph (10 km/h), some noises (motorcycle, lorry, pneumatic drill etc.) may trigger the beeping sound of the parking distance control.

Parking distance control automatic deactivation

The system deactivates:

– when the vehicle speed is above approximately 6 mph (10 km/h);

– depending on the model, when the vehicle is stationary for more than approximately 5 seconds and an obstacle is detected (such as when in a traffic jam, etc.);

– when you are in position **N**;

– when an operating fault is detected.

Operating faults

If the system detects an operating fault, a beep sounds for approximately three seconds each time the reverse gear is selected and the message “Check parking distance control” appears on the instrument panel. Check that your ultrasonic sensors are clean. If the message remains, contact an approved dealer.

An impact to the underside of the vehicle while manoeuvring (e.g. striking a post, raised kerb or other street furniture) may result in damage to the vehicle (e.g. deformation of an axle).

To avoid any risk of accident, have your vehicle checked by an approved dealer.

System servicing/repairs

– In the event of an impact, the alignment of the sensors may be altered and their operation may consequently be affected. Deactivate the function and consult an authorised dealer.

– Any work in the area where the sensors are located (repairs, replacements, etc.) must be carried out by a qualified professional.

Only an authorised dealer is qualified to service the system.

System disturbance

Some conditions can disrupt or damage the operation of the system, for example:

– poor weather conditions (rain, snow, hail, black ice, etc.);

– in the event of exposure to strong electromagnetic waves (under high-voltage lines, etc.);

– some types of noise (motorcycle, lorry, pneumatic drill, etc.).

Risk of false alarms or absence of warnings

In the event of the system behaving abnormally, deactivate it and consult an authorised dealer.

Limitation of the system operation

– The area around the sensors must be kept clean and free of any modifications in order to ensure the proper operation of the system.
– Small objects moving close to the vehicle (motorcycles, bicycles, pedestrians, etc.) may not be recognised by the system.
– The system may not detect objects that are too close to the vehicle.
– The system may not provide a warning when the other vehicles or objects are travelling at a significantly different speed.
– During a change in trajectory, during a manoeuvre, the system may report obstacles with a delay.

Deactivating the function

You must disable the function if the sensor area has been damaged (rear bumper).

Operation

When the vehicle is reversing, the camera ***1*** on the luggage compartment lid transmits a view of the area surrounding the rear of the vehicle to the multimedia display ***2*** accompanied by two guiding lines ***3*** and ***4*** (fixed and mobile).

This system uses several guidelines for its operation (mobile for trajectory and fixed for distance). When the red zone is reached, use the bumper image to stop accurately.

Fixed clearance gauge *3*

The fixed clearance gauge comprises coloured markers ***A***, ***B*** and ***C*** indicating the distance behind the vehicle:

– ***A*** (red) approximately 30 centimetres from the vehicle;
– ***B*** (yellow) approximately 70 centimetres from the vehicle;
– ***C*** (green) approximately 150 centimetres from the vehicle.

This gauge remains fixed and indicates the vehicle trajectory if the wheels are in line with the vehicle.

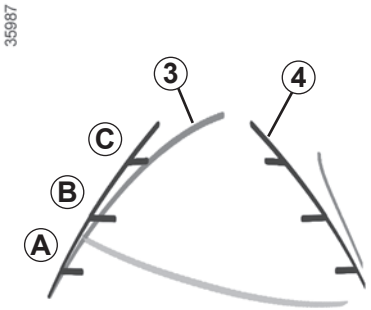

***4* moving guide line:**

This is shown in blue on the multimedia screen ***2***. It indicates the vehicle trajectory according to the position of the steering wheel.

Special feature

Make sure that the camera is not obscured (by dirt, mud, snow, condensation etc.).

Activating, deactivating the reversing camera

With the vehicle stationary and the engine running, from the multimedia screen ***2*** you can add or remove the guides and adjust the camera image settings (brightness, contrast etc.). Please refer to the multimedia instructions for further information.

Each time the vehicle is started, the function continues the mode saved the last time the engine was stopped.

This function is an additional aid. It cannot, therefore, under any circumstances replace the vigilance or the responsibility of the driver.

The driver should always be ready for sudden incidents while driving: always ensure that there are no small, narrow moving obstacles (such as a child, animal, pushchair, bicycle, stone, post, etc.) in the blind spot when manoeuvring.

Operating faults

When reverse gear is engaged, if the system detects an operating fault, a black screen is displayed temporarily on the multimedia screen **2**.

This may be caused by a fault affecting the camera or screen (clearness, fixed image, delayed communication etc.).

If the temporary display of the black screen persists, please consult an approved dealer.

The screen shows a reverse mirror image.

The frames are a representation projected on a flat surface. This information is to not be taken into account when superimposed on a vertical object or an object on the ground.

Objects which appear on the edge of the screen may be deformed.

In very bright light (snow, vehicle in sunshine, etc.), the camera vision may be adversely affected.

If the boot is open or poorly closed, the message “Tailgate open” appears and the camera display disappears.

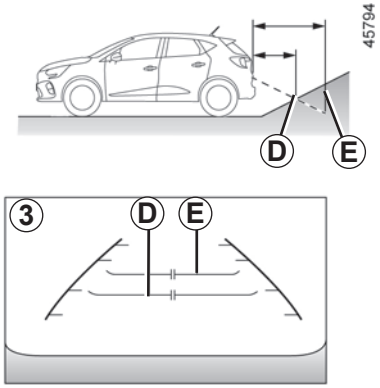

Difference between the estimated distance and actual distance

Reversing towards a steep uphill slope

The fixed guidelines ***3*** show the distances as closer than they actually are.

The objects shown on the screen are actually further away on the slope.

For example, if the screen displays an object at ***D***, the actual distance of the object is at ***E***.

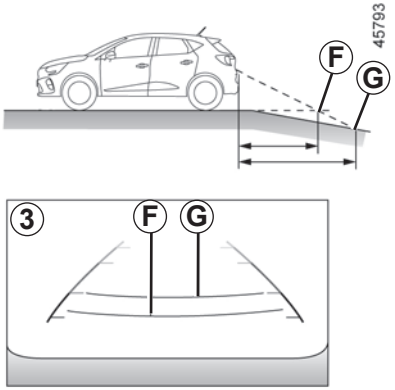

Reversing towards a steep downhill slope

The fixed guidelines ***3*** show the distances as further than they actually are.

Therefore, the objects shown on the screen are actually closer on the slope.

For example, if the screen displays an object at ***G***, the actual distance of the object is at ***F***.

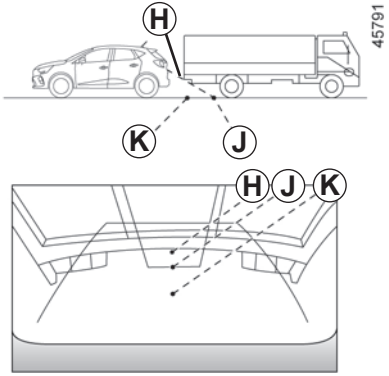

Reversing towards a protruding object

Position ***H*** seems further than position ***J*** on the screen. However, position ***H*** is at the same distance as position ***K***.

The trajectory indicated by the fixed and mobile guidelines do not take into account the height of the object. So there is a risk that the vehicle may collide with the object when reversing towards position ***K***.

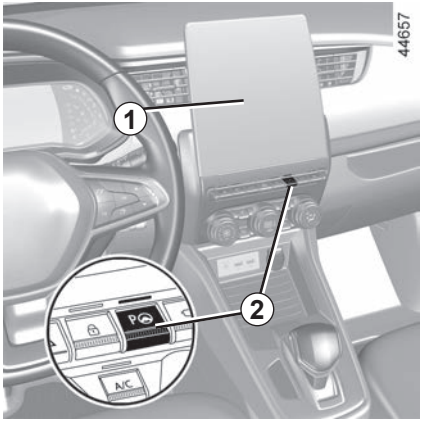

Using ultrasonic detectors as indicated by the ***3*** arrows installed in the vehicle bumpers, this function helps to find accessible parking spaces and assists in the parking manoeuvre.

Remove your hands from the steering wheel, you only control:

– the accelerator pedal;

– the brake pedal;

– the gear lever.

You can retake control at any time by operating the steering wheel.

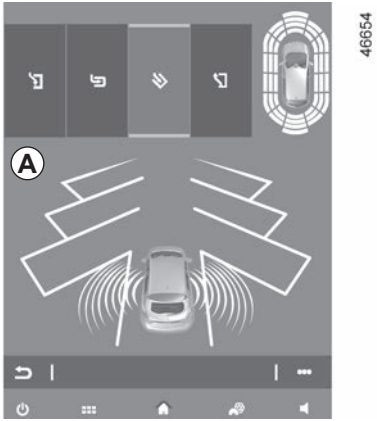

Switching on

While the engine is running, vehicle stationary or driving at less than approximately 19 mph (30 km/h):

– press switch ***2***. The indicator light in switch ***2*** lights up and display ***A*** appears on the multimedia screen ***1***.

– set the direction indicator to the side of the vehicle where you want to park.

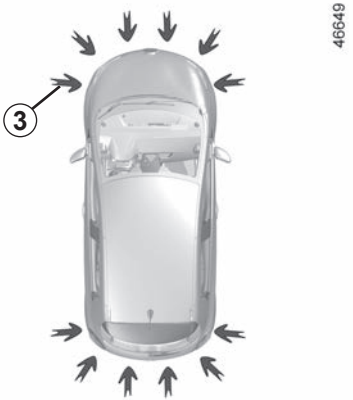

Special features

Ensure that the ultrasonic sensors indicated by arrows ***3*** are not obscured (by dirt, mud, snow, etc.).

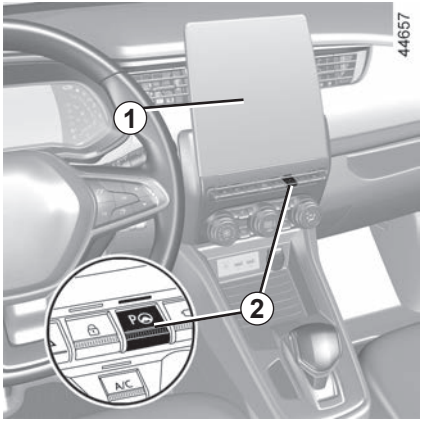

Choice of manoeuvre

The system can perform four types of manoeuvres:
– parallel parking;
– perpendicular parking;
– angle parking;
– moving out of a parallel parking space.

From the ***1*** multimedia screen, select the manoeuvre to carry out.

Note: when starting the vehicle, or after having successfully completed parallel parking using the system, the default manoeuvre proposed by the system is assistance in exiting a parallel parking space. In other cases, the default manoeuvre can be set from the multimedia screen ***1***. Please refer to the multimedia instructions for further information.

The system start up is accompanied by activation of the parking distance control and, on those vehicles equipped, the reversing camera to help the driver visualise the manoeuvre. ➥ 2.63, ➥ 2.70.

Operation

Parking

As long as the vehicle speed is less than 19 mph (30 km/h), the system searches for available parking spaces on the side of the vehicle chosen by the driver.

Note: if parking spaces are available on the other side of the vehicle, set the direction indicator to the other direction to enable the system to search for spaces.

Once a space has been found, it is displayed on the multimedia screen, indicated by a small letter “P”. Drive slowly, with the direction indicators activated on the side where the space is available, until the “Stop” message is displayed and a beep sounds.

The space is then indicated on the multimedia screen by a capital letter “P”.

– Stop the vehicle;

– select reverse gear.

The indicator light lights up on the instrument panel and a beep sounds.

– Release the steering wheel;

– follow the instructions shown on the multifunction screen ***1***.

Your speed should not exceed around 4 mph (7 km/h).

Once the warning light on the instrument panel goes off and a beep sounds, the manoeuvre has been completed.

This function is an additional driving aid.

Therefore, it can under no circumstances replace the driver’s vigilance and responsibility during manoeuvres (the driver must always be ready to brake).

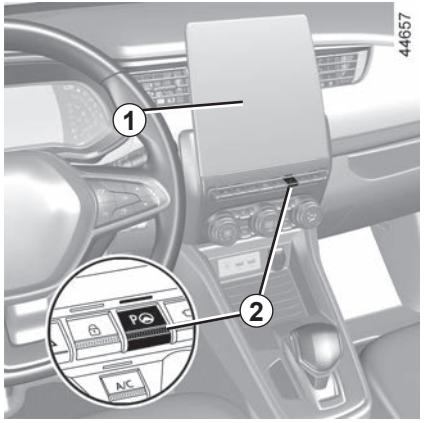

Exiting a parallel parking space

– Briefly press the ***2*** switch;

– select “Exit parallel parking space” mode;

– activate the direction indicator on the side you wish to go out of;

– press and hold switch ***2*** (approx. two seconds).

The indicator light lights up on the instrument panel and a beep sounds.

– Release the steering wheel;

– carry out manoeuvres at the front and rear by following the instructions shown on the multimedia screen ***1*** and using the parking distance control system alerts.

Your speed should not exceed around 4 mph (7 km/h).

Once the vehicle is in a position to exit the parking space, the warning light disappears from the instrument panel and a sound signal and message appear on the multimedia screen ***1*** to confirm that the manoeuvre is complete.

When manoeuvring, the steering wheel may turn quickly: do not put your hands inside, and make sure that nothing is caught inside.

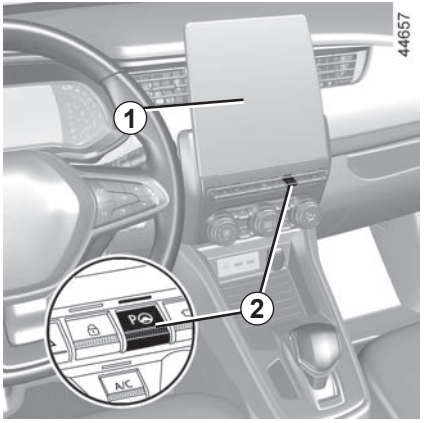

Suspending/Resuming the manoeuvre

The manoeuvre is suspended in the following circumstances:

– you take control of the wheel;

– the vehicle is stationary for too long;

– an obstacle in the direction of movement prevents the manoeuvre from being completed;

– the engine stops;

– a door or the luggage compartment is opened.

The warning light on the ***2*** switch turns off and the warning light disappears from the instrument panel and a sound signal confirms that the manoeuvre has been suspended. The reason for suspending the manoeuvre will be displayed on the multimedia screen ***1***.

Make sure:

– you have released the steering wheel;

and

– that all doors and the boot are closed;

and

– that no obstacles are in the way of the direction of movement;

and

– that the engine is started.

If the warning light on the ***2*** switch flashes, this indicates that the system is once again available to resume the manoeuvre.

To resume the manoeuvre, press and hold the ***2*** switch. The warning light on the ***2*** switch comes on and is displayed on the instrument panel.

Follow the instructions shown on the multimedia screen ***1***.

Cancelling the manoeuvre

The manoeuvre is cancelled in the following cases:

– the vehicle speed has exceeded 4 mph (7 km/h);

– by pressing switch ***2***;

– you have performed more than ten forwards/backwards movements in one manoeuvre;

– the parking distance control sensors are dirty or blocked;

– the vehicle wheels have skidded;

– the manoeuvre has been suspended for too long.

The warning light on the ***2*** switch turns off and the warning light disappears from the instrument panel and a sound signal confirms that the manoeuvre has been cancelled. The reason for cancelling the manoeuvre will be displayed on the multimedia screen ***1***.

This function is an additional driving aid. This function is not under any circumstances intended to replace the due care and attention of the driver, who should at all times be in control of the vehicle. Make sure that the manoeuvre complies with the applicable traffic regulations in your location.

The driver should always be ready for sudden incidents while driving: always ensure that there are no small, narrow moving obstacles (such as a child, animal, pushchair, bicycle, stone, post, etc.) in the blind spot when manoeuvring.

System servicing/repairs

– In the event of an impact, the alignment of the sensors may be changed and their operation may consequently be affected. Deactivate the function and consult an authorised dealer.
– Any work in the area where the sensors are located (repairs, replacements, exterior trim modifications, etc.) must be carried out by a qualified professional.

Only an authorised dealer is qualified to service the system.

In the event of system disturbance

Certain conditions may disrupt or impair operation of the system, such as poor weather conditions (snow, hail, ice etc.).
In the event of the system behaving abnormally, deactivate it and consult an authorised dealer.
Risk of erroneous false alarms.

Limitations of the system operation

– The system cannot detect objects located in the sensor blind spots.
– Always visually check that the parking space proposed by the system is still available and contains no obstacles.

Section 3: your comfort

Air vents 3.2
Manual air conditioning 3.4
Automatic climate control 3.7
Air conditioning: programming 3.11
Air conditioning: information and advice on use 3.13
Multimedia equipment 3.15
Electric windows 3.16
Interior lighting 3.18
Passenger compartment storage, fittings 3.19
Accessories socket 3.22
Rear bench seat: functions 3.24
Rear parcel shelf 3.25
Luggage cover 3.26
Boot, spoiler 3.27
Transporting objects in the luggage compartment 3.28

AIR VENTS: air outlets (1/2)

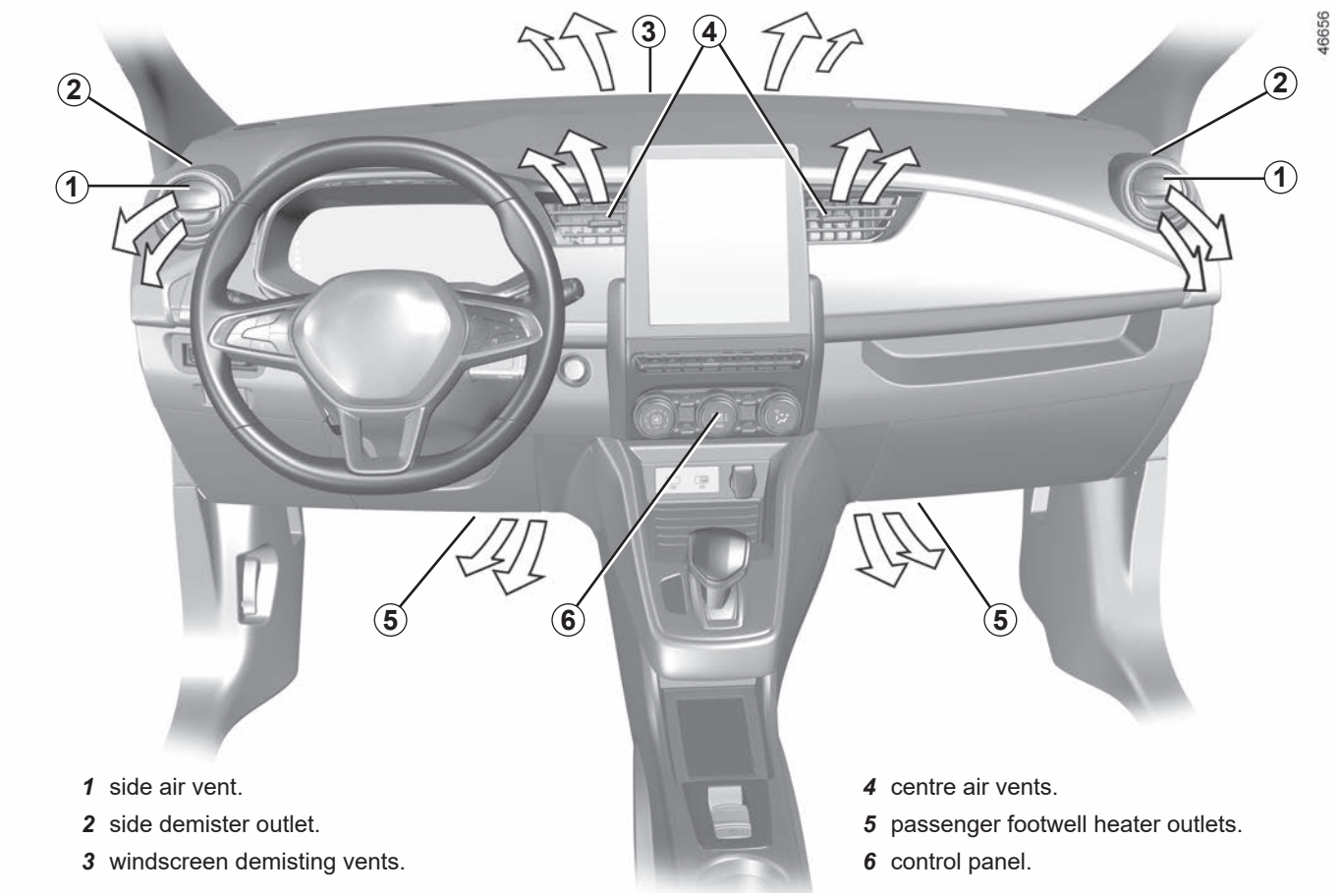

1 side air vent.

2 side demister outlet.

3 windscreen demisting vents.

4 centre air vents.

5 passenger footwell heater outlets.

6 control panel.

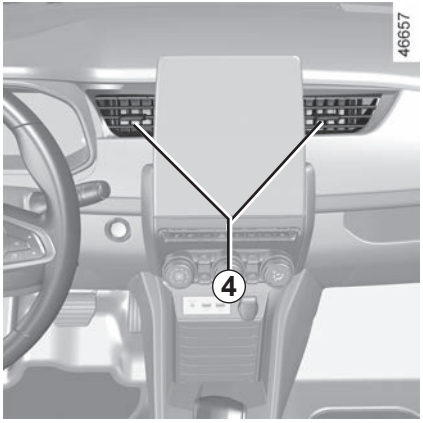

Centre air vents.

Direction

Move cursors ***4*** to the required position.

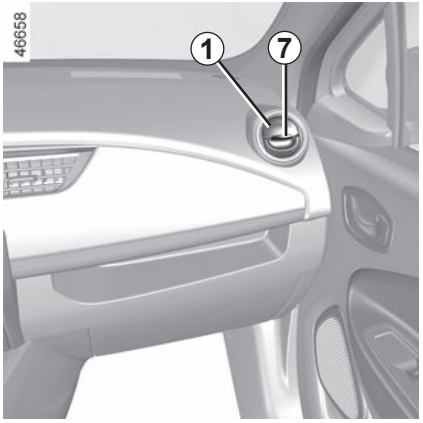

Side air vents

Air flow

To open air vent ***1***, press on the air vent (point ***7***) until it is open as far as required.

Direction

To direct the air flow, swivel side air vent ***1***.

To remove bad odours from your vehicles, only use the systems designed for this purpose. Consult an approved Dealer.

Do not add anything to the vehicle's ventilation circuit (for example, to remove bad odours).

There is a risk of damage or of fire.

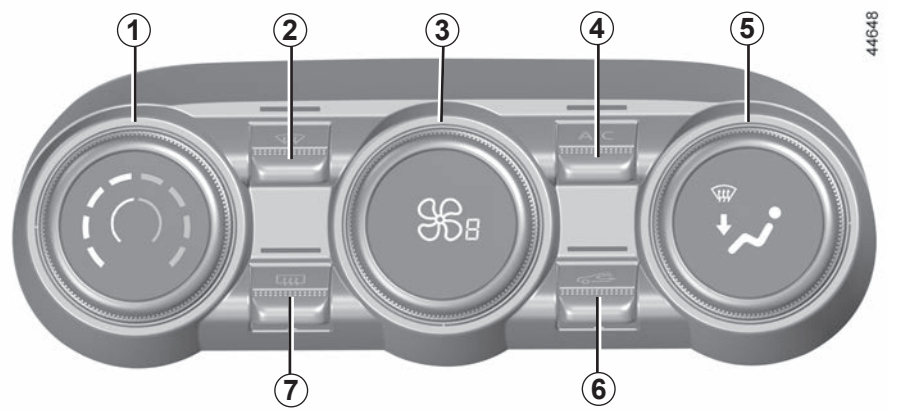

The controls

1 Adjusting the air temperature.

2 “Clear View” function.

3 Push button to adjust fan speed and stop the system.

4 Air-conditioning activation control.

5 Passenger compartment air distribution adjustment.

6 Air recirculation.

7 De-icing/demisting of the rear screen and, depending on the vehicle, the door mirrors.

Heating or air-conditioning can only be used while the engine is running.

Switching air conditioning on or off

(depending on vehicle)

The air conditioning is switched on (indicator light on) or off (indicator light off) using button ***4***.

The system cannot be switched on if the control ***3*** is set to OFF.

The air conditioning system is used for:

– lowering the temperature inside the passenger compartment;

– eliminating condensation more quickly.

Advice: to optimize vehicle range, deactivate the air conditioning when the outside temperature is comfortable.

Adjusting the ventilation speed

Turn the control ***3*** to one of the eight positions to start the ventilation system and adjust the power.

Position OFF

In this position:

– the air conditioning switches off automatically;

– the ventilation speed of air in the passenger compartment is zero;

– there is, however, a slight flow of air when the vehicle is moving.

This position should not normally be used.

Some buttons have an operating tell-tale which indicates the operating status.

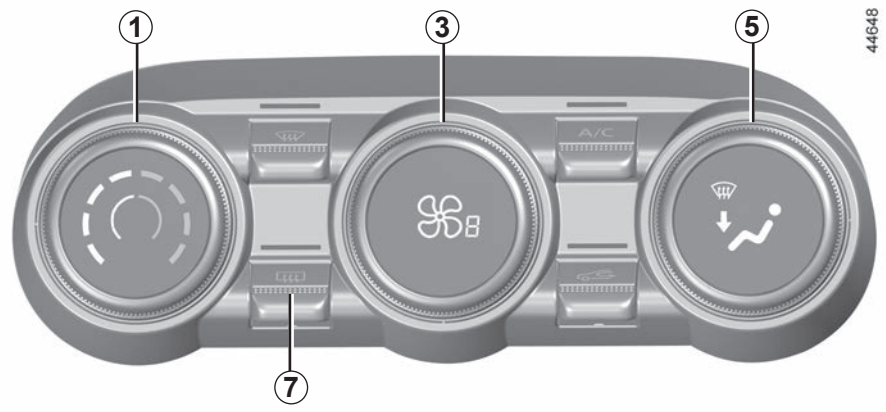

Adjusting the air temperature

Turn the control ***1*** to one of the eight positions to set the temperature. The further towards the red the slide is, the higher the temperature will be.

When the air conditioning system is used for long periods, it may begin to feel cold. To increase the temperature, turn control ***1*** to the right.

Adjusting the distribution of air in the passenger compartment

Turn control ***5*** to choose the distribution option.

All the air is then directed to the windscreen and front side window demisting vents.

The air flow is distributed between front side window demisting vents, the windscreen demisting vents and the footwells.

The air flow is directed towards the dashboard vents and towards the footwells.

The air flow is mainly directed to the dashboard air vents.

The air flow is directed mainly towards the footwells.

Rear screen de-icing/ demisting

Press the ***7*** button: the integrated indicator light comes on. This function enables rapid demisting/de-icing of the rear screen and the rear view mirrors (on equipped vehicles).

To exit this function, press button ***7*** again. Demisting automatically stops.

Recommendations
In the event of freezing, manually de-ice the windscreen using a scraper rather than the de-icing/demisting function in order to reduce your energy consumption.

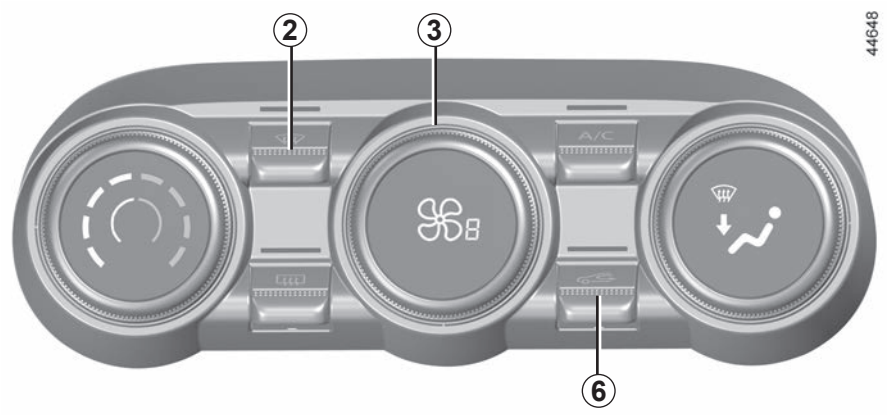

Clear View function

Press the ***2*** button: the integrated indicator light comes on.

This system quickly demists and de-ices the windscreen and the front side windows. It requires the automatic usage of the air-conditioning or the heating.

To exit this function, select the adjustment required (distribution, ventilation speed, temperature, air recirculation).

Switching the air recirculation on

Press button ***6***: the integrated indicator light comes on. In these conditions, air is taken from the passenger compartment and is recycled, with no air being taken from outside the vehicle.

The demisting/de-icing will still take priority over the air recirculation.

Air recirculation is for:

– isolating the vehicle from the external atmosphere (driving in polluted areas, etc.);

– lowering the passenger compartment temperature as quickly as possible.

Stopping the system

Press button ***3***.

Prolonged use of air recirculation can lead to condensation forming on the side windows and windscreen, and discomfort due to the use of non-renewed air in the passenger compartment. We therefore advise you to return to normal mode (external air) as soon as the air recirculation function is no longer required, by pressing the button ***6*** again.

AUTOMATIC CLIMATE CONTROL (1/4)

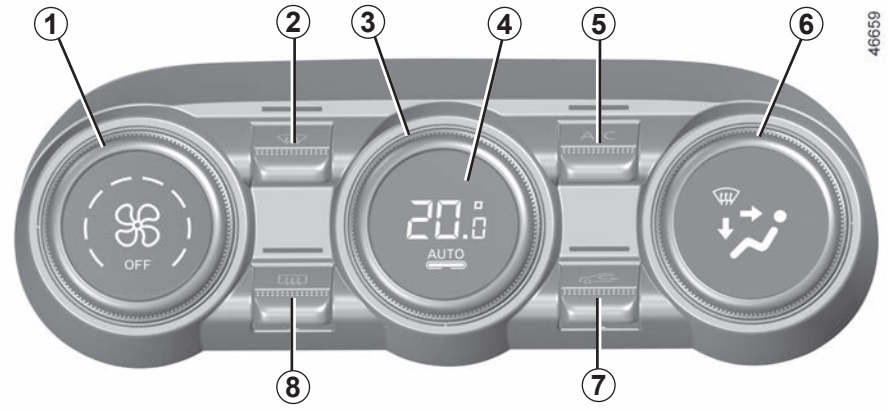

The controls

(depending on the vehicle)

1 Adjusting the ventilation speed and OFF position.

2 “Clear View” function.

3 Adjusting the air temperature.

4 Automatic mode.

5 Air conditioning control.

6 Distribution of air in the passenger compartment.

7 Air recirculation.

8 De-icing/demisting of the rear screen and, depending on the vehicle, the rear view mirrors.

Automatic mode

The automatic climate control system guarantees comfort in the passenger compartment and good visibility (except in the event of extreme conditions), while optimising fuel consumption. The system controls the ventilation speed, air distribution, air recirculation, and starting and stopping the air conditioning and air temperature.

AUTO**:** allows the selected comfort level to be best attained, depending on the exterior conditions. Press button ***4***.

Adjusting the ventilation speed.

In automatic mode, the system uses the most suitable amount of air to reach and maintain the desired comfort level.

You can still adjust the ventilation speed by turning control ***1*** to increase or reduce the ventilation speed.

Adjusting the air temperature

Turn control ***3*** to obtain the desired temperature.

Turning the control to the right increases the temperature.

Note: to increase the vehicle range, reduce the comfort level by turning the ***3*** control

Any action on a button other than the AUTO button triggers deactivation of automatic mode.

Clear View function

Press the ***2*** button: the integrated indicator light comes on.

This function quickly de-mists the windscreen, rear screen, front side windows and door mirrors (depending on the vehicle). The air conditioning and rear screen de-icing functions must be activated.

Press button ***8*** to stop the heated rear screen operating, and the integrated indicator goes out.

To exit this function, press button ***2*** or ***4***.

Some buttons have an operating tell-tale which indicates the operating status.

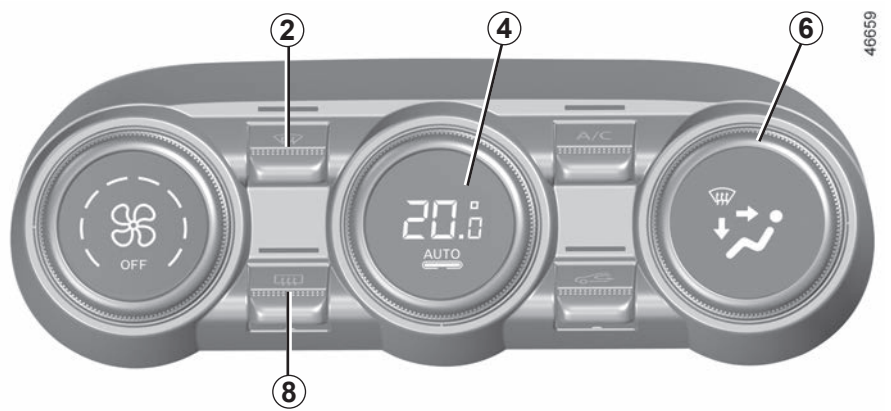

Adjusting the distribution of air in the passenger compartment

Turn control ***6***. The integrated warning light in the button comes on.

All the air is then directed to the windscreen and front side window demisting vents.

The air flow is distributed between front side window demisting vents, the windscreen demisting vents and the footwells.

The air flow is directed towards the dashboard vents and towards the footwells.

The air flow is mainly directed to the dashboard air vents.

The air flow is directed mainly towards the footwells.

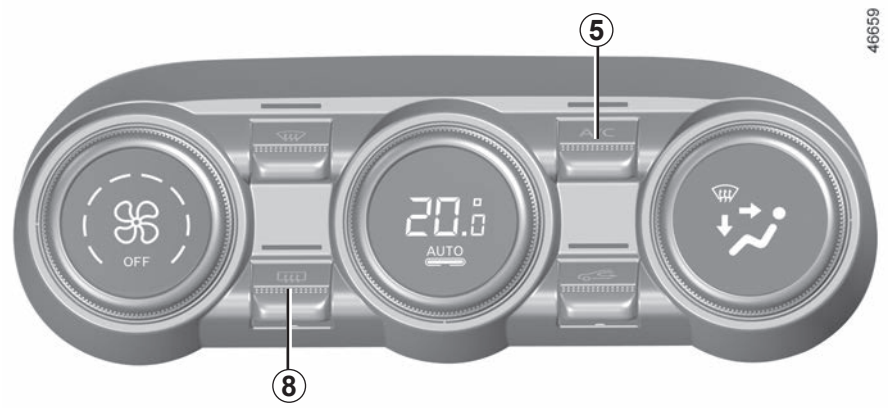

Rear screen de-icing/ demisting

Press the ***8*** button: the integrated indicator light comes on. This function enables rapid demisting or de-icing of the rear screen and de-icing of the rear view mirrors (on equipped vehicles).

To exit this function, press button ***8*** again. Demisting automatically stops.

Switching air conditioning on or off

In automatic mode, the system switches the air conditioning system on or off, depending on the climate conditions.

Press the button ***5*** to force the air conditioning to stop. The integrated warning light will go out.

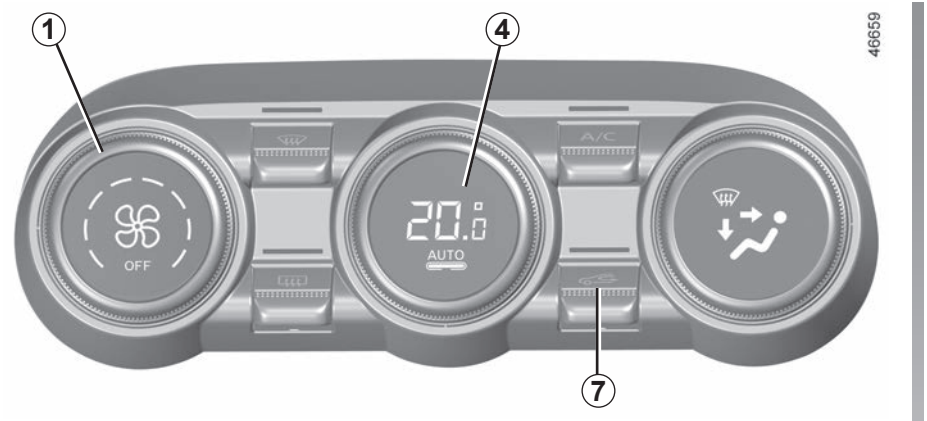

Air recirculation (isolation of the passenger compartment)

This function is managed automatically (operation is confirmed by a warning light on button ***7***), but you can also activate it manually.

The demisting/de-icing will still take priority over the air recirculation.

Manual use

Press the ***7*** button: the integrated indicator light comes on.

Prolonged use of this position may lead to odours, caused by non-renewal of air, and the formation of condensation on the windows.

We therefore advise you to return to automatic mode as soon as air recirculation is no longer needed, by pressing button ***7***.

Stopping the system

Turn the control ***1*** to “OFF” to stop the system. To start it, turn the control ***1*** again, then adjust the fan speed or press the button ***4***.

AIR CONDITIONING: programming (1/2)

With the engine running and the vehicle stationary, use the multimedia screen ***1*** to select the “Settings” menu and the “Vehicle” tab, then select the “EV programming” menu ***2*** and the “Climate” tab ***4***.

Programming the departure time

Press “Edit” ***3*** to access the comfort settings.

You may store multiple comfort programs.

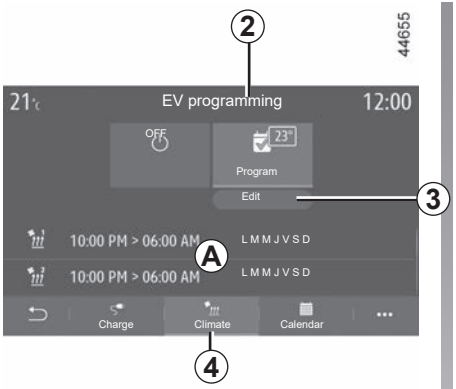

On vehicles fitted with an automatic air conditioning system, you can adjust the temperature ***5*** from this menu and activate/deactivate saved programmes.
Select the time and date ***6*** for the schedule that you wish to change to access the settings.

Programmed times are displayed in area ***A***.

Note: you can program the air conditioning using a smartphone application. Please refer to the multimedia instructions for further information.

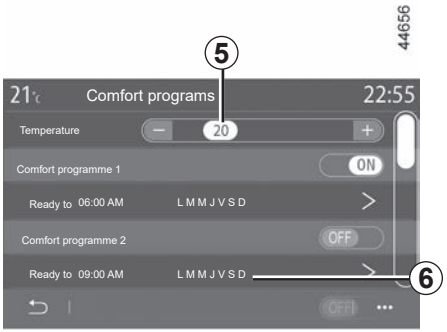

Driver’s responsibility when parking or stopping the vehicle

Never leave an animal, child or adult who is not self-sufficient alone on your vehicle, even for a short time.

In hot and/or sunny weather, please remember that the temperature inside the passenger compartment increases very quickly.

RISK OF DEATH OR SERIOUS INJURY.

Note:
- You can deactivate the comfort programs by pressing “OFF”;
- the minimum time period between each programme is two hours;
- depending on the vehicle, the selected temperature is displayed on the ***2*** menu.

“Programme” activation

The function launches before the time scheduled by the customer, so that the vehicle reaches a comfortable temperature by the time they arrive, if:
- the vehicle is connected to the electrical supply;
- the bonnet is closed;
- the traction battery charge level is over 20%;
- the doors are closed and locked;
- the engine is stopped.

Warning light comes on the instrument panel.

Note: if your vehicle is not connected, your programme is reduced to 10 minutes in order to maintain vehicle range.

Immediate activation of the air-conditioning

It is possible to carry out immediate starting of the air conditioning, if:
- the bonnet is closed;
- the traction battery charge level is over 20%;
- the doors are closed and locked;
- the engine is stopped.

With the engine running and the vehicle stationary, use the multimedia screen ***1*** to select the “Settings” menu, “Vehicle” tab, then the “EV programming” menu and the “Climate” tab ***4***. Please refer to the multimedia instructions for further information.

Stopping the programmed air conditioning

The air conditioning stops automatically around ten minutes after the set end time.

However, the function can be deactivated if:
- the engine is running;
- the charging socket is disconnected;
- the traction battery charging level is lower than 20%;
- the bonnet is open.

Note: any modification carried out within 2 hours before a programmed start must be cancelled and re-programmed in order to be registered.

Driver’s responsibility when parking or stopping the vehicle

Never leave an animal, child or adult who is not self-sufficient alone on your vehicle, even for a short time.

In hot and/or sunny weather, please remember that the temperature inside the passenger compartment increases very quickly.

RISK OF DEATH OR SERIOUS INJURY.

Advice on use

In some situations, (air conditioning off, air recirculation activated, ventilation speed at zero or low, etc.) you may notice that condensation starts to form on the windows and windscreen.

If there is condensation, use the **"Clear View"** function to remove it, then use the air conditioning in automatic mode to stop it forming again.

Maintenance

Refer to the Maintenance Document for your vehicle for the inspection frequency.

Range

It is normal to notice an increase in energy usage when the air conditioning is operating.

Use the air conditioning system regularly, even in cold weather, running it at least once a month for approximately 5 minutes.

Recommendations to limit energy consumption and maintain the vehicle range

Drive with the air vents open and the windows closed. If the vehicle has been parked in the sun, open the doors for a few moments to let the hot air escape before starting the engine.

It is preferable, before setting off, to use of the programmed air conditioning ➥ 3.11.

Operating faults

As a general rule, contact your approved dealer in the event of an operating fault.

– **Reduction in de-icing, demisting or air conditioning performance.** This may be caused by the passenger compartment filter cartridge becoming clogged.

– **No hot or cold air is being produced.** Check that the controls are set correctly and that the fuses are sound. Otherwise, switch off the system.

Presence of water under the vehicle

After prolonged use of the air conditioning system, it is normal for water to be present under the vehicle. This is caused by condensation.

Do not open the refrigerant fluid circuit. The fluid may damage eyes or skin.

59952

Refrigerant fluid

The refrigerant circuit (of which some components are hermetically sealed), which may contain fluorinated greenhouse gases.

Depending on the vehicle, you will find the following information on label ***A*** affixed inside the engine compartment.

The presence and location of the information on the label depends on the vehicle.

Type of refrigerant fluid

(XXX) Type of oil in the air conditioning circuit

Inflammable product

Consult the driver's handbook

Maintenance

x.xxx kg	(**1**) Quantity of refrigerant fluid present in the vehicle.
GWP xxxx	(**2**) Global warming potential.
CO2 eq x.xx t	(**3**) Quantity in weight and in CO2 equivalent.

Additional information

Depending on label and depending on the type of refrigerant:

Refrigerant fluid R-1234yf

– (**1**) 1,035 kg;
– (**2**) GWP 4;
– (**3**) 0.004 t.

Do not open the refrigerant circuit. The fluid may damage eyes or skin.

Before carrying out any action in the engine compartment, you must switch off the ignition ➥ 2.2.

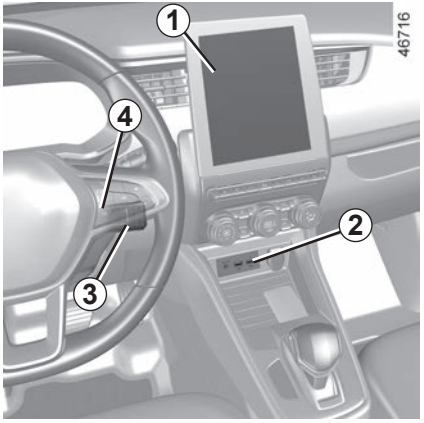

The presence and location of this equipment depends on the vehicle version.

1 Multimedia touchscreen display;
2 Multimedia sockets;
3 Steering column control;
4 Voice commands;
5 Induction charging area;
6 Microphone.

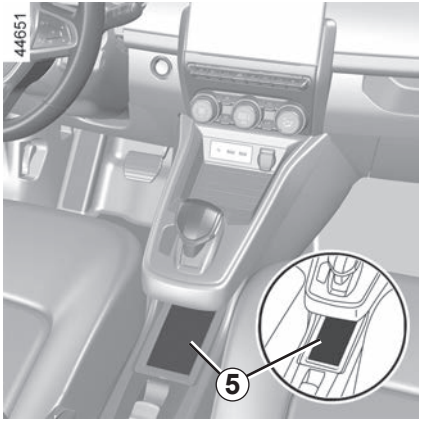

Induction charging area *5*

➥ 3.19

Using the telephone

We remind you of the need to conform to the legislation in force concerning the use of such equipment.

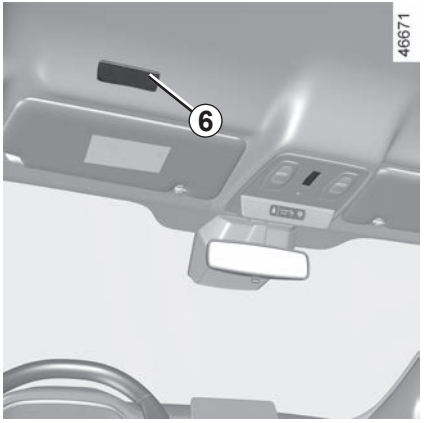

Refer to the equipment instructions for information on how to operate this equipment.

Electric windows

Press or pull the switch to raise or lower a window to the desired height (the rear windows do not open fully);

These systems operate with the ignition on or off, until one of the front doors is opened (limited to about 3 minutes).

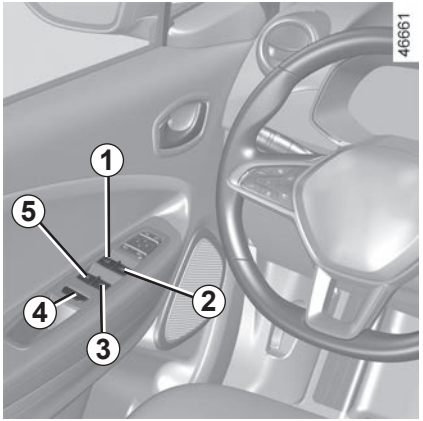

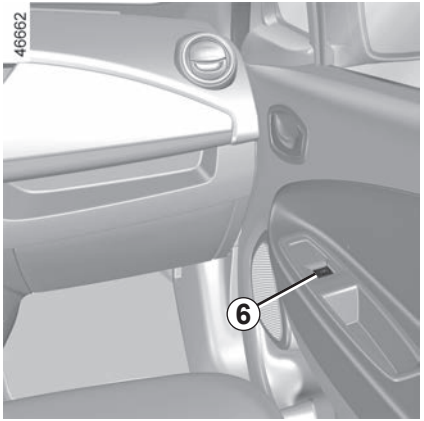

From the driver's seat, use switch:

- ***1*** for the driver's side;
- ***2*** for the front passenger side;
- ***3*** and ***5*** for the rear passenger windows.

From the passenger seats, use switch ***6***.

Note: if the window detects resistance when closing (e.g.: branch of a tree, etc.) it stops and then lowers again by a few centimetres.

Safety of rear occupants

The driver can prevent operation of the rear electric windows by pressing switch ***4***. A confirmation message is displayed on the instrument panel.

Driver's responsibility

Never leave your vehicle with the card inside, when there is a child, dependent adult or a pet on-board, even for a short while. They may pose a risk to themselves or to others by starting the engine or activating equipment (such as the gear lever or electric windows). If any part of the body becomes trapped, reverse the direction of the window immediately by pressing the relevant switch.

Risk of serious injury.

Avoid resting any objects against a half-open window: there is a risk that the electric window could be damaged.

One-touch mode
(depending on vehicle)
This mode works in addition to the operation of the electric windows described previously. It can be fitted to the driver's window.
Briefly press or pull the window switch fully: the window is fully lowered or raised. Pressing the switch again stops the window moving.

Impossible to operate the one-touch electric window
The one-touch electric window is equipped with heat protection: if you press the switch for the window more than sixteen consecutive times it goes into protection mode (locking the window).
You can:
– use the electric window switch briefly and with intervals of approximately 30 seconds;
– with the engine running, the window will be unlocked after approximately 20 minutes of inaction on the electric window switch.

Note: if the window detects resistance when closing (e.g.: branch of a tree, etc.) it stops and then lowers again by a few centimetres.

Operating faults

If a fault occurs when closing a window, the system switches to normal mode: lift the switch concerned as many times as necessary until the window is fully closed, release it. Press the switch again (still on the closing side) for approximately one second to reset the system.

If necessary, contact an approved Dealer.

When closing the windows, ensure that no part of the body (arm, hand, etc.) is protruding from the vehicle.

Risk of serious injury.

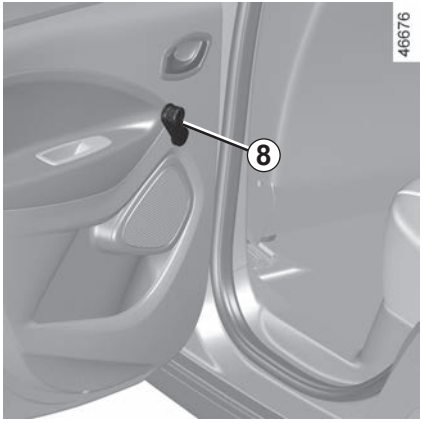

Manual window winder controls

Turn handle ***8***.

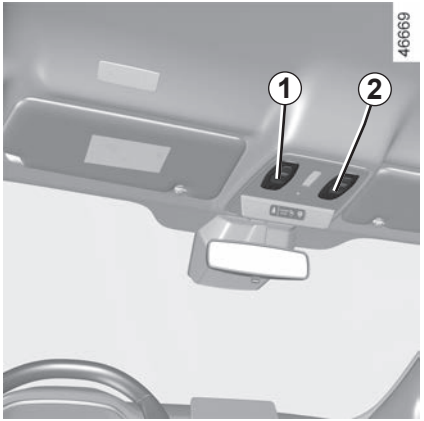

Map reading light
(depending on the vehicle)

Press switch ***1*** of ***2*** for:

– permanent lighting;

– lighting switches off immediately.

Note: on vehicles fitted with a multimedia screen, you can use the multimedia screen to deactivate/activate the reading lights which switch on when the doors or luggage compartment are opened. ➥ 1.94.

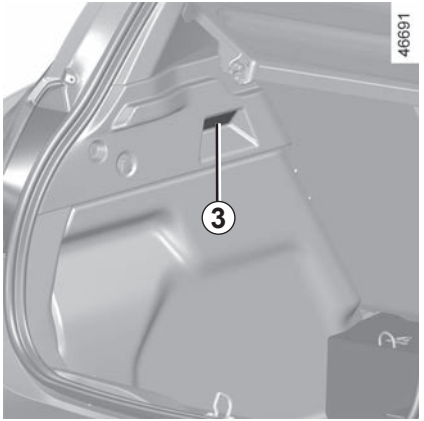

Luggage compartment light

Light ***3*** comes on when the luggage compartment is opened.

Unlocking and opening the doors or tailgate switches on the timed courtesy lights and lights.

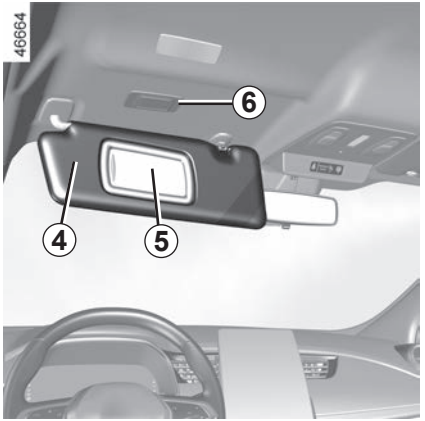

Sun visor

Lower the sun visor ***4*** over the windscreen or unclip it and turn it over the side window.

Courtesy mirrors

Slide cover ***5***.

The light ***6*** switches on automatically.

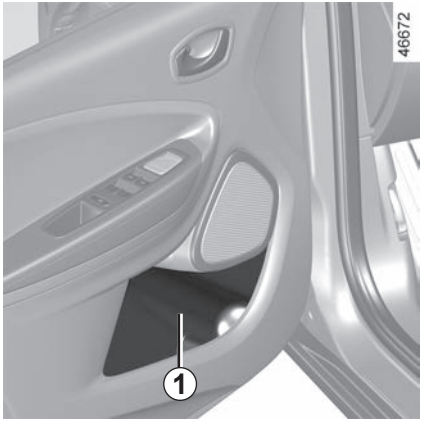

Front door storage compartments *1*

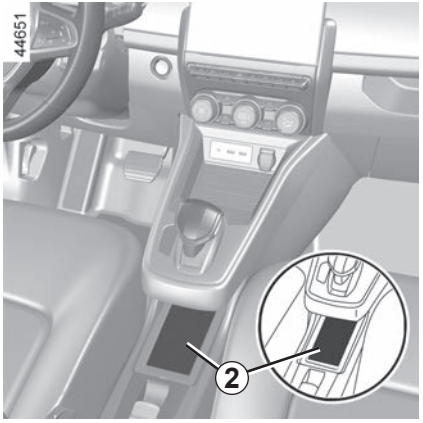

Induction charging area *2*

This is used to charge your phone without the need for a cable. Please refer to the multimedia instructions for further information.

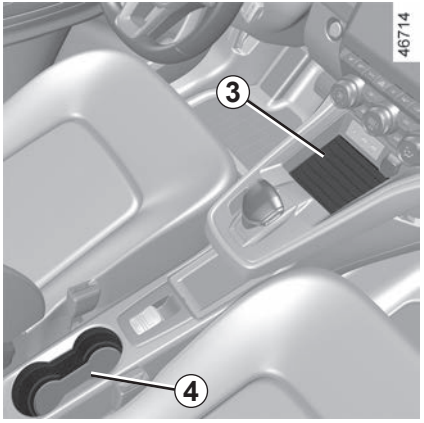

Central storage compartment *3*

Cup holder *4*

No object should be placed on the floor (in front of the driver). Such objects may slide under the pedals during sudden braking manoeuvres and obstruct their use.

When turning corners, accelerating or braking, ensure that the receptacle being held by the cup holder is not dislodged.

There is a risk of burning if hot liquid escapes.

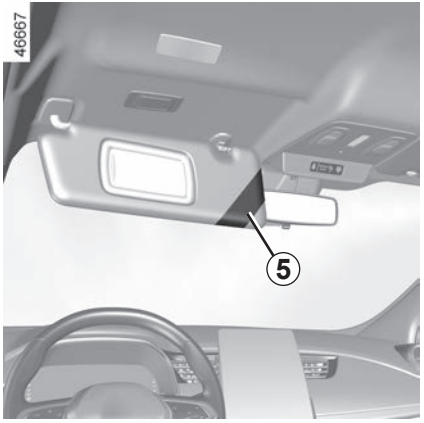

Sun blind storage compartment *5*

Can be used to hold motorway toll tickets, maps, etc.

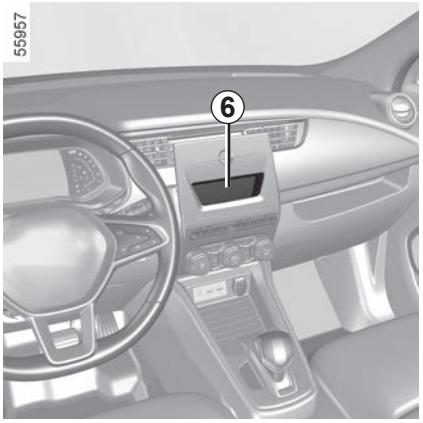

Central storage compartment *6*

(depending on the vehicle)

Can be used to hold motorway toll tickets, maps, etc.

Ensure that no hard, heavy or pointed objects are placed in the “open” storage compartments in such a way that they may fall onto passengers during sudden turning, braking or in the event of an accident.

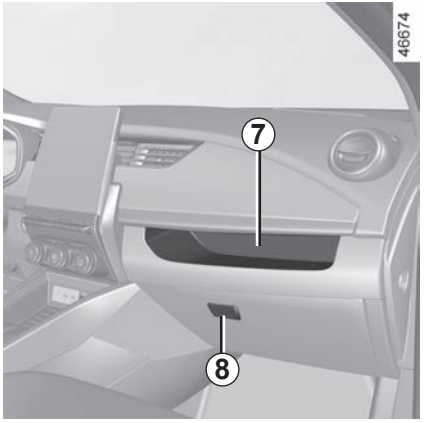

Dashboard storage *7*

Glove box

Pull handle ***8*** to open it.

It can hold A4 size documents, a large bottle of water, etc.

Grab handle *9*

This offers support and can be held when the vehicle is being driven.

Do not use it for getting into or out of the vehicle.

Rear door storage compartment *10*

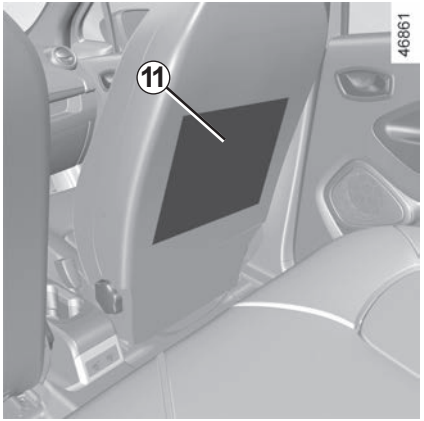

Storage pocket *11* with side opening

Ensure that no hard, heavy or pointed objects are placed in the “open” storage compartments in such a way that they may fall onto passengers during sudden turning, braking or in the event of an accident.

ACCESSORIES SOCKET

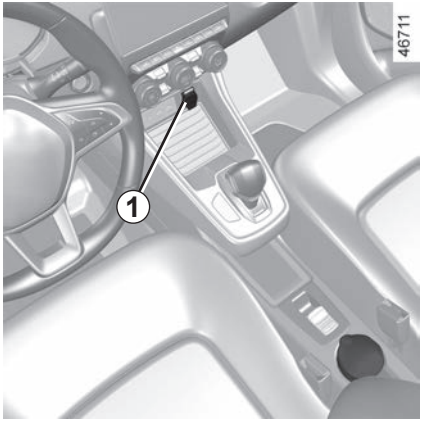

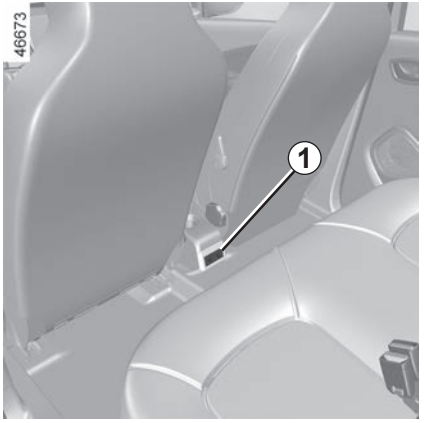

Accessories sockets *1*

They are provided for connecting accessories approved by our Technical Department.

Connect accessories with a maximum power of 120 watts (12 V) only.

When several accessory sockets are used at the same time, the total power of the connected accessories must not exceed 180 watts.

Fire hazard.

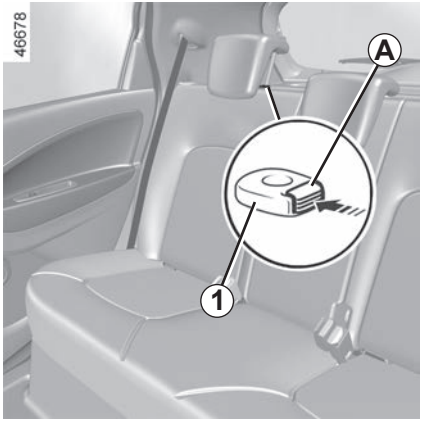

Position for use

Raise or lower the headrest while pulling it towards the front of the vehicle. Check that the bonnet is correctly locked.

To remove the headrest

Press the button ***A*** on the switch ***1*** and remove the headrest.

To refit the headrest

Insert the headrest rods into the holes, and lower the headrest to the first notch. Check that it is correctly locked.

Storage position

Press the button ***A*** and lower the headrest completely.

When the headrest is set at the lowest position (position *B*), this is for storage only: it should not be in this position when a seat is occupied.

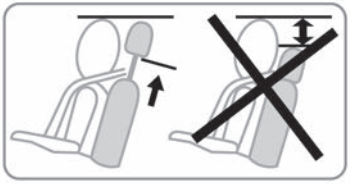

The headrest is a safety component; check that it is fitted and in the correct position.

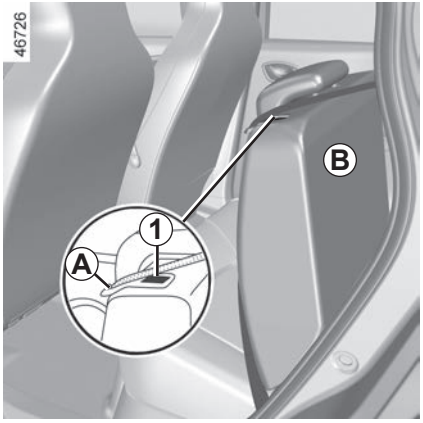

The seatback may be folded down to allow bulky objects to be transported.

To fold down the seatback

Ensure that the front seats are far enough forward.

Lower the headrests fully.

Place the seat belts in their guides ***A***.

Press button ***1*** and lower the seatback ***B***.

Before moving the seatback, put the seat belt in belt guide ***A*** to avoid damaging it.

When moving the rear seats, ensure that nothing obstructs the anchorage points (passenger's arm or leg, a pet, gravel, cloth, toys, etc.).

For safety reasons, carry out any adjustments when the vehicle is not being driven.

The configuration of the two-seat bench with the small seatback ***B*** pulled down, does not allow the central seat to be used as it would be impossible to buckle the seat belt (belt buckles inaccessible).

To replace the seatback, proceed in the reverse order to removal.

Refit the seatback and click it back into place.

When refitting the seatback, make sure it is correctly locked in place.

If seat covers are fitted, make sure these do not prevent the seatback latch from locking in.

Make sure that the seat belts are positioned correctly.

Reposition the headrests.

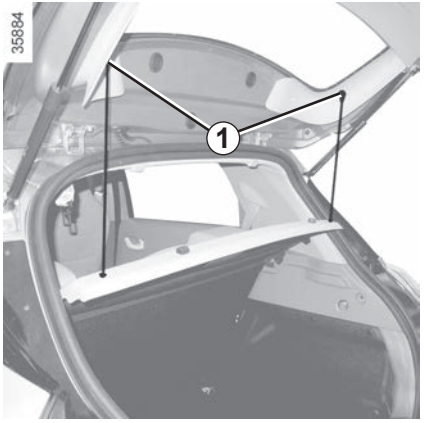

Rear parcel shelf

To remove:

– lower the rear headrests;

– unhook both straps ***1***;

– lift the shelf ***2*** upwards to unclip;

Maximum weight on rear parcel shelf: 2 kg, evenly distributed.

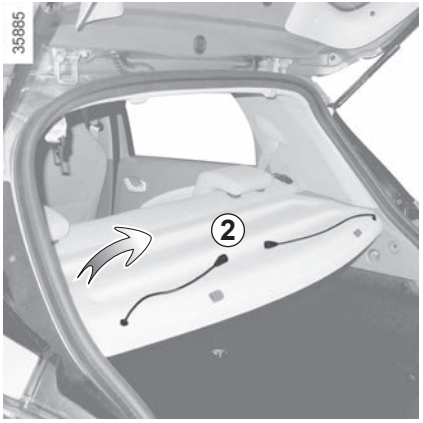

– push the shelf ***2*** inwards and turn it;

– pull the shelf towards you.

To refit, proceed in the reverse order to removal.

Do not place any objects, especially heavy or hard objects, on the parcel shelf.

These may pose a risk to the vehicle occupants if the driver has to brake suddenly or if the vehicle is involved in an accident.

LUGGAGE COMPARTMENT COVER: utility versions

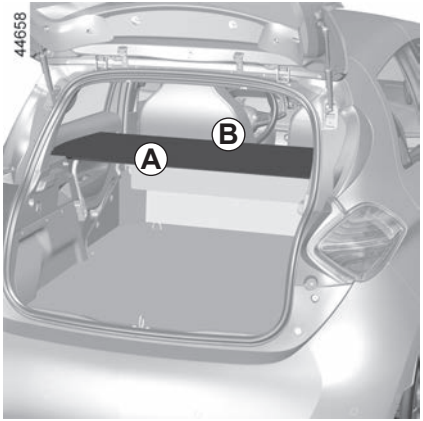

The luggage compartment cover consists of a rigid section ***A*** and a folding section ***B***.

The luggage cover is in the unfolded position.

Do not place any objects, especially heavy or solid objects on the luggage compartment cover. These may pose a risk to the vehicle occupants if the driver has to brake suddenly or if the vehicle is involved in an accident.

The luggage compartment cover is in the folded position.

To fold it:

– lift shelf ***A*** slightly and pull it towards you to remove it;

– then fold section ***B*** back on itself.

The luggage compartment cover is removed.

To remove it: with the cover in the folded position and holding it **horizontally**:

– pull one side of the luggage compartment cover towards you, tilting it slightly;

– then pull the other side of the luggage compartment cover to completely detach it from its housing.

LUGGAGE COMPARTMENT, SPOILER

Opening

Press button ***1*** and lift the tailgate.

Closing

Lower the luggage compartment lid, depending on the vehicle, initially using the inside handle to assist you.

Spoiler

It is **forbidden** to attach objects and/or accessories (bike rack, etc.) to spoiler ***A***.

TRANSPORTING OBJECTS IN THE LUGGAGE COMPARTMENT

Always position the objects transported so that the largest surface is against:

– The rear bench seatback for normal loads (example ***A***).

– The front seatbacks with the rear seatbacks folded down, as is the case for maximum loads (example ***B***).

Ensure that the objects being transported are evenly distributed throughout the loading area.

If you have to place objects on the folded seatback, it is necessary that you lower the headrests before folding the seatback so that it can be folded as flat as possible against the seat.

Always position the heaviest items directly on the floor. Use the lashing points ***1*** on the boot floor, if these are fitted to the vehicle. The luggage should be loaded in such a way that no items will be thrown forward and strike the occupants if the driver has to brake suddenly. Fasten the rear seat belts, even if the seats are not occupied.

Section 4: maintenance

Bonnet 4.2
Levels 4.4
Secondary 12 V battery 4.7
Tyre Pressure 4.9
Bodywork maintenance 4.10
Interior trim maintenance 4.13

To open, pull handle ***1***, located on the left-hand side of the dashboard.

When working in the engine compartment, ensure that the windscreen wiper stalk is in the park position.

Risk of injury.

Do not do any work under the bonnet when the vehicle is charging or when the ignition is switched on.

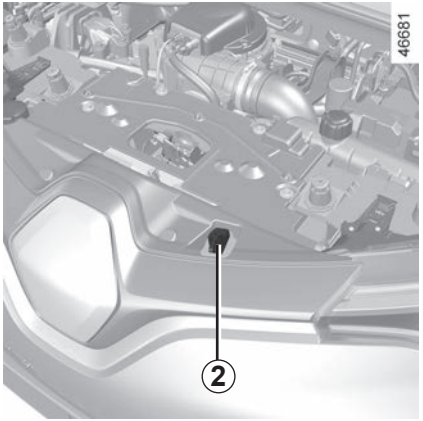

Unlocking the bonnet catch

Lift the bonnet by several centimetres and push lever ***2*** to the left.

In the event of even a slight impact involving the radiator grille or bonnet, have the bonnet lock checked by an authorised dealer as soon as possible.

The vehicle drive system in an electric vehicle uses a direct voltage of approximately 400 volts.

This system can get hot during and after switching off the ignition. Observe the warning messages on the labels in the vehicle.

Any intervention or modification on the vehicle's 400 V electrical system (components, cables, connectors, traction battery) is strictly prohibited.

The risk of serious burns or electric shocks can lead to death.

The engine cooling fan may also start at any moment. The label in the engine compartment reminds you of this.

Risk of injury.

Opening the bonnet

Lift the bonnet; you will need to guide it as it is held by a strut.

Do not press down on the bonnet: there is a risk that the bonnet will close inadvertently.

After carrying out any work in the engine compartment, check that nothing has been left behind (cloth, tools, etc.).
Otherwise, this may lead to engine damage.

Closing the bonnet

Check that nothing has been left in the engine compartment.

To close the bonnet again, hold the bonnet in the middle and lower it to 30 cm above the closed position, then release it. It will latch automatically under its own weight.

Ensure that the bonnet is properly locked.
Ensure that nothing is preventing locking (grit, cloths, etc.).

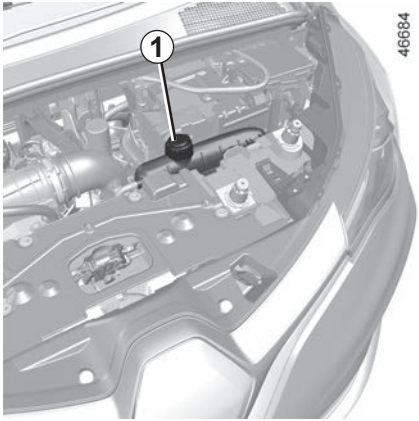

Coolant

The level is checked with the engine switched off and on flat ground. The level **when cold** must be between the "**MINI**" and "**MAXI**" marks on the coolant reservoir ***1***.
Top this level up **when cold** before the "**MINI**" mark is reached.

Do not do any work under the bonnet when the vehicle is charging or when the ignition is switched on.

Checking intervals

Check the coolant level regularly (very severe damage is likely to be caused to the engine if it runs out of coolant).

If the level needs to be topped up, only use products approved by our Technical Department which ensure:

– protection against freezing;

– anticorrosion protection of the cooling system.

Note: for a new vehicle in the running-in phase: the coolant level may be higher than the "**MAXI**" mark on the tank, then drop to between the "**MINI**" and "**MAXI**" marks. This does not present a risk.

If there is an abnormal or repeated drop in the fluid level, please consult an authorised dealer.

No operations should be carried out on the cooling circuit when the engine is hot.

Risk of burns.

Replacement intervals

Refer to the Maintenance Document for your vehicle.

The vehicle drive system in an electric vehicle uses a direct voltage of approximately 400 volts.

This system can get hot during and after switching off the ignition. Observe the warning messages on the labels in the vehicle.

Any intervention or modification on the vehicle's 400 V electrical system (components, cables, connectors, traction battery) is strictly prohibited.

The risk of serious burns or electric shocks can lead to death.

The engine cooling fan may also start at any moment. The label in the engine compartment reminds you of this.

Risk of injury.

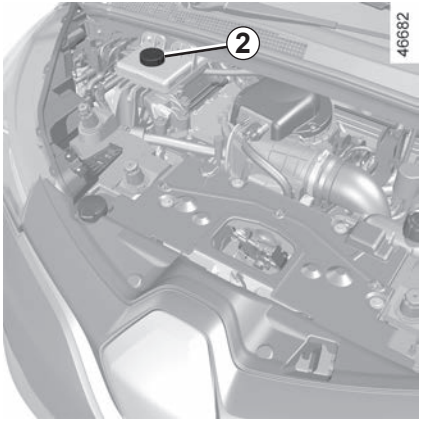

Brake fluid

The level should be read with the engine switched off and on level ground. This should be checked frequently, and immediately if you notice even the slightest loss in braking efficiency.

Replacement intervals

Refer to the Maintenance Document for your vehicle.

Topping up

After any operation on the hydraulic circuit, a specialist must replace the fluid. Only use fluids approved by our Technical Department (and taken from a sealed container).

Level *2*

It is normal for the level to drop as the brake linings wear, but it must never drop lower than the **"MINI"** warning line.
If you wish to check the disc wear yourself, you should obtain the document explaining the checking procedure from our network or from the manufacturer's website.

If there is an abnormal or repeated drop in the fluid level, please consult an authorised dealer.

When working in the engine compartment, ensure that the windscreen wiper stalk is in the park position.

Risk of injury.

When working in the engine compartment, certain parts may be hot. In addition, the engine cooling fan can come on at any moment.

Risk of burns or serious injury.

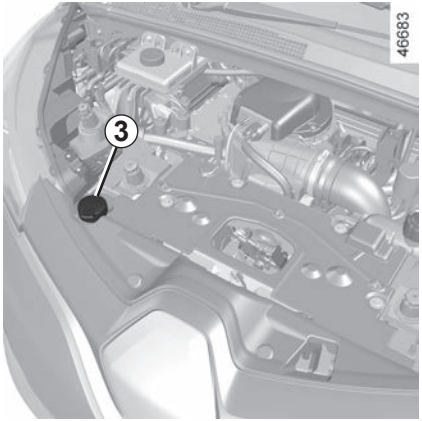

Windscreen washer reservoir

Topping up

Open cap ***3***, fill until you can see the fluid, then refit the cap.

Liquid

Only use windscreen washer fluid containing antifreeze.
We advise you to consult an approved dealer or a qualified professional.

Note: do not use hard water (risk of damage to the priming pump, limescale building up on the pump and the jets).

Jets

Use a tool such as a needle to adjust the height of the windscreen washer jets.

If there is an abnormal or repeated drop in the fluid level, please consult an authorised dealer.

SECONDARY 12 V BATTERY (1/2)

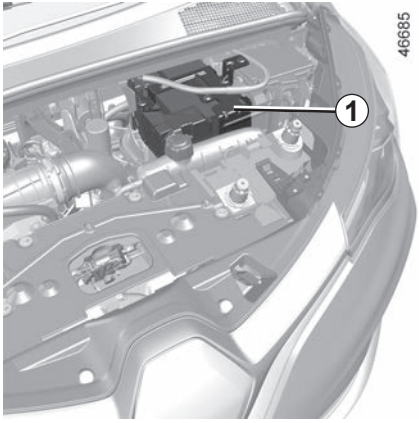

The secondary battery is a 12 V battery: this supplies the energy required to operate vehicle equipment (lights, windscreen wipers, audio system, etc) and certain safety systems, such as ABS.

You should not open it or add any fluid.

Do not do any work under the bonnet when the vehicle is charging or when the ignition is switched on.

Maintenance/replacement

The charge status of the 12 volt battery ***1*** can decrease, especially if you use your vehicle:

– when the outside temperature drops;
– after extended use of energy-consuming devices with the engine switched off.

For your safety and the proper operation of the vehicle's electrical equipment (lights, windscreen wipers, braking assistance etc.), any work on the secondary 12 V battery (removal, disconnection etc.) **must** be carried out by a specialist professional.
Risk of serious burns or electric shocks.
Respect **categorically** the replacement intervals (without exceeding them) as stated in the maintenance document.
The battery is a specific type. Please ensure it is replaced with the same type.
Contact an Authorised Dealer.

The vehicle drive system in an electric vehicle uses a direct voltage of approximately 400 volts.

This system can get hot during and after switching off the ignition. Observe the warning messages on the labels in the vehicle.

Any intervention or modification on the vehicle's 400 V electrical system (components, cables, connectors, traction battery) is strictly prohibited.

The risk of serious burns or electric shocks can lead to death.

The engine cooling fan may also start at any moment.

The label in the engine compartment reminds you of this.

Risk of injury.

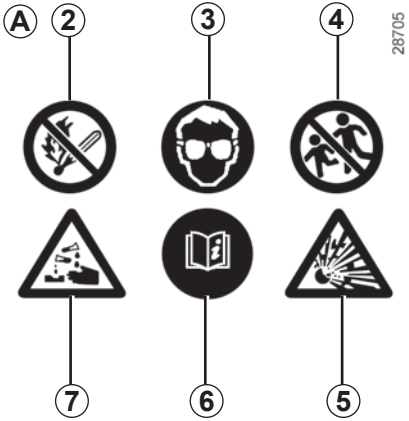

Label *A*

Observe the indications on the battery.

2 naked flames and smoking are forbidden;
3 eye protection required;
4 keep away from children;
5 explosive materials;
6 please consult the vehicle user manual;
7 corrosive substances.

Breakdown recovery

To avoid damaging your vehicle, do not recharge the secondary 12 V battery using:

– an external battery charger;

– a battery from another vehicle.

Please contact an Authorised Dealer.

Do not disconnect the secondary 12 V battery.

Risk of serious burns or electric shocks.

Do not use your electric vehicle to restart the 12 volt battery in another vehicle. The 12 volt electric power of an electric vehicle is not enough to perform such an operation.
Risk of damage to vehicle

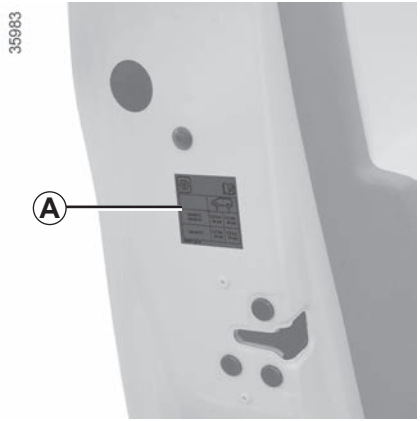

Label *A*

Open the driver's door to read it.

Tyre pressures should be checked when the tyres are cold.

If the tyre pressures cannot be checked when the tyres are **cold**, increase the pressures from **0.2** to **0.3** bar (or **3 PSI**). **Never deflate a hot tyre.**

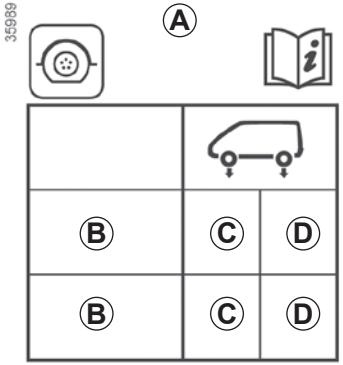

B : dimension of the tyres fitted to the vehicle.

C : tyre pressures for the front wheels.

D : tyre pressures for the rear wheels.

Tyre safety and chain fitting: for information on servicing conditions and, depending on the vehicle version, the use of chains. ➥ 5.6.

Vehicle fitted with a tyre pressure monitoring system

In the event of under-inflation (punctures, under-inflation, etc.), the warning light appears on the instrument panel. ➥ 2.18.

For your safety, please respect the speed limit.

When they need to be replaced, only tyres of the same make, size, type and profile should be used on a single axle.

They must: either have a load capacity and speed rating at least equal to those of the original tyres, or conform to those recommended by an authorised dealer.

Failure to heed these instructions could endanger your safety and affect your vehicle's roadworthiness.

Risk of loss of control of the vehicle.

A well-maintained vehicle will last longer. It is therefore recommended to maintain the exterior of the vehicle regularly.

Your vehicle has been treated with very effective anti-corrosion products. It is nevertheless subject to various outside influences.

Corrosive agents in the atmosphere
- atmospheric pollution (built-up and industrial areas);
- saline atmospheres (near the sea, particularly in hot weather);
- seasonal and damp weather conditions (e.g. road salt in winter, water from road cleaners, etc.).

Minor impacts

Abrasive action
Dust and sand in the air, mud, road grit thrown up by other vehicles, etc.

You should take a number of minor precautions in order to safeguard your vehicle against such risks.

You should

Wash your car frequently, **with the engine off**, with cleaning products recommended by our Technical Department (never use abrasive products). Rinse thoroughly beforehand with a jet:
- spots of tree resin and industrial grime;
- mud in the wheel arches and underneath the body which forms damp patches;
- **bird droppings**, which cause a chemical reaction with the paint that **rapidly discolours paintwork and may even cause the paint to peel off;**
  wash the vehicle **immediately** to remove these marks since it is impossible to remove them by polishing;
- salt, particularly in the wheel arches and underneath the body after driving in areas where the roads have been gritted.

Withdraw the vegetable falls (resin, film etc.) from the vehicle regularly.

Observe the vehicle stopping distances when driving on gravelled surfaces to prevent paint damage.

Repair, or have repaired quickly, areas where the paint has been damaged, to prevent corrosion spreading.

Remember to visit the body shop periodically in order to maintain your anti-corrosion warranty. Refer to the Maintenance Document.

Respect local regulations about washing vehicles (e.g. do not wash your vehicle on a public highway).

If it is necessary to clean mechanical components, hinges, etc., spray them with products approved by our Technical Department to protect them after they have been cleaned.

We have selected special products to care for your vehicle and you can obtain these from the manufacturer's accessory outlets.

What you should not do

Wash the vehicle in bright sunlight or freezing temperatures.

Do not scrape off mud or dirt without pre-wetting.

Allow dirt to accumulate on the exterior.

Allow rust to form following minor impacts.

Using solvents not approved by our Technical Department to remove stains may damage the paintwork.

Do not drive in snow or muddy conditions without washing the vehicle, particularly under the wheel arches and body.

Degrease or clean using high-pressure cleaning equipment or by spraying products not approved by our Technical Department:

- mechanical components (e.g.: engine compartment);
- the wheels (e.g. braking system components such as brake callipers);
- the underbody;
- the parts with hinges (e.g. inside the doors);
- the painted plastic external fittings (e.g. bumpers).

Doing this could give rise to corrosion or operational faults.

Vehicles with a matte paint finish

This type of paint requires certain precautions.

You should do the following

Wash the vehicle by hand using plenty of water, using a soft cloth or a gentle sponge.

Do not do the following

Use wax-based products (polishing).

Rub too hard.

Wash the vehicle in a roller-type car wash.

Attach stickers to the paintwork (risk of leaving marks).

Wash the vehicle using a high-pressure cleaning device.

Using a roller type car wash

Return the wiper stalk to the park position. ➥ 1.109. Check the mounting of external accessories, additional lights and rear view mirrors, and ensure that the wiper blades are secured with adhesive tape.

Remove the radio aerial mast if your vehicle is fitted with this equipment.

Remember to remove the tape and refit the antenna after washing.

Washing the vehicle

Never wash the engine compartment, the charging connection or the traction battery with a high-pressure jet.

This risks damaging the electric circuit.

Never wash the vehicle while it is charging.

Risk of electric shock and a risk to life.

Cleaning the headlights, sensors and cameras

Use a soft cloth or cotton wool. If this does not clean them properly, moisten the cloth with soapy water, then wipe clean using a soft damp cloth or cotton wool.
Finally, dry off carefully with a soft dry cloth.

Do not use cleaning products containing alcohol or utensils (e.g.: a scraper).

Cleaning stickers, decorative films, etc.

You should do the following

Use a soft cloth or cotton wool.

Moisten it slightly with soapy water, then always wipe clean with a soft cloth or cotton wool.

Finally, carefully dry off with a soft dry cloth.

Do not do the following

Use alcohol-based cleaning products.

Use utensils (e.g. scraper).

Rub too hard.

Wash the vehicle using a high-pressure cleaning device.

INTERIOR TRIM MAINTENANCE (1/2)

A well-maintained vehicle will last longer. It is therefore recommended to maintain the interior of the vehicle regularly.

A stain should always be dealt with swiftly.

Whatever type of stain is on the trim, use **cold** (or warm) **soapy water with natural soap**.

Detergents (washing-up liquid, powdered products, alcohol-based products) should not be used.

Use a soft cloth.

Rinse and wipe up excess water.

Multimedia screen

Maintenance of the screen may depend on the type of multimedia equipment. Please refer to the multimedia instructions for further information.

Glass instrument panel

(e.g. instrument panel, clock, exterior temperature display etc.)

Use a soft cloth (or cotton wool).
If this does not clean them properly, use a soft cloth (or cotton wool) slightly moistened with soapy water and then wipe clean using another soft damp cloth or cotton wool.
Finally, dry off **carefully** with a soft dry cloth.

Do not use products containing alcohol and/or spray fluids on the area.

Seat belts

These must be kept clean.
Use products selected by our Technical Department (approved outlets) or warm, soapy water and a sponge then wipe with a dry cloth.
Detergents or dyes must not be used under any circumstances.

Textiles (seats, door trim, etc)

Vacuum-clean the textiles **regularly**.

Liquid stain

Use soapy water.

Dab lightly (never rub) with a soft cloth, rinse and remove the excess.

Solid or pasty stain

Carefully remove the excess solid or pasty material **immediately** using a spatula (working from the edges to the centre to avoid spreading the stain).
Clean as for a liquid stain.

Special instructions for sweets or chewing gum

Place an ice cube on the stain to solidify it then proceed as for a solid stain.

For further recommendations on maintaining the interior and/or in the event of unsatisfactory results, please consult an approved dealer.

Removal/replacing removable equipment originally fitted in the vehicle

If you need to remove equipment in order to clean the passenger compartment (for example, mats), always ensure that they are correctly refitted and are the right way around (the driver's mat should be fitted on the driver's side, etc.) and fit them with the components supplied with the equipment (for example, the driver mat should always be fixed using the pre-fitted mounting components).

With the vehicle stationary, always ensure that nothing will impede driving (anything obstructing the pedals, heel wedged by the mat etc.).

You should not:

Position objects such as deodorants, scents etc. near air vents as this could damage your dashboard trim.

Use high-pressure cleaning equipment or sprays inside the passenger compartment:

without careful use, this equipment could impair the correct functioning of the electrical or electronic components in the vehicle, or have other detrimental effects.

Section 5: practical advice

Tool kit 5.2
Tyre inflation kit 5.3
Tyres (tyre and wheel safety, use in winter) 5.6
Headlights (changing bulbs) 5.10
Rear lights (changing bulbs) 5.11
Interior lighting: changing bulbs. 5.13
“Hands-free” card: battery 5.15
Fuses. 5.17
Fitting a radio. 5.19
Installation and use of accessories: important recommendations. 5.20
Wiper blades 5.21
Towing, breakdown 5.23
Operating faults 5.26

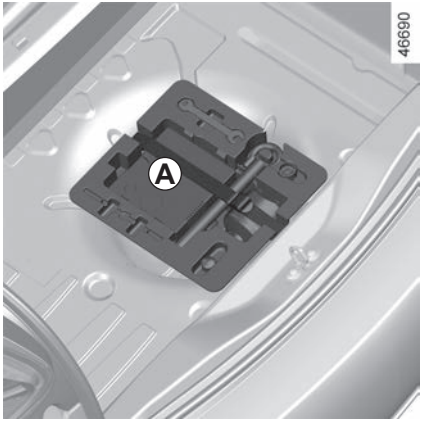

The tools included in the tool kit depend on the vehicle.
Tool kit ***A*** is located in the tray under the luggage compartment carpet.

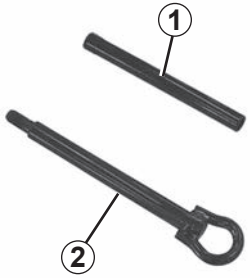

Lever *1*

This locks or unlocks the wheel bolts and tow eye.

Tow eye *2*

➥ 5.23.

Never leave tools unsecured in the vehicle: there is a risk that they may be thrown about during braking. After use, check that all the tools are correctly clipped into the tool kit, then position it correctly in its housing: there is a risk of injury.
If wheel bolts are supplied in the tool kit, only use these bolts for the emergency spare wheel: refer to the label affixed to the emergency spare wheel.

TYRE PRESSURE KIT (1/3)

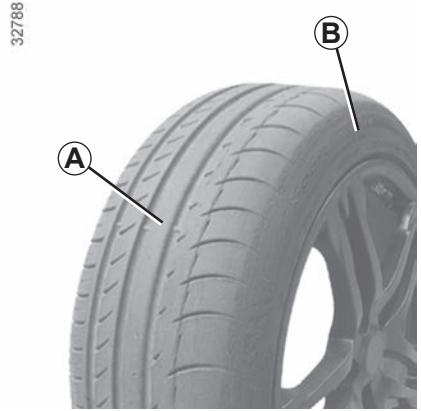

The kit repairs tyres when tread ***A*** has been damaged by objects smaller than 4 mm. It cannot repair all types of puncture, such as cuts larger than 4 mm, or cuts in tyre sidewall ***B***.

Ensure also that the wheel rim is in good condition.

Do not pull out the foreign body causing the puncture if it is still in the tyre.

Do not attempt to use the inflation kit if the tyre has been damaged as a result of driving with a puncture.

You should therefore carefully check the condition of the tyre sidewalls before any operation.

Driving with underinflated, flat or punctured tyres can be dangerous and may make the tyre impossible to repair.

This repair is temporary.

A tyre which has been punctured should always be inspected (and repaired, where possible) as soon as possible by a specialist.

When taking a tyre which has been repaired using this kit to be replaced, you must inform the specialist.

When driving, vibration may be felt due to the presence of the repair product injected into the tyre.

The kit is only approved for inflating the tyres of the vehicle originally equipped with the kit.

It must never be used to inflate the tyres of another vehicle, or any other inflatable object (rubber ring, rubber boat, etc.).

Avoid spillage on skin when handling the repair product bottle. If droplets do leak out, rinse them off with plenty of water.

Keep the repair kit away from children.

Do not dispose of the empty bottle in the countryside. Return it to your approved dealer or to a recycling organisation.

The bottle has a limited service life which is indicated on its label. Check the expiry date.

Contact an approved dealer to replace the inflation tube and repair product bottle.

35749

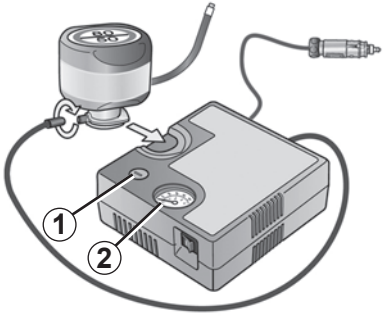

Depending on the vehicle, in the event of a puncture, use the kit located in the boot or underneath the luggage compartment carpet.

Vehicle fitted with a tyre pressure loss warning system

In the event of under-inflation (punctures, under-inflation etc.), the warning light appears on the instrument panel. ➥ 2.18.

With the engine running and the parking brake applied,

– Disconnect any accessories previously connected to the vehicle's accessories sockets;

– **Refer to the information on the inflation kit compressor** located in the boot of the vehicle and follow the instructions;

– Inflate the tyre to the recommended pressure ➥ 4.9;

– After a maximum of **15** minutes, stop inflating and read the pressure (on pressure gauge ***2***);

Note: while the bottle is emptying (approximately 30 seconds), the pressure gauge ***2*** will indicate briefly a pressure of **6** bar, then the pressure drops.

– Adjust the pressure: to increase it, continue inflation with the kit; to reduce it, press button ***1***.

If a minimum pressure of 1.8 bar is not reached after 15 minutes, repair is not possible; do not drive the vehicle but contact an approved dealer.

Before using this kit, park the vehicle at a sufficient distance from traffic, switch on the hazard warning lights, apply the handbrake, ask all passengers to leave the vehicle and keep them away from traffic.

If the vehicle is parked on the hard shoulder, you must warn other road users of your vehicle's presence with a warning triangle or with other devices as per the legislation applying to the country you are in.

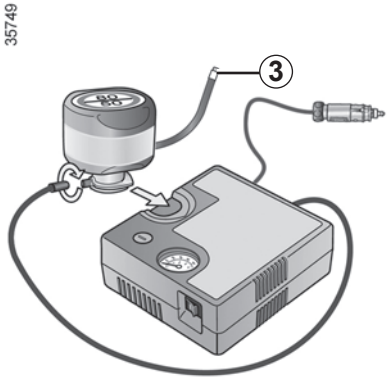

Once the tyre is correctly inflated, remove the kit: unscrew the inflation adapter slowly from the container ***3*** to prevent any product spatter and store the container in plastic packaging to prevent product leaks.

– Affix the driving recommendation label (located under the container) to the dashboard where the driver can see it.
– Put the kit away.
– At the end of this initial inflation operation, air will still escape from the tyre. You must drive a short distance in order to seal the hole.
– Start immediately and drive at a speed between 12 to 37 mph (20 to 60 km/h) in order to distribute the product evenly in the tyre; after driving a distance of 2 miles (3 km), stop and check the pressure.
– If the pressure is higher than 1.3 bar but lower than the recommended pressure (refer to the label affixed to the edge of the driver's door), adjust it. Otherwise, contact an approved dealer: the tyre cannot be repaired.

Precautions when using the kit

The kit should not be operated for more than 15 consecutive minutes.
The container must be replaced after the first use even if liquid remains inside.

Nothing should be placed around the driver's feet as such objects may slide under the pedals during sudden braking manoeuvres and obstruct their use.

Please be aware that a poorly tightened or missing valve cap can make the tyres less airtight and may lead to pressure loss.
Always use valve caps identical to those fitted originally and tighten them fully.

Following repair with the kit, do not travel further than 120 miles (200 km). In addition, reduce your speed and under no circumstances exceed 48 mph (80 km/h). The sticker, which you must affix in a prominent position on the dashboard, reminds you of this.
Depending on the country or local legislation, a tyre repaired with the inflation kit may need to be replaced.

TYRES (1/4)

The tyres are the only contact between the vehicle and the road, so it is essential to keep them in good condition.
You must make sure that your tyres conform to local road traffic regulations.

Maintaining the tyres

The tyres must be in good condition and the tread form must have sufficient depth; tyres approved by our Technical Department have wear warning strips ***1*** that are **indicators moulded into the tread at several points**.

When the tyre tread has been worn to the level of the wear indicators, **they become visible *2*:** it is **then** necessary to replace your tyres because the tread rubber is **no more than 1.6 mm deep, resulting in poor roadholding on wet roads**.

An overloaded vehicle, long journeys by motorway, particularly in very hot weather, or continual driving on poorly surfaced minor roads will lead to more rapid tyre wear and affect safety.

Incidents which occur when driving, such as striking the kerb, may damage the tyres and wheel rims, and could also lead to misalignment of the front or rear axle geometry. In this case, have the condition of these checked by an approved dealer.

Tyre pressures

Adhere to the tyre pressures. The tyre pressures should be checked at least once a month and additionally before any long journey (refer to the label affixed to the edge of the driver's door) ➥ 4.9.

Incorrect tyre pressures lead to abnormal tyre wear and unusually hot running. These are factors which may seriously affect safety and lead to:

– poor road holding;

– risk of bursting or tread separation.

The pressure depends on the load and the speed of use. Adjust the pressure according to the conditions of use (refer to the label affixed to the edge of the driver's door).

Pressures should be checked when the tyres are cold; ignore higher pressures which may be reached in hot weather or following a fast journey.

If tyre pressures cannot be checked when the tyres are **cold,** the normal pressures must be increased by **0.2** to **0.3** bar (or **3 PSI**).

Never deflate a hot tyre.

Please be aware that a poorly tightened or missing valve cap can make the tyres less airtight and lead to pressure loss.

Always use valve caps identical to those fitted originally and tighten them fully.

Vehicle fitted with a tyre pressure monitoring system

In the event of under-inflation (punctures, under-inflation, etc.), the warning light appears on the instrument panel ➥ 2.18.

Changing wheels around

This practice is not recommended.

For safety reasons, it is forbidden to exchange the 17" front wheels (tyres and/or rims) with the rear wheels.

Fitting new tyres

For your safety, please respect the speed limit.

When they need to be replaced, only tyres of the same make, size, type and profile should be used on a single axle.

They must: either have a load capacity and a speed capacity at least equal to the original tyres, or correspond to those recommended by your authorised dealer.

Failure to heed these instructions could endanger your safety and affect your vehicle's roadworthiness.

Risk of loss of control of the vehicle.

Use in winter

Chains

For safety reasons, fitting snow chains to the rear axle is strictly forbidden.

Chains cannot be fitted to tyres which are larger than those originally fitted to the vehicle.

Snow or Winter tyres

We would recommend that these be fitted to all **four wheels** to ensure that your vehicle retains maximum adhesion.

Warning: These tyres sometimes have a specific direction of rotation and a maximum speed index which may be lower than the maximum speed of your vehicle.

17" wheels cannot be fitted with chains.

If you wish to use **special equipment**, consult an approved dealer.

Chains may only be fitted to tyres of the same size as those originally fitted to **your vehicle**.

Chains may be fitted, provided that they are specific chains. We would advise you to consult an approved dealer.

Studded tyres

This type of equipment may only be used for a limited period and as laid down by local legislation. It is necessary to observe the speed specified by current legislation.

These tyres must, at a minimum, be fitted to the two front wheels.

NB:

The use of snow tyres, winter tyres or studded tyres significantly reduces the vehicle range.

In all cases, we would recommend that you contact an approved Dealer who will be able to advise you on the choice of equipment which is most suitable for your vehicle.

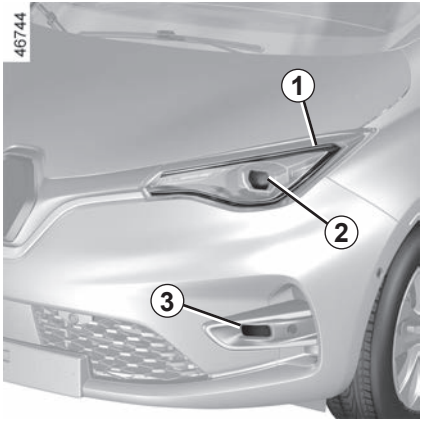

LED daytime running lights/ side lights *1*

(depending on the vehicle)

Please see an authorised dealer.

Direction indicators/dipped beam headlights/LED main beam headlights *2*

Please see an authorised dealer.

LED front fog lights/ cornering lights *3*

(depending on the vehicle)

Consult an authorised dealer.

Additional lights

If you wish to fit fog lights to your vehicle, please see an authorised dealer.

Any operation on (or modification to) the electrical system must be performed by an approved dealer since an incorrect connection might damage the electrical equipment (harness, components and in particular the alternator). In addition, your Dealer has all the parts required for fitting these units.

REAR LIGHTS AND SIDE LIGHTS: changing bulbs (1/2)

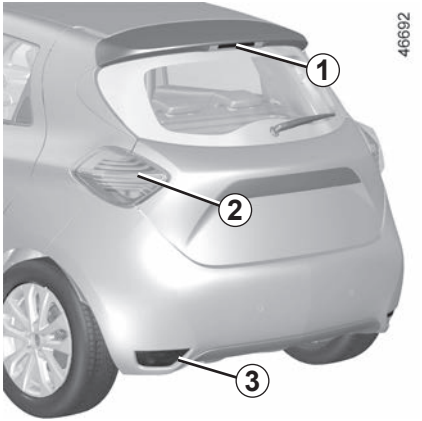

High level brake light *1*

Consult an approved dealer.

Direction indicator/brake and side lights *2*

Consult an approved dealer.

Reversing lights and rear fog lights *3*

Access bulb holder via the underneath of the vehicle, then unscrew it by turning towards the centre of the vehicle.

Fog light
Bulb type: PR21W.

Reversing light
Bulb type: P21W.

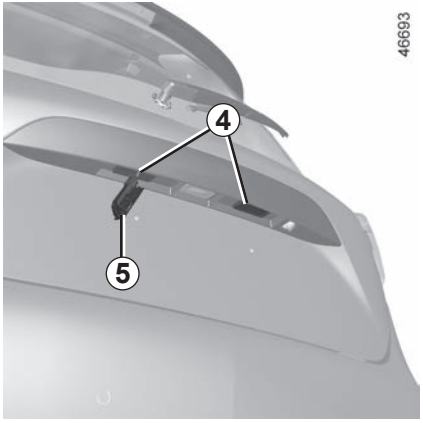

Number plate lights *4*

– Unclip light ***4*** by pressing tab ***5***;

– remove the light cover to gain access to the bulb.

Bulb type: W5W.

The bulbs are under pressure and can break when replaced.

Risk of injury.

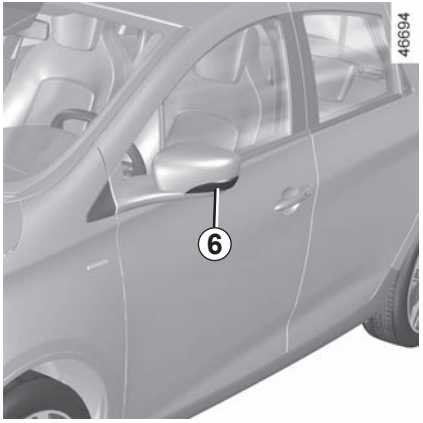

Indicator lights *6*

Consult an approved dealer.

INTERIOR LIGHTING: changing bulbs (1/2)

Map reading lights *1*

Consult an authorised dealer.

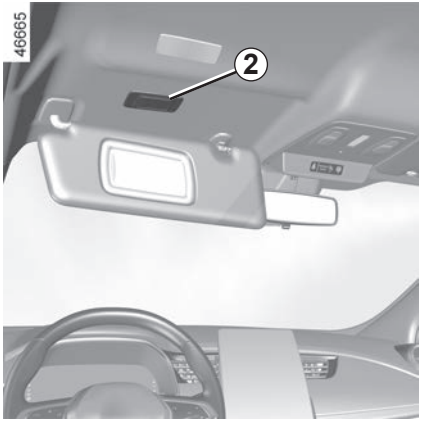

Courtesy mirror lights *2*

Please consult an authorised dealer.

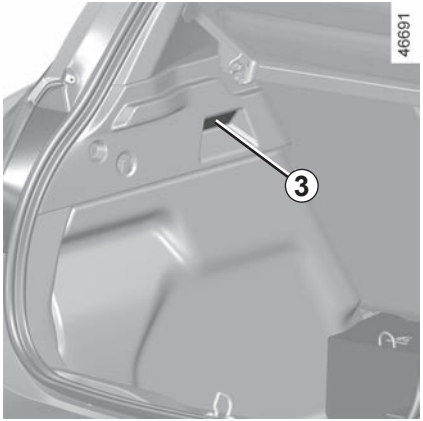

Luggage compartment light

Unclip the light ***3*** by pressing the tab on its left side (using a flat-bladed screwdriver or similar).

Remove the bulb concerned.

Bulb type: W5W.

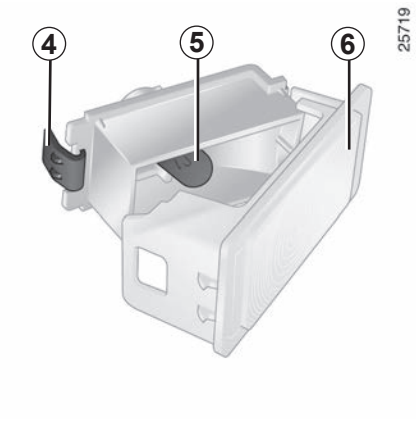

Disconnect the light.

Press tab ***4*** to release lens ***6*** and access bulb ***5***.

Bulb type: W5W.

The bulbs are under pressure and can break when replaced.

Risk of injury.

Replacing the battery

When the message “Keycard Battery Low” appears on the instrument panel, replace the battery in the card:

– slide the rear casing ***1*** downwards while pressing on zone ***A***;
– remove the battery cover ***2***;
– remove the battery by pressing on one side and lifting the other;
– replace it according to the direction and template shown inside the cover.

When refitting, proceed in the reverse order, then press one of the buttons on the card four times, close to the vehicle: the next time the vehicle is started, the message will disappear.

Check that the cover is clipped shut.

Note: Do not touch the electronic circuit or contacts on the card when replacing the battery.

The batteries are available from approved Dealers, and their service life approximately two years. Check that there is no dye on the battery: risk of an incorrect electrical contact.

When they need to be replaced, be sure to use the same or equivalent type of battery (consult an Approved Dealer).

When replacing:

– make sure that the batteries are correctly inserted.

Risk of explosion.

– if the flap does not close correctly, do not use and keep out of reach of children.

Operating faults

If the battery is too weak to ensure correct operation, you will still be able to start and lock/unlock the vehicle ➥ 1.31.

Do not throw away your used batteries; give them to an organisation responsible for collecting and recycling batteries.

Precautions relating to batteries:

- keep (new or used) batteries out of reach of children;
- do not swallow batteries;

  Risk of chemical burns which may lead to death.
- if ingested or inserted into any part of the body, consult a doctor as soon as possible.

Fuse box

If any electrical component does not work, check the condition of the fuses.

Unclip the access flap ***A***.

In accordance with local legislation or as a precautionary measure:

Obtain an emergency kit containing a set of spare bulbs and fuses from an approved Dealer.

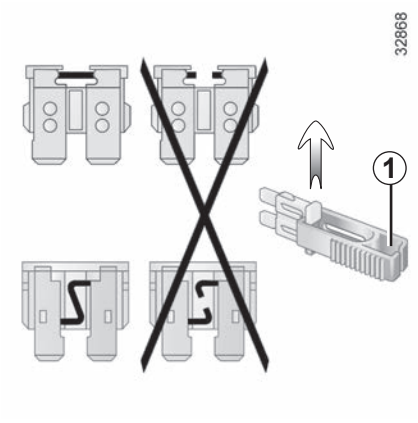

Tweezers *1*

Remove the fuse using tweezers ***1***, located at the back of flap ***A***.

To remove the fuse from the tweezers, slide the fuse to the side.

It is not advisable to use the free fuse locations.

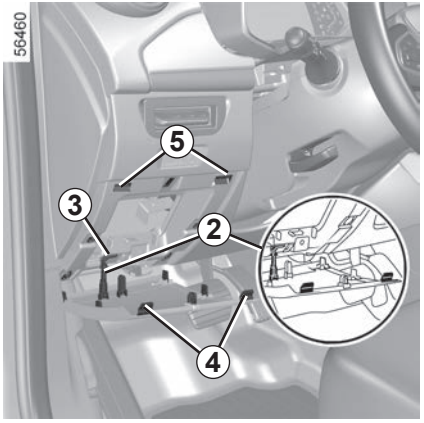

Refitting the flap *A*

Bring the flap ***A*** towards the dashboard. Insert the ***2*** component into the slot ***3***.

Slide the ***2*** component into the slot ***3*** towards the left, then downwards so that the clips ***4*** of the flap are opposite the mountings ***5***.

Press on the flap to clip it.

Allocation of fuses
(the presence of certain fuse depends on the vehicle equipment level)

Symbol	Allocation
	Windscreen washer
	Multimedia accessories socket, multimedia screen
	Front cigarette lighter, front and rear second row accessories socket
	Horn
	Heated rear view mirrors
STOP	Brake lights, passenger compartment central unit
BCM	Passenger compartment centre unit, rear wiper, rear fog light
	Direction indicator lights, hazard warning lights, high level brake lights
	Electric window

Use the fuse allocation label in the storage compartment to identify the fuses.

Certain fuses should only be replaced by a qualified professional. These fuses are not listed on the label.

Only change the fuses represented on the label.

Check the fuse in question and **replace it,** if necessary, **by a fuse of the same rating**.

If a fuse is fitted where the rating is too high, it may cause the electrical circuit to overheat (risk of fire) in the event of an item of equipment using an excessive amount of current.

FITTING A RADIO

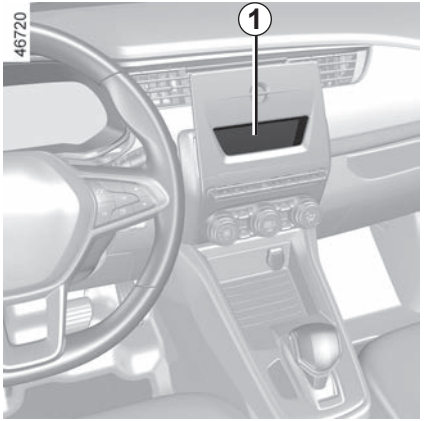

Radio location *1*

Unclip the blanking cover. The aerial, + and – supply and speaker wire connections are located behind it.

Door speakers *2*

To install any equipment, please consult an authorised dealer.

- In all cases, it is very important to follow the manufacturer's instructions carefully.
- The specifications of the brackets and wires (available from our network) vary depending on the equipment level of your vehicle and the type of radio. Consult an approved Dealer to find out the correct part number.
- No work may be carried out on the vehicle's electrical or radio circuits, except by approved dealers: an incorrectly connected system may result in damage being caused to the electrical equipment and/or the components connected to it.

INSTALLATION AND USE OF ACCESSORIES: important recommendations

Electrical and electronic accessories
Before installing this type of accessory (particularly for transmitters/receivers: frequency bandwidth, power level, position of the aerial, etc.), make sure it is compatible with your vehicle. You can get advice from an authorised dealer.
Before connecting an accessory to a socket, please ensure that you do not exceed the maximum power authorised for the socket ➥ 3.15, ➥ 3.22. **Fire hazard**.

Any work on the vehicle's electrical and/or electronic circuit must only be carried out by a qualified professional. Any incorrect connection and/or installation of electrical/electronic accessories not approved by the manufacturer may cause:
– damage to the electrical and/or electronic equipment;
– damage to the components connected to it;
– the collection and use of vehicle data;
– an invasion of privacy (modification, deletion or unwarranted access to personal data).
Risk of serious accidents. Risk of invasion of privacy.

If you have electrical equipment fitted in future, make sure that you are notified of the rating and position of the corresponding fuse.
Using the diagnostic socket
The use of electronic accessories on the diagnostic socket may cause serious disturbance to the vehicle's electronic systems and/or cause invasion of privacy (modification, deletion or unwarranted access to personal data). For your safety, we recommend that you only use electronic accessories approved by the manufacturer: consult an approved dealer. **Serious accident risk**. **Risk of invasion of privacy.**
Fitting aftermarket accessories
If you wish to install accessories on the vehicle: please contact an authorised dealer. Also, to ensure the correct operation of your vehicle, and to avoid any risk to your safety, we recommend that you use only accessories specifically designed for your vehicle, which are the only accessories for which the manufacturer will provide a warranty.
If you are using an anti-theft device, only attach it to the brake pedal.
Obstructions to the driver
On the driver's side, only use mats suitable for the vehicle, attached with the pre-fitted components, and check the fitting regularly. Do not lay one mat on top of another.
There is a risk of wedging the pedals.

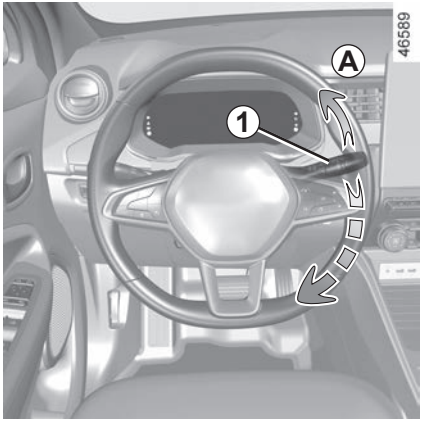

Replacing windscreen wiper blades *2*

To replace the wipers, first put them in the service position ***B***.

With the ignition on and the engine stopped:

– lower the windscreen wiper stalk fully (fast continuous wipe position). The wiper arms stop in a position ***B*** away from the bonnet;

– press the button ***4*** firmly then remove the blade upwards.

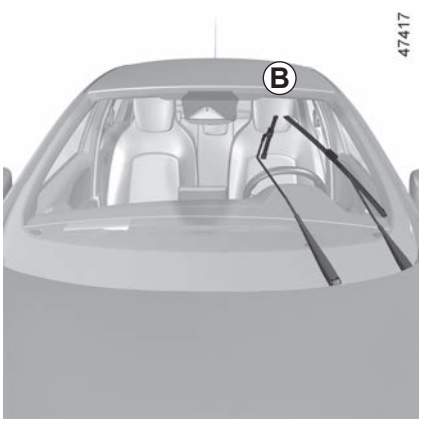

To refit

To refit the wiper blade ***2***, insert it in its housing in the arm ***3***, then clip it until you hear a click. Make sure that the blade is correctly locked in position.

To return the blades to lowered position, make sure that the blades are folded down onto the windscreen then set the ***1*** stalk to position ***A*** (single sweep): the windscreen wiper blades will fold into the bonnet when the ignition is switched on.

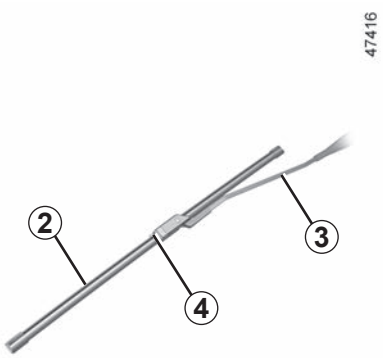

Keep monitoring the condition of the wiper blades. How long they last depends on you:

– clean the blades and the windscreen regularly with soapy water;

– do not use them when the windscreen is dry;

– free them from the windscreen when they have not been used for a long time.

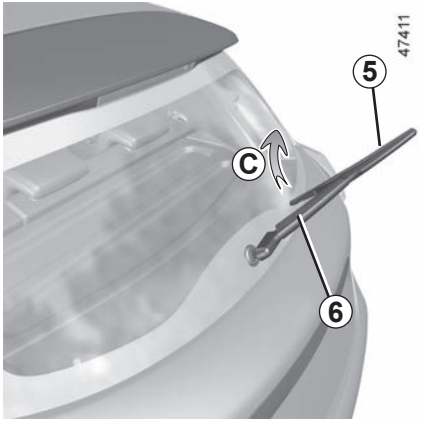

Rear screen wiper blade *5*

Stalk in stop position (deactivated):

– lift the wiper arm ***6***;

– pivot the rear screen wiper blade ***5*** (***C*** movement) until it unclips;

– release rear screen wiper blade ***5*** by pulling on it.

To refit

To refit the wiper blade, proceed in reverse order to removal. Make sure that the blade is correctly locked in position.

Keep monitoring the condition of the wiper blades. How long they last depends on you:

– clean the blades and the windscreen regularly with soapy water;

– do not use them when the windscreen is dry;

– free them from the windscreen when they have not been used for a long time.

– In frosty weather, make sure that the wiper blades are not stuck by ice (to avoid the risk of the motor overheating).

– Check the condition of the wiper blades.
They should be replaced as soon as they become less efficient: approximately once a year.

When changing the blade, when it has been removed, do not let the wiper arm fall against the window: risk of breaking the window.

Before changing the rear wiper blade, make sure the stalk is in the stop position (deactivated).

Risk of injury.

Choice of breakdown service

In the event of an energy fault

In the event of a full discharge of the traction battery, towing with the front wheels raised or onboard a flat-bed truck is permitted.

All other cases

Only towing on a flatbed truck is permitted.

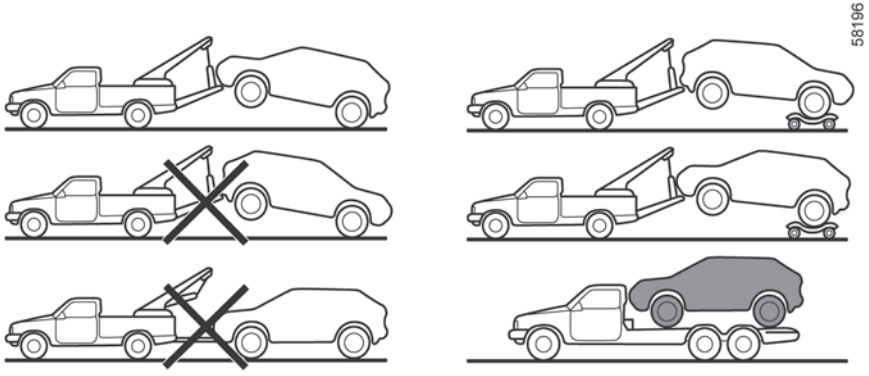

Towing the vehicle

Only exceptionally, in cases of power failure (complete discharge of the traction battery), can you tow your vehicle with the front wheels raised.

Towing on a flatbed truck

Breakdown recovery **must** be performed on a flat surface under all circumstances except where the vehicle is immobilised following a full discharge of the traction battery.

Before any towing or recovery operation, unlock the steering column: with the card in the passenger compartment, engage the gear selection lever in position **N** then press the engine start button for approximately **two seconds**.

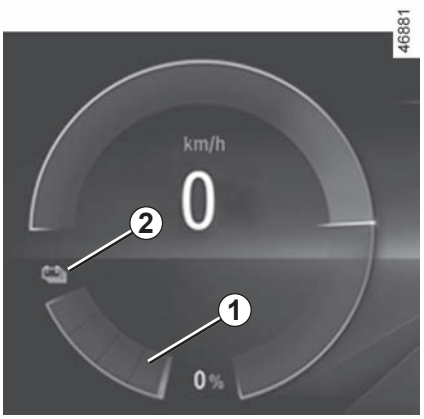

In the event of an energy fault: towing

In the event of a fully discharged traction battery:

– warning light ***2*** flashes in yellow;
– the indicator ***1*** shows an empty battery.

It is possible to recover on a flatbed truck or tow the vehicle using the tow eye, following the instructions below.

Before towing, unlock the steering column: with the card in the passenger compartment, engage the gear lever in position **N**, then press the engine start button for approximately **two seconds**.

The column is unlocked, the accessory functions are supplied: the vehicle lights can be used (hazard warning lights, brake lights etc.). The towed vehicle's lights must be switched on at night.

The speed specified by current legislation for towing must always be observed.

Once you have finished towing, press the engine start button twice (risk of running down the 12 V battery).

When the engine is stopped, power-assisted steering is no longer operational.

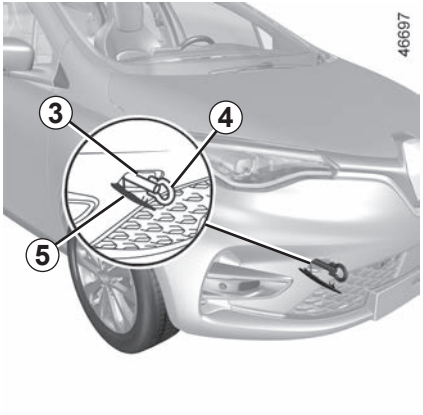

Access to the towing point

Only use the front towing point *3*.

This towing point may only be used for towing: never use it for lifting the vehicle directly or indirectly.

Unclip the cover ***5*** by inserting a flat-blade screwdriver or similar under the cover.

Tighten the towing hitch *4* fully: first by hand until it stops then finish by locking it with the lever.

Only use tow ring ***4*** and the lever located under the luggage compartment carpet in the tool kit ➥ 5.2.

Note: please do not use a damaged towing eye.

Leave the card in the vehicle during towing.

Risk of the steering column locking.

Ensure that the towing eye is bolted correctly.

Risk of losing the towed object.

Do not leave the tools unsecured inside the vehicle as they may come loose under braking.

After use, check that all the tools are correctly clipped into the tool kit, then, depending on the vehicle, position it correctly in its housing.

Risk of injury.

OPERATING FAULTS (1/5)

The following advice will enable you to carry out quick, temporary repairs. For safety reasons you should always contact an approved dealer as soon as possible.

FAULTS	POSSIBLE CAUSES	WHAT TO DO
Impossible to charge the traction battery. The charging flap warning light flashes red.	The outdoor temperature is lower than -26°C.	Recharge your vehicle in a more suitable environment. If necessary ➥ 5.23.
	No electrical current in the wall socket or poor connection of cable to domestic socket.	Check your installation (circuit breaker, programmer, etc.). Check the connections (charging socket, etc.) ➥ 1.8.
	The cord is defective.	Please see an authorised dealer to replace it.
Impossible to charge the traction battery. The charging flap warning light flashes blue.	The charging cord is not correctly locked to the vehicle.	Plug the charging cable correctly in to the vehicle. ➥ 1.8.
The programmable air conditioning fails to work.	One of the usage conditions is not complied with (the traction battery is not charged, etc).	➥ 3.11.

OPERATING FAULTS (2/5)

The following advice will enable you to carry out quick, temporary repairs. For safety reasons you should always contact an approved dealer as soon as possible.

FAULTS	POSSIBLE CAUSES	WHAT TO DO
The steering column remains locked.	Steering wheel locked.	Move the steering wheel while pressing the engine start button ➥ 2.2.
Steering becomes heavy.	Assistance overheating.	Drive carefully at reduced speed, be aware of the level of force in the steering wheel needed to turn the wheels.
	Fault with the electric assistance motor. Fault in the assistance system.	Consult an authorised dealer.

OPERATING FAULTS (3/5)

FAULTS	POSSIBLE CAUSES	WHAT TO DO
The card does not lock or unlock the doors.	Card battery is flat.	Replace the battery or have it replaced. You will still be able to lock, unlock, and start your vehicle. ➥ 1.33 and ➥ 2.2.
	Use of appliances operating on the same frequency as the remote control (mobile phone, etc.).	Stop using the devices or use the key that is built into the card ➥ 1.8.
	Vehicle located in a high electro-magnetic radiation zone. Secondary 12 V battery discharged.	Use the key that is built into the card ➥ 1.8.
	Desynchronisation of the card.	Unlock the driver's door by inserting the key integrated in the card into the door lock ➥ 1.33 then place the card in the placement area ➥ 2.2 and press the START button to synchronise the card.
The message "Place card close START and push" appears on the instrument panel	The card battery is flat or the card is out of synch.	Check the card battery status or place the card in the placement area ➥ 2.2 provided for this purpose.

OPERATING FAULTS (4/5)

Electrical equipment		POSSIBLE CAUSES	ACTION REQUIRED
Vibrations.		Tyres not inflated to correct pressures, incorrectly balanced or damaged.	Check the tyre pressures. If this is not the problem, have them checked by an approved Dealer.
The wipers do not work.		Wiper blades stuck.	Free the blades before using the wipers.
		Broken windscreen wiper fuse.	Consult an approved dealer.
		Blown rear screen wiper fuse (intermittent, permanently stopped).	Replace the fuse or have it replaced ➥ 5.17.
		Motor fault.	Consult an approved dealer.
The wiper does not stop.		Faulty electrical controls.	Consult an approved dealer.
Direction indicators flashing more quickly.		Faulty rear bulb.	Replace the bulb or have it replaced.
The indicators are not working.	On one side only:	Faulty rear bulb.	Replace the bulb or have it replaced.
	On both sides:	– blown fuse;	Replace the fuse or have it replaced ➥ 5.17.
		– faulty flasher unit.	Needs replacing: please see an authorised dealer.

OPERATING FAULTS (5/5)

Electrical equipment		POSSIBLE CAUSES	ACTION REQUIRED
The headlights are not working.	Only one:	– faulty rear bulb;	Replace the bulb or have it replaced.
		– disconnected wire or incorrectly-positioned connector.	Check and reconnect the wire or the connector.
	Both:	the circuit is fused.	Check and replace if necessary.
The headlights do not switch off.		Faulty electrical controls.	Consult an approved dealer.
Traces of condensation in the headlights or rear lights.		Traces of condensation may be due to a natural phenomenon caused by variations in temperature and humidity. The traces will disappear slowly once the lights are switched on.	

Section 6: technical specifications

Vehicle identification plates 6.2
Technical Information for the emergency services 6.3
Engine identification 6.4
Weights 6.5
Dimensions 6.6
Replacement parts and repairs 6.7
Service sheets 6.8
Anticorrosion check 6.14

VEHICLE IDENTIFICATION PLATES

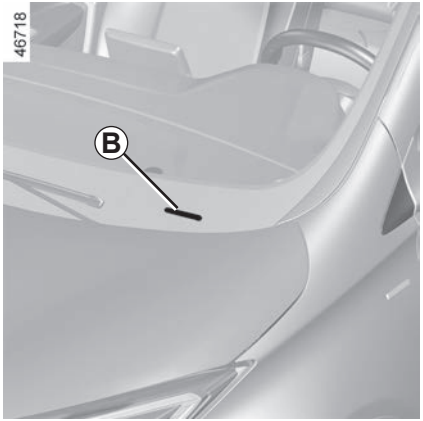

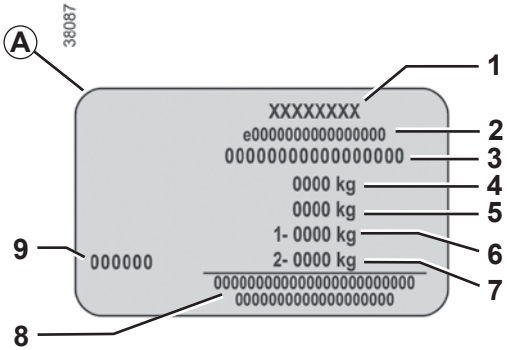

The information shown on the vehicle identification plate should be quoted on all correspondence or orders.

Vehicle identification plate *A*

1 Manufacturer name.

2 EC design number or approval number.

3 Identification number.
Depending on the vehicle, this information is also given on marking *B*.

4 MMAC (Maximum Authorised Mass).

5 MTR (Gross Train Weight: vehicle fully loaded, with trailer).

6 MMTA (Maximum Permissible Weight) front axle.

7 MMTA rear axle.

8 Reserved for related or additional entries.

9 Paint reference (colour code).

TECHNICAL INFORMATION FOR THE EMERGENCY SERVICES

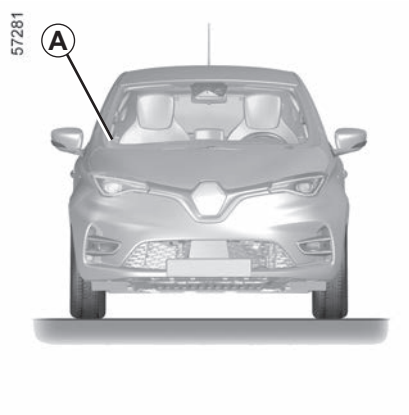

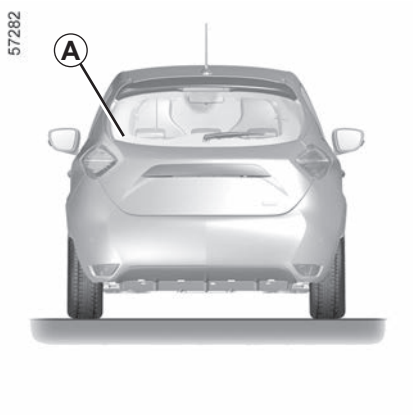

The QR Code on the ***A*** label allows emergency workers using a tablet or smartphone to immediately access the technical information useful for working on the vehicle in the event of an accident.

Ensure that the ***A*** label is always visible and present on the windscreen as well as the rear screen.

Any modification or damage would prevent access to the information.

ENGINE IDENTIFICATION

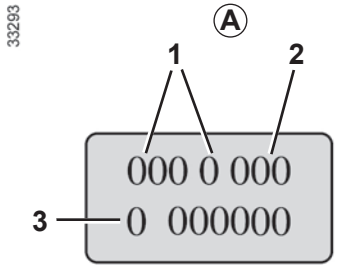

Please quote the engine identification information in area *A* in all correspondence or orders.

(Location varies depending on engine)

1 Engine type.

2 Engine suffix.

3 Engine serial number.

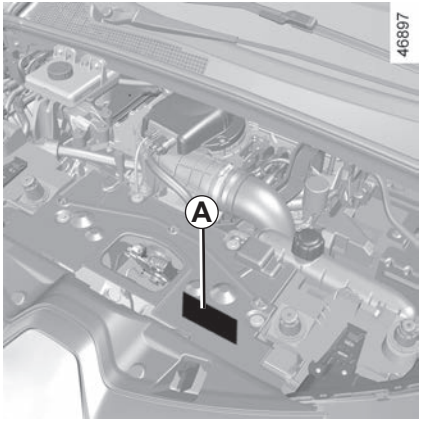

Engine specification

Engine type: 5AGEN3

WEIGHTS (in kg)

The weights indicated for a basic vehicle without options: they vary depending on your vehicle's equipment. Consult your approved Dealer.

Maximum Authorised Mass (MMAC) **Gross Train Weight (MTR)**	Weights indicated on the vehicle identification plate ➥ 6.2.
Braked Trailer Weight	Prohibited
Unbraked Trailer Weight	Prohibited
Permissible nose weight	Prohibited
Permissible load on the roof with the carrying device	Prohibited

DIMENSIONS (in metres)

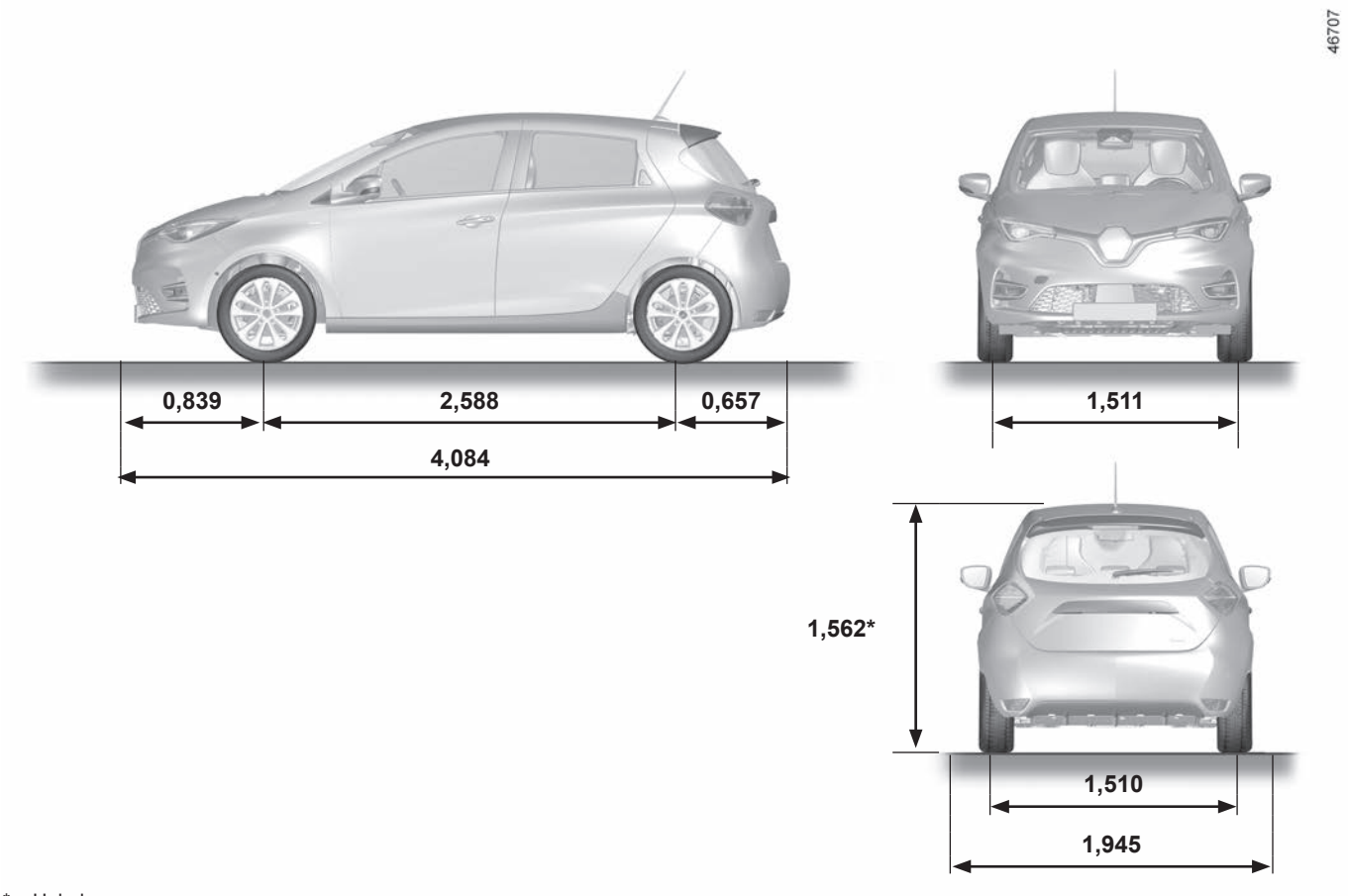

* Unladen

REPLACEMENT PARTS AND REPAIRS

Original parts are based on strict specifications and are subject to highly-specialised tests. Therefore, they are of at least the same level of quality as the parts fitted originally.

If you always fit genuine replacement parts to your vehicle, you will ensure that it performs well. Furthermore, repairs carried out within the manufacturer's Network using original parts are guaranteed according to the conditions set out on the reverse of the repair order.

SERVICE SHEETS (1/6)

VIN: .....

Date: Miles (Km):	Invoice number:	Comments/miscellaneous
Type of operation: Service □ ..... □ **Anti-corrosion check:** OK □ Not OK* □ *See specific page	**Stamp**	

Date: Miles (Km):	Invoice number:	Comments/miscellaneous
Type of operation: Service □ ..... □ **Anti-corrosion check:** OK □ Not OK* □ *See specific page	**Stamp**	

Date: Miles (Km):	Invoice number:	Comments/miscellaneous
Type of operation: Service □ ..... □ **Anti-corrosion check:** OK □ Not OK* □ *See specific page	**Stamp**	

SERVICE SHEETS (2/6)

VIN: .....

Date: Miles (Km):	Invoice number:	Comments/miscellaneous
Type of operation: Service □ ..... □ **Anti-corrosion check:** OK □ Not OK* □ *See specific page	**Stamp**	

Date: Miles (Km):	Invoice number:	Comments/miscellaneous
Type of operation: Service □ ..... □ **Anti-corrosion check:** OK □ Not OK* □ *See specific page	**Stamp**	

Date: Miles (Km):	Invoice number:	Comments/miscellaneous
Type of operation: Service □ ..... □ **Anti-corrosion check:** OK □ Not OK* □ *See specific page	**Stamp**	

SERVICE SHEETS (3/6)

VIN: .....

Date: Miles (Km):	Invoice number:	Comments/miscellaneous
Type of operation: Service □ ..... □ **Anti-corrosion check:** OK □ Not OK* □ *See specific page	**Stamp**	

Date: Miles (Km):	Invoice number:	Comments/miscellaneous
Type of operation: Service □ ..... □ **Anti-corrosion check:** OK □ Not OK* □ *See specific page	**Stamp**	

Date: Miles (Km):	Invoice number:	Comments/miscellaneous
Type of operation: Service □ ..... □ **Anti-corrosion check:** OK □ Not OK* □ *See specific page	**Stamp**	

SERVICE SHEETS (4/6)

VIN: .....

Date: Miles (Km):	Invoice number:	Comments/miscellaneous
Type of operation: Service □ ..... □ **Anti-corrosion check:** OK □ Not OK* □ *See specific page	**Stamp**	

Date: Miles (Km):	Invoice number:	Comments/miscellaneous
Type of operation: Service □ ..... □ **Anti-corrosion check:** OK □ Not OK* □ *See specific page	**Stamp**	

Date: Miles (Km):	Invoice number:	Comments/miscellaneous
Type of operation: Service □ ..... □ **Anti-corrosion check:** OK □ Not OK* □ *See specific page	**Stamp**	

SERVICE SHEETS (5/6)

VIN: .....

Date: Miles (Km):	Invoice number:	Comments/miscellaneous
Type of operation: Service □ ..... □ **Anti-corrosion check:** OK □ Not OK* □ *See specific page	**Stamp**	

Date: Miles (Km):	Invoice number:	Comments/miscellaneous
Type of operation: Service □ ..... □ **Anti-corrosion check:** OK □ Not OK* □ *See specific page	**Stamp**	

Date: Miles (Km):	Invoice number:	Comments/miscellaneous
Type of operation: Service □ ..... □ **Anti-corrosion check:** OK □ Not OK* □ *See specific page	**Stamp**	

SERVICE SHEETS (6/6)

VIN: .....

Date: Miles (Km):	Invoice number:	Comments/miscellaneous
Type of operation: Service □ ..... □ **Anti-corrosion check:** OK □ Not OK* □ *See specific page	**Stamp**	

Date: Miles (Km):	Invoice number:	Comments/miscellaneous
Type of operation: Service □ ..... □ **Anti-corrosion check:** OK □ Not OK* □ *See specific page	**Stamp**	

Date: Miles (Km):	Invoice number:	Comments/miscellaneous
Type of operation: Service □ ..... □ **Anti-corrosion check:** OK □ Not OK* □ *See specific page	**Stamp**	

ANTICORROSION CHECK (1/5)

If the continuation of the warranty is subject to repair, it is indicated below.

VIN: .....

Corrosion repair operation to be carried out: Date of repair:	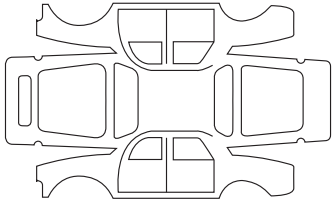	**Stamp**
Repair to be carried out: Date of repair:	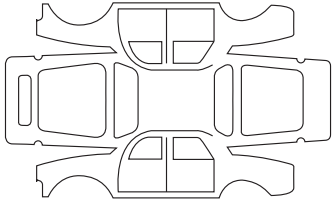	**Stamp**
Repair to be carried out: Date of repair:	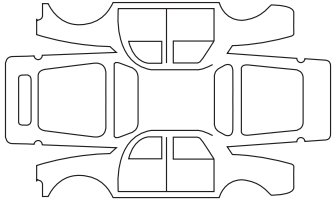	**Stamp**

ANTICORROSION CHECK (2/5)

If the continuation of the warranty is subject to repair, it is indicated below.

VIN: .....

Corrosion repair operation to be carried out: Date of repair:	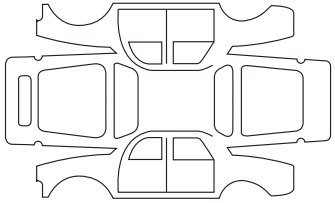	**Stamp**
Repair to be carried out: Date of repair:	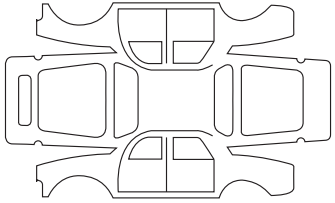	**Stamp**
Repair to be carried out: Date of repair:	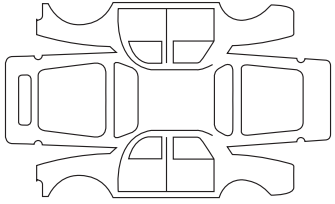	**Stamp**

ANTICORROSION CHECK (3/5)

If the continuation of the warranty is subject to repair, it is indicated below.

VIN: .....

Corrosion repair operation to be carried out: Date of repair:	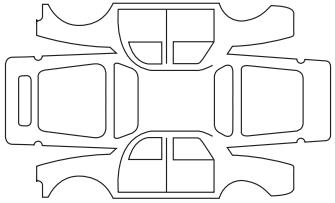	**Stamp**
Repair to be carried out: Date of repair:	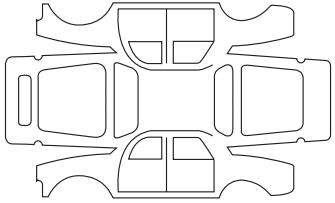	**Stamp**
Repair to be carried out: Date of repair:	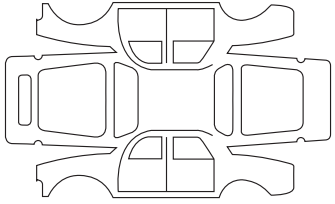	**Stamp**

ANTICORROSION CHECK (4/5)

If the continuation of the warranty is subject to repair, it is indicated below.

VIN: .....

Corrosion repair operation to be carried out: Date of repair:	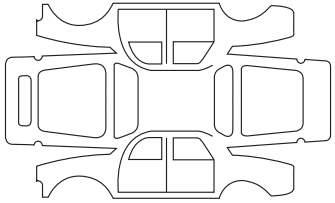	**Stamp**
Repair to be carried out: Date of repair:	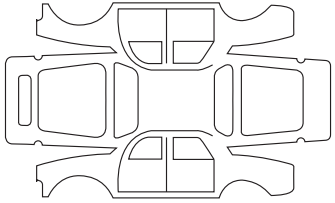	**Stamp**
Repair to be carried out: Date of repair:	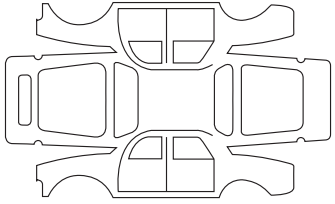	**Stamp**

ANTICORROSION CHECK (5/5)

If the continuation of the warranty is subject to repair, it is indicated below.

VIN: .....

Corrosion repair operation to be carried out: Date of repair:	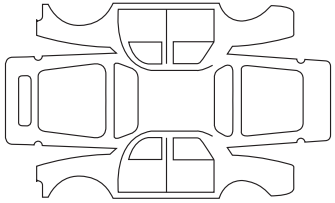	**Stamp**
Repair to be carried out: Date of repair:	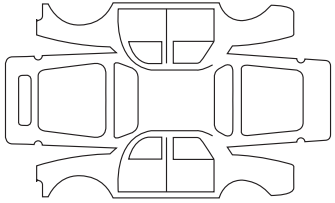	**Stamp**
Repair to be carried out: Date of repair:	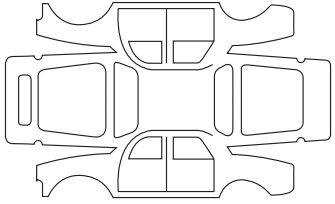	**Stamp**

ALPHABETICAL INDEX (1/6)

12
12 volt battery
maintenance ..... 4.7 – 4.8
12 volt battery ..... 1.2 → 1.6, 4.7 – 4.8

400
«400 volt» electrical circuit ..... 1.2 → 1.6

A
ABS ..... 2.30 → 2.34
access
vehicle ..... 0.2, 1.22 → 1.35
accessories 5.20
accessories socket 3.22
additional methods of restraint
side protection 1.54
to the front seat belts ..... 1.47 → 1.52
to the rear seat belts ..... 1.47 → 1.53
additional methods of restraint ..... 1.47 → 1.52, 1.55
adjusting your driving position 1.41
air bag
activating the front passenger air bags 1.73
air bag ..... 0.6, 1.47 → 1.55
air conditioning ..... 3.4 → 3.10, 3.13 – 3.14
air vents ..... 3.2 – 3.3
airbag
front passenger airbag deactivation 1.71
anti-corrosion check ..... 6.14 → 6.18
anti-corrosion protection 4.10
anti-lock braking system: ABS ..... 2.30 → 2.34
armrest
front 3.20
ashtray 3.22
assisted parking ..... 2.74 → 2.78
audible and visual signals 1.99
automatic gearbox (use) ..... 2.5 → 2.7
automatic locking of the doors while driving 1.36

B
battery 0.8, 1.79
blind spot warning signal ..... 2.44 → 2.48
blind spot: warning signal ..... 2.44 → 2.48
bonnet ..... 4.2 – 4.3
brake fluid 4.6
breakdown recovery 0.9
bulbs
changing ..... 0.9, 5.11 – 5.12

C
card ..... 1.22 → 1.24, 1.31 → 1.35
card: battery ..... 5.15 – 5.16, 5.16
card: use 1.30
central door locking ..... 1.22 → 1.24, 1.30, 1.33 → 1.36, 1.94 – 1.95
changing a bulb ..... 5.11 – 5.12
changing gear ..... 2.5 → 2.7
charge meter 1.83, 2.13
charge programming ..... 1.20 – 1.21
charging cord ..... 1.8 → 1.21
charging flap ..... 1.8 → 1.19
charging socket ..... 1.2 → 1.6, 1.8 → 1.19
child restraint/seat ..... 1.56 → 1.73
child safety ..... 0.3, 1.30, 1.32, 1.52, 1.56 → 1.73, 3.16 – 3.17
child seats ..... 1.56 → 1.70
children ..... 0.3, 1.31 – 1.32, 1.56 → 1.58
children (safety) ..... 3.16 – 3.17
cleaning:
inside the vehicle ..... 4.13 – 4.14
clock ..... 1.97 – 1.98
closing the doors ..... 1.22 → 1.24, 1.31 → 1.36
configuration menu ..... 1.94 → 1.96
connected services 1.3

control instruments .....1.78 → 1.86
controls
doors/opening elements .....1.25 → 1.29
gear..... 2.11
controls .....0.4, 1.74 → 1.77
coolant 4.4
courtesy light ..... 3.18, 5.13 – 5.14
courtesy mirrors 3.18
cruise control .....1.79, 2.53 → 2.61
cruise control-speed limiter.....2.53 → 2.61
customised vehicle settings .....1.94 → 1.96
customising the vehicle settings .....1.94 → 1.96

D
dashboard.....0.4, 1.74 → 1.77
daytime running lights.....1.22 → 1.24, 1.95, 1.101, 5.10
deadlocking the doors 1.30
display .....1.74 – 1.75, 1.78 → 1.84, 2.64, 3.15
doors..... 1.31 – 1.32, 1.36, 1.94 – 1.95
doors and tailgate .....1.25 → 1.29
doors/tailgate .....1.22 → 1.36
driver assistance 0.5, 2.23 → 2.29, 2.35 → 2.52, 2.74 → 2.78
driver's position .....0.4, 1.74 → 1.81
driving ..... 0.5, 1.94 – 1.95, 2.2 → 2.11, 2.16 → 2.48, 2.53 → 2.69, 2.74 → 2.78
driving aids .....0.5, 1.95 – 1.96, 2.23 → 2.29, 2.35 → 2.52, 2.74 → 2.78
driving position
settings .....0.3, 1.37, 1.41 → 1.46
driving recommendations .....2.13 → 2.17

E
ECO driving .....2.13 → 2.15
ECO mode..... 2.15
«ECO» mode function 2.15
electric beam height adjustment..... 1.108
electric vehicle
charging .....1.8 → 1.19
driving ..... 1.6, 2.16 – 2.17
important guidelines..... 1.7
introduction .....1.2 → 1.6
noise 1.6
vehicle range ..... 2.16 – 2.17
electric windows ..... 3.16 – 3.17
electronic parking brake .....2.8 → 2.11, 2.62
electronic stability control: ESC .....2.30 → 2.34
emergency active braking.....2.23 → 2.29
emergency brake assist.....2.30 → 2.34
emergency braking .....2.23 → 2.34
energy
charge meter (function)..... 2.13
«ECO» mode 2.15
range.....2.13 → 2.15
saving 2.16
energy consumption .....1.82 → 1.84, 2.16 – 2.17
energy recovery..... 2.16
energy saving .....2.13 → 2.17
engine
access to the engine..... 0.8
engine identification..... 6.4
engine specifications 6.4
environment..... 2.12
ESC: electronic stability control .....2.30 → 2.34
external temperature ..... 1.97 – 1.98

F
faults
operating faults .....2.11, 2.37, 2.42, 2.52, 5.26 → 5.30
fitting a radio 5.19
fittings .....3.19 → 3.21
front passenger air bag deactivation 1.71
front seat adjustment ..... 1.39 – 1.40

ALPHABETICAL INDEX (3/6)

front seats
adjustment ..... 1.39 → 1.46
with manual controls 1.39
fuses ..... 0.9, 5.17 – 5.18

G
gear lever ..... 2.5 → 2.7
glove box 3.21

H
handbrake 2.8, 2.62
hands-free telephone integrated control 3.15
«hands-free» card: battery ..... 5.15 – 5.16, 5.16
«hands-free» card: use ..... 1.25 → 1.29, 5.15 – 5.16, 5.16
hazard warning lights signal 1.99, 1.101
headlight beam adjustment 1.108
headlight flashers 1.99
headrest 3.23
heated steering wheel 1.37
heating and air conditioning system 3.13
heating system ..... 3.4 → 3.12
heating, air conditioning: programming ..... 2.17, 3.11 – 3.12
heating/air conditioning programming ..... 3.11 – 3.12
horn 1.99
horn:
flash 1.99
sounding the horn 1.99
hubcap tool 5.2

I
ignition switch ..... 2.8 → 2.11, 2.62
indicators 1.99, 2.46, 5.10
indicators:
direction indicators 1.99, 5.10
exterior temperature indicator 1.97
instrument panel ..... 1.78 → 1.86, 2.8 → 2.11, 2.62
information and general advice
welcome aboard your vehicle 0.1
instrument panel ..... 0.4, 1.78 → 1.93, 1.95 – 1.96, 1.101, 2.8 → 2.11, 2.62
instrument panel messages ..... 1.85 → 1.93, 2.8 → 2.11, 2.62
interior 0.3
interior trim
maintenance ..... 4.13 – 4.14

L
lane departure warning ..... 2.35 → 2.43
Lane Keeping Assist ..... 2.39 → 2.43
lane keeping: assistance ..... 2.39 → 2.43
levels 0.8
levels:
brake fluid 4.6
coolant 4.4
windscreen washer reservoir 4.6
lighting
distance lighting 1.23
exterior 0.2
lighting:
exterior ..... 1.101 → 1.106
instrument panel 1.101
interior ..... 3.18, 5.13 – 5.14
see-me-home ..... 1.94 – 1.95
lights
adjustment 1.108
lights:
adjusting 1.108
brake lights 5.11
dipped beam headlights 1.78, 1.101, 5.10
direction indicators ..... 1.78, 1.99, 5.10 – 5.11
fog lights 1.78, 1.106, 5.11
hazard warning 1.99
indicator lights 5.12

main beam headlights 1.78, 1.104, 5.10
number plate lights 5.12
reversing lights 5.11
side lights 1.101, 5.11
locking 1.42
locking the doors ..... 1.22 → 1.36, 1.94 – 1.95
locking/unlocking the opening elements
doors 1.30
locking/unlocking the opening elements ..... 1.22 → 1.24, 1.31 → 1.35
luggage compartment 3.26
luggage compartment cover 3.26

M
maintenance:
bodywork ..... 4.10 → 4.12
interior trim ..... 4.13 – 4.14
mechanical ..... 4.2 – 4.3, 6.8 → 6.13
map
card emergency key ..... 1.33 → 1.35
deadlocking 1.30
engine not starting in hands-free mode ..... 1.33 → 1.35
hands-free ..... 1.28 – 1.29
locking/unlocking the opening elements 1.30
operating faults ..... 1.33 → 1.35
use ..... 1.22 → 1.24, 1.28 – 1.29
map reading lights 3.18
menu for customising the vehicle settings ..... 1.94 → 1.96
methods of restraint in addition to the seat belts ... 1.47 → 1.55
multifunction screen 2.26, 2.45, 2.50
multimedia (equipment) 3.15
multimedia equipment 1.94, 3.15, 5.19

N
navigation 3.15
navigation system 3.15

O
of warning sound
door/luggage compartment open reminder alarm 1.32
light reminder alarm 1.32
opening the doors ..... 1.31 → 1.36
opening/closing
doors ..... 1.25 → 1.29
opening/closing
doors and tailgate ..... 1.31 → 1.35
opening/closing
luggage compartment ..... 1.25 → 1.29
sunroof ..... 1.25 → 1.29
operating faults ..... 1.36, 1.49, 1.92, 2.11, 2.37, 2.42, 2.52, 5.26 → 5.30
overspeed warning ..... 2.49 → 2.52

P
paint
maintenance ..... 4.10 → 4.12
parking assistance: assisted parking ..... 2.74 → 2.78
parking brake ..... 2.8 → 2.11, 2.62
parking distance control ..... 1.95 – 1.96, 2.63 → 2.73
passenger safety 0.6
pedestrian detection ..... 2.23 → 2.29
pedestrian warning system 1.100
power-assisted steering 1.38
practical advice ..... 2.16 – 2.17
presentation of electric vehicle
important guidelines 1.7
pretensioners ..... 1.47 → 1.52
puncture 0.9

Q
QR Code 6.3

R
radio 3.15
range of the traction battery ..... 2.13 → 2.15
rear bench seat 3.24
rear parcel shelf 3.25
rear seats
functions 3.24
rear seats 1.44
rear view camera ..... 2.70 → 2.73
rear view mirrors 0.2, 1.107
remote control
card ..... 1.22 → 1.24
map ..... 1.22 → 1.24
replacement parts 6.7
reverse gear
selecting ..... 2.5 → 2.7
reversing sensor ..... 2.63 → 2.69

S
screen wash/wipe ..... 1.113 – 1.114
seat belt pretensioners
front seat belt ..... 1.47 → 1.52
seat belt pretensioners ..... 1.47 → 1.53
seat belts ..... 0.6, 1.41 → 1.52, 1.54 – 1.55, 1.79
seats 0.3
see-me-home lighting 1.104, 1.108
service sheets ..... 6.8 → 6.13
settings
configuration menu ..... 1.94 → 1.96
settings ..... 1.94 → 1.96
side protection devices 1.54
sign detection: overspeed warning ..... 2.49 → 2.52
signals and lights ..... 1.101 → 1.106, 1.108
speakers
location 5.19
speed control ..... 2.5 → 2.7
speed limiter ..... 1.79, 2.53 → 2.56
spoiler 3.27
starting ..... 2.2 → 2.4
starting the engine ..... 2.2 → 2.4
steering wheel
adjustment ..... 1.37 – 1.38
stopping the engine ..... 2.4, 2.8 → 2.11, 2.62
storage compartment ..... 3.19 → 3.21
storage compartments ..... 3.19 → 3.21
storage/organisation 0.3
sun visor 3.18

T
tailgate ..... 1.22 → 1.24, 3.27
tank
Brake fluid 4.6
Coolant 4.4
tanks and reservoirs:
windscreen washer 4.6
technical specifications 6.7
telephone 3.15
temperature regulation ..... 3.4 → 3.10
tool kit 5.2
towing
breakdown ..... 5.23 → 5.25
in the event of energy failure ..... 5.23 → 5.25
towing 0.9
towing hitch ..... 5.2, 5.23 → 5.25
towing rings ..... 1.59 → 1.61, 1.67 → 1.70, 3.28
traction battery ..... 1.2 → 1.6
traction battery charge ..... 1.8 → 1.19
traction control ..... 2.30 → 2.34
transporting children ..... 1.56 → 1.73
transporting objects
in the luggage compartment ..... 3.27 – 3.28
trip computer and warning system ..... 1.85 → 1.93, 1.95

tyre inflation kit.....5.3 → 5.5
tyre pressure.....0.7, 2.18 → 2.22, 4.9, 5.7
tyre pressure monitor.....2.18 → 2.22
tyre pressures.....4.9
tyres.....0.2, 2.18 → 2.22, 4.9, 5.6 → 5.9

U
unlocking the doors .....1.22 → 1.24, 1.33 → 1.36

V
vehicle detection.....2.23 → 2.29
vehicle identification 0.7
vehicle identification number (VIN).....0.7
vehicle identification plates.....0.7
vehicle range .....2.13 → 2.17
ventilation .....3.4 → 3.10

W
warning
    pedestrian sound warning.....1.6
warning buzzer .....1.31 – 1.32, 1.99, 1.104
warning lights.....1.78 → 1.81, 1.85 – 1.86
washing .....4.10 → 4.12
weights 6.5
welcome aboard your vehicle 0.1
wheels (safety) .....5.6 → 5.9
windows.....0.2
windscreen washer.....1.109 → 1.114, 4.6
windscreen washer/wiper .....1.94 – 1.95, 1.109 → 1.112
wiper blades .....0.9, 5.21 – 5.22, 5.22
wipers
    blades .....5.21 – 5.22, 5.22
wipers .....1.109 → 1.114

RENAULT S.A.S. SOCIÉTÉ PAR ACTIONS SIMPLIFIÉE AU CAPITAL DE 533 941 113 € / 122-122 BIS, AVENUE DU GENERAL LECLERC
92100 BOULOGNE-BILLANCOURT R.C.S. NANTERRE 780 129 987 — SIRET 780 129 987 03591 / renaultgroup.com

NU 1304-9 – 99 91 018 00S – 07/2023 – Edition anglaise

FR

9991018 00S

5H