2022 ALTIMA SEDAN

OWNER'S MANUAL
and MAINTENANCE INFORMATION

For your safety, read carefully and keep in this vehicle.

CALIFORNIA PROPOSITION 65 WARNING

⚠WARNING

Operating, servicing and maintaining a passenger vehicle or off-highway motor vehicle can expose you to chemicals including engine exhaust, carbon monoxide, phthalates, and lead, which are known to the State of California to cause cancer and birth defects or other reproductive harm. To minimize exposure, avoid breathing exhaust, do not idle the engine except as necessary, service your vehicle in a well-ventilated area and wear gloves or wash your hands frequently when servicing your vehicle. For more information go to www.P65Warnings.ca.gov/passenger-vehicle.

FOREWORD

This manual was prepared to help you understand the operation and maintenance of your vehicle so that you may enjoy many miles (kilometers) of driving pleasure. Please read through this manual before operating your vehicle.

A separate Warranty Information Booklet explains details about the warranties covering your vehicle. The "Maintenance and schedules" section of this manual explains details about maintaining and servicing your vehicle. Additionally, a separate Customer Care/Lemon Law Booklet (U.S. only) will explain how to resolve any concerns you may have with your vehicle, and clarify your rights under your state's lemon law.

When you require any service or have any questions, a NISSAN dealer will be glad to assist you with the extensive resources available to them.

In addition to factory-installed options, your vehicle may also be equipped with additional accessories installed prior to delivery. It is recommended that you visit a NISSAN dealer for details concerning the particular accessories with which your vehicle is equipped. It is important that you familiarize yourself with all disclosures, warnings, cautions and instructions concerning proper use of such accessories prior to operating the vehicle and/or accessory. It is recommended that you visit a NISSAN dealer for details concerning the particular accessories with which your vehicle is equipped.

READ FIRST—THEN DRIVE SAFELY

Before driving your vehicle, please read this Owner's Manual carefully. This will ensure familiarity with controls and maintenance requirements assisting you in the safe operation of your vehicle.

⚠ WARNING

IMPORTANT SAFETY INFORMATION REMINDERS!
Follow these important driving rules to help ensure a safe and comfortable trip for you and your passengers!

- **NEVER drive under the influence of alcohol or drugs.**
- **ALWAYS observe posted speed limits and never drive too fast for conditions.**
- **ALWAYS give your full attention to driving and avoid using vehicle features or taking other actions that could distract you.**
- **ALWAYS use your seat belts and appropriate child restraint systems. Preteen children should be seated in the rear seat.**
- **ALWAYS provide information about the proper use of vehicle safety features to all occupants of the vehicle.**
- **ALWAYS review this Owner's Manual for important safety information.**

MODIFICATION OF YOUR VEHICLE

This vehicle should not be modified. Modification could affect its performance, safety, emissions or durability and may even violate governmental regulations. In addition, damage or performance problems resulting from modifications may not be covered under NISSAN warranties.

⚠ WARNING

Installing an aftermarket On-Board Diagnostic (OBD) plug-in device that uses the port during normal driving, for example remote insurance company monitoring, remote vehicle diagnostics, telematics or engine reprogramming, may cause interference or damage to vehicle systems. We do not recommend or endorse the use of any aftermarket OBD plug-in devices, unless specifically approved by NISSAN. The vehicle warranty may not cover damage caused by any aftermarket plug-in device.

This manual includes information for all features and equipment available on this model. Features and equipment in your vehicle may vary depending on model, trim level, options selected, order, date of production, region or availability. Therefore, you may find information about features or equipment that are not included or installed on your vehicle.

All information, specifications and illustrations in this manual are those in effect at the time of printing. NISSAN reserves the right to change specifications, performance, design or component suppliers without notice and without obligation. From time to time, NISSAN may update or revise this manual to provide Owners with the most accurate information currently available. Please carefully read and retain with this manual all revision updates sent to you by NISSAN to ensure you have access to accurate and up-to-date information regarding your vehicle. Current versions of vehicle Owner's Manuals and any updates can also be found in the Owner section of the NISSAN website at **https://owners.nissanusa.com/nowners/navigation/manualsGuide**. If you have questions concerning any information in your Owner's Manual, contact NISSAN Consumer Affairs. For contact information, refer to the NISSAN CUSTOMER CARE PROGRAM page in this Owner's Manual.

IMPORTANT INFORMATION ABOUT THIS MANUAL

You will see various symbols in this manual. They are used in the following ways:

⚠ WARNING

This is used to indicate the presence of a hazard that could cause death or serious personal injury. To avoid or reduce the risk, the procedures must be followed precisely.

⚠ CAUTION

This is used to indicate the presence of a hazard that could cause minor or moderate personal injury or damage to your vehicle. To avoid or reduce the risk, the procedures must be followed carefully.

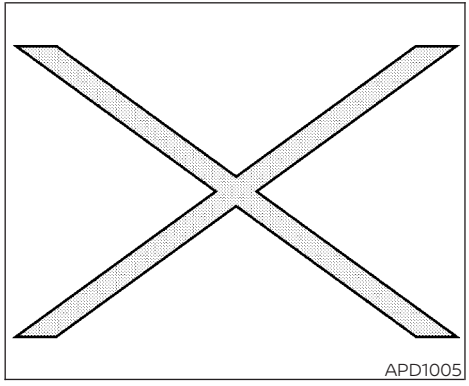

If you see this symbol, it means **"Do not do this"** or **"Do not let this happen."**

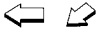

If you see a symbol similar to these in an illustration, it means the arrow points to the front of the vehicle.

Arrows in an illustration that are similar to these indicate movement or action.

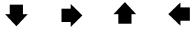

Arrows in an illustration that are similar to these call attention to an item in the illustration.

CALIFORNIA PERCHLORATE ADVISORY

Some vehicle parts, such as lithium batteries, may contain perchlorate material. The following advisory is provided: "Perchlorate Material – special handling may apply. For additional information, refer to www.dtsc.ca.gov/hazardouswaste/perchlorate/".

SiriusXM® services require a subscription after trial period and are sold separately or as a package. The satellite service is available only in the 48 contiguous USA and DC. SiriusXM® satellite service is also available in Canada; see www.siriusxm.ca.

© 2021 NISSAN NORTH AMERICA, INC.

All rights reserved. No part of this Owner's Manual may be reproduced or stored in a retrieval system, or transmitted in any form, or by any means, electronic, mechanical, photocopying, recording or otherwise, without the prior written permission of Nissan North America, Inc.

NISSAN CUSTOMER CARE PROGRAM

NISSAN CARES . . .

Both NISSAN and your NISSAN dealer are dedicated to serving all your automotive needs. Your satisfaction with your vehicle and your NISSAN dealer are our primary concerns. Your NISSAN dealer is always available to assist you with all your automobile sales and service needs.

However, if there is something that your NISSAN dealer cannot assist you with or you would like to provide NISSAN directly with comments or questions, please contact the NISSAN Consumer Affairs Department using our toll-free number:

For U.S. customers
1-800-NISSAN-1
(1-800-647-7261)

For Canadian customers
1-800-387-0122

The Consumer Affairs Department will ask for the following information:

- Your name, address, and telephone number
- Vehicle identification number (attached to the top of the instrument panel on the driver's side)
- Date of purchase
- Current odometer reading
- Your NISSAN dealer's name
- Your comments or questions

OR

You can write to NISSAN with the information at:

For U.S. customers
Nissan North America, Inc.
Consumer Affairs Department
P.O. Box 685003
Franklin, TN 37068-5003
or via e-mail at:
nnaconsumeraffairs@nissan-usa.com

For Canadian customers
Nissan Canada Inc.
5290 Orbitor Drive
Mississauga, Ontario L4W 4Z5
or via e-mail at:
information.centre@nissancanada.com

If you prefer, visit us at:
www.nissanusa.com (for U.S. customers)
or
www.nissan.ca (for Canadian customers)

We appreciate your interest in NISSAN and thank you for buying a quality NISSAN vehicle.

Table of contents

Illustrated table of contents	0
Safety-Seats, seat belts and supplemental restraint system	1
Instruments and controls	2
Pre-driving checks and adjustments	3
Monitor, climate, audio, phone and voice recognition systems	4
Starting and driving	5
In case of emergency	6
Appearance and care	7
Do-it-yourself	8
Maintenance and schedules	9
Technical and consumer information	10
Index	11

0 Illustrated table of contents

Air bags, seat belts and child restraints 0-2
Exterior front 0-3
Exterior rear 0-4
Passenger compartment 0-5
Instrument panel 0-6
Engine compartment check locations 0-8
Warning/Indicator lights 0-10

AIR BAGS, SEAT BELTS AND CHILD RESTRAINTS

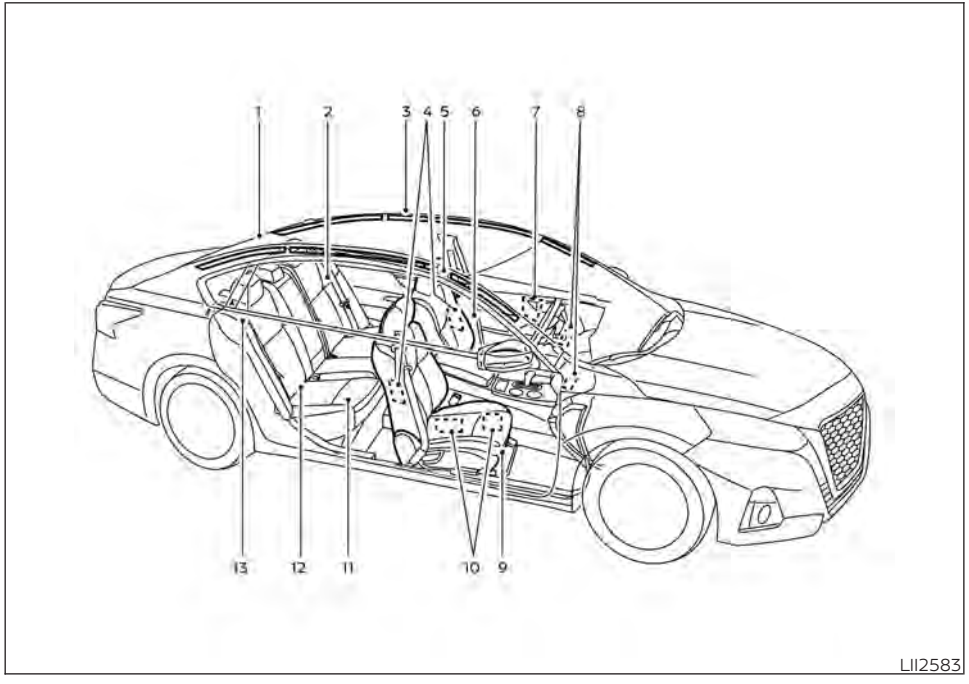

1. Top tether strap anchor (P. 1-23)
2. Rear seat belts with pretensioner(s) for outboard seating (P. 1-12)
3. Roof-mounted curtain side-impact and rollover supplemental air bag (P. 1-47)
4. Front seat-mounted side-impact supplemental air bag (P. 1-47)
5. Head restraints/headrests (P. 1-8)
6. Front seat belt with pretensioner(s) and shoulder height adjuster (P. 1-12, 1-47)
7. Side-impact pressure sensor (driver's side shown; passenger's side similar) (P. 1-47)
8. Supplemental air bags (P. 1-47)
9. Front seats (P. 1-2)
10. Occupant classification sensor (weight sensor) (P. 1-47)
11. Rear seats (P. 1-2)
12. LATCH (Lower Anchors and Tethers for CHildren) system (P. 1-23)
13. Rear outboard seat-mounted side impact supplemental air bag (P. 1-47)

Refer to the page number indicated in parentheses for operating details.

EXTERIOR FRONT

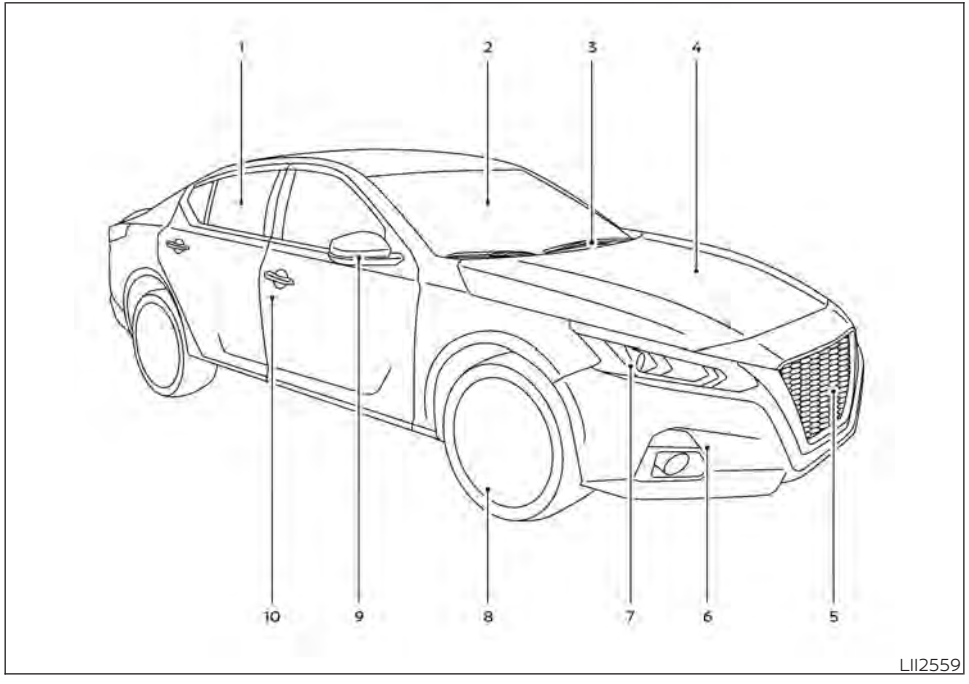

1. Power windows (P. 2-75)
2. Windshield (P. 8-19)
3. Wiper and washer switch (P. 2-55)
4. Engine hood (P. 3-22)
5. Front view camera (if so equipped) (P. 4-16)
   Radar sensor (P. 5-135 or 5-147)
6. Fog light switch (if so equipped) (P. 2-63)
   Turn signal switch (P. 2-63)
7. Headlight switch (P. 2-57)
   LED Daytime Running Lights (DRL) system (if so equipped) (P. 2-62)
   Replacing bulbs (P. 8-25)
8. Tire pressure (P. 8-29)
   Flat tire (P. 6-3)
   Tire chains (P. 8-37)
9. Mirrors (P. 3-29)
   Side view camera (if so equipped) (P. 4-16)
10. Door locks (P. 3-4)
    NISSAN Intelligent Key® (P. 3-7)
    Keys (P. 3-2)

Refer to the page number indicated in parentheses for operating details.

EXTERIOR REAR

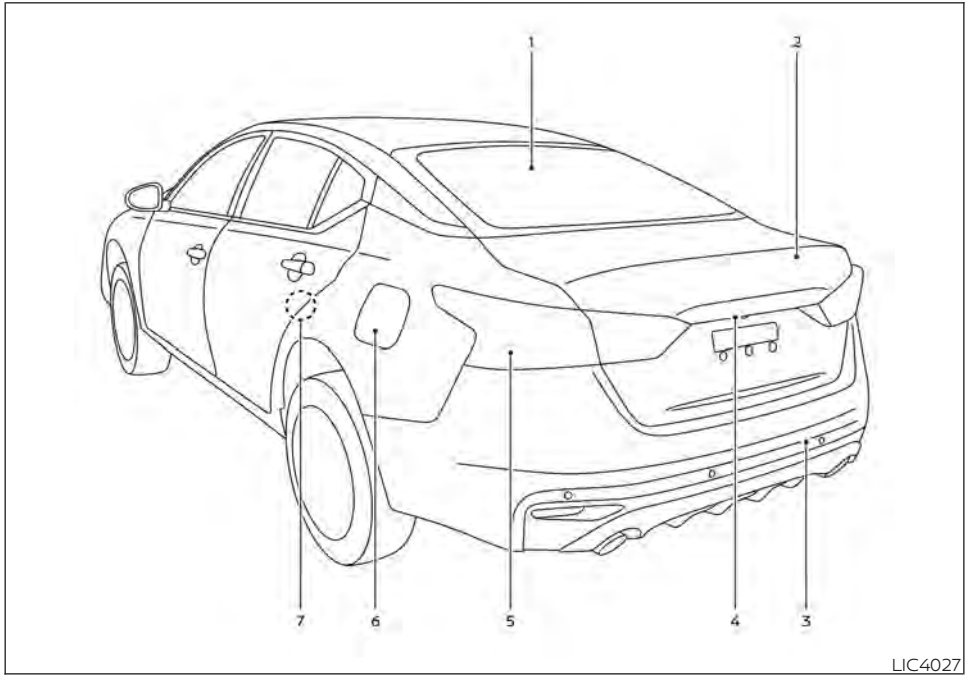

1. Rear window and outside mirror (if so equipped) defroster switch (P. 2-56)
2. Trunk lid (P. 3-22)
3. Sonar sensors (if so equipped) (P. 5-179)
4. Rearview camera (P. 4-8)
5. Replacing bulbs (P. 8-25)
6. Fuel-filler cap (P. 3-25)
   Fuel recommendation (P. 10-2)
   Fuel-filler door (P. 3-25)
7. Child safety rear door lock (P. 3-7)

Refer to the page number indicated in parentheses for operating details.

PASSENGER COMPARTMENT

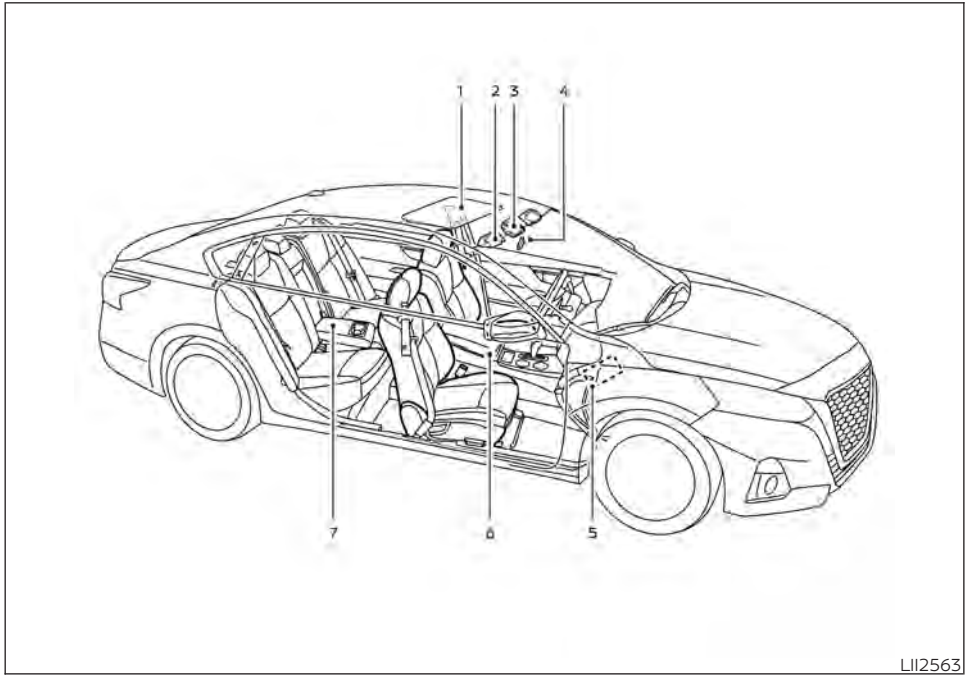

1. Power moonroof (if so equipped) (P. 2-77)
2. Sun visors (P. 3-28)
3. Interior lights (P. 2-79)
4. HomeLink® Universal Transceiver (if so equipped) (P. 2-81)
   Rearview mirror (P. 3-29)
5. Glove box (P. 2-71)
6. Cup holders (P. 2-73)
   Console box (P. 2-71)
7. Rear armrest (P. 1-7)
   Cup holders (P. 2-73)

Refer to the page number indicated in parentheses for operating details.

INSTRUMENT PANEL

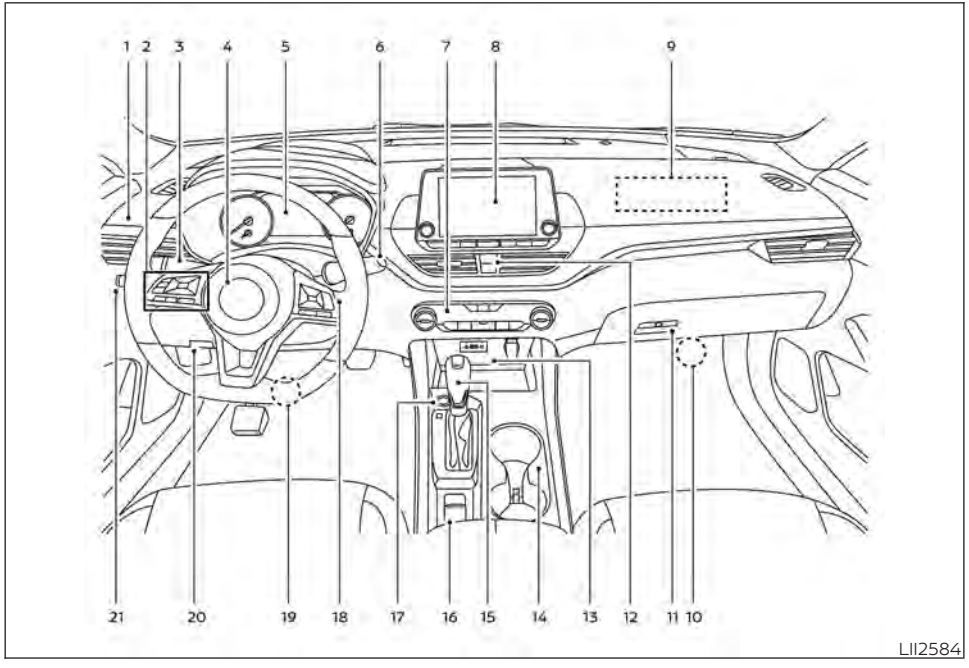

1. Vents (P. 4-31)
2. Steering wheel switches for audio control*
   Vehicle information display controls (P. 2-18, 2-34)
3. Headlight/fog light (if so equipped)/ turn signal switch (P. 2-57)
   Paddle shifters (if so equipped) (P. 5-18)
4. Driver supplemental air bag (P. 1-47)
   Horn (P. 2-64)
5. Meters and gauges (P. 2-4)
   Warning and indicator lights (P. 2-9)
   Vehicle information display (P. 2-18, 2-34)
6. Wiper and washer switch (P. 2-55)
7. Heater and air conditioner (P. 4-33, 4-40)
   Heated seat switches (if so equipped) (P. 2-64)
   Heated steering wheel switch (if so equipped) (P. 2-65)
8. Navigation system* (if so equipped)
   Audio system*
9. Front passenger supplemental air bag (P. 1-47)
10. Front passenger supplemental knee airbag (P. 1-47)
11.. Glove box (P. 2-71)
12. Front passenger air bag status light (P. 1-57)
    Hazard warning flasher switch (P. 6-2)
13. Power outlet (P. 2-69)
    USB connection port (if so equipped) (P. 2-70, 4-67)
    Aux jack*
14. Cup holders (P. 2-73)
15 Shift lever (P. 5-18)

16. Electronic parking brake switch (if so equipped) (P. 5-25)
    Automatic brake hold switch (if so equipped) (P. 5-27)
17. Push-button ignition switch (P. 5-13)
18. Cruise control switches (if so equipped) (P. 5-68)
    Intelligent Cruise Control (ICC) switches (if so equipped) (P. 5-71)
    Bluetooth® Hands-free Phone System*
    ProPILOT Assist Switch (if so equipped) (P. 5-94)
19. Driver supplemental knee airbag (P. 1-47)
20. Hood release (P. 3-22)
    Fuel-filler door release (P. 3-25)
    Tilt/telescopic steering wheel controls (P. 3-27)
21. Trip computer reset switch (P. 2-4)
    Instrument brightness control (P. 2-62)
    Steering assist switch (for vehicles with ProPILOT Assist) (if so equipped) (P. 2-66)
    Trunk opener (P. 3-22)

*: For additional information, refer to the separate NissanConnect® Owner's Manual.

Refer to the page number indicated in parentheses for operating details.

ENGINE COMPARTMENT CHECK LOCATIONS

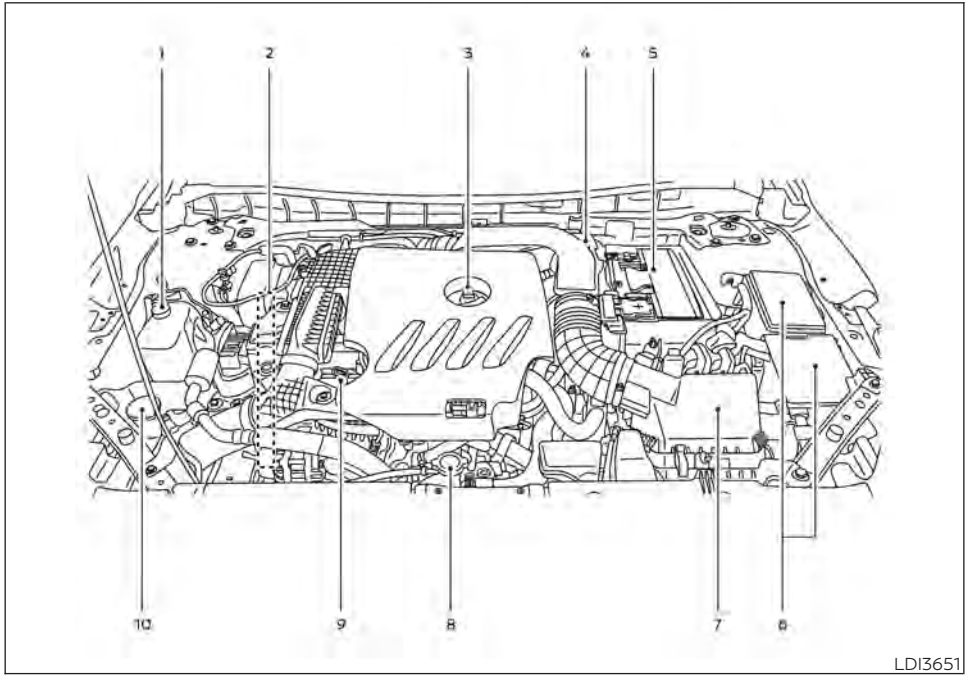

2.0L 4 cylinder (KR20DDET engine model)

1. Engine coolant reservoir (P. 8-5)
2. Drive belt location (P. 8-16)
3. Engine oil filler cap (P. 8-7)
4. Brake fluid reservoir (P. 8-12)
5. Battery (P. 8-14)
6. Fuse/Fusible link box (P. 8-21)
7. Air cleaner (P. 8-18)
8. Radiator cap (P. 8-5)
9. Engine oil dipstick (P. 8-7)
10. Windshield-washer fluid reservoir (P. 8-13)

Refer to the page number indicated in parentheses for operating details.

NOTE:

Your vehicle may not be equipped with an engine cover.

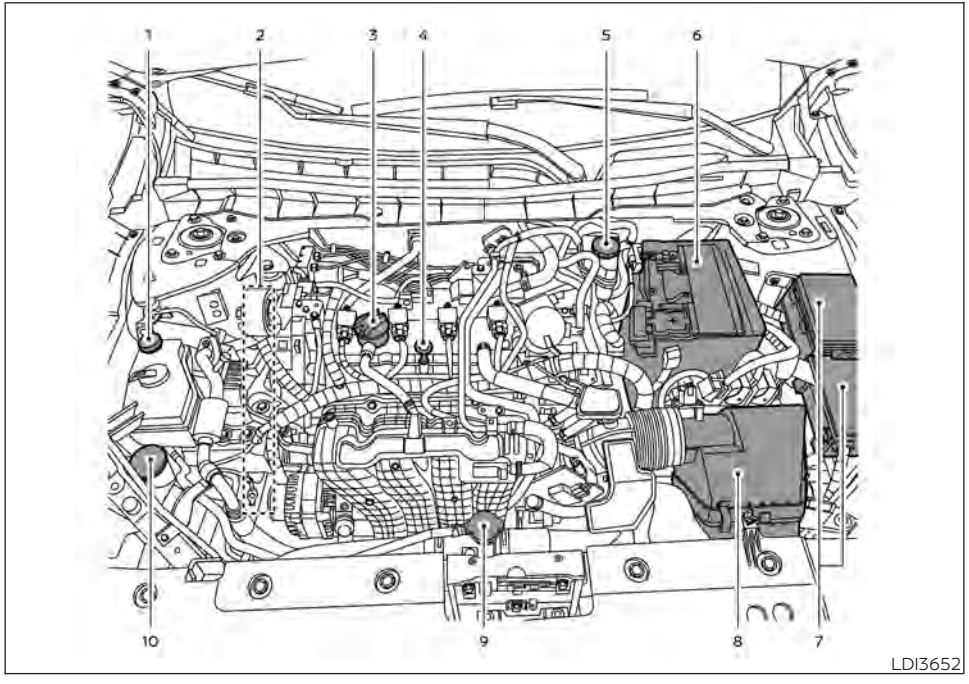

2.5L 4 cylinder (PR25DD engine model)

1. Engine coolant reservoir (P. 8-5)
2. Drive belt location (P. 8-16)
3. Engine oil filler cap (P. 8-7)
4. Engine oil dipstick (P. 8-7)
5. Brake fluid reservoir (P. 8-12)
6. Battery (P. 8-14)
7. Fuse/Fusible link box (P. 8-21)
8. Air cleaner (P. 8-18)
9. Radiator cap (P. 8-5)
10. Windshield-washer fluid reservoir (P. 8-13)

Refer to the page number indicated in parentheses for operating details.

NOTE:

Your vehicle may not be equipped with an engine cover.

WARNING/INDICATOR LIGHTS

Warning/ Indicator light (red)	Name	Page
BRAKE or	Brake warning light	2-10
	Charge warning light	2-11
PARK or	Electronic parking brake indicator light (if so equipped)	2-11
	Engine oil pressure warning light	2-11

Warning/ Indicator light (red)	Name	Page
	Master warning light	2-11
	Seat belt warning light and chime	2-12
	Security indicator light	2-12
	Supplemental air bag warning light	2-12

Warning/ Indicator light (yellow)	Name	Page
ABS or	Anti-lock Braking System (ABS) warning light	2-12
	Automatic Emergency Braking (AEB) with Pedestrian Detection system warning light	2-13
or	Electronic parking brake warning light (if so equipped)	2-13

Warning/ Indicator light (yellow)	Name	Page
	Front passenger air bag status light	2-13
	Low tire pressure warning light	2-13
	Malfunction Indicator Light (MIL)	2-15
	Master warning light	2-15
	Power steering warning light	2-16

Warning/ Indicator light (yellow)	Name	Page
	Rear Automatic Braking (RAB) warning light (if so equipped)	2-16
	Slip indicator light	2-16
OFF	Vehicle Dynamic Control (VDC) OFF indicator light	2-17

Warning/ Indicator light (other)	Name	Page
HOLD	Automatic brake hold indicator light (white/ green) (if so equipped)	2-17

Warning/ Indicator light (other)	Name	Page
	Front fog light indicator light (green) (if so equipped)	2-17
	High Beam Assist indicator light (green)	2-17
	High beam indicator light (blue)	2-17
	Side light and headlight indicator light (green)	2-17
	Turn signal/ hazard indicator lights (green)	2-18

MEMO

1 Safety-Seats, seat belts and supplemental restraint system

Seats 1-2
Front manual seat adjustment (if so equipped) 1-3
Front power seat adjustment (if so equipped) 1-4
Folding rear seat 1-6
Center armrest 1-7
Head restraints/headrests 1-8
Adjustable head restraint/headrest components 1-9
Non-adjustable head restraint/headrest components 1-9
Remove 1-9
Install 1-10
Adjust 1-10
Seat belts 1-12
Precautions on seat belt usage 1-12
Seat belt warning light and chime 1-14
Pregnant women 1-15
Injured persons 1-15
Three-point type seat belt with retractor 1-15
Seat belt extenders 1-20
Seat belt maintenance 1-20
Child safety 1-21
Infants 1-21
Small children 1-22
Larger children 1-22
Child restraints 1-23
Precautions on child restraints 1-23
LATCH (Lower Anchors and Tethers for CHildren) system 1-25
Rear-facing child restraint installation using LATCH 1-29
Rear-facing child restraint installation using the seat belts 1-31
Forward-facing child restraint installation using LATCH 1-34
Forward-facing child restraint installation using the seat belts 1-38
Booster seats 1-43
Supplemental Restraint System (SRS) 1-47
Precautions on SRS 1-47
Supplemental air bag warning labels 1-67
Supplemental air bag warning light 1-67

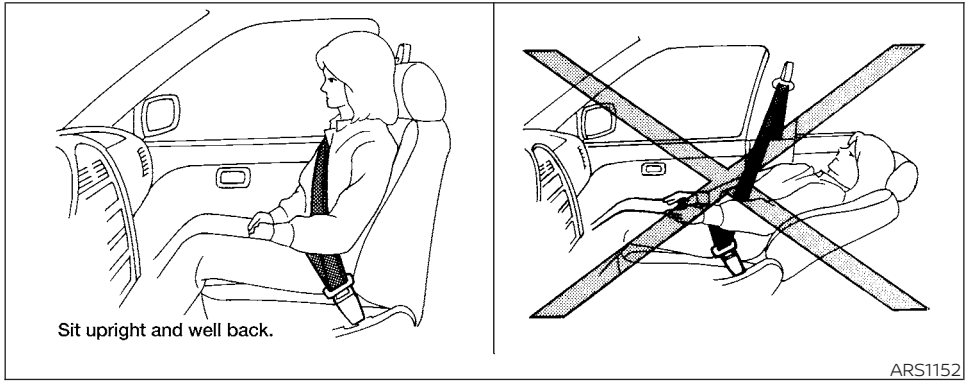

⚠ WARNING

- **Do not ride in a moving vehicle when the seatback is reclined. This can be dangerous. The shoulder belt will not be against your body. In an accident, you could be thrown into it and receive neck or other serious injuries. You could also slide under the lap belt and receive serious internal injuries.**
- **For the most effective protection when the vehicle is in motion, the seat should be upright. Always sit well back and upright in the seat with both feet on the floor and adjust the seat properly. For additional information, see "Precautions on seat belt usage" (P. 1-12).**
- **After adjustment, gently rock in the seat to make sure it is securely locked.**
- **Do not leave children unattended inside the vehicle. They could unknowingly activate switches or controls or make the vehicle move. Unattended children could become involved in serious accidents.**
- **To help avoid risk of injury or death through unintended operation of the vehicle and/or its systems, do not leave children, people who require the assistance of others or pets unattended in your vehicle. Additionally, the temperature inside a closed vehicle on a warm day can quickly become high enough to cause a significant risk of injury or death to people and pets.**
- **Do not adjust the driver's seat while driving so full attention may be given to vehicle operation. The seat may move suddenly and could cause loss of control of the vehicle.**
- **The seatback should not be reclined any more than needed for comfort. Seat belts are most effective when the passenger sits well back and straight up in the seat. If the seatback is reclined, the risk of sliding under the lap belt and being injured is increased.**

⚠ CAUTION

When adjusting the seat positions, be sure not to contact any moving parts to avoid possible injuries and/or damage.

FRONT MANUAL SEAT ADJUSTMENT (if so equipped)

Your vehicle seats can be adjusted manually. For additional information about adjusting the seats, refer to the steps outlined in this section.

⚠ WARNING

Before driving the vehicle, return the seatback to an upright seating position after manually releasing it. Also, make sure the seat is locked in place. Failure to do so may cause the seat to move in a collision or sudden stop. This may result in damage to the seat or personal injury.

LRS3029

Forward and backward

Pull the center of the bar up and hold it while you slide the seat forward or backward to the desired position. Release the bar to lock the seat in position.

LRS3030

Reclining

To recline the seatback, pull the lever up and lean back. To bring the seatback forward, pull the lever up and lean your body forward. Release the lever to lock the seatback in position.

The reclining feature allows adjustment of the seatback for occupants of different sizes for added comfort and to help obtain proper seat belt fit. For additional information, see "Precautions on seat belt usage" (P. 1-12). Also, the seatback can be reclined to allow occupants to rest when the vehicle is stopped and the shift lever is in the P (Park) position.

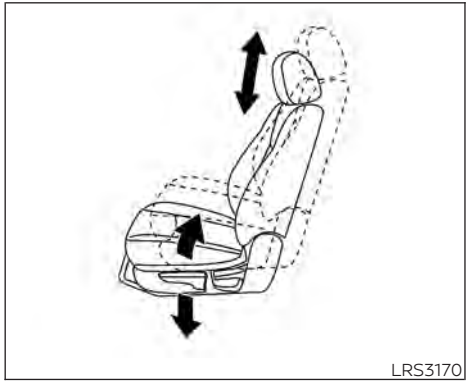

Seat lifter (driver's seat)

Pull up or push down the adjusting lever to adjust the seat height until the desired position is achieved.

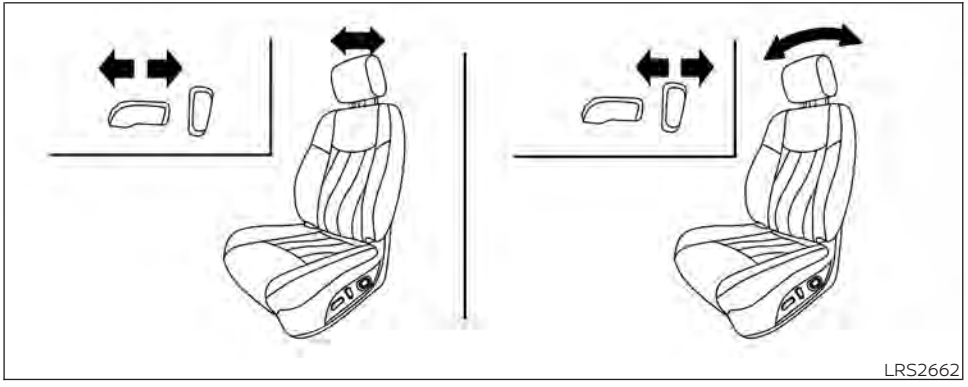

FRONT POWER SEAT ADJUSTMENT (if so equipped)

Operating tips

- The power seat motor has an auto-reset overload protection circuit. If the motor stops during operation, wait 30 seconds then reactivate the switch.
- Do not operate the power seat switch for a long period of time when the engine is off. This will discharge the battery.

For additional information, see "Memory Seat" (P. 3-31).

Forward and backward

Moving the switch as shown will slide the seat forward or backward to the desired position.

Reclining

Move the recline switch as shown until the desired angle is obtained.

The reclining feature allows adjustment of the seatback for occupants of different sizes for added comfort and to help obtain proper seat belt fit. For additional information, see "Precautions on seat belt usage" (P. 1-12). Also, the seatback can be reclined to allow occupants to rest when the vehicle is stopped and the shift lever is in the P (Park) position.

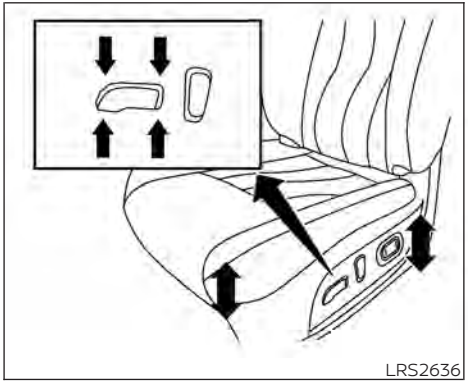

Seat lifter (driver's seat)

Move the switch as shown to adjust the angle and height of the seat cushion.

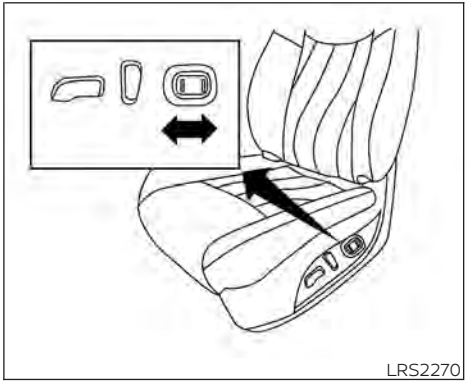

Lumbar support (if so equipped for driver's seat)

The lumbar support feature provides adjustable lower back support to the driver. Push the switch as shown to adjust the seat lumbar area.

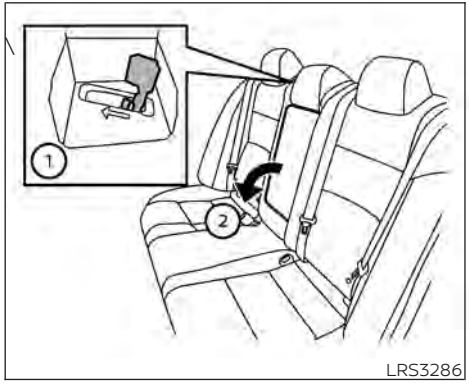

FOLDING REAR SEAT

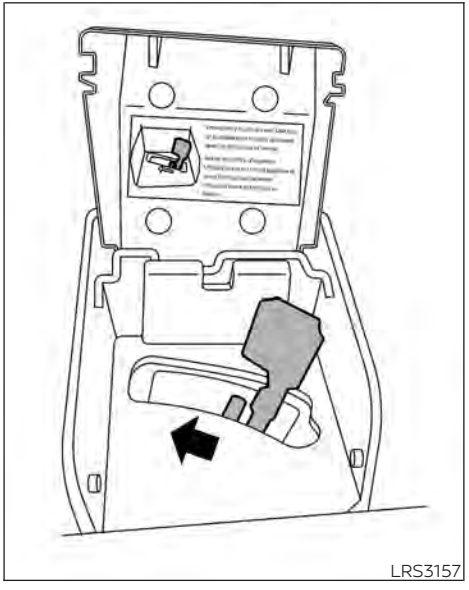

Interior trunk access

The trunk can be accessed from the driver side and passenger side of the rear seat for loading and unloading, as shown.

1. Move the front passenger seat to the most forward position.
2. Open the access cover on the rear parcel shelf.
3. Insert a key or another suitable tool (such as a pen or a screw driver) into the slot, then slide the recessed lever in the direction of the arrow ①.
4. Fold down the passenger's side seatback ②.

NOTE:

To access the trunk in case of a dead battery, use a key or another suitable tool (such as a pen or screw driver), to slide recessed lever in the direction of the arrow.

⚠WARNING

- **Never allow anyone to ride in the cargo area or on the rear seat when it is in the fold-down position. Use of these areas by passengers without proper restraints could result in serious injury or death in an accident or sudden stop.**

- **Properly secure all cargo with ropes or straps to help prevent it from sliding or shifting. Do not place cargo higher than the seatbacks. In a sudden stop or collision, unsecured cargo could cause personal injury.**
- **When returning the seatbacks to the upright position, be certain they are completely secured in the latched position. If they are not completely secured, passengers may be injured in an accident or sudden stop.**
- **Closely supervise children when they are around cars to prevent them from playing and becoming locked in the trunk where they could be seriously injured. Keep the car locked, with the rear seatback and trunk lid securely latched when not in use, and prevent children's access to car keys.**

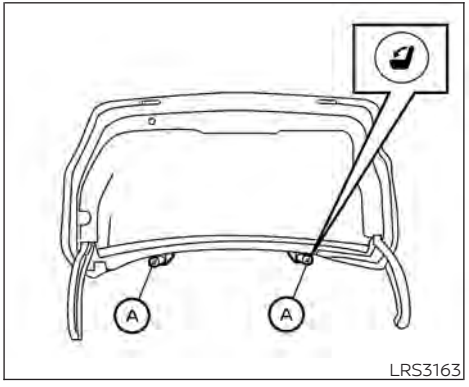

LRS3163

To fold down either side of the rear seat, open the trunk and pull on the knob on that side Ⓐ .

LRS3287

CENTER ARMREST

Pull the armrest down as shown.

⚠ WARNING

Head restraints/headrests supplement the other vehicle safety systems. They may provide additional protection against injury in certain rear end collisions. Adjustable head restraints/headrests must be adjusted properly, as specified in this section. Check the adjustment after someone else uses the seat. Do not attach anything to the head restraint/headrest stalks or remove the head restraint/headrest. Do not use the seat if the head restraint/headrest has been removed. If the head restraint/headrest was removed, reinstall and properly adjust the head restraint/headrest before an occupant uses the seating position. Failure to follow these instructions can reduce the effectiveness of the head restraints/headrests. This may increase the risk of serious injury or death in a collision.

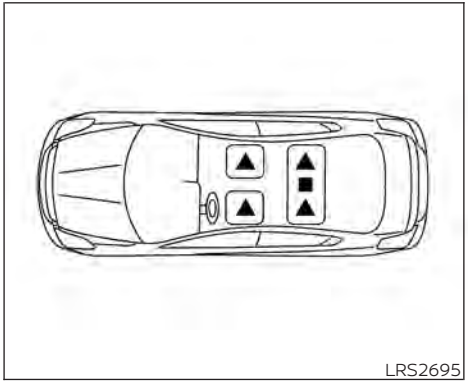

The illustration shows the seating positions equipped with head restraints/headrests.

▲ Indicates the seating position is equipped with a head restraint.

■ Indicates the seating position is equipped with a headrest.

+ Indicates the seating position is not equipped with a head restraint or headrest (if applicable).

- Your vehicle is equipped with a head restraint/headrest that may be integrated, adjustable or non-adjustable.
- Adjustable head restraints/headrests have multiple notches along the stalk(s) to lock them in a desired adjustment position.
- The non-adjustable head restraints/headrests have a single locking notch to secure them to the seat frame.
- Proper Adjustment:
  - For the adjustable type, align the head restraint/headrest so the center of your ear is approximately level with the center of the head restraint/headrest.
  - If your ear position is still higher than the recommended alignment, place the head restraint/headrest at the highest position.
- If the head restraint/headrest has been removed, ensure that it is reinstalled and locked in place before riding in that designated seating position.

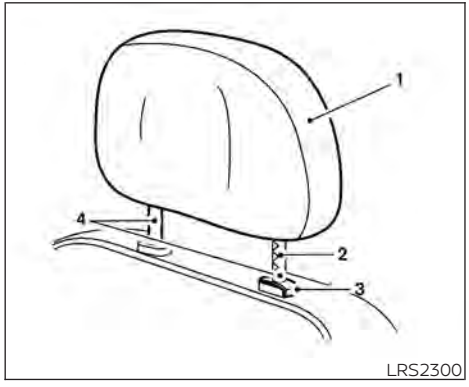

ADJUSTABLE HEAD RESTRAINT/ HEADREST COMPONENTS

1. Removable head restraint/headrest
2. Multiple notches
3. Lock knob
4. Stalks

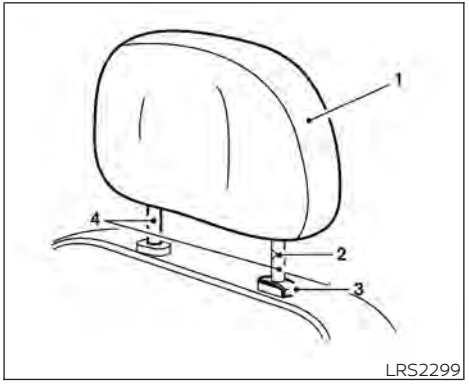

NON-ADJUSTABLE HEAD RESTRAINT/HEADREST COMPONENTS

1. Removable head restraint/headrest
2. Single notch
3. Lock knob
4. Stalks

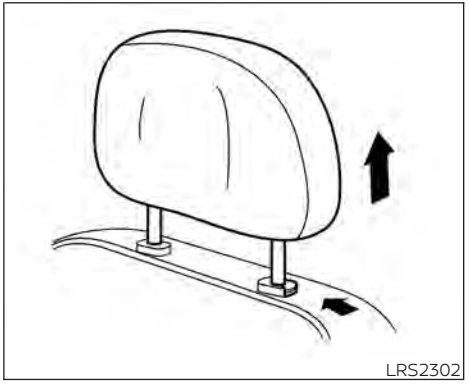

REMOVE

Use the following procedure to remove the head restraint/headrest:

1. Pull the head restraint/headrest up to the highest position.
2. Push and hold the lock knob.
3. Remove the head restraint/headrest from the seat.
4. Store the head restraint/headrest properly in a secure place so it is not loose in the vehicle.

5. Reinstall and properly adjust the head restraint/headrest before an occupant uses the seating position.

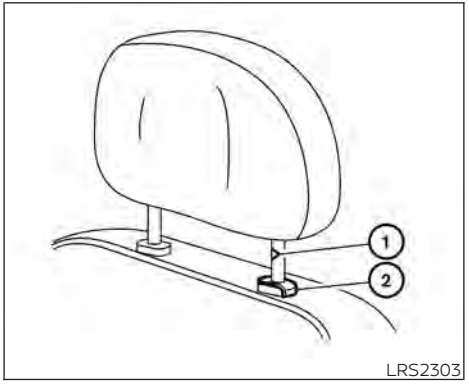

LRS2303

INSTALL

1. Align the head restraint/headrest stalks with the holes in the seat. Make sure that the head restraint/headrest is facing the correct direction. The stalk with the notch (notches) ① must be installed in the hole with the lock knob ②.
2. Push and hold the lock knob and push the head restraint/headrest down.
3. Properly adjust the head restraint/headrest before an occupant uses the seating position.

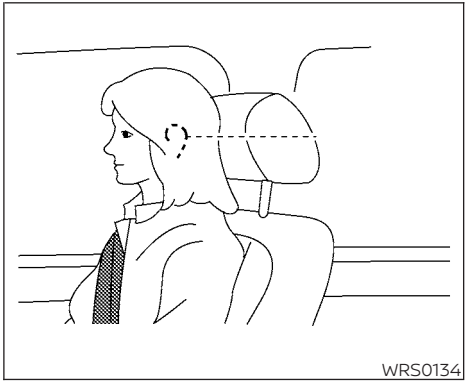
WRS0134

ADJUST

For adjustable head restraint/headrest

Adjust the head restraint/headrest so the center is level with the center of your ears. If your ear position is still higher than the recommended alignment, place the head restraint/headrest at the highest position.

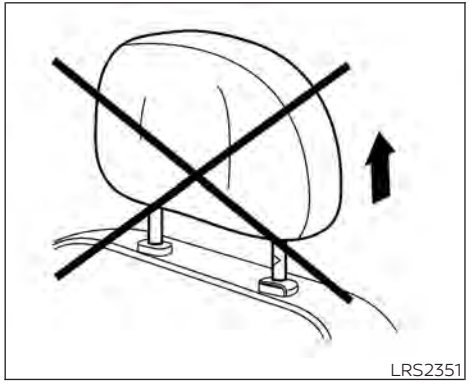

For non-adjustable head restraint/headrest

Make sure the head restraint/headrest is positioned so the lock knob is engaged in the notch before riding in that designated seating position.

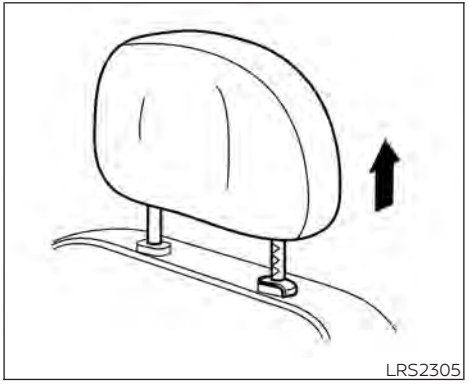

Raise

To raise the head restraint/headrest, pull it up.

Make sure the head restraint/headrest is positioned so the lock knob is engaged in the notch before riding in that designated seating position.

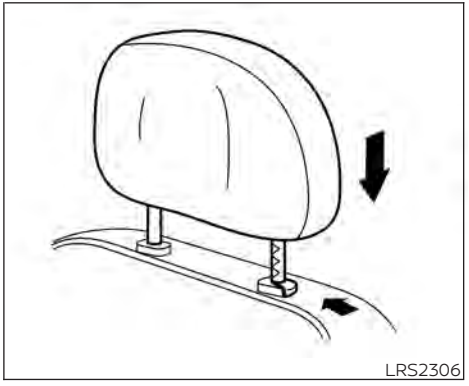

Lower

To lower, push and hold the lock knob and push the head restraint/headrest down.

Make sure the head restraint/headrest is positioned so the lock knob is engaged in the notch before riding in that designated seating position.

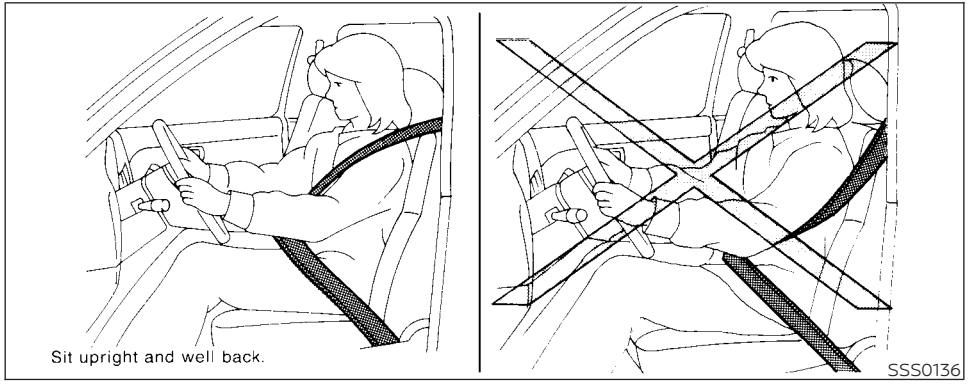

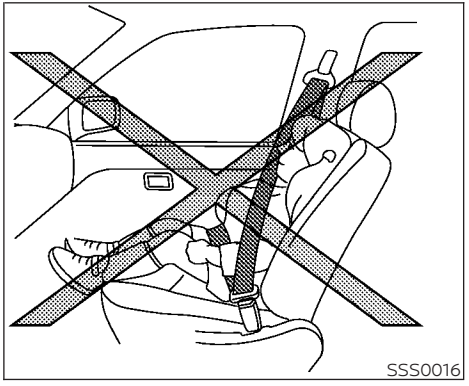

PRECAUTIONS ON SEAT BELT USAGE

If you are wearing your seat belt properly adjusted and you are sitting upright and well back in your seat with both feet on the floor, your chances of being injured or killed in a collision and/or the severity of injury may be greatly reduced. NISSAN strongly encourages you and all of your passengers to buckle up every time you drive, even if your seating position includes a supplemental air bag.

Most U.S. states and Canadian provinces or territories specify that seat belts be worn at all times when a vehicle is being driven.

WARNING

- **Every person who drives or rides in this vehicle should use a seat belt at all times. Children should be in the rear seats and in an appropriate restraint.**

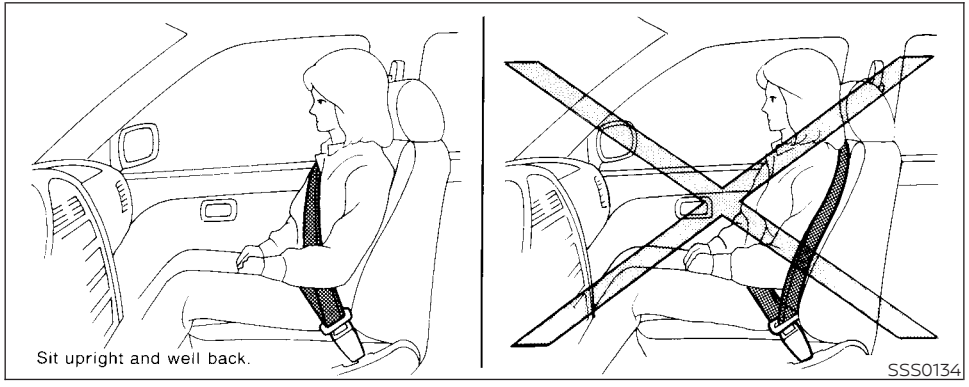

⚠ WARNING

- **The seat belt should be properly adjusted to a snug fit. Failure to do so may reduce the effectiveness of the entire restraint system and increase the chance or severity of injury in an accident. Serious injury or death can occur if the seat belt is not worn properly.**

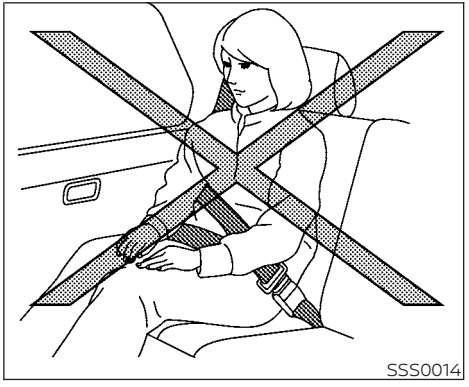

⚠ WARNING

- **Always route the shoulder belt over your shoulder and across your chest. Never put the belt behind your back, under your arm or across your neck. The belt should be away from your face and neck, but not falling off your shoulder.**
- **Position the lap belt as low and snug as possible AROUND THE HIPS, NOT THE WAIST. A lap belt worn too high could increase the risk of internal injuries in an accident.**

- **Be sure the seat belt tongue is securely fastened to the proper buckle.**
- **Do not wear the seat belt inside out or twisted. Doing so may reduce its effectiveness.**
- **Do not allow more than one person to use the same seat belt.**
- **Never carry more people in the vehicle than there are seat belts.**
- **If the seat belt warning light glows continuously while the ignition is turned on with all doors closed and all seat belts fastened, it may indicate a malfunction in the system. Have the system checked. It is recommended that you visit a NISSAN dealer for this service.**
- **No changes should be made to the seat belt system. For example, do not modify the seat belt, add material, or install devices that may change the seat belt routing or tension. Doing so may affect the operation of the seat belt system. Modifying or tampering with the seat belt system may result in serious personal injury.**
- **Once seat belt pretensioner(s) have activated, they cannot be reused and must be replaced together with the retractor. It is recommended that you visit a NISSAN dealer for this service.**
- **All seat belt assemblies, including retractors and attaching hardware, should be inspected after any collision. It is recommended that you visit a NISSAN dealer for this service. NISSAN recommends that all seat belt assemblies in use during a collision be replaced unless the collision was minor and the belts show no damage and continue to operate properly. Seat belt assemblies not in use during a collision should also be inspected and replaced if either damage or improper operation is noted.**
- **All child restraints and attaching hardware should be inspected after any collision. Always follow the restraint manufacturer's inspection instructions and replacement recommendations. The child restraints should be replaced if they are damaged.**

SEAT BELT WARNING LIGHT AND CHIME

The driver and front passenger seat is equipped with an enhanced seat belt reminder function. If your vehicle is equipped with an enhanced seat belt reminder function, a visual and audible alert will operate if a driver or front passenger seat belt is unbuckled at speeds of approximately 9 mph (15 km/h) or more under the following conditions:

- If the driver seat belt is not fastened.

- The front passenger's seat belt is not fastened and the seat is occupied by a passenger.
- The front passenger's seat belt is not fastened and objects or external force on the passenger seat change the seat belt reminder classification to Occupied.

The seat belt warning light will flash under the conditions shown above until the necessary seat belt is securely fastened.

A warning chime will sound for approximately 90 seconds or until one of the following conditions is met:

- The unbuckled front occupant's seat belt is securely fastened.
- The seat belt reminder function in the front passenger seat no longer detects that the front passenger seat is occupied.
- The ignition is turned off or the vehicle is placed in P (Park).

The below situations could result in the seat belt reminder light being illuminated and the chime sounding, even with no occupant present in the passenger seat:

- Heavy objects placed on the seat.
- Someone pushing or pulling on the front passenger seat.
- An object placed under the front passenger seat.
- An object placed between the seat cushion and center console or between the seat cushion and the door.
- An object hanging on the seat or placed in the seatback pocket.
- A child restraint or other object pressing against the rear of the seatback.

PREGNANT WOMEN

NISSAN recommends that pregnant women use seat belts. The seat belt should be worn snug and always position the lap belt as low as possible around the hips, not the waist. Place the shoulder belt over your shoulder and across your chest. Never run the lap/shoulder belt over your abdominal area. Contact your doctor for specific recommendations.

INJURED PERSONS

NISSAN recommends that injured persons use seat belts. Check with your doctor for specific recommendations.

THREE-POINT TYPE SEAT BELT WITH RETRACTOR

⚠WARNING

- **Every person who drives or rides in this vehicle should use a seat belt at all times. Children should be in the rear seats and in an appropriate restraint.**
- **Do not ride in a moving vehicle when the seatback is reclined. This can be dangerous. The shoulder belt will not be against your body. In an accident, you could be thrown into it and receive neck or other serious injuries. You could also slide under the lap belt and receive serious internal injuries.**
- **For the most effective protection when the vehicle is in motion, the seat should be upright. Always sit well back and upright in the seat with both feet on the floor and adjust the seat belt properly.**

- **Do not allow children to play with the seat belts. Most seating positions are equipped with Automatic Locking Retractor (ALR) mode seat belts. If the seat belt becomes wrapped around a child's neck with the ALR mode activated, the child can be seriously injured or killed if the seat belt retracts and becomes tight. This can occur even if the vehicle is parked. Unbuckle the seat belt to release the child. If the seat belt cannot be unbuckled or is already unbuckled, release the child by cutting the seat belt with a suitable tool (such as a knife or scissors) to release the seat belt.**

Manual front seat shown (if so equipped)

Fastening the seat belts

1. Adjust the seat. For additional information, see "Seats" (P. 1-2).

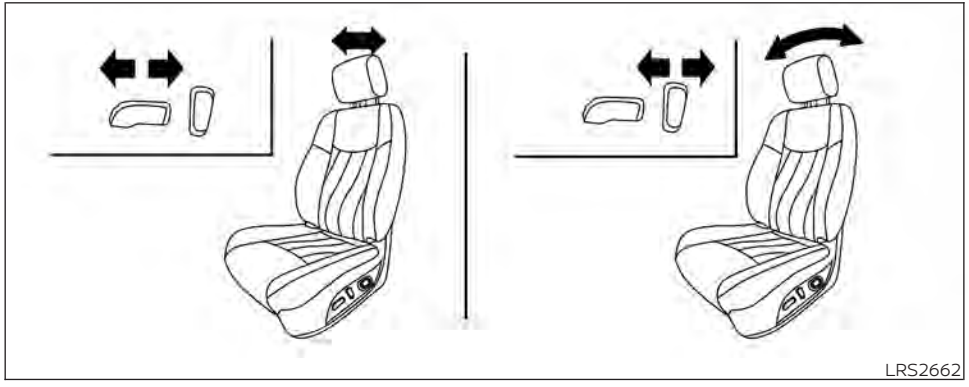

Power front seat shown (if so equipped)

2. Slowly pull the seat belt out of the retractor and insert the tongue into the buckle Ⓐ until you hear and feel the latch engage.
   - **The retractor is designed to lock during a sudden stop or on impact. A slow pulling motion permits the seat belt to move and allows you some freedom of movement in the seat.**
   - **If the seat belt cannot be pulled from its fully retracted position, firmly pull the belt and release it. Then smoothly pull the belt out of the retractor.**

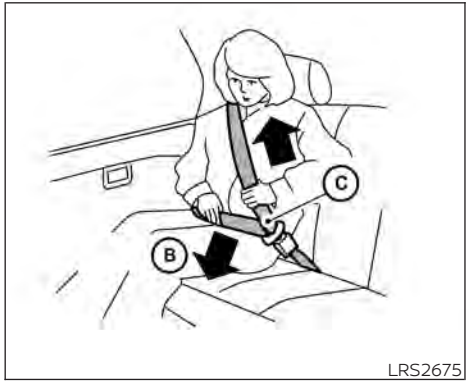

LRS2675

3. Position the lap belt portion **low and snug on the hips** Ⓑ as shown.
4. Pull the shoulder belt portion toward the retractor to take up extra slack Ⓒ. Be sure the shoulder belt is routed over your shoulder and across your chest.

The front passenger seat and the rear seating positions' three-point seat belts have two modes of operation:

- Emergency Locking Retractor (ELR)
- Automatic Locking Retractor (ALR)

The ELR mode allows the seat belt to extend and retract to allow the driver and passengers some freedom of movement in the seat. The ELR locks the seat belt when the vehicle slows down rapidly or during certain impacts.

The ALR mode (child restraint mode) locks the seat belt for child restraint installation.

When the ALR mode is activated, the seat belt cannot be extended again until the seat belt tongue is detached from the buckle and fully retracted. The seat belt returns to the ELR mode after the seat belt fully retracts. For additional information, see "Child restraints" (P. 1-23).

The ALR mode should be used only for child restraint installation. During normal seat belt use by an occupant, the ALR mode should not be activated. If it is activated, it may cause uncomfortable seat belt tension. It can also change the operation of the front passenger air bag. For additional information, see "Front passenger air bag and status light" (P. 1-57).

⚠ WARNING

When fastening the seat belts, be certain that the seatbacks are completely secured in the latched position. If they are not completely secured, passengers may be injured in an accident or sudden stop.

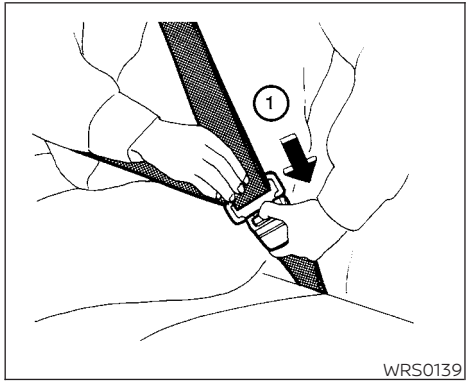

WRS0139

Unfastening the seat belts

To unfasten the seat belt, press the button on the buckle ①. The seat belt automatically retracts.

Checking seat belt operation

Seat belt retractors are designed to lock seat belt movement by two separate methods:

- When the seat belt is pulled quickly from the retractor
- When the vehicle slows down rapidly

To increase your confidence in the seat belts, check the operation as follows:

- Grasp the shoulder belt and pull forward quickly. The retractor should lock and restrict further belt movement.

If the retractor does not lock during this check, get the system checked. It is recommended that you visit a NISSAN dealer for this service or to learn more about seat belt operation.

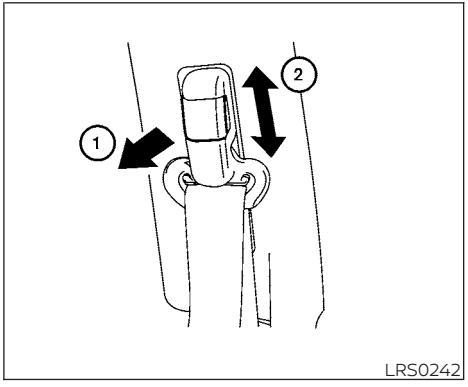

LRS0242

Shoulder belt height adjustment (front seats)

The shoulder belt anchor height should be adjusted to the position best for you. For additional information, see "Precautions on seat belt usage" (P. 1-12). To adjust, pull out the adjustment button ① and move the shoulder belt anchor to the desired position ②, so the belt passes over the center of the shoulder. The belt should be away from your face and neck, but not falling off your shoulder. Release the adjustment button to lock the shoulder belt anchor into position.

⚠ WARNING

- **After adjustment, release the adjustment button and try to move the shoulder belt anchor up and down to make sure it is securely fixed in position.**
- **The shoulder belt anchor height should be adjusted to the position best for you. Failure to do so may reduce the effectiveness of the entire restraint system and increase the chance or severity of injury in an accident.**

SEAT BELT EXTENDERS

If, because of body size or driving position, it is not possible to properly fit the lap/shoulder belt and fasten it, an extender that is compatible with the installed seat belts is available for purchase. The extender adds approximately 8 in (200 mm) of length and may be used for either the driver or front passenger seating position. It is recommended that you visit a NISSAN dealer for assistance with purchasing an extender if an extender is required.

⚠ WARNING

- **Only NISSAN seat belt extenders, made by the same company which made the original equipment seat belts, should be used with NISSAN seat belts.**
- **Adults and children who can use the standard seat belt should not use an extender. Such unnecessary use could result in serious personal injury in the event of an accident.**
- **Never use seat belt extenders to install child restraints. If the child restraint is not secured properly, the child could be seriously injured or killed in a collision or a sudden stop.**

SEAT BELT MAINTENANCE

- **To clean the seat belt webbing,** apply a mild soap solution or any solution recommended for cleaning upholstery or carpet. Then wipe with a cloth and allow the seat belts to dry in the shade. Do not allow the seat belts to retract until they are completely dry.
- **If dirt builds up in the shoulder belt guide of the seat belt anchors,** the seat belts may retract slowly. Wipe the shoulder belt guide with a clean, dry cloth.
- **Periodically check to see that the seat belt and the metal components,** such as buckles, tongues, retractors, flexible wires and anchors, work properly. If loose parts, deterioration, cuts or other damage on the webbing is found, the entire seat belt assembly should be replaced.

⚠ WARNING

Do not allow children to play with the seat belts. Most seating positions are equipped with Automatic Locking Retractor (ALR) mode seat belts. If the seat belt becomes wrapped around a child's neck with the ALR mode activated, the child can be seriously injured or killed if the seat belt retracts and becomes tight. This can occur even if the vehicle is parked. Unbuckle the seat belt to release the child. If the seat belt cannot be unbuckled or is already unbuckled, release the child by cutting the seat belt with a suitable tool (such as a knife or scissors) to release the seat belt.

Children need adults to help protect them. They need to be properly restrained.

In addition to the general information in this manual, child safety information is available from many other sources, including doctors, teachers, government traffic safety offices, and community organizations. Every child is different, so be sure to learn the best way to transport your child.

There are three basic types of child restraint systems:

- Rear-facing child restraints
- Forward-facing child restraints
- Booster seats

The proper restraint depends on the child's size. Generally, infants up to about 1 year and less than 20 lbs. (9 kg) should be placed in rear-facing child restraints. Forward-facing child restraints are available for children who outgrow rear-facing child restraints and are at least 1 year old. Booster seats are used to help position a vehicle lap/shoulder belt on a child who can no longer use a forward-facing child restraint.

⚠ WARNING

Infants and children need special protection. The vehicle's seat belts may not fit them properly. The shoulder belt may come too close to the face or neck. The lap belt may not fit over their small hip bones. In an accident, an improperly fitting seat belt could cause serious or fatal injury. Always use appropriate child restraints.

All U.S. states and Canadian provinces or territories require the use of approved child restraints for infants and small children. For additional information, see "Child restraints" (P. 1-23).

A child restraint may be secured in the vehicle by using either the LATCH (Lower Anchors and Tethers for CHildren) system or with the vehicle seat belt. For additional information, see "Child restraints" (P. 1-23).

NISSAN recommends that all pre-teens and children be restrained in the rear seat. Studies show that children are safer when properly restrained in the rear seat than in the front seat.

This is especially important because your vehicle has a supplemental restraint system (air bag system) for the front passenger. For additional information, see "Supplemental Restraint System (SRS)" (P. 1-47).

INFANTS

Infants up to at least 1 year old should be placed in a rear-facing child restraint. NISSAN recommends that infants be placed in child restraints that comply with Federal Motor Vehicle Safety Standards or Canadian Motor Vehicle Safety Standards. You should choose a child restraint that fits your vehicle and always follow the manufacturer's instructions for installation and use.

SMALL CHILDREN

Children that are over 1 year old and weigh at least 20 lbs. (9 kg) should remain in a rear-facing child restraint as long as possible up to the height or weight limit of the child restraint. Children who outgrow the height or weight limit of the rear-facing child restraint and are at least 1 year old should be secured in a forward-facing child restraint with a harness. Refer to the manufacturer's instructions for minimum and maximum weight and height recommendations. NISSAN recommends that small children be placed in child restraints that comply with Federal Motor Vehicle Safety Standards or Canadian Motor Vehicle Safety Standards. You should choose a child restraint that fits your vehicle and always follow the manufacturer's instructions for installation and use.

LARGER CHILDREN

Children should remain in a forward-facing child restraint with a harness until they reach the maximum height or weight limit allowed by the child restraint manufacturer.

Once a child outgrows the height or weight limit of the harness-equipped forward-facing child restraint, NISSAN recommends that the child be placed in a commercially available booster seat to obtain proper seat belt fit. For a seat belt to fit properly, the booster seat should raise the child so that the shoulder belt is properly positioned across the chest and the top, middle portion of the shoulder. The shoulder belt should not cross the neck or face and should not fall off the shoulder. The lap belt should lie snugly across the lower hips or upper thighs, not the abdomen. A booster seat can only be used in seating positions that have a three-point type seat belt. The booster seat should fit the vehicle seat and have a label certifying that it complies with Federal Motor Vehicle Safety Standards or Canadian Motor Vehicle Safety Standards.

A booster seat should be used until the child can pass the seat belt fit test below:

- Are the child's back and hips against the vehicle seatback?
- Is the child able to sit without slouching?
- Do the child's knees bend easily over the front edge of the seat with feet flat on the floor?
- Can the child safely wear the seat belt (lap belt low and snug across the hips and shoulder belt across mid-chest and shoulder)?
- Is the child able to use the properly adjusted head restraint/headrest?
- Will the child be able to stay in position for the entire ride?

LRS2690

If you answered no to any of these questions, the child should remain in a booster seat using a three-point type seat belt.

NOTE:

Laws in some communities may follow different guidelines. Check local and state regulations to confirm your child is using the correct restraint system before traveling.

⚠WARNING

Never let a child stand or kneel on any seat and do not allow a child in the cargo area. The child could be seriously injured or killed in a sudden stop or collision.

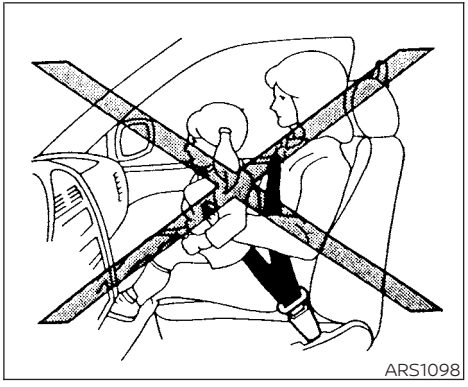
ARS1098

PRECAUTIONS ON CHILD RESTRAINTS

⚠WARNING

- **Failure to follow the warnings and instructions for proper use and installation of child restraints could result in serious injury or death of a child or other passengers in a sudden stop or collision:**

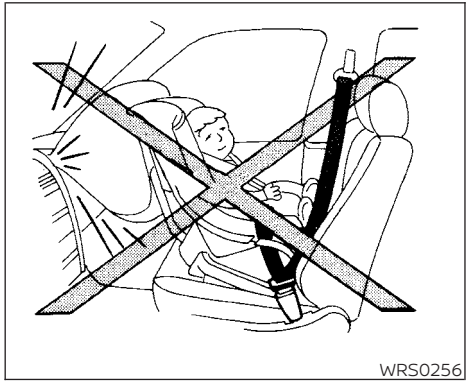

- The child restraint must be used and installed properly. Always follow all of the child restraint manufacturer's instructions for installation and use.
- Infants and children should never be held on anyone's lap. Even the strongest adult cannot resist the forces of a collision.
- Do not put a seat belt around both a child and another passenger.
- NISSAN recommends that all child restraints be installed in the rear seat. Studies show that children are safer when properly restrained in the rear seat than in the front seat. If you must install a forward-facing child restraint in the front seat, see "Forward-facing child restraint installation using the seat belts" (P. 1-38).
- Even with the NISSAN Advanced Air Bag System, never install a rear-facing child restraint in the front seat. An inflating air bag could seriously injure or kill a child. A rear-facing child restraint must only be used in the rear seat.
- Be sure to purchase a child restraint that will fit the child and vehicle. Some child restraints may not fit properly in your vehicle.
- Child restraint anchorages are designed to withstand only those loads imposed by correctly fitted child restraints. Under no circumstances are they to be used to attach adult seat belts, or other items or equipment to the vehicle. Doing so could damage the child restraint anchorages. The child restraint will not be properly installed using the damaged anchorage, and a child could be seriously injured or killed in a collision.
- Never use the anchor points for adult seat belts, or other items.
- A child restraint with a top tether strap should not be used in the front passenger seat.
- Keep seatbacks as upright as possible after fitting the child restraint.
- Infants and children should always be placed in an appropriate child restraint while in the vehicle.

· When the child restraint is not in use, keep it secured with the LATCH system or a seat belt. In a sudden stop or collision, loose objects can injure occupants or damage the vehicle.

⚠ CAUTION

A child restraint in a closed vehicle can become very hot. Check the seating surface and buckles before placing a child in the child restraint.

This vehicle is equipped with a universal child restraint anchor system, referred to as the LATCH (Lower Anchors and Tethers for CHildren) system. Some child restraints include rigid or webbing-mounted attachments that can be connected to these anchors. For additional information, see "LATCH (Lower Anchors and Tethers for CHildren) system" (P. 1-25).

If you do not have a LATCH compatible child restraint, the vehicle seat belts can be used.

Several manufacturers offer child restraints for infants and children of various sizes. When selecting any child restraint, keep the following points in mind:

- Choose only a restraint with a label certifying that it complies with Federal Motor Vehicle Safety Standard 213 or Canadian Motor Vehicle Safety Standard 213.
- Check the child restraint in your vehicle to be sure it is compatible with the vehicle's seat and seat belt system.
- If the child restraint is compatible with your vehicle, place your child in the child restraint and check the various adjustments to be sure the child restraint is compatible with your child. Choose a child restraint that is designed for your child's height and weight. Always follow all recommended procedures.
- If the combined weight of the child and child restraint is less than 65 lbs. (29.5 kg), you may use either the LATCH anchors or the seat belt to install the child restraint (not both at the same time).
- If the combined weight of the child and child restraint is greater than 65 lbs. (29.5 kg), use the vehicle's seat belt (not the lower anchors) to install the child restraint.
- Be sure to follow the child restraint manufacturer's instructions for installation.

All U.S. states and Canadian provinces or territories require that infants and small children be restrained in an approved child restraint at all times while the vehicle is being operated. Canadian law requires the top tether strap on forward-facing child restraints be secured to the designated anchor point on the vehicle.

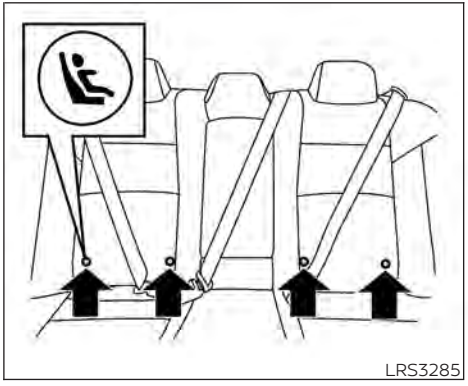

LATCH system anchor locations

LATCH (Lower Anchors and Tethers for CHildren) SYSTEM

Your vehicle is equipped with special anchor points that are used with LATCH system compatible child restraints. This system may also be referred to as the ISOFIX or ISOFIX compatible system. With this system, you do not have to use a vehicle seat belt to secure the child restraint unless the combined weight of the child and child restraint exceeds 65 lbs. (29.5 kg). If the combined weight of the child and child restraint is greater than 65 lbs. (29.5 kg), use the vehicle's seat belt (not the lower anchors) to

install the child restraint. Be sure to follow the child restraint manufacturer's instructions for installation.

The LATCH anchor points can be used to install child restraints in either of the rear outboard seating positions or in the center rear seating position. Please refer to the following section of this Owner's Manual for specific information about installing a child restraint in the center rear seating position using the LATCH anchors.

LATCH lower anchor

⚠ WARNING

Failure to follow the warnings and instructions for proper use and installation of child restraints could result in serious injury or death of a child or other passengers in a sudden stop or collision:

- **Only attach LATCH system compatible child restraints to the Lower Anchors shown in the illustration. For additional information, refer to the following sections of this Owner's Manual for installation guidance.**
- **Inspect the lower anchors by inserting your fingers into the lower anchor area. Feel to make sure there are no obstructions over the anchors such as seat belt webbing or seat cushion material. The child restraint will not be secured properly if the lower anchors are obstructed.**

Child restraint anchorages are designed to withstand only those loads imposed by correctly fitted child restraints. Under no circumstances are they to be used to attach adult seat belts, or other items or equipment to the vehicle. Doing so could damage the child restraint anchorages. The child restraint will not be properly installed using the damaged anchorage, and a child could be seriously injured or killed in a collision.

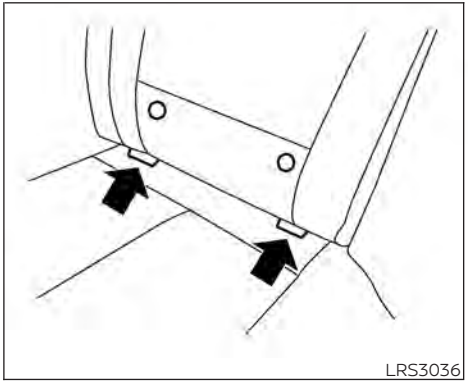

LATCH lower anchor location

LATCH lower anchor location

The LATCH lower anchors are located as shown. A label is attached to the seatback to help you locate the LATCH lower anchors.

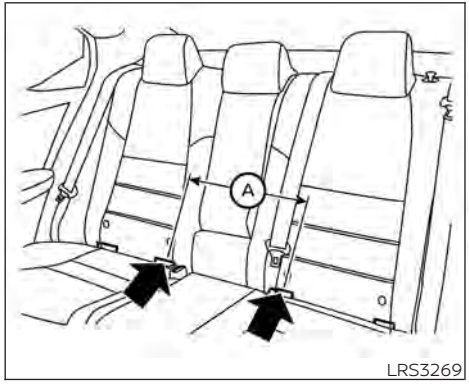

LRS3269

LATCH in the center rear seating position

There are no LATCH anchors dedicated to the center rear seating position. However, the inboard LATCH anchors belonging to the two outboard seating positions (indicated by the arrows) can be used together to secure a CRS in the center rear seating position. These anchors are separated by a distance Ⓐ of 16 in (408 mm). Before attempting to secure a CRS in this seating position, ensure that the CRS manufacturer's instructions permit the use of LATCH anchors with the spacing indicated above. (These are sometimes referred to as "shared anchors" or "borrowed anchors.")

CRS with rigid lower attachments cannot be installed in the center seat. This type of CRS should only be installed in the outboard seating positions.

⚠WARNING

- **Never attach two CRS attachments to the same LATCH anchor. This may overload the anchor in a collision, which could increase the risk of the occupant's serious injury or death.**
- **When installing the CRS in the center rear seating position with the inboard LATCH anchors, be careful to ensure any occupant or CRS in the outboard seating positions is properly restrained using the vehicle seat belt and there is no interference with the center CRS installation. If the outboard occupants cannot be properly restrained, consider using the vehicle seat belt to restrain the CRS in the center seating position, or moving the CRS to another position instead.**

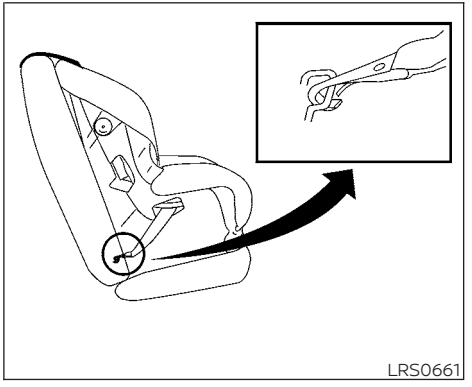
LRS0661

LATCH webbing-mounted attachment

Installing child restraint LATCH lower anchor attachments

LATCH compatible child restraints include two rigid or webbing-mounted attachments that can be connected to two anchors located at certain seating positions in your vehicle. With this system, you do not have to use a vehicle seat belt to secure the child restraint. Check your child restraint for a label stating that it is compatible with LATCH. This information may also be in the instructions provided by the child restraint manufacturer.

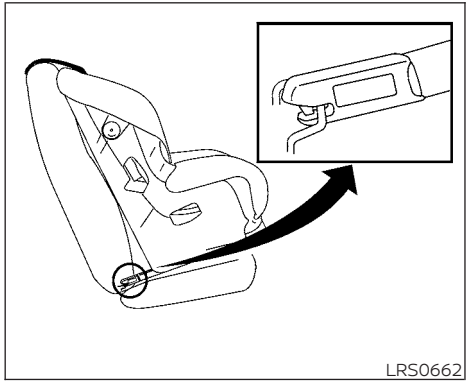

LATCH rigid-mounted attachment

When installing a child restraint, carefully read and follow the instructions in this manual and those supplied with the child restraint.

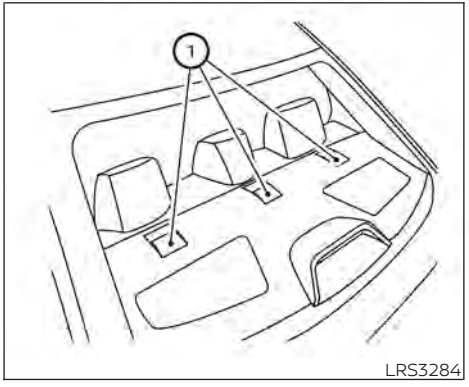

Top tether anchor point locations

The child restraint top tether strap must be used when installing the child restraint with the LATCH lower anchor attachments or seat belts. For additional information, see "Installing top tether strap" (P. 1-37).

⚠ WARNING

Child restraint anchorages are designed to withstand only those loads imposed by correctly fitted child restraints. Under no circumstances are they to be used to attach adult seat belts, or other items or equipment to the vehicle. Doing so could damage the child restraint anchorages. The child restraint will not be properly installed using the damaged anchorage, and a child could be seriously injured or killed in a collision.

If you have any questions when installing a top tether strap, it is recommended that you visit a NISSAN dealer for this service.

Anchor points ① are located on the rear parcel shelf.

REAR-FACING CHILD RESTRAINT INSTALLATION USING LATCH

For additional information, see all Warnings and Cautions in the "Child safety" (P. 1-21) and "Child restraints" (P. 1-23) before installing a child restraint.

Do not use the lower anchors if the combined weight of the child and the child restraint exceeds 65 lbs. (29.5 kg). If the combined weight of the child and the child restraint is greater than 65 lbs. (29.5 kg), use the vehicle's seat belt (not the lower anchors) to install the child restraint. Be sure to follow the child restraint manufacturer's instructions for installation.

Follow these steps to install a rear-facing child restraint using the LATCH system:

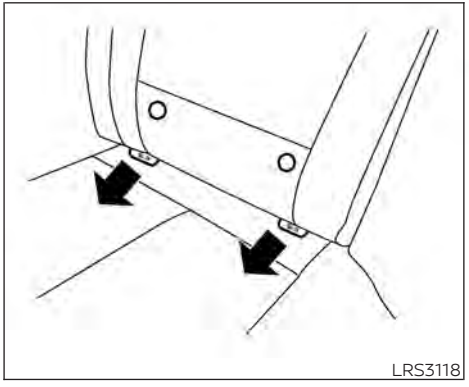

Type A (if so equipped) — step 1

1. **Type A (if so equipped):**

   Remove the plastic covers from the LATCH anchors by pulling the covers straight back. Store the covers in a secure area.

   Type B (if so equipped):

   Lift the flap of the material to expose the LATCH anchors.

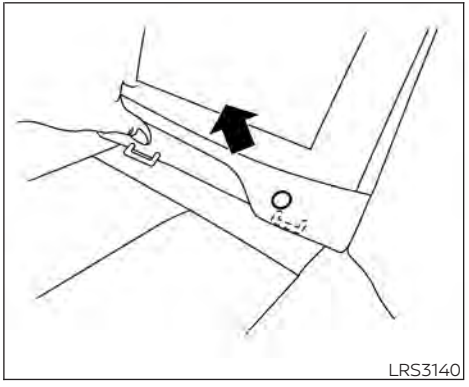

Type B (if so equipped) — step 1

2. Position the child restraint on the seat. Always follow the child restraint manufacturer's instructions.

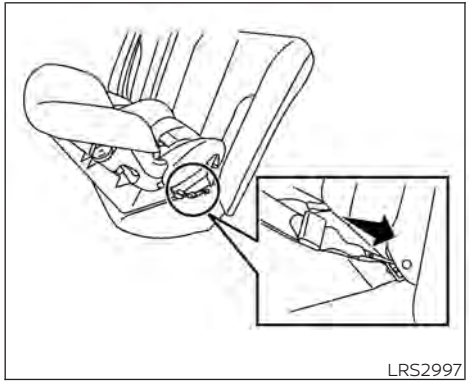

Rear-facing webbing-mounted – step 3

3. Secure the child restraint anchor attachments to the LATCH lower anchors. Check to make sure the LATCH attachment is properly attached to the lower anchors.

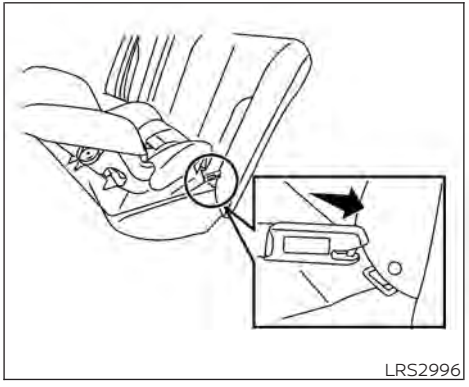

Rear-facing rigid-mounted – step 3

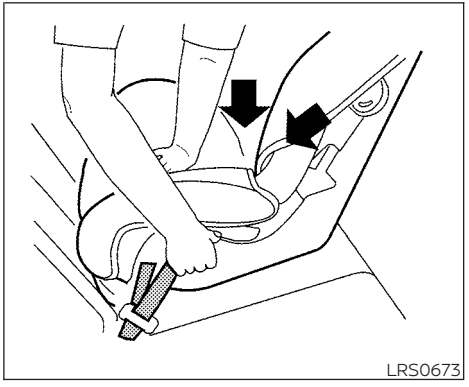

Rear-facing – step 4

4. For child restraints that are equipped with webbing-mounted attachments, remove any additional slack from the anchor attachments. Press downward and rearward firmly in the center of the child restraint with your hand to compress the vehicle seat cushion and seatback while tightening the webbing of the anchor attachments.

5. Tighten the tether strap according to the manufacturer's instructions to remove any slack.

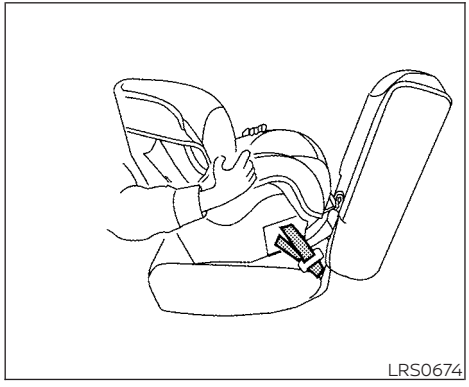

Rear-facing – step 6

6. After attaching the child restraint, test it before you place the child in it. Push it from side to side while holding the child restraint near the LATCH attachment path. The child restraint should not move more than 1 inch (25 mm), from side to side. Try to tug it forward and check to see if the LATCH attachment holds the restraint in place. If the restraint is not secure, tighten the LATCH attachment as necessary, or put the restraint in another seat and test it again. You may need to try a different child restraint or try installing by using the vehicle seat belt (if applicable). Not all child restraints fit in all types of vehicles.
7. Check to make sure the child restraint is properly secured prior to each use. If the child restraint is loose, repeat steps 2 through 6.
8. **Type A (if so equipped):**

   If you remove the child restraint, reinstall the plastic LATCH anchor covers after use by pushing the covers straight onto the LATCH anchors.

   Type B (if so equipped):

   If you remove the child restraint, securely replace the flap by pressing the material firmly against the seat.

REAR-FACING CHILD RESTRAINT INSTALLATION USING THE SEAT BELTS

⚠WARNING

The three-point seat belt with Automatic Locking Retractor (ALR) must be used when installing a child restraint. Failure to use the ALR mode will result in the child restraint not being properly secured. The restraint could tip over or be loose and cause injury to a child in a sudden stop or collision.

For additional information, see all Warnings and Cautions in the "Child safety" (P. 1-21) and "Child restraints" (P. 1-23) before installing a child restraint.

Do not use the lower anchors if the combined weight of the child and the child restraint exceeds 65 lbs. (29.5 kg). If the combined weight of the child and the child restraint is greater than 65 lbs. (29.5 kg), use the vehicle's seat belt (not the lower anchors) to install the child restraint. Be sure to follow the child restraint manufacturer's instructions for installation.

Follow these steps to install a rear-facing child restraint using the vehicle seat belts in the rear seats:

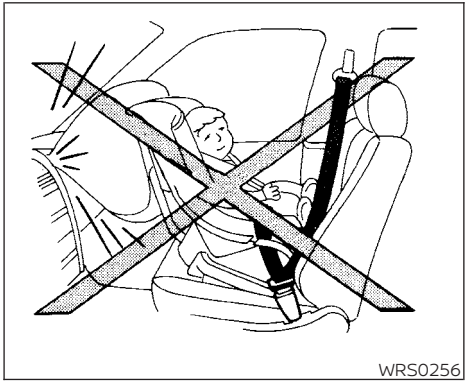

Rear-facing – step 1

1. **Child restraints for infants must be used in the rear-facing direction and therefore must not be used in the front seat.** Position the child restraint on the seat. Always follow the child restraint manufacturer's instructions.

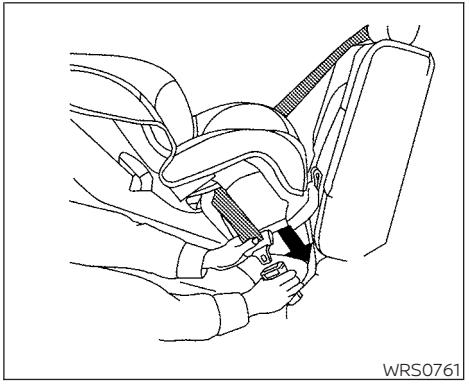

Rear-facing – step 2

2. Route the seat belt tongue through the child restraint and insert it into the buckle until you hear and feel the latch engage. Be sure to follow the child restraint manufacturer's instructions for belt routing.

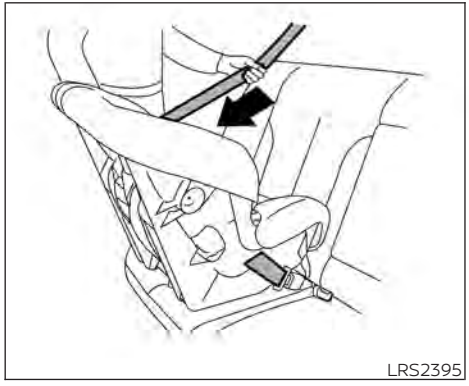

Rear-facing – step 3

3. Pull the shoulder belt until the belt is fully extended. At this time, the seat belt retractor is in the ALR mode (child restraint mode). It reverts to the ELR mode when the seat belt is fully retracted.

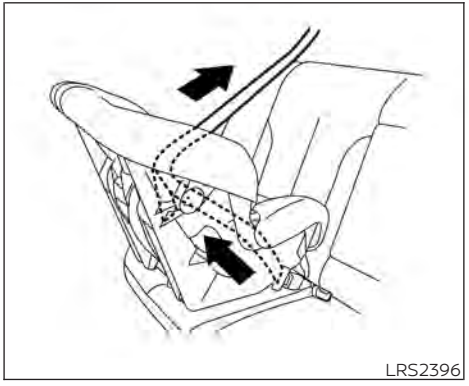

Rear-facing – step 4

4. Allow the seat belt to retract. Pull up on the shoulder belt to remove any slack in the belt.

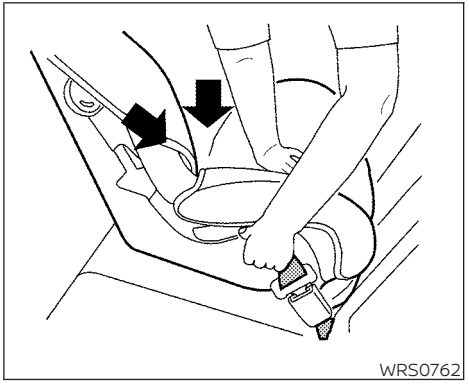

Rear-facing – step 5

5. Remove any additional slack from the seat belt; press downward and rearward firmly in the center of the child restraint to compress the vehicle seat cushion and seatback while pulling up on the seat belt.

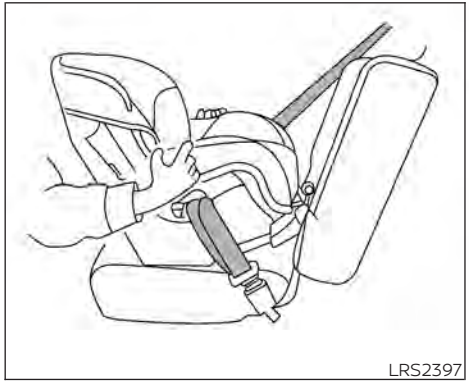

Rear-facing – step 6

6. After attaching the child restraint, test it before you place the child in it. Push it from side to side while holding the child restraint near the seat belt path. The child restraint should not move more than 1 inch (25 mm), from side to side. Try to tug it forward and check to see if the belt holds the restraint in place. If the restraint is not secure, tighten the seat belt as necessary, or put the restraint in another seat and test it again. You may need to try a different child restraint. Not all child restraints fit in all types of vehicles.
7. Check to make sure that the child restraint is properly secured prior to each use. If the seat belt is not locked, repeat steps 3 through 6.

After the child restraint is removed and the seat belt fully retracted, the ALR mode (child restraint mode) is canceled.

FORWARD-FACING CHILD RESTRAINT INSTALLATION USING LATCH

For additional information, see all Warnings and Cautions in "Child safety" (P. 1-21) and "Child restraints" (P. 1-23) before installing a child restraint.

Do not use the lower anchors if the combined weight of the child and the child restraint exceeds 65 lbs. (29.5 kg). If the combined weight of the child and the child restraint is greater than 65 lbs. (29.5 kg), use the vehicle's seat belt (not the lower anchors) to install the child restraint. Be sure to follow the child restraint manufacturer's instructions for installation.

Follow these steps to install a forward-facing child restraint using the LATCH system:

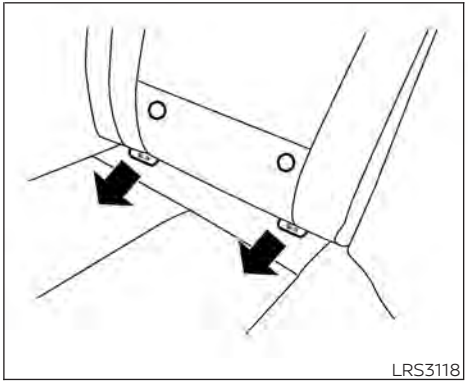

Type A (if so equipped) – step 1

1. **Type A (if so equipped):**

   Remove the plastic covers from the LATCH anchors by pulling the covers straight back. Store the covers in a secure area.

   Type B (if so equipped):

   Lift the flap of the material to expose the LATCH anchors.

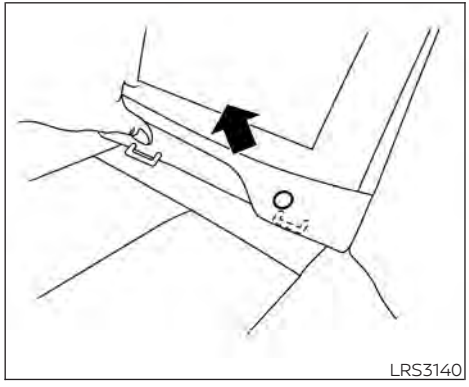

Type B (if so equipped) – step 1

2. Position the child restraint on the seat. Always follow the child restraint manufacturer's instructions.

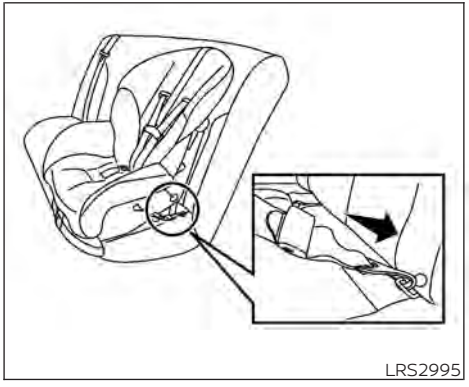

Forward-facing webbing-mounted – step 3

3. Secure the child restraint anchor attachments to the LATCH lower anchors. Check to make sure the LATCH attachment is properly attached to the lower anchors.

   If the child restraint is equipped with a top tether strap, route the top tether strap and secure the tether strap to the tether anchor point. For additional information, see "Installing top tether strap" (P. 1-37).

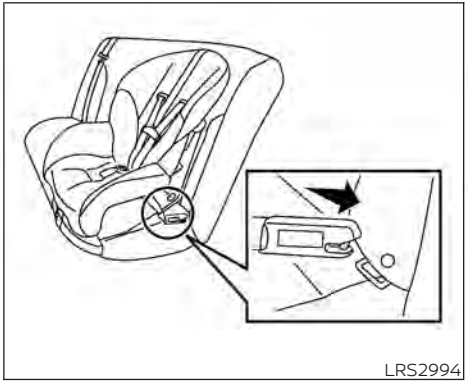

Forward-facing rigid-mounted – step 3

   Do not install child restraints that require the use of a top tether strap in seating positions that do not have a top tether anchor.

4. The back of the child restraint should be secured against the vehicle seatback.

   If necessary, adjust or remove the head restraint/headrest to obtain the correct child restraint fit. If the head restraint/headrest is removed, store it in a secure place. **Be sure to reinstall the head restraint/headrest when the child restraint is removed.** For additional information about head restraint/headrest

adjustment, see "Head restraints/headrests" (P. 1-8).

If the seating position does not have an adjustable head restraint/headrest and it is interfering with the proper child restraint fit, try another seating position or a different child restraint.

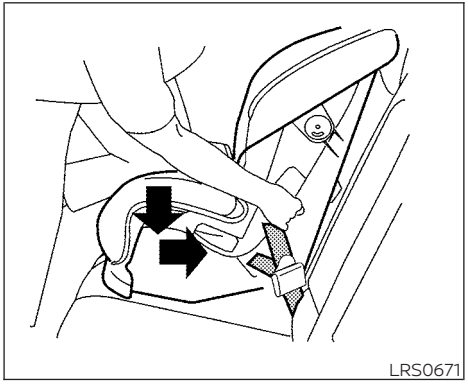

Forward-facing – step 5

5. For child restraints that are equipped with webbing-mounted attachments, remove any additional slack from the anchor attachments. Press downward and rearward firmly in the center of the child restraint with your knee to compress the vehicle seat cushion and seatback while tightening the webbing of the anchor attachments.

6. Tighten the tether strap according to the manufacturer's instructions to remove any slack.

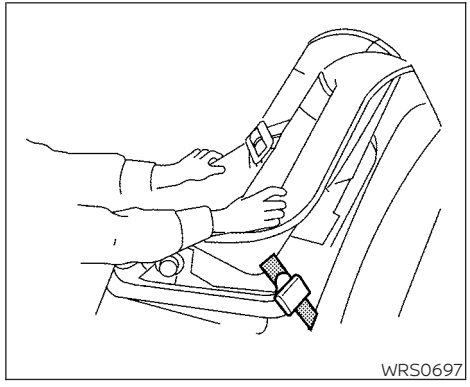

Forward-facing – step 7

7. After attaching the child restraint, test it before you place the child in it. Push it from side to side while holding the child restraint near the LATCH attachment path. The child restraint should not move more than 1 inch (25 mm), from side to side. Try to tug it forward and check to see if the LATCH attachment holds the restraint in place. If the restraint is not secure, tighten the LATCH attachment as necessary, or put the restraint in another seat and test it again. You may need to try a different child restraint or try installing by using the vehicle seat

belt (if applicable). Not all child restraints fit in all types of vehicles.

8. Check to make sure the child restraint is properly secured prior to each use. If the child restraint is loose, repeat steps 2 through 7.
9. **Type A (if so equipped):**

   If you remove the child restraint, reinstall the plastic LATCH anchor covers after use by pushing the covers straight onto the LATCH anchors.

   Type B (if so equipped):

   If you remove the child restraint, securely replace the flap by pressing the material firmly against the seat.

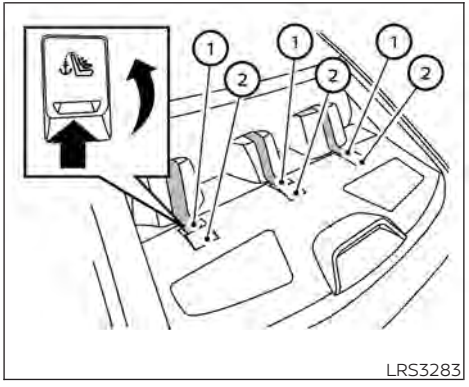

Rear seats

① Top tether strap

② Anchor point

Installing top tether strap

The child restraint top tether strap must be used when installing the child restraint with the LATCH lower anchor attachments.

First, secure the child restraint with the LATCH lower anchors.

Rear bench seat

OUTBOARD SEATING POSITIONS

1. Position the top tether strap ① over the seatback.
2. Secure the tether strap to the tether anchor point ② as shown.
3. Tighten the tether strap according to the manufacturer's instructions to remove any slack.

CENTER SEATING POSITION

1. Position the top tether strap ① over the seatback.
2. Secure the tether strap to the tether anchor point ② as shown.
3. Tighten the tether strap according to the manufacturer's instructions to remove any slack.

If you have any questions when installing a top tether strap, it is recommended that you visit a NISSAN dealer for this service.

⚠ WARNING

Child restraint anchorages are designed to withstand only those loads imposed by correctly fitted child restraints. Under no circumstances are they to be used to attach adult seat belts, or other items or equipment to the vehicle. Doing so could damage the child restraint anchorages. The child restraint will not be properly installed using the damaged anchorage, and a child could be seriously injured or killed in a collision.

FORWARD-FACING CHILD RESTRAINT INSTALLATION USING THE SEAT BELTS

⚠ WARNING

The three-point seat belt with Automatic Locking Retractor (ALR) must be used when installing a child restraint. Failure to use the ALR mode will result in the child restraint not being properly secured. The restraint could tip over or be loose and cause injury to a child in a sudden stop or collision. Also, it can change the operation of the front passenger air bag. For additional information, see "Front passenger air bag and status light" (P. 1-57).

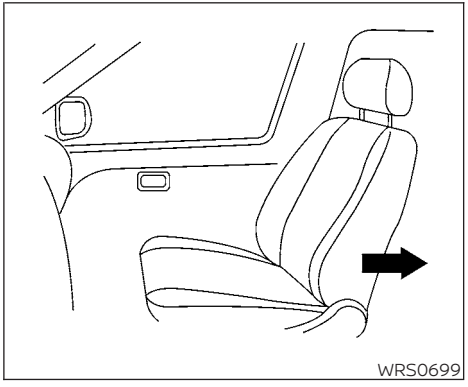

Forward-facing (front passenger seat) – step 1

For additional information, see all Warnings and Cautions in the "Child safety" (P. 1-21) and "Child restraints" (P. 1-23) before installing a child restraint.

Do not use the lower anchors if the combined weight of the child and the child restraint exceeds 65 lbs. (29.5 kg). If the combined weight of the child and the child restraint is greater than 65 lbs. (29.5 kg), use the vehicle's seat belt (not the lower anchors) to install the child restraint. Be sure to follow the child restraint manufacturer's instructions for installation.

Follow these steps to install a forward-facing child restraint using the vehicle seat belt in the rear seats or in the front passenger seat:

1. **If you must install a child restraint in the front seat, it should be placed in a forward-facing direction only. Move the seat to the rearmost position. Child restraints for infants must be used in the rear-facing direction and, therefore, must not be used in the front seat.**

2. Position the child restraint on the seat. Always follow the child restraint manufacturer's instructions.

   The back of the child restraint should be secured against the vehicle seatback.

   If necessary, adjust or remove the head restraint/headrest to obtain the correct child restraint fit. If the head restraint/headrest is removed, store it in a secure place. **Be sure to reinstall the head restraint/headrest when the child restraint is removed.** For additional information about head restraint/headrest adjustment, removal and installation, see "Head restraints/headrests" (P. 1-8).

If the seating position does not have an adjustable head restraint/headrest and it is interfering with the proper child restraint fit, try another seating position or a different child restraint.

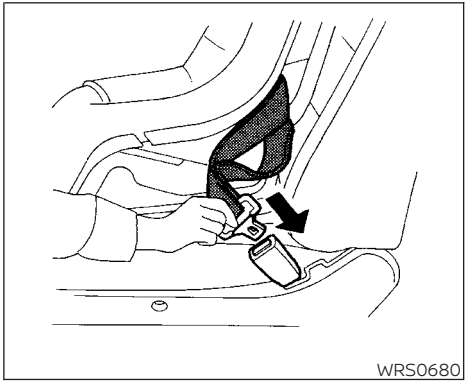

Forward-facing – step 3

3. Route the seat belt tongue through the child restraint and insert it into the buckle until you hear and feel the latch engage. Be sure to follow the child restraint manufacturer's instructions for belt routing.

   If the child restraint is equipped with a top tether strap, route the top tether strap and secure the tether strap to the tether anchor point (rear seat installation only). For additional information, see "Installing top tether strap" (P. 1-42).

Do not install child restraints that require the use of a top tether strap in seating positions that do not have a top tether anchor.

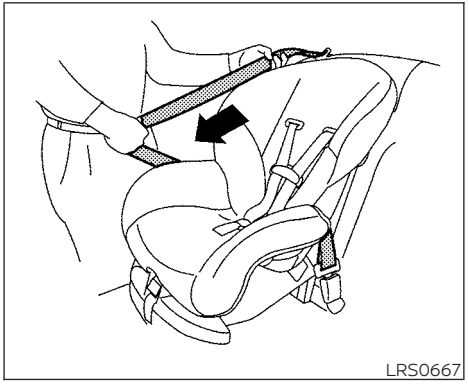

Forward-facing – step 4

4. Pull the shoulder belt until the belt is fully extended. At this time, the seat belt retractor is in the ALR mode (child restraint mode). It reverts to ELR mode when the seat belt is fully retracted.

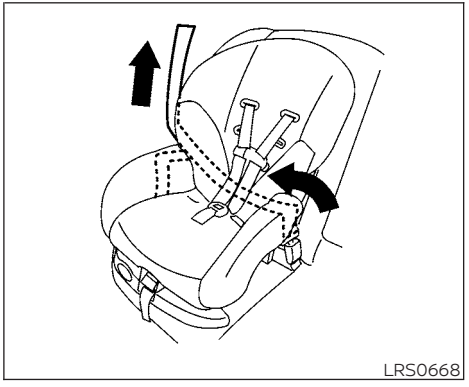

Forward-facing – step 5

5. Allow the seat belt to retract. Pull up on the shoulder belt to remove any slack in the belt.

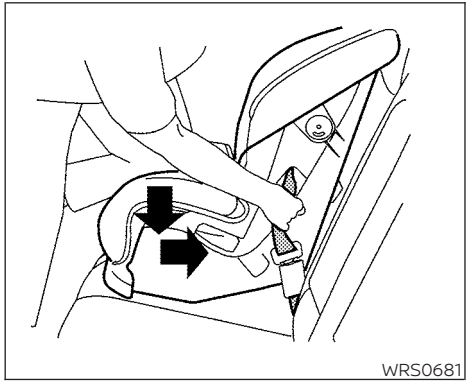

Forward-facing – step 6

6. Remove any additional slack from the seat belt; press downward and rearward firmly in the center of the child restraint with your knee to compress the vehicle seat cushion and seatback while pulling up on the seat belt.
7. Tighten the tether strap according to the manufacturer's instructions to remove any slack.

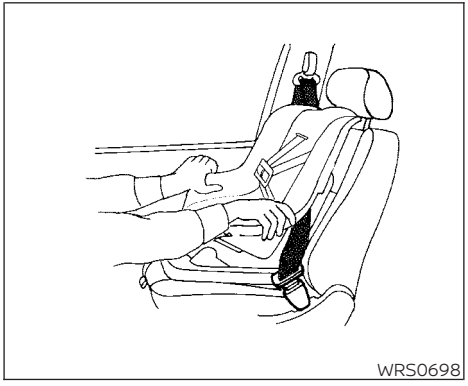

Forward-facing – step 8

8. After attaching the child restraint, test it before you place the child in it. Push it from side to side while holding the child restraint near the seat belt path. The child restraint should not move more than 1 inch (25 mm), from side to side. Try to tug it forward and check to see if the belt holds the restraint in place. If the restraint is not secure, tighten the seat belt as necessary, or put the restraint in another seat and test it again. You may need to try a different child restraint. Not all child restraints fit in all types of vehicles.
9. Check to make sure the child restraint is properly secured prior to each use. If the seat belt is not locked, repeat steps 4 through 8.

Forward-facing – step 10

10. If the child restraint is installed in the front passenger seat, place the ignition switch in the ON position. The front passenger air bag status light OFF 2 should illuminate. If this light is not illuminated, see "Front passenger air bag and status light" (P. 1-57). **Move the child restraint to another seating position.** Have the system checked. It is recommended that you visit a NISSAN dealer for this service.

After the child restraint is removed and the seat belt is fully retracted, the ALR mode (child restraint mode) is canceled.

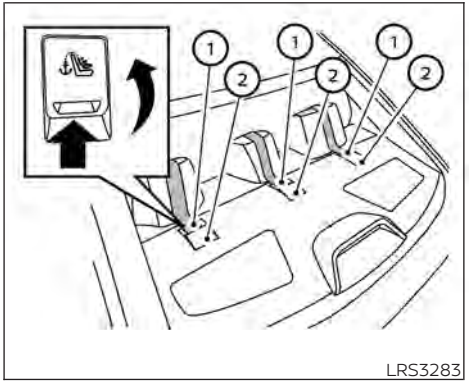

Rear seats

① Top tether strap

② Anchor point

Installing top tether strap

The child restraint top tether strap must be used when installing the child restraint with seat belts.

First, secure the child restraint with the seat belt.

Rear bench seat

OUTBOARD AND CENTER SEATING POSITIONS

1. Position the top tether strap ① over the seatback.
2. Secure the tether strap to the tether anchor point ② as shown.
3. Tighten the tether strap according to the manufacturer's instructions to remove any slack.

If you have any questions when installing a top tether strap, it is recommended that you visit a NISSAN dealer for this service.

⚠WARNING

Child restraint anchorages are designed to withstand only those loads imposed by correctly fitted child restraints. Under no circumstances are they to be used to attach adult seat belts, or other items or equipment to the vehicle. Doing so could damage the child restraint anchorages. The child restraint will not be properly installed using the damaged anchorage, and a child could be seriously injured or killed in a collision.

BOOSTER SEATS

For additional information on installing a booster seat in your vehicle, follow the instructions outlined in this section.

Precautions on booster seats

⚠ WARNING

If a booster seat and seat belt are not used properly, the risk of a child being injured or killed in a sudden stop or collision greatly increases:

- **Make sure the shoulder portion of the belt is away from the child's face and neck and the lap portion of the belt does not cross the stomach.**
- **Make sure the shoulder belt is not behind the child or under the child's arm.**
- **A booster seat must only be installed in a seating position that has a lap/shoulder belt.**

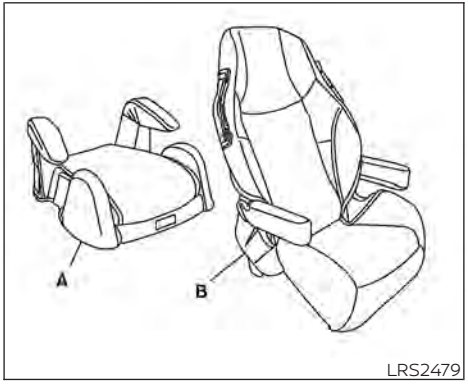

A. Low back booster seat

B. High back booster seat

Booster seats of various sizes are offered by several manufacturers. When selecting any booster seat, keep the following points in mind:

- Choose only a booster seat with a label certifying that it complies with Federal Motor Vehicle Safety Standard 213 or Canadian Motor Vehicle Safety Standard 213.
- Check the booster seat in your vehicle to be sure it is compatible with the vehicle's seat and seat belt system.

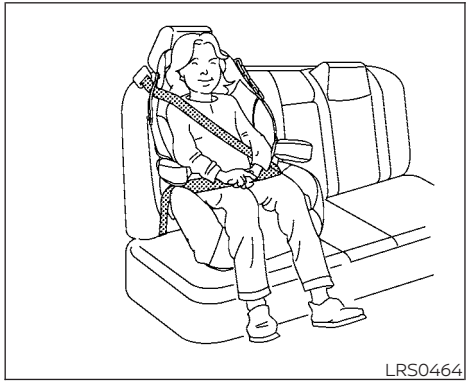

- Make sure the child's head will be properly supported by the booster seat or vehicle seat. The seatback must be at or above the center of the child's ears. For example, if a low back booster seat is chosen, the vehicle seatback must be at or above the center of the child's ears. If the seatback is lower than the center of the child's ears, a high back booster seat should be used.
- If the booster seat is compatible with your vehicle, place the child in the booster seat and check the various adjustments to be sure the booster seat is compatible with the child. Always follow all recommended procedures.

All U.S. states and Canadian provinces or territories require that infants and small children be restrained in an approved child restraint at all times while the vehicle is being operated.

The instructions in this section apply to booster seat installation in the rear seats or the front passenger seat.

Booster seat installation

⚠ WARNING

All booster seats should be installed in the rear seat. However, if you must install a booster seat in the front passenger seat, move the passenger's seat to the rearmost position.

To avoid injury to child, do not use the lap/shoulder belt in the Automatic Locking Retractor (ALR) mode when using a booster seat with the seat belts.

For additional information, see all Warnings and Cautions in the "Child safety" (P. 1-21), "Child restraints" (P. 1-23) and "Booster seats" (P. 1-43) before installing a child restraint.

Follow these steps to install a booster seat in the rear seat or in the front passenger seat:

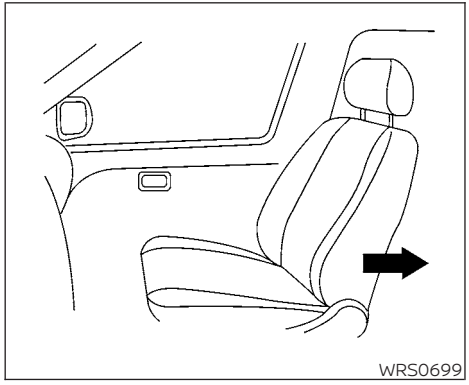

1. **If you must install a booster seat in the front seat, move the seat to the rear-most position.**
2. Position the booster seat on the seat. Only place it in a front-facing direction. Always follow the booster seat manufacturer's instructions.

Front passenger position

Rear center position

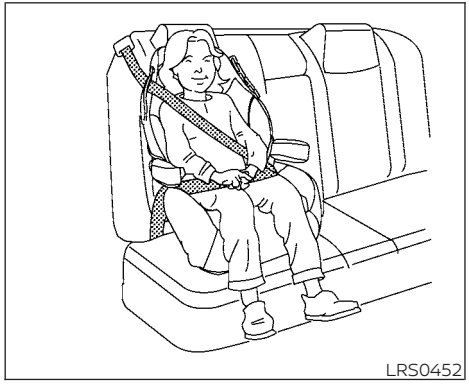

Rear outboard position

3. The booster seat should be positioned on the vehicle seat so that it is stable.

   If necessary, adjust or remove the head restraint/headrest to obtain the correct high back booster seat fit. If the head restraint/headrest is removed, store it in a secure place. **Be sure to reinstall the head restraint/headrest when the booster seat is removed.** For additional information about head restraint/headrest adjustment, removal and installation, see "Head restraints/headrests" (P. 1-8).

   If the seating position does not have an adjustable head restraint/headrest and it is interfering with the proper booster seat fit, try another seating position or a different booster seat.

4. Position the lap portion of the seat belt low and snug on the child's hips. Be sure to follow the booster seat manufacturer's instructions for adjusting the seat belt routing.

5. Pull the shoulder belt portion of the seat belt toward the retractor to take up extra slack. Be sure the shoulder belt is positioned across the top, middle portion of the child's shoulder. Be sure to follow the booster seat manufacturer's instructions for adjusting the seat belt routing.

6. Follow the warnings, cautions and instructions for properly fastening a seat belt shown in "Three-point type seat belt with retractor" (P. 1-15).

7. If the booster seat is installed in the front passenger seat, place the ignition switch in the ON position. The front passenger air bag status light OFF may or may not illuminate, depending on the size of the child and the type of booster seat being used. For additional information, see "Front passenger air bag and status light" (P. 1-57).

PRECAUTIONS ON SRS

This SRS section contains important information concerning the following systems:

- Driver and front passenger supplemental front-impact air bag (NISSAN Advanced Air Bag System)
- Front seat-mounted side-impact supplemental air bag
- Rear outboard seat-mounted side-impact supplemental air bag
- Roof-mounted curtain side-impact and rollover supplemental air bag
- Driver and front passenger supplemental knee air bag
- Seat belt with pretensioner(s) (front and rear outboard seats)

Supplemental front-impact air bag system

The NISSAN Advanced Air Bag System can help cushion the impact force to the head and chest of the driver and front passenger in certain frontal collisions.

Front seat-mounted side-impact supplemental air bag system

This system can help cushion the impact force to the chest area of the driver and front passenger in certain side-impact collisions. The side air bags are designed to inflate on the side where the vehicle is impacted.

Rear outboard seat-mounted side-impact supplemental air bag system

This system can help cushion the impact force to the chest area of the rear outboard seat passengers in certain side-impact collisions. The side air bags are designed to inflate on the side where the vehicle is impacted.

Roof-mounted curtain side-impact and rollover supplemental air bag system

This system can help cushion the impact force to the head of occupants in front and rear outboard seating positions in certain side-impact collisions. The curtain air bags are designed to inflate on the side where the vehicle is impacted. In a rollover, the curtain air bags are designed to inflate and remain inflated for a short time.

Driver and front passenger supplemental knee air bags

This system can help cushion the impact force to the driver's and front passenger's knees in certain collisions.

The SRS is designed to **supplement** the crash protection provided by the driver and front passenger and rear seat belts and is **not a substitute** for them. Seat belts should always be correctly worn and the occupant seated a suitable distance away from the steering wheel, instrument panel and door finishers. For additional information, see "Seat belts" (P. 1-12).

The supplemental air bags operate only when the ignition switch is placed in the ON position.

After placing the ignition switch in the ON position, the supplemental air bag warning light illuminates. The supplemental air bag warning light will turn off after about 7 seconds if the system is operational.

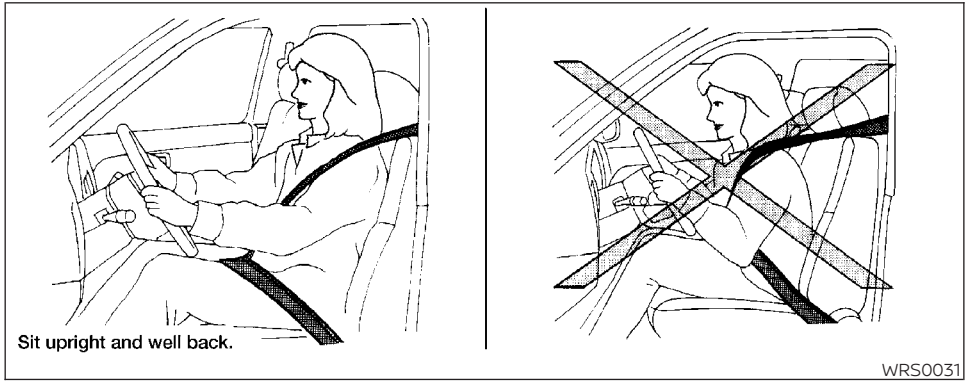

⚠ WARNING

- **The front air bags ordinarily will not inflate in the event of a side impact, rear impact, rollover, or lower severity frontal collision. Always wear your seat belts to help reduce the risk or severity of injury in various kinds of accidents**
- **The front passenger air bag and front passenger knee air bag will not inflate if the passenger air bag status light is lit. For additional information, see "Front passenger air bag and status light" (P. 1-57).**
- **The seat belts and the front air bags are most effective when you are sitting well back and upright in the seat. The front air bags inflate with great force. Even with the NISSAN Advanced Air Bag System, if you are unrestrained, leaning forward, sitting sideways or out of position in any way, you are at greater risk of injury or death in a crash. You may also receive serious or fatal injuries from the front air bag if you are up against it when it inflates. Always sit back against the seatback and as far away as practical from the steering wheel or instrument panel. Always properly use the seat belts.**
- **The driver and front passenger seat belt buckles are equipped with sensors that detect if the seat belts are fastened. The NISSAN Advanced Air Bag System monitors the severity of a collision and seat belt usage, then inflates the air bags as needed. Failure to properly wear seat belts can increase the risk or severity of injury in an accident.**
- **The front passenger seat is equipped with an occupant classification sensor (weight sensor) that turns the front passenger air bag and passenger knee air bag OFF under some conditions. This sensor is only used in this seat. Failure to be properly seated and wearing the seat belt can increase the risk or severity of injury in an accident. For additional information, see "Front passenger air bag and status light" (P. 1-57).**
- **Keep hands on the outside of the steering wheel. Placing them inside the steering wheel rim could increase the risk that they are injured when the front air bag inflates.**

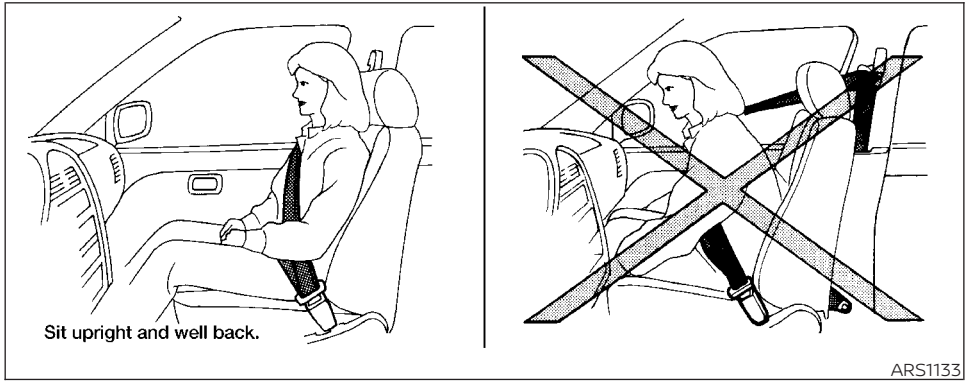

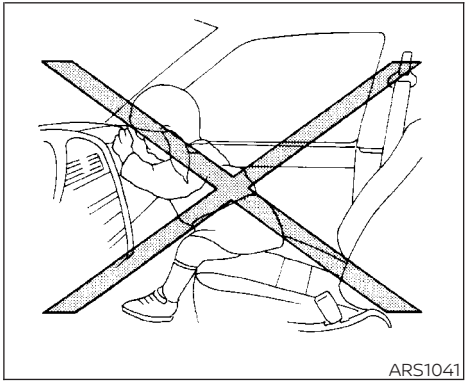

⚠ WARNING

- **Never let children ride unrestrained or extend their hands or face out of the window. Do not attempt to hold them in your lap or arms. Some examples of dangerous riding positions are shown in the illustrations.**

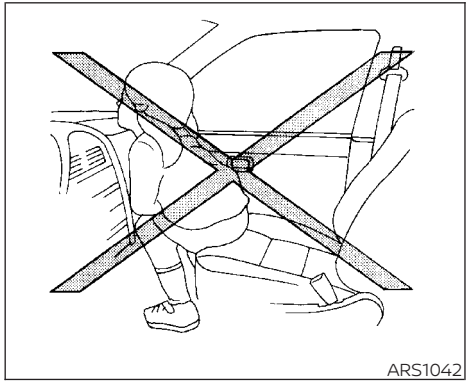
ARS1042

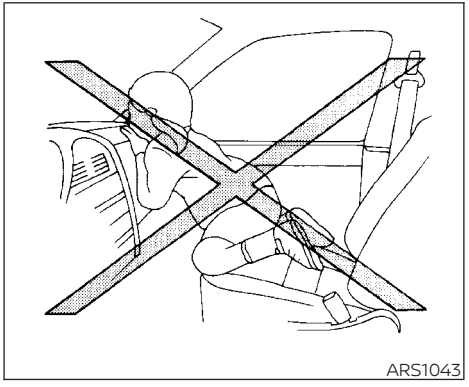
ARS1043

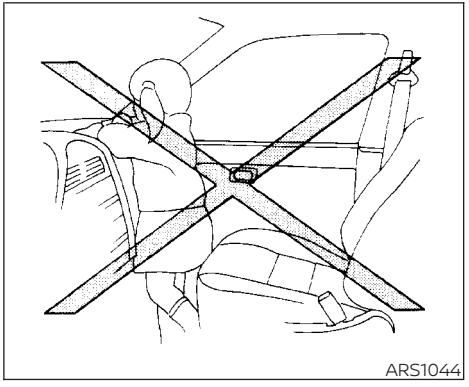
ARS1044

⚠ WARNING

- **Children may be severely injured or killed when the front air bags, side air bags or curtain air bags inflate if they are not properly restrained. Preteens and children should be properly restrained in the rear seat, if possible.**

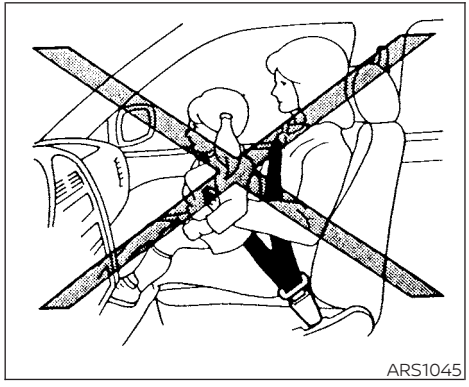
ARS1045

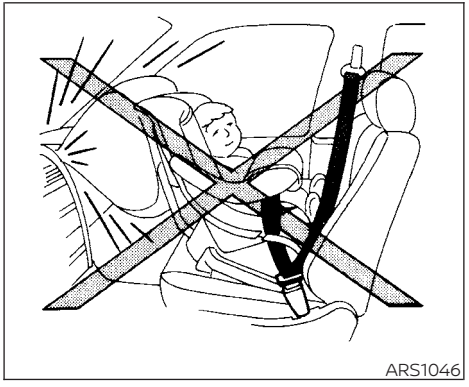
ARS1046

⚠ WARNING

- **Even with the NISSAN Advanced Air Bag System, never install a rear-facing child restraint in the front seat. An inflating front air bag could seriously injury or kill your child. For additional information, see "Child restraints" (P. 1-23).**

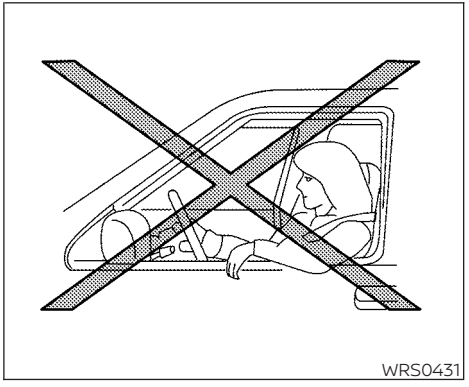
WRS0431

⚠ WARNING

Front and rear outboard seat-mounted side-impact supplemental air bags and roof-mounted curtain side-impact and rollover supplemental air bags:

- **The side air bags and curtain air bags ordinarily will not inflate in the event of a frontal impact, rear impact, or lower severity side collision. Always wear your seat belts to help reduce the risk or severity of injury in various kinds of accidents.**

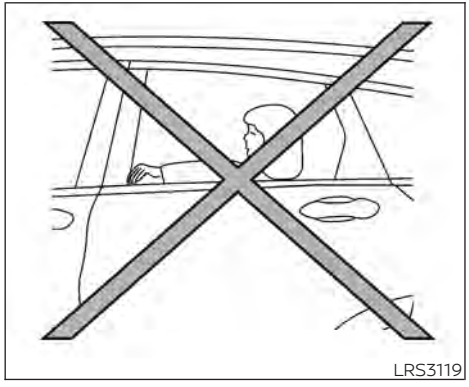

LRS3119

⚠ WARNING

- **The seat belts, the side air bags and curtain air bags are most effective when you are sitting well back and upright in the seat with both feet on the floor. The side air bag and curtain air bag inflate with great force. Do not allow anyone to place their hand, leg or face near the side air bag on the side of the seatback of the front and rear seat or near the side roof rails. Do not allow anyone sitting in the front seats or rear outboard seats to extend their hand out of the window or lean against the door. Some examples of dangerous riding positions are shown in the previous illustrations.**

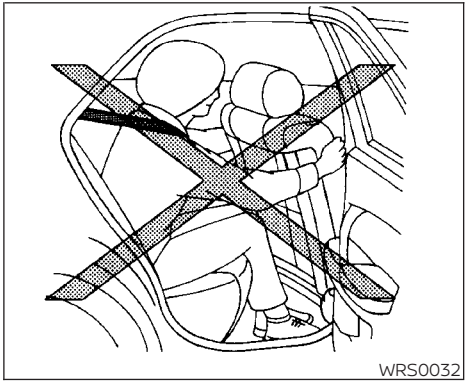

WRS0032

⚠ WARNING

- **When sitting in the rear seat, do not hold onto the seatback of the front seat. If the side air bag inflates, you may be seriously injured. Be especially careful with children, who should always be properly restrained. Some examples of dangerous riding positions are shown in the illustrations.**
- **Do not use seat covers on the front or rear seatbacks. They may interfere with side air bag inflation.**

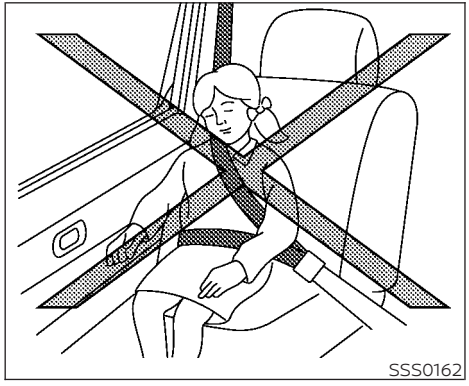
SSS0162

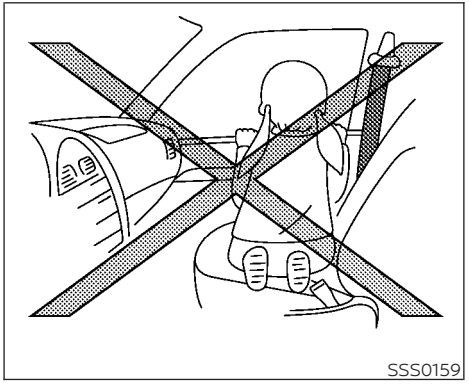
SSS0159

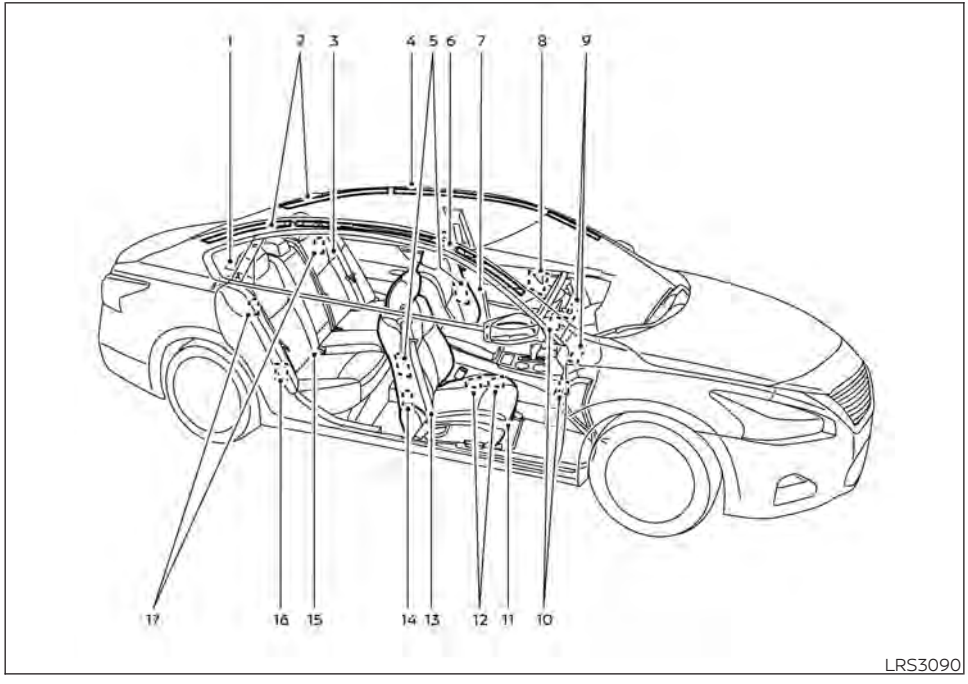

NISSAN Advanced Air Bag System

1. Top tether strap anchor
2. Roof-mounted curtain side-impact and rollover supplemental air bag inflators
3. Rear seat belts
4. Roof-mounted curtain side-impact and rollover supplemental air bag
5. Front seat-mounted side-impact supplemental air bag
6. Head restraints/headrests
7. Front seat belts
8. Side-impact pressure sensor (driver's side shown; front passenger's side similar)
9. Supplemental front-impact air bags
10. Driver and front passenger supplemental knee air bags
11. Seats
12. Occupant classification sensor (weight sensor)
13. Seat belt with pretensioner(s) (front seats shown; rear outboard seats similar)
14. Satellite sensors (passenger’s side shown; driver’s side similar)
15. LATCH (Lower Anchors and Tethers for CHildren) system

16. Satellite sensors (passenger's side shown; driver's side similar)
17. Rear outboard seat-mounted side-impact supplemental air bags

⚠ WARNING

To ensure proper operation of the passenger's NISSAN Advanced Air Bag System, please observe the following items.

- **Do not allow a passenger in the rear seat to push or pull on the seatback pocket.**
- **Do not place heavy loads heavier than 9.1 lbs. (4 kg) on the seatback, head restraint/headrest or in the seatback pocket.**
- **Make sure that there is nothing pressing against the rear of the seatback, such as a child restraint installed in the rear seat or an object stored on the floor.**
- **Make sure that there is no object placed under the front passenger seat.**
- **Make sure that there is no object placed between the seat cushion and center console or between the seat cushion and the door.**
- **If a forward facing child restraint is installed in the front passenger seat, do not position the front passenger seat so the child restraint contacts the instrument panel. If the child restraint does contact the instrument panel, the system may determine the seat is occupied and the passenger air bag and front passenger supplemental knee air bag may deploy in a collision. Also the front passenger air bag status light may not illuminate. For additional information about installing and using child restraints, see "Child restraints" (P. 1-23).**
- **Confirm the operating condition with the front passenger air bag status light.**
- **If you notice that the front passenger air bag status light is not operating as described in this section, get the occupant classification system checked. It is recommended that you visit a NISSAN dealer for this service.**
- **Until you have confirmed with a dealer that your passenger seat occupant classification system is working properly, position the occupants in the rear seating positions.**
- **Do not position the front passenger seat so it contacts the rear seat. If the front seat does contact the rear seat, the air bag system may determine a sensor malfunction has occurred and the front passenger air bag status light may illuminate and the supplemental air bag warning light may flash.**

This vehicle is equipped with the NISSAN Advanced Air Bag System for the driver and front passenger seats. This system is designed to meet certification requirements under U.S. regulations. It is also permitted in Canada. **However, all of the information, cautions and warnings in this manual still apply and must be followed.**

The driver supplemental front-impact air bag is located in the center of the steering wheel. The front passenger supplemental front-impact air bag is mounted in the dashboard above the glove box. The front air bags are designed to inflate in higher severity frontal collisions, although they may inflate if the forces in another type of collision are similar to those of a higher severity frontal impact. They may not inflate in certain frontal collisions. Vehicle damage (or lack of it) is not always an indication of proper front air bag system operation.

The NISSAN Advanced Air Bag System monitors information from the crash zone sensor, the Air bag Control Unit (ACU), seat belt buckle sensors and occupant classification sensor (weight sensor). Inflator operation is based on the severity of a collision and seat belt usage for the driver. For the front passenger, the occupant classification sensor is also monitored. Based on information from the sensor, only one front air bag may inflate in a crash, depending on the crash severity and whether the front occupants are belted or unbelted. Additionally, the front passenger air bag and front passenger supplemental knee air bag may be automatically turned off under some conditions, depending on the weight detected on the front passenger seat and how the seat belt is used. If the front passenger air bag and front passenger supplemental knee air bag are OFF, the front passenger air bag status light will be illuminated. For additional information, see "Front passenger air bag and status light" (P. 1-57). One front air bag inflating does not indicate improper performance of the system.

If you have any questions about your air bag system, it is recommended that you visit a NISSAN dealer to obtain information about the system. If you are considering modification of your vehicle due to a disability, you may also contact NISSAN. Contact information is contained in the front of this Owner's Manual.

When a front air bag inflates, a fairly loud noise may be heard, followed by the release of smoke. This smoke is not harmful and does not indicate a fire. Care should be taken to not inhale it, as it may cause irritation and choking. Those with a history of a breathing condition should get fresh air promptly.

Front air bags, along with the use of seat belts, help to cushion the impact force on the face and chest of the front occupants. They can help save lives and reduce serious injuries. However, an inflating front air bag may cause facial abrasions or other injuries. Front air bags do not provide restraint to the lower body.

Even with NISSAN Advanced Air Bags, seat belts should be correctly worn and the driver and front passenger seated upright as far as practical away from the steering wheel or instrument panel. The front air bags inflate quickly in order to help protect the front occupants. Because of this, the force of the front air bag inflating can increase the risk of injury if the occupant is too close to, or is against, the front air bag module during inflation.

The front air bags deflate quickly after a collision.

The front air bags operate only when the ignition switch is placed in the ON position.

After placing the ignition switch in the ON position, the supplemental air bag warning light illuminates. The supplemental air bag warning light will turn off after about 7 seconds if the system is operational.

Front passenger air bag and status light

⚠WARNING

The front passenger air bag and front passenger supplemental knee air bag are designed to automatically turn OFF under some conditions. Read this section carefully to learn how it operates. Proper use of the seat, seat belt, and child restraints is necessary for most effective protection. Failure to follow all instructions in this manual concerning the use of seats, seat belts, and child restraints can increase the risk or severity of injury in an accident.

Status light

The front passenger seat is equipped with an occupant classification sensor (weight sensor) that turns the front passenger air bag and front passenger supplemental knee air bag on or off depending on the weight applied to the front passenger seat. The status of the front passenger air bag and front passengers supplemental knee air bag (ON or OFF) is indicated by the front passenger air bag status light OFF which is located on the instrument panel.

After the ignition switch is placed in the "ON" position, the front passenger air bag status light on the instrument panel illuminates for about 7 seconds and then turns off or remains illuminated depending on the front passenger seat occupied status. The light operates as follows:

CONDITION	DESCRIPTION	PASSENGER AIR BAG STATUS LIGHT (OFF)	FRONT PASSENGER AIR BAG AND FRONT PASSENGER SUPPLEMENTAL KNEE AIR BAG STATUS
Empty	Empty front passenger seat	ON (illuminated)	INHIBITED
Nobody/Somebody	Bag or Child or Child Restraint or Small Adult in front passenger seat	ON (illuminated)	INHIBITED
Adult	Adult in the front passenger seat	OFF (dark)	ACTIVATED

In addition to the above, certain objects placed on the front passenger seat may also cause the light to operate as described above depending on their weight.

For additional information, see "Normal operation" (P. 1-59) and "Troubleshooting" (P. 1-60).

Front passenger air bag

The front passenger air bag and front passenger supplemental knee air bag is designed to automatically turn OFF when the vehicle is operated under some conditions as described below in accordance with U.S. regulations. If the front passenger air bag and front passenger supplemental knee air bag is OFF, it will not inflate in a crash. The driver air bag and other air bags in your vehicle are not part of this system.

The purpose of the regulation is to help reduce the risk of injury or death from an inflating air bag to certain front passenger seat occupants, such as children, by requiring the air bags to be automatically turned OFF. Certain sensors are used to meet the requirements.

The occupant classification sensor in this vehicle is a weight sensor. It is designed to detect an occupant and objects on the seat by weight. For example, if a child is in the front passenger seat, the NISSAN Advanced Air Bag System is designed to turn the front passenger air bag and front passenger supplemental knee air bag OFF in accordance with the regulations. Also, if a child restraint of the type specified in the regulations is on the seat, its weight and the child's weight can be detected and cause the air bag to turn OFF.

Front passenger seat adult occupants who are properly seated and using the seat belt as outlined in this manual should not cause the front passenger air bag and front passenger supplemental knee air bag to be automatically turned OFF. For small adults it may be turned OFF, however if the occupant takes his/her weight off the seat cushion (for example, by not sitting upright, by sitting on an edge of the seat, or by otherwise being out of position), this could cause the sensor to turn the air bags OFF. Always be sure to be seated and wearing the seat belt properly for the most effective protection by the seat belt and supplemental air bag.

NISSAN recommends that pre-teens and children be properly restrained in a rear seat. NISSAN also recommends that appropriate child restraints and booster seats be properly installed in a rear seat. If this is not possible, the occupant classification sensor is designed to operate as described above to turn the front passenger air bag and front passenger supplemental knee air bag OFF for specified child restraints as required by the regulations. Failing to properly secure child restraints and to use the ALR mode may allow the restraint to tip or move in a collision or sudden stop. This can also result in the passenger air bag and front passenger supplemental knee air bag inflating in a crash instead of being OFF. For additional information about proper use and installation, see "Child restraints" (P. 1-23).

If the front passenger seat is not occupied, the front passenger air bag and front passenger supplemental knee air bag are designed not to inflate in a crash. However, heavy objects placed on the seat could result in air bag inflation, because of the object's weight detected by the occupant classification sensor. Other conditions could also result in air bag inflation, such as if a child is standing on the seat, or if two children are on the seat, contrary to the instructions in this manual. Always be sure that you and all vehicle occupants are seated and restrained properly.

Using the front passenger air bag status light, you can monitor when the front passenger air bag and front passenger supplemental knee air bag are automatically turned OFF.

If an adult occupant is in the seat but the front passenger air bag status light is illuminated (indicating that the front passenger air bag and front passenger supplemental knee air bag are OFF), it could be that the person is a small adult, or is not sitting on the seat properly or not using the seat belt properly.

If a child restraint must be used in the front seat, the front passenger air bag status light may or may not be illuminated, depending on the size of the child and the type of child restraint being used. If the air bag status light is not illuminated (indicating that the air bag might inflate in a crash), it could be that the child restraint or seat belt is not being used properly. Make sure that the child restraint is installed properly, the seat belt is used properly and the occupant is positioned properly. If the air bag status light is still not illuminated, reposition the occupant or child restraint in a rear seat.

If the front passenger air bag status light will not illuminate even though you believe that the child restraint, the seat belts and the occupant are properly positioned, it is recommended that you take your vehicle to a NISSAN dealer. A NISSAN dealer can check system status by using a special tool. However, until you have confirmed with a dealer that your air bag is working properly, reposition the occupant or child restraint in a rear seat.

The NISSAN Advanced Air Bag System and front passenger air bag status light will take a few seconds to register a change in the front passenger seat status. This is normal system operation and does not indicate a malfunction.

If a malfunction occurs in the front passenger air bag system, the supplemental air bag warning light , located in the meter and gauges area of the instrument panel, will be illuminated (blinking or steadily lit). Have the system checked. It is recommended that you visit a NISSAN dealer for this service.

Normal operation

In order for the occupant classification sensor system to classify the front passenger based on weight, please follow the precautions and steps outlined below:

Precautions

- Make sure that there are no objects weighing over 9.1 lbs. (4 kg) hanging on the seat or placed in the seatback pocket.
- Make sure that a child restraint or other object is not pressing against the rear of the seatback.
- Make sure that a rear passenger is not pushing or pulling on the back of the front passenger seat.
- Make sure that the front passenger seat or seatback is not forced back against an object on the seat or floor behind it.
- Make sure that there is no object placed under the front passenger seat.

Steps

1. Adjust the seat as outlined in the "Seats" (P. 1-2) section of this manual. Sit upright, leaning against the seatback, and centered on the seat cushion with your feet comfortably extended to the floor.
2. Make sure there are no objects on your lap.
3. Fasten the seat belt as outlined in the "Seat belts" (P. 1-12) section of this manual. Front passenger seat belt buckle status is monitored by the occupant classification system, and is used as an input to determine occupancy status. So, it is highly recommended that the front passenger fasten their seat belt.

4. Remain in this position for 30 seconds allowing the system to classify the front passenger before the vehicle is put into motion.
5. Ensure proper classification by checking the front passenger air bag status light.

NOTE:

This vehicle's occupant classification sensor system generally keeps the classification locked during driving, so it is important that you confirm that the front passenger is properly classified prior to driving. However, the occupant classification sensor may recalculate the weight of the occupant under some conditions (both while driving and when stopped), so front passenger seat occupants should continue to remain seated as outlined above.

Troubleshooting

If you think the front passenger air bag status light is incorrect:

1. If the light is ON with an adult occupying the front passenger seat:

- Occupant is a small adult — the air bag light is functioning as intended. The front passenger air bag and front passenger supplemental knee air bag are suppressed.

However, if the occupant is not a small adult, then this may be due to the following conditions that may be interfering with the weight sensors:

- Occupant is not sitting upright, leaning against the seatback, and centered on the seat cushion with his/her feet comfortably extended to the floor.
- A child restraint or other object pressing against the rear of the seatback.
- A rear passenger pushing or pulling on the back of the front passenger seat.
- Forcing the front seat or seatback against an object on the seat or floor behind it.
- An object placed under the front passenger seat.
- An object placed between the seat cushion and center console or between the seat cushion and the door.

If the vehicle is moving, please come to a stop when it is safe to do so. Check and correct any of the above conditions. Restart the vehicle and wait 1 minute.

NOTE:

A system check will be performed during which the front passenger air bag status light will remain lit for about 7 seconds initially.

If the light is still ON after this, the person should be advised not to ride in the front passenger seat and the vehicle should be checked as soon as possible. It is recommended that you visit a NISSAN dealer for this service.

2. If the light is OFF with a small adult, child or child restraint occupying the front passenger seat.

   This may be due to the following conditions that may be interfering with the weight sensors:

- Small adult or child is not sitting upright, leaning against the seatback, and centered on the seat cushion with his/her feet comfortably extended to the floor.
- The child restraint is not properly installed, as outlined in the "Child restraints" section of this manual.
- An object weighing over 9.1 lbs. (4 kg) hanging on the seat or placed in the seatback pocket.

- A child restraint or other object pressing against the rear of the seatback.
- A rear passenger pushing or pulling on the back of the front passenger seat.
- Forcing the front seat or seatback against an object on the seat or floor behind it.
- An object placed under the front passenger seat.
- An object placed between the seat cushion and center console.

If the vehicle is moving, please come to a stop when it is safe to do so. Check and correct any of the above conditions. Restart the vehicle and wait 1 minute.

NOTE:

A system check will be performed during which the front passenger air bag status light will remain lit for about 7 seconds initially.

If the light is still OFF after this, the small adult, child or child restraint should be repositioned in the rear seat and the vehicle should be checked as soon as possible. It is recommended that you visit a NISSAN dealer for this service.

3. If the light is OFF with no front passenger and no objects on the front passenger seat, the vehicle should be checked. It is recommended that you visit a NISSAN dealer as soon as possible.

Other supplemental front-impact air bag precautions

⚠ WARNING

- **Do not place any objects on the steering wheel pad or on the instrument panel. Also, do not place any objects between any occupant and the steering wheel or instrument panel. Such objects may become dangerous projectiles and cause injury if the front air bags inflate.**
- **Immediately after inflation, several front air bag system components will be hot. Do not touch them; you may severely burn yourself.**
- **No unauthorized changes should be made to any components or wiring of the supplemental air bag system. This is to prevent accidental inflation of the supplemental air bag or damage to the supplemental air bag system.**
- **Do not make unauthorized changes to your vehicle's electrical system, suspension system or front end structure. This could affect proper operation of the front air bag system.**
- **Tampering with the front air bag system may result in serious personal injury. Tampering includes changes to the steering wheel and the instrument panel assembly by placing material over the steering wheel pad and above the instrument panel or by installing additional trim material around the air bag system.**
- **Removing or modifying the front passenger seat may affect the function of the air bag system and result in serious personal injury.**

- **Modifying or tampering with the front passenger seat may result in serious personal injury. For example, do not change the front seats by placing material on the seat cushion or by installing additional trim material, such as seat covers, on the seat that are not specifically designed to assure proper air bag operation. Additionally, do not stow any objects under the front passenger seat or the seat cushion and seatback. Such objects may interfere with the proper operation of the occupant classification sensor (weight sensor).**
- **No unauthorized changes should be made to any components or wiring of the seat belt system. This may affect the front air bag system. Tampering with the seat belt system may result in serious personal injury.**
- **It is recommended that you visit a NISSAN dealer for work on and around the front air bag system. It is also recommended that you visit a NISSAN dealer for installation of electrical equipment. The Supplemental Restraint System (SRS) wiring harnesses* should not be modified or disconnected. Unauthorized electrical test equipment and probing devices should not be used on the air bag system.**
- **A cracked windshield should be replaced immediately by a qualified repair facility. A cracked windshield could affect the function of the supplemental air bag system.**

***The SRS wiring harness connectors are yellow and orange for easy identification.**

When selling your vehicle, we request that you inform the buyer about the front air bag system and guide the buyer to the appropriate sections in this Owner's Manual.

Front and rear outboard seat-mounted side-impact supplemental air bag and roof-mounted curtain side-impact and rollover supplemental air bag systems

The side air bags are located in the outside of the seatback of the front and rear outboard seats. The curtain air bags are located in the side roof rails. **All of the information, cautions and warnings in this manual must be followed.** The side air bags and curtain air bags are designed to

inflate in higher severity side collisions, although they may inflate if the forces in another type of collision are similar to those of a higher severity impact. They are designed to inflate on the side where the vehicle is impacted. They may not inflate in certain side collisions.

Curtain air bags are also designed to inflate in certain types of rollover collisions or near rollovers. As a result, certain vehicle movements (for example, during severe off-roading) may cause the curtain air bags to inflate.

Vehicle damage (or lack of it) is not always an indication of proper side air bag and curtain air bag operation.

When the side air bags and curtain air bags inflate, a fairly loud noise may be heard, followed by the release of smoke. This smoke is not harmful and does not indicate a fire. Care should be taken not to inhale it, as it may cause irritation and choking. Those with a history of a breathing condition should get fresh air promptly.

Side air bags, along with the use of seat belts, help to cushion the impact force on the chest and pelvic area of the front and rear outboard occupants. Curtain air bags help to cushion the impact force to the head of occupants in the front and rear outboard seating positions. They can help save lives and reduce serious injuries. However, an inflating side air bag and curtain air bag may cause abrasions or other injuries. Side air bags and curtain air bags do not provide restraint to the lower body.

The seat belts should be correctly worn and the driver, front passenger and rear outboard occupants seated upright as far as practical away from the side air bag. Rear seat passengers should be seated as far away as practical from the door finishers and side roof rails. The side air bags and curtain air bags inflate quickly in order to help protect the occupants. Because of this, the force of the side air bag and curtain air bag inflating can increase the risk of injury if the occupant is too close to, or is against, these air bag modules during inflation. The side air bag will deflate quickly after the collision is over.

The curtain air bag will remain inflated for a short time.

The side air bags and curtain air bags operate only when the ignition switch is placed in the ON position.

After placing the ignition switch in the ON position, the supplemental air bag warning light illuminates. The supplemental air bag warning light will turn off after about 7 seconds if the system is operational.

⚠ WARNING

- **Do not place any objects near the seatback of the front and rear seats. Also, do not place any objects (an umbrella, bag, etc.) between the front and rear door finisher and the front and rear seat. Such objects may become dangerous projectiles and cause injury if a side air bag inflate.**
- **Right after inflation, several side air bag and curtain air bag system components will be hot. Do not touch them; you may severely burn yourself.**
- **No unauthorized changes should be made to any components or wiring of the side air bag and curtain air bag systems. This is to prevent damage to or accidental inflation of the side air bag and curtain air bag or damage to the side air bag and curtain air bag systems.**

- **Do not make unauthorized changes to your vehicle's electrical system, suspension system or side panel. This could affect proper operation of the side air bag and curtain air bag systems.**
- **Tampering with the side air bag system may result in serious personal injury. For example, do not change the front and rear seats by placing material near the seatbacks or by installing additional trim material, such as seat covers, around the side air bag.**
- **It is recommended that you visit a NISSAN dealer for work on and around the side air bag and curtain air bag. It is also recommended that you visit a NISSAN dealer for installation of electrical equipment. The SRS wiring harnesses* should not be modified or disconnected. Unauthorized electrical test equipment and probing devices should not be used on the side air bag or curtain air bag system.**

*** The SRS wiring harness connectors are yellow and orange for easy identification.**

When selling your vehicle, we request that you inform the buyer about the side air bag and curtain air bag systems and guide the buyer to the appropriate sections in this Owner's Manual.

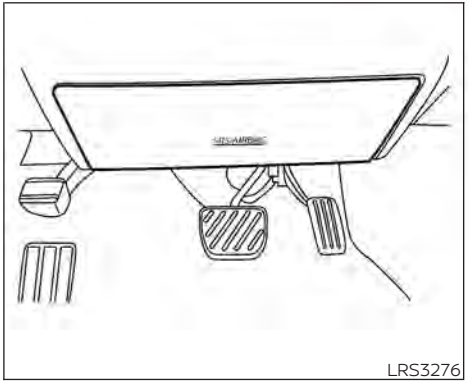

Driver's side

Driver and front passenger supplemental knee air bag

The knee air bag is located in the knee bolster, on the driver's and front passenger's side. **All of the information, cautions and warnings in this manual apply and must be followed.** The knee air bag is designed to inflate in higher severity frontal collisions, although it may inflate if the forces in another type of collision are similar to those of a higher severity frontal impact. It may not inflate in certain collisions.

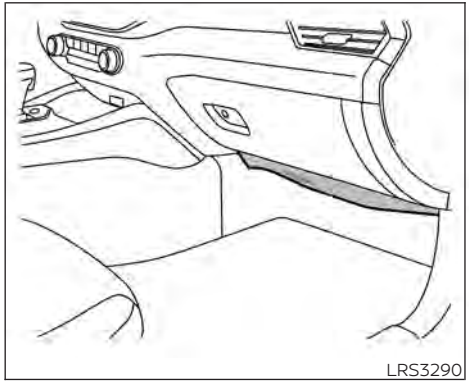

Front passenger's side

Vehicle damage (or lack of it) is not always an indication of proper knee air bag operation.

When the knee air bag inflates, a fairly loud noise may be heard, followed by release of smoke. This smoke is not harmful and does not indicate a fire. Care should be taken not to inhale it, as it may cause irritation and choking. Those with a history of a breathing condition should get fresh air promptly.

The knee air bag helps to cushion the impact force on the knees of the driver and passenger. It can help reduce serious injuries. However, an inflating knee air bag may cause abrasions or other injuries. The knee air bag provides restraint to the lower body.

The knee air bag inflates quickly in order to help protect the occupants. Because of this, the force of the knee air bag inflating can increase the risk of injury if the occupant is too close to, or is against, this air bag module during inflation. The knee air bag will deflate quickly after the collision is over OR the knee air bag will remain inflated for a short time.

The knee air bag operates only when the ignition switch is placed in the ON position.

After placing the ignition switch in the ON position, the supplemental air bag warning light illuminates. The supplemental air bag warning light will turn off after about 7 seconds if the system is operational.

⚠ WARNING

- **Do not place any objects between the knee bolster and the driver's or passenger's seat. Such objects may become dangerous projectiles and cause injury if a knee air bag inflates.**
- **Right after inflation, the knee air bag system components will be hot. Do not touch them; you may severely burn yourself.**
- **No unauthorized changes should be made to any components or wiring of the knee air bag system. This is to prevent damage to or accidental inflation of the knee air bag system.**
- **Do not make unauthorized changes to your vehicle's electrical system or suspension system. This could affect proper operation of the knee air bag system.**
- **Tampering with the knee air bag system may result in serious personal injury. For example, do not change the driver or passenger knee bolster or install additional trim material around the knee air bag.**

- **It is recommended that you visit a NISSAN dealer for work on and around the knee air bag. It is also recommended that you visit a NISSAN dealer for installation of electrical equipment. The SRS wiring harnesses* should not be modified or disconnected. Unauthorized electrical test equipment and probing devices should not be used on the knee air bag system.**

***The SRS wiring harness or connectors are yellow or orange for easy identification.**

When selling your vehicle, we request that you inform the buyer about the knee air bag system and guide the buyer to the appropriate sections in this manual.

Seat belt with pretensioner(s) (front and rear outboard seats)

⚠ WARNING

- **The pretensioner(s) cannot be reused after activation. They must be replaced together with the retractor and buckle as a unit.**
- **If the vehicle becomes involved in a collision but pretensioner(s) are not activated, be sure to have the pretensioner system checked and, if necessary, replaced. It is recommended that you visit a NISSAN dealer for this service.**
- **No unauthorized changes should be made to any components or wiring of the pretensioner system. This is to prevent damage to or accidental activation of the pretensioner(s). Tampering with the pretensioner system may result in serious personal injury.**
- **It is recommended that you visit a NISSAN dealer for work on and around the pretensioner system. It is also recommended that you visit a NISSAN dealer for installation of electrical equipment. Unauthorized electrical test equipment and probing devices should not be used on the pretensioner system.**
- **If you need to dispose of the pretensioner(s) or scrap the vehicle, it is recommended that you visit a NISSAN dealer for this service. Incorrect disposal procedures could cause personal injury.**

The pretensioner system may activate with the supplemental air bag system in certain types of collisions. Working with the seat belt retractor, the pretensioner(s) help tighten the seat belt when the vehicle becomes involved in certain types of collisions, helping to restrain front and rear outboard seat occupants.

The pretensioner(s) are encased within the seat belt retractor and to the seat belt anchor affixed to the floor of the vehicle. These seat belts are used the same way as conventional seat belts.

When pretensioner(s) activate, smoke is released and a loud noise may be heard. This smoke is not harmful and does not indicate a fire. Care should be taken not to inhale it, as it may cause irritation and choking. Those with a history of a breathing condition should get fresh air promptly.

After the pretensioner(s') activation, load limiters allow the seat belt to release webbing (if necessary) to reduce forces against the chest.

The supplemental air bag warning light is used to indicate malfunctions in the pretensioner system. For additional information, see "Supplemental air bag warning light" (P. 1-67). If the operation of the supplemental air bag warning light indicates there is a malfunction, have the system checked. It is recommended that you visit a NISSAN dealer for this service.

When selling your vehicle, we request that you inform the buyer about the pretensioner system and guide the buyer to the appropriate sections in this Owner's Manual.

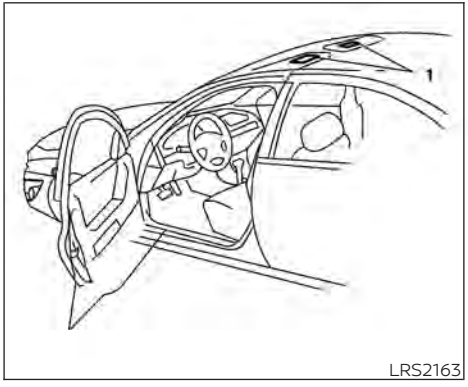

1. SRS air bag warning labels (located on the sun visors)

SUPPLEMENTAL AIR BAG WARNING LABELS

Warning labels about the supplemental front-impact air bag system are placed in the vehicle as shown in the illustration.

WARNING

Do not use a rear-facing child restraint on a seat protected by an air bag in front of it. If the air bag deploys, it may cause serious injury or death.

SUPPLEMENTAL AIR BAG WARNING LIGHT

The supplemental air bag warning light, displaying in the instrument panel, monitors the circuits for the air bag systems, pretensioner(s) and all related wiring. When the ignition switch is placed in the ON position, the supplemental air bag warning light illuminates for about 7 seconds and then turns off. This means the system is operational.

If any of the following conditions occur, the front air bag, side air bag, curtain air bag, knee air bag and pretensioner systems need servicing:

- The supplemental air bag warning light remains on after approximately 7 seconds.
- The supplemental air bag warning light flashes intermittently.
- The supplemental air bag warning light does not come on at all.

Under these conditions, the front air bag, side air bag, curtain air bag, knee air bag or pretensioner systems may not operate properly. They must be checked and repaired. It is recommended that you visit a NISSAN dealer for this service.

⚠ WARNING

If the supplemental air bag warning light is on, it could mean that the front air bag, side air bag, curtain air bag, knee air bag and/or pretensioner systems will not operate in an accident. To help avoid injury to yourself or others, have your vehicle checked as soon as possible. It is recommended that you visit a NISSAN dealer for this service.

Repair and replacement procedure

The front air bags, side air bags, curtain air bags, knee air bags and pretensioner(s) are designed to inflate on a one-time-only basis. As a reminder, unless it is damaged, the supplemental air bag warning light remains illuminated after inflation has occurred. These systems should be repaired and/or replaced as soon as possible. It is recommended that you visit a NISSAN dealer for this service.

When maintenance work is required on the vehicle, the front air bags, side air bags, curtain air bags, knee air bags, pretensioner(s) and related parts should be pointed out to the person performing the maintenance. The ignition switch should always be placed in the LOCK position when working under the hood or inside the vehicle.

⚠ WARNING

- **Once a front air bag, side air bag, curtain air bag or knee air bag has inflated, the air bag module will not function again and must be replaced. Additionally, the activated pretensioner(s) must also be replaced. The air bag module and pretensioner(s) should be replaced. It is recommended that you visit a NISSAN dealer for this service. However, the air bag module and pretensioner(s) cannot be repaired.**
- **The front air bag, side air bag, curtain air bag, knee air bag systems and the pretensioner system should be inspected if there is any damage to the front end or side portion of the vehicle. It is recommended that you visit a NISSAN dealer for this service.**
- **If you need to dispose of the supplemental air bag or pretensioner systems or scrap the vehicle, it is recommended that you contact a NISSAN dealer for this service. Incorrect disposal procedures could cause personal injury.**

- **If there is an impact to your vehicle from any direction, your Occupant Classification Sensor (OCS) should be checked to verify it is still functioning correctly. It is recommended that you visit a NISSAN dealer for this service. The OCS should be checked even if no air bags deploy as a result of the impact. Failure to verify proper OCS function may result in an improper air bag deployment resulting in injury or death.**

2 Instruments and controls

Instrument panel 2-2
Meters and gauges 2-4
Speedometer and odometer 2-4
Tachometer 2-6
Engine coolant temperature gauge 2-6
Fuel gauge 2-7
Distance To Empty (DTE) 2-8
Variable Compression Turbo (if so equipped) 2-8
Warning lights, indicator lights and audible reminders 2-9
Checking lights 2-10
Warning/Indicator lights (red) 2-10
Warning/Indicator lights (yellow) 2-12
Warning/Indicator lights (other) 2-17
Audible reminders 2-18
Vehicle information display- 5 inch (13 cm) Type A (if so equipped) 2-18
How to use the vehicle information display 2-19
Startup display 2-19
Resetting the drive computer 2-20
Oil control system (if so equipped) 2-20
Settings 2-21
Vehicle information display warnings and indicators 2-28
Vehicle information display —7 inch (18 cm) Type B (if so equipped) 2-34
How to use the vehicle information display 2-35
Startup display 2-35
Resetting the drive computer 2-35
Oil control system (if so equipped) 2-36
Settings 2-37
Vehicle information display warnings and indicators 2-45
Security systems 2-52
Vehicle security system 2-52
NISSAN Vehicle Immobilizer System 2-54
Wiper and washer switch 2-55
Switch operation 2-55
Rear window and outside mirror (if so equipped) defroster switch 2-56
Headlight and turn signal switch 2-57
Headlight control switch 2-57
LED Daytime Running Lights (DRL) system (if so equipped) 2-62
Instrument brightness control 2-62
Turn signal switch 2-63
Fog light switch (if so equipped) 2-63
Horn 2-64

Heated seat switches (if so equipped) 2-64
Heated steering wheel switch (if so equipped) . . 2-65
Steering Assist switch (for vehicles with ProPILOT Assist) (if so equipped) 2-66
Emergency call (SOS) button (if so equipped) . . . 2-67
Rear Door Alert 2-67
Power outlet 2-69
USB/iPod® charging port (if so equipped) 2-70
Extended storage switch 2-70
Storage 2-71
Front-door pockets 2-71
Seatback pockets (if so equipped) 2-71
Glove box 2-72
Console box 2-72
Overhead sunglasses storage 2-73
Cup holders 2-73
Windows 2-75
Power windows 2-75
Moonroof (if so equipped) 2-77
Power moonroof 2-77
Interior lights 2-79
Map lights 2-80
Personal lights 2-80
Trunk light 2-80
HomeLink® Universal Transceiver (if so equipped) 2-81
Programming HomeLink® 2-81
Programming HomeLink® for Canadian customers and gate openers 2-83
Operating the HomeLink® Universal Transceiver 2-84
Programming trouble-diagnosis 2-84
Clearing the programmed information 2-84
Reprogramming a single HomeLink® button 2-84
If your vehicle is stolen 2-85

INSTRUMENT PANEL

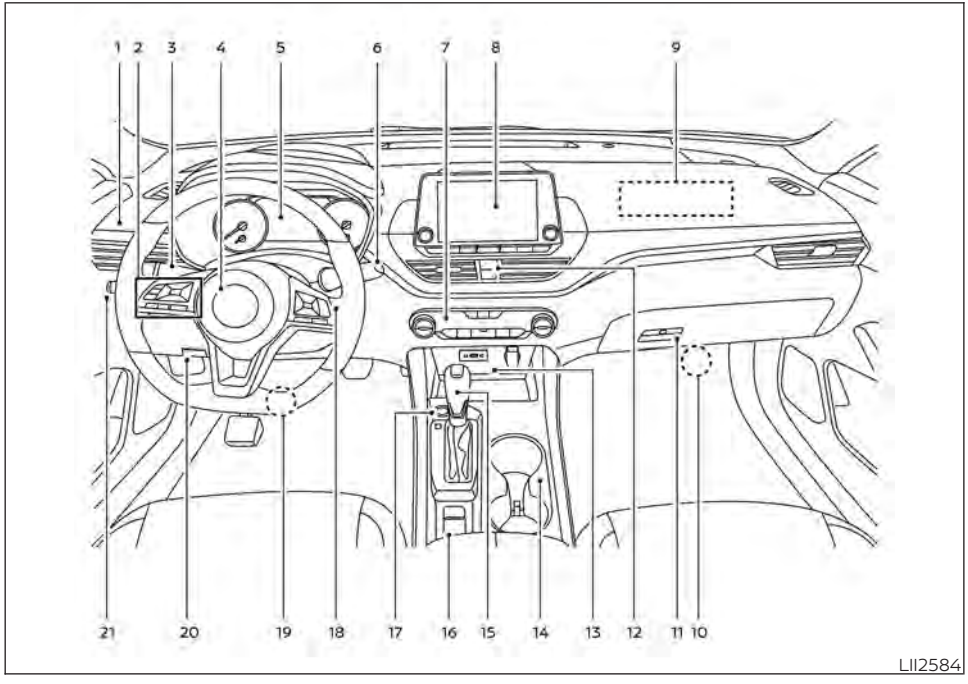

1. Vents (P. 4-31)
2. Steering wheel switches for audio control*
   Vehicle information display controls (P. 2-18, 2-34)
3. Headlight/fog light (if so equipped)/ turn signal switch (P. 2-57)
   Paddle shifters (if so equipped) (P. 5-18)
4. Driver supplemental air bag (P. 1-47)
   Horn (P. 2-64)
5. Meters and gauges (P. 2-4)
   Warning and indicator lights (P. 2-9)
   Vehicle information display (P. 2-18, 2-34)
6. Wiper and washer switch (P. 2-55)
7. Heater and air conditioner (P. 4-33, 4-40)
   Heated seat switches (if so equipped) (P. 2-64)
   Heated steering wheel switch (if so equipped) (P. 2-65)
8. Navigation system* (if so equipped)
   Audio system*
9. Front passenger supplemental air bag (P. 1-47)
10. Front passenger supplemental knee airbag (P. 1-47)
11.. Glove box (P. 2-71)
12. Front passenger air bag status light (P. 1-57)
    Hazard warning flasher switch (P. 6-2)
13. Power outlet (P. 2-69)
    USB connection port (if so equipped) (P. 2-70, 4-67)
    Aux jack*
14. Cup holders (P. 2-73)
15 Shift lever (P. 5-18)

16. Electronic parking brake switch (if so equipped) (P. 5-25)
    Automatic brake hold switch (if so equipped) (P. 5-27)
17. Push-button ignition switch (P. 5-13)
18. Cruise control switches (if so equipped) (P. 5-68)
    Intelligent Cruise Control (ICC) switches (if so equipped) (P. 5-71)
    Bluetooth® Hands-free Phone System*
    ProPILOT Assist Switch (if so equipped) (P. 5-94)
19. Driver supplemental knee airbag (P. 1-47)
20. Hood release (P. 3-22)
    Fuel-filler door release (P. 3-25)
    Tilt/telescopic steering wheel controls (P. 3-27)
21. Trip computer reset switch (P. 2-4)
    Instrument brightness control (P. 2-62)
    Steering assist switch (for vehicles with ProPILOT Assist) (if so equipped) (P. 2-66)
    Trunk opener (P. 3-22)

*: For additional information, refer to the separate NissanConnect® Owner's Manual.

Refer to the page number indicated in parentheses for operating details.

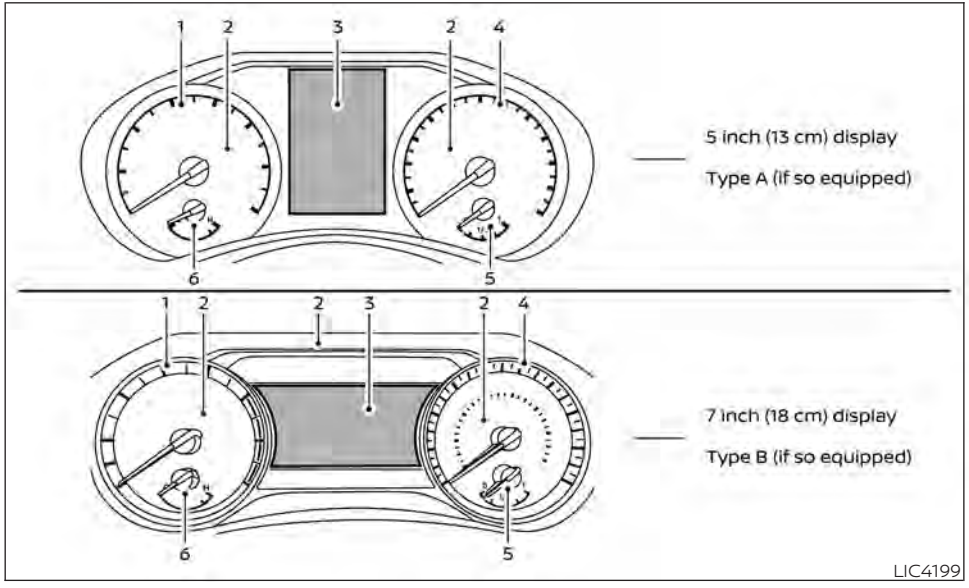

1. Tachometer
2. Warning and indicator lights
3. Vehicle information display
4. Speedometer
5. Fuel gauge
6. Engine coolant temperature gauge

SPEEDOMETER AND ODOMETER

This vehicle is equipped with a speedometer and odometer. The speedometer is located on the right side of the meter cluster. The odometer is located within the vehicle information display.

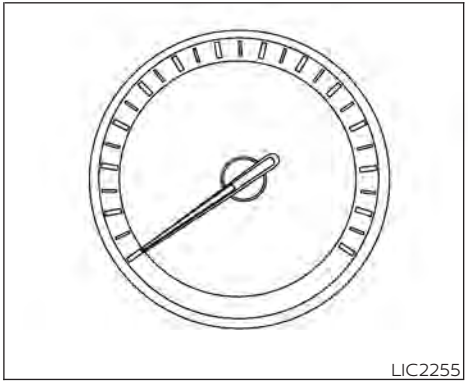

5 inch (13 cm) Type A (if so equipped)

Speedometer

The speedometer indicates vehicle speed.

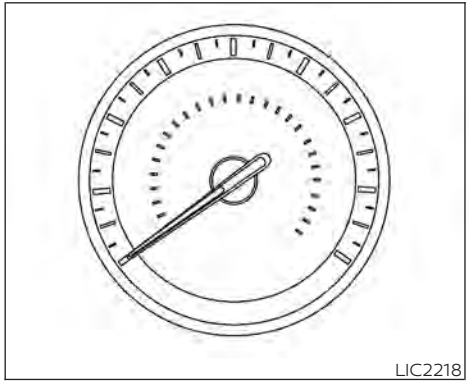

7 inch (18 cm) Type B (if so equipped)

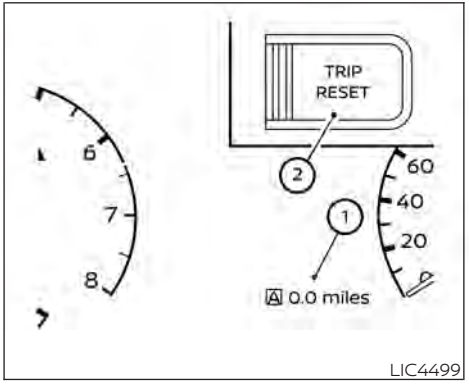

5 inch (13 cm) Type A (if so equipped)

Odometer/Twin trip odometer

The odometer and the twin trip odometer ① are displayed in the vehicle information display when the ignition switch is placed in the ON position.

The odometer records the total distance the vehicle has been driven.

The twin trip odometer records the distance of individual trips.

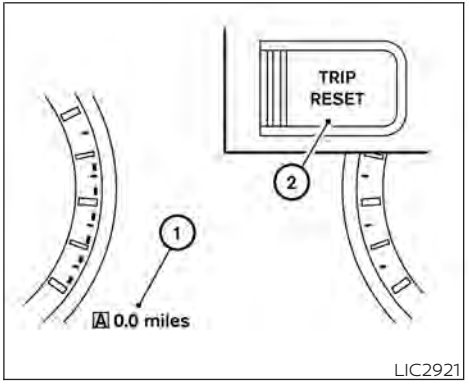

7 inch (18 cm) Type B (if so equipped)

Changing the display

Push the TRIP RESET switch ② on the left side of the instrument panel to change the display as follows:

Odometer Mileage → Trip **A** → Trip **B** → Odometer Mileage

Resetting the trip odometer

Push the TRIP RESET switch ② until the desired trip odometer (Trip **A** or Trip **B**) is displayed.

Pushing the TRIP RESET switch ② for more than 1 second resets the currently displayed trip odometer to zero.

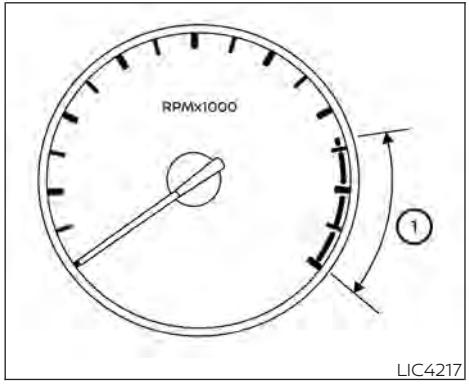

5 inch (13 cm) Type A (if so equipped)

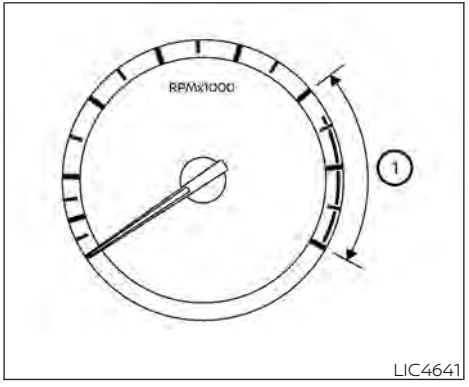

7 inch (18 cm) Type B (if so equipped)

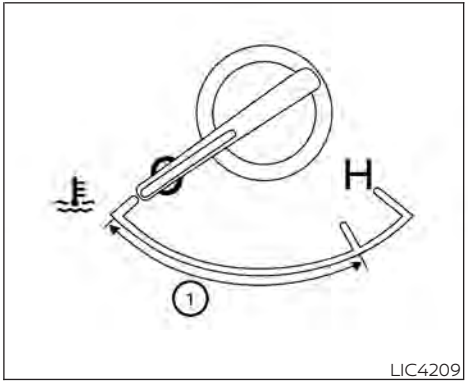

5 inch (13 cm) Type A (if so equipped)

TACHOMETER

The tachometer indicates engine speed in revolutions per minute (rpm).

Do not rev the engine into the red zone ①.

⚠ CAUTION

When engine speed approaches the red zone, shift to a higher gear or reduce engine speed. Operating the engine in the red zone may cause serious engine damage.

ENGINE COOLANT TEMPERATURE GAUGE

The gauge indicates the engine coolant temperature. The engine coolant temperature is within the normal range ① when the gauge needle points within the zone shown in the illustration.

The engine coolant temperature varies with the outside air temperature and driving conditions.

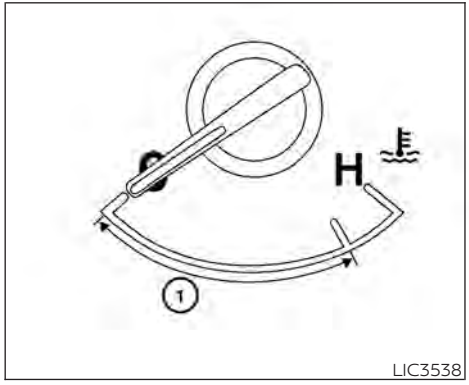

7 inch (18 cm) Type B (if so equipped)

⚠CAUTION

If the gauge indicates coolant temperature near the hot (H) end of the normal range, reduce vehicle speed to decrease temperature. If the gauge is over the normal range, stop the vehicle as soon as safely possible. If the engine is overheated, continued operation of the vehicle may seriously damage the engine. For additional information, see "If your vehicle overheats" (P. 6-19) for immediate action required.

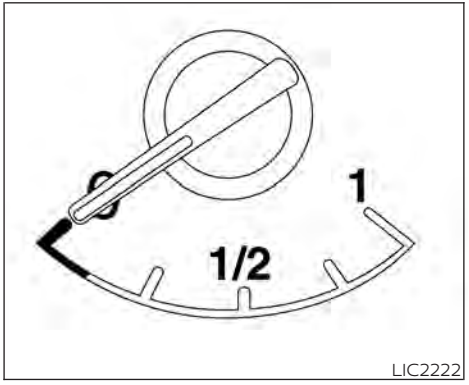

FUEL GAUGE

The gauge indicates the **approximate** fuel level in the tank.

The gauge may move slightly during braking, turning, acceleration, or going up or down hills.

The gauge needle returns to 0 (Empty) after the ignition switch is placed in the OFF position.

The low fuel warning message shows in the vehicle information display when the amount of fuel in the tank is getting low.

Refill the fuel tank before the gauge registers 0 (Empty).

The ⛽ indicates that the fuel-filler door is located on the driver's side of the vehicle.

⚠CAUTION

- **If the vehicle runs out of fuel, the Malfunction Indicator Light (MIL) may come on. Refuel as soon as possible. After a few driving trips, the light should turn off. If the light remains on after a few driving trips, have the vehicle inspected. It is recommended that you visit a NISSAN dealer for this service.**
- **For additional information, see "Malfunction Indicator Light (MIL)" (P. 2-15) .**

DISTANCE TO EMPTY (DTE)

Displays the estimated distance the vehicle can be driven before refueling. The value is calculated based on recent fuel economy, the amount of fuel remaining in the fuel tank, and the actual fuel consumption.

Changes in driving patterns or conditions can cause the DTE value to vary. As a result, the value displayed may differ from the actual distance that can be driven.

DTE display will change to "---" when the fuel level in the tank is getting low, prior to the fuel gauge reaching 0 (Empty).

NOTE:

- **The DTE value after refill is estimated based on recent fuel economy and amount of fuel added.**
- **If a small amount of fuel is added, or the ignition is on during refueling, the display may not be updated.**
- **Conditions that affect the fuel economy will also affect the estimated DTE value (city/highway driving, idle time, remote start time, terrain, seasonal weather, added vehicle weight, added deflectors, roof racks, etc.).**

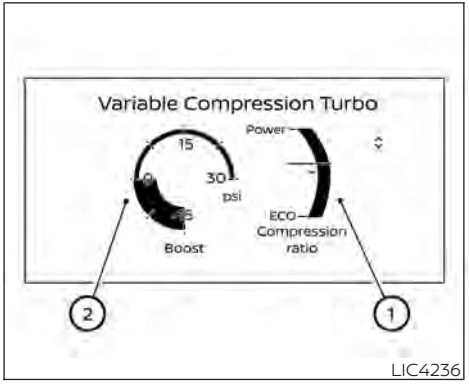

VARIABLE COMPRESSION TURBO (if so equipped)

Your engine is equipped with a variable compression ratio system called "Variable Compression Turbo". This system can vary the engine compression ratio continuously.

According to driving conditions, the system applies optimum compression ratio automatically to achieve both high output and high fuel economy efficiency.

This is not a physical gauge. It is a display option in the vehicle information display that can be selected. For additional information, see "Vehicle information display" (P. 2-34).

① Compression ratio status display
Displays the status of compression ratio controlled by Variable Compression Turbo. The lowest compression ratio (8:1) and the highest (14:1) are displayed as "Power" and "ECO" respectively.

② Turbo charger boost pressure gauge
Displays the turbo charger boost pressure.

NOTE:

Under some conditions, the compression ratio may not change. This is not a malfunction of the system.

⚠ CAUTION

If the Variable Compression Turbo becomes faulty, the Malfunction Indicator Light (MIL) may come on. For additional information, see "Malfunction Indicator Light (MIL)" (P. 2-15).

WARNING LIGHTS, INDICATOR LIGHTS AND AUDIBLE REMINDERS

Warning/Indicator light (red)	Warning/Indicator light (yellow)	Warning/Indicator light (other)
BRAKE or Brake warning light	ABS or Anti-lock Braking System (ABS) warning light	Automatic brake hold indicator light (white/green) (if so equipped)
Charge warning light	Automatic Emergency Braking (AEB) with Pedestrian Detection system warning light	Front fog light indicator light (green) (if so equipped)
PARK or Electronic parking brake indicator light (if so equipped)	or Electronic parking brake warning light (if so equipped)	High Beam Assist indicator light (green)
Engine oil pressure warning light	Front passenger air bag status light	High beam indicator light (blue)
Master warning light	Low tire pressure warning light	Side light and headlight indicator light (green)
Seat belt warning light and chime	Malfunction Indicator Light (MIL)	Turn signal/hazard indicator lights (green)
Security indicator light	Master warning light	
Supplemental air bag warning light	Power steering warning light	
	Rear Automatic Braking (RAB) warning light (if so equipped)	
	Slip indicator light	
	Vehicle Dynamic Control (VDC) OFF indicator light	

CHECKING LIGHTS

With all doors closed, apply the parking brake, fasten the seat belts and place the ignition switch in the ON position without starting the engine. The following lights (if so equipped) will come on:

, , , , , PARK or

The following lights (if so equipped) come on briefly and then go off:

ABS or , , , , , BRAKE or , ,

If any light fails to come on or operate in a way other than described, it may indicate a burned-out bulb and/or a system malfunction. Have the system checked. It is recommended that you visit a NISSAN dealer for this service.

Some indicators and warnings are also displayed in the vehicle information display between the speedometer and tachometer. For additional information, see "Vehicle information display-5 inch (13 cm) Type A" (P. 2-18) or "Vehicle information display-7 inch (18 cm) Type B" (P. 2-34).

WARNING/INDICATOR LIGHTS (red)

For additional information on warnings and indicators, see "Vehicle information display–5 inch (13 cm) Type A" (P. 2-18) or "Vehicle information display—7 inch (18cm) Type B" (P. 2-34).

BRAKE or Brake warning light

This light functions for both the parking brake and the foot brake systems.

Parking brake indicator (if so equipped)

When the ignition switch is placed in the ON position, the light comes on when the parking brake is applied.

Low brake fluid warning light

When the ignition switch is placed in the ON position, the light warns of a low brake fluid level. If the light comes on while the engine is running with the parking brake not applied, stop the vehicle and perform the following:

1. Check the brake fluid level. Add brake fluid as necessary. For additional information, see "Brake fluid" (P. 8-12).
2. If the brake fluid level is correct, have the warning system checked. It is recommended that you visit a NISSAN dealer for this service.

WARNING

- **Your brake system may not be working properly if the warning light is on. Driving could be dangerous. If you judge it to be safe, drive carefully to the nearest service station for repairs. Otherwise, have your vehicle towed because driving it could be dangerous.**
- **Pressing the brake pedal with the engine stopped and/or a low brake fluid level may increase your stopping distance and braking will require greater pedal effort as well as pedal travel.**
- **If the brake fluid level is below the MINIMUM or MIN mark on the brake fluid reservoir, do not drive until the brake system has been checked. It is recommended that you visit a NISSAN dealer for this service.**

Charge warning light

If this light comes on while the engine is running, it may indicate the charging system is not functioning properly. Turn the engine off and check the generator belt. If the belt is loose, broken, or missing, or if the light remains on, have the system checked. It is recommended that you visit a NISSAN dealer for this service.

CAUTION

- **Do not ground electrical accessories directly to the battery terminal. Doing so will bypass the variable voltage control system and the vehicle battery may not charge completely. For additional information, see "Variable voltage control system" (P. 8-16).**
- **Do not continue driving if the generator belt is loose, broken or missing.**

PARK or (P) Electronic parking brake indicator light (if so equipped)

This light illuminates when the electronic parking brake system is operating.

When the ignition switch is placed in the ON position, the electronic parking brake warning light illuminates. When the engine is started and the parking brake is released, the warning light turns off.

If the parking brake is not released, the electronic parking brake warning light remains illuminated. Ensure the electronic parking brake warning light has turned off before driving.

If the electronic parking brake warning light illuminates or flashes while the electronic parking brake system warning light (!) (yellow) illuminates, it may indicate that the electronic parking brake system is not functioning properly. Have the system checked. It is recommended that you visit a NISSAN dealer for this service.

For additional information, see "Parking brake" (P. 5-25).

Engine oil pressure warning light

This light warns of low engine oil pressure. If the light flickers or comes on during normal driving, pull off the road in a safe area, stop the engine **immediately** and call a NISSAN dealer or other authorized repair shop.

The engine oil pressure warning light is not designed to indicate a low oil level. Use the dipstick to check the oil level. For additional information, see "Engine oil" (P. 8-7).

CAUTION

Running the engine with the engine oil pressure warning light on could cause serious damage to the engine almost immediately. Such damage is not covered by the NISSAN New Vehicle Limited Warranty. Turn off the engine as soon as it is safe to do so.

Master warning light

When the ignition is in the ON position, the master warning light illuminates if any of the following are displayed on the vehicle information display.

- Parking brake release warning
- Door open warning (while moving)
- Steering Alert hands on detection warning

The warning(s) remain on the vehicle information display until action is taken, or the ignition is placed in the OFF position.

Seat belt warning light and chime

The light and chime remind you to fasten the driver and front passenger seat belts.

For additional information, see "Seat belts" (P. 1-12).

Security indicator light

This light blinks when the ignition switch is placed in the OFF, LOCK or AUTO ACC position.

The blinking security indicator light indicates that the security systems equipped on the vehicle are operational.

For additional information, see "Security systems" (P. 2-52).

Supplemental air bag warning light

When the ignition switch is placed in the ON or START position, the supplemental air bag warning light illuminates for about 7 seconds and then turns off. This means the system is operational.

If any of the following conditions occur, the front air bag, side air bag, curtain air bag, and pretensioner systems need servicing and your vehicle must be taken to a NISSAN dealer:

- The supplemental air bag warning light remains on after approximately 7 seconds.
- The supplemental air bag warning light flashes intermittently.
- The supplemental air bag warning light does not come on at all.

Unless checked and repaired, the supplemental restraint system (air bag system) and/or the pretensioners may not function properly. For additional details, see "Supplemental Restraint System (SRS)" (P. 1-47).

WARNING

If the supplemental air bag warning light is on, it could mean that the front air bag, side air bag, curtain air bag systems and/or pretensioner systems will not operate in an accident. To help avoid injury to yourself or others, have your vehicle checked as soon as possible. It is recommended that you visit a NISSAN dealer for this service.

WARNING/INDICATOR LIGHTS (yellow)

For additional information on warnings and indicators, see "Vehicle information display-5 inch (13 cm) Type A" (P. 2-18) or "Vehicle information display-7 inch (18 cm) Type B" (P. 2-34).

ABS or Anti-lock Braking System (ABS) warning light

When the ignition switch is placed in the ON position, the ABS warning light illuminates and then turns off. This indicates the ABS is operational.

If the ABS warning light illuminates while the engine is running or while driving, it may indicate the ABS is not functioning properly. Have the system checked. It is recommended that you visit a NISSAN dealer for this service.

If an ABS malfunction occurs, the anti-lock function is turned off. The brake system then operates normally but without anti-lock assistance. For additional information, see "Brake system" (P. 5-173).

Automatic Emergency Braking (AEB) with Pedestrian Detection system warning light

This light comes on when the ignition switch is placed in the ON position. It turns off after the engine is started.

This light illuminates when the AEB with Pedestrian Detection system is set to OFF in the vehicle information display.

If the light illuminates when the AEB with Pedestrian Detection system is on, it may indicate that the system is unavailable. For additional information, see "Automatic Emergency Braking (AEB) with Pedestrian Detection" (P. 5-135) and "Intelligent Forward Collision Warning (I-FCW)" (P. 5-147).

or Electronic parking brake warning light (if so equipped)

The electronic parking brake system warning light functions for the electronic parking brake system. If the warning light illuminates, it may indicate the electronic parking brake system is not functioning properly. Have the system checked. It is recommended that you visit a NISSAN dealer for this service.

For additional information, see "Parking brake" (P. 5-25).

Front passenger air bag status light

The front passenger air bag status light will be lit and the passenger front air bag will be off depending on how the front passenger seat is being used.

For additional information, see "Front passenger air bag and status light" (P. 1-57).

Low tire pressure warning light

Your vehicle is equipped with a Tire Pressure Monitoring System (TPMS) that monitors the tire pressure of all tires except the spare.

The low tire pressure warning light warns of low tire pressure or indicates that the TPMS is not functioning properly.

After the ignition switch is placed in the ON position, this light illuminates for about 1 second and turns off.

Low tire pressure warning

If the vehicle is being driven with low tire pressure, the warning light will illuminate. A "Tire Pressure Low - Add Air" warning also appears in the vehicle information display.

When the low tire pressure warning light illuminates, you should stop and adjust the tire pressure of all four tires to the recommended COLD tire pressure shown on the Tire and Loading Information label located in the driver's door opening. The low tire pressure warning light does not automatically turn off when the tire pressure is adjusted. After the tire is inflated to the recommended pressure,

the vehicle must be driven at speeds above 16 mph (25 km/h) to activate the TPMS and turn off the low tire pressure warning light. Use a tire pressure gauge to check the tire pressure.

The "Tire Pressure Low - Add Air" warning appears each time the ignition switch is placed in the ON position as long as the low tire pressure warning light remains illuminated.

For additional information, see "Vehicle information display — 7 inch (18 cm) Type B" (P. 2-34), and "Tire Pressure Monitoring System (TPMS)" (P. 5-5) and (P. 6-3).

TPMS malfunction

If the TPMS is not functioning properly, the low tire pressure warning light will flash for approximately 1 minute when the ignition switch is placed in the ON position. The light will remain on after 1 minute. Have the system checked. It is recommended that you visit a NISSAN dealer for this service. The "Tire Pressure Low — Add Air" warning does not appear if the low tire pressure warning light illuminates to indicate a TPMS malfunction.

For additional information, see "Tire Pressure Monitoring System (TPMS)" (P. 5-5) and (P. 6-3).

⚠ WARNING

- **Radio waves could adversely affect electric medical equipment. Those who use a pacemaker should contact the electric medical equipment manufacturer for the possible influences before use.**
- **If the light does not illuminate with the ignition switch placed in the ON position, have the vehicle checked as soon as possible. It is recommended that you visit a NISSAN dealer for this service.**
- **If the light illuminates while driving, avoid sudden steering maneuvers or abrupt braking, reduce vehicle speed, pull off the road to a safe location and stop the vehicle as soon as possible. Driving with under-inflated tires may permanently damage the tires and increase the likelihood of tire failure. Serious vehicle damage could occur and may lead to an accident and could result in serious personal injury or death. Check the tire pressure for all four tires. Adjust the tire pressure to the recommended COLD tire pressure show on the Tire and Loading Information label located in the driver's door opening to turn the low tire pressure warning light off. If the light still illuminates while driving after adjusting the tire pressure, a tire may be flat or the TPMS may be malfunctioning. If you have a flat tire, replace it with a spare tire as soon as possible. If no tire is flat and all tires are properly inflated, have the vehicle checked. It is recommended that you visit a NISSAN dealer for this service.**
- **When using a wheel without the TPMS such as the spare tire, the TPMS will not function and the low tire pressure warning light will flash for approximately 1 minute. The light will remain on after 1 minute. Have your tires replaced and/or TPMS system reset as soon as possible. It is recommended that you visit a NISSAN dealer for these services.**
- **Replacing tires with those not originally specified by NISSAN could affect the proper operation of the TPMS.**

⚠ CAUTION

- **The TPMS is not a substitute for the regular tire pressure check. Be sure to check the tire pressure regularly.**
- **If the vehicle is being driven at speeds of less than 16 mph (25 km/h), the TPMS may not operate correctly.**
- **Be sure to install the specified size of tires to the four wheels correctly.**

Malfunction Indicator Light (MIL)

If this indicator light comes on steady or blinks while the engine is running, it may indicate a potential emission control malfunction.

The MIL may also come on steady if the fuel-filler cap is loose or missing, or if the vehicle runs out of fuel. Check to make sure the fuel-filler cap is installed and closed tightly, and that the vehicle has at least 3 gallons (11.4 liters) of fuel in the fuel tank.

After a few driving trips, the light should turn off if no other potential emission control system malfunction exists.

If this indicator light comes on steady for 20 seconds and then blinks for 10 seconds when the engine is not running, it indicates that the vehicle is not ready for an emission control system inspection/maintenance test. For additional information, see "Readiness for Inspection/Maintenance (I/M) test" (P. 10-24).

Operation

The MIL will come on in one of two ways:

- MIL on steady — An emission control system malfunction has been detected. Check the fuel-filler cap if the Loose Fuel Cap warning appears in the vehicle information display. If the fuel-filler cap is loose or missing, tighten or install the cap and continue to drive the vehicle. The light should turn off after a few driving trips. If the light does not turn off after a few driving trips, have the vehicle inspected. It is recommended that you visit a NISSAN dealer for this service. You do not need to have your vehicle towed to the dealer.
- MIL blinking — An engine misfire has been detected which may damage the emission control system. To reduce or avoid emission control system damage:
  - do not drive at speeds above 45 mph (72 km/h).
  - avoid hard acceleration or deceleration.
  - avoid steep uphill grades.
  - if possible, reduce the amount of cargo being hauled or towed.

The MIL may stop blinking and come on steady. Have the vehicle inspected. It is recommended that you visit a NISSAN dealer for this service. You do not need to have your vehicle towed to the dealer.

⚠ CAUTION

Continued vehicle operation without having the emission control system checked and repaired as necessary could lead to poor driveability, reduced fuel economy, and possible damage to the emission control system.

Master warning light

When the ignition is in the ON position, the master warning light illuminates if any of the following are displayed on the vehicle information display.

- No key warning
- Low windshield-washer fluid warning
- Door open warning (when stopped)
- Trunk open warning

- Loose fuel cap
- Low tire pressure warning
- AWD warning

If the master warning light illuminates and the message(s) are not visible on the vehicle information display, use the buttons located on the steering wheel to navigate the vehicle information display until the "Warnings" screen is displayed.

Power steering warning light

WARNING

- **If the engine is not running or is turned off while driving, the power assist for the steering will not work. Steering will be harder to operate.**
- **When the power steering warning light illuminates with the engine running, there will be no power assist for the steering. You will still have control of the vehicle, but the steering will be harder to operate. Have the power steering system checked. It is recommended that you visit a NISSAN dealer for this service.**

When the ignition switch is placed in the ON position, the power steering warning light illuminates. After starting the engine, the power steering warning light turns off. This indicates the power steering is operational.

If the power steering warning light illuminates while the engine is running, it may indicate the power steering is not functioning properly and may need servicing. Have the power steering checked. It is recommended that you visit a NISSAN dealer for this service.

When the power steering warning light illuminates with the engine running, there will be no power assist for the steering, but you will still have control of the vehicle. At this time, greater steering effort is required to operate the steering wheel, especially in sharp turns and at low speeds.

For additional information, see "Power steering" (P. 5-172).

Rear Automatic Braking (RAB) warning light (if so equipped)

This light comes on when the ignition switch is placed in the ON position. It turns off after the engine is started.

This light illuminates when the RAB system is turned off in the vehicle information display.

If the light illuminates when the RAB system is on, it may indicate that the system is unavailable. For additional information, see "Rear Automatic Braking (RAB)" (P. 5-127).

Slip indicator light

This indicator light will blink when the Vehicle Dynamic Control (VDC) system is operating, thus alerting the driver to the fact that the road surface is slippery and the vehicle is nearing its traction limits.

You may feel or hear the system working; this is normal.

The light will blink for a few seconds after the VDC system stops limiting wheel spin.

The indicator light also comes on when you place the ignition switch in the ON position. The light will turn off after approximately 2 seconds if the system is operational. If the light does not come on have the system checked. It is recommended that you visit a NISSAN dealer for this service.

Vehicle Dynamic Control (VDC) OFF indicator light

This indicator light comes on when the VDC is turned off in the vehicle information display. This indicates the VDC has been turned off.

Turn the VDC on using the vehicle information display, or by restarting the engine. For additional information, see "Vehicle Dynamic Control (VDC) system" (P. 5-175).

The VDC light also comes on when the ignition switch is placed in the ON position. The light will turn off after a period of time if the system is operational. If the light stays on or comes on along with the indicator light while you are driving, have the VDC system checked. It is recommended that you visit a NISSAN dealer for this service.

WARNING

VDC should remain on unless freeing a vehicle from mud or snow.

While the VDC system is operating, you might feel a slight vibration or hear the system working when starting the vehicle or accelerating, but this is normal.

WARNING/INDICATOR LIGHTS (other)

For additional information on warnings and indicators, see "Vehicle information display-5 inch (13 cm) Type A" (P. 2-18) or "Vehicle information display 7 inch (18 cm) Type B" (P. 2-34).

Automatic brake hold indicator light (white/green) (if so equipped)

The automatic brake hold indicator light (white) illuminates when the automatic brake hold system is on standby.

The automatic brake hold indicator light (green) illuminates when the automatic brake hold system is operating.

For additional information, see "Automatic brake hold" (P. 5-27).

Front fog light indicator light (green) (if so equipped)

The front fog light indicator light illuminates when the front fog lights are on. For additional information, see "Fog light switch" (P. 2-63).

High Beam Assist indicator light (green)

This indicator light illuminates when the headlights come on while the headlight switch is in the AUTO position with the high beams selected. This indicates that the high beam assist is operational.

For additional information, see "Headlight and turn signal switch" (P. 2-57).

High beam indicator light (blue)

This blue light comes on when the headlight high beams are on and goes out when the low beams are selected.

The high beam indicator light also comes on when the passing signal is activated.

Side light and headlight indicator light (green)

The side light and headlight indicator light illuminates when the side light or headlight position is selected. For additional information, see "Headlight and turn signal switch" (P. 2-57).

Turn signal/hazard indicator lights (green)

The appropriate light flashes when the turn signal switch is activated.

Both lights flash when the hazard switch is turned on.

AUDIBLE REMINDERS

Brake pad wear warning

The disc brake pads have audible wear warnings. When a disc brake pad requires replacement, it makes a high pitched scraping sound when the vehicle is in motion, whether or not the brake pedal is depressed. Have the brakes checked as soon as possible if the warning sound is heard.

Light reminder chime

With the ignition switch placed in the OFF position, a chime sounds when the driver's door is opened if the headlights or parking lights are on.

Turn the headlight control switch off before leaving the vehicle.

NISSAN Intelligent Key® door buzzer

The Intelligent Key door buzzer sounds if the Intelligent Key is left inside the vehicle when locking the doors. When the buzzer sounds, be sure to check both the vehicle and the Intelligent Key. For additional information, see "NISSAN Intelligent Key®" (P. 3-2).

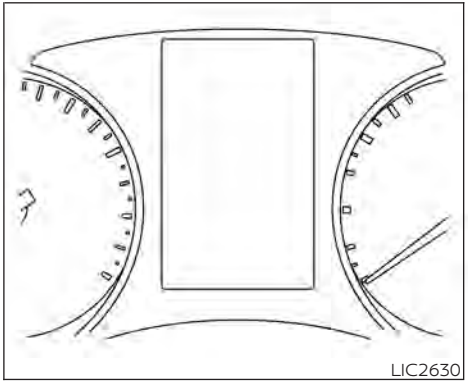

The vehicle information display is located to the left of the speedometer. It displays such items as:

- Vehicle settings
- Indicators and warnings
- Information/warning messages
- Tire pressure information
- Drive computer information
- Cruise control system information
- Driving Aids (if so equipped)
- NISSAN Intelligent Key® operation information
- Audio information

- Shift position
- Distance to empty
- Odometer/twin trip odometer
- Clock and outside temperature

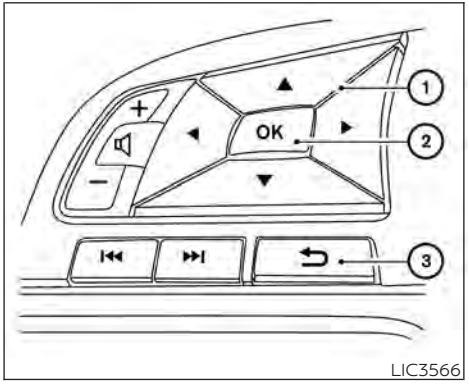

HOW TO USE THE VEHICLE INFORMATION DISPLAY

The vehicle information display can be changed using the ◀ ▶ ▼ ▲, ⮌, and OK buttons located on the steering wheel.

① ◀ ▶ ▼ ▲ - Use these buttons to navigate the vehicle information display.

② OK - Change or select an item in the vehicle information display.

③ ⮌ — Returns to the previous menu.

The OK, ◀ ▶ and ⮌ buttons also control audio and control panel functions in some conditions. Most screens and menus offer instruction prompts of the steering switch buttons to indicate how to control the vehicle information display. The OK button changes the audio source and the ▼ ▲ buttons also control voice recognition manual mode. The OK button can be used to change the audio source when the audio screen is displayed. The ▼ ▲ buttons can be used when controlling voice recognition prompts manually. For additional information, refer to the separate NissanConnect® Owner's Manual.

STARTUP DISPLAY

When the vehicle in placed in the ON position the vehicle information display may display the following screens (if so equipped):

- Drive Computer — Speed, Trip Distance & Time, Fuel Economy
- Audio
- Driving Aids
- Tire Pressure
- Settings
- Warnings*

*Warnings will only display if there are any present. For additional information, see "Vehicle information display warnings and indicators" (P. 2-28).

To control what items display in the vehicle information display, see "How to use the vehicle information display" (P. 2-19).

RESETTING THE DRIVE COMPUTER

The drive computer is divided across three screens:

- Speed
- Trip Distance & Time
- Fuel Economy

1. Press the ◄ or ► buttons until the desired drive computer screen is displayed.
2. Press the OK button to bring up the drive computer Reset menu.
3. Use the ▲ or ▼ to select the desired option. Then press the OK button:

- "Cancel" — returns to the previous screen without resetting the trip computer.
- Drive computer value — resets only the displayed drive computer value.
  - "Average Speed" - resets the average speed of the selected drive computer screen.
  - "Distance & Time" - resets the distance and time of the selected drive computer screen.
  - "Fuel Economy" - resets the fuel economy of the selected drive computer screen.
- "All" — resets all linked drive computer values. This includes distance & time, average fuel economy and average speed information.

OIL CONTROL SYSTEM (if so equipped)

The oil control system can be accessed in the Maintenance portion of the vehicle information display settings.

Engine oil information informs the distance to oil change. Never exceed one year or 7,500 miles (12,000 km) between oil change intervals for the 2.0L 4 cylinder (KR20DDET engine model) or 10,000 miles (16,000 km) between oil change intervals for the 2.5L 4 cylinder (PR25DD engine model).

Display when ignition is ON	Display timing	Action Required
Engine Oil Service due in xxx kilometers	Remaining oil life is less than 940 miles (1500 km).	Plan to have your vehicle serviced.
Service due now	Remaining oil life is 0 miles (0 km).	Have your vehicle serviced within two weeks or less than 500 miles (800 km).

The oil change interval cannot be adjusted manually.

The distance to oil change interval is calculated depending on the driving conditions and set automatically by the oil control system. A reminder will be displayed when approaching the end of the service interval.

When the Factory Reset option is selected in the vehicle information display, the oil control system will also be reset to initial value. Please change the engine oil when Factory Reset is selected.

⚠ CAUTION

If the oil replacement indicator is displayed, change the engine oil within two weeks or less than 500 miles (800 km).

Operating the vehicle with deteriorated oil can damage the engine.

To reset oil control system:

1. Place the ignition switch in the ON position.
2. Press the ◄ and ► buttons located on the steering wheel until "Settings" displays in the vehicle information display. Use ▼ ▲ to select "Maintenance". Then, press the OK button.
3. Select "Oil Control System" and press the OK button.
4. Press the OK button according to the reset instructions displayed at the bottom of the "Oil Control System" maintenance screen.
5. For additional information, refer to the separate maintenance booklet.

SETTINGS

The setting mode allows you to change the information displayed in the vehicle information display. It also allows you to change vehicle functions:

- VDC
- Driver Assistance
- Clock
- Meter Settings
- Vehicle Settings
- Maintenance
- Alarm
- Tire Pressures
- Unit
- Language
- Factory Reset

VDC

The VDC Setting menu allows the user to enable or disable the Vehicle Dynamic Control (VDC) system.

Menu item	Explanation
VDC	Allows the user turn the VDC system on or off. For additional information, see "Vehicle Dynamic Control (VDC) system" (P. 5-175).

Driver Assistance

The driver assistance menu allows the user to change the settings for driving, parking, and braking aids.

Some menu items shown below may not be equipped on your vehicle.

Menu item			Explanation
Driving Aids			Displays available driving aids.
	Emergency Brake		Displays available emergency brake options.
		Front	Allows the user to turn the emergency braking system on or off. For additional information, see "Automatic Emergency Braking (AEB) with Pedestrian Detection " (P. 5-135) and "Intelligent Forward Collision Warning (I-FCW)" (P. 5-147).
		Rear	Allows the user to turn the rear emergency braking system on or off. For additional information, see "Rear Automatic Braking (RAB)" (P. 5-127).
	Lane		Displays available lane options.
		Lane (LDW)	Allows the user to turn the Lane Departure Warning (LDW) system on or off. For additional information, see "Lane Departure Warning (LDW)" (P. 5-33).
	Blind Spot		Displays available emergency brake options.
		Blind Spot (BSW)	Allows the user to turn the Blind Spot Warning (BSW) system on or off. For additional information, see "Blind Spot Warning (BSW) " (P. 5-46).
		Indicator Brightness	Allows user to change the brightness of the side indicator.
Driver Attention			Allows user to turn the Intelligent Driver Alertness on or off. For additional information, see "Intelligent Driver Alertness" (P. 5-162).
Parking Aids			Displays available parking aids.
	Cross Traffic		Allows user to turn the Rear Cross Traffic Alert (RCTA) system on or off. For additional information, see " Rear Cross Traffic Alert (RCTA)" (P. 5-58).
	Rear Sensor		Allows user to turn the rear sonar on or off.
	Display		Allows user to turn the display on or off.
	Volume		Allows the user to set the parking sensor volume to High/Med./Low.
	Range		Allows user to set the distance sensor range to Far/Mid./Near.
Chassis Control			Displays available chassis control options.
	Trace Control		Allows user to turn the Intelligent Trace Control system on or off. For additional information, see " Intelligent Trace Control (I-TC)" (P. 5-178).

Clock

Menu item	Explanation
Clock	Allows user to adjust the clock settings and time within the vehicle information display. Adjustments that can be made include manually setting the time, 12H/24H format, Daylight Saving Time, and time zone. The clock can also be set within the center display. For additional information, refer to the separate NissanConnect® Owner's Manual.

Meter Settings

The meter settings menu allows the user to customize the information that appears in the vehicle information display.

Some menu items shown below may not be equipped on your vehicle.

Menu item		Explanation
Main Menu Selection		Displays available screens that can be shown in the vehicle information display.
	Speed	Allows user to turn the speedometer screen on or off in the vehicle information display.
	Trip	Allows user to turn the trip computer on or off in the vehicle information display.
	Fuel Economy	Allows user to turn the fuel economy screen on or off in the vehicle information display.
	Audio	Allows user to turn the audio controls screen on or off in the vehicle information display.
	Driving Aids	Allows user to turn the driving aids screen on or off in the vehicle information display.
	Tire pressures	Allows user to turn the tire pressure screen on or off in the vehicle information display.
Welcome Effect		Displays the available welcome effect settings.
	Dial Effect	Allows user to turn the dial effect on or off.
	Display Effect	Allows user to turn the display effect on or off.
Light/Wiper		Displays the available light and wiper guidance settings.
	Light Guidance	Allows user to turn the light mode guidance on or off.
	Wiper Guidance	Allows user to turn the wiper mode guidance on or off.

Vehicle Settings

The vehicle settings allow the user to change the settings for lights, wipers, locking, keys, and other vehicle settings.

Some menu items shown below may not be equipped on your vehicle.

Menu item			Explanation
Lighting			Displays the available lighting options.
	Welcome Light		Allows user to turn the welcome light on or off.
	Auto Room Lamp		Allows user to turn the interior light timer on or off.
	Light Sensitivity		Allows user to change when the auto lights activate based on exterior brightness.
	Light Off Delay		Allows user to change the length of time the exterior lights remain on.
Turn indicator			Displays the available turn indicator options.
	3 Flash Pass		Allows user to turn the 3 flash pass on or off.
Locking			Displays the available locking options.
	I-Key Door Lock		Allows the user to turn the I-Key door lock on or off. When on, the request switch on the door is activated.
	Selective Unlock		Allows user to turn selective unlock on or off. When turned on, only the driver's door is unlocked after the door unlock operation. When the door handle request switch on the driver's or front passenger's side door is pushed to be unlocked, only the corresponding door is unlocked first. All the doors can be unlocked if the door unlock operation is performed again within 60 seconds. When this item is turned off, all the doors will be unlocked after the door unlock operation is performed once.
	Auto Door Unlock		Displays the auto door unlock options.
		Off	Doors will have to be manually unlocked.
		Ignition OFF	Doors will unlock when the ignition is turned off.
		Shift to Park	Doors will unlock when the vehicle is shifted into Park.
	Answer Back Horn		Allows user to turn answer back horn on or off. When turned on, the horn will chirp and the hazard indicators will flash twice when locking the vehicle with the Intelligent Key.

Menu item		Explanation
Wipers		Displays the available wiper options.
	Speed Dependent	Allows user to turn wiper with speed on or off.
Rear Door Alert		Displays the available Rear Door Alert options. For additional information, see “Rear Door Alert” (P. 2-67).
	Horn & Alert	When selected, the alert is displayed and the horn sounds.
	Alert Only	When selected, only the alert is displayed.
	OFF	When selected, no alert or horn will be active.
Remote Start		Allows user to turn the Remote Engine Start on or off. When turned on, the engine can be started remotely. For additional information, see “Remote Engine Start” (P. 3-19).

Maintenance

The maintenance menu allows the user to set reminders for various vehicle maintenance items.

⚠WARNING

The tire replacement indicator is not a substitute for regular tire checks, including tire pressure checks. For additional information, see "Changing wheels and tires" (P. 8-39). Many factors including tire inflation, alignment, driving habits and road conditions affect tire wear and when tires should be replaced. Setting the tire replacement indicator for a certain driving distance does not mean your tires will last that long. Use the tire replacement indicator as a guide only and always perform regular tire checks. Failure to perform regular tire checks, including tire pressure checks could result in tire failure. Serious vehicle damage could occur and may lead to a collision, which could result in serious personal injury or death.

Menu item		Explanation
Maintenance		Displays various maintenance reminder options.
	Oil Control System	Allows user to reset the current interval. This should only be done after completing oil change maintenance.
	Oil Filter	Allows user to set a reminder at a specific interval or reset the current one.
	Tire	Allows user to set a reminder at a specific interval or reset the current one.
	Other	Allows user to set a reminder at a specific interval or reset the current one.

Alarm

The alarms menu allows the user to set various alerts.

Menu item	Explanation
Timer Alert	Allows user to set the timer alert for a specific interval.
Phone	Allows user to turn the phone alert on or off.
Mail	Allows user to turn the mail alert on or off.

Tire Pressures

The TPMS settings menu allows the user to change the tire pressure units displayed in the vehicle information display.

Menu item		Explanation
Tire Pressures		Displays available tire pressure settings.
	Tire Pressure Unit	Allows user to select the tire pressure units that will display in the vehicle information display.

Unit

The units menu allows the user to change the units shown in the vehicle information display.

Some menu items shown below may not be equipped on your vehicle.

Menu item	Explanation
Mileage	Allows user to select different mileage display units.
Tire Pressures	Allows user to select different pressure display units.
Temperature	Allows user to select different temperature display units.

Language

The language menu allows the user to change the languages displayed in the vehicle information display.

Menu item	Explanation
Language	Displays available language options for the vehicle information display.

Factory Reset

The factory reset menu allows the user to restore the vehicle information display settings to factory status.

Menu item	Explanation
Factory Reset	Allows user to reset the vehicle information display settings to the original factory settings. Once selected, the user can confirm or cancel the reset.

VEHICLE INFORMATION DISPLAY WARNINGS AND INDICATORS

The following messages may appear in your vehicle information display.

Engine start operation for Intelligent Key system (if I-Key battery level is low)

This indicator appears when the battery of the Intelligent Key is low and when the Intelligent Key system and the vehicle are not communicating normally.

If this appears, touch the ignition switch with the Intelligent Key while depressing the brake pedal. For additional information, see "Battery replacement" (P. 5-15).

Key Battery Low

This indicator appears when the Intelligent Key battery is running out of power.

If this indicator appears, replace the battery with a new one. For additional information, see "Battery replacement" (P. 8-23).

Key ID Incorrect

This warning appears when the ignition switch is placed from the OFF position and the Intelligent Key is not recognized by the system. You cannot start the engine with an unregistered key.

For additional information, see "NISSAN Intelligent Key®" (P. 3-7).

Key System Error: See Owner's Manual

After the ignition switch is placed in the ON position, this warning appears for a period of time and then turns off.

The Key System Error message warns of a malfunction with the Intelligent Key system. If the warning appears while the engine is stopped, it may be impossible to start the engine.

If the warning appears while the engine is running, you can drive the vehicle. However, in these cases, have the system checked. It is recommended that you visit a NISSAN dealer for this service.

No Key Detected

This warning appears when the Intelligent Key is left outside the vehicle with the ignition switch in the ON position. Make sure the Intelligent Key is inside the vehicle.

For additional information, see "NISSAN Intelligent Key®" (P. 3-2).

Brightness indicator

This indicator appears when the vehicle information display screen brightness is being adjusted.

Alarm— Time for a driver break

This indicator appears when the set time is reached. The time can be set up to six hours. For additional information, see "Settings" (P. 2-21).

Chassis Control System Error: See Owner's Manual

This warning appears if there is an error in the Automatic Brake Hold system. Have the system checked. It is recommended that you visit a NISSAN dealer for this service. For additional information, see "Chassis control" (P. 5-178) or "Automatic brake hold" (P. 5-27).

Rear Door Alert is activated

When the system is enabled, this message appears when the Rear Door Alert system is active and can remind the driver to check the back seat.

- Using the steering wheel switch, a driver can select "Dismiss Message" to clear the display for a period of time. If no selection is made, this message automatically turns off after a period of time.
- Using the steering wheel switch, a driver can select "Disable Alert" to disable the horn alert for the remainder of the current trip.

⚠ WARNING

Selecting "Dismiss Message" during a stop within a trip temporarily dismisses the message for that stop without turning the system off. Alerts can be provided for other stops during the trip. Selecting "Disable Alert" turns off the Rear Door Alert system for the remainder of a trip and no audible alert will be provided.

NOTE:

This system is disabled until a driver enables it using the vehicle information display. For additional information, see "How to use the vehicle information display" (P. 2-19).

For additional information, see "Rear Door Alert" (P. 2-67).

Check Rear Seat For All Articles

When the system is enabled, this message appears when the vehicle comes to a complete stop, the vehicle is transitioned from the D (Drive) position to P (Park) position, and the driver exits the vehicle. This message alerts the driver, after a period of time, to check for items in the rear seat after the audible alert has been provided.

NOTE:

This system is disabled until a driver enables it using the vehicle information display. For additional information, see "How to use the vehicle information display" (P. 2-19).

For additional information, see "Rear Door Alert" (P. 2-67).

Door/Trunk Open

This warning appears when a door or the trunk has been opened.

Drive sport mode indicator

A small "S" appears to the right of the Transmission Shift Position indicator in the vehicle information display when the drive sport mode is engaged.

Activate the drive sport mode by pushing the switch on the shift lever while the shift lever is in the D (Drive) position.

For additional information, see "Driving the vehicle" (P. 5-18).

Engine Oil Service due in – – – miles

This distance to oil change will display if the distance to oil change is approximately 1,000 miles (1,600 km) or less. Several reminders will display until the remaining distance is 0.

Engine Oil Service due now

This message will be displayed when remaining distance is 0, indicating service is now due/overdue. After service is completed, the Oil Control System should be reset from the Maintenance settings menu.

Loose Fuel Cap

This warning appears when the fuel-filler cap is not tightened correctly after the vehicle has been refueled. For additional information, see "Fuel-filler door" (P. 3-25).

Low Fuel

This warning appears when the fuel level in the fuel tank is getting low. Refuel as soon as it is convenient, preferably before the fuel gauge reaches 0 (Empty). **There will be a small reserve of fuel in the tank when the fuel gauge needle reaches 0 (Empty).**

Low Oil Pressure Stop Vehicle

This warning appears if low oil pressure is detected.

If the warning appears during normal driving, pull off the road in a safe area and stop the engine **immediately**. Have the system checked. It is recommended that you visit a NISSAN dealer or other authorized repair shop for this service.

The low oil pressure warning is not designed to indicate a low oil level. Use the dipstick to check the oil level. For additional information, see "Engine oil" (P. 8-7).

Low outside temperature indicator

This indicator appears if the outside temperature is below 37°F (3°C). The temperature can be changed to display in Fahrenheit or Celsius. For additional information, see "Unit" (P. 2-27).

Low Washer Fluid

This warning appears when the windshield-washer fluid is at a low level. Add windshield-washer fluid as necessary. For additional information, see "Windshield-washer fluid" (P. 8-13).

Power will turn off to save the battery

This message appears after a period of time if the ignition switch is in the ON position and if the vehicle is in P (Park). For additional information, see "Push-button ignition switch positions" (P. 5-14).

Power turned off to save the battery

This message appears after the ignition switch is automatically turned off. For additional information, see "Push-button ignition switch positions" (P. 5-14).

Push brake and start button to drive

This indicator appears when the shift lever is in the P (Park) position and the vehicle has not been started. Start the engine by pushing the ignition switch with the brake pedal depressed. You can start the engine from any position of the ignition switch.

This message also appears when the vehicle has been started using the Remote Engine Start function (if so equipped). Push the ignition switch with the brake pedal depressed to place the ignition switch in the ON position. For additional information, see "Remote Engine Start" (P. 3-19).

Reminder Turn OFF Headlights

This warning appears when the headlights are left in the ON position when exiting the vehicle. Place the headlight switch in the OFF or AUTO position. For additional information, see "Headlight and turn signal switch" (P. 2-57).

Release Parking Brake

This warning appears when the parking brake is set and the vehicle is driven.

Shift to Park

This warning appears when the ignition switch is in the AUTO ACC or OFF position and the shift lever is not in the P (Park) position. Also, a chime sounds when the ignition switch is in the AUTO ACC or OFF position.

If this warning appears, move the shift lever to the P (Park) position and start the engine.

Shipping Mode On Push Storage Fuse

This warning may appear if the extended storage switch is not pushed in. When this warning appears, push in the extended storage switch to turn off the warning. For additional information, see "Extended storage switch" (P. 2-70).

Tire Pressure Low - Add Air

This warning appears when the low tire pressure warning light in the meter illuminates and low tire pressure is detected. The warning appears each time the ignition switch is placed in the ON position as long as the low tire pressure warning light remains illuminated. If this warning appears, stop the vehicle and adjust the tire pressures of all four tires to the recommended COLD tire pressure shown on the Tire and Loading Information label. For additional information, see "Low tire pressure warning light" (P. 2-13) and "Tire Pressure Monitoring System (TPMS)" (P. 5-5).

Transmission Shift Position indicator

This indicator shows the transmission shift position.

Service CVT

This warning appears when there is a problem with the CVT system. If this warning appears, have the system checked. It is recommended that you visit a NISSAN dealer for this service.

CVT hot Power reduced

This transmission has a high fluid temperature protection mode. If the fluid temperature becomes too high (for example, climbing steep grades in high temperatures with heavy loads, such as when towing a trailer), engine power and, under some conditions, vehicle speed will be decreased automatically to reduce the chance of transmission damage. Vehicle speed can be controlled with the accelerator pedal, but the engine and vehicle speed may be reduced.

WARNING

When the high fluid temperature protection mode operation occurs, vehicle speed may be gradually reduced. The reduced speed may be lower than other traffic, which could increase the chance of a collision. Be especially careful when driving. If necessary, pull to the side of the road at a safe place and allow the transmission to return to normal operation; or have it repaired if necessary.

CVT (AT) Malfunction Service now

This warning appears when there is a problem with the CVT system. If this warning comes on, have the system checked. It is recommended that you visit a NISSAN dealer for this service.

CVT (AT) Stop the vehicle

This message appears 30 seconds before the vehicle is shut down due to an above normal operating transmission temperature. The Malfunction Indicator Light (MIL)

and malfunction warning (red) will illuminate. Have the system checked. It is recommended that you visit a NISSAN dealer immediately for this service.

Engine Stalled: Stop safely

This message appears 30 seconds before the vehicle is shut down due to an above normal operating exhaust temperature. The Malfunction Indicator Light (MIL) and malfunction warning (red) will illuminate. Have the system checked. It is recommended that you visit a NISSAN dealer immediately for this service.

Engine Malfunction Power reduced Service now

This warning appears when the engine is not operating under normal conditions. If this warning appears, have the system checked. It is recommended that you visit a NISSAN dealer for this service.

Engine Malfunction Service now

This warning appears when there is a problem with the engine. If this warning appears, have the system checked. It is recommended that you visit a NISSAN dealer for this service.

Engine hot Power reduced

This engine has a high fluid temperature protection mode. If the fluid temperature becomes too high (for example, climbing steep grades in high temperatures with heavy loads, such as when towing a trailer), engine power and, under some conditions, vehicle speed will be decreased automatically to reduce the chance of engine damage. Vehicle speed can be controlled with the accelerator pedal, but the engine and vehicle speed may be reduced.

⚠WARNING

When the high fluid temperature protection mode operation occurs, vehicle speed may be gradually reduced. The reduced speed may be lower than other traffic, which could increase the chance of a collision. Be especially careful when driving. If necessary, pull to the side of the road at a safe place and allow the engine to return to normal operation; or have it repaired if necessary.

Automatic Emergency Braking (AEB) with Pedestrian Detection emergency warning indicator

This indicator appears along, with an audible warning, when the system detects the possibility of a forward collision.

For additional information, see "Automatic Emergency Braking (AEB) with Pedestrian Detection" (P. 5-135).

Blind Spot Warning (BSW) indicator

This indicator appears when the BSW system is engaged.

For additional information, see "Blind Spot Warning (BSW)" (P. 5-46).

Cruise control indicator

This indicator shows the cruise control system status.

When cruise control is activated, a green circle will appear to indicate it is set. The vehicle information display will also display the speed the cruise control was set at. If you accelerate past the set speed, the speed will blink until you either cancel cruise control or go back to the set speed. If

cruise control is on and canceled, the speed will be displayed to show the speed the vehicle will return to if the resume button is activated.

Forward Driving Aids Temporarily Disabled Front Sensor Blocked See Owner's Manual

This message appears when the front radar sensor may be obstructed due to:

- mud, dirt, snow, ice, etc.
- inclement weather (rain, fog, snow, etc.).

All forward driving aids are temporarily disabled until the system detects that the front radar sensor is no longer obstructed.

For additional information, see:

- Automatic Emergency Braking (AEB) with Pedestrian Detection (P. 5-135).
- Intelligent Forward Collision Warning (I-FCW) (P. 5-147).

Driver Attention Alert Malfunction

This warning appears when the Intelligent Driver Alertness (I-DA) system is not functioning properly. For additional information, see "Intelligent Driver Alertness (I-DA)" (P. 5-162).

Intelligent Driver Alertness— Take a break?

This alert appears when the system has detected that the driver may be displaying fatigue or a lack of attention.

Lane Departure Warning (LDW) indicator

This indicator appears when the LDW system is engaged.

For additional information, see "Lane Departure Warning (LDW)" (P. 5-33).

Malfunction See Owner's Manual

This warning appears when one of the following systems (if so equipped) is not functioning properly:

- Automatic Emergency Braking (AEB) with Pedestrian Detection
- Blind Spot Warning (BSW)
- Driver Attention Alert
- Intelligent Forward Collision Warning (I-FCW)
- Lane Departure Warning (LDW)
- Rear Automatic Braking (RAB)
- Rear Cross Traffic Alert (RCTA)

If one or more of these warning appears, have the system checked. It is recommended that you visit a NISSAN dealer for this service.

For additional information, see "Automatic Emergency Braking (AEB) with Pedestrian Detection" (P. 5-135), "Blind Spot Warning (BSW)" (P. 5-46), "Intelligent Driver Alertness (I-DA)" (P. 5-162), "Intelligent Forward Collision Warning (I-FCW)" (P. 5-147), "Lane Departure Warning (LDW)" (P. 5-33), "Rear Automatic Braking (RAB)" (P. 5-127) and "Rear Cross Traffic Alert (RCTA)" (P. 5-58).

Parking Sensor Error: See Owner's Manual

This warning appears when there is an error with the system. For additional information, see "Rear Sonar System (RSS)" (P. 5-180).

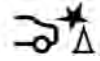

Rear Automatic Braking (RAB) indicator

This indicator appears to indicate the status of the Rear Automatic Braking (RAB) system. For additional information, see "Rear Automatic Braking (RAB)" (P. 5-127).

Unavailable High Cabin Temperature

This message appears when the camera detects an interior temperature of more than 104°F (40°C). For additional information, see "Automatic Emergency Braking (AEB) with Pedestrian Detection" (P. 5-135) or "Lane Departure Warning (LDW)" (P. 5-33).

Unavailable Side Radar Obstruction

This message appears when the Blind Spot Warning (BSW)/Rear Cross Traffic Alert (RCTA) systems become unavailable because a radar blockage is detected. For additional information, see "Blind Spot Warning (BSW)" (P. 5-46) or "Rear Cross Traffic Alert (RCTA)" (P. 5-58).

Vehicle ahead detection indicator

This indicator shows when the following systems are engaged and have detected a vehicle:

- Automatic Emergency Braking (AEB) with Pedestrian Detection
- Intelligent Forward Collision Warning (I-FCW)

For additional information, see "Automatic Emergency Braking (AEB) with Pedestrian Detection" (P. 5-135) or "Intelligent Forward Collision Warning (I-FCW)" (P. 5-147).

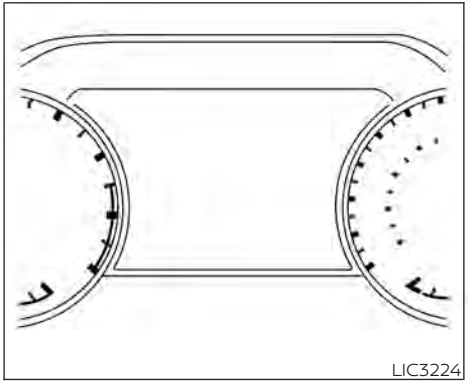

The vehicle information display is located to the left of the speedometer. It displays such items as:

- Vehicle settings
- Indicators and warnings
- Information/warning messages
- Tire pressure information
- Drive computer information
- Cruise control system information
- Driving Aids (if so equipped)
- ProPILOT (if so equipped)
- NISSAN Intelligent Key® operation information
- Audio information
- Compass and navigation information (if so equipped)
- Variable Compression Turbo information (if so equipped)
- Shift position
- Distance to empty
- Odometer/twin trip odometer
- Clock and outside temperature

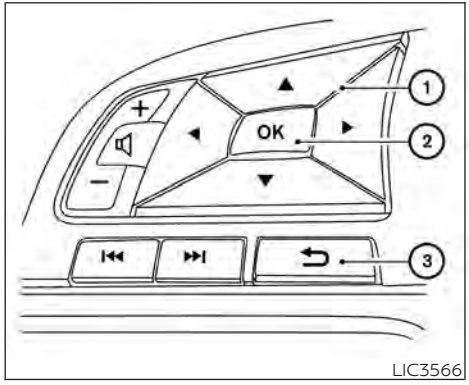

HOW TO USE THE VEHICLE INFORMATION DISPLAY

The vehicle information display can be changed using the ◀ ▶ ▼ ▲ , ⮌ , and OK buttons located on the steering wheel.

① ◀ ▶ ▼ ▲ - Use these buttons to navigate the vehicle information display.

② OK - Change or select an item in the vehicle information display.

③ ⮌ — Returns to the previous menu.

The OK, ◀ ▶ and ⮌ buttons also control audio and control panel functions in some conditions. Most screens and menus offer instruction prompts of the steering switch buttons to indicate how to control the vehicle information display. Dots on the right side of the vehicle information display will appear if there is more than one page of menu items or warning messages. The OK button changes the audio source and the ▼ ▲ buttons also control voice recognition manual mode. The OK button can be used to change the audio source when the audio screen is displayed. The ▼ ▲ buttons can be used when controlling voice recognition prompts manually. For additional information, refer to the separate NissanConnect® Owner's Manual.

STARTUP DISPLAY

When the vehicle in placed in the ON position the vehicle information display may display the following screens (if so equipped):

- Home
- Drive Computer — Speed, Fuel Economy, Trip Distance & Time
- Convenience
- Tire Pressure
- Variable Compression Turbo
- Speed Limit Sign
- Compass and Navigation
- Audio/telephone
- ProPILOT
- Driving Aids
- Settings
- Warnings*

*Warnings will only display if there are any present. For additional information, see "Vehicle information display warnings" (P. 2-45).

To control what items display in the vehicle information display, see "How to use the vehicle information display" (P. 2-35).

RESETTING THE DRIVE COMPUTER

The drive computer is divided across three screens:

- Average Speed
- Average Fuel Economy
- Trip Distance & Time

1. Press the ◀ ▶ ▼ ▲ buttons until you reach the desired drive computer mode.

2. Press and hold the OK button for approximately 1 second to reset the information on the currently displayed screen.

NOTE:

If you wish to reset all drive computer values at once, press and hold the OK button for approximately 3 seconds until a reset menu appears; and follow the instructions.

OIL CONTROL SYSTEM (if so equipped)

The oil control system can be accessed in the Maintenance portion of the vehicle information display settings.

Engine oil information informs the distance to oil change. Never exceed one year or 7,500 miles (12000 km) between oil change intervals for the 2.0L 4 cylinder (KR20DDET engine model) or 10,000 miles (16,000 km) between oil change intervals for the 2.5L 4 cylinder (PR25DD engine model).

Display when ignition is ON	Display timing	Action Required
Engine Oil Service due in xxx miles	Remaining oil life is less than 940 miles (1500 km).	Plan to have your vehicle serviced.
Engine Oil Service due	Remaining oil life is 0 miles (0 km).	Have your vehicle serviced within two weeks or less than 500 miles (800 km).

The oil change interval cannot be adjusted manually.

The distance to oil change interval is calculated depending on the driving conditions and set automatically by the oil control system. A reminder will be displayed when approaching the end of the service interval.

When the Factory Reset option is selected in the vehicle information display, the oil control system will also be reset to initial value. Please change the engine oil when Factory Reset is selected.

⚠ CAUTION

If the oil replacement indicator is displayed, change the engine oil within two weeks or less than 500 miles (800 km).

Operating the vehicle with deteriorated oil can damage the engine.

To reset oil control system:

1. Push ignition button to "ON" position.
2. Push the ◄ and ► buttons located on the steering wheel until "Settings" displays in the vehicle information display. Use the ▼ ▲ buttons to select "Maintenance". Then, press the OK button.
3. Select the "Oil Control System" and press the OK button.
4. Press the OK button according to the reset instructions displayed at the bottom of the "Oil Control System" maintenance screen.

For additional information, see "Oil control system" (P. 9-7).

SETTINGS

The setting mode allows you to change the information displayed in the vehicle information display. It also allows you to change vehicle functions:

- VDC Setting
- Driver Assistance
- TPMS Setting
- Clock
- Vehicle Settings
- Maintenance
- Customize Display
- Unit/Language
- Key-Linked Settings (if so equipped)
- Factory Reset

VDC Setting

The VDC Setting menu allows the user to enable or disable the Vehicle Dynamic Control (VDC) system.

Menu item	Explanation
System	Allows the user to turn the VDC system on or off. For additional information, see "Vehicle Dynamic Control (VDC) system" (P. 5-175).

Driver Assistance

The driver assistance menu allows the user to change the settings for driving, parking, and braking aids.

Some menu items shown below may not be equipped on your vehicle.

Menu item		Explanation
Steering Assist		Allows user to turn the Steering Assist of the ProPILOT Assist system on or off. For additional information, please see "ProPILOT Assist" (P. 5-94).
Emergency Brake		Displays available emergency braking options.
	Front	Allows user to turn the front emergency braking system on or off. For additional information, see "Automatic Emergency Braking (AEB) with Pedestrian Detection" (P. 5-135) and "Intelligent Forward Collision Warning (I-FCW)" (P. 5-147).
	Rear	Allows user to turn the rear emergency braking system on or off. For additional information, see "Rear Automatic Braking (RAB)" (P. 5-127).
Lane		Displays available lane options.
	Lane Departure Warning	Allows user to turn the Lane Departure Warning (LDW) system on or off. For additional information, see "Lane Departure Warning (LDW)" (P. 5-33).
	Lane Departure Prevention	Allows user to turn Intelligent Lane Intervention (I-LI) system on or off. For additional information, see "Intelligent Lane Intervention (I-LI)" (P. 5-40).
Blind Spot		Displays available blind spot options.
	Blind Spot Warning	Allows user to turn the Blind Spot Warning (BSW) system on or off. For additional information, see "Blind Spot Warning (BSW)" (P. 5-46).
	Side Indicator Brightness	Allows user to change the brightness of the side indicator.
Speed Limit Sign		Allows user to turn the Speed Limit Sign recognition on or off. For additional information, see "Traffic Sign Recognition (TSR)" (P. 5-30).
Parking Aids		Displays available parking aids.
	Auto Show Sonar	Allows user to auto display the sonar. For additional information, see "Rear Sonar System (RSS)" (P. 5-179).
	Rear	Allows user to turn the rear sonar on or off.
	Distance	Allows user to set the distance sensor range to Long/Medium/Short.
	Volume	Allows the user to set the parking sensor volume to High/Medium/Low.

Menu item		Explanation
Rear Cross Traffic Alert		Allows user to turn the Rear Cross Traffic Alert (RCTA) system on or off. For additional information, see “Rear Cross Traffic Alert (RCTA)” (P. 5-58).
Driver Attention Alert		Allows user to turn the Intelligent Driver Alertness on or off. For additional information, see “Intelligent Driver Alertness (I-DA)” (P. 5-162).
Timer Alert		Allows user to set the timer alert.
Low Temperature Alert		Allows user to turn the low temperature alert on or off.
Chassis Control		Displays available chassis control options.
	Active Trace Control	Allows user to turn the Intelligent Trace Control system on or off. For additional information, see “Intelligent Trace Control (I-TC)” (P. 5-178).

TPMS Setting

The TPMS settings menu allows the user to change the tire pressure units displayed in the vehicle information display.

Menu item		Explanation
TPMS Setting		Displays available TPMS settings.
	Tire Pressure Unit	Allows user to select the tire pressure units that will display in the vehicle information display.

Clock

Menu item	Explanation
Clock	Allows user to adjust the clock settings and time within the vehicle information display. Adjustments that can be made include automatically setting the time, 12H/24H format, Daylight Saving Time, time zone, and manually setting the time. The clock can also be set within the center display. For additional information, refer to the separate NissanConnect® Owner’s Manual.

Vehicle Settings

The vehicle settings allow the user to change the settings for lights, wipers, locking, keys, and other vehicle settings.

Some menu items shown below may not be equipped on your vehicle.

Menu item			Explanation
Lighting			Displays the available lighting options.
	Welcome Headlight		Allows user to turn the welcome light on or off.
	Auto Room Lamp		Allows user to turn the auto room lamp on or off.
	Accent Lighting		Allows user to adjust the accent lighting brightness.
	Auto Headlight		Allows user to change when the auto headlights activate based on the exterior brightness.
	Light Off Delay		Allows user to change the length of time the exterior lights remain on.
Turn indicator			Displays the available turn indicator options.
	3 Flashes		Allows user to turn the 3 flash pass feature on or off.
	Continuous		Allows user to adjust the continuous feature.
Locking			Displays the available locking options.
	Ext Door Switch		Allows user to turn the exterior door switch on or off. When turned on, the request switch on the door is activated.
	Selective Unlock		Allows user to turn selective unlock on or off. When turned on, only the driver's door is unlocked after the door unlock operation. When the door handle request switch on the driver's or front passenger's side door is pushed to be unlocked, only the corresponding door is unlocked first. All the doors can be unlocked if the door unlock operation is performed again within 60 seconds. When this item is turned off, all the doors will be unlocked after the door unlock operation is performed once.
	Auto Door Unlock		Displays the auto door unlock options.
		Shift to P	Doors will unlock when the vehicle is shifted into P (Park).
		IGN OFF	Doors will unlock when the ignition is turned off.
		OFF	Doors will have to be manually unlocked.
	Horn beeps on lock		Allows user to turn answer back horn on or off. When turned on, the horn will chirp and the hazard indicators will flash twice when locking the vehicle with the Intelligent Key.

Menu item		Explanation
Wipers		Displays the available wiper options.
	Speed Dependent	Allows user to turn wiper with speed on or off.
Driving Position		Displays the available driving position options.
	Exit Seat Slide	Allows the user to turn the exit seat slide on or off. When turned on, this feature will move the driver's seat backward for an easy exit when the ignition is turned off and the driver's door is opened. After getting into the vehicle and placing the ignition switch in the ON position, the driver's seat will move to the previous set position. For additional information, see "Memory seat" (P. 3-31).
Rear Door Alert		Displays the available Rear Door Alert options. For additional information, see "Rear Door Alert" (P. 2-67).
	Horn & Alert	When selected, the alert is displayed and horn sounds.
	Alert Only	When selected, only the alert is displayed.
	OFF	When selected, no alert or horn will be active.
Remote Engine Start		Allows user to turn the Remote Engine Start on or off. When turned on, the engine can be restarted remotely. For additional information, see "Remote Engine Start" (P. 5-17).

Maintenance

The maintenance menu allows the user to set reminders for various vehicle maintenance items.

⚠ WARNING

The tire replacement indicator is not a substitute for regular tire checks, including tire pressure checks. For additional information, see "Changing wheels and tires" (P. 8-39). Many factors including tire inflation, alignment, driving habits and road conditions affect tire wear and when tires should be replaced. Setting the tire replacement indicator for a certain driving distance does not mean your tires will last that long. Use the tire replacement indicator as a guide only and always perform regular tire checks. Failure to perform regular tire checks, including tire pressure checks could result in tire failure. Serious vehicle damage could occur and may lead to a collision, which could result in serious personal injury or death.

Menu item		Explanation
Maintenance		Displays various maintenance reminder options.
	Oil Control System	Allows user to reset the current interval. This should only be done after completing oil change maintenance.
	Oil and Filter	Allows user to set a reminder at a specific interval or reset the current one.
	Tire	Allows user to set a reminder at a specific interval or reset the current one.
	Other	Allows user to set a reminder at a specific interval or reset the current one.

Customize Display

The customize display menu allows the user to customize the information that appears in the vehicle information display.

Some menu items shown below may not be equipped on your vehicle.

Menu item		Explanation
Main Menu Selection		Displays available screens that can be shown in the vehicle information display.
	Home	Allows user to turn the home screen on or off in the vehicle information display.
	Blank	Allows user to turn the blank on or off in the vehicle information display.
	Audio	Allows user to turn the audio controls screen on or off in the vehicle information display.
	Navigation	Allows user to turn the navigation screen on or off in the vehicle information display.
	Fuel Economy	Allows user to turn the fuel economy screen on or off in the vehicle information display.
	Chassis Control	Allows user to turn the chassis control screen on or off in the vehicle information display.
	Cruise	Allows user to turn the cruise control screen on or off in the vehicle information display.
	Speed Limit Sign	Allows user to turn the speed limit sign screen on or off in the vehicle information display.
	TPMS	Allows user to turn the TPMS screen on or off in the vehicle information display.
	Variable Compression Turbo	Allows user to turn the Variable Compression Turbo screen on or off in the vehicle information display.
	Speed	Allows user to turn the speedometer screen on or off in the vehicle information display.
	Drive Computer	Allows user to turn the drive computer screen on or off in the vehicle information display.
Auto Turn Notification		Displays the available auto turn notification settings.
	Alerts	Allows user to turn the auto turn notification alerts on or off.
Cruise Screen Transition		Allows user to turn the cruise screen transition on or off.
Welcome Effect		Displays the available welcome effect settings.
	Gauges	Allows user to turn the gauges effect on or off.
	Animation	Allows user to turn the animation effect on or off.
Light/Wiper Guidance		Displays the available light and wiper guidance settings.
	Lights mode guidance	Allows user to turn the light mode guidance on or off.
	Wiper mode guidance	Allows user to turn the wiper mode guidance on or off.

Unit/Language

The unit/language menu allows the user to change the units shown in the vehicle information display.

Menu item	Explanation
Mileage/Fuel	Displays the available mileage/fuel display units and allows user to select preferred unit for display.
Tire Pressure	Allows user to select the tire pressure display units. Changing the tire pressure units will also change the units displayed for the Variable Compression Turbo (if so equipped).
Temperature	Allows user to select the temperature display units.
Language	Displays the available language options and allows user to select preferred language for display.

Key-Linked Settings (if so equipped)

Menu item	Explanation
Key-Linked Settings	Allows user to turn the Key-Linked Settings on or off. For additional information, see "Memory storage function" (P. 3-31).

Factory Reset

The factory reset menu allows the user to restore the vehicle information display settings to factory status.

Menu item	Explanation
Factory Reset	Allows user to reset the vehicle information display settings to the original factory settings. Once selected, the user can confirm or cancel the reset.

VEHICLE INFORMATION DISPLAY WARNINGS AND INDICATORS

The following messages may appear in your vehicle information display.

Place the key near the start switch

This indicator appears when the battery of the Intelligent Key is low and when the Intelligent Key system and the vehicle are not communicating normally.

If this appears, touch the ignition switch with the Intelligent Key while depressing the brake pedal. For additional information, see "Battery replacement" (P. 8-23).

Key Battery Low

This indicator appears when the Intelligent Key battery is running out of power.

If this indicator appears, replace the battery with a new one. For additional information, see "Battery replacement" (P. 8-23).

Key ID Incorrect

This warning appears when the ignition switch is placed from the OFF position and the Intelligent Key is not recognized by the system. You cannot start the engine with an unregistered key.

For additional information, see "NISSAN Intelligent Key®" (P. 3-7).

Key System Error: See Owner's Manual

After the ignition switch is placed in the ON position, this warning appears for a period of time and then turns off.

The Key System Error message warns of a malfunction with the Intelligent Key system. If the warning appears while the engine is stopped, it may be impossible to start the engine.

If the warning appears while the engine is running, you can drive the vehicle. However, in these cases, have the system checked. It is recommended that you visit a NISSAN dealer for this service.

No Key Detected

This warning appears when the Intelligent Key is left outside the vehicle with the ignition switch in the ON position. Make sure the Intelligent Key is inside the vehicle.

For additional information, see "NISSAN Intelligent Key®" (P. 3-7).

Brightness indicator

This indicator appears when the vehicle information display screen brightness is being adjusted.

Chassis Control System Error: See Owner's Manual

This warning appears if there is an error in the Automatic Brake Hold system. Have the system checked. It is recommended that you visit a NISSAN dealer for this service. For additional information, see "Chassis control" (P. 5-178) or "Automatic brake hold" (P. 5-27).

Rear Door Alert is activated

When the system is enabled, this message appears when the Rear Door Alert system is active and can remind the driver to check the back seat.

- Using the steering wheel switch, a driver can select "Dismiss Message" to clear the display for a period of time. If no selection is made, this message automatically turns off after a period of time.
- Using the steering wheel switch, a driver can select "Disable Alert" to disable the horn alert for the remainder of the current trip.

⚠ WARNING

Selecting "Dismiss Message" during a stop within a trip temporarily dismisses the message for that stop without turning the system off. Alerts can be provided for other stops during the trip. Selecting "Disable Alert" turns off the Rear Door Alert system for the remainder of a trip and no audible alert will be provided.

NOTE:

This system is disabled until a driver enables it using the vehicle information display. For additional information, see "How to use the vehicle information display" (P. 2-35).

For additional information, see "Rear Door Alert" (P. 2-67).

Check Rear Seat For All Articles

When the system is enabled, this message appears when the vehicle comes to a complete stop, the vehicle is transitioned from the D (Drive) position to P (Park) position, and the driver exits the vehicle. This message alerts the driver, after a period of time, to check for items in the rear seat after the audible alert has been provided.

NOTE:

This system is disabled until a driver enables it using the vehicle information display. For additional information, see "How to use the vehicle information display" (P. 2-35).

For additional information, see "Rear Door Alert" (P. 2-67).

Door/Trunk Open

This warning appears when a door or the trunk has been opened.

Drive sport mode indicator

A small "S" appears to the right of the Transmission Shift Position indicator in the vehicle information display when the drive sport mode is engaged.

Activate the drive sport mode by pushing the switch on the shift lever while the shift lever is in the D (Drive) position.

For additional information, see "Driving the vehicle" (P. 5-18).

Engine Oil Service due in – – – miles

This distance to oil change will display if the distance to oil change is approximately 1,000 miles (1,600 km) or less. Several reminders will display until the remaining distance is 0.

Engine Oil Service due now

This message will be displayed when remaining distance is 0, indicating service is now due/overdue. After service is completed, the Oil Control System should be reset from the Maintenance settings menu.

Headlight System Error: See Owner's Manual

This warning appears when there is an error with the system. For additional information, see "Headlight and turn signal switch" (P. 2-57).

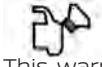

Loose Fuel Cap

This warning appears when the fuel-filler cap is not tightened correctly after the vehicle has been refueled. For additional information, see "Fuel-filler cap" (P. 3-25).

Low Fuel

This warning appears when the fuel level in the fuel tank is getting low. Refuel as soon as it is convenient, preferably before the fuel gauge reaches 0 (Empty). **There will be a small reserve of fuel in the tank when the fuel gauge needle reaches 0 (Empty).**

Low outside temperature indicator

This indicator appears if the outside temperature is below 37°F (3°C). The temperature can be changed to display in Fahrenheit or Celsius. For additional information, see "Unit" (P. 2-27).

Low Washer Fluid

This warning appears when the windshield-washer fluid is at a low level. Add windshield-washer fluid as necessary. For additional information, see "Windshield-washer fluid" (P. 8-13).

Power will turn off to save the battery

This message appears after a period of time if the ignition switch is in the ON position and if the vehicle is in P (Park). For additional information, see "Push-button ignition switch positions" (P. 5-14).

Power turned off to save the battery

This message appears after the ignition switch is automatically turned off. For additional information, see "Push-button ignition switch positions" (P. 5-14).

Press Brake Pedal

This message may appear in the following situations:

- The driver tries to release the electronic parking brake manually without depressing the brake pedal.
- The vehicle is stopped on a steep hill; and there is a possibility of moving backwards, even if the electronic parking brake is applied.
- The vehicle moves while the automatic brake hold is activated.

For additional information, see "Electronic parking brake" (P. 5-25).

Push brake and start switch to drive

This indicator appears when the shift lever is in the P (Park) position and the vehicle has not been started. Start the engine by pushing the ignition switch with the brake pedal depressed. You can start the engine from any position of the ignition switch.

This message also appears when the vehicle has been started using the Remote Engine Start function (if so equipped). Push the ignition switch with the brake pedal depressed to place the ignition switch in the ON position. For additional information, see "Remote Engine Start" (P. 3-19).

Release Parking Brake

This warning appears when the parking brake is set and the vehicle is driven.

Reminder: Turn OFF Headlights

This warning appears when the headlights are left in the ON position when exiting the vehicle. Place the headlight switch in the OFF or AUTO position. For additional information, see "Headlight and turn signal switch" (P. 2-57)

Shift to Park

This warning appears when the ignition switch is in the AUTO ACC or OFF position and the shift lever is not in the P (Park) position. Also, a chime sounds when the ignition switch is in the AUTO ACC or OFF position.

If this warning appears, move the shift lever to the P (Park) position and start the engine.

Shipping Mode On Push Storage Fuse

This warning may appear if the extended storage switch is not pushed in. When this warning appears, push in the extended storage switch to turn off the warning. For additional information, see "Extended storage switch" (P. 2-70).

Timer Alert Time for a break?

This message appears when the set time is reached. This time can be set up to six hours. For additional information, see "Driver Assistance" (P. 2-38)

Tire Pressure Low - Add Air

This warning appears when the low tire pressure warning light in the meter illuminates and low tire pressure is detected. The warning appears each time the ignition switch is placed in the ON position as long as the low tire pressure warning light remains illuminated. If this warning appears, stop the vehicle and adjust the tire pressures of all four tires to the recommended COLD tire pressure shown on the Tire and Loading Information label. For additional information, see "Low tire pressure warning light" (P. 2-13) and "Tire Pressure Monitoring System (TPMS)" (P. 5-5).

P Transmission Shift Position indicator

This indicator shows the transmission shift position.

AWD AWD Error: See Owner's Manual

This warning appears when the All-Wheel Drive (AWD) system is not functioning properly while the engine is running.

AWD AWD High Temp. Stop Vehicle

This warning may appear while trying to free a stuck vehicle due to increased oil temperature. The driving mode may change to 2-Wheel Drive (2WD). If this warning is displayed, stop the vehicle with the engine idling, as soon as it is safe to do so. Then if the warning turns off, you can continue driving.

AWD Tire Size Incorrect See Owner's Manual

This warning may appear if there is a large difference between the diameters of the front and rear wheels. Pull off the road in a safe area, with the engine idling. Check that all the tire sizes are the same, that the tire pressure is correct and that the tires are not excessively worn.

CVT CVT (AT) Malfunction Service now

This warning appears when there is a problem with the CVT system. If this warning appears, have the system checked. It is recommended that you visit a NISSAN dealer for this service.

CVT CVT (AT) hot Power reduced

This transmission has a high fluid temperature protection mode. If the fluid temperature becomes too high (for example, climbing steep grades in high temperatures with heavy loads, such as when towing a trailer), engine power and, under some conditions, vehicle speed will be decreased automatically to reduce the chance of transmission damage. Vehicle speed can be controlled with the accelerator pedal, but the engine and vehicle speed may be reduced.

⚠ WARNING

When the high fluid temperature protection mode operation occurs, vehicle speed may be gradually reduced. The reduced speed may be lower than other traffic, which could increase the chance of a collision. Be especially careful when driving. If necessary, pull to the side of the road at a safe place and allow the transmission to return to normal operation; or have it repaired if necessary.

CVT (AT) Stop the vehicle

This message appears 30 seconds before the vehicle is shut down due to an above normal operating transmission temperature. The Malfunction Indicator Light (MIL) and malfunction warning (red) will illuminate. Have the system checked. It is recommended that you visit a NISSAN dealer immediately for this service.

Automatic Emergency Braking (AEB) with Pedestrian Detection emergency warning indicator

This indicator appears along, with an audible warning, when the system detects the possibility of a forward collision.

For additional information, see "Automatic Emergency Braking (AEB) with Pedestrian Detection" (P. 5-135).

Blind Spot Warning (BSW) indicator

This indicator appears when the BSW system is engaged.

For additional information, see "Blind Spot Warning (BSW)" (P. 5-46).

Cruise control indicator

This indicator shows the cruise control system status.

When cruise control is activated, a green circle will appear to indicate it is set. The vehicle information display will also display the speed the cruise control was set at. If you accelerate past the set speed, the speed will blink until you either cancel cruise control or go back to the set speed. If cruise control is on and canceled, the speed will be displayed to show the speed the vehicle will return to if the resume button is activated.

Currently not available

This message may appear when the ProPILOT Assist system or the Intelligent Lane Intervention (I-LI) system is engaged.

Under the following conditions, the ProPILOT Assist or the Intelligent Lane Intervention (I-LI) system is automatically canceled:

- When the VDC system is turned off

The above system cannot be used in some situations (VDC operates, wheel slip and VDC system is off.)

Driver Attention Alert Malfunction

This warning appears when the Intelligent Driver Alertness (I-DA) system is not functioning properly. For additional information, see "Intelligent Driver Alertness (I-DA)" (P. 5-162).

Driver Attention Alert— Take a Break?

This alert appears when the system has detected that the driver may be displaying fatigue or a lack of attention.

Forward Driving Aids temporarily disabled Front Sensor blocked See Owner's Manual

This message appears when the front radar sensor may be obstructed due to:

- mud, dirt, snow, ice, etc.
- inclement weather (rain, fog, snow, etc.).

All forward driving aids are temporarily disabled until the system detects that the front radar sensor is no longer obstructed.

For additional information, see:

- Automatic Emergency Braking (AEB) with Pedestrian Detection (P. 5-135)
- ProPILOT Assist (P. 5-94)
- Intelligent Forward Collision Warning (I-FCW) (P. 5-147)

Intelligent Cruise Control (ICC) indicators (if so equipped)

These indicators show the Intelligent Cruise Control (ICC) system status. The status is shown by color. For additional information, see "Intelligent Cruise Control (ICC)" (P. 5-71).

Intelligent Lane Intervention (I-LI) indicator

This indicator shows when the I-LI system is engaged.

For additional information, see "Intelligent Lane Intervention (I-LI)" (P. 5-40).

Lane Departure Warning (LDW) indicator

This indicator shows when the LDW system is engaged.

For additional information, see "Lane Departure Warning (LDW)" (P. 5-33) and "Intelligent Lane Intervention (I-LI)" (P. 5-40).

Malfunction

This warning appears when one or more of the following systems (if so equipped) is not functioning properly:

- Automatic Emergency Braking (AEB) with Pedestrian Detection
- Intelligent Forward Collision Warning (I-FCW)

If one or more of these warning appears, have the system checked. It is recommended that you visit a NISSAN dealer for this service.

For additional information, see "Automatic Emergency Braking (AEB) with Pedestrian Detection" (P. 5-135) or "Intelligent Forward Collision Warning (I-FCW) (P. 5-147).

Malfunction: See Owner's Manual

This warning appears when one or more of the following systems (if so equipped) is not functioning properly:

- Traffic Sign Recognition (TSR)
- Rear Automatic Braking (RAB)

If one or more of these warning appears, have the system checked. It is recommended that you visit a NISSAN dealer for this service.

Not Available Parking Brake On

This message may appear when the ProPILOT Assist system is engaged.

Under the following condition, the ProPILOT Assist system is automatically canceled:

- The electronic parking brake is applied.

The above system cannot be used when the electronic parking is activated.

For additional information, see "ProPILOT Assist (P. 5-94) and "Parking brake" (P. 5-25).

Not Available Poor Road Conditions

This message may appear when the ProPILOT Assist system or the Intelligent Lane Intervention (I-LI) system is engaged.

Under the following conditions, the ProPILOT Assist system or the Intelligent Lane Intervention (I-LI) system is automatically canceled:

- When the VDC system is turned off

The above system cannot be used in some situations (VDC operates, wheel slip and VDC system is off.)

Not Available Seat Belt Not Fastened

This message may appear when the ProPILOT Assist system is engaged.

Under the following condition, the ProPILOT Assist system is automatically canceled:

- When the driver's seat belt is not fastened

The above system cannot be used when the driver's seat belt is not fastened.

Not Available System Malfunction

This warning appears when one or more of the following systems (if so equipped) is not functioning properly.

- ProPILOT
- Blind Spot Warning (BSW)
- Lane Departure Warning (LDW)
- Intelligent Lane Intervention (I-LI)

If one or more of these warnings appear, have the system checked. It is recommended that you visit a NISSAN dealer for this service.

For additional information, see ProPILOT Assist" (P. 5-94), "Blind Spot Warning (BSW)" (P. 5-46), "Lane Departure Warning (LDW)" (P. 5-33) or "Intelligent Lane Intervention (I-LI)" (P. 5-40).

Parking Sensor Error: See Owner's Manual

This warning appears when there is an error with the system. For additional information, see "Rear Sonar System (RSS)" (P. 5-180).

ProPILOT Assist indicators

These indicators show the ProPILOT Assist system status. The status is shown by color. For additional information, see "ProPILOT Assist" (P. 5-94).

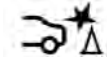

Rear Automatic Braking (RAB) indicator

This indicator appears to indicate the status of the Rear Automatic Braking (RAB) system. For additional information, see "Rear Automatic Braking (RAB)" (P. 5-127).

Speed Limit Sign indicator

This message may appear when the Traffic Sign Recognition system is engaged.

For additional information, see "Traffic Sign Recognition (TSR)" (P. 5-30).

Steering Assist Alert

This message may appear when the Steering Assist system is engaged.

It will be displayed under the following condition:

- When not holding the steering wheel or when there is no steering wheel operation

Please hold on the steering wheel immediately. When the steering operation is detected, the warning turns off and the steering assist function is automatically restored.

Steering Assist indicator

This indicator appears when the Steering Assist system is engaged.

For additional information, see "ProPILOT Assist" (P. 5-94).

Unavailable: High Cabin Temperature

This message appears when the camera detects an interior temperature of more than 104°F (40°C). For additional information, see "Automatic Emergency Braking (AEB) with Pedestrian Detection" (P. 5-135), "ProPILOT Assist" (P. 5-94), "Intelligent Lane Intervention (I-LI)" (P. 5-40), "Lane Departure Warning (LDW)" (P. 5-33) or "Traffic Sign Recognition (TSR) . (P. 5-30).

Unavailable: Side Radar Obstruction

This message appears when the Blind Spot Warning (BSW)/Rear Cross Traffic Alert (RCTA) systems become unavailable because a radar blockage is detected. For additional information, see "Blind Spot Warning (BSW)" (P. 5-46) or "Rear Cross Traffic Alert (RCTA)" (P. 5-58).

Vehicle ahead detection indicator

This indicator shows when the following systems are engaged and have detected a vehicle:

- Automatic Emergency Braking (AEB) with Pedestrian Detection
- Intelligent Forward Collision Warning (I-FCW)

For additional information, see "Automatic Emergency Braking (AEB) with Pedestrian Detection" (P. 5-135) or "Intelligent Forward Collision Warning (I-FCW)" (P. 5-147).

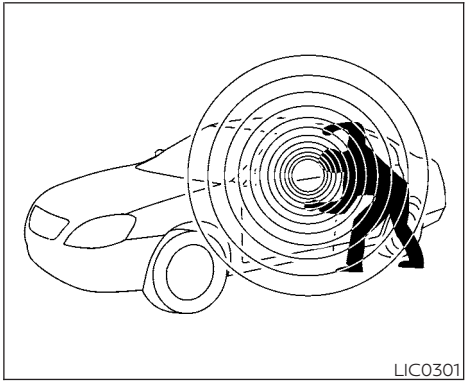

Your vehicle may have two types of security systems:

- Vehicle security system
- NISSAN Vehicle Immobilizer System

VEHICLE SECURITY SYSTEM

The vehicle security system provides visual and audible alarm signals if someone opens the doors or trunk when the system is armed. It is not, however, a motion detection type system that activates when a vehicle is moved or when a vibration occurs.

The system helps deter vehicle theft but cannot prevent it, nor can it prevent the theft of interior or exterior vehicle components in all situations. Always secure your vehicle even if parking for a brief period. Never leave your keys in the vehicle, and always lock the vehicle when unattended. Be aware of your surroundings, and park in secure, well-lit areas whenever possible.

Many devices offering additional protection, such as component locks, identification markers, and tracking systems, are available at auto supply stores and specialty shops. A NISSAN dealer may also offer such equipment. Check with your insurance company to see if you may be eligible for discounts for various theft protection features.

How to arm the vehicle security system

1. Close all windows and the moonroof. **The system can be armed even if the windows and moonroof (if so equipped) are open.**
2. Remove the Intelligent Key from the vehicle.
3. Close all doors, hood and trunk. Lock all doors. The doors can be locked with the Intelligent Key, door handle request switch, or power door lock switch..
4. Confirm that the indicator light comes on. The indicator stays illuminated for a period of time indicating that the system is in the pre-armed phase.
   The indicator light will blink every 3 seconds once the security system is armed.
   If during the pre-armed phase one of the following occurs, the system will not arm:

- Any door is unlocked with the Intelligent Key or door request switch.
- The ignition switch is placed in the ON position.
- **Even when the driver and/or passengers are in the vehicle, the system will activate when all the doors, hood and trunk are locked with the ignition switch placed in the LOCK position. When placing the ignition switch in the AUTO ACC or ON position, the system will be released.**

Vehicle security system activation

The vehicle security system will give the following alarm:

- The headlights blink and the horn sounds intermittently.
- The alarm automatically turns off after a period of time. However, the alarm reactivates if the vehicle is tampered with again. The alarm can be shut off by pressing the button on the Intelligent Key.

The alarm is activated by:

- opening the door or trunk without using Intelligent Key (even if the door is unlocked by releasing the door inside lock knob switch).

How to stop an activated alarm

The alarm stops only by unlocking a door by pressing the button on the Intelligent Key or pushing the request switch on the driver's or passenger's door with the Intelligent Key in range of the door handle.

NISSAN VEHICLE IMMOBILIZER SYSTEM

The NISSAN Vehicle Immobilizer System will not allow the engine to start without the use of a registered key.

If the engine fails to start using a registered key (for example, when interference is caused by another registered key, an automated toll road device or automatic payment device on the key ring), restart the engine using the following procedures:

1. Leave the ignition switch placed in the ON position for approximately 5 seconds.
2. Place the ignition switch in the OFF or LOCK position, and wait approximately 10 seconds.
3. Repeat steps 1 and 2.
4. Restart the engine while holding the device (which may have caused the interference) separate from the registered key.

If the no start condition re-occurs, NISSAN recommends placing the registered key on a separate key ring to avoid interference from other devices.

FCC Notice:

For USA:

This device complies with part 15 of the FCC Rules. Operation is subject to the following two conditions: (1) This device may not cause harmful interference, and (2) this device must accept any interference received, including interference that may cause undesired operation.

NOTE:

Changes or modifications not expressly approved by the party responsible for compliance could void the user's authority to operate the equipment.

For Canada:

This device contains licence-exempt transmitter(s)/receiver(s) that comply with Innovation, Science and Economic Development Canada's licence-exempt RSS(s). Operation is subject to the following two conditions: (1) This device may not cause interference (2) This device must accept any interference, including interference that may cause undesired operation of the device.

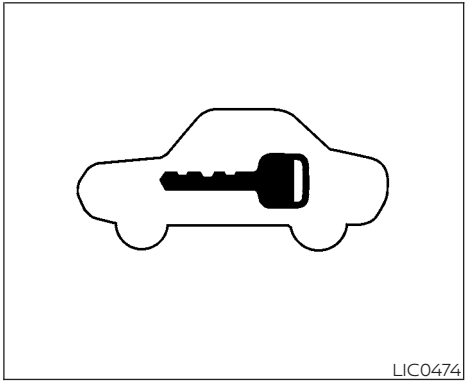

Security indicator light

The security indicator light blinks whenever the ignition switch is placed in the OFF, LOCK or AUTO ACC position.

This function indicates the NISSAN Vehicle Immobilizer System is operational.

If the NISSAN Vehicle Immobilizer System is malfunctioning, the light will remain on while the ignition switch is placed in the ON position.

If the light still remains on and/or the engine will not start, seek service for the NISSAN Vehicle Immobilizer System as soon as possible. Please bring all registered keys that you have. It is recommended that you visit a NISSAN dealer for this service.

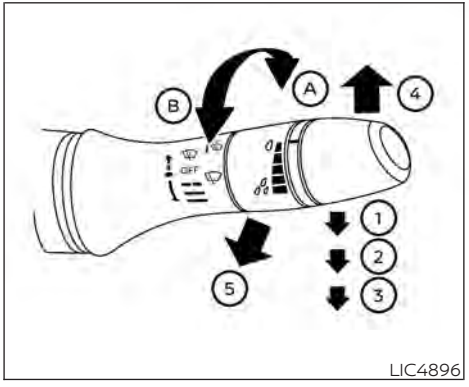

SWITCH OPERATION

WARNING

In freezing temperatures the washer solution may freeze on the windshield and obscure your vision which may lead to an accident. Warm the windshield with the defroster before you wash the windshield.

CAUTION

- **Do not operate the washer continuously for more than 30 seconds.**
- **Do not operate the washer if the windshield-washer fluid reservoir is empty.**
- **Do not fill the windshield-washer fluid reservoir with windshield-washer fluid concentrates at full strength. Some methyl alcohol based windshield-washer fluid concentrates may permanently stain the grille if spilled while filling the windshield-washer fluid reservoir.**
- **Pre-mix windshield-washer fluid concentrates with water to the manufacturer's recommended levels before pouring the fluid into the windshield-washer fluid reservoir. Do not use the windshield-washer fluid reservoir to mix the windshield-washer fluid concentrate and water.**

NOTE:

If the windshield wiper operation is interrupted by snow or ice, the wiper may stop moving to protect its motor. If this occurs, turn the wiper switch to the OFF position and remove the snow or ice that is on and around the wiper arms. In approximately 1 minute, turn the switch on again to operate the wiper.

The windshield wiper and washer operates when the ignition switch is placed in the ON position.

Push the lever down to operate the wiper at the following speed:

① Intermittent — intermittent operation can be adjusted by turning the knob toward Ⓐ (faster) or Ⓑ (slower).

② Low — continuous low speed operation

③ High — continuous high speed operation

Push the lever up ④ to have one sweep operation (MIST) of the wiper.

Pull the lever toward you ⑤ to operate the washer. The wiper will also operate several times.

NOTE:

The Wiper with Speed and Wiper Guidance features may be disabled. For additional information, see "Vehicle information display-5 inch (13 cm) Type A" (P. 2-18) or "Vehicle information display-7 inch (18 cm) Type B" (P. 2-34).

REAR WINDOW AND OUTSIDE MIRROR (if so equipped) DEFROSTER SWITCH

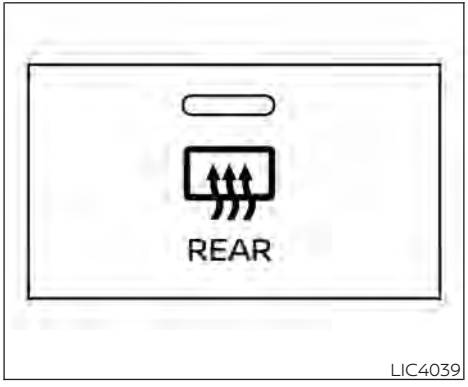

To defrost the rear window glass and outside mirrors (if so equipped), place the ignition switch in the ON position and push the rear window defroster switch on. The rear window defroster indicator light on the switch comes on. Push the switch again to turn the defroster off.

The rear window defroster automatically turns off after approximately 15 minutes.

⚠ CAUTION

When cleaning the inner side of the rear window, be careful not to scratch or damage the rear window defroster.

NOTE:

The top and bottom few rows of wires on the rear window are not part of the rear window defroster system. These wires make up the antenna for the audio system.

HEADLIGHT AND TURN SIGNAL SWITCH

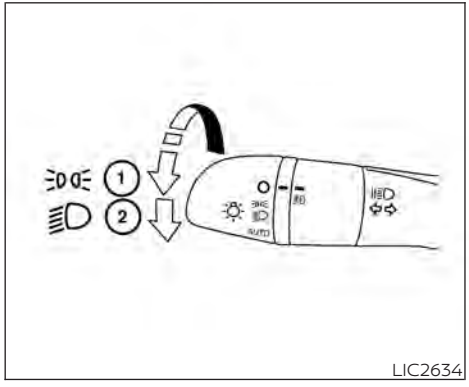

LIC2634

Type A (if so equipped)

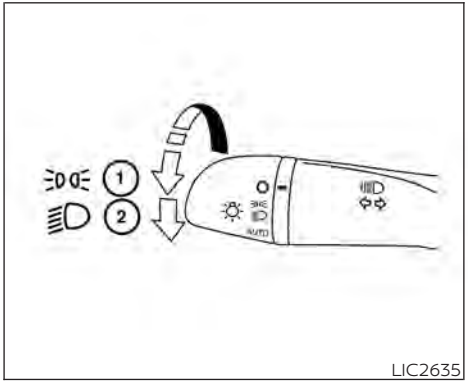

LIC2635

Type B (if so equipped)

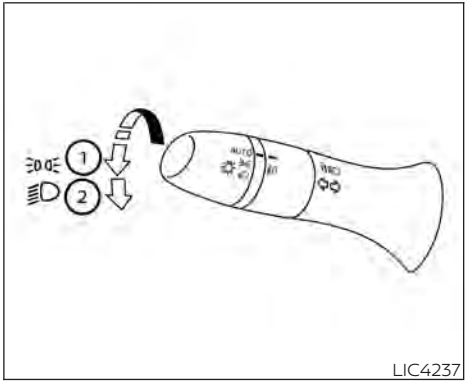

LIC4237

Type C (if so equipped)

HEADLIGHT CONTROL SWITCH

Lighting

① Rotate the switch to the position, and the front parking, tail, license plate, and instrument panel lights will come on. The will illuminate in the meter.

② Rotate the switch to the position, and the headlights will come on and all the other lights remain on.

NOTE:

The Light Guidance feature may be disabled. For additional information, see "Vehicle information display-5 inch (13 cm) Type A" (P. 2-18) or "Vehicle information display-7 inch (18 cm) Type B" (P. 2-34).

⚠ CAUTION

Use the headlights with the engine running to avoid discharging the vehicle battery.

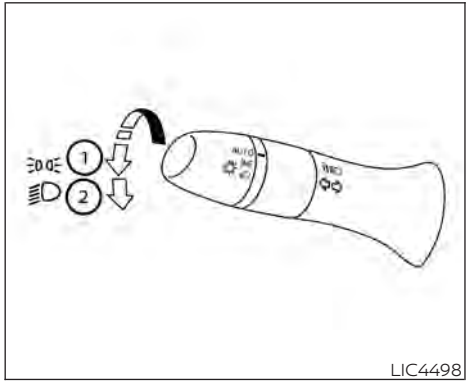

Type D (if so equipped)

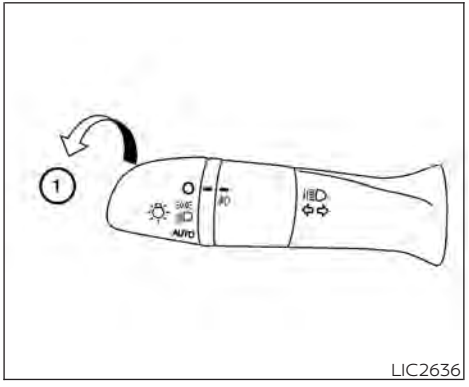

Autolight system

The autolight system allows the headlights to turn on and off automatically. The autolight system can:

- Turn on the headlights, front parking, tail, license plate and instrument panel lights automatically when it is dark.
- Turn off all the lights when it is light.
- Keep all the lights on for a period of time after you place the ignition switch in the OFF position and all doors are closed.

NOTE:

Autolight activation sensitivity and the time delay for autolight shutoff can be adjusted.
For additional information, see "Vehicle information display-5 inch (13 cm) Type A" (P. 2-18) or "Vehicle information display-7 inch (18 cm) Type B" (P. 2-34).

To turn on the autolight system:

1. **For USA:** Turn the headlight switch to the AUTO position ①.

   For CAN: Turn the headlight switch to the AUTO ① or position.
2. Place the ignition switch in the ON position.
3. The autolight system automatically turns the headlights on and off.

Initially, if the ignition switch is placed in the OFF position and a door is opened and left open, the headlights remain on for a period of time. If another door is opened while the headlights are on, then the timer is reset.

To turn the autolight system off:

For USA: Turn the switch to the OFF (if so equipped), , or position.

For CAN: Turn the switch to the position.

The headlights will turn on automatically at twilight or in rainy weather (when the windshield wiper is operated continuously).

If the ignition switch is pushed to the OFF position and one of the doors is opened and this condition is continued, the headlights remain on for 5 minutes.

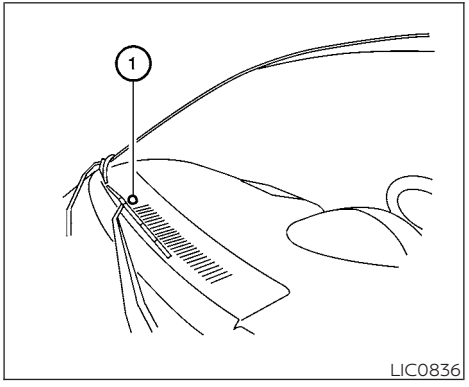

LIC0836

Be sure you do not put anything on top of the autolight sensor located in the top side ① of the instrument panel. The autolight sensor controls the autolight; if it is covered, the autolight sensor reacts as if it is dark out and the headlights will illuminate. If this occurs while parked with the engine off and the ignition switch placed in the ON position, your vehicle's battery could become discharged.

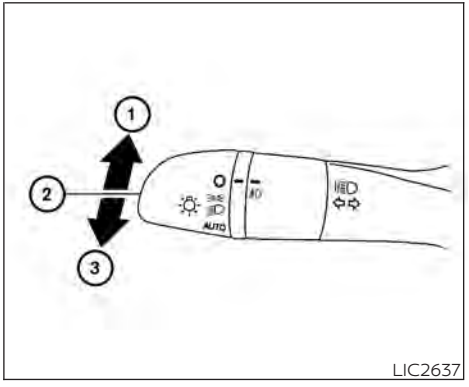

LIC2637

Headlight beam select

① To select the high beam function, put the headlight switch in the position and push the lever forward. The high beam lights come on and the light illuminates in the meter.

② Pull the lever back to select the low beam.

③ Pulling and releasing the lever flashes the headlight high beams on and off.

High Beam Assist

The High Beam Assist system will operate when the vehicle is driven at speeds of approximately 25 mph (40 km/h) and above. If an oncoming vehicle or leading vehicle appears in front of your vehicle when the headlight high beam is on, the headlight will be switched to the low beam automatically.

⚠ WARNING

- **The High Beam Assist system is a convenience but it is not a substitute for safe driving operation. The driver should remain alert at all times, ensure safe driving practices and switch the high beams and low beam manually when necessary.**
- **The high beam or low beam may not switch automatically under the following conditions. Switch the high beam and low beam manually.**
  - **During bad weather (rain, fog, snow, wind, etc.).**
  - **When a light source similar to a headlight or tail light is in the vicinity of the vehicle.**
  - **When the headlights of the oncoming vehicle or the leading vehicle are turned off, when the color of the light is affected due to foreign materials on the lights, or when the light beam is out of position.**
  - **When there is a sudden, continuous change in brightness.**
  - **When driving on a road that passes over rolling hills, or a road that has level differences.**
  - **When driving on a road with many curves.**
  - **When a sign or mirror-like surface is reflecting intense light towards the front of the vehicle.**
  - **When the container, etc. being towed by a leading vehicle is reflecting intense light.**
  - **When a headlight on your vehicle is damaged or dirty.**
  - **When the vehicle is leaning at an angle due to a punctured tire, being towed, etc.**
- **The timing of switching the low beam and high beam may change under the following situations.**
  - **The brightness of the headlights of the oncoming vehicle or leading vehicle.**
  - **The movement and direction of the oncoming vehicle and the leading vehicle.**
  - **When only one light on the oncoming vehicle or the leading vehicle is illuminated.**
  - **When the oncoming vehicle or the leading vehicle is a two-wheeled vehicle.**
  - **Road conditions (incline, curve, the road surface, etc.).**
  - **The number of passengers and the amount of luggage.**

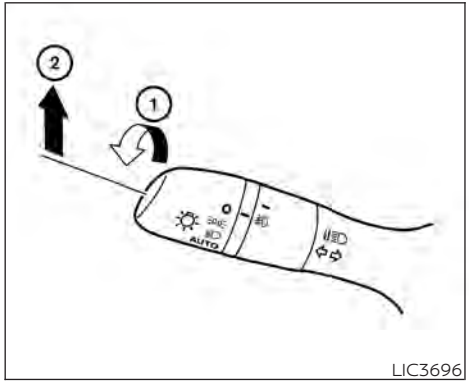

LIC3696

High Beam Assist operation

To activate the High Beam Assist system, turn the headlight switch to the AUTO position ① and push the lever forward ② (high beam position). The High Beam Assist indicator light in the meter will illuminate while the headlights are turned on.

If the High Beam Assist indicator light does not illuminate in the above condition, it may indicate that the system is not functioning properly. Have the system checked, it is recommended that you visit a NISSAN dealer for this service.

When the vehicle speed lowers to less than approximately 16 mph (25 km/h), the headlight uses the low beam.

To turn off the High Beam Assist system, turn the headlight switch to the position or select the low beam position by placing the lever in the N (Neutral) position.

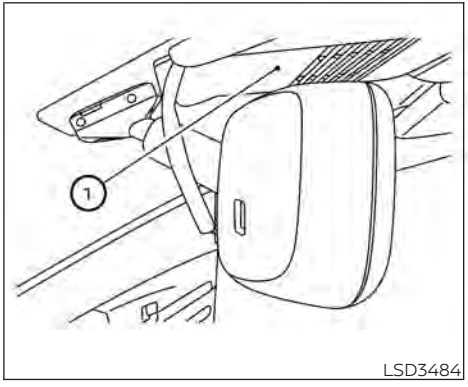

LSD3484

Ambient image sensor maintenance

The ambient image sensor ① for the High Beam Assist system is located in front of the inside mirror. To maintain the proper operation of the high beam assist system and prevent a system malfunction, be sure to observe the following:

- Always keep the windshield clean.
- Do not attach a sticker (including transparent material) or install an accessory near the ambient image sensor.
- Do not strike or damage the areas around the ambient image sensor. Do not touch the sensor lens that is located on the ambient image sensor.

If the ambient image sensor is damaged due to an accident, it is recommended that you visit a NISSAN dealer.

Battery saver system

If the ignition switch is placed in the OFF position while the headlight switch is in the ≡DC≡ or ≡D position, the headlights will turn off after a period of time.

⚠CAUTION

Even though the battery saver feature automatically turns off the headlights after a period of time, you should turn the headlight switch to the OFF position when the engine is not running to avoid discharging the vehicle battery.

LED DAYTIME RUNNING LIGHTS (DRL) SYSTEM (if so equipped)

The LED DRL automatically illuminate at 100% intensity when the engine is started and the parking brake released. The LED Daytime Running Lights (DRL) operate with the headlight switch in any position. When you turn the headlight switch to the ≡D position for full illumination, the LED DRL illuminate at a lower intensity.

If the parking brake is applied before the engine is started, the LED DRL do not illuminate. The LED DRL illuminate when the parking brake is released. The LED DRL will remain on until the ignition switch is placed in the OFF position.

At dusk, the headlights, interior controls and switches will automatically illuminate if the headlight switch is in the AUTO position.

⚠WARNING

When the LED DRL system is active, tail lights on your vehicle are not on. It is necessary at dusk to turn on your headlights. Failure to do so could cause an accident injuring yourself and others.

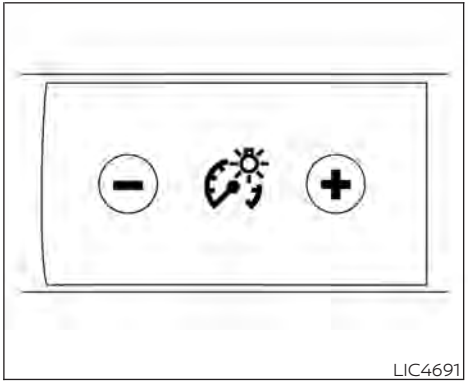

INSTRUMENT BRIGHTNESS CONTROL

Press the "+" button to increase the brightness of instrument panel lights.

Press the "-" button to decrease the brightness of instrument panel lights.

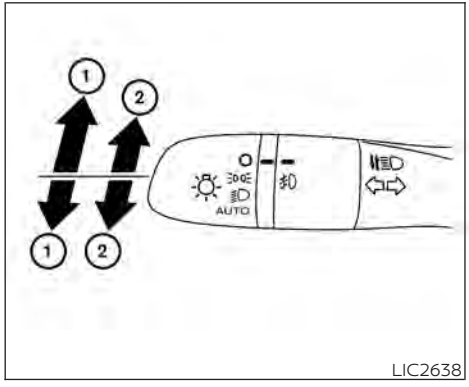

TURN SIGNAL SWITCH

Turn signal

① Move the lever up or down to signal the turning direction. When the turn is completed, the turn signal cancels automatically.

Lane change signal

② Move the lever up or down until the turn signal begins to flash, but the lever does not latch, to signal a lane change. Hold the lever until the lane change is completed.

Move the lever up or down until the turn signal begins to flash, but the lever does not latch, and release the lever. The turn signal will automatically flash three times.

Choose the appropriate method to signal a lane change based on road and traffic conditions.

NOTE:

The 3 flash pass feature may be disabled. For additional information, see "Vehicle information display-5 inch (13 cm) Type A" (P. 2-18) or "Vehicle information display-7 inch (18 cm) Type B" (P. 2-34).

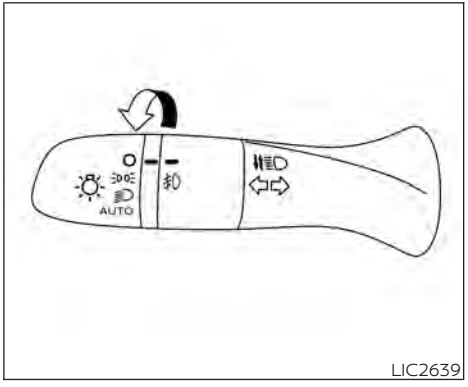

Type A (if so equipped)

FOG LIGHT SWITCH (if so equipped)

To turn the fog lights on, turn the headlight switch to the position, then turn the fog light switch to the position.

To turn the fog lights on with the headlight switch in the AUTO position, the headlights must be on, then turn the fog light switch to the position.

To turn the fog lights off, turn the fog light switch to the OFF position.

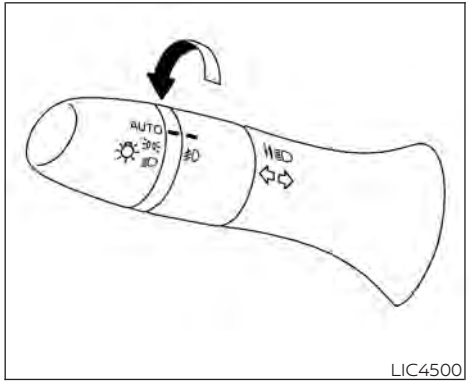

Type B (if so equipped)

The headlights must be on and the low beams selected for the fog lights to operate. The fog lights automatically turn off when the high beam headlights are selected.

HORN

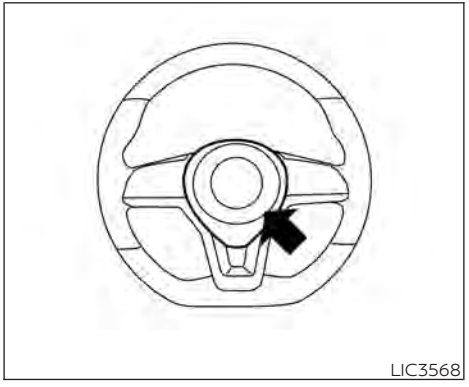

To sound the horn, push near the horn icon on the steering wheel.

⚠WARNING

Do not disassemble the horn. Doing so could affect proper operation of the supplemental front air bag system. Tampering with the supplemental front air bag system may result in serious personal injury.

HEATED SEAT SWITCHES (if so equipped)

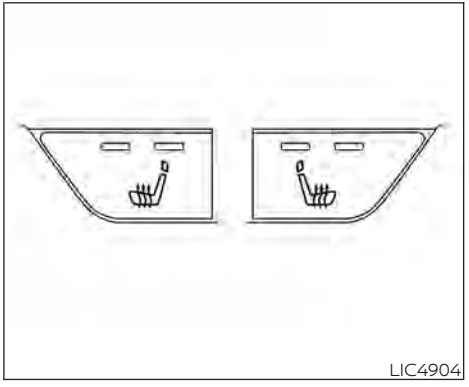

⚠WARNING

Do not use or allow occupants to use the seat heater if you or the occupants cannot monitor elevated seat temperatures or have an inability to feel pain in body parts that contact the seat. Use of the seat heater by such people could result in serious injury.

⚠ CAUTION

- **The battery could run down if the seat heater is operated while the engine is not running.**
- **Do not use the seat heater for extended periods or when no one is using the seat.**
- **Do not put anything on the seat which insulates heat, such as a blanket, cushion, seat cover, etc. Otherwise, the seat may become overheated.**
- **Do not place anything hard or heavy on the seat or pierce it with a pin or similar object. This may result in damage to the heater.**
- **Any liquid spilled on the heated seat should be removed immediately with a dry cloth.**
- **When cleaning the seat, never use gasoline, benzine, thinner, or any similar materials.**
- **If any malfunctions are found or the heated seat does not operate, turn the switch off and have the system checked. It is recommended that you visit a NISSAN dealer for this service.**

The front seats are warmed by built-in heaters.

1. Place the ignition switch in the ON position.
2. Push the switch until either two lights are illuminated for high setting, or one light is illuminated for low setting.

   The heater is controlled by a thermostat, automatically turning the heater on and off. The indicator light will remain on as long as the switch is on.
3. When the seat is warmed or before you leave the vehicle, be sure to push the switch to turn it off.

HEATED STEERING WHEEL SWITCH (if so equipped)

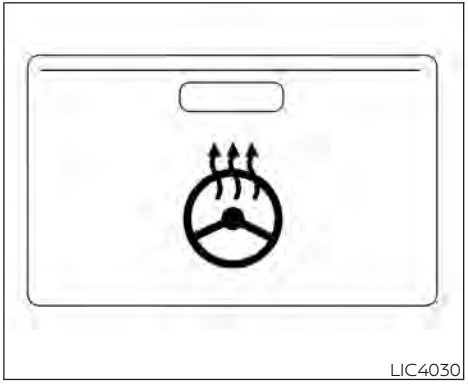

Push the heated steering wheel switch to warm the steering wheel after the ignition switch is placed in the ON position. The indicator light will come on.

If the surface temperature of the steering wheel is below 68°F (20°C), the system will heat the steering wheel and cycle off and on to maintain a temperature above 68°F (20°C). The indicator light will remain on as long as the system is on.

Push the switch again to turn the heated steering wheel system off manually. The indicator light will go off.

NOTE:

- **Once activated, your heated steering wheel will automatically turn on and off to maintain a temperature above 68˚F (20˚C).**
- **When the temperature of the steering wheel is above 122˚F (50˚C) and the heated steering wheel switch is turned on, the system will not heat the steering wheel. This does not indicate a malfunction.**

STEERING ASSIST SWITCH (for vehicles with ProPILOT Assist) (if so equipped)

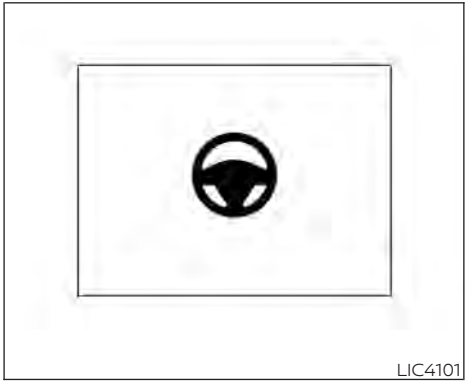

The Steering Assist switch is used to enable and disable the Steering Assist system that is activated using the settings menu of the vehicle information display.

The Steering Assist system controls the steering system, when ProPILOT Assist is engaged, to help keep your vehicle near the center of the lane when driving. For additional information, see "ProPILOT Assist" (P. 5-94) and "Intelligent Lane Intervention (I-LI)" (P. 5-40).

EMERGENCY CALL (SOS) BUTTON (if so equipped)

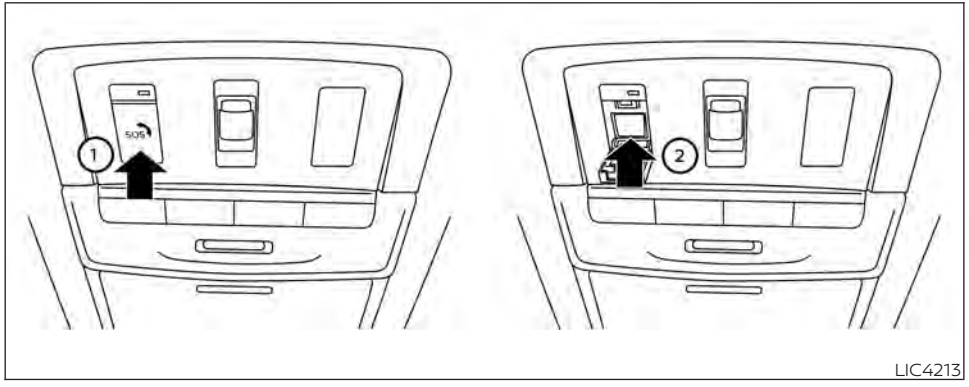

The Emergency call (SOS) button is used in combination with a NissanConnect® Services subscription to call for assistance in case of an emergency.

The Emergency call button is under a cover. Press the cover once ①. The cover will drop down, exposing the Emergency call button.

Pressing the button ② will (with a paid subscription) reach a response specialist that will provide assistance based on the situation described by the vehicle's occupant. For additional information, or to enroll your vehicle, refer to www.NissanUSA.com/connect or call 855-426-6628.

REAR DOOR ALERT

The Rear Door Alert system functions under certain conditions to indicate there may be an object or passenger in the rear seat(s). Check the seat(s) before exiting the vehicle.

The Rear Door Alert system is initially disabled. The driver can enable the system using the vehicle information display. For additional information, see "Vehicle information display warnings and indicators" (P. 2-28 or 2-45).

When the system is enabled:

- The system is activated when a rear door is opened and closed within 10 minutes of the vehicle being driven. When the driver door is closed and the system is activated, a visual message appears in the vehicle information display. For additional information, see "Rear Door Alert is activated (P. 2-29 or 2-45)
- If a rear door is opened and closed but the vehicle is not driven within approximately 10 minutes, the system will not be activated. A rear door must be opened and closed and the car driven within 10 minutes for the system to activate.

When the Rear Door Alert system is activated:

- When the driver puts the vehicle in the P (Park) position, a notification message appears in the vehicle information display with the options to "Dismiss Message" or "Disable Alert" if desired.
  - Select "Disable Alert" to temporarily disable for that stop.
  - No selection or 'Dismiss Message" will keep the alert enabled for that stop.
- If the alert is enabled when a driver exits the vehicle, a message will appear in the vehicle information display that states "Check Back Seat For All Articles."

  If "Horn & Alert" setting is selected:
  - An audible horn sound will occur after a short time unless a rear door is opened and closed within a short time to deactivate the alert.
  - If the doors are locked before the alert is deactivated by opening a rear door, the horn will sound.
  - If the trunk is opened before a rear door is opened, the horn will be delayed until after the trunk is closed.

NOTE:

If "Alert Only" setting is selected, the message alert will still be shown in the vehicle information display but the horn will not sound.

⚠ WARNING

- **If the driver selects "Disable Alert", no audible alert will be provided regardless of rear door open/close status.**
- **There may be times when there is an object or passenger in the rear seat(s) but the audible alert does not sound. For example, this may occur if rear seat passengers enter or exit the vehicle during a trip.**
- **The system does not directly detect objects or passengers in the rear seat(s). Instead, it can detect when a rear door is opened and closed, indicating that there may be something in the rear seat(s).**

NOTE:

There may be times when the horn sounds but there are no objects or passengers in the rear seat(s).

For additional information, see "Rear Door Alert is activated (P. 2-29 or 2-45)

POWER OUTLET

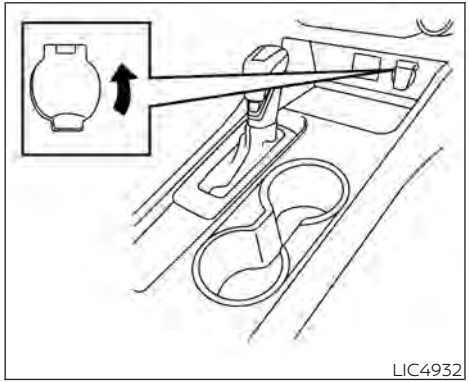

Instrument Panel

The power outlet is for powering electrical accessories such as cellular telephones. It is rated at 12 volt, 120W (10A) maximum.

The power outlet is powered only when the ignition switch is in the AUTO ACC or ON position.

⚠ CAUTION

- **The outlet and plug may be hot during or immediately after use.**
- **Only certain power outlets are designed for use with a cigarette lighter unit. Do not use any other power outlet for an accessory lighter. For additional information, it is recommended that you visit a NISSAN dealer.**
- **Do not use with accessories that exceed a 12 volt, 120W (10A) power draw.**
- **Do not use double adapters or more than one electrical accessory.**
- **Use power outlets with the engine running to avoid discharging the vehicle battery.**
- **Avoid using power outlets when the air conditioner, headlights, or rear window defroster is on.**
- **Before inserting or disconnecting a plug, be sure the electrical accessory being used is turned OFF.**
- **Push the plug in as far as it will go. If good contact is not made, the plug may overheat or the internal temperature fuse may open.**
- **When not in use, be sure to close the cap. Do not allow water or any other liquid to contact the outlet.**

USB/iPod® CHARGING PORT (if so equipped)

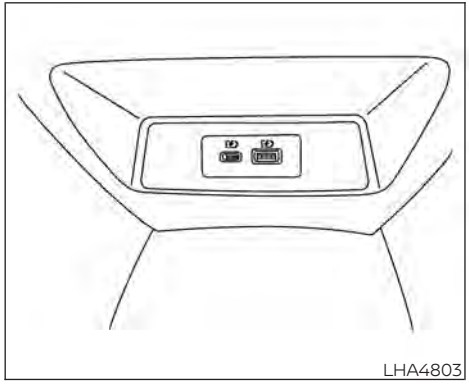

There is a USB/iPod® charging port located on the rear center console. This port will charge compatible devices.

NOTE:

Only the USB connection port located below the instrument panel will allow operation of the USB/iPod® devices through the audio system.

EXTENDED STORAGE SWITCH

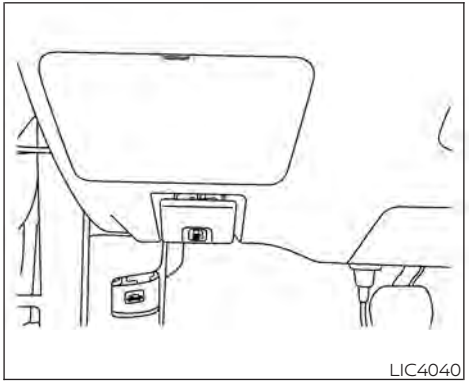

The extended storage switch is used when shipping the vehicle. It is located in the fuse panel to the left of the steering wheel on the instrument panel. If any electrical equipment does not operate, ensure the extended storage switch is pushed fully in place, as shown.

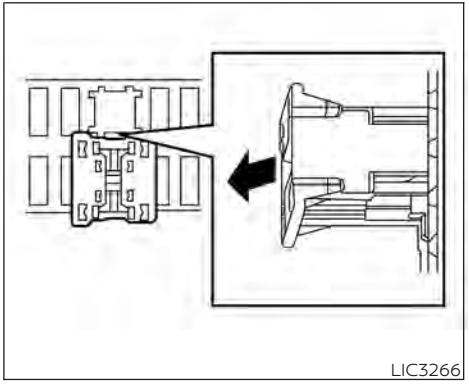

Pulled position

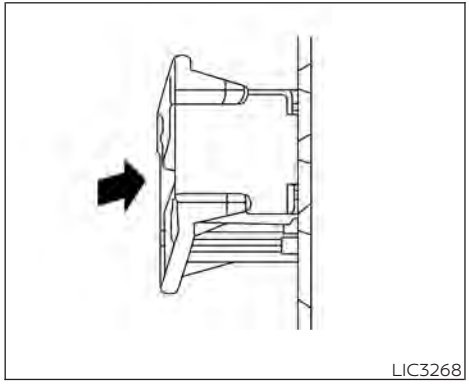

Pushed position

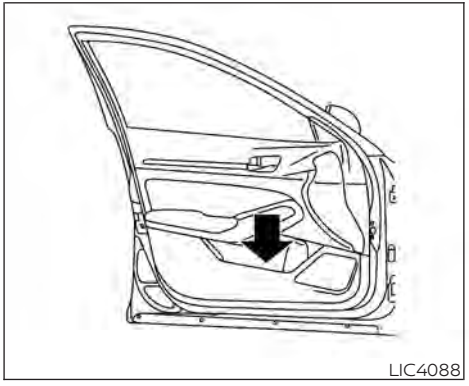

FRONT-DOOR POCKETS

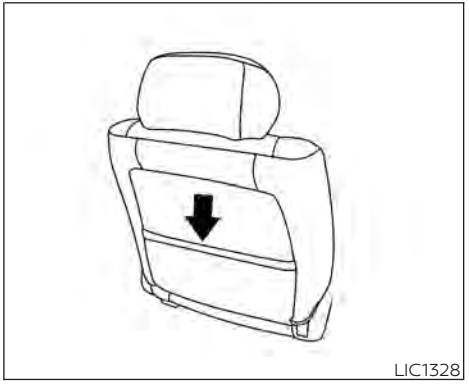

SEATBACK POCKETS (if so equipped)

The seatback pockets may be located on the back of the driver's and/or passenger's seats. The pockets can be used to store maps.

⚠ WARNING

To ensure proper operation of the driver's and/or front passenger's NISSAN Advanced Air Bag System (if so equipped), please observe the following items:

- **Do not allow a passenger in the rear seat to push or pull on the seatback pocket or head restraint/head rest.**
- **Do not place heavy loads heavier than 9.1 lbs. (4 kg) on the seatback, head restraint/head rest or in the seatback pocket.**

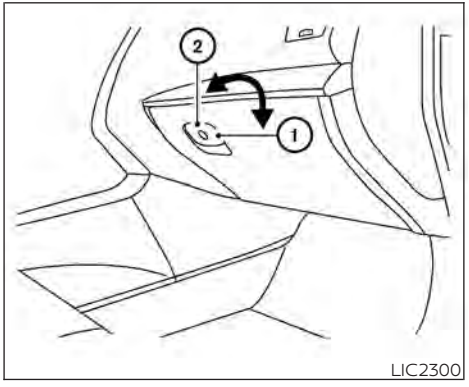

LIC2300

GLOVE BOX

Open the glove box by pulling the handle. Use the master key when locking ① or unlocking ② the glove box (if glove box key cylinder is equipped).

⚠ WARNING

Keep glove box lid closed while driving to help prevent injury in an accident or a sudden stop.

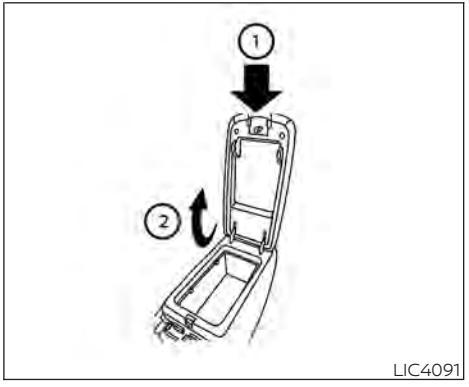

LIC4091

CONSOLE BOX

To open the console box, press in on the lever ① and raise the lid ②.

To close, push the lid down until the lock latches.

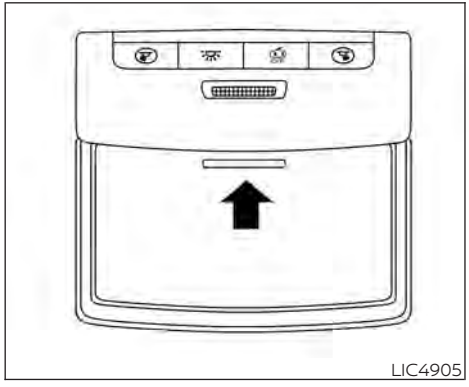

LIC4905

OVERHEAD SUNGLASSES STORAGE

To open the sunglasses holder, push and release.

Only store one pair of sunglasses in the holder.

⚠ WARNING

Keep the sunglasses holder closed while driving to avoid obstructing the driver's view and to help prevent an accident.

⚠ CAUTION

- **Do not use for anything other than sunglasses.**
- **Do not leave sunglasses in the sunglasses holder while parking in direct sunlight. The heat may damage the sunglasses.**

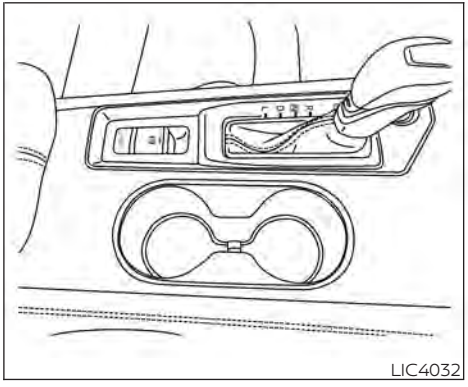

LIC4032

Front

CUP HOLDERS

The rear center cup holders are located in the rear fold-down armrest.

⚠ CAUTION

- **Avoid abrupt starting and braking when the cup holder is being used to prevent spilling the drink. If the liquid is hot, it can scald you or your passenger.**
- **Use only soft cups in the cup holder. Hard objects can injure you in an accident.**

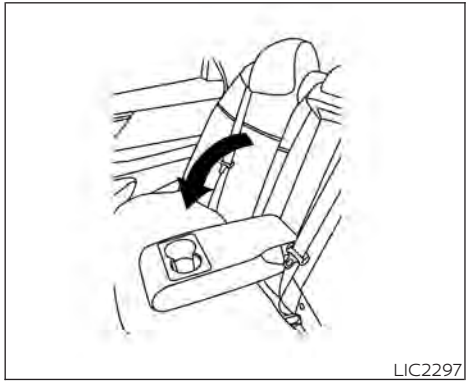

Rear

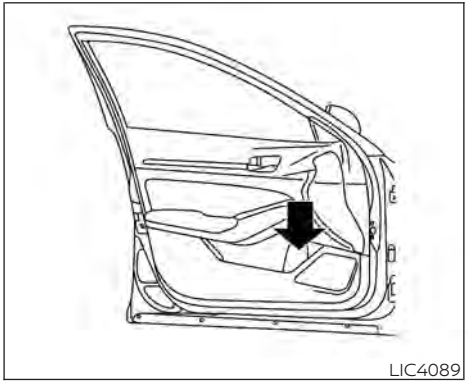

Soft bottle holder (front)

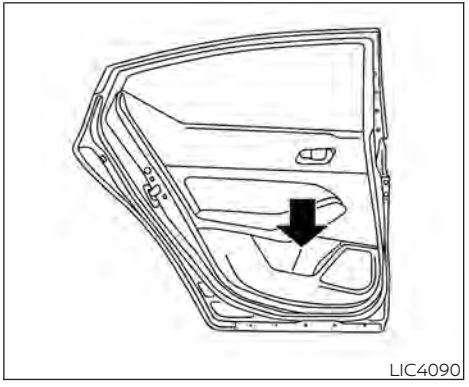

Soft bottle holder (rear)

Soft bottle holder

⚠ CAUTION

- **Do not use bottle holder for any other objects that could be thrown about in the vehicle and possibly injure people during sudden braking or an accident.**
- **Do not use bottle holder for open liquid containers.**

POWER WINDOWS

⚠ WARNING

- **Make sure that all passengers have their hands, etc., inside the vehicle while it is in motion and before closing the windows. Use the window lock switch to prevent unexpected use of the power windows.**
- **To help avoid risk of injury or death through unintended operation of the vehicle and/or its systems, including entrapment in windows or inadvertent door lock activation, do not leave children, people who require the assistance of others or pets unattended in your vehicle. Additionally, the temperature inside a closed vehicle on a warm day can quickly become high enough to cause a significant risk of injury or death to people and pets.**

The power windows operate when the ignition switch is placed in the ON position or for a period of time after the ignition switch is placed in the OFF position. If the driver's or passenger's door is opened during this period of time, the power to the windows is canceled.

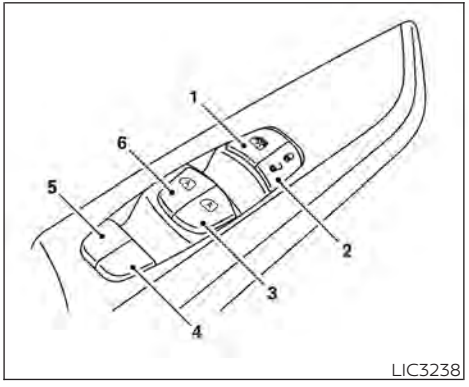

1. Window lock switch
2. Power door lock switch
3. Front passenger side automatic switch (if so equipped)
4. Right rear passenger side switch
5. Left rear passenger side switch
6. Driver's side automatic switch

Driver's side power window switch

The driver's side control panel is equipped with switches to open or close all of the windows.

To open a window, push the switch to the detent and continue to hold down until the desired window position is reached. To close a window, pull the switch to the detent and continue to hold up until the desired window position is reached.

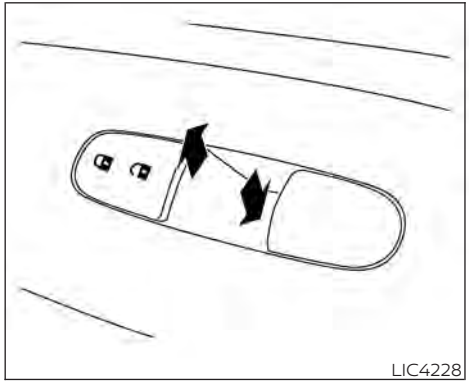

Front passenger's power window switch

The passenger's window switch operates only the corresponding passenger's window. To open the window partially, push the switch down lightly until the desired window position is reached. To close the window, pull the switch up until the desired window position is reached.

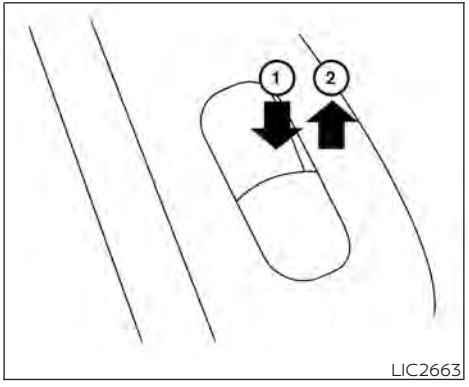

Rear power window switch

The rear power window switches open or close only the corresponding windows. To open the window, push the switch and hold it down ①. To close the window, pull the switch up ②.

Locking passengers' windows

When the window lock switch is depressed, only the driver's side window can be opened or closed. Push it again to cancel the window lock function.

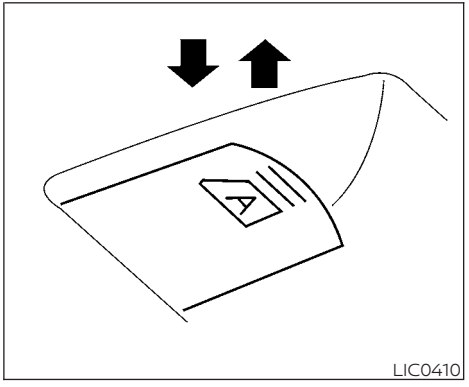

Automatic operation

To fully open a window equipped with automatic operation, push the window switch down to the second detent and release it; it need not be held. The window automatically opens all the way. To stop the window, lift the switch up while the window is opening.

To fully close a window equipped with automatic operation, pull the switch up to the second detent and release it; it need not be held. The window automatically closes all the way. To stop the window, push the switch down while the window is closing.

Auto-reverse function

If the control unit detects something caught in the window as it is closing, the window will be immediately lowered.

The auto-reverse function can be activated when the window is closed by automatic operation when the ignition switch is placed in the ON position or for a period of time after the ignition switch is placed in the OFF position.

Depending on the environment or driving conditions, the auto-reverse function may be activated if an impact or load similar to something being caught in the window occurs.

⚠ WARNING

There are some small distances immediately before the closed position which cannot be detected. Make sure that all passengers have their hands, etc., inside the vehicle before closing the window.

When power window switch does not operate

If the power window automatic function (closing only) does not operate properly, perform the following procedure to initialize the power window system:

1. Place the ignition switch in the ON position.
2. Open the window more than halfway by operating the power window switch.
3. Pull the power window switch and hold it to close the window, and then hold the switch more than 3 seconds after the window is closed.
4. Release the power window switch. Operate the window by the automatic function to confirm the initialization is complete. The power window automatically opens or closes depending on if the automatic down or up function is selected.
5. Perform steps 2 through 4 above for other windows.

If the power window function does not operate properly after performing the above procedure have the system checked and repaired. It is recommended that you visit a NISSAN dealer for this service.

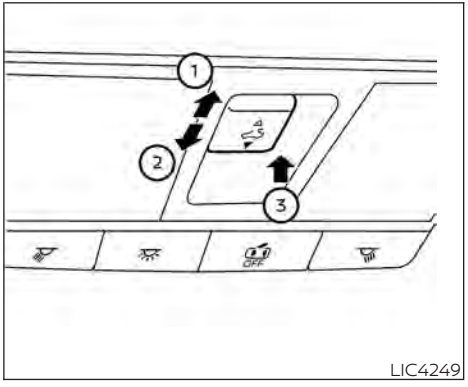

LIC4249

POWER MOONROOF

The moonroof will only operate when the ignition switch is placed in the ON position. The power moonroof is operational for a period of time, even if the ignition switch is placed in the AUTO ACC or OFF position. If the driver's door or the front passenger's door is opened during this period of time, the power to the moonroof is canceled.

Sliding the moonroof

To fully open or close the moonroof, push the switch to the open ① or close ② position and release it; it need not be held. The

roof will automatically open or close all the way. To stop the roof, push the switch once more while it is opening or closing.

Tilting the moonroof

To tilt up, first close the moonroof, then push the switch ③ and release it; it need not be held. To tilt down the moonroof, push the switch to the tilt down position ②.

Resetting the moonroof switch

If the moonroof does not operate properly, perform the following procedure to initialize the moonroof operation system.

1. If the moonroof is open, close it fully by repeatedly pushing the moonroof switch to the closed position ②.
2. Push and hold the switch to the closed position ② for approximately 15 seconds.
3. Release the switch after the moonroof moves up, down, then back to the full tilt up position.
4. Push and hold the switch to the closed position ②.
5. Release the switch after the moonroof completes one full cycle from the tilt up position to the closed position, then to the open position, and again to the fully closed position.
6. Check if the moonroof switch operates normally.

If the moonroof does not operate properly after performing the procedure above, have your vehicle serviced. It is recommended that you visit a NISSAN dealer for this service.

Auto-reverse function (when closing or tilting down the moonroof)

The auto-reverse function can be activated when the moonroof is closed or tilted down by automatic operation when the ignition switch is placed in the ON position or for a period of time after the ignition switch is placed in the OFF position.

Depending on the environment or driving conditions, the auto-reverse function may be activated if an impact or load similar to something being caught in the moonroof occurs.

⚠ WARNING

There are some small distances immediately before the closed position which cannot be detected. Make sure that all passengers have their hands, etc., inside the vehicle before closing the moonroof.

When closing

If the control unit detects something caught in the moonroof as it moves to the front, the moonroof will immediately open backward.

When tilting down

If the control unit detects something caught in the moonroof as it tilts down, the moonroof will immediately tilt up.

If the auto-reverse function malfunctions and repeats opening or tilting up the moonroof, keep pushing the tilt down switch within 5 seconds after it happens; the moonroof will fully close gradually. Make sure nothing is caught in the moonroof.

⚠ WARNING

- **In an accident you could be thrown from the vehicle through an open moonroof. Always use seat belts and child restraints.**
- **Do not allow anyone to stand up or extend any portion of their body out of the moonroof opening while the vehicle is in motion or while the moonroof is closing.**

⚠ CAUTION

- **Remove water drops, snow, ice or sand from the moonroof before opening.**
- **Do not place heavy objects on the moonroof or surrounding area.**

Sunshade

Open and close the sunshade by sliding it forward or backward.

If the moonroof does not close

Have your moonroof checked and repaired. It is recommended that you visit a NISSAN dealer for this service.

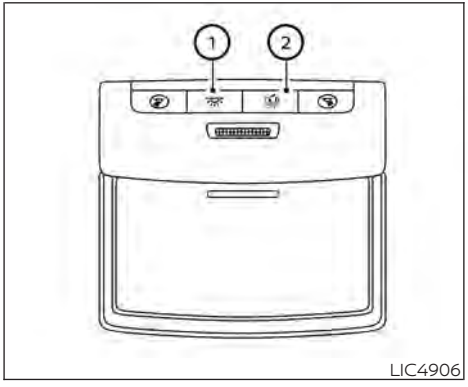

① The interior light can be turned on regardless of door position. The light will go off after a period of time unless the ignition switch is placed in the ON position when any door is opened.

② The interior lights can be set to operate when the doors are opened. To turn off the interior lights when a door is open, push the switch, the interior lights will not illuminate, regardless of door position.

The lights will go off when the ignition switch is placed in the ON position, or the driver's door is closed and locked. The lights will also go off after a period of time when the doors are open.

NOTE:

The step lights (if so equipped) illuminate when the driver and passenger doors are opened regardless of the interior light switch position. These lights will turn off automatically after a period of time while doors are open to prevent the battery from becoming discharged.

⚠ CAUTION

Do not use for extended periods of time with the engine stopped. This could result in a discharged battery.

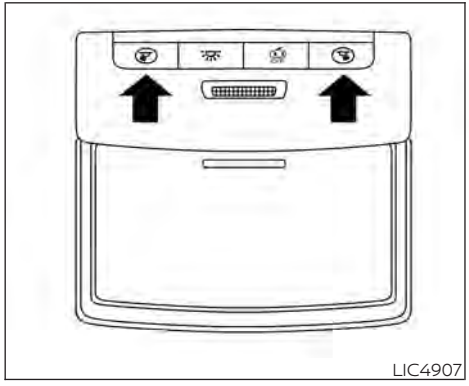

MAP LIGHTS

To turn the map lights on, push the switches. To turn them off, push the switches again.

⚠ CAUTION

Do not use for extended periods of time with the engine stopped. This could result in a discharged battery.

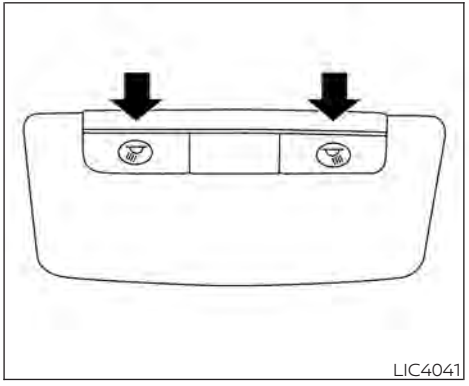

PERSONAL LIGHTS

To turn the rear personal lights on, push the switch. To turn them off, push the switch again.

TRUNK LIGHT

The light illuminates when the trunk lid is opened. When the trunk lid is closed, the light goes off.

The light will go off after a period of time if the trunk lid is left open, unless the ignition switch is placed in the ON position.

For additional information, see "Exterior and interior lights" (P. 8-26).

HOMELINK® UNIVERSAL TRANSCEIVER (if so equipped)

The HomeLink® Universal Transceiver provides a convenient way to consolidate the functions of up to three individual hand-held transmitters into one built-in device.

HomeLink® Universal Transceiver:

- Will operate most radio frequency devices such as garage doors, gates, home and office lighting, entry door locks and security systems.
- Is powered by your vehicle's battery. No separate batteries are required. If the vehicle's battery is discharged or is disconnected, HomeLink® will retain all programming.

When the HomeLink® Universal Transceiver is programmed, retain the original transmitter for future programming procedures (Example: new vehicle purchases). Upon sale of the vehicle, the programmed HomeLink® Universal Transceiver buttons should be erased for security purposes. For additional information, see "Programming HomeLink®" (P. 2-81).

⚠WARNING

- **Your vehicle's engine should be turned off while programming the HomeLink® Universal Transceiver. For additional information, see "Push-button ignition switch" (P. 5-13). Do not breathe exhaust gases; they contain colorless and odorless carbon monoxide. Carbon monoxide is dangerous. It can cause unconsciousness or death.**
- **Do not use the HomeLink® Universal Transceiver with any garage door opener that lacks safety stop and reverse features as required by federal safety standards. (These standards became effective for opener models manufactured after April 1, 1982.) A garage door opener which cannot detect an object in the path of a closing garage door and then automatically stop and reverse does not meet current federal safety standards. Using a garage door opener without these features increases the risk of serious injury or death.**
- **During the programming procedure your garage door or security gate will open and close (if the transmitter is within range). Make sure that people or objects are clear of the garage door, gate, etc., that you are programming.**

PROGRAMMING HOMELINK®

If you have any questions or are having difficulty programming your HomeLink® buttons, refer to the HomeLink® web site at: www.homelink.com or call 1-800-355-3515.

NOTE:

Place the ignition switch in the ON position (without starting the engine) when programming HomeLink®. It is also recommended that a new battery be placed in the hand-held transmitter of the device being programmed to HomeLink® for quicker programming and accurate transmission of the radio frequency.

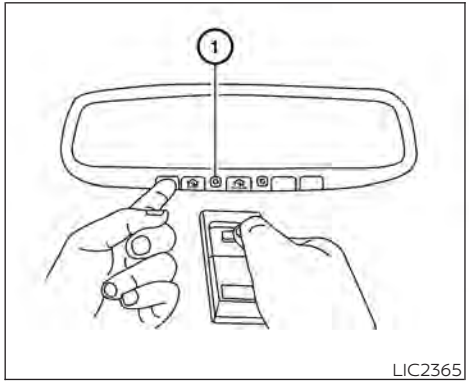

1. Position the end of your hand-held transmitter 1–3 in (2–8 cm) away from the HomeLink® surface, keeping the HomeLink® indicator light ① in view.

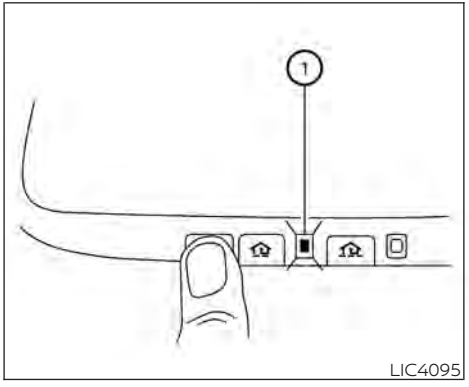

2. Using both hands, simultaneously press and hold the desired HomeLink® button and hand-held transmitter button. DO NOT release until the HomeLink® indicator light ① flashes slowly and then rapidly. When the indicator light flashes rapidly, both buttons may be released. (The rapid flashing indicates successful programming.)

NOTE:

Some devices may require you to replace Step 2 with the cycling procedure noted in "Programming HomeLink® for Canadian customers and gate openers" in this section.

3. Press and hold the programmed HomeLink® button and observe the indicator light.

- If the indicator light ① **is solid/continuous, programming is complete** and your device should activate when the HomeLink® button is pressed and released.
- If the indicator light ① blinks **rapidly for 2 seconds and then turns to a solid/continuous light, continue with Steps 4–6** for a rolling code device. A second person may make the following steps easier. Use a ladder or other device. Do not stand on your vehicle to perform the next steps.

4. At the receiver located on the garage door opener motor in the garage, locate the "learn" or "smart" button (the name and color of the button may vary by manufacturer but it is usually located near where the hanging antenna wire is attached to the unit). If there is difficulty locating the button, reference the garage door opener's manual.
5. Press and release the "learn" or "smart" button.

NOTE:
Once the button is pressed, you have approximately 30 seconds to initiate the next step.

6. Return to the vehicle and firmly press and hold the trained HomeLink® button for 2 seconds and release. Repeat the "press/hold/release" sequence up to three times to complete the training process. HomeLink® should now activate your rolling code equipped device.
7. If you have any questions or are having difficulty programming your HomeLink® buttons, refer to the HomeLink® web site at: www.homelink.com or call 1-800-355-3515.

PROGRAMMING HOMELINK® FOR CANADIAN CUSTOMERS AND GATE OPENERS

Canadian radio-frequency laws require transmitter signals to "time-out" (or quit) after several seconds of transmission – which may not be long enough for HomeLink® to pick up the signal during training. Similar to this Canadian law, some U.S. gate operators are designed to "timeout" in the same manner.

If you live in Canada or you are having difficulties training a gate operator **or** garage door opener by using the "Training" procedures, **replace** "Programming HomeLink®" **step 2** with the following:

NOTE:

When programming a garage door opener, etc., unplug the device during the "cycling" process to prevent possible damage to the garage door opener components.

1. For additional information, see "Programming HomeLink®" step 1, (P. 2-81).
2. Using both hands, simultaneously press and hold the desired HomeLink® button and the hand-held transmitter button. During training, your hand-held transmitter may automatically stop transmitting. Continue to press and hold the desired HomeLink® button while you press and re-press ("cycle") your hand-held transmitter every 2 seconds until the frequency signal has been learned. The HomeLink® indicator light will flash slowly and then rapidly after several seconds upon successful training. DO NOT release until the HomeLink® indicator light flashes slowly and then rapidly. When the indicator light flashes rapidly, both buttons may be released. The rapid flashing indicates successful training.
   Proceed with "Programming HomeLink®" step 3 to complete.
   If the device was unplugged during the programming procedure, remember to plug it back in when programming is completed.

OPERATING THE HOMELINK® UNIVERSAL TRANSCEIVER

The HomeLink® Universal Transceiver, after it is programmed, can be used to activate the programmed device. To operate, simply press and release the appropriate programmed HomeLink® Universal Transceiver button. The amber indicator light will illuminate while the signal is being transmitted.

For convenience, the hand-held transmitter of the device may also be used at any time.

PROGRAMMING TROUBLE-DIAGNOSIS

If the HomeLink® does not quickly learn the hand-held transmitter information:

- Replace the hand-held transmitter batteries with new batteries.
- Position the hand-held transmitter with its battery area facing away from the HomeLink® surface.
- Press and hold both the HomeLink® and hand-held transmitter buttons without interruption.
- Position the hand-held transmitter 1 - 3 inches (26 - 76 mm) away from the HomeLink® surface. Hold the transmitter in that position for up to 15 seconds. If HomeLink® is not programmed within that time, try holding the transmitter in another position – keeping the indicator light in view at all times.

If you have any questions or are having difficulty programming your HomeLink® buttons, refer to the HomeLink® web site at: www.homelink.com or call 1-800-355-3515.

CLEARING THE PROGRAMMED INFORMATION

The following procedure clears the programmed information from both buttons. Individual buttons cannot be cleared. However, individual buttons can be reprogrammed. For additional information, see "Reprogramming a single HomeLink® button" (P. 2-84).

To clear all programming:

1. Press and hold the two outer HomeLink® buttons until the indicator light begins to flash in approximately 10 seconds. Do not hold for longer than 20 seconds.
2. Release both buttons.

HomeLink® is now in the programming mode and can be programmed at any time beginning with "Programming HomeLink®" - Step 1.

REPROGRAMMING A SINGLE HOMELINK® BUTTON

To reprogram a HomeLink® Universal Transceiver button, complete the following:

1. Press and hold the desired HomeLink® button. **DO NOT** release the button.
2. The indicator light will begin to flash after 20 seconds. Without releasing the HomeLink® button, proceed with "Programming HomeLink®" - Step 1 (P. 2-81).

For questions or comments, contact HomeLink® at: www.homelink.com or 1–800–355–3515 (except Mexico).

The HomeLink® Universal Transceiver button has now been reprogrammed. The new device can be activated by pressing the HomeLink® button that was just programmed. This procedure will not affect any other programmed HomeLink® buttons.

IF YOUR VEHICLE IS STOLEN

If your vehicle is stolen, you should change the codes of any non-rolling code device that has been programmed into HomeLink®. Consult the Owner's Manual of each device or call the manufacturer or dealer of those devices for additional information.

When your vehicle is recovered, you will need to reprogram the HomeLink® Universal Transceiver with your new transmitter information.

FCC Notice:

For USA:

This device complies with Part 15 of the FCC Rules. Operation is subject to the following two conditions: (1) This device may not cause harmful interference, and (2) this device must accept any interference received, including interference that may cause undesired operation.

NOTE:

Changes or modifications not expressly approved by the party responsible for compliance could void the user's authority to operate the equipment.

For Canada:

This device contains licence-exempt transmitter(s)/receiver(s) that comply with Innovation, Science and Economic Development Canada's licence-exempt RSS(s). Operation is subject to the following two conditions: (1) This device may not cause interference. (2) This device must accept any interference, including interference that may cause undesired operation of the device.

MEMO

3 Pre-driving checks and adjustments

Keys . . . 3-2
NISSAN Intelligent Key® (if so equipped) . . . 3-2
NISSAN Vehicle Immobilizer System keys . . . 3-4
Doors . . . 3-4
Locking with key . . . 3-5
Locking with inside lock knob . . . 3-6
Locking with power door lock switch . . . 3-6
Automatic door locks . . . 3-6
Child safety rear door lock . . . 3-7
NISSAN Intelligent Key® (if so equipped) . . . 3-7
Operating range . . . 3-9
Door locks/unlocks precaution . . . 3-9
NISSAN Intelligent Key® operation . . . 3-10
How to use the remote keyless entry function . . . 3-14
Warning signals . . . 3-16
Troubleshooting guide . . . 3-16
Remote Engine Start . . . 3-19
Remote Engine Start operating range . . . 3-19
Remote starting the vehicle . . . 3-20
Extending engine run time . . . 3-20
Canceling a Remote Engine Start . . . 3-20
Conditions the Remote Engine Start will not work . . . 3-21
Hood . . . 3-22
Trunk lid . . . 3-22
Opener operation . . . 3-22
Interior trunk lid release . . . 3-24
Interior trunk access . . . 3-24
Fuel-filler door . . . 3-25
Opener operation . . . 3-25
Fuel-filler cap . . . 3-25
Steering wheel . . . 3-27
Tilt operation . . . 3-27
Telescopic operation . . . 3-27
Sun visors . . . 3-28
Vanity mirrors . . . 3-29
Mirrors . . . 3-29
Manual anti-glare rearview mirror (if so equipped) . . . 3-29
Automatic anti-glare rearview mirror (if so equipped) . . . 3-29
Outside mirrors . . . 3-30
Memory seat (if so equipped) . . . 3-31
Memory storage function . . . 3-31
Memory storage function (switch) . . . 3-32
Entry/exit function . . . 3-33
System operation . . . 3-33

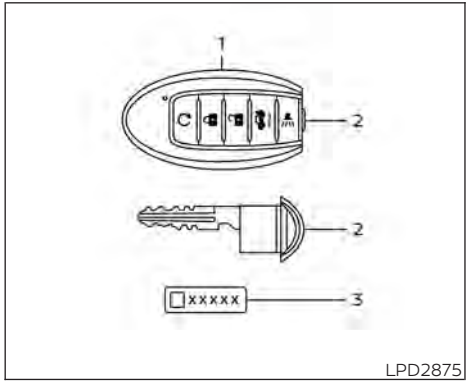

1. Intelligent Keys (two sets)
2. Mechanical key
3. Key number plate (one plate)

NISSAN INTELLIGENT KEY® (if so equipped)

Your vehicle can only be driven with the Intelligent Keys which are registered to your vehicle's Intelligent Key system components and NISSAN Vehicle Immobilizer System components.

Never leave these keys in the vehicle.

As many as four Intelligent Keys can be registered and used with one vehicle. The new keys must be registered prior to use with the Intelligent Key system and NISSAN Vehicle Immobilizer System of your vehicle. It is recommended that you visit a NISSAN dealer for this service. Since the registration process requires erasing all memory in the Intelligent Key components when registering new keys, be sure to take all Intelligent Keys that you have to the NISSAN dealer.

A key number plate is supplied with your keys. Record the key number and keep it in a safe place (such as your wallet), not in the vehicle. If you lose your keys, it is recommended that you visit a NISSAN dealer for duplicates by using the key number. NISSAN does not record key numbers so it is very important to keep track of your key number plate.

A key number is only necessary when you have lost all keys and do not have one to duplicate from. If you still have a key, it can be duplicated without knowing the key number.

⚠ CAUTION

Listed below are conditions or occurrences which will damage the Intelligent Key:

- **Do not allow the Intelligent Key, which contains electrical components, to come into contact with water or salt water. This could affect the system function.**
- **Do not drop the Intelligent Key.**
- **Do not strike the Intelligent Key sharply against another object.**
- **Do not change or modify the Intelligent Key.**
- **Wetting may damage the Intelligent Key. If the Intelligent Key gets wet, immediately wipe until it is completely dry.**
- **Do not place the Intelligent Key for an extended period in an area where temperatures exceed 140°F (60°C).**
- **Do not attach the Intelligent Key with a key holder that contains a magnet.**
- **Do not place the Intelligent Key near equipment that produces a magnetic field, such as a TV, audio equipment and personal computers.**

If an Intelligent Key is lost or stolen, NISSAN recommends erasing the ID code of that Intelligent Key from the vehicle. This may prevent the unauthorized use of the Intelligent Key to operate the vehicle. For information regarding the erasing procedure, it is recommended that you visit a NISSAN dealer.

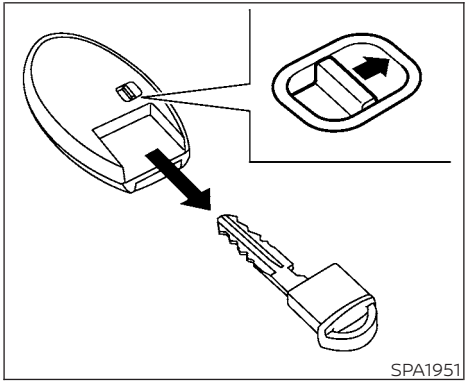

Mechanical key

The Intelligent Key contains the mechanical key.

To remove the mechanical key, release the lock knob on the back of the Intelligent Key.

To install the mechanical key, firmly insert it into the Intelligent Key until the lock knob returns to the lock position.

Use the mechanical key to lock or unlock the doors and glove box (if glove box key cylinder exists).

For additional information, see "Doors" (P. 3-4) and "Storage" (P. 2-71).

⚠ CAUTION

Always carry the mechanical key installed in the Intelligent Key slot.

Valet hand-off (if glove box key cylinder exists)

When you have to leave a key with a valet, give them the Intelligent Key itself and keep the mechanical key with you to protect your belongings.

To prevent the glove box from being opened during valet hand-off, follow the procedures below:

1. Remove the mechanical key from the Intelligent Key.
2. Lock the glove box with the mechanical key.
3. Hand the Intelligent Key to the valet and keep the mechanical key with you.

For additional information, see "Storage" (P. 2-71).

NISSAN VEHICLE IMMOBILIZER SYSTEM KEYS

Additional or replacement keys:

If you still have a key, the key number is not necessary when you need extra NISSAN Vehicle Immobilizer System keys. Your existing key can be duplicated without knowing the key number. As many as four NISSAN Vehicle Immobilizer System keys can be used with one vehicle. You should bring all NISSAN Vehicle Immobilizer System keys that you have to the NISSAN dealer for registration. This is because the registration process will erase the memory of all key codes previously registered into the NISSAN Vehicle Immobilizer System. After the registration process, these components will only recognize keys coded into the NISSAN Vehicle Immobilizer System during registration. Any key that is not given to the dealer at the time of registration will no longer be able to start your vehicle.

⚠ CAUTION

Do not allow the immobilizer system key, which contains an electrical transponder, to come into contact with water or salt water. This could affect system function.

When the doors are locked using one of the following methods, the doors cannot be opened using the inside or outside door handles. The doors must be unlocked to open the doors.

⚠ WARNING

- **Always have the doors locked while driving. Along with the use of seat belts, this provides greater safety in the event of an accident by helping to prevent persons from being thrown from the vehicle. This also helps keep children and others from unintentionally opening the doors, and will help keep out intruders.**
- **Before opening any door, always look for and avoid oncoming traffic.**

- **To help avoid risk of injury or death through unintended operation of the vehicle and/or its systems, including entrapment in windows and/or inadvertent door lock activation, do not leave children, people who require the assistance of others and/or pets unattended in your vehicle. Additionally, the temperature inside a closed vehicle on a warm day can quickly become high enough to cause a significant risk of injury or death to people and pets.**

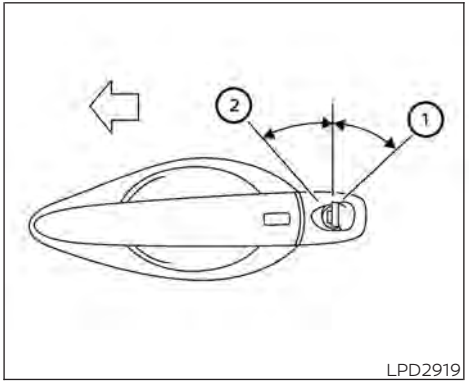

Driver's side

LOCKING WITH KEY

To lock the door using the mechanical key, turn the key toward the rear of the vehicle ①. This will only lock the corresponding door and will not activate the security system. To arm the security system, press the button on the Intelligent Key.

To unlock the corresponding door using the mechanical key, turn the key toward the front of the vehicle ②. This will only unlock the corresponding door and will not disarm the security system.

For additional information, see "Security systems" (P. 2-52).

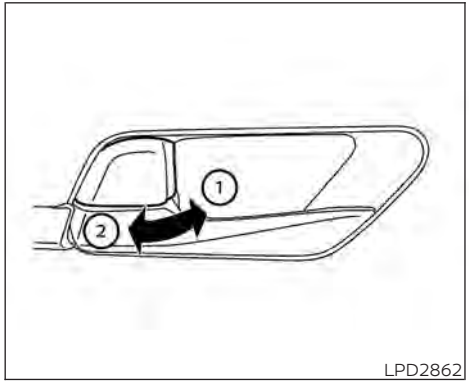

Inside lock

LOCKING WITH INSIDE LOCK KNOB

To lock the door without the key, move the inside lock knob to the lock position ①, then close the door.

To unlock the door without the key, move the inside lock knob to the unlock position ②.

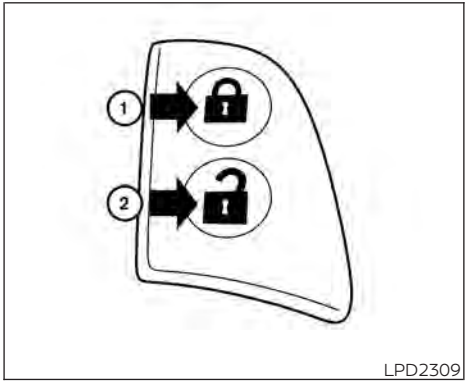

Door lock switch

LOCKING WITH POWER DOOR LOCK SWITCH

To lock all the doors without a key, push the door lock switch (driver's or front passenger's side) to the lock position ①. When locking the door this way, be certain not to leave the key inside the vehicle.

To unlock all the doors without a key, push the door lock switch (driver's or front passenger's side) to the unlock position ②.

Lockout protection

With the Intelligent Key left in the vehicle and any door open, all doors will unlock automatically and a chime will sound after the door is closed.

These functions help to prevent the Intelligent Key from being accidentally locked inside the vehicle.

AUTOMATIC DOOR LOCKS

- All doors lock automatically when the vehicle speed reaches 15 mph (24 km/h)
- All doors unlock automatically when the transmission is placed in the P (Park) position or when the ignition switch is placed in the OFF position, depending on the option selected in the "Vehicle Settings" menu.

NOTE:
The Auto Door Unlock feature can be changed using the "Vehicle Settings" menu on the vehicle information display. For additional information, see "Vehicle information display- 5 inch (13 cm) Type A (if so equipped)" (P. 2-18) or "Vehicle information display —7 inch (18 cm) Type B (if so equipped)" (P. 2-34).

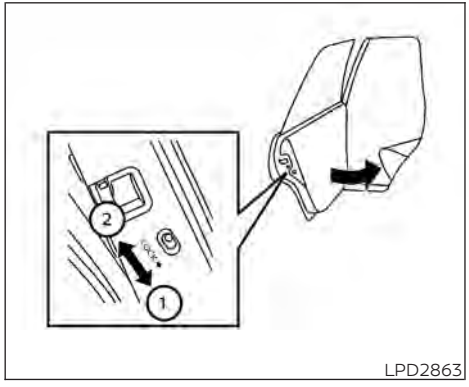

LPD2863

CHILD SAFETY REAR DOOR LOCK

Child safety locks help prevent the rear doors from being opened accidentally, especially when small children are in the vehicle.

The child safety lock levers are located on the edge of the rear doors.

When the lever is in the unlock position ②, the door can be opened from the outside or the inside.

When the lever is in the LOCK position ①, the door can be opened only from the outside.

⚠WARNING

- **Radio waves could adversely affect electric medical equipment. Those who use a pacemaker should contact the electric medical equipment manufacturer for the possible influences before use.**
- **The Intelligent Key transmits radio waves when the buttons are pressed. The FAA advises the radio waves may affect aircraft navigation and communication systems. Do not operate the Intelligent Key while on an airplane. Make sure the buttons are not operated unintentionally when the unit is stored for a flight.**

The Intelligent Key can operate all the door locks using the remote control function or pushing the request switch on the vehicle without taking the key out from a pocket or purse. The operating environment and/or conditions may affect the Intelligent Key operation.

Be sure to read the following before using the Intelligent Key.

⚠CAUTION

- **Be sure to carry the Intelligent Key with you when operating the vehicle.**
- **Never leave the Intelligent Key in the vehicle when you leave the vehicle.**

The Intelligent Key is always communicating with the vehicle as it receives radio waves. The Intelligent Key transmits weak radio waves. Environmental conditions may interfere with the operation of the Intelligent Key under the following operating conditions:

- When operating near a location where strong radio waves are transmitted, such as a TV tower, power station and broadcasting station.
- When in possession of wireless equipment, such as a cellular telephone, transceiver or a CB radio.
- When the Intelligent Key is in contact with or covered by metallic materials.
- When any type of radio wave remote control is used nearby.
- When the Intelligent Key is placed near an electric appliance such as a personal computer.
- When the vehicle is parked near a parking meter.

In such cases, correct the operating conditions before using the Intelligent Key function or use the mechanical key.

Although the life of the battery varies depending on the operating conditions, the battery's life is approximately two years. If the battery is discharged, replace it with a new one.

When the Intelligent Key battery is low, an indicator illuminates in the vehicle information display. For additional information, see "Vehicle information display - 5 inch (13 cm) Type A (if so equipped)" (P. 2-18) or "Vehicle information display - 7 inch (18 cm) Type B (if so equipped)" (P. 2-34).

Since the Intelligent Key is continuously receiving radio waves, if the key is left near equipment which transmits strong radio waves, such as signals from a TV and personal computer, the battery life may become shorter.

For additional information, see "Battery replacement" (P. 8-23).

As many as four Intelligent Keys can be registered and used with one vehicle. For information about the purchase and use of additional Intelligent Keys, it is recommended that you visit a NISSAN dealer.

⚠ CAUTION

Listed below are conditions or occurrences which will damage the Intelligent Key:

- **Do not allow the Intelligent Key, which contains electrical components, to come into contact with water or salt water. This could affect the system function.**
- **Do not drop the Intelligent Key.**
- **Do not strike the Intelligent Key sharply against another object.**
- **Do not change or modify the Intelligent Key.**
- **Wetting may damage the Intelligent Key. If the Intelligent Key gets wet, immediately wipe until it is completely dry.**
- **Do not place the Intelligent Key for an extended period in an area where temperatures exceed 140°F (60°C).**
- **Do not attach the Intelligent Key with a key holder that contains a magnet.**
- **Do not place the Intelligent Key near equipment that produces a magnetic field, such as a TV, audio equipment and personal computers.**

If an Intelligent Key is lost or stolen, NISSAN recommends erasing the ID code of that Intelligent Key from the vehicle. This may prevent the unauthorized use of the Intelligent Key to operate the vehicle. For information regarding the erasing procedure, it is recommended that you visit a NISSAN dealer.

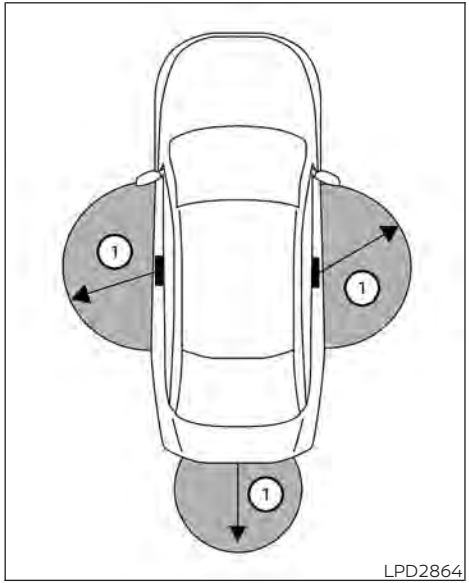

LPD2864

OPERATING RANGE

The Intelligent Key functions can only be used when the Intelligent Key is within the specified operating range from the request switch ①.

When the Intelligent Key battery is discharged or strong radio waves are present near the operating location, the Intelligent Key system's operating range becomes narrower, and the Intelligent Key may not function properly.

The operating range is within 31.50 in (80 cm) from each request switch ①.

If the Intelligent Key is too close to the door glass, handle or rear bumper, the request switches may not function.

When the Intelligent Key is within the operating range, it is possible for anyone, even someone who does not carry the Intelligent Key, to push the request switch to lock/unlock the doors.

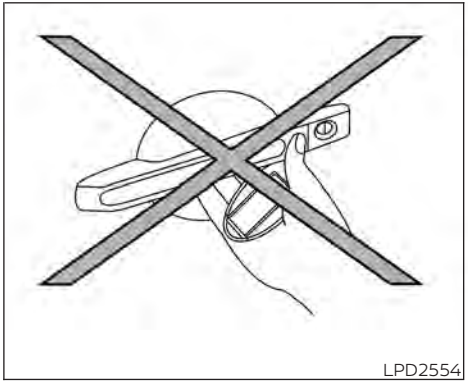
LPD2554

DOOR LOCKS/UNLOCKS PRECAUTION

- Do not push the door handle request switch with the Intelligent Key held in your hand as illustrated. The close distance to the door handle will cause the Intelligent Key system to have difficulty recognizing that the Intelligent Key is outside the vehicle.
- After locking with the door handle request switch, verify the doors are securely locked by testing them.

- To prevent the Intelligent Key from being left inside the vehicle, make sure you carry the Intelligent Key with you and then lock the doors.
- Do not pull the door handle before pushing the door handle request switch. The door will be unlocked but will not open. Release the door handle once and pull it again to open the door.

LPD2865

NISSAN INTELLIGENT KEY® OPERATION

You can lock or unlock the doors without taking the key out of your pocket or bag.

When you carry the Intelligent Key with you, you can lock or unlock all doors by pushing the door handle request switch within the range of operation.

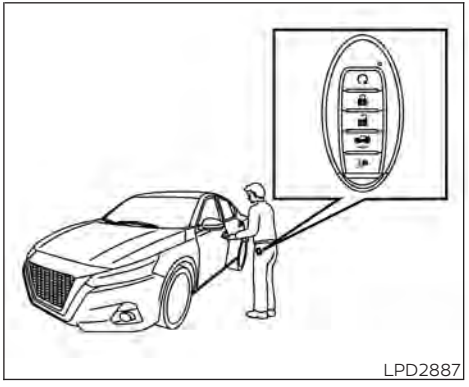

LPD2887

Locking doors

1. Move the shift lever to the P (Park) position, place the ignition switch in the LOCK position and make sure you carry the Intelligent Key with you.
2. Close all doors.
3. Push any door handle request switch ① while carrying the Intelligent Key with you.
4. All doors and the trunk will lock.
5. The hazard warning lights flash twice and the outside chime sounds twice.

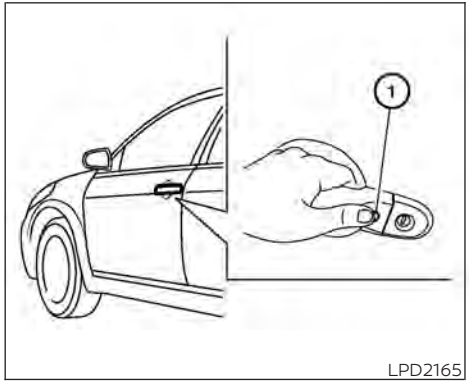

LPD2165

NOTE:

- **Request switches for all doors and trunk can be deactivated when the Ext. Door Switch or I-Key Door Lock feature is switched to OFF using the "Vehicle Settings" menu on the vehicle information, see "Vehicle information display - 5 inch (13 cm) Type A (if so equipped)" (P. 2-18) or "Vehicle information display - 7 inch (18 cm) Type B (if so equipped)" (P. 2-34).**
- **Doors lock with the door handle request switch while the ignition switch is not in the LOCK position.**
- **Doors lock by pushing the driver's side door handle request switch while any door is open. However, the corresponding door locks with the mechanical key even if any door is open.**
- **Doors do not lock with the door handle request switch with the Intelligent Key inside the vehicle and a beep sounds to warn you. However, when an Intelligent Key is inside the vehicle, doors can be locked with another Intelligent Key.**

⚠ WARNING

After locking the doors using the request switch, make sure that the doors have been securely locked by operating the door handles. Failure to follow these instructions may result in inadvertently unlocking the doors, which may decrease the safety and security of your vehicle.

⚠ CAUTION

- **When locking the doors using the request switch, make sure to have the Intelligent Key in your possession before operating the request switch to prevent the Intelligent Key from being left in the vehicle.**
- **The request switch is operational only when the Intelligent Key has been detected by the Intelligent Key system.**

Lockout protection

To prevent the Intelligent Key from being accidentally locked in the vehicle, lockout protection is equipped with the Intelligent Key.

When the driver's side door is open, the doors are locked and then the Intelligent Key is put inside the vehicle and all the doors are closed; the lock will automatically unlock and the door chime sounds.

NOTE:

The doors may not lock when the Intelligent Key is in the same hand that is operating the request switch to lock the door. Put the Intelligent Key in a purse, pocket or your other hand.

⚠ CAUTION

The lockout protection may not function under the following conditions:

- **When the Intelligent Key is placed on top of the instrument panel.**
- **When the Intelligent Key is placed on top of the rear parcel shelf.**
- **When the Intelligent Key is placed inside the glove box or a storage bin.**
- **When the Intelligent Key is placed inside the door pockets.**
- **When the Intelligent Key is placed on or under the spare tire area.**
- **When the Intelligent Key is placed inside or near metallic materials.**

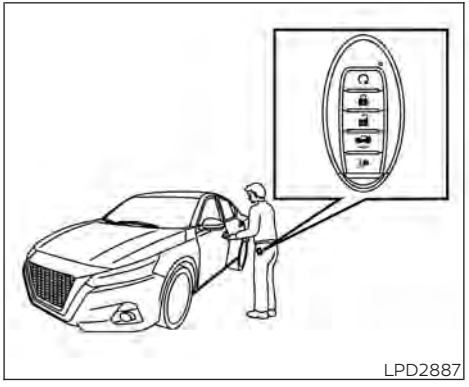

LPD2887

Unlocking doors

1. Carry the Intelligent Key.
2. Push the door handle request switch ①.
3. The hazard warning lights flash once and the outside chime sounds once.
4. Push the door handle request switch ① again within 60 seconds to unlock all doors and trunk. The outside chime sounds again.

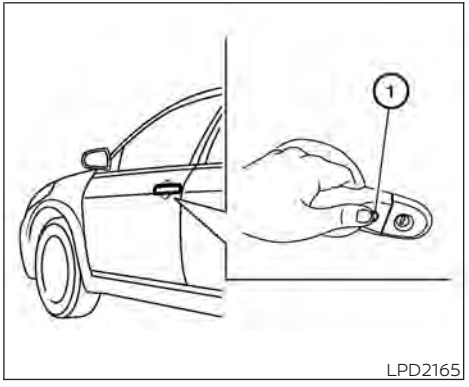

LPD2165

If a door handle is pulled while unlocking the doors, that door may not be unlocked. Returning the door handle to its original position will unlock the door. If the door does not unlock after returning the door handle, push the door handle request switch to unlock the door.

All doors will be locked automatically unless one of the following operations is performed within one minute after pushing the request switch:

- Opening any door.
- Pushing the ignition switch.

Using the interior lights

The interior lights illuminate for a period of time when a door is unlocked.

The lights can be turned off without waiting by performing one of the following operations:

- Placing the ignition switch in the ON position.
- Locking the doors with the Intelligent Key.
- Switching the interior light switch to the OFF position.
- Switching the Auto Room Lamp feature to the OFF position in the "Vehicle Settings" menu on the vehicle information display. For additional information, see "Vehicle information display - 5 inch (13 cm) Type A (if so equipped)" (P. 2-18) or "Vehicle information display - 7 inch (18 cm) Type B (if so equipped)" (P. 2-34).

For additional information, see "Interior lights" (P. 2-79).

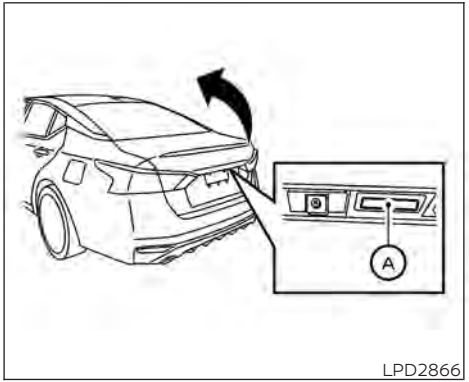

LPD2866

Opening the trunk lid

To open the trunk lid, perform the following:

1. Push the trunk opener switch Ⓐ while carrying the Intelligent Key with you.
2. The trunk will unlatch. A chime will sound four times.
3. Raise the trunk lid to open the trunk.

Lockout protection

To prevent the Intelligent Key from being accidentally locked in the trunk, lockout protection is equipped with the Intelligent Key system.

When all doors are locked and the trunk lid is closed with the Intelligent Key inside the trunk, a chime will sound and the trunk will open.

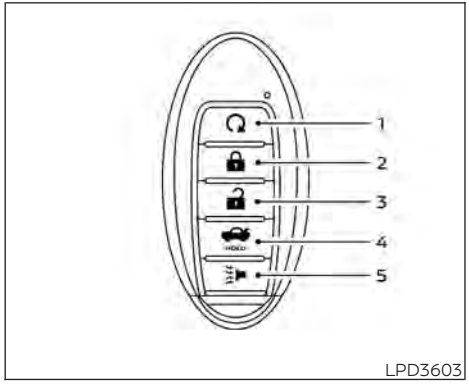

HOW TO USE THE REMOTE KEYLESS ENTRY FUNCTION

1. (remote engine start) button
2. (lock) button
3. (unlock) button
4. HOLD (trunk) button
5. (panic) button

The remote keyless entry function can operate all door locks using the remote keyless function of the Intelligent Key. The remote keyless function can operate at a distance of 33 ft (10 m) away from the vehicle. The operating distance depends upon the conditions around the vehicle.

The remote keyless entry function will not function under the following conditions:

- When the Intelligent Key is not within the operational range.
- When the doors or the trunk are open or not closed securely.
- When the Intelligent Key battery is discharged.

⚠ CAUTION

When locking the doors using the Intelligent Key, be sure not to leave the key in the vehicle.

Locking doors

1. Place the ignition switch in the LOCK position.
2. Close all doors.
3. Press the button on the Intelligent Key.
4. The hazard indicator lights flash twice and the horn beeps once.
5. All doors will be locked.

⚠ WARNING

After locking the doors using the Intelligent Key, be sure that the doors have been securely locked by operating the door handles. Failure to follow these instructions may result in inadvertently unlocking the doors, which may decrease the safety and security of your vehicle.

Unlocking doors

1. Press the button on the Intelligent Key.
2. The hazard indicator lights flash once and the driver's door will unlock.
3. Press the button again within 1 minute to unlock all doors and trunk.

NOTE:

The Selective Unlock feature can be changed using the "Vehicle Settings" menu on the vehicle information display. For additional information, see "Vehicle information display - 5 inch (13 cm) Type A (if so equipped)" (P. 2-18) or "Vehicle information display - 7 inch (18 cm) Type B (if so equipped)" (P. 2-34).

All doors will be locked automatically unless one of the following operations is performed within 1 minute after pressing the button:

- Opening any doors.
- Pushing the ignition switch.

Using the interior lights

The interior lights illuminate for a period of time when a door is unlocked.

The lights can be turned off without waiting by performing one of the following operations:

- Placing the ignition switch in the ON position.
- Locking the doors with the Intelligent Key.
- Switching the interior light switch to the OFF position.
- Switching the Auto Room Lamp feature to the OFF position in the "Vehicle Settings" menu on the vehicle information display. For additional information, see "Vehicle information display - 5 inch (13 cm) Type A (if so equipped)" (P. 2-18) or "Vehicle information display - 7 inch (18 cm) Type B (if so equipped)" (P. 2-34).

For additional information, see "Interior lights" (P. 2-79).

Releasing the trunk lid

Press the HOLD button for longer than 0.5 seconds to open the trunk lid. The trunk release button will not operate when the ignition switch is placed in the ON position.

Using the panic alarm

If you are near your vehicle and feel threatened, you may activate the panic alarm to call attention by pressing and holding the button on the Intelligent Key for **longer than 0.5 seconds.**

The panic alarm and headlights will stay on for a period of time.

The panic alarm stops when:

- It has run for a period of time, or
- Any button is pressed on the Intelligent Key.
- The request switch on the driver or passenger door is pushed and the Intelligent Key is in range of the door handle.

Answer back horn feature

If desired, the answer back horn feature can be deactivated using the Intelligent Key. When it is deactivated and the button is pressed, the hazard indicator lights flash twice. When the button is pressed, neither the hazard indicator lights nor the horn operates.

NOTE:

If you can change the Answer Back Horn feature with the Intelligent Key, the vehicle information display screen will show the current mode after the ignition switch has been cycled from the OFF to the ON position. The vehicle information display screen can also be used to change the answer back horn mode.
For additional information, see "Vehicle information display - 5 inch (13 cm) Type A (if so equipped)" (P. 2-18 or "Vehicle information display - 7 inch (18 cm) Type B (if so equipped)" (P. 2-34).

To deactivate:
Press and hold the 🔒 and 🔓 buttons **for at least 4 seconds.** The hazard indicator lights will flash three times to confirm that the answer back horn feature has been deactivated.

To activate:
Press and hold the 🔒 and 🔓 buttons **for at least 4 seconds once more.** The hazard indicator lights will flash once and the horn will sound once to confirm that the horn beep feature has been reactivated.

Deactivating the horn beep feature does not silence the horn if the alarm is triggered.

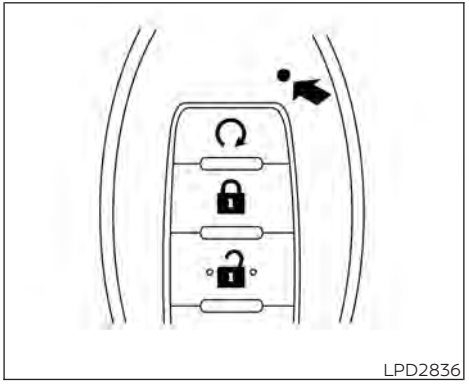

Intelligent Key button operation light

The light blinks only when you press any button on the Intelligent Key. The light illumination only signifies that the key fob has transmitted a signal. You may look and/or listen to verify that the vehicle has performed the intended operation.

If the light does not blink, your battery may be too weak to communicate to the vehicle. If this occurs, the battery may need to be replaced. For additional information regarding the replacement of a battery, see "Battery replacement" (P. 8-23).

WARNING SIGNALS

To help prevent the vehicle from moving unexpectedly by erroneous operation of the Intelligent Key or to help prevent the vehicle from being stolen, a chime or buzzer sounds from inside and outside the vehicle and a warning is displayed in the instrument panel.

When a chime or beep sounds or a warning is displayed, be sure to check the vehicle and the Intelligent Key.

For additional information, see "Troubleshooting guide" (P. 3-16) and "Vehicle information display - 5 inch (13 cm) Type A (if so equipped)" (P. 2-18) or "Vehicle information display - 7 inch (18 cm) Type B (if so equipped)" (P. 2-34).

TROUBLESHOOTING GUIDE

Verify the location of all Intelligent Keys that are programmed for the vehicle. If another Intelligent Key is in range or inside the vehicle, the vehicle system may respond differently than expected.

Symptom		Possible Cause	Remedy
When stopping the engine	The "Shift to Park" warning appears in the display and the inside warning chime sounds continuously.	The shift lever is not in the P (Park) position.	Move the shift lever to the P (Park) position.
When opening the driver's door to get out of the vehicle	The "Door/Trunk Open" warning appears in the display.	The ignition switch is in the ACC position.	Place the ignition switch in the OFF position.
When closing the door after getting out of the vehicle	The "No Key Detected" warning appears in the display, the outside chime sounds three times and the inside warning chime sounds for approximately 3 seconds.	The ignition switch is in the ACC or ON position.	Place the ignition switch in the OFF position.
	The "Shift to Park" warning appears in the display.	The ignition switch is in the ACC position and the shift lever is not in the P (Park) position.	Move the shift lever to the P (Park) position and place the ignition switch in the OFF position.
	The Rear Door Alert warning message appears on the display, the horn sounds three times twice, or a Check Rear Seat for All Articles warning appears on the display.	The Rear Door Alert is activated.	Check the back seat for all articles, press the OK button to clear the Rear Door Alert warning message.
When closing the door with the inside lock knob turned to LOCK	The outside chime sounds for approximately 3 seconds and all the doors unlock.	The Intelligent Key is inside the vehicle.	Carry the Intelligent Key with you.
When pushing the door handle request switch or the 🔒 button on the Intelligent Key to lock the door	The outside chime sounds for approximately 2 seconds.	The Intelligent Key is inside the vehicle.	Carry the Intelligent Key with you.

Symptom		Possible Cause	Remedy
When pushing the ignition switch to start the engine	The "Key Battery Low" indicator appears in the display.	The battery charge is low.	Replace the battery with a new one. For additional information, see "Battery replacement" (P. 8-23).
	The "Key ID Incorrect" warning appears in the display, the outside chime sounds three times and the inside warning chime sounds for approximately 3 seconds.	The Intelligent Key is not in the vehicle.	Carry the Intelligent Key with you.
When pressing the ignition switch	The "Key System Error: See Owner's Manual" warning appears on the display.	It warns of a malfunction with the Intelligent Key system.	It is recommended that you visit a NISSAN dealer.

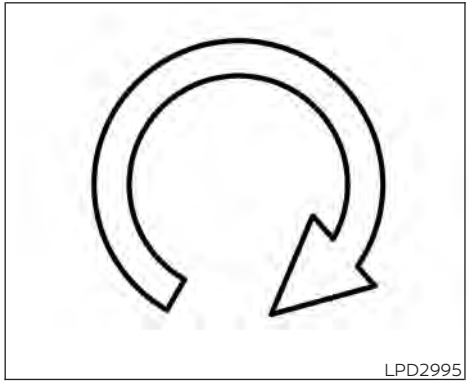

The button will be on the NISSAN Intelligent Key® if the vehicle has Remote Engine Start. This feature allows the engine to start from outside the vehicle.

The following features may be affected when Remote Engine Start is used:

- Vehicles with a manual climate control system (if so equipped)will default to the last used heating or cooling mode.
- Vehicles with an automatic climate control system (if so equipped) will default to either a heating or cooling mode depending on outside and cabin temperatures. For additional information, see "Remote Engine Start with Intelligent Climate Control" (P. 4-41).

Laws in some local communities may restrict or prohibit the use of Remote Engine Start, or the amount of time a parked vehicle engine may idle. For example, some laws require a person using Remote Engine Start to have the vehicle in view or may restrict idling time except in freezing temperatures. Check local regulations for any requirements.

Other conditions may affect the function of the Remote Engine Start feature. For additional information, see "Conditions the Remote Engine Start will not work" (P. 3-21).

Other conditions can affect the performance of the Intelligent Key transmitter. For additional information, see "NISSAN Intelligent Key®" (P. 3-2).

REMOTE ENGINE START OPERATING RANGE

⚠WARNING

- **To help avoid risk of injury or death through unintended operation of the vehicle and/or its systems, including entrapment in windows or inadvertent door lock activation, do not leave children, people who require the assistance of others or pets unattended in your vehicle. Additionally, the temperature inside a closed vehicle on a warm day can quickly become high enough to cause a significant risk of injury or death to people and pets.**
- **Do not use Remote Engine Start in closed spaces such as a garage. Do not breathe exhaust gases; they contain colorless and odorless carbon monoxide. Carbon monoxide is dangerous. It can cause unconsciousness or death.**

⚠ CAUTION

When the Intelligent Key battery is discharged or other strong radio wave sources are present near the operating location, the Intelligent Key operating range becomes narrower, and the Intelligent Key may not function properly.

The Remote Engine Start function can only be used when the Intelligent Key is within the specified operating range from the vehicle.

The Remote Engine Start operating range is approximately 197 ft (60 m) from the vehicle.

REMOTE STARTING THE VEHICLE

To use the Remote Engine Start feature to start the engine perform the following:

1. Aim the Intelligent Key at the vehicle.
2. Press the button to lock all doors.
3. Within 5 seconds press and hold the button until the turn signal lights flash and the tail lamps turn on. If the vehicle is not within view press and hold the button for at least 2 seconds.

The following events will occur when the engine starts:

- The parking lights will turn on and remain on as long as the engine is running.
- The doors will be locked and the climate control system may come on.
- The engine will continue to run for 10 minutes. Repeat the steps to extend the time for an additional 10 minutes. For additional information, see "Extending engine run time" (P. 3-20).

Depress and hold the brake then push the push-button ignition switch to the ON position before driving. For additional information, see "Driving the vehicle" (P. 5-18).

EXTENDING ENGINE RUN TIME

The Remote Engine Start feature can be extended one time by performing the steps listed in "Remote starting the vehicle" in this section. Run time will be calculated as follows:

- The first 10 minute run time will start when the Remote Engine Start function is performed.
- The second 10 minutes will start immediately when the Remote Engine Start function is performed again. For example, if the engine has been running for 5 minutes, and 10 minutes are added, the engine will run for a total of 15 minutes.
- Extending engine run time will count towards the two Remote Engine Start limit.

A maximum of two Remote Engine Starts, or a single Remote Engine Start with an extension, are allowed between ignition cycles. The ignition switch must be cycled to the ON position and then back to the OFF position before the Remote Engine Start procedure can be used again.

CANCELING A REMOTE ENGINE START

To cancel a Remote Engine Start, perform one of the following:

- Aim the Intelligent Key at the vehicle and press until the parking lights turn off.
- Turn on the hazard warning flashers.
- Cycle the ignition switch ON and then OFF.
- The extended engine run time has expired.
- The first 10 minute timer has expired.
- The engine hood has been opened.

- The shift lever is moved out of park.
- The alarm sounds due to illegal entry into the vehicle.
- The ignition switch is pushed without an Intelligent Key in the vehicle.
- The ignition switch is pushed with an Intelligent Key in the vehicle but the brake pedal is not depressed.

CONDITIONS THE REMOTE ENGINE START WILL NOT WORK

The Remote Engine Start will not operate if any of the following conditions are present:

- The ignition switch is placed in the ON position.
- The hood is not securely closed.
- The hazard indicator lights are on.
- The engine is still running. The engine must be completely stopped. Wait at least 6 seconds if the engine goes from running to off. This is not applicable when extending engine run time.
- The button is not pressed and held for at least 2 seconds.
- The button is not pressed and held within 5 seconds of pressing the lock button.
- The brake is pressed.
- The doors are not closed and locked.
- The trunk is open.
- The Key System Error remains solid in the vehicle information display.
- The alarm sounds due to illegal entry into the vehicle.
- Two Remote Engine Starts, or a single Remote Engine Start with an extension, have already been used.
- The vehicle is not in P (Park).
- There is a detected registered key already inside of the vehicle.
- The Remote Engine Start feature has been switched to the OFF using the "Vehicle Settings" menu on the vehicle information display. For additional information, see "Vehicle information display - 5 inch (13 cm) Type A (if so equipped)" (P. 2-18) or "Vehicle information display - 7 inch (18 cm) Type B (if so equipped)" (P. 2-34).

The Remote Engine Start may display a warning or indicator in the vehicle information display. For additional information, see "Vehicle information display - 5 inch (13 cm) Type A (if so equipped)" (P. 2-18) or "Vehicle information display - 7 inch (18 cm) Type B (if so equipped)" (P. 2-34).

HOOD

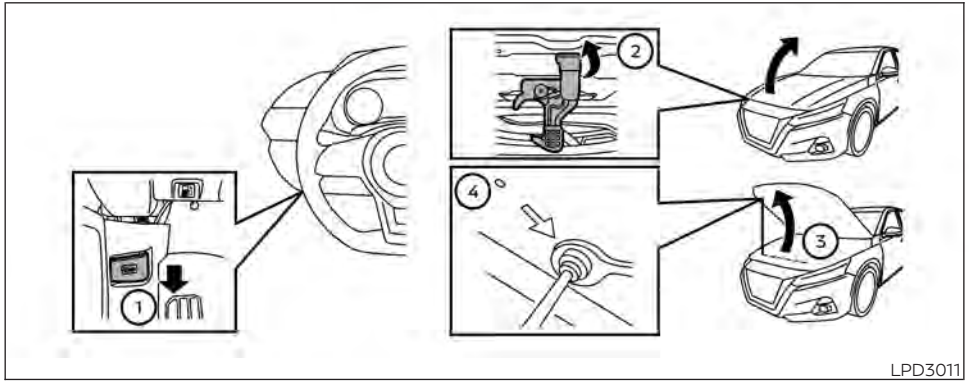

LPD3011

1. Pull the hood lock release handle ① located below the driver's side instrument panel; the hood springs up slightly.
2. To open the hood, push the lever ② underneath the front of the hood upwards with your fingertips as illustrated and raise the hood.
3. Remove the support rod from the clamp ③.
4. Insert the support rod ④ into the slot on the passenger side of the hood.
5. When closing the hood, return the support rod to its original position, lower the hood to approximately 12 in (30 cm) above the latch and release it. This allows proper engagement of the hood latch.

⚠WARNING

- **Make sure the hood is completely closed and latched before driving. The vehicle should only ever be operated with the hood securely closed.**
- **If you see steam or smoke coming from the engine compartment, to avoid injury do not open the hood.**

TRUNK LID

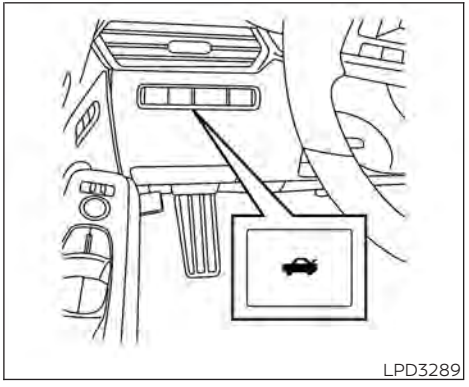
LPD3289

Instrument panel

OPENER OPERATION

⚠WARNING

- **Do not drive with the trunk lid open. This could allow dangerous exhaust gases to be drawn into the vehicle. For additional information, see "Exhaust gas (carbon monoxide)" (P. 5-4).**

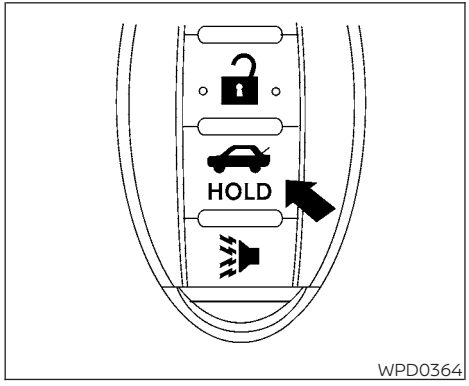

Intelligent Key

- **Closely supervise children when they are around cars to prevent them from playing and becoming locked in the trunk where they could be seriously injured. Keep the car locked, with the rear seatback and trunk lid securely latched when not in use, and prevent children's access to car keys.**

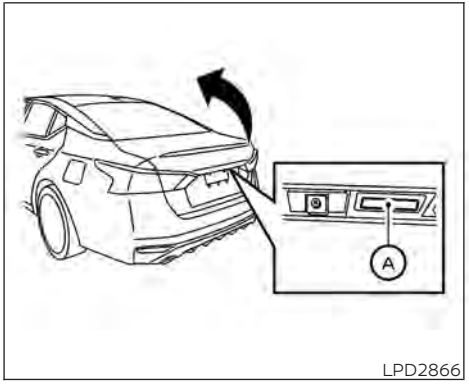

Trunk opener switch

To open the trunk lid perform one of the following after unlocking all doors:

- Press the button on the instrument panel.
- Press the button on the Intelligent Key.
- Push the trunk opener switch Ⓐ.

To close the trunk lid, lower and push the trunk lid down securely.

NOTE:

Request switches for all doors and trunk can be deactivated when the Ext Door Switch or I-Key Door Lock feature is switched to OFF in the "Vehicle Settings" of the vehicle information display. For additional information, see "Vehicle information display - 5 inch (13 cm) Type A (if so equipped)" (P. 2-18) or "Vehicle information display - 7 inch (18 cm) Type B (if so equipped)" (P. 2-34).

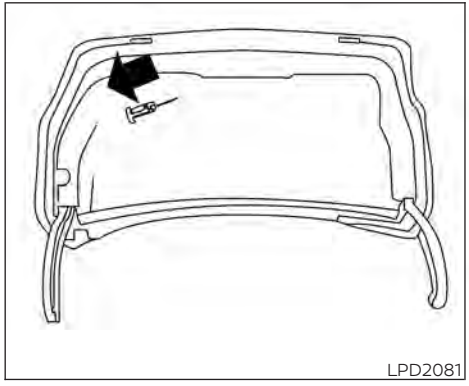

INTERIOR TRUNK LID RELEASE

⚠ WARNING

Closely supervise children when they are around cars to prevent them from playing and becoming locked in the trunk where they could be seriously injured. Keep the car locked, with the rear seatback and trunk lid securely latched when not in use, and prevent children's access to car keys.

The interior trunk lid release mechanism provides a means of escape for children and adults in the event they become locked inside the trunk.

To open the trunk from the inside, pull the illuminated release handle until the lock releases and push up on the trunk lid. The release handle is made of a material that glows in the dark after a brief exposure to ambient light.

The handle is located inside the trunk compartment on the interior of the trunk lid.

INTERIOR TRUNK ACCESS

The trunk can be accessed from the passenger side of the rear seat.

1. Move the front passenger seat to the most forward position.
2. Open the access cover on the rear parcel shelf.
3. Slide the handle in the direction of the arrow.
4. Fold down the passenger's side seatback.

For additional information, see "Folding rear seat" (P. 1-6).

⚠ WARNING

- **Never allow anyone to ride in the cargo area or on the rear seat when it is in the fold-down position. Use of these areas by passengers without proper restraints could result in serious injury or death in an accident or sudden stop.**
- **Properly secure all cargo with ropes or straps to help prevent it from sliding or shifting. Do not place cargo higher than the seatbacks. In a sudden stop or collision, unsecured cargo could cause personal injury.**
- **When returning the seatbacks to the upright position, be certain they are completely secured in the latched position. If they are not completely secured, passengers may be injured in an accident or sudden stop.**
- **Closely supervise children when they are around cars to prevent them from playing and becoming locked in the trunk where they could be seriously injured. Keep the car locked, with the rear seatback and trunk lid securely latched when not in use, and prevent children's access to car keys.**

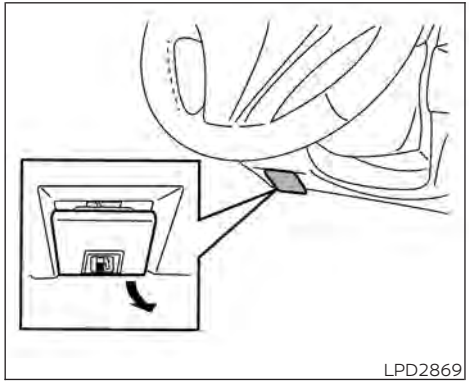

OPENER OPERATION

The fuel-filler door release is located below the instrument panel. To open the fuel-filler door, pull the release. To lock, close the fuel-filler door securely.

FUEL-FILLER CAP

⚠ WARNING

- **Gasoline is extremely flammable and highly explosive under certain conditions. You could be burned or seriously injured if it is misused or mishandled. Always stop the engine and do not smoke or allow open flames or sparks near the vehicle when refueling.**
- **Do not attempt to top off the fuel tank after the fuel pump nozzle shuts off automatically. Continued refueling may cause fuel overflow, resulting in fuel spray and possibly a fire.**
- **Use only an original equipment type fuel-filler cap as a replacement. It has a built-in safety valve needed for proper operation of the fuel system and emission control system. An incorrect cap can result in a serious malfunction and possible injury. It could also cause the Malfunction Indicator Light (MIL) to come on.**
- **Never pour fuel into the throttle body to attempt to start your vehicle.**
- **Do not fill a portable fuel container in the vehicle or trailer. Static electricity can cause an explosion of flammable liquid, vapor or gas in any vehicle or trailer. To reduce the risk of serious injury or death when filling portable fuel containers:**
  - **Always place the container on the ground when filling.**
  - **Do not use electronic devices when filling.**
  - **Keep the pump nozzle in contact with the container while you are filling it.**
  - **Use only approved portable fuel containers for flammable liquid.**

⚠ CAUTION

- **Do not use a fuel that contains more than 15% ethanol in your vehicle. For additional information, see "Fuel recommendation" (P. 10-4).**

- **The Loose Fuel Cap warning message will be displayed/warning will appear if the fuel-filler cap is not properly tightened. It may take a few driving trips for the message to be displayed. Failure to tighten the fuel-filler cap properly after the Loose Fuel Cap warning message is displayed/warning appears may cause the Malfunction Indicator Light (MIL) to illuminate.**
- **Failure to tighten the fuel-filler cap properly may cause the Malfunction Indicator Light (MIL) to illuminate. If the light illuminates because the fuel-filler cap is loose or missing, tighten or install the cap and continue to drive the vehicle. The light should turn off after a few driving trips. If the light does not turn off after a few driving trips, have the vehicle inspected. It is recommended that you visit a NISSAN dealer for this service.**
- **For additional information, see "Malfunction Indicator Light (MIL)" (P. 2-15).**
- **If fuel is spilled on the vehicle body, flush it away with water to avoid paint damage.**

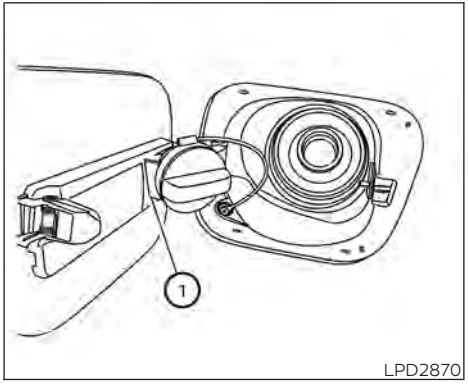

LPD2870

To remove the fuel-filler cap:

1. Turn the fuel-filler cap counterclockwise to remove.
2. Put the fuel-filler cap on the cap holder ① while refueling.

To install the fuel-filler cap:

1. Insert the fuel-filler cap straight into the fuel-filler tube.
2. Turn the fuel-filler cap clockwise until a single click is heard.

LPD3029

Loose Fuel Cap warning

The Loose Fuel Cap warning message will be displayed in the vehicle information display when the fuel-filler cap is not tightened correctly after the vehicle has been refueled. It may take a few driving trips for the message to be displayed. To turn off the warning, perform the following:

1. Remove and install the fuel-filler cap as soon as possible. For additional information, see "Fuel-filler cap" (P. 3-25)
2. Tighten the fuel-filler cap until it clicks.

3. Press the OK button on the steering wheel for about 1 second to turn off the Loose Fuel Cap warning after tightening the fuel-filler cap.

⚠WARNING

- **Do not adjust the steering wheel while driving. You could lose control of your vehicle and cause an accident.**
- **Do not adjust the steering wheel any closer to you than is necessary for proper steering operation and comfort. The driver's air bag inflates with great force. If you are unrestrained, leaning forward, sitting sideways or out of position in any way, you are at greater risk of injury or death in a crash. You may also receive serious or fatal injuries from the air bag if you are up against it when it inflates. Always sit back against the seatback and as far away as practical from the steering wheel. Always use the seat belts.**

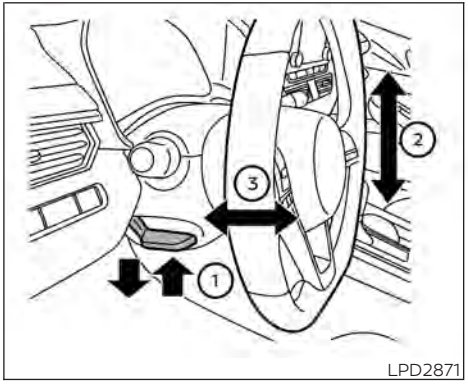

LPD2871

TILT OPERATION

Pull the lock lever down and hold on until the end of the stroke ① and adjust the steering wheel up or down ② to the desired position.

Push the lock lever up ① firmly and hold on until end of stroke to lock the steering wheel in place.

TELESCOPIC OPERATION

Pull the lock lever down ① and adjust the steering wheel forward or backward ③ to the desired position.

Push the lock lever up ① firmly and hold on until end of stroke to lock the steering wheel in place.

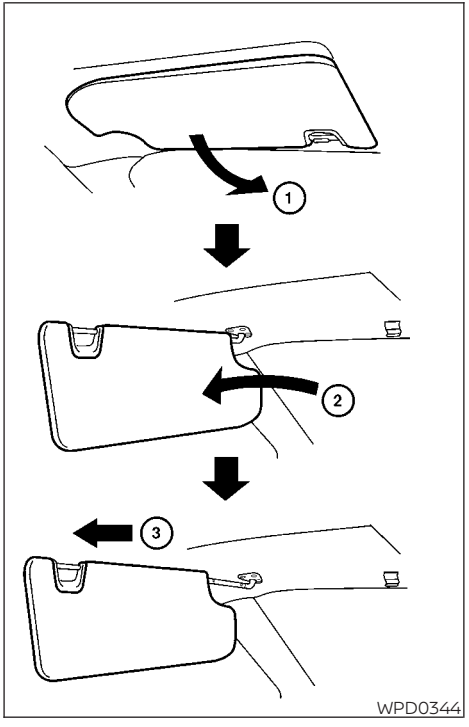

1. To block glare from the front, swing down the main sun visor ①.
2. To block glare from the side, remove the main sun visor ② from the center mount and swing the visor to the side.
3. To extend the sun visor, slide in or out as needed ③.

⚠ CAUTION

- **Do not store the sun visor before returning the extension to its original position.**
- **Do not pull the extension sun visor forcedly downward.**

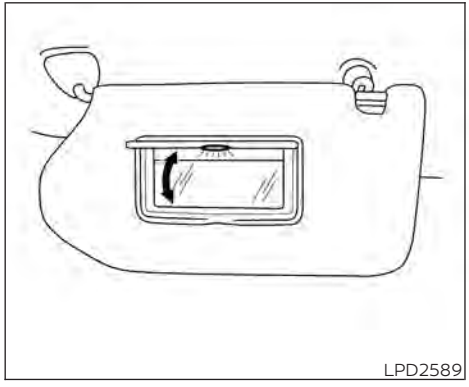

VANITY MIRRORS

To access the vanity mirror, pull the sun visor down and flip open the mirror cover. Some vanity mirrors are illuminated and turn on when the mirror cover is open.

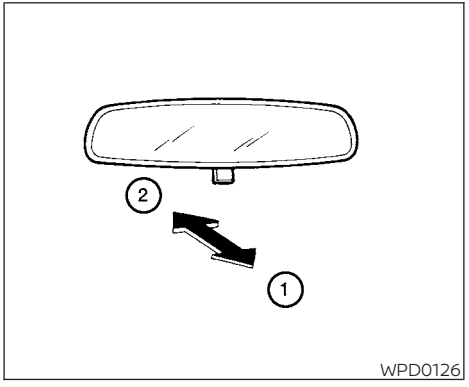

MANUAL ANTI-GLARE REARVIEW MIRROR (if so equipped)

Use the night position ① to reduce glare from the headlights of vehicles behind you at night.

Use the day position ② when driving in daylight hours.

⚠WARNING

Use the night position only when necessary, because it reduces rear view clarity.

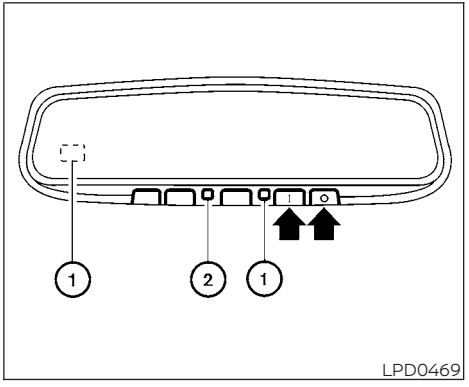

AUTOMATIC ANTI-GLARE REARVIEW MIRROR (if so equipped)

The inside mirror is designed so that it automatically dims during night time conditions and according to the intensity of the headlights of the vehicle following you. The automatic anti-glare feature is activated when the ignition switch is in the ON position.

NOTE:

Do not hang any objects over the sensors ① or apply glass cleaner to the sensors. Doing so will reduce the sensitivity of the sensors, resulting in improper operation.

The indicator light ② will illuminate when the automatic anti-glare feature is operating.

- To turn off the anti-glare feature, press the O button. The indicator light will turn off.
- To turn on the anti-glare feature, press the | button. The indicator light will turn on.

For information on HomeLink® Universal Transceiver operation, see the "HomeLink® Universal Transceiver" (P. 2-81).

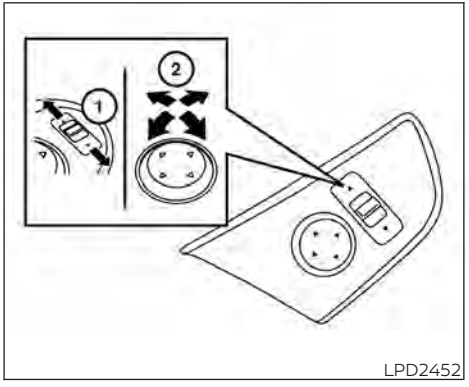

LPD2452

OUTSIDE MIRRORS

The outside mirror remote control only operates when the ignition switch is placed in the ON position.

Move the small switch ① to select the right or left mirror. Adjust each mirror to the desired position using the large switch ②. Move the small switch ① to the center (neutral) position to prevent accidentally moving the mirror.

⚠ WARNING

- **Do not adjust the mirrors while driving. You could lose control of your vehicle and cause an accident.**
- **Objects viewed in the outside mirror on the passenger side are closer than they appear. Be careful when moving to the right. Using only this mirror could cause an accident. Use the inside mirror or glance over your shoulder to properly judge distances to other objects.**

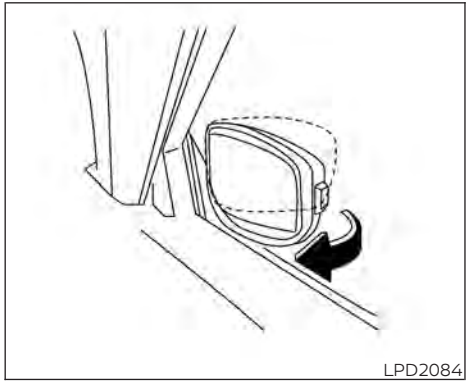
LPD2084

Manual folding outside mirrors

Pull the outside mirror toward the door to fold it.

Heated mirrors (if so equipped)

Some outside mirrors can be heated to defog, defrost or de-ice for improved visibility. For additional information, see "Rear window and outside mirror (if so equipped) defroster switch" (P. 2-56).

The memory seat system has three features:

- Memory storage function (Key-link)
- Memory storage function (Switch)
- Entry/exit function

Key-link, when enabled, automatically retains the driver's last seat and outside mirror (if so equipped) position for that specific key when the ignition is turned from ON to OFF.

Each memory switch button (1 or 2) on the driver's door can also store one additional position which is independent of the key-linked position.

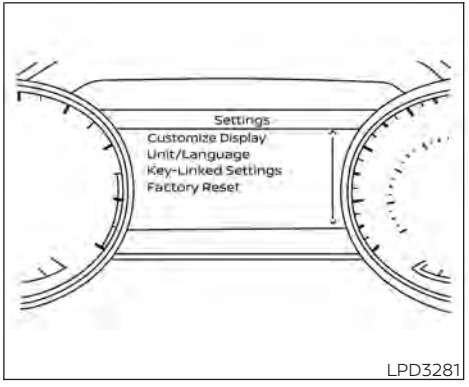

LPD3281

MEMORY STORAGE FUNCTION

Use the following process to setup key-link:

1. Unlock the vehicle with the desired Intelligent Key while the ignition is OFF.
2. Place the ignition in the ON position.
3. Within the "Settings" menu of the vehicle information display, select "Key-Linked Settings" and press the OK button on the steering switch.
4. While in the menu, press the OK button on the steering switch to turn the system ON/OFF.

Once step 4 is completed, every time the ignition is switched from ON to OFF, the memory positions of the driver's seat and outside mirror (if so equipped) are linked to the Intelligent Key.

Follow the same procedure if you want to link the 2nd, 3rd or 4th Intelligent Key.

NOTE:

If new memory positions are set prior to turning the ignition from ON to OFF, the previously linked memory positions for the respective key will be overwritten by new positions.

Recalling Intelligent Key memory positions

If the "Key-Linked Settings" are enabled in the vehicle information display for that particular key, every time you enter the vehicle the driver's seat and outside mirrors (if so equipped) will automatically move to the driver's last position of the respective Intelligent Key.

NOTE:

The key-linked memory positions can be different from the positions stored in the memory switch (1 or 2).

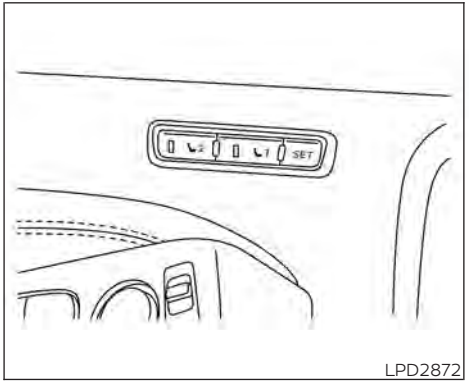

LPD2872

MEMORY STORAGE FUNCTION (switch)

Use the following process to manually store the two memory positions in the switch:

1. The vehicle should be stopped while setting the memory.
2. Adjust the driver's seat and outside mirror (if so equipped) to the desired positions by manually operating each adjusting switch. For additional information, see "Front power seat adjustment" (P. 1-4) and "Outside mirrors" (P. 3-30).
3. Push the SET switch and, within 5 seconds, push the memory switch (1 or 2).

The indicator light for the pushed memory switch will come on and stay on for approximately 5 seconds. The chime will sound when the memory is stored.

NOTE:

If a new memory position is stored in the same memory switch, the previous memory position will be overwritten by the new stored position.

Recalling switch memory positions

To recall the manually stored positions, press the memory switch (1 or 2). The driver's seat and outside mirror (if so equipped) will move to the positions stored to those buttons.

ENTRY/EXIT FUNCTION

This system is designed so that the driver's seat will automatically move when the shift lever is in the P (Park) position. This allows the driver to easily get in and out of the driver's seat.

The driver's seat will slide backward:

- When the driver's door is opened and the ignition switch is in the OFF position.
- When the ignition switch is turned from ACC to OFF with the driver's door open.

The driver's seat will return to the previous position:

- When the ignition switch is turned to ACC or ON while the shift lever is in the P (Park) position.

The entry/exit function can be adjusted or canceled through the "Vehicle Settings" in the vehicle information display by performing the following:

- Switch the Exit Seat Slide from ON to OFF.

SYSTEM OPERATION

The memory seat system will not work or will stop operating under the following conditions:

- When the vehicle speed is above 4 mph (7 km/h).
- When any of the memory switches are pushed while the memory seat is operating.
- When the switch for the driver's seat and steering column is pushed while the memory seat is operating.
- When the seat has already been moved to the memorized position.
- When no seat position is stored in the memory switch.
- When the shift lever is moved from P (Park) to any other position.

The memory seat system can be adjusted and canceled. It is recommended you visit a NISSAN dealer for this service.

4 Monitor, climate, audio, phone and voice recognition systems

NissanConnect® Owner's Manual 4-2
Control panel buttons 4-3
How to use the touch-screen 4-4
How to use the MENU button 4-5
(brightness control) button 4-7
How to use the VOL (volume) knob / PUSH (power) button 4-7
Selecting menu from launch bar 4-7
RearView Monitor (if so equipped) 4-8
RearView Monitor system operation 4-9
How to read the displayed lines 4-9
Difference between predicted and actual distances 4-10
How to park with predicted course lines 4-11
Adjusting the screen 4-13
How to turn on and off predicted course lines 4-13
RearView Monitor system limitations 4-13
System maintenance 4-15
Intelligent Around View Monitor (if so equipped) 4-16
Intelligent Around View Monitor system operation 4-17
Difference between predicted and actual distances 4-20
How to park with predicted course lines 4-22
How to switch the display 4-23
Adjusting the screen 4-24
Intelligent Around View Monitor system limitations 4-24
System maintenance 4-26
Moving Object Detection (MOD) (if so equipped) 4-27
MOD system operation 4-28
Turning MOD on and off (if so equipped) 4-30
MOD system limitations 4-30
System maintenance 4-31
Vents 4-31
Heater and air conditioner (manual) (if so equipped) 4-33
Controls 4-34
Heater operation 4-34
Air conditioner operation 4-35
Air flow charts 4-36
Heater and air conditioner (automatic) (if so equipped) 4-40
Automatic operation 4-41
Manual operation 4-42
Operating tips 4-43

Servicing air conditioner 4-44
Audio system 4-45
Radio 4-45
FM radio reception 4-45
AM radio reception 4-45
Audio operation precautions 4-46
FM/AM radio 4-49
USB (Universal Serial Bus) Connection Port 4-54
iPod®* player operation 4-57
Bluetooth® streaming audio 4-60
Steering wheel switch for audio control 4-63
Antenna 4-64
Siri® Eyes Free (if so equipped) 4-64
Requirements 4-64
Operating Siri® Eyes Free 4-65
Troubleshooting guide 4-66
Car phone or CB radio 4-67
Bluetooth® Hands-Free Phone System 4-67
Regulatory information 4-69
Using the system 4-69
Indicators 4-71
Control buttons 4-71
Bluetooth® connecting procedure 4-72
Voice commands 4-73
Phone display screen 4-75
Making a call 4-76
Receiving/Ending a call 4-76
During a call 4-77
Text messaging (if so equipped) 4-77
Bluetooth® connections screen 4-81
Phone and text message settings 4-82
Volume & beeps 4-84
iPod®/iPhone® 4-84

NISSANCONNECT® OWNER'S MANUAL

Refer to the digital NissanConnect® Owner's manual using the QR code on this page, or your printed NissanConnect® Owner's manual (if so equipped). This manual includes the following information:

- NissanConnect® Services (if so equipped)
- Navigation system (if so equipped)
- Audio system
- Apple CarPlay® (if so equipped)
- Android Auto ™ (if so equipped)
- Bluetooth® Hands-Free Phone system
- Viewing information
- Other settings
- Voice recognition
- General system information

CONTROL PANEL BUTTONS

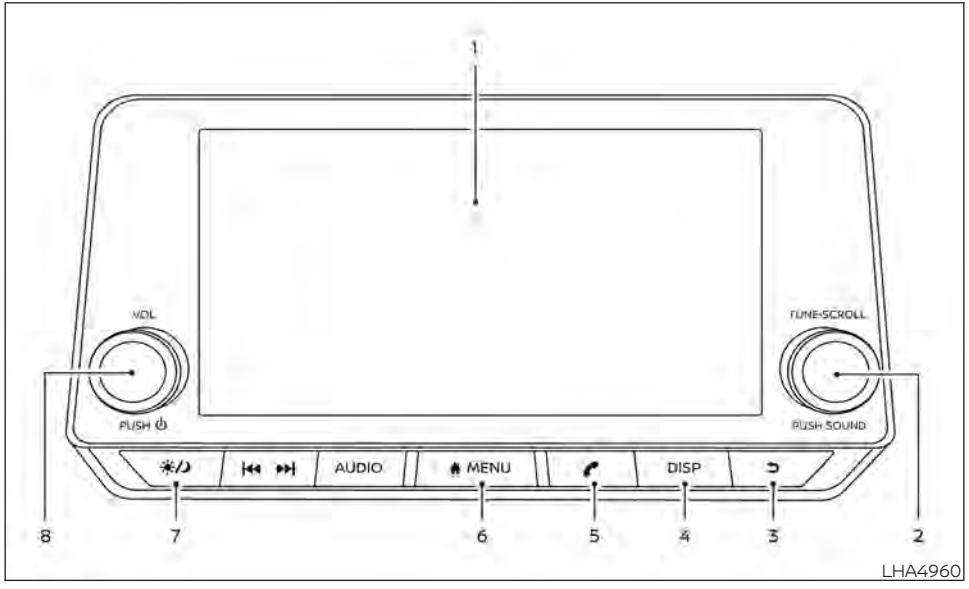

1. Display screen
2. TUNE·SCROLL knob / PUSH SOUND button
3. ↩ BACK button
4. DISP button
5. button*
6. MENU button
7. (brightness control) button
8. VOL (volume) knob / PUSH ⏻ (power) button

* For additional information regarding the Bluetooth® Hands-Free Phone System control button, see "Bluetooth® Hands-Free Phone System" (P. 4-67).

When you use this system, make sure the engine is running.

If you use the system with the engine not running for a long time, it will discharge the battery, and the engine will not start.

Reference symbols:

"Example" — Words marked in quotes refer to a key shown only on the display. These keys can be selected by touching the screen.

HOW TO USE THE TOUCH-SCREEN

⚠CAUTION

- **The glass display screen may break if it is hit with a hard or sharp object. If the glass screen breaks, do not touch it. Doing so could result in an injury.**
- **To clean the display, never use a rough cloth, alcohol, benzine, thinner or any kind of solvent or paper towel with a chemical cleaning agent. They will scratch or deteriorate the panel.**
- **Do not splash any liquid such as water or car fragrance on the display. Contact with liquid will cause the system to malfunction.**

To help ensure safe driving, some functions cannot be operated while driving.

The on-screen functions that are not available while driving will be "grayed out" or muted.

⚠WARNING

- **ALWAYS give your full attention to driving.**
- **Avoid using vehicle features that could distract you. If distracted, you could lose control of your vehicle and cause an accident.**

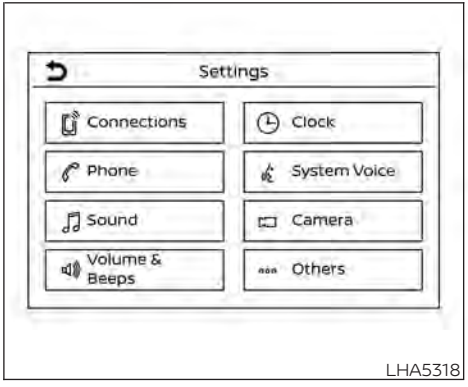

Touch-screen operation

Menu Item		Result
Selecting the item		Touch an item to select. To select the "Phone" key, touch the "Phone" key on the screen. Touch the " ⮌ " key to return to the previous screen.
Adjusting the item		Touch the "+" key or the "–" key to adjust the settings of an item. Touch the up arrow to scroll up the page one item at a time. Touch the down arrow to scroll down the page one item at a time.
Inputting characters		Touch the number key. There are some options available when inputting characters.
	123	Touch to manually enter numbers.
	OK	Completes the character input.

Touch-screen maintenance

If you clean the display screen, use a dry, soft cloth. If additional cleaning is necessary, use a small amount of neutral detergent with a soft cloth. Never spray the screen with water or detergent. Dampen the cloth first and then wipe the screen.

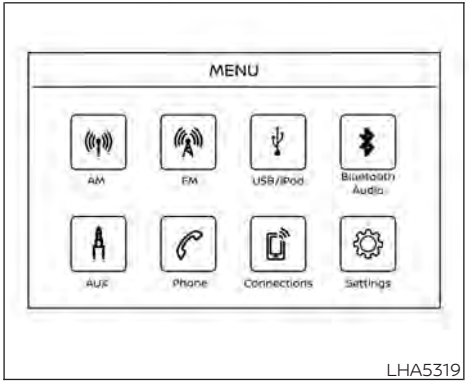

LHA5319

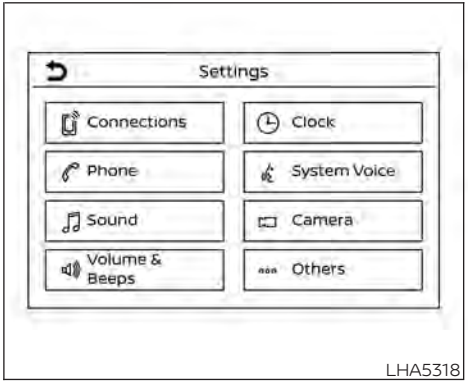

LHA5318

HOW TO USE THE MENU BUTTON

To select and/or adjust several functions, features and modes that are available for your vehicle:

1. Press the MENU button.
2. Touch the "Settings" key.
3. Touch the desired item.

Menu item			Result
Settings			Touch to change the following settings.
	Connections		Touch this key to select either Bluetooth® phone, Bluetooth® audio or USB audio options. For additional information, see "USB connections screen" (P. 4-55) and "Bluetooth® connections screen" (P. 4-81) in this section.
	Phone		For additional information, see "Bluetooth® Hands-Free Phone System" (P. 4-67) in this section.
	Sound		For additional information, see "Audio system" (P. 4-45) in this section.
	Volume & Beeps		For additional information, see "Volume & beeps" (P. 4-84) in this section.
	Clock		Touch this key to adjust clock settings.
		On-screen Clock	Touch to toggle ON or OFF the clock display on the upper right corner of the display screen.
		Clock Format	Touch to set the clock to 12 hour or 24 hour formats.
		Daylight Savings Time	Touch to adjusts the daylight saving time to on or off.
		Set Clock Manually	Touch to adjust the clock manually; then touch to change between AM and PM, the hour and the minutes.
	System Voice		For additional information, see "Settings" (P. 4-75) in this section.
	Camera		Touch this key to change the camera settings.
	Others		Touch this key to select and/or adjust various functions of this system. A screen with additional options will appear.
		Display	Touch this key to adjust the appearance of the display. For additional information, see "Adjusting the screen" (P. 4-13, 4-24) in this section.
		Language	Touch this key to change the language on the display.
		OSS Licenses	Touch this key to display software licensing information.
		Return All Settings to Default	Touch this key to return all settings to default and to clear the memory.

☼/☽ (brightness control) BUTTON

To change the display brightness, press the ☼/☽ button. Pressing the button again will change the display to the day or the night display.

Press and hold the ☼/☽ button for more than 2 seconds to turn the display off. Press and hold the button again to turn the display on.

HOW TO USE THE VOL (volume) KNOB / PUSH ⏻ (power) BUTTON

Press the PUSH ⏻ (power) button to turn audio function on and off. Turn the VOL (volume) knob to adjust audio volume.

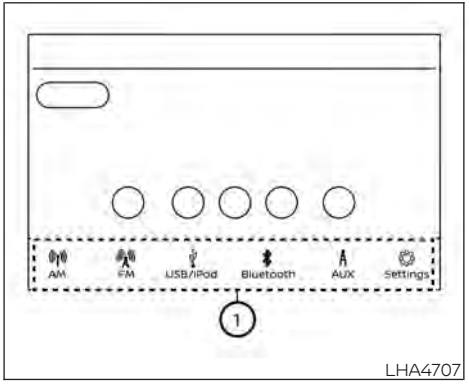

SELECTING MENU FROM LAUNCH BAR

Various system functions can be accessed by touching the items on the Launch Bar ① which is displayed on most of the main menu screens (the Launch Bar does not appear on some screens such as settings screens, camera screens, etc.)

Touch the keys on the Launch Bar to display the corresponding menu screens.

The following menu items are available on the Launch Bar:

- AM
- FM
- USB/iPod
- Bluetooth
- AUX
- Settings

REARVIEW MONITOR (if so equipped)

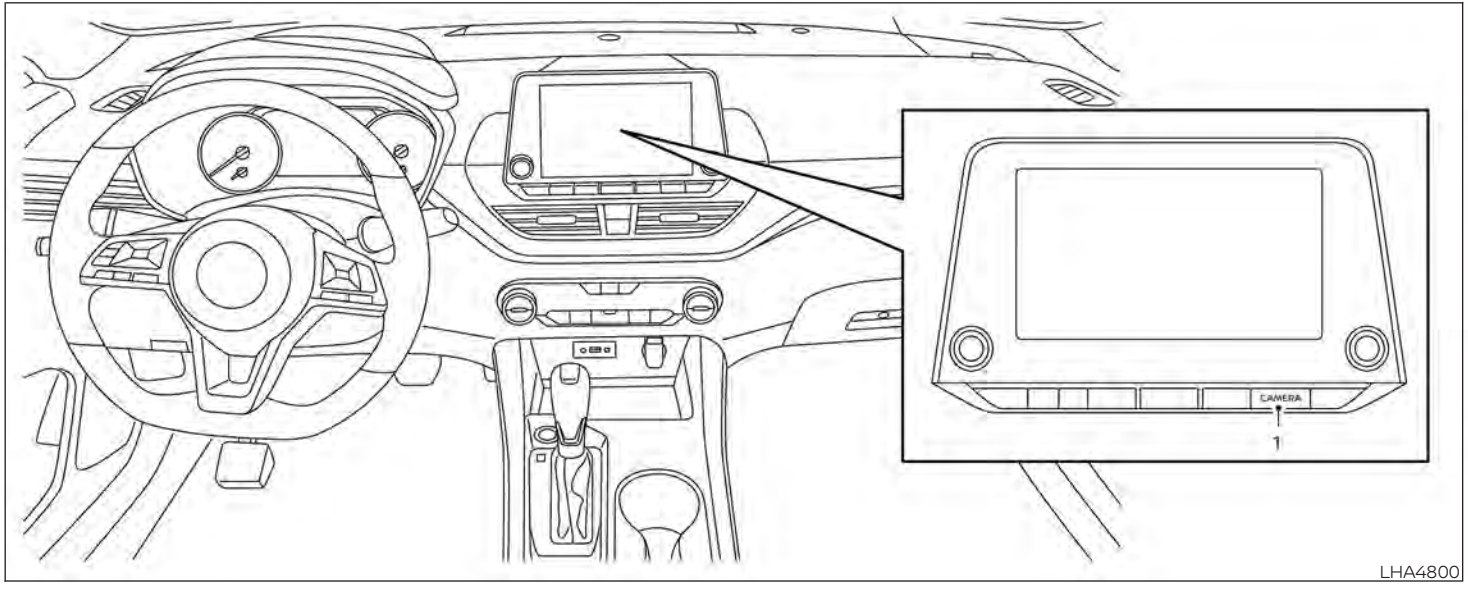

1. CAMERA or DISP button

⚠ WARNING

- **Failure to follow the warnings and instructions for proper use of the RearView Monitor system could result in serious injury or death.**
- **RearView Monitor is a convenience feature and is not a substitute for proper backing. Always turn and look out the windows and check mirrors to be sure that it is safe to move before operating the vehicle. Always back up slowly.**
- **The system is designed as an aid to the driver in showing large stationary objects directly behind the vehicle, to help avoid damaging the vehicle.**

- **The distance guide lines and the vehicle width lines should be used as a reference only when the vehicle is on a level paved surface. The distance viewed on the monitor is for reference only and may be different than the actual distance between the vehicle and displayed objects.**

⚠ CAUTION

Do not scratch the camera lens when cleaning dirt or snow from the front of the camera.

The RearView Monitor system automatically shows a rear view of the vehicle when the shift lever is shifted into the R (Reverse) position. The radio can still be heard while the RearView Monitor is active.

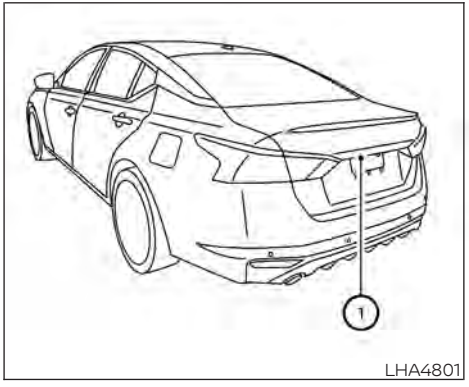

LHA4801

To display the rear view, the RearView Monitor system uses a camera located just above the vehicle's license plate ①.

REARVIEW MONITOR SYSTEM OPERATION

With the ignition switch in the ON position, move the shift lever to the R (Reverse) position to operate the RearView Monitor.

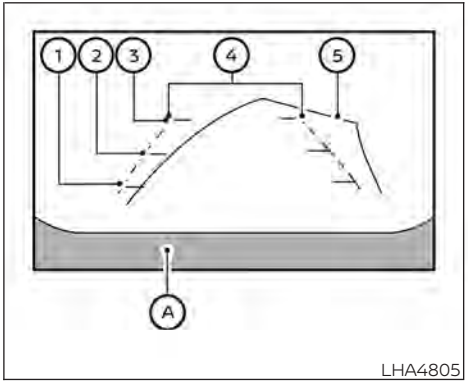

LHA4805

HOW TO READ THE DISPLAYED LINES

Guiding lines which indicate the vehicle width and distances to objects with reference to the vehicle body line Ⓐ are displayed on the monitor.

Distance guide lines

Indicate distances from the vehicle body.

- Red line ①: approx. 1.5 ft (0.5 m)
- Yellow line ②: approx. 3 ft (1 m)
- Green line ③: approx. 7 ft (2 m)

Vehicle width guide lines ④

Indicate the vehicle width when backing up.

Predicted course lines ⑤

Indicate the predicted course when backing up. The predicted course lines will be displayed on the monitor when the shift lever is in the R (Reverse) position and the steering wheel is turned. The predicted course lines will move depending on how much the steering wheel is turned and will not be displayed while the steering wheel is in the straight-ahead position.

The vehicle width guide lines and the width of the predicted course lines are wider than the actual width and course.

DIFFERENCE BETWEEN PREDICTED AND ACTUAL DISTANCES

The displayed guidelines and their locations on the ground are for approximate reference only. Objects on uphill or downhill surfaces or projecting objects will be actually located at distances different from those displayed in the monitor relative to the guidelines (refer to illustrations). When in doubt, turn around and view the objects as you are backing up, or park and exit the vehicle to view the positioning of objects behind the vehicle.

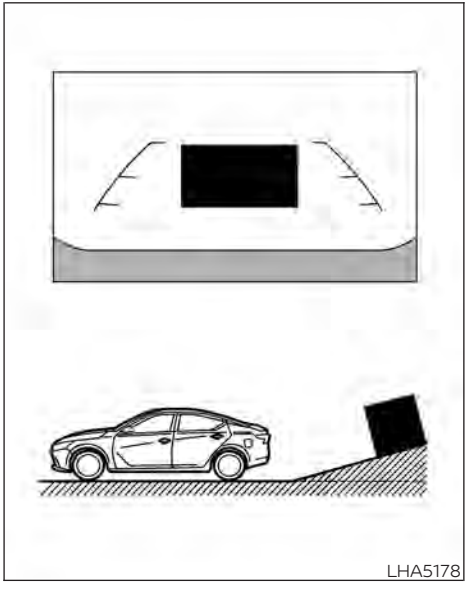

Backing up on a steep uphill

When backing up the vehicle up a hill, the distance guide lines and the vehicle width guide lines are shown closer than the actual distance. Note that any object on the hill is further than it appears on the monitor.

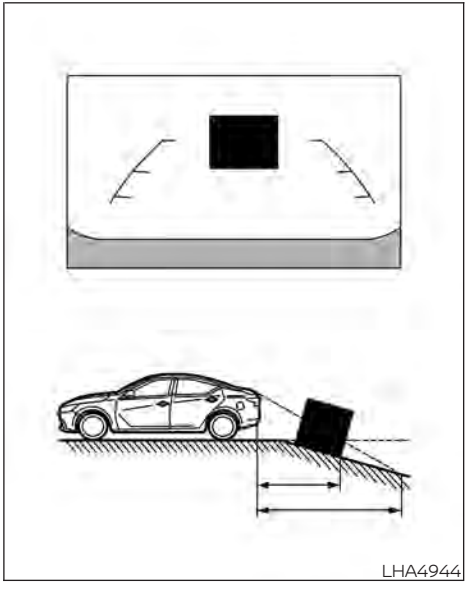

Backing up on a steep downhill

When backing up the vehicle down a hill, the distance guide lines and the vehicle width guide lines are shown farther than the actual distance. Note that any object on the hill is closer than it appears on the monitor.

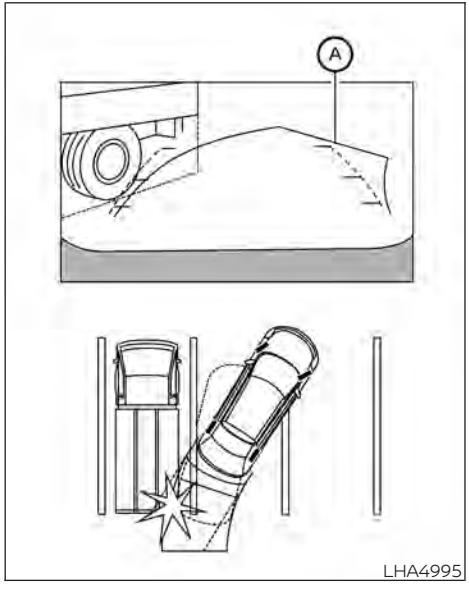

Backing up near a projecting object

The predicted course lines Ⓐ do not touch the object in the display. However, the vehicle may hit the object if it projects over the actual backing up course.

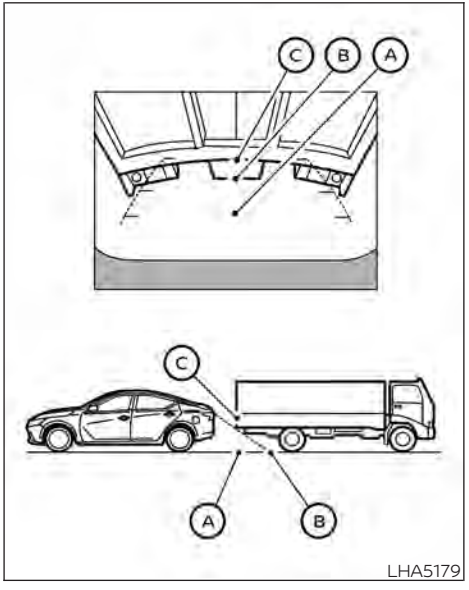

Backing up behind a projecting object

The position Ⓒ is shown farther than the position Ⓑ in the display. However, the position Ⓒ is actually at the same distance as the position Ⓐ. The vehicle may hit the object when backing up to the position Ⓐ if the object projects over the actual backing up course.

HOW TO PARK WITH PREDICTED COURSE LINES

⚠ WARNING

- **If the tires are replaced with different sized tires, the predicted course lines may be displayed incorrectly.**
- **On a snow-covered or slippery road, there may be a difference between the predicted course line and the actual course line.**
- **If the battery is disconnected or becomes discharged, the predicted course lines may be displayed incorrectly. If this occurs, please perform the following procedures:**
  - **Turn the steering wheel from lock to lock while the engine is running.**
  - **Drive the vehicle on a straight road for more than 5 minutes.**
- **When the steering wheel is turned with the ignition switch in the ACC position, the predicted course lines may be displayed incorrectly.**

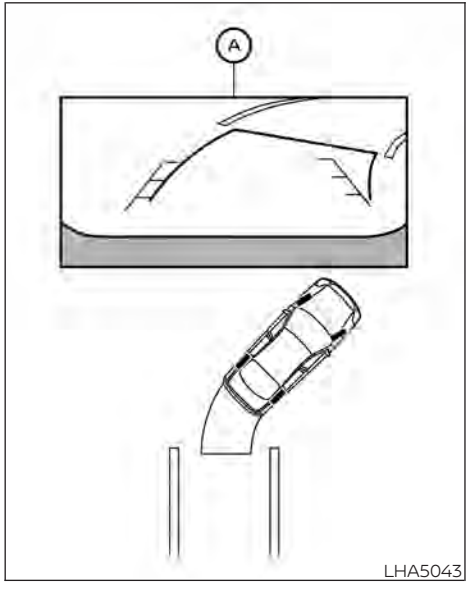

1. Visually check that the parking space is safe before parking your vehicle.
2. The rear view of the vehicle is displayed on the screen Ⓐ when the shift lever is moved to the R (Reverse) position.

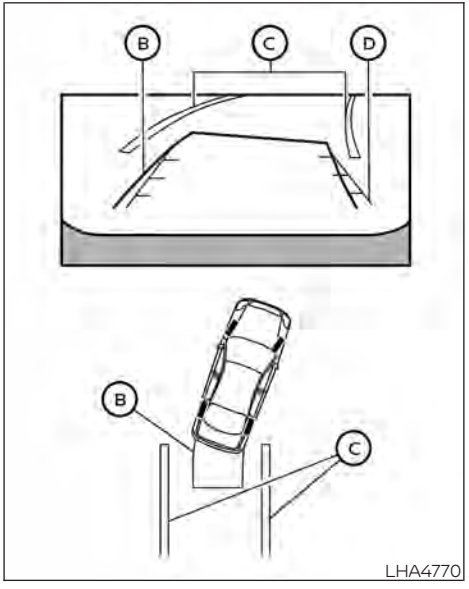

3. Slowly back up the vehicle adjusting the steering wheel so that the predicted course lines Ⓑ enter the parking space Ⓒ.
4. Maneuver the steering wheel to make the vehicle width guide lines Ⓓ parallel to the parking space Ⓒ while referring to the predicted course lines.
5. When the vehicle is parked in the space completely, move the shift lever to the P (Park) position and apply the parking brake.

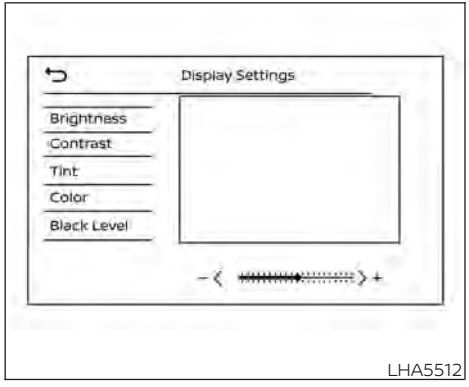

LHA5512

ADJUSTING THE SCREEN

For vehicles with CAMERA button

1. Press the CAMERA button.
2. Touch the "Display Settings" key.
3. Touch the "Brightness", "Contrast", Tint", "Color", or "Black Level" key.
4. Adjust the item by touching the "+" or "–" key on the touch-screen display.

For vehicles with DISP button

1. Press the MENU button.
2. Touch the "Settings" key.
3. Touch the "Camera" key
4. Touch the "Display Settings" key.
5. Touch the "Brightness", "Contrast", Tint", "Color", or "Black Level" key.
6. Adjust the item by touching the "+" or "–" key on the touch-screen display.

NOTE:

Do not adjust any of the display settings of the RearView Monitor while the vehicle is moving.

HOW TO TURN ON AND OFF PREDICTED COURSE LINES

For vehicles with CAMERA button

To toggle ON and OFF the predicted course lines while in the P (Park) position:

1. Press the CAMERA button.
2. Touch the "Predicted Course Lines" key to turn the feature ON or OFF.

To toggle ON and OFF the predicted course lines while in the R (Reverse) position, press the CAMERA button.

For vehicles with DISP button

To toggle ON and OFF the predicted course lines while in the P (Park) position:

1. Touch the "Settings" key.
2. Touch the "Camera" key.
3. Touch the "Predicted Course Lines" key to turn the feature ON or OFF.

REARVIEW MONITOR SYSTEM LIMITATIONS

⚠WARNING

Listed below are the system limitations for RearView Monitor. Failure to operate the vehicle in accordance with these system limitations could result in serious injury or death.

- **The system cannot completely eliminate blind spots and may not show every object.**

- **Underneath the bumper and the corner areas of the bumper cannot be viewed on the RearView Monitor because of its monitoring range limitation. The system will not show small objects below the bumper, and may not show objects close to the bumper or on the ground.**
- **Objects viewed in the RearView Monitor differ from actual distance because a wide-angle lens is used.**
- **Objects in the RearView Monitor will appear visually opposite compared to when viewed in the rearview and outside mirrors.**
- **Use the displayed lines as a reference. The lines are highly affected by the number of occupants, fuel level, vehicle position, road conditions and road grade.**
- **Make sure that the trunk is securely closed when backing up.**
- **Do not put anything on the rearview camera. The rearview camera is installed above the license plate.**

- **When washing the vehicle with high pressure water, be sure not to spray it around the camera. Otherwise, water may enter the camera unit causing water condensation on the lens, a malfunction, fire or an electric shock.**
- **Do not strike the camera. It is a precision instrument. Otherwise, it may malfunction or cause damage resulting in a fire or an electric shock.**

The following are operating limitations and do not represent a system malfunction:

- When the temperature is extremely high or low, the screen may not clearly display objects.
- When strong light directly shines on the camera, objects may not be displayed clearly.
- Vertical lines may be seen in objects on the screen. This is due to strong reflected light from the bumper.
- The screen may flicker under fluorescent light.
- The colors of objects on the RearView Monitor may differ somewhat from the actual color of objects.
- Objects on the monitor may not be clear in a dark environment.
- There may be a delay when switching between views.
- If dirt, rain or snow accumulate on the camera, the RearView Monitor may not display objects clearly. Clean the camera.
- Do not use wax on the camera lens. Wipe off any wax with a clean cloth dampened with a diluted mild cleaning agent, then wipe with a dry cloth.

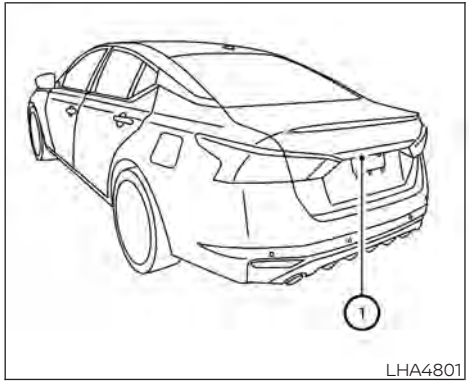

If dirt, rain or snow accumulates on the camera ①, the RearView Monitor may not display objects clearly. Clean the camera by wiping it with a cloth dampened with a diluted mild cleaning agent and then wiping it with a dry cloth.

SYSTEM MAINTENANCE

⚠ CAUTION

- **Do not use alcohol, benzine or thinner to clean the camera. This will cause discoloration.**
- **Do not damage the camera as the monitor screen may be adversely affected.**

INTELLIGENT AROUND VIEW MONITOR (if so equipped)

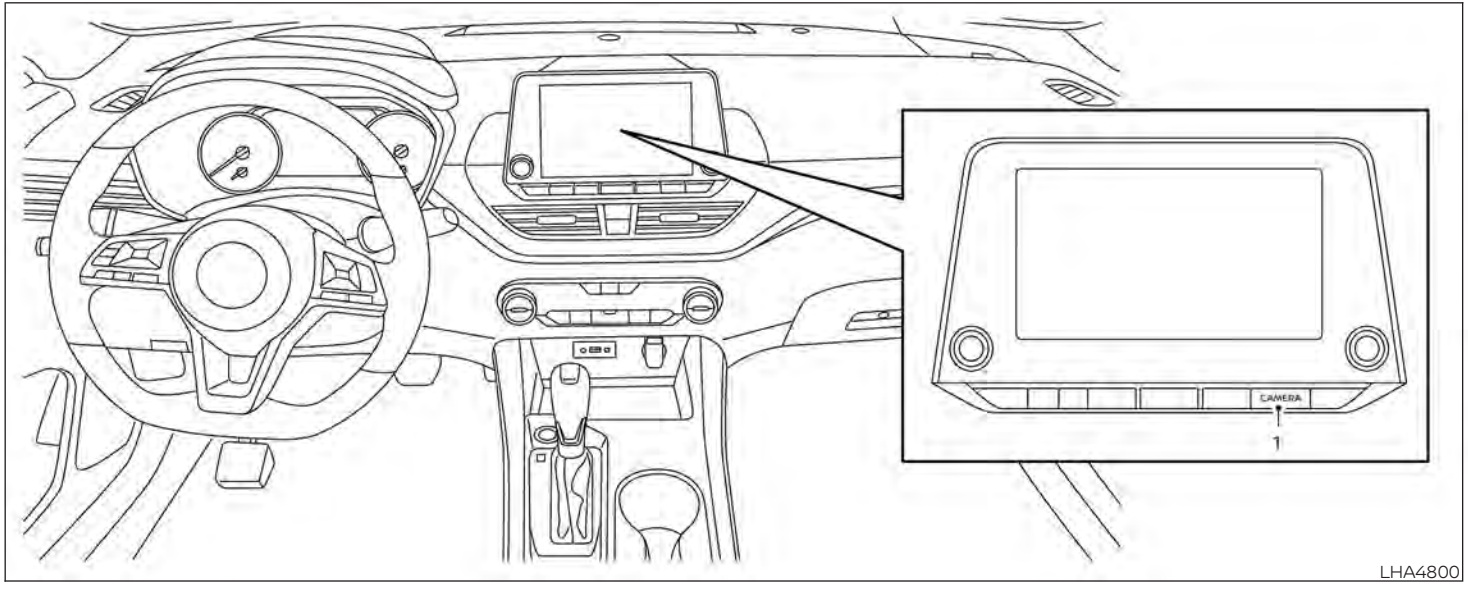

1. CAMERA button

⚠ WARNING

Failure to follow the warnings and instructions for the proper use of the Intelligent Around View Monitor system could result in serious injury or death

- **The Intelligent Around View Monitor is a convenience feature and is not a substitute for proper vehicle operation because it has areas where objects cannot be viewed. The four corners of the vehicle in particular, are areas where objects do not always appear in the bird's-eye, front, or rear views. Always check your surroundings to be sure that it is safe to move before operating the vehicle. Always operate the vehicle slowly.**
- **The driver is always responsible for safety during parking and other maneuvers.**

⚠ CAUTION

Do not scratch the camera lens when cleaning dirt or snow from the front of the camera.

The Intelligent Around View Monitor system is designed as an aid to the driver in situations such as slot parking or parallel parking.

The monitor displays various views of the position of the vehicle in a split screen format. Not all views are available at all times.

Available views:

- Front View
  An approximately 150–degree view of the front of the vehicle.
- Rear View
  An approximately 150–degree view of the rear of the vehicle.
- Bird's-Eye View
  The surrounding views of the vehicle from above.
- Front-Side View
  The view around and ahead of the front passenger's side wheel.
- Full Screen Rear View
  The view to the rear of the vehicle (which is a little wider than the standard Rear View).

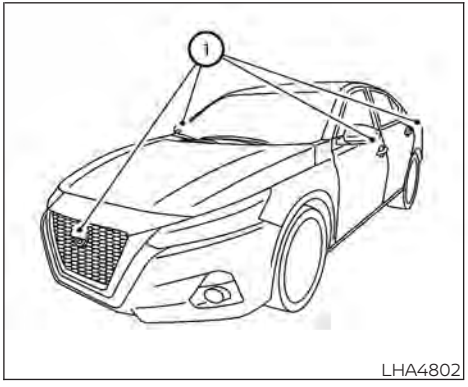

LHA4802

To display the multiple views, the Intelligent Around View Monitor system uses cameras located in the front grille, on the vehicle's outside mirrors and one just above the vehicle's license plate ①.

INTELLIGENT AROUND VIEW MONITOR SYSTEM OPERATION

With the ignition switch in the ON position, move the shift lever to the R (Reverse) position or press the CAMERA button to operate the Intelligent Around View Monitor.

The screen displayed on the Intelligent Around View Monitor will automatically return to the previous screen 3 minutes after the CAMERA button has been pressed with the shift lever in a position other than the R (Reverse) position.

Available views

⚠ WARNING

- **The distance guide lines and the vehicle width lines should be used as a reference only when the vehicle is on a paved, level surface. The apparent distance viewed on the monitor may be different than the actual distance between the vehicle and displayed objects.**
- **Use the displayed lines and the bird's-eye view as a reference. The lines and the bird's-eye view are greatly affected by the number of occupants, cargo, fuel level, vehicle position, road condition and road grade.**
- **If the tires are replaced with different sized tires, the predicted course lines and the bird's-eye view may be displayed incorrectly.**
- **When driving the vehicle up a hill, objects viewed in the monitor are further than they appear. When driving the vehicle down a hill, objects viewed in the monitor are closer than they appear.**
- **Objects in the rear view will appear visually opposite compared to when viewed in the monitor and outside mirrors.**
- **Use the mirrors or actually look to properly judge distances to other objects.**
- **On a snow-covered or slippery road, there may be a difference between the predicted course lines and the actual course line.**
- **The vehicle width and predicted course lines are wider than the actual width and course.**
- **The displayed lines will appear slightly off to the right, because the rearview camera is not installed in the rear center of the vehicle.**

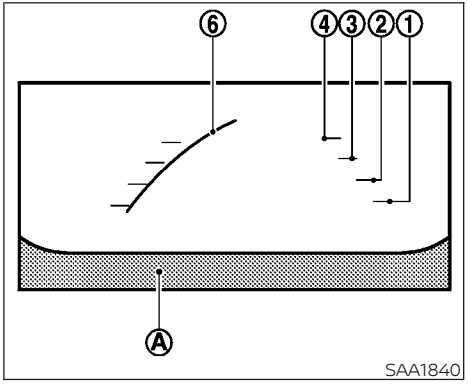

Front view

Front and rear view

Guiding lines that indicate the approximate vehicle width and distance to objects with reference to the vehicle body line Ⓐ are displayed on the monitor.

Distance guide lines:

Indicate distances from the vehicle body:

- Red line ①: approximately 1.5 ft (0.5 m)
- Yellow line ②: approximately 3 ft (1 m)
- Green line ③: approximately 7 ft (2 m)
- Green line ④: approximately 10 ft (3 m) (if so equipped)

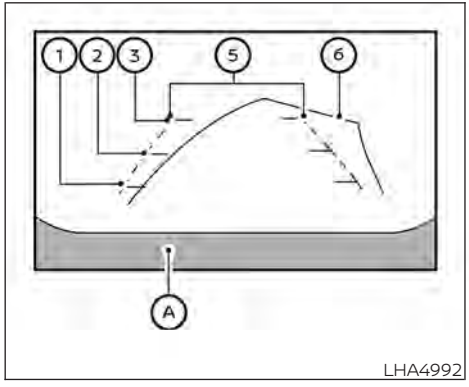

Rear view

Vehicle width guide lines ⑤:

Indicate the approximate vehicle width when backing up.

Predicted course lines ⑥:

Indicate the predicted course when operating the vehicle. The predicted course lines will be displayed on the monitor when the steering wheel is turned. The predicted course lines will move depending on how much the steering wheel is turned and will not be displayed while the steering wheel is in the straight-ahead position.

The front view will not be displayed when the vehicle speed is above 6 mph (10 km/h).

NOTE:

When the monitor displays the front view and the steering wheel turns about 90 degrees or less from the straight-ahead position, both the right and left predicted course lines ⑥ are displayed. When the steering wheel turns about 90 degrees or more, a line is displayed only on the opposite side of the turn.

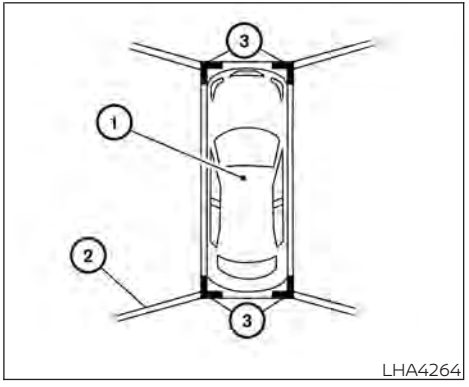

Bird's-eye view

The bird's-eye view shows the overhead view of the vehicle, which helps confirm the vehicle position and the predicted course to a parking space.

The vehicle icon ① shows the position of the vehicle. Note that the apparent distance between objects viewed in the bird's-eye view may differ somewhat from the actual distance to the vehicle.

The areas that the cameras cannot cover ② are indicated in black.

After the ignition switched is placed in the ON position, the non-viewable area ② is highlighted in yellow for 3 seconds after the birds-eye view is displayed.

In addition, the non-viewable corners are displayed in red and will blink for the first 3 seconds ③ to remind the driver to be cautious.

⚠ WARNING

- **Objects in the bird's-eye view will appear further than the actual distance.**
- **Tall objects, such as a curb or vehicle, may be misaligned or not displayed at the seam of the views.**
- **Objects that are above the camera cannot be displayed.**
- **The view of the bird's-eye view may be misaligned when the camera position alters.**
- **A line on the ground may be misaligned and is not seen as being straight at the seam of the views. The misalignment will increase as the line proceeds away from the vehicle.**

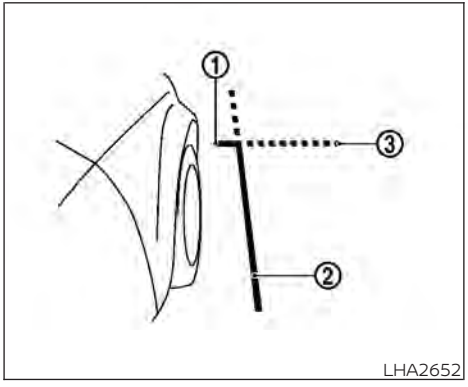

Front-side view

Guiding lines

Guiding lines that indicate the approximate width and the front end of the vehicle are displayed on the monitor.

The front-of-vehicle line ① shows the front part of the vehicle.

The side-of-vehicle line ② shows the approximate vehicle width including the outside mirrors.

The extensions ③ of both the front ① and side ② lines are shown with a green dotted line.

DIFFERENCE BETWEEN PREDICTED AND ACTUAL DISTANCES

The displayed guidelines and their locations on the ground are for approximate reference only. Objects on uphill or downhill surfaces or projecting objects will be actually located at distances different from those displayed in the monitor relative to the guidelines (refer to illustrations). When in doubt, turn around and view the objects as you are backing up, or park and exit the vehicle to view the positioning of objects behind the vehicle.

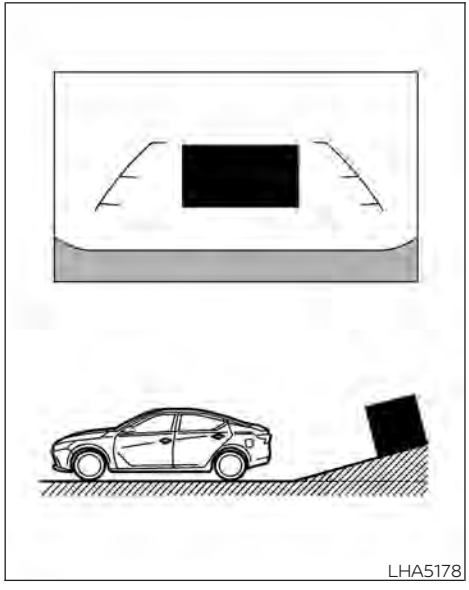

Backing up on a steep uphill

When backing up the vehicle up a hill, the distance guide lines and the vehicle width guide lines are shown closer than the actual distance. Note that any object on the hill is further than it appears on the monitor.

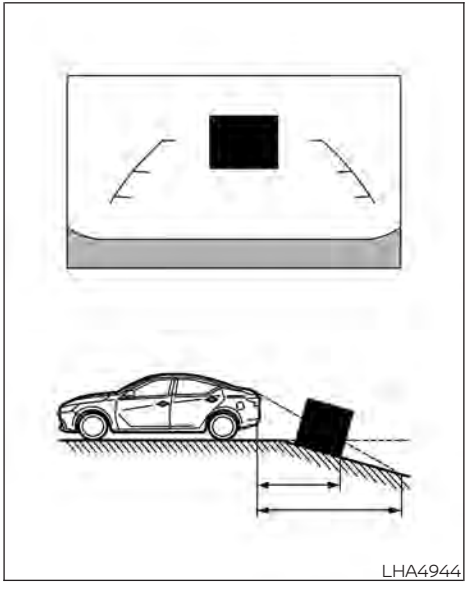

Backing up on a steep downhill

When backing up the vehicle down a hill, the distance guide lines and the vehicle width guide lines are shown farther than the actual distance. Note that any object on the hill is closer than it appears on the monitor.

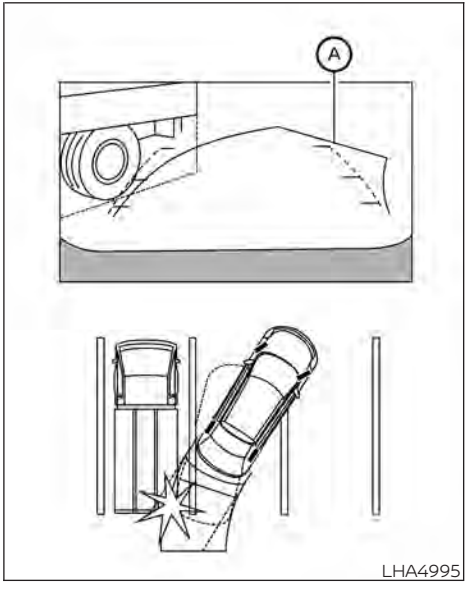

Backing up near a projecting object

The predicted course lines Ⓐ do not touch the object in the display. However, the vehicle may hit the object if it projects over the actual backing up course.

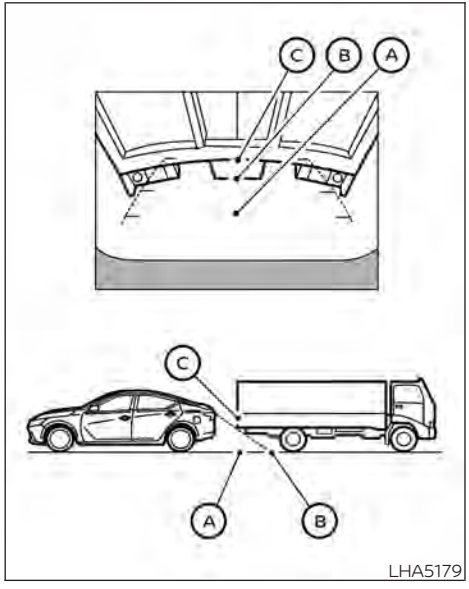

Backing up behind a projecting object

The position Ⓒ is shown farther than the position Ⓑ in the display. However, the position Ⓒ is actually at the same distance as the position Ⓐ. The vehicle may hit the object when backing up to the position Ⓐ if the object projects over the actual backing up course.

HOW TO PARK WITH PREDICTED COURSE LINES

⚠WARNING

- **If the tires are replaced with different sized tires, the predicted course lines may be displayed incorrectly.**
- **On a snow-covered or slippery road, there may be a difference between the predicted course line and the actual course line.**
- **If the battery is disconnected or becomes discharged, the predicted course lines may be displayed incorrectly. If this occurs, please perform the following procedures:**
  - **Turn the steering wheel from lock to lock while the engine is running.**
  - **Drive the vehicle on a straight road for more than 5 minutes.**
- **When the steering wheel is turned with the ignition switch in the ACC position, the predicted course lines may be displayed incorrectly.**

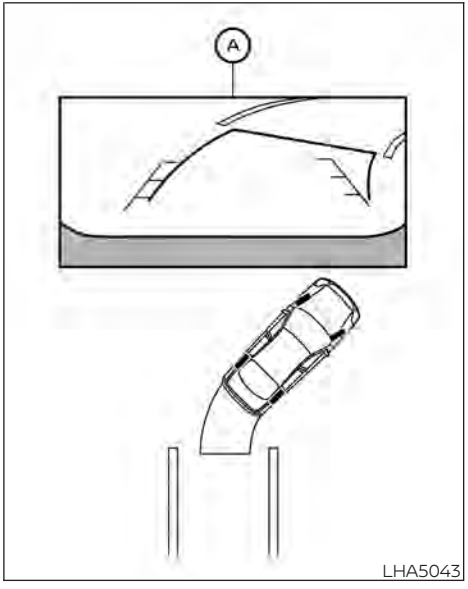

1. Visually check that the parking space is safe before parking your vehicle.
2. The rear view of the vehicle is displayed on the screen Ⓐ when the shift lever is moved to the R (Reverse) position.

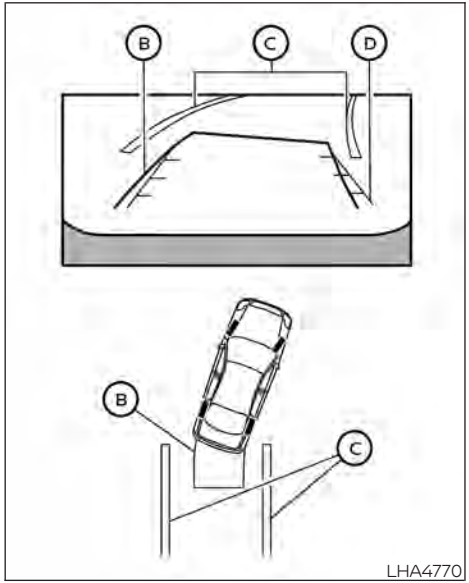

3. Slowly back up the vehicle adjusting the steering wheel so that the predicted course lines Ⓑ enter the parking space Ⓒ.
4. Maneuver the steering wheel to make the vehicle width guide lines Ⓓ parallel to the parking space Ⓒ while referring to the predicted course lines.
5. When the vehicle is parked in the space completely, move the shift lever to the P (Park) position and apply the parking brake.

HOW TO SWITCH THE DISPLAY

With the ignition switch in the ON position, press the CAMERA button or move the shift lever to the R (Reverse) position to operate the Intelligent Around View Monitor.

The Intelligent Around View Monitor displays different split screen views depending on the position of the shift lever. Press the CAMERA button to switch between the available views.

If the shift lever is in the R (Reverse) position, the available views are:

- Rear view/bird's-eye view split screen
- Rear view/front-side view split screen
- Full screen rear view

If the shift lever is in the P (Park) or D (Drive) position, the available views are:

- Front view/bird's-eye view split screen
- Front view/front-side view split screen

The display will switch from the Intelligent Around View Monitor screen when:

- The shift lever is in the D (Drive) position and the vehicle speed increases above approximately 6 mph (10 km/h)
- A different screen is selected.

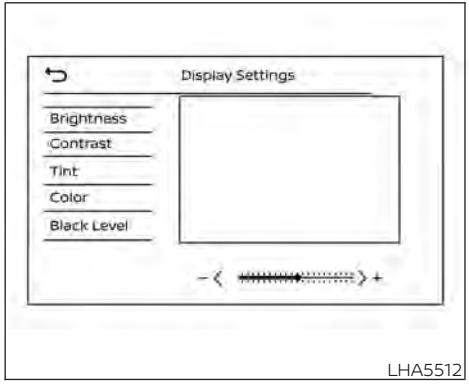

ADJUSTING THE SCREEN

1. While on the main menu screen, touch the "Settings" key.
2. Use the arrow to tab to the next screen and touch the "Camera" key.
3. Touch the "Display Settings" key.
4. Touch the "Brightness", "Contrast", Tint", "Color", or "Black Level" key.
5. Adjust the item by touching the "+" or "–" key on the touch-screen display.

NOTE:

Do not adjust any of the display settings of the Intelligent Around View Monitor while the vehicle is moving. Make sure the parking brake is firmly applied.

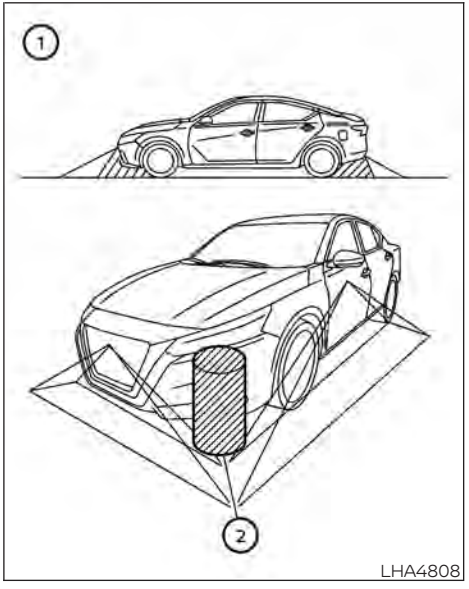

INTELLIGENT AROUND VIEW MONITOR SYSTEM LIMITATIONS

⚠ WARNING

Listed below are the system limitations for Intelligent Around View Monitor. Failure to operate the vehicle in accordance with these system limitations could result in serious injury or death.

- **Do not use the Intelligent Around View Monitor with the outside mirrors in the stored position, and make sure that the trunk is securely closed when operating the vehicle using the Intelligent Around View Monitor.**
- **The apparent distance between objects viewed on the Intelligent Around View Monitor differs from the actual distance.**
- **The cameras are installed on the front grille, the outside mirrors and above the rear license plate. Do not put anything such as a license plate frame on the vehicle that covers or blocks the view of the cameras.**
- **When washing the vehicle with high pressure water, be sure not to spray it around the cameras. Otherwise, water may enter the camera unit causing water condensation on the lens, a malfunction, fire or an electric shock.**
- **Do not strike the cameras. They are precision instruments. Doing so could cause a malfunction or cause damage resulting in a fire or an electric shock.**

There are some areas where the system will not show objects and the system does not warn of moving objects. When in the front or rear view display, an object below the bumper or on the ground may not be viewed ①. When in the bird's-eye view, a tall object near the seam ② of the camera viewing areas will not appear in the monitor.

The following are operating limitations and do not represent a system malfunction:

- There may be a delay when switching between views.
- When the temperature is extremely high or low, the screen may not display objects clearly.
- When strong light directly shines on the camera, objects may not be displayed clearly.
- The screen may flicker under fluorescent light.
- The colors of objects on the Intelligent Around View Monitor may differ somewhat from the actual color of objects.
- Objects on the Intelligent Around View Monitor may not be clear and the color of the object may differ in a dark environment.
- There may be differences in sharpness between each camera view of the bird's-eye view.
- Do not use wax on the camera lens. Wipe off any wax with a clean cloth that has been dampened with a diluted mild cleaning agent, then wipe with a dry cloth.

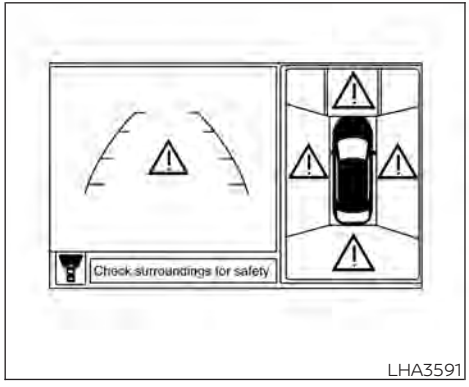

LHA3591

System temporarily unavailable

When the "!" icon is displayed on the screen, there are abnormal conditions in the Intelligent Around View Monitor. This will not hinder normal driving operation but the system should be inspected. It is recommended that you visit a NISSAN dealer for this service.

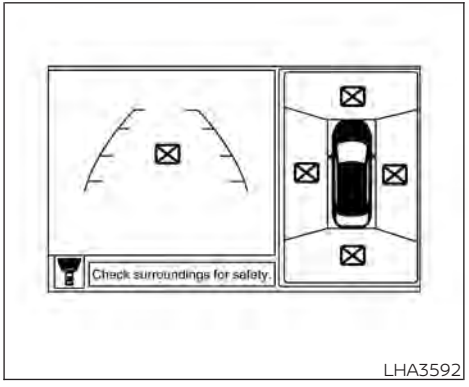

LHA3592

When the "[X]" icon is displayed on the screen, the camera image may be receiving temporary electronic disturbances from surrounding devices. This will not hinder normal driving operation but the system should be inspected if it occurs frequently. It is recommended that you visit a NISSAN dealer for this service.

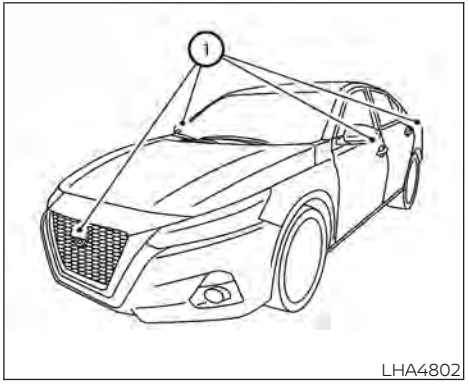

LHA4802

SYSTEM MAINTENANCE

⚠ CAUTION

- **Do not use alcohol, benzine or thinner to clean the camera. This will cause discoloration.**
- **Do not damage the cameras as the monitor screen may be adversely affected.**

If dirt, rain or snow accumulates on any of the cameras ①, the Intelligent Around View Monitor may not display objects clearly. Clean the camera by wiping with a cloth dampened with a diluted mild cleaning agent and then wiping with a dry cloth.

MOVING OBJECT DETECTION (MOD) (if so equipped)

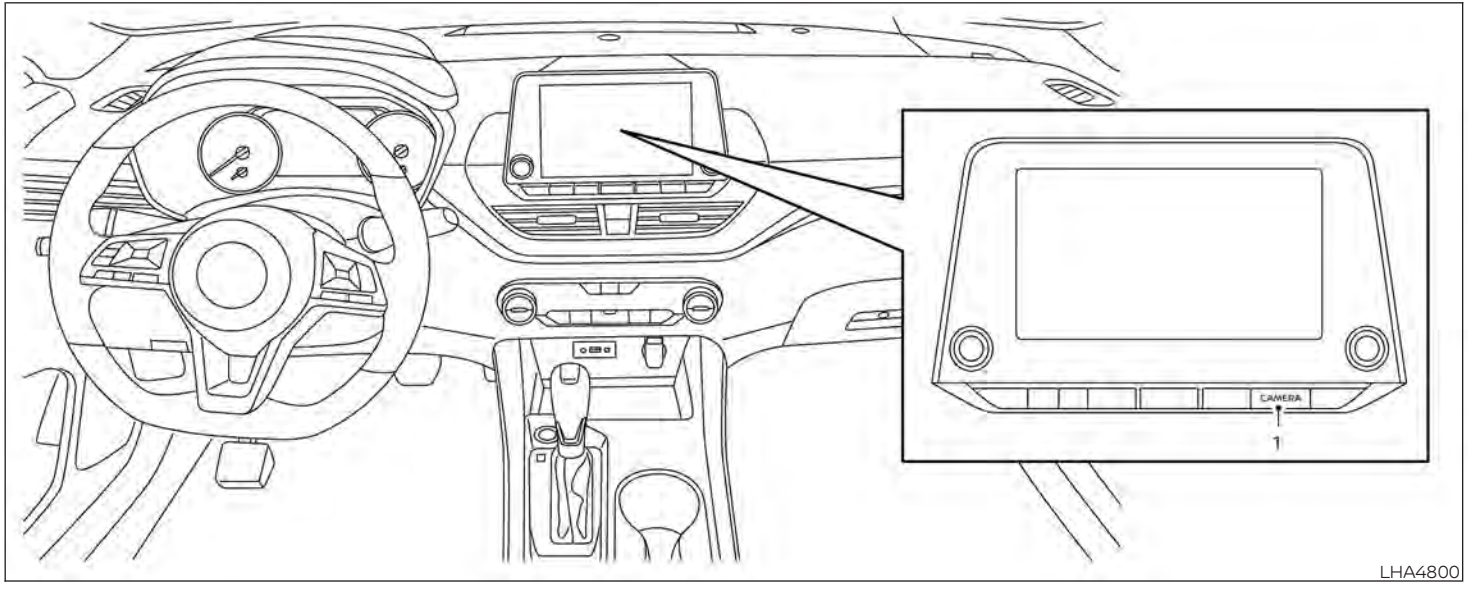

1. CAMERA button

⚠ WARNING

Failure to follow the warnings and instructions for proper use of the Moving Object Detection (MOD) system could result in serious injury or death

- **The MOD system is not a substitute for proper vehicle operation and is not designed to prevent contact with objects surrounding the vehicle. When maneuvering, always use the outside mirrors and rearview mirror and turn and check the surroundings to ensure it is safe to maneuver.**
- **The system is deactivated at speeds above 5 mph (8 km/h). It is reactivated at lower speeds.**
- **The MOD system is not designed to detect surrounding stationary objects.**

The MOD system can inform the driver of moving objects near the vehicle when backing out of garages, maneuvering in parking lots and in other such instances.

The MOD system detects moving objects by using image processing technology on the image shown in the display.

MOD SYSTEM OPERATION

The MOD system will turn on automatically under the following conditions:

- When the shift lever is in the R (Reverse) position.
- When the CAMERA button is pressed to activate the camera view on the display.
- When vehicle speed decreases below approximately 6 mph (10 km/h) and the camera screen is displayed.

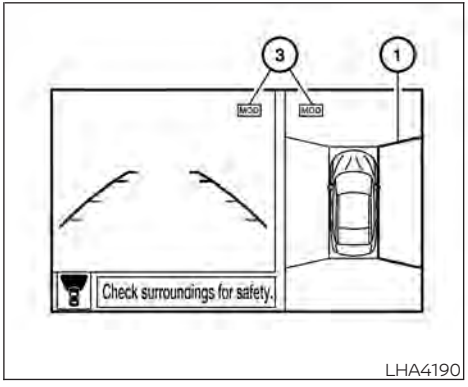

Front and bird's-eye views

The MOD system operates in the following conditions when the camera view is displayed:

- When the shift lever is in the P (Park) or N (Neutral) position and the vehicle is stopped, the MOD system detects moving objects in the bird's-eye view. The MOD system will not operate if the outside mirrors are moving in or out, in the stowed position, or if either front door is opened.

Rear and bird's-eye views

- When the shift lever is in the D (Drive) position and the vehicle speed is below approximately 6 mph (10 km/h), the MOD system detects moving objects in the front view.
- When the shift lever is in the R (Reverse) position and the vehicle speed is below approximately 6 mph (10 km/h), the MOD system detects moving objects in the rear view. The MOD system will not operate if the trunk is open.

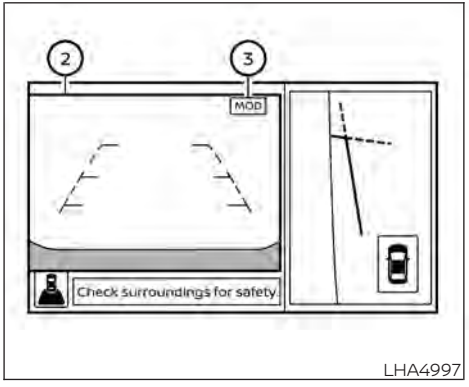

Rear and front-side views

The MOD system does not detect moving objects in the front-side view. The MOD icon is not displayed on the screen when in this view.

When the MOD system detects moving objects near the vehicle, a chime will be heard when in front or rear view and a yellow frame will be displayed on the view where the objects are detected. While the MOD system continues to detect moving objects, the yellow frame continues to be displayed.

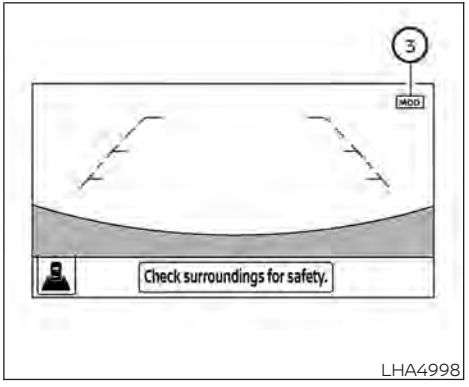

Full screen rear view

NOTE:

While the RCTA chime is beeping, the MOD system does not chime.

In the bird's-eye view, the yellow frame ① is displayed on each camera image (front, rear, right, left) depending on where moving objects are detected.

The yellow frame ② is displayed on each view in the front view and rear view modes.

A blue MOD icon ③ is displayed in the view where the MOD system is operative. A gray MOD icon is displayed in the view where the MOD system is not operative.

If the MOD system is turned off, the MOD icon ③ is not displayed.

TURNING MOD ON AND OFF (if so equipped)

Some vehicles include the option to allow the MOD system to be turned on or off.

To turn the MOD system on or off:

1. Touch the "Setting" key.
2. Touch the "Camera" key.
3. Touch the "Moving Object Detection" key to switch between ON or OFF.

MOD SYSTEM LIMITATIONS

⚠ WARNING

Listed below are the system limitations for MOD. Failure to operate the vehicle in accordance with these system limitations could result in serious injury or death.

- **Do not use the MOD system when towing a trailer. The system may not function properly.**
- **Excessive noise (for example, audio system volume or open vehicle window) will interfere with the chime sound, and it may not be heard.**
- **The MOD system performance will be limited according to environmental conditions and surrounding objects such as:**
  - **When there is low contrast between background and the moving objects.**
  - **When there is a blinking source of light.**
  - **When strong light such as another vehicle's headlight or sunlight is present.**
  - **When camera orientation is not in its usual position, such as when a mirror is folded.**
  - **When there is dirt, water drops or snow on the camera lens.**
  - **When the position of the moving objects in the display is not changed.**
- **The MOD system might detect flowing water droplets on the camera lens, white smoke from the muffler, moving shadows, etc.**
- **The MOD system may not function properly depending on the speed, direction, distance or shape of the moving objects.**
- **If your vehicle sustains damage to the parts where the camera is installed, leaving it misaligned or bent, the sensing zone may be altered and the MOD system may not detect objects properly.**
- **When the temperature is extremely high or low, the screen may not display objects clearly. This is not a malfunction.**

NOTE:
The blue MOD icon will change to orange if one of the following has occurred:

- **When the system is malfunctioning.**
- **When the component temperature reaches a high level (icon will blink).**
- **When the RearView camera has detected a blockage (icon will blink).**

If the icon light continues to illuminate orange, have the MOD system checked. It is recommended that you visit a NISSAN dealer for this service.

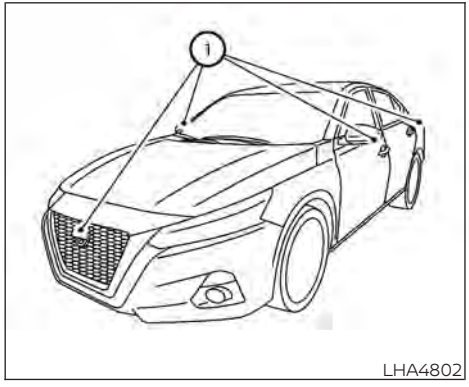

LHA4802

SYSTEM MAINTENANCE

⚠ CAUTION

- **Do not use alcohol, benzine or thinner to clean the camera. This will cause discoloration.**
- **Do not damage the camera as the monitor screen may be adversely affected.**

If dirt, rain or snow accumulates on any of the cameras ①, the MOD system may not operate properly. Clean the camera by wiping with a cloth dampened with a diluted mild cleaning agent and then wiping with a dry cloth.

VENTS

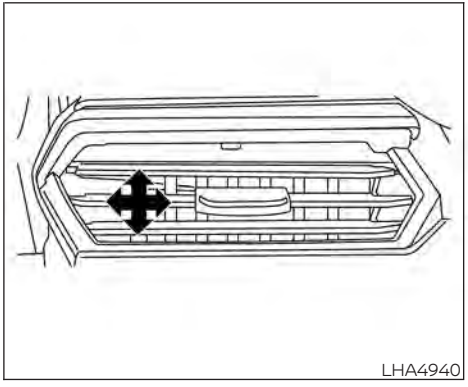

LHA4940

Side

Adjust air flow direction by moving the vent slides.

Open or close the vents by using the slide. Move the slide toward the ≋ to open the vents or toward the ⊠ to close them.

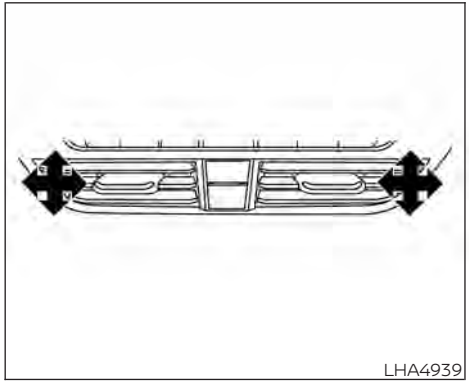

Center

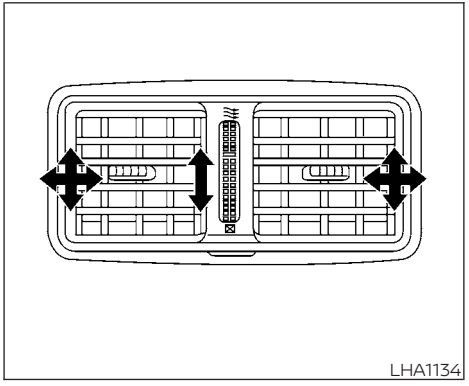

Rear (if so equipped)

HEATER AND AIR CONDITIONER (manual) (if so equipped)

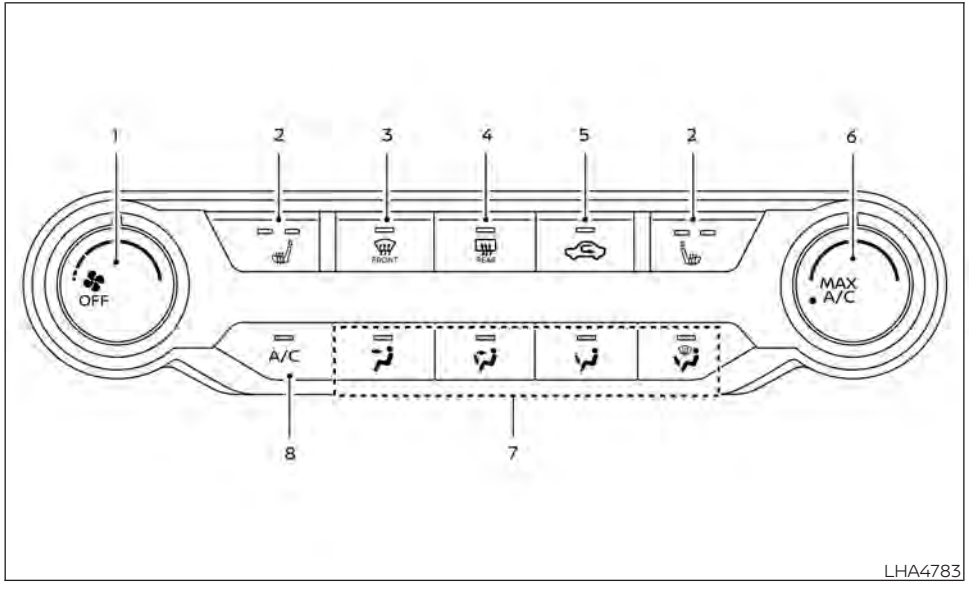

1. Fan speed control dial
2. Heated seat switches (if so equipped)
3. Front defroster button
4. Rear window and outside mirror (if so equipped) defroster switch
5. Air recirculation button
6. MAX A/C / temperature control dial
7. Air flow control buttons
8. A/C (air conditioner) button

WARNING

- **The air conditioner cooling function operates only when the engine is running.**
- **Do not leave children or adults who would normally require the assistance of others alone in your vehicle. Pets should also not be left alone. They could accidentally injure themselves or others through inadvertent operation of the vehicle. Also, on hot, sunny days, temperatures in a closed vehicle could quickly become high enough to cause severe or possibly fatal injuries to people or animals.**
- **Do not use the recirculation mode for long periods as it may cause the interior air to become stale and the windows to fog up.**

NOTE:

- **Odors from inside and outside the vehicle can build up in the air conditioner unit. Odor can enter the passenger compartment through the vents.**
- **When parking, set the heater and air conditioner controls to turn off air recirculation to allow fresh air into the passenger compartment. This should help reduce odors inside the vehicle.**

CONTROLS

Fan speed control dial

The fan speed control dial turns the fan on and off and controls fan speed.

Air flow control buttons

The air flow control buttons allow you to select the air flow outlets.

- — Air flows from center and side vents.
- — Air flows from center and side vents and foot outlets.
- — Air flows mainly from foot outlets.
- — Air flows from defroster outlets and foot outlets.
- — Air flows mainly from defroster outlets.

Temperature control dial

The temperature control dial allows you to adjust the temperature of the outlet air. To lower the temperature, turn the dial to the left. To increase the temperature, turn the dial to the right.

Turn the dial to the MAX A/C position for maximum cooling. Air will flow from center and side vents.

Air recirculation button

On position (Indicator light on):
Interior air is recirculated inside the vehicle.

Press the button to the on position when:

- driving on a dusty road.
- to prevent traffic fumes from entering passenger compartment.
- for maximum cooling when using the air conditioner.

Off position (Indicator light off):
Outside air is drawn into the passenger compartment and distributed through the selected outlet.

Use the off position for normal heater or air conditioner operation.

A/C (air conditioner) button

Start the engine, turn the fan speed control dial to the desired position and press the A/C button to turn on the air conditioner. To turn off the air conditioner, press the A/C button again.

The air conditioner cooling function operates only when the engine is running.

Rear window and outside mirror (if so equipped) defroster switch

For additional information, see "Rear window and outside mirror (if so equipped) defroster switch" (P. 2-56).

Heated seat switches (if so equipped)

For additional information, see "Heated seat switches" (P. 2-64).

HEATER OPERATION

Heating

This mode is used to direct heated air to the foot outlets. Some air also flows from the defrost outlets and the side vent outlets.

1. Press the button to the off position for normal heating.
2. Press the air flow control button.
3. Turn the fan speed control dial to the desired position.
4. Turn the temperature control dial to the desired position between the middle and the hot position.

Ventilation

This mode directs outside air to the side and center vents.

1. Press the button to the off position.
2. Press the air flow control button.
3. Turn the fan speed control dial to the desired position.
4. Turn the temperature control dial to the desired position.

Defrosting or defogging

This mode directs the air to the defrost outlets to defrost/defog the windows.

1. Press the defrost/defog button .
2. Turn the fan speed control dial to the desired position.
3. Turn the temperature control dial to the desired position between the middle and the hot position.

- To quickly remove ice or fog from the windows, turn the fan speed control dial to the highest setting and the temperature control to the full HOT position.
- When the position is selected, the air conditioner automatically turns on if the outside temperature is more than 36°F (2°C). This dehumidifies the air which helps defog the windshield. The mode automatically turns off, allowing outside air to be drawn into the passenger compartment to further improve the defogging performance. The recirculation mode cannot be activated in the position.

Bi-level heating

The bi-level mode directs warmed air to the side and center vents and to the front and rear floor outlets.

1. Press the button to the off position.
2. Press the air flow control button.
3. Turn the fan speed control dial to the desired position.
4. Turn the temperature control dial to the desired position.

Heating and defogging

This mode heats the interior and defogs the windshield.

1. Press the air flow control button.
2. Turn the fan speed control dial to the desired position.
3. Turn the temperature control dial to the desired position between the middle and the hot position.

- When the position is selected, the air conditioner automatically turns on if the outside temperature is more than 36°F (2°C). This dehumidifies the air which helps defog the windshield. The mode automatically turns off, allowing outside air to be drawn into the passenger compartment to further improve the defogging performance.

Operating tips

Clear snow and ice from the wiper blades and air inlet in front of the windshield. This improves heater operation.

AIR CONDITIONER OPERATION

Start the engine, turn the fan speed control dial to the desired position, and press the A/C button to activate the air conditioner. When the air conditioner is on, cooling and dehumidifying functions are added to the heater operation.

The air conditioner cooling function operates only when the engine is running.

Cooling

This mode is used to cool and dehumidify the air.

1. Press the button to the off position.
2. Press the air flow control button.
3. Turn the fan speed control dial to the desired position.
4. Press the A/C button. The indicator light comes on.
5. Turn the temperature control dial to the desired position.

- For quick cooling when the outside temperature is high, press the button to the ON position. Be sure to return the to the off position for normal cooling. MAX A/C may be used for quick cooling.

Dehumidified heating

This mode is used to heat and dehumidify the air.

1. Press the button to the off position.
2. Press the air flow control button.
3. Turn the fan speed control dial to the desired position.
4. Press the A/C (air conditioner) button. The indicator light comes on.
5. Turn the temperature control dial to the desired position.

Dehumidified defogging

This mode is used to defog the windows and dehumidify the air.

1. Press the air flow control button.
2. Turn the fan speed control dial to the desired position.

- When the or are selected, the air conditioner automatically turns on if the outside temperature is more than 36°F (2°C). This dehumidifies the air which helps defog the windshield. The mode automatically turns off, allowing outside air to be drawn into the passenger compartment to further improve the defogging performance.

3. Turn the temperature control dial to the desired position.

Operating tips

- Keep the windows closed while the air conditioner is in operation.
- After parking in the sun, drive for 2 or 3 minutes with the windows open to vent hot air from the passenger compartment. Then, close the windows. This allows the air conditioner to cool the interior more quickly.
- The air conditioning system should be operated for approximately 10 minutes at least once a month. This helps prevent damage to the system due to lack of lubrication.
- A visible mist may be seen coming from the ventilators in hot, humid conditions as the air is cooled rapidly. This does not indicate a malfunction.
- If the engine coolant temperature gauge indicates engine coolant temperature over the normal range, turn the air conditioner off. For additional information, see "If your vehicle overheats" (P. 6-19).
- When Remote Engine Start (if so equipped) is activated, the manual climate control system will default to the last used heating or cooling mode.

AIR FLOW CHARTS

The following charts show the button and dial positions for **MAXIMUM AND QUICK** heating, cooling or defrosting. **The air recirculation button should always be in the off position for heating and defrosting.**

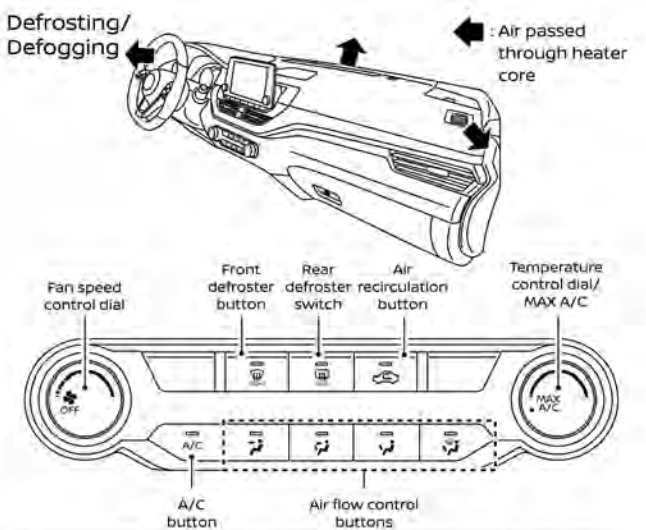

Fan control	Air recirculation control	A/C button	Temp. control	Air flow control
HI	OFF	Turns on automatically (indicator may or may not turn on)	HOT (RIGHT)	FRONT

LHA4786

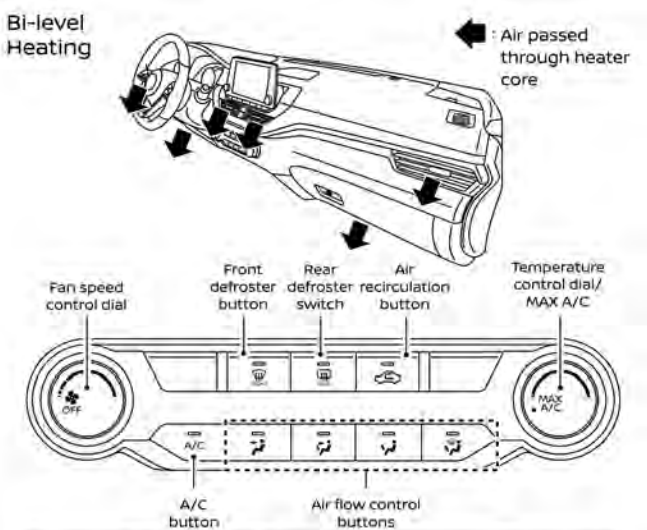

Fan control	Air recirculation control	A/C button	Temp. control	Air flow control
HI	OFF	OFF	HOT (RIGHT)	

LHA4787

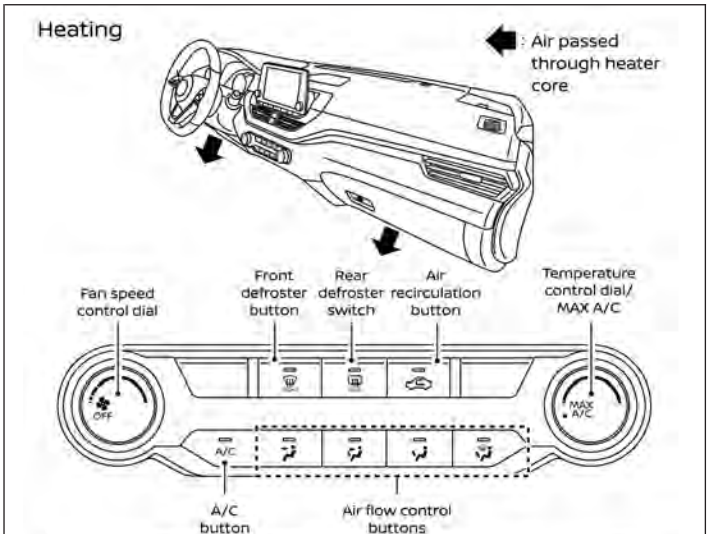

Fan control	Air recirculation control	A/C button	Temp. control	Air flow control
HI	OFF	OFF	HOT (RIGHT)	

LHA4788

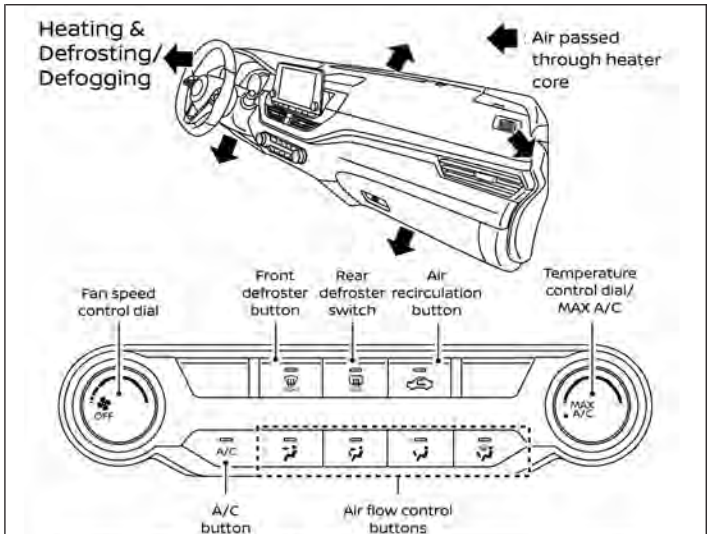

Fan control	Air recirculation control	A/C button	Temp. control	Air flow control
HI	OFF	Turns on automatically (indicator may or may not turn on)	HOT (RIGHT)	

LHA4789

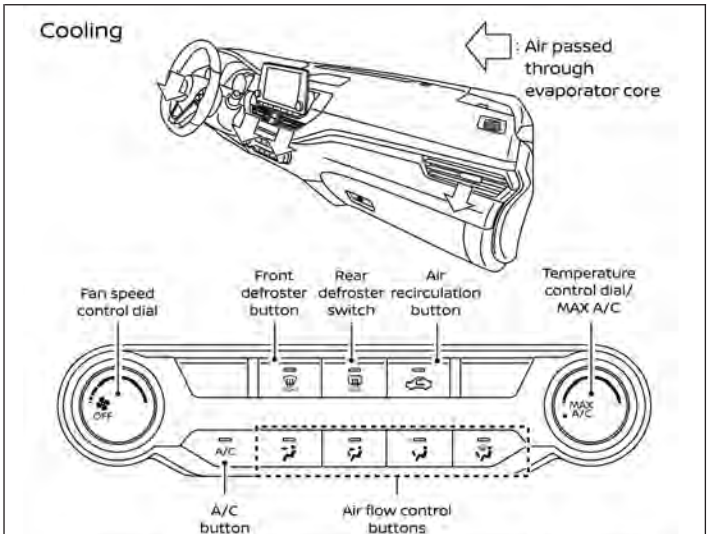

Fan control	Air recirculation control	A/C button	Temp. control	Air flow control
HI	ON	ON	MAX A/C	

LHA4790

HEATER AND AIR CONDITIONER (automatic) (if so equipped)

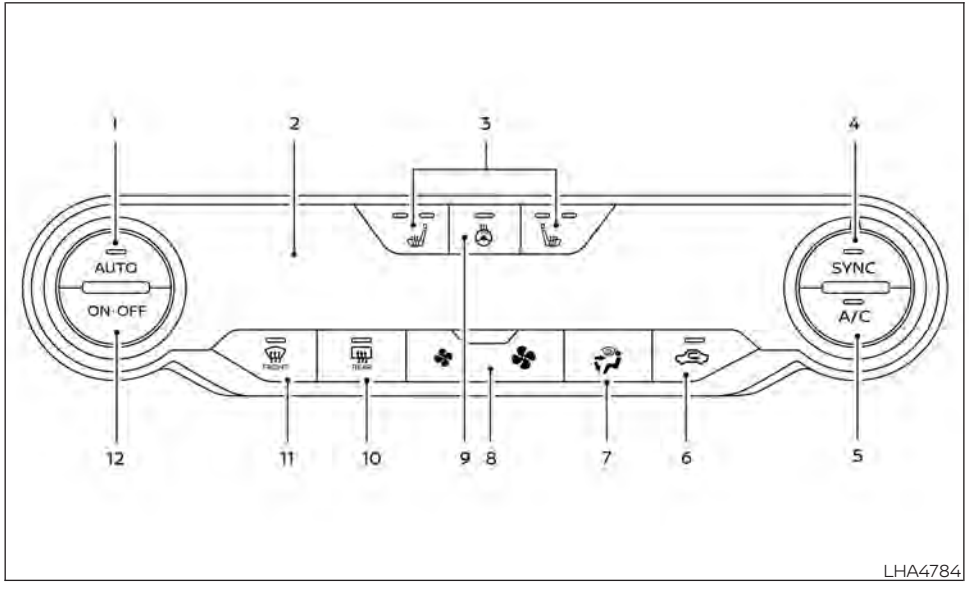

1. AUTO (automatic) climate control button / temperature control dial (drivers side)
2. Display screen
3. Heated seat switches
4. SYNC button / temperature control dial (passenger's side)
5. A/C (air conditioner) button
6. Air recirculation button
7. Air flow control button
8. Fan speed control buttons
9. Heated steering wheel switch
10. Rear window and outside mirror defroster switch
11. Front defroster button
12. ON-OFF button

WARNING

- **The air conditioner cooling function operates only when the engine is running.**
- **Do not leave children or adults who would normally require the assistance of others alone in your vehicle. Pets should also not be left alone. They could accidentally injure themselves or others through inadvertent operation of the vehicle. Also, on hot, sunny days, temperatures in a closed vehicle could quickly become high enough to cause severe or possibly fatal injuries to people or animals.**
- **Do not use the recirculation mode for long periods as it may cause the interior air to become stale and the windows to fog up.**

Start the engine and operate the controls to activate the air conditioner.

NOTE:

- **Odors from inside and outside the vehicle can build up in the air conditioner unit. Odor can enter the passenger compartment through the vents.**

- **When parking, set the heater and air conditioner controls to turn off air recirculation to allow fresh air into the passenger compartment. This should help reduce odors inside the vehicle.**

AUTOMATIC OPERATION

Cooling and/or dehumidified heating (AUTO)

This mode may be used all year round as the system automatically works to keep a constant temperature. Air flow distribution, air intake control, and fan speed are also controlled automatically.

1. Press the AUTO button on.
2. Turn the temperature control dial to the left or right to set the desired temperature.

- Adjust the temperature display to about 75°F (24°C) for normal operation.
- The temperature of the passenger compartment will be maintained automatically. Air flow distribution, air intake control and fan speed are also controlled automatically.
- A visible mist may be seen coming from the vents in hot, humid conditions as the air is cooled rapidly. This does not indicate a malfunction.

3. You can individually set driver's and front passenger's side temperature using each temperature control dial. To synchronize the driver's and front passenger's temperature settings, press the SYNC button.

Heating (A/C OFF)

The air conditioner does not activate. When you need to heat only, use this mode.

1. Press the AUTO button.
2. Turn the temperature control dial to set the desired temperature.

- The temperature of the passenger compartment will be maintained automatically. Air flow distribution and fan speed are also controlled automatically.
- Do not set the temperature lower than the outside air temperature. Otherwise, the system may not work properly.
- Not recommended if windows fog up.

Dehumidified defrosting or defogging

1. Press the FRONT front defroster button on.
2. Turn the temperature control dial to set the desired temperature.

- To quickly remove ice from the outside of the windows, use the fan speed control buttons to set the fan speed to maximum.
- As soon as possible after the windshield is clean, press the AUTO button to return to the automatic mode.
- When the FRONT front defroster button is pressed, the air conditioner will automatically be turned on at outside temperatures above 36°F (2°C). The air recirculate mode automatically turns off, allowing outside air to be drawn into the passenger compartment to further improve the defogging performance.

Remote Engine Start with Intelligent Climate Control (if so equipped)

Vehicles equipped with automatic climate controls and Remote Engine Start function may go into automatic heating or cooling

mode when Remote Engine Start is activated depending on outside and cabin temperatures. During this period, the climate control display and buttons will be inoperable until the ignition switch is turned on. In Remote Engine Start defrosting mode, the rear window defroster, heated seats (if so equipped) and heated steering wheel (if so equipped) may be activated automatically.

MANUAL OPERATION

Fan speed control buttons

Press the fan speed control buttons to manually control the fan speed.

Press the AUTO button to return to automatic control of the fan speed.

Temperature control dial

The temperature control dial allows you to adjust the temperature of the outlet air. To lower the temperature, turn the dial to the left. To increase the temperature, turn the dial to the right. Temperature can be adjusted on the driver's and passenger's side.

Air recirculation

Press the air recirculation button to recirculate interior air inside the vehicle. The indicator light on the button will come on.

The air recirculation cannot be activated when the air conditioner is in the front defrosting mode.

When the outside temperature exceeds 70°F (21°C), the air conditioning system may default to air recirculation mode automatically to reduce overall power consumption. To exit air recirculation mode, deselect the air recirculation button (indicator light will turn off) to enter fresh air mode.

Automatic intake air control

In the AUTO mode, the intake air will be controlled automatically. To manually control the intake air, press the air recirculation button. To return to the automatic control mode, press and hold the air recirculation button for about 2 seconds. The indicator light will flash twice, and then the intake air will be controlled automatically.

A/C (air conditioner) button

Start the engine, press the fan speed control buttons to the desired position and press the A/C button to turn on the air conditioner. To turn off the air conditioner, press the A/C button again.

The air conditioner cooling function operates only when the engine is running.

Air flow control

Pressing the button manually controls air flow and selects the air outlet:

- — Air flows from center and side vents.
- — Air flows from center and side vents and foot outlets.
- — Air flows mainly from the foot outlets.
- — Air flows from defroster and foot outlets.

Synchronize climate settings

Press the SYNC button to synchronize climate settings. The sync indicator will turn on.

Pressing SYNC will synchronize driver's and front passenger's climate settings.

To change climate settings when SYNC is active (the SYNC indicator is on):

- The driver's side temperature control dial will control the driver and front passenger temperatures.
- The fan speed control dial will control the fan speeds.

To exit SYNC:

- To remove the front passenger from SYNC, turn the passenger's side temperature control dial.
- Pressing SYNC multiple times will reactivate SYNC.

To turn system off

Press the ON-OFF button.

Rear window and outside mirror defroster switch

For additional information, see "Rear window and outside mirror (if so equipped) defroster switch" (P. 2-56).

Heated seat switches

For additional information, see "Heated seat switches" (P. 2-64).

Heated steering wheel switch

For additional information, see "Heated steering wheel switch" (P. 2-65).

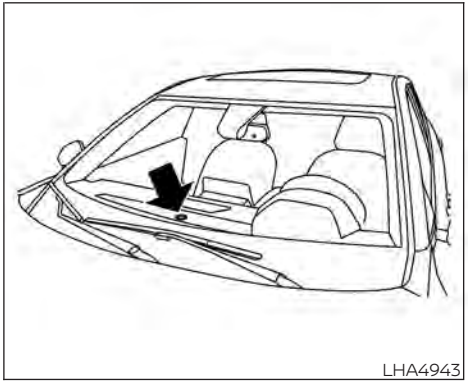

OPERATING TIPS

The sunload sensor, located on the top center of the instrument panel, helps the system maintain a constant temperature. Do not put anything on or around this sensor.

- When the climate system is in automatic operation and the engine coolant temperature and outside air temperature are low, the air flow outlet may default to defroster mode for a maximum of 2 minutes 30 seconds. This is not a malfunction. After the engine coolant temperature warms up, the air flow outlet will return to foot mode and operation will continue normally.
- When the outside and interior cabin temperatures are moderate to high, the intake setting may default to turn off air recirculation to allow fresh air into the passenger compartment. You may notice air flow from the foot mode, bi-level mode, or side demist vent outlets for a maximum of 15 seconds. This may occur when the previous climate setting was turned off. This is not a malfunction. After the initial warm air is expelled, the intake will return to automatic control, the air flow outlet will return to previous settings, and operation will continue normally. To exit, press any climate control button.
- Keep the moonroof (if so equipped) closed while the air conditioner is in operation.
- If you feel that the air flow mode you have selected and the outlets the air is coming out do not match, select the FRONT mode.
- When you change the air flow mode, you may feel air flow from the foot outlets for just a moment. This is not a malfunction.

SERVICING AIR CONDITIONER

The air conditioner system in your NISSAN vehicle is charged with a refrigerant designed with the environment in mind.

This refrigerant does not harm the earth's ozone layer.

Special charging equipment and lubricant is required when servicing your NISSAN air conditioner. Using improper refrigerants or lubricants will cause severe damage to your air conditioner system. For additional information, see "Air conditioner system refrigerant and oil recommendations" (P. 10-8).

It is recommended that you visit a NISSAN dealer to service your "environmentally friendly" air conditioner system.

⚠ WARNING

The air conditioner system contains refrigerant under high pressure. To avoid personal injury, any air conditioner service should be done only by an experienced technician with proper equipment.

RADIO

Place the ignition switch in the ACC or ON position and press the PUSH ⏻ button to turn the radio on. If you listen to the radio with the engine not running, the ignition switch should be placed in the ACC position.

Radio reception is affected by station signal strength, distance from radio transmitter, buildings, bridges, mountains and other external influences. Intermittent changes in reception quality normally are caused by these external influences.

Using a cellular phone in or near the vehicle may influence radio reception quality.

Radio reception

Your NISSAN radio system is equipped with state-of-the-art electronic circuits to enhance radio reception. These circuits are designed to extend reception range, and to enhance the quality of that reception.

However, there are some general characteristics of both FM and AM radio signals that can affect radio reception quality in a moving vehicle, even when the finest equipment is used. These characteristics are completely normal in a given reception area and do not indicate any malfunction in your NISSAN radio system.

Reception conditions will constantly change because of vehicle movement. Buildings, terrain, signal distance and interference from other vehicles can work against ideal reception. Described below are some of the factors that can affect your radio reception.

Some cellular phones or other devices may cause interference or a buzzing noise to come from the audio system speakers. Storing the device in a different location may reduce or eliminate the noise.

FM RADIO RECEPTION

Range: FM range is normally limited to 25 – 30 mi (40 – 48 km), with monaural (single channel) FM having slightly more range than stereo FM. External influences may sometimes interfere with FM station reception even if the FM station is within 25 mi (40 km). The strength of the FM signal is directly related to the distance between the transmitter and receiver. FM signals follow a line-of-sight path, exhibiting many of the same characteristics as light. For example, they will reflect off objects.

Fade and drift: As your vehicle moves away from a station transmitter, the signals will tend to fade and/or drift.

Static and flutter: During signal interference from buildings, large hills or due to antenna position (usually in conjunction with increased distance from the station transmitter), static or flutter can be heard. This can be reduced by adjusting the treble control to reduce treble response.

Multipath reception: Because of the reflective characteristics of FM signals, direct and reflected signals reach the receiver at the same time. The signals may cancel each other, resulting in momentary flutter or loss of sound.

AM RADIO RECEPTION

AM signals, because of their low frequency, can bend around objects and skip along the ground. In addition, the signals can be bounced off the ionosphere and bent back to earth. Because of these characteristics, AM signals are also subject to interference as they travel from transmitter to receiver.

Fading: Occurs while the vehicle is passing through freeway underpasses or in areas with many tall buildings. It can also occur

for several seconds during ionospheric turbulence even in areas where no obstacles exist.

Static: Caused by thunderstorms, electrical power lines, electric signs and even traffic lights.

AUDIO OPERATION PRECAUTIONS

MP3 or WMA terms

- MP3 — MP3 is short for Moving Pictures Experts Group Audio Layer 3. MP3 is the most well-known compressed digital audio file format. This format allows for near "CD quality" sound, but at a fraction of the size of normal audio files. MP3 conversion of an audio track from CD-ROM can reduce the file size by approximately a 10:1 ratio with virtually no perceptible loss in quality. MP3 compression removes the redundant and irrelevant parts of a sound signal that the human ear doesn't hear.
- WMA — Windows Media Audio (WMA)* is a compressed audio format created by Microsoft as an alternative to MP3. The WMA codec offers greater file compression than the MP3 codec, enabling storage of more digital audio tracks in the same amount of space when compared to MP3s at the same level of quality.
- Bit rate — Bit rate denotes the number of bits per second used by a digital music file. The size and quality of a compressed digital audio file is determined by the bit rate used when encoding the file.
- Sampling frequency — Sampling frequency is the rate at which the samples of a signal are converted from analog to digital (A/D conversion) per second.
- Multisession — Multisession is one of the methods for writing data to media. Writing data once to the media is called a single session, and writing more than once is called a multisession.
- ID3/WMA Tag — The ID3/WMA tag is the part of the encoded MP3 or WMA file that contains information about the digital music file such as song title, artist, encoding bit rate, track time duration, etc. ID3 tag information is displayed on the Artist/song title line on the display.

* Windows® and Windows Media® are registered trademarks and trademarks in the United States of America and other countries of Microsoft Corporation of the USA.

USB (Universal Serial Bus) Connection Port

⚠ WARNING

- **Do not connect, disconnect or operate the USB device while driving. Doing so can be a distraction. If distracted you could lose control of your vehicle and cause an accident or serious injury.**

⚠ CAUTION

- **Do not force the USB device into the USB port. Inserting the USB device tilted or up-side-down into the port may damage the port. Make sure that the USB device is connected correctly into the USB port.**
- **Do not grab the USB port cover (if so equipped) when pulling the USB device out of the port. This could damage the port and the cover.**
- **Do not leave the USB cable in a place where it can be pulled unintentionally. Pulling the cable may damage the port.**

The vehicle is not equipped with a USB device. USB devices should be purchased separately as necessary.

This system cannot be used to format USB devices. To format a USB device, use a personal computer.

In some jurisdictions, the USB device for the front seats plays only sound without images for regulatory reasons, even when the vehicle is parked.

This system supports various USB memory devices, USB hard drives and iPod® players. Some USB devices may not be supported by this system.

- Partitioned USB devices may not play correctly.
- Some characters used in other languages (Chinese, Japanese, etc.) may not appear properly in the display. Using English language characters with a USB device is recommended.

General notes for USB use:

- For additional information, refer to your device manufacturer's owner information regarding the proper use and care of the device.

Notes for iPod® use:

iPod® is a trademark of Apple Inc., registered in the U.S. and other countries.

- Improperly plugging in the iPod® may cause a checkmark to be displayed on and off (flickering). Always make sure that the iPod® is connected properly.
- An iPod® nano (1st Generation) may remain in fast forward or rewind mode if it is connected during a seek operation. In this case, please manually reset the iPod®.
- An iPod® nano (2nd Generation) will continue to fast-forward or rewind if it is disconnected during a seek operation.
- An incorrect song title may appear when the Play Mode is changed while using an iPod® nano (2nd Generation).
- Audiobooks may not play in the same order as they appear on an iPod®.
- Large video files cause slow responses in an iPod®. The vehicle center display may momentarily black out, but will soon recover.
- If an iPod® automatically selects large video files while in the shuffle mode, the vehicle center display may momentarily black out, but will soon recover.

iPod®* player

- Some characters used in other languages (Chinese, Japanese, etc.) are not displayed properly on the vehicle center screen. We recommend using English or Spanish language characters with an iPod®.
- Large video podcast files cause slow responses in the iPod®. The vehicle center display may momentarily black out, but it will soon recover.
- If the iPod® automatically selects large video podcast files while in the shuffle mode, the vehicle center display may momentarily black out, but it will soon recover.
- Improperly plugging in the iPod® may cause a checkmark to be displayed on and off (flickering). Always make sure that the iPod® is connected properly.
- The iPod® nano (2nd Generation) will continue to fast forward or rewind if it is disconnected during a seek operation.
- An incorrect song title may appear when the Play Mode is changed while using the iPod® nano (2nd Generation).
- Audiobooks may not play in the same order as they appear on the iPod®.

- The iPod® nano (1st Generation) may remain in fast forward or rewind mode if it is connected during a seek operation. In this case, please manually reset the iPod®.
- If you are using an iPod® (3rd Generation with Dock connector), do not use very long names for the song title, album name or artist name to prevent the iPod® from resetting itself.
- Be careful not to do the following, or the cable could be damaged and a loss of function may occur:
  - Bend the cable excessively (1.6 in (40 mm) radius maximum).
  - Twist the cable excessively (more than 180 degrees).
  - Pull or drop the cable.
  - Do not force the iPod® cable connector into the device port.
  - Close the center console lid on the cable or connectors.
  - Store objects with sharp edges in the storage where the cable is stored.
  - Spill liquids on the cable and connectors.
- Do not connect the cable to the iPod® if the cable and/or connectors are wet. It may damage the iPod®.
- If the cable and connectors are exposed to water, allow the cable and/or connectors to dry completely before connecting the cable to the iPod® (wait 24 hours for it to dry).
- If the connector is exposed to fluids other than water, evaporative residue may cause a short between the connector pins. In this case, replace the cable, otherwise damage to the iPod® and a loss of function may occur.
- If the cable is damaged (insulation cut, connectors cracked, contamination such as liquids, dust, dirt, etc. in the connectors), do not use the cable. It is recommended that you visit a NISSAN dealer to replace the cable with a new one.
- When not in use for extended periods of time, store the cable in a clean, dust free environment at room temperature and without direct sun exposure.
- Do not use the cable for any other purposes other than its intended use in the vehicle.

*iPod® is a trademark of Apple Inc., registered in the U.S. and other countries.

Bluetooth® streaming audio

- Some Bluetooth® audio devices may not be recognized by the in-vehicle audio system.
- It is necessary to set up the wireless connection between a compatible Bluetooth® audio device and the in-vehicle Bluetooth® module before using the Bluetooth® audio.
- Operating procedure of the Bluetooth® audio will vary depending on the devices. Make sure how to operate your audio device before using it with this system.
- The Bluetooth® audio may be stopped under the following conditions:
  - Receiving a call on the Bluetooth® Hands-Free Phone System.
  - Checking the connection to the hands-free phone.
- Do not place the Bluetooth® audio device in an area surrounded by metal or far away from the in-vehicle Bluetooth® module to prevent tone quality degradation and wireless connection disruption.
- While an audio device is connected through the Bluetooth® wireless connection, the battery power of the device may discharge quicker than usual.

- This system supports the Bluetooth® Audio Distribution Profile (A2DP, AVRCP).

BLUETOOTH® is a trademark owned by Bluetooth SIG, Inc. and licensed to Panasonic.

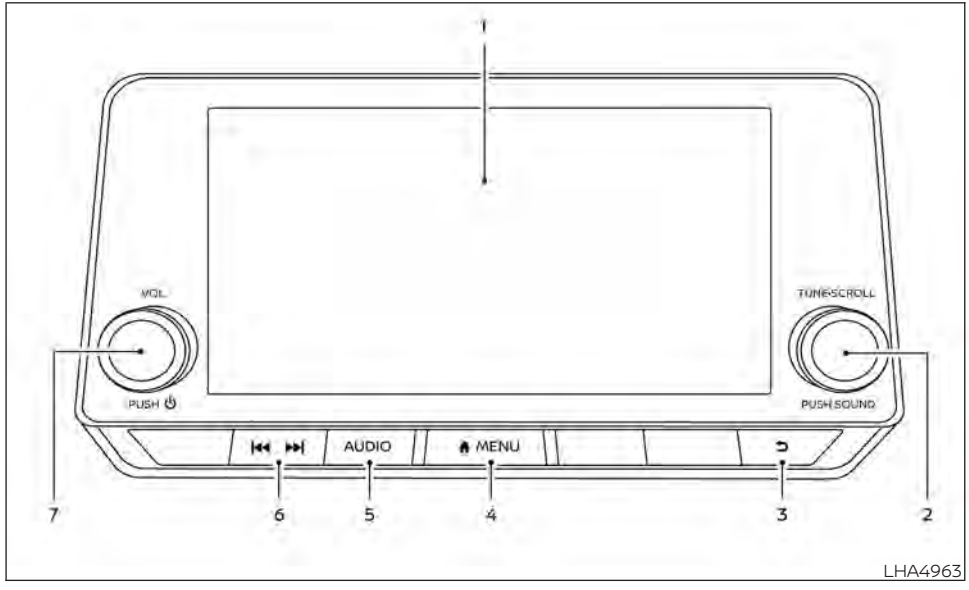

FM/AM RADIO

1. Display screen
2. PUSH SOUND button / TUNE·SCROLL knob
3. BACK button
4. MENU button
5. AUDIO button
6. ⏮ / ⏭ (SEEK/TRACK) buttons
7. VOL (volume) knob / PUSH ⏻ (power) button

For additional information, see "Audio operation precautions" (P. 4-46) regarding all operation precautions in this section.

Audio main operation

VOL (volume) knob / PUSH ⏻ (power) button

Place the ignition switch in the ON position and press the PUSH ⏻ (power) button while the system is off to call up the mode (radio, AUX, Bluetooth® audio, USB or iPod®) that was playing immediately before the system was turned off.

To turn the system off, press the PUSH ⏻ (power) button.

Turn the VOL (volume) knob to adjust the volume.

This vehicle may be equipped with Speed Sensitive Volume. When this feature is active, the audio volume changes as the driving speed changes.

MENU button

Press the MENU button to show the Menu screen. Touch the "Settings" key on the display, then touch the "Sound" key.

Sound Settings		
	Bass	Adjusts the bass to the desired level.
	Treble	Adjusts the treble to the desired level.
	Balance	Adjusts the balance to the desired level. Balance adjusts the sound level between the left and right speakers.
	Fade	Adjusts the fade to the desired level. Fade adjusts the sound level between the front and rear speakers.
	Speed Sensitive Volume	Adjusts the speed sensitive volume function, which increases the volume of the audio system as the speed of the vehicle increases. Set to "OFF" to disable the feature. The higher the setting, the more the volume increases in relation to vehicle speed.

Bass, treble, balance, fade and Speed Sensitive Volume can be adjusted by touching "-"/"+" , "L"/"R", or "R"/"F" keys.

Audio button

Press to display the audio screen. When this button is pressed while the audio screen is not displayed, the last audio source played will play.

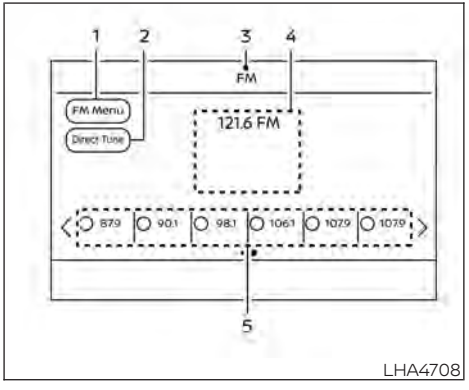

AM/FM radio screen

1. "AM Menu" / "FM Menu" key
   Touch to display the radio menu screen.
2. "Direct Tune" (if so equipped)
   Touch to manually enter a station.
3. Audio source indicator
   Indicates the currently selected audio source.
4. Reception information display
   Reception information currently available such as frequency, station name, etc. is displayed.
5. Preset list
   To listen to a preset station, touch the corresponding station from the preset list. If displayed, touch the "**<**" or "**>**" keys to scroll the preset list.

AM radio operation

Press the MENU button and touch the "AM" key or press the AUDIO button and select AM on the bottom of the Launch Bar to bring up the AM display screen.

If another audio source is playing when the "AM" key is pressed, the audio source playing will automatically be turned off and the last radio station played will begin playing.

AM Menu

Touch the "AM Menu" key to display the AM Menu screen options:

- SCAN: To scan the stations, touch the "AM Menu" key on the radio screen and then touch the "SCAN" key. The stations will be tuned from low to high frequencies and stop at each broadcasting station for several seconds. Touching the "SCAN" key again during this period of several seconds will stop tuning and the radio will remain tuned to that station.

- Refresh: Touch the "Refresh" key to scan and update the station list displayed on the right side of the AM Menu screen.

⏮ ⏭ (SEEK/TRACK) buttons

Press the ⏮ or ⏭ buttons to tune from low to high or high to low frequencies and to stop at the next broadcasting station.

1 to 6 Station memory operations

Up to six stations can be registered in the preset list.

1. Select the AM radio band.
2. Tune to the station you wish to store.
3. Touch and hold one of the preset numbers in the preset list.

The information such as frequency will be displayed on the preset list.

To select and listen to the preset stations, push ⬍ on the steering wheel briefly or touch a preferred station on the preset list on the radio screen.

FM radio operation

Press the MENU button and touch the "FM Menu" key or press the AUDIO button and select FM on the bottom of the Launch Bar to bring up the FM display screen.

If another audio source is playing when the "FM" key is pressed, the audio source playing will automatically be turned off and the last radio station played will begin playing.

The FM stereo indicator (STEREO) is shown on the screen during FM stereo reception. When the stereo broadcast signal is weak, the radio automatically changes from stereo to monaural reception.

FM Menu

Touch the "FM" Menu key to display the FM Menu screen options:

- SCAN: To scan tune the stations, touch the "FM Menu" key on the radio screen and then touch the "SCAN" key. The stations will be tuned from low to high frequencies and stop at each broadcasting stations for several seconds. Touching the "SCAN" key again during this period of several seconds will stop tuning and the radio will remain tuned to that station.
- Refresh: Touch the "Refresh" key to update the station list displayed on the right side of the FM Menu screen.
- RDS Info: Radio station and song information can be displayed on the FM display screen.

⏮ ⏭ (SEEK/TRACK) buttons

Press the ⏮ or ⏭ buttons to tune from low to high or high to low frequencies and to stop at the next broadcasting station.

1 to 12 Station memory operations

Up to 12 stations can be registered in the preset list.

1. Select the FM radio band.
2. Tune to the station you wish to store.
3. Touch and hold one of the preset numbers in the preset list.

The information such as frequency will be displayed on the preset list.

To select and listen to the preset stations, push ⬍ on the steering wheel briefly or touch a preferred station on the preset list on the radio screen.

Auxiliary (AUX) devices operation

Connecting auxiliary devices

Connect an AUX device into the AUX input jack located on the center console below the heater and air conditioner controls.

The AUX input jack accepts any standard analog audio input such as from a portable cassette player, CD player, MP3 player or phone.

Insert a 1/8 in (3.5 mm) stereo mini plug in the audio input jack. If a cable with a mono plug is used, the audio output may not function normally.

Activation and playing

Turn on the AUX device. Connect an AUX cable to the AUX device and the AUX input jack. Select AUX mode from the audio source menu screen or by pressing the Source button on the steering wheel.

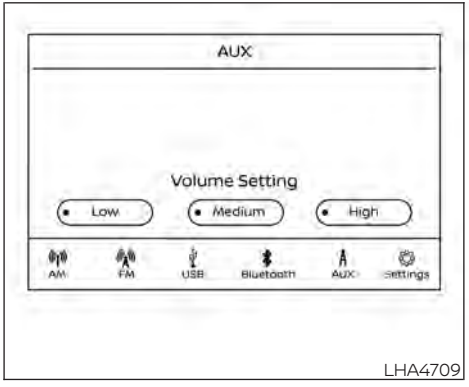

AUX screen

- Audio source indicator
  Indicates that the AUX source is currently playing.
- "Volume Setting" keys
  Touch one of the keys to select the sound output gain from Low, Medium and High.
- AUX from Launch Bar
  Touch to change from another source to AUX.

Additional features

For additional information, see "USB (Universal Serial Bus) Connection Port" (P. 4-54) in this section regarding the USB connection port available with this system.

For additional information, see "iPod® player operation" (P. 4-57) in this section regarding the iPod® player available with this system.

For additional information, see "Bluetooth® streaming audio" (P. 4-60) in this section about the Bluetooth® audio interface available with this system.

Microsoft (WMA) Obligation of Labeling

Additional Obligation of Labeling

This product is protected by certain intellectual property rights of Microsoft Corporation and third parties. Use or distribution of such technology outside of this product is prohibited without a license from Microsoft or an authorized Microsoft subsidiary and third parties.

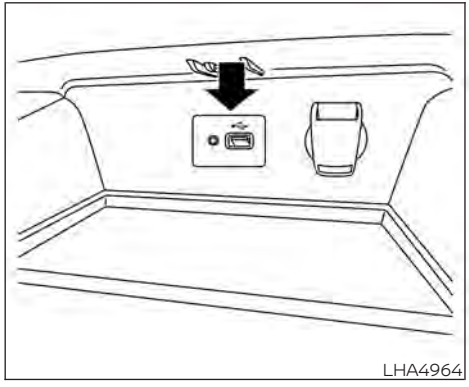

USB (Universal Serial Bus) CONNECTION PORT

Connecting a device to the USB Connection Port

⚠ WARNING

Do not connect, disconnect, or operate the USB device while driving. Doing so can be a distraction. If distracted you could lose control of your vehicle and cause an accident or serious injury.

⚠ CAUTION

- **To avoid damage and loss of function when using a USB device, note the following precautions.**
- **Do not force the USB device into the USB port. Inserting the USB device tilted or up-side-down into the port may damage the port. Make sure that the USB device is connected correctly into the USB port.**
- **Do not grab the USB port cover (if so equipped) when pulling the USB device out of the port. This could damage the port and the cover.**
- **Do not leave the USB cable in a place where it can be pulled unintentionally. Pulling the cable may damage the port.**

For additional information, refer to your device manufacturer's owner information regarding the proper use and care of the device.

The USB port is located beneath the heater and air conditioner controls. Insert the USB device into the connection port.

When a compatible storage device is plugged into the connection port, compatible audio files on the storage device can be played through the vehicle's audio system.

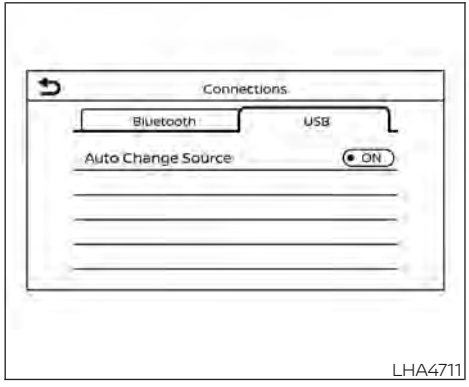

LHA4711

USB connections screen

Press the MENU button and touch the "Connections" key or press the "Settings" key and touch the "Connections" key to change USB settings.

- Auto Change Source
  Touch "ON" or "OFF" to change the audio source settings for USB memory devices or an iPod® connected through a USB cable.

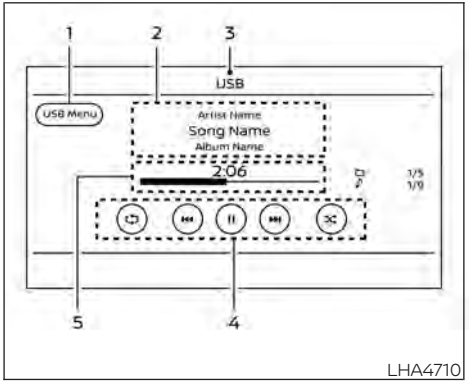

LHA4710

USB screen

1. "USB Menu" key
   Touch to switch to the USB Menu screen.
2. Track information
   Track information such as the song name, artist name and album name are displayed.
3. Audio source indicator
   Indicates the currently selected audio source.
4. USB operation keys
   Touch to control USB playback functions
5. Play time and progress bar
   The play time of the track is displayed. The bar indicates the progress in playing a track.

USB operation keys

Touch to control USB playback functions.

Keys	Description
	Each time " " key is touched, the repeat mode changes.
	Touch to return to the beginning of the current track. Touch again to select the previous track. Touch and hold to rewind the current track.
▶	Touch to play the track.
❚❚	Touch to pause the track.
	Touch to select the next track. Touch and hold to fast-forward the track.
	Each time " " key is touched, the random mode changes.

USB memory device player operation

Activation and playing

Connecting the USB memory device into the port will start playing the USB memory.

USB memory device can also be played by touching the "USB" key on the Menu screen or by touching USB on the Launch Bar.

To pause playing the USB memory device touch the " ⏸ " key. To resume playing, touch the " ▶ " key.

Skipping tracks

To skip the tracks, press the ⏮ or ⏭ buttons on the control panel or touch the " ⏮ " or " ⏭ " keys on the screen repeatedly until the preferred track is selected.

NOTE:

Depending on the condition, skipping to the previous track may require pressing the button or touching the key twice. Pressing the button or touching the key once may only restart the current track from the beginning.

Fast-forwarding/rewinding

To rewind or fast-forward the track, press and hold the ⏮ or ⏭ buttons on the control panel or touch and hold the " ⏮ " or " ⏭ " keys on the screen.

Changing play mode

Repeat mode

Touch the " 🔁 " key on the USB screen to change the repeat mode.
The following modes are available:

All: Repeat all

1 Folder: Repeat folder/sub-folder

1 Track: Repeat track

Random mode

Touch the " 🔀 " key on the screen to change the random mode as follows:

No text displayed: Random off

All: Repeat all

1 Folder: Repeat folder/sub-folder

USB menu

Touch the "USB Menu" key on the USB screen to display the USB Menu screen.

"Now Playing" key	Touch to display the USB screen.
"Folder List" key	Touch to display the folder list. Touch an item on the list to select the folder. The sub-folder or track list will be displayed. Select a sub-folder or track from the list.
"Album Artwork"	Touch to run on/off the album artwork display on the USB screen.

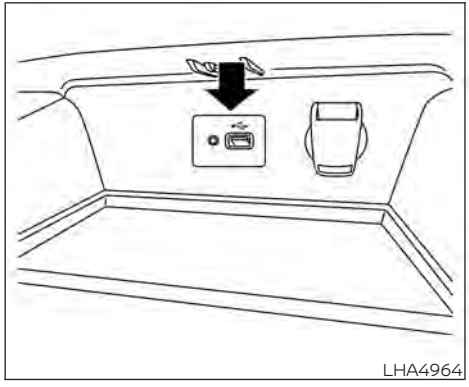

iPod®* PLAYER OPERATION

Connecting iPod®

⚠ WARNING

Do not connect, disconnect, or operate the USB device while driving. Doing so can be a distraction. If distracted you could lose control of your vehicle and cause an accident or serious injury.

⚠ CAUTION

- **Do not force the USB device into the USB port. Inserting the USB device tilted or up-side-down into the port may damage the port. Make sure that the USB device is connected correctly into the USB port.**
- **Do not grab the USB port cover (if so equipped) when pulling the USB device out of the port. This could damage the port and the cover.**
- **Do not leave the USB cable in a place where it can be pulled unintentionally. Pulling the cable may damage the port.**

For additional information, refer to your device manufacturer's owner information regarding the proper use and care of the device.

To connect an iPod® to the vehicle so that the iPod® can be controlled with the audio system controls and display screen, use the USB connection port located beneath the heater and air conditioner controls. Connect the iPod®-specific end of the cable to the iPod® and the USB end of the cable to the USB connection port on the vehicle. If your iPod® supports charging via a USB connection, its battery will be charged while connected to the vehicle with the ignition switch in the ON position.

While connected to the vehicle, the iPod® can only be operated by the vehicle audio controls.

To disconnect the iPod® from the vehicle, remove the USB end of the cable from the USB connection port on the vehicle, then remove the cable from the iPod®.

* iPod® is a trademark of Apple Inc., registered in the U.S. and other countries.

Compatibility

The following models are compatible:

- iPod® Classic 5th generation (firmware version 1.3.0 or later)
- iPod® Classic 6th generation (firmware version 2.0.1 or later)
- iPod® Classic 7th generation (firmware version 2.0.4 or later)
- iPod® Touch 2nd generation (firmware version 4.2.1 or later)*
- iPod® Touch 3rd generation (firmware version 5.1 or later)
- iPod® Touch 4th generation (firmware version 5.1 or later)
- iPod® nano - 1st generation (firmware version 1.3.1 or later)

- iPod® nano - 2nd generation (firmware version 1.1.3 or later)
- iPod® nano - 3rd generation (firmware version 1.1.3 or later)
- iPod® nano - 4th generation (firmware version 1.0.4 or later)
- iPod® nano - 5th generation (firmware version 1.0.2 or later)
- iPod® nano - 6th generation (firmware version 1.1 or later)
- iPhone® 3G (firmware version 4.2.1 or later)
- iPhone® 3GS (firmware version 5.1 or later)
- iPhone® 4 (firmware version 5.1 or later)
- iPhone® 4S (firmware version 5.1 or later)

* Some features of this iPod® may not be fully functional.

Make sure that your iPod® firmware is updated to the version indicated above.

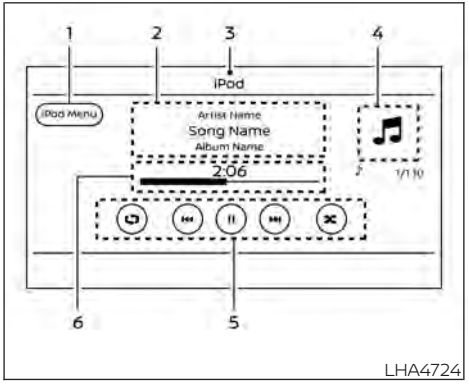

iPod screen

1. "iPod Menu" key
   Touch to switch to the iPod Menu screen.
2. Track information
   Track information such as the song name, artist name and album name are displayed.
3. Audio source indicator
   Indicates the currently selected audio source.
4. Album artwork
   An image of the album artwork is displayed when available if the setting is turned on.
5. iPod® operation keys
   Touch to control iPod® playback functions
6. Play time and progress bar
   The play time of the track is displayed. The bar indicates the progress in playing a track.

iPod® operation keys

Touch to control iPod® playback functions.

Keys	Description
	Each time " " key is touched, the repeat mode changes.
	Touch to return to the beginning of the current track. Touch again to select the previous track. Touch and hold to rewind the current track.
▶	Touch to play the track.
⏸	Touch to pause the track.
	Touch to select the next track. Touch and hold to fast-forward the track.
	Each time " " key is touched, the random mode changes.

iPod® memory device player operation

Activation and playing

Connecting the iPod® to the vehicle via USB cable will activate the iPod® mode.

The iPod® can also be played by touching the "iPod" key on the Menu screen or by touching iPod on the Launch Bar.

Skipping tracks

To skip the tracks, press the ⏮ or ⏭ buttons on the control panel or touch the " ⏮ " or " ⏭ " keys on the screen repeatedly until the preferred track is selected.

NOTE:

Depending on the condition, skipping to the previous track may require pressing the button or touching the key twice. Pressing the button or touching the key once may only restart the current track from the beginning.

Fast-forwarding/rewinding

To rewind or fast-forward the track, press and hold the ⏮ or ⏭ buttons on the control panel or touch and hold the " ⏮ " or " ⏭ " keys on the screen,

Changing play mode

Repeat mode

Touch the " 🔁 " key on the iPod® screen to change the repeat mode. The following modes are available.

No text displayed: Repeat off

All: Repeat all

One: Repeat track

Random mode

Touch the " 🔀 " key on the screen to change the random mode as follows.

" 🔀 " is not highlighted: Random off

" 🔀 " highlighted: Random on

iPod® Menu

Touch the "iPod Menu" key on the iPod® screen to display the iPod® Menu screen.

"Now Playing" key	Touch to display the USB screen.
"Folder List" key (if so equipped)	Touch to display the folder list. Touch an item on the list to select the folder. The sub-folder or track list will be displayed. Select a sub-folder or track from the list.
"Album Artwork" key	Touch to run on/off the album artwork display on the USB screen.
"Playlists" key	Touch to display the list according to the selected item.
"Artists" key	
"Albums" key	
"Songs" key	
"Podcasts" key	
"Genres" key	
"Composers" key	
"Audiobooks" key	
"iTunes Radio" key	

BLUETOOTH® STREAMING AUDIO

If you have a compatible Bluetooth® audio device that is capable of playing audio files, the device can be connected to the vehicle's audio system so that the audio files on the device play through the vehicle's speakers. For additional information, see "FM/AM radio" (P. 4-49).

NOTE:

For additional information, refer to the cellular phone owner's manual.

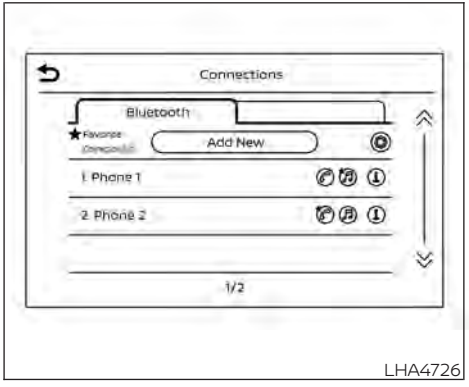

LHA4726

Connecting procedure

NOTE:

The connecting procedure must be performed when the vehicle is stationary. If the vehicle starts moving during the procedure, the procedure will be canceled.

To connect a phone to the Bluetooth® Hands-Free Phone System:

Manual Connecting Procedure

1. Press the MENU button on the control panel.
2. Touch the "Connections" key on the screen.
3. In the Bluetooth tab, touch the "Add New" key to connect a phone.
4. When a compatible phone is found a message with a PIN appears on the screen.
5. Verify the PIN is correct and accept the connection.

Menu Item		Result
Bluetooth		Allows user to switch Bluetooth® on and off. Bluetooth® must be turned on in order to connect a device.
	ON	Turns Bluetooth® functionality on. To turn off, touch the "ON" key again. The indicator light will go off.
Favorite (Connection first)		Allows user to toggle "Phone" and "Audio" favorite settings on and off.
PIN		Allows user to customize the PIN to a four digit number.

Automatic Connecting Procedure

If no phone is connected to the system, press and hold the button on the steering wheel for less than 1.5 seconds. After the prompt, speak "Add Phone", the system will announce "transferring to the add phone settings menu". The system will start the pairing procedure. When a compatible phone is found, a message with a PIN appears on the screen. Operate the Bluetooth® phone to complete the connection process. For additional information, see "Bluetooth® connections screen" (P. 4-81).

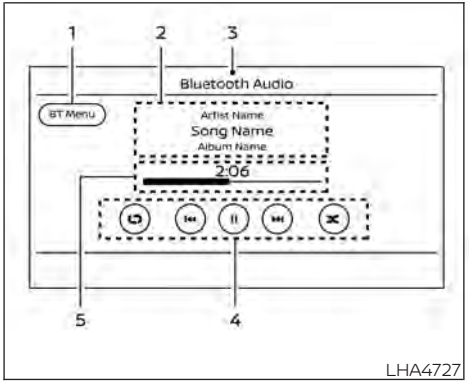

Bluetooth® screen

1. "BT Menu" key
   Depending on the Bluetooth® version supported by the connected device, either the "BT Menu" key or "Connections" key is displayed.
2. Track information
   Track information such as the song name, artist name and album name are displayed.
3. Audio source indicator
   Indicates the currently selected audio source.
4. Bluetooth® audio operation keys
   Touch to control Bluetooth® audio playback functions
5. Play time and progress bar
   The play time of the track is displayed. The bar indicates the progress in playing a track.

Bluetooth® operation keys

Touch to control Bluetooth® playback functions.

Keys	Description
	Each time " " key is touched, the repeat mode changes.
	Touch to return to the beginning of the current track. Touch again to select the previous track. Touch and hold to rewind the current track.
▶	Touch to play the track.
⏸	Touch to pause the track.
	Touch to select the next track. Touch and hold to fast-forward the track.
	Each time " " key is touched, the random mode changes.

Bluetooth® audio operation

The ability to pause, change tracks, fast forward, rewind, randomize and repeat music may be different between devices. Some or all of these functions may not be supported on each device.

NOTE:

Depending on the Bluetooth® audio device that is connected, it may not be possible to perform audio operations or a delay may occur before music is played back.

Activation and playing

A Bluetooth® audio device can be played by touching the "Bluetooth" key on the Menu screen or by touching Bluetooth on the Launch Bar.

To pause playing the Bluetooth® audio, touch the " ⏸ " key. Touch the " ▶ " key to resume playing.

Changing folders

To change folders, touch the "BT Menu" key.

Fast-forwarding/rewinding

To fast-forward or rewind the track, press and hold the ⏮ or ⏭ buttons on the control panel or touch the " ⏮ " or " ⏭ " keys on the screen.

Changing play mode

Repeat mode

Touch the " 🔁 " key on the screen to change the repeat mode.

Random mode

Touch the " 🔀 " key on the screen to change the random mode.

NOTE:

Available repeat/random modes change depending on the connected device.

BT Menu

Touch the "BT Menu" key on the Bluetooth® audio screen to display the Bluetooth® audio menu screen.

The following items are available.

"Now Playing" key	Touch to display the Bluetooth® audio screen.
"Current List" key (if so equipped)*	A list of track in the currently selected folder is displayed.
"Connections" key	Touch to display the connections screen.
"Folder List" key*	Touch to display the folder list. Touch an item on the list to select the folder.

*: displayed only when available.

NOTE:

Depending on the connected device, the "BT Menu" key may not be displayed.

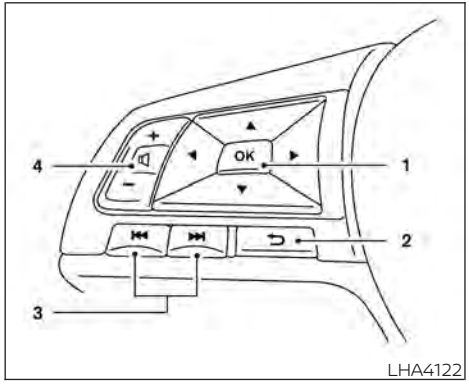

STEERING WHEEL SWITCH FOR AUDIO CONTROL

1. ◀ ▶ Menu control switch/ OK button
2. ⮌ (back) switch
3. ⏮ ⏭ (SEEK/TRACK) buttons
4. Volume control switch

Volume control switch

Push the volume control switch up or down to increase or decrease the volume.

◀ ▶ Menu control switch/OK button

In the vehicle information display, navigate to "Audio". Use the OK button to change the mode in the following sequence:

AM → FM → USB/iPod®*→ Bluetooth® Audio* → AUX* → AM.

* These modes are only available when compatible media storage is inserted into the device or connected to the system.

⏮ ⏭ SEEK/TRACK buttons

For most audio sources, pushing the tuning switches for more than 1.5 seconds provides a different function than pushing for less than 1.5 seconds.

AM and FM:

- Press the ⏮ or ⏭ buttons for less than 1.5 seconds to increase or decrease the preset station.
- Press the ⏮ or ⏭ buttons for more than 1.5 seconds to seek up or down to the next station.

iPod®:

- Press the ⏮ or ⏭ buttons for less than 1.5 seconds to increase or decrease the track number.

USB:

- Press the ⏮ or ⏭ buttons for less than 1.5 seconds to increase or decrease the track number.
- Press the ⏮ or ⏭ buttons for more than 1.5 seconds to reverse or fast forward the current song.

Bluetooth® Audio:

- Press the ⏮ or ⏭ buttons for less than 1.5 seconds to skip ahead or back to the next song.
- Press the ⏮ or ⏭ buttons for more than 1.5 seconds to reverse or fast forward the current song.

⮌ (back) switch

Push the ⮌ (back) switch to return to the previous screen or cancel the current selection.

ANTENNA

The antenna pattern is printed inside the rear window.

⚠ CAUTION

- **Do not place metalized film near the rear window glass or attach any metal parts to it. This may cause poor reception or noise**
- **When cleaning the inside of the rear window, be careful not to scratch or damage the rear window antenna. Lightly wipe along the antenna with a dampened soft cloth.**

SIRI® EYES FREE (if so equipped)

Apple Siri® Eyes Free personal assistant can be accessed from the vehicle. Siri Eyes Free can be accessed in Siri Eyes Free mode to reduce user distraction. In this mode, Siri Eyes Free is available for interaction by voice control. After connecting a compatible Apple device by using Bluetooth®, Siri Eyes Free can be activated from the button on the steering wheel.

Siri® is a trademark of Apple Inc., registered in the U.S. and other countries.

- Some Siri Eyes Free functions, such as displaying pictures or opening apps, may not be available while driving.
- For getting best results, always update your device to the latest software version.
- Keep the interior of the vehicle as quiet as possible. Close the windows to eliminate the surrounding noises (traffic noises, vibration sounds, etc.), which may prevent the system from recognizing the voice commands correctly.
- For functions that can be used in Siri Eyes Free, please refer to the Apple website.

REQUIREMENTS

Siri® is only available on the iPhone® 4S or later. Devices released before iPhone® 4S are not supported by the Siri® Eyes Free system. Visit www.apple.com/ios/siri for details about device compatibility.

Siri must be enabled on the phone. Please check phone settings.

If the device has a lock screen, Siri must be accessible from the lock screen. Please check phone settings.

For best results, always update your device to the latest software version.

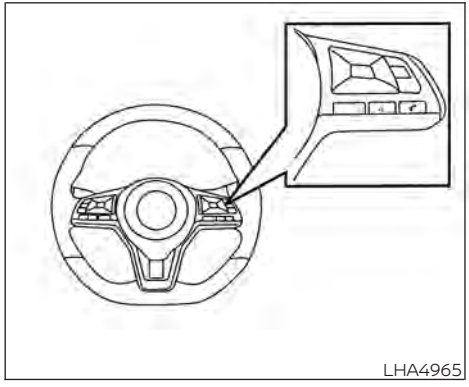

OPERATING SIRI® EYES FREE

1. Press button for more than 1.5 seconds.
2. Speak your command and then listen to the Siri® Eyes Free reply.

After starting Siri Eyes Free, press the button again within 5 seconds of the end of the Siri Eyes Free announcement to extend the session.

Example 1 – Playing music

1. Press button for more than 1.5 seconds.
2. Say "Play (artist name, song name, etc.)".
3. Your vehicle will automatically change to Bluetooth® Audio or iPod® mode* when the music starts playing. Mode selection is determined by the phone.

* If the iPhone® is also connected with the USB cable.

If the audio track does not start playing automatically after Siri Eyes Free ends, try changing the track or audio source to resume playback.

NOTE:

For best results, use the native music app. Performance of music control function while using Podcasts, Audiobook or other 3rd party music apps may vary and is controlled by the iPhone®.

Example 2 – Replying to text messages

1. If a compatible iPhone® is connected and "Show Notifications" of the iPhone® settings is enabled, the vehicle will display a notification for new incoming text messages.
2. After reading the message, press or press and hold the button to reply using Siri Eyes Free.
3. After a beep sounds, say "Text message" or a similar command to reply using Siri Eyes Free.

TROUBLESHOOTING GUIDE

Symptom	Cause and Countermeasure
Cannot access Siri Eyes Free from switch on the steering wheel	Check if a Bluetooth® connection is established between the iPhone® and the system.
	Check if Siri is enabled on the device. On your phone, go to Siri setting.
	Check that Siri can be accessed from the device lock screen. This can be set in the settings menu of your phone.
Audio Source does not change automatically to iPod® or Bluetooth® Audio mode	For best results, use the native Music app. Performance of music control function while using Podcasts, Audiobook or other 3rd party music apps may vary.
	For best results, play media already stored on your device. Streaming music or playback from cloud storage may degrade performance.
	Switch the source manually by pressing the AUX or MEDIA button on the vehicle audio system or the SOURCE select switch on the steering wheel.
Play, pause, next track, previous track or play timer does not work	For best results, use the native Music app. Performance of music control function while using Podcasts, Audiobook or other 3rd party music apps may vary and is controlled by the device.
Cannot hear any music/ audio being played back from a connected iPhone®	Check that the audio source is set to Bluetooth® Audio or iPod® mode. A USB connection is required for iPod® mode.
Cannot receive text message notifications on the vehicle audio system	Check if "Send Notifications" is enabled on your phone. On the phone, go to Bluetooth® settings. Find the device name, like "My Car". Press the INFO button. Turn on "Show Notifications".
Cannot reply to text message notifications by Siri Eyes Free	After receiving an incoming text message, follow on-screen guidance. Press the button for more than 1.5 seconds on the steering wheel for Siri Eyes Free. After Siri Eyes Free starts, say "Text Message".

CAR PHONE OR CB RADIO

When installing a CB, ham radio or car phone in your vehicle, be sure to observe the following precautions; otherwise, the new equipment may adversely affect the engine control system and other electronic parts.

⚠ WARNING

- **A cellular phone should not be used for any purpose while driving so full attention may be given to vehicle operation. Some jurisdictions prohibit the use of cellular phones while driving.**
- **If you must make a call while your vehicle is in motion, the hands free cellular phone operational mode is highly recommended. Exercise extreme caution at all times so full attention may be given to vehicle operation.**
- **If you are unable to devote full attention to vehicle operation while talking on the phone, pull off the road to a safe location and stop your vehicle.**

⚠ CAUTION

- **Keep the antenna as far away as possible from the electronic control modules.**
- **Keep the antenna wire more than 8 in (20 cm) away from the electronic control system harnesses. Do not route the antenna wire next to any harness.**
- **Adjust the antenna standing-wave ratio as recommended by the manufacturer.**
- **Connect the ground wire from the CB radio chassis to the body.**
- **For additional information, it is recommended that you visit a NISSAN dealer for servicing.**

BLUETOOTH® HANDS-FREE PHONE SYSTEM

⚠ WARNING

- **Use a phone after stopping your vehicle in a safe location. If you have to use a phone while driving, exercise extreme caution at all times so full attention may be given to vehicle operation.**
- **If you are unable to devote full attention to vehicle operation while talking on the phone, pull off the road to a safe location and stop your vehicle.**

⚠ CAUTION

To avoid discharging the vehicle battery, use a phone after starting the engine.

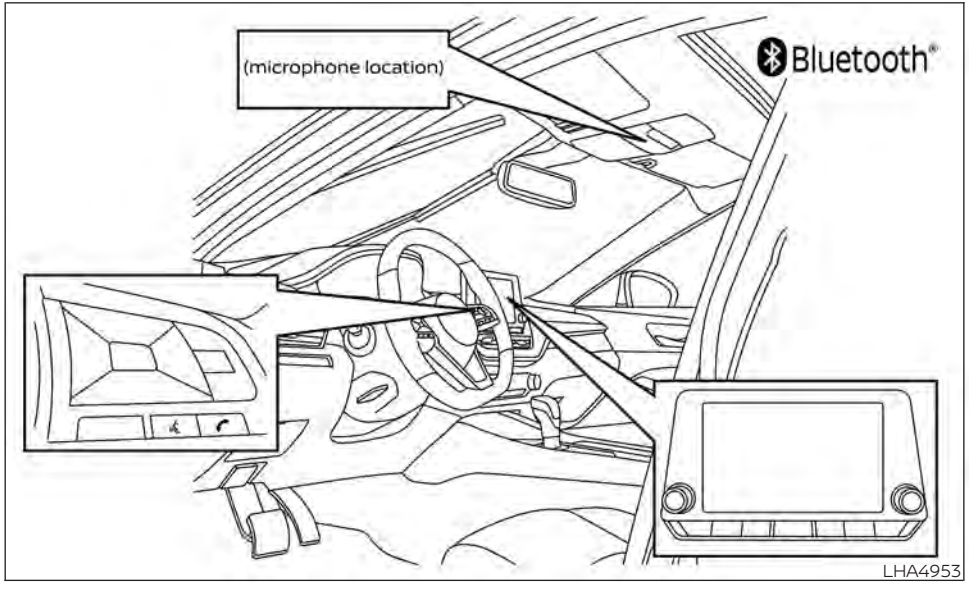

Your NISSAN is equipped with the Bluetooth® Hands-Free Phone System. If you have a compatible Bluetooth® enabled cellular phone, you can set up the wireless connection between your cellular phone and the in-vehicle phone module. With Bluetooth® wireless technology, you can make or receive a hands-free telephone call with your cellular phone in the vehicle.

Once your cellular phone is connected to the in-vehicle phone module, no other phone connecting procedure is required. Your phone is automatically connected with the in-vehicle phone module when the ignition switch is placed in the ACC or ON position with the previously connected cellular phone turned on and carried in the vehicle.

NOTE:

Some devices require the user to accept connections to other Bluetooth® devices. If your phone does not connect automatically to the system, consult the phone's owner's manual for details on device operation.

You can connect up to six different Bluetooth® cellular phones to the in-vehicle phone module. However, you can talk on only one cellular phone at a time.

Before using the Bluetooth® Hands-Free Phone System, refer to the following notes.

- Set up the wireless connection between a compatible cellular phone and the in-vehicle phone module before using the hands-free phone system.
- Some Bluetooth® enabled cellular phones may not be recognized or work properly. Please visit www.nissanusa.com/bluetooth or www.nissan.ca/bluetooth for a recommended phone list and connecting instructions.

- You will not be able to use a hands-free phone under the following conditions:
  - Your vehicle is outside of the cellular service area.
  - Your vehicle is in an area where it is difficult to receive a cellular signal; such as in a tunnel, in an underground parking garage, near a tall building or in a mountainous area.
  - Your cellular phone is locked to prevent it from being dialed.
- When the radio wave condition is not ideal or ambient sound is too loud, it may be difficult to hear the other person's voice during a call.
- Do not place the cellular phone in an area surrounded by metal or far away from the in-vehicle phone module to prevent tone quality degradation and wireless connection disruption.
- While a cellular phone is connected through the Bluetooth® wireless connection, the battery power of the cellular phone may discharge quicker than usual. The Bluetooth® Hands-Free Phone System cannot charge cellular phones.
- Some cellular phones or other devices may cause interference or a buzzing noise to come from the audio system speakers. Storing the device in a different location may reduce or eliminate the noise.
- For additional information, refer to the cellular phone owner's manual regarding the telephone charges, cellular phone antenna and body, etc.

REGULATORY INFORMATION

FCC Regulatory information

- CAUTION: To maintain compliance with FCC's RF exposure guidelines, use only the supplied antenna. Unauthorized antenna, modification, or attachments could damage the transmitter and may violate FCC regulations.
- Operation is subject to the following two conditions:
  1) This device may not cause interference and
  2) this device must accept any interference, including interference that may cause undesired operation of the device.

IC Regulatory information

- Operation is subject to the following two conditions: (1) this device may not cause interference, and (2) this device must accept any interference, including interference that may cause undesired operation of the device.
- This Class B digital apparatus meets all requirements of the Canadian Interference-Causing Equipment Regulations.

BLUETOOTH® is a trademark owned by Bluetooth SIG, Inc. and licensed to Panasonic.

USING THE SYSTEM

The system allows hands-free operation of the Bluetooth® Hands-Free Phone System.

If the vehicle is in motion, some commands may not be available so full attention may be given to vehicle operation.

Initialization

When the ignition switch is placed in the ON position, NISSAN Voice Recognition is initialized, which takes a few seconds. If the button is pressed before the initialization completes, the system will announce "There is no phone connected" and will not react to voice commands.

Operating tips

To get the best performance out of the NISSAN Voice Recognition System, observe the following:

- Keep the interior of the vehicle as quiet as possible. Keep all vents pointed away from the microphone and close the windows to eliminate surrounding noises (traffic noises, vibration sounds, etc.), which may prevent the system from recognizing voice commands correctly.
- Wait until the tone sounds before speaking a command. Otherwise, the command will not be received properly.
- Start speaking a command within 5 seconds after the tone sounds.
- Speak in a natural voice without pausing between words.
- For calling contacts by name, please say both the first and last name of the contact for better recognition.

Giving voice commands

To operate NISSAN Voice Recognition, press the button located on the steering wheel for less than 1.5 seconds. After the tone sounds, speak a command.

The command given is picked up by the microphone, and voice feedback is given when the command is accepted.

- If a command is not recognized, the system announces, "Please say or select a command from the displayed list." Make sure the command is said exactly as prompted by the system and repeat the command in a clear voice.
- If you want to go back to the previous command, you can say "Go back" or "Correction" any time the system is waiting for a response.
- You can cancel a command when the system is waiting for a response by saying, "Cancel" or "Quit." The system announces "Exit" and ends the Voice Recognition session. You can also press and hold the button on the steering wheel for 1.5 seconds at any time to end the Voice Recognition session. Whenever the Voice Recognition session is canceled, a double beep is played to indicate you have exited the system.
- If you want to adjust the volume of the voice feedback, push the (+ or -) volume control switches on the steering wheel while being provided with feedback. You can also use the radio volume control knob.

Voice Prompt Interrupt

In most cases you can interrupt the voice feedback to speak the next command by pressing the button on the steering wheel. After interrupting the system, wait for a beep before speaking your command.

One Shot Call (if so equipped)

To use the system faster, you may speak the second level commands with the main menu command on the main menu. For example, press the button and after the tone say, "Call Redial".

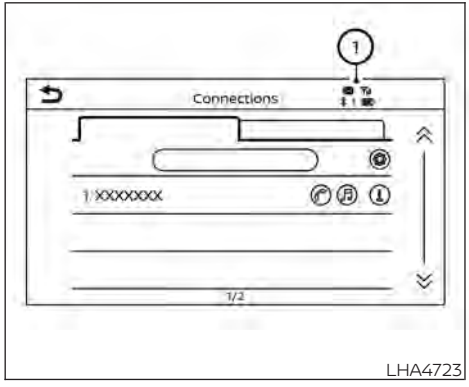

LHA4723

INDICATORS

When a cellular phone is connected through the Bluetooth® wireless connection, indicators ① for the phone and text messaging are displayed on the top of the screen.

Indicator	Description
✉	Indicates there are unread received messages.
ᛒ 1	Indicates the Bluetooth® device that is currently connected.
	Indicates the strength of the signal the Bluetooth® device is receiving.
	Indicates the amount of remaining Bluetooth® device battery.

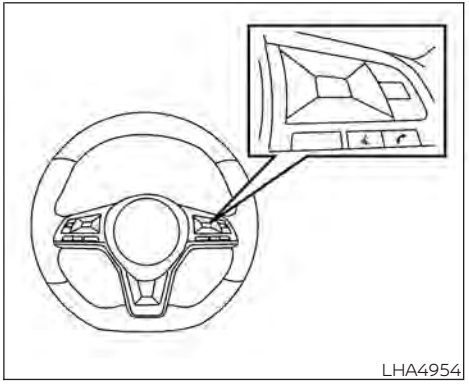
LHA4954

CONTROL BUTTONS

The control buttons for the Bluetooth® Hands-Free Phone System are located on the steering wheel.

VOICE COMMAND BUTTON
Press and hold the button for more than 1.5 seconds to initiate the Voice Recognition session. To exit the Voice Recognition session press and hold the for more than 1.5 seconds. For additional information, see "Voice prompt interrupt" (P. 4-70).

You can use the button to interrupt the system feedback and give a command at once.

If an iPhone® is connected, Siri® can be accessed by pressing the button for less than 1.5 seconds. For additional information, see "Siri® Eyes Free" (P. 4-64).

PHONE BUTTON
To answer an incoming call or to end a call press the button.

To reject a call press and hold the button.

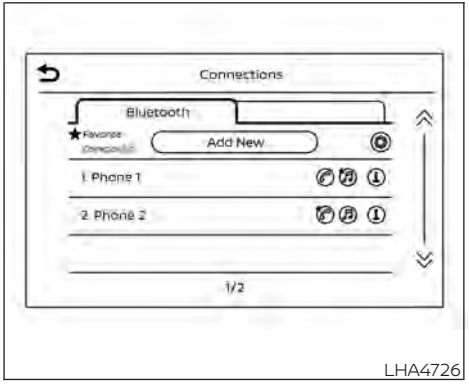

LHA4726

BLUETOOTH® CONNECTING PROCEDURE

NOTE:

The connecting procedure must be performed when the vehicle is stationary. If the vehicle starts moving during the procedure, the procedure will be canceled.

To connect a phone to the Bluetooth® Hands-Free Phone System:

Bluetooth® Connecting Procedure

1. Select the "Settings" key on the Launch Bar.
2. Touch the "Connections" key.
3. Touch the Bluetooth tab and touch the "Add New" key.
4. Follow the instructions on the screen.

If a PIN appears on the screen, operate the Bluetooth® device to enter/confirm the PIN.

Menu Item		Result
Bluetooth		Allows user to switch Bluetooth® on and off. Bluetooth® must be turned on in order to connect a device.
	ON	Turns Bluetooth® functionality on. To turn off, touch the "ON" key again. The indicator light will go off.
Favorite (Connection first)		Allows user to toggle "Phone" and "Audio" favorite settings on and off.
PIN		Allows user to customize the PIN to a four digit number.

NOTE:

Some cellular phones may require you to accept certain permissions in order to enable features on your Bluetooth® system. During the Bluetooth® pairing process, please check your cellular phone's display for a pop-up with the request to grant phonebook access.
Granting phonebook access permission will allow your contacts to be downloaded to the vehicle's Bluetooth® system. A pop-up may display on your cellular phone stating that the Bluetooth® system would like to access your contacts and call history. Please select "Allow" or Yes" to grant this permission.

Automatic Connecting Procedure

If no phone is connected to the system, press and hold the button on the steering wheel for less than 1.5 seconds. After the prompt, speak "Add Phone", the system will announce "transferring to the add phone settings menu". The system will start the pairing procedure. When a compatible phone is found, a message with a PIN appears on the screen. Operate the Bluetooth® phone to complete the connection process. For additional information, see "Bluetooth® connections screen" (P. 4-81).

VOICE COMMANDS

Voice commands can be used to operate the Bluetooth® Hands-Free Phone System. Press and hold the button for less than 1.5 seconds to bring up the phone command menu. The commands available are:

- Call <name>
- Dial <number>
- Recent Calls
- Read/Send Text (if so equipped)
- Siri® (if so equipped)
- Voice Assistant (if so equipped)
- Phonebook
- Quick Dial
- Redial
- Select Phone
- Add Phone
- Call <name> Mobile
- Call <name> Home
- Call <name> Office
- Call <name> Main
- Call <name> Other
- Settings

"Call <name>"

Speak this command to make a call to a contact that is stored in the phonebook. Say "Call" followed by a phonebook name to initiate a call. If the system does not recognize the name it will display a list of similar names. After the prompt, speak or touch an item number from the displayed list to place the call.

"Dial <number>"

Speak this command to make a call with a spoken phone number. After the prompt, say "Dial" followed by a 7 to 10 digit phone number. The system will repeat the number back. Say "Dial" to initiate the call or "Correction" to re-enter the phone number.

"Recent Calls"

The following commands are available under "Recent Calls":

- Incoming Calls
  Speak this command to list the last 20 incoming calls to the vehicle. If the call is from an entry in the phonebook, the name will be displayed. Otherwise, the phone number of the incoming call will be displayed.
  When prompted, speak or touch the item number on the screen to place the call. Touch the "Next" key to move through the list of incoming calls.
- Outgoing Calls
  Speak this command to list the last 20 outgoing calls from the vehicle. If the call was to an entry in the phonebook, the name will be displayed. Otherwise, the phone number of the outgoing call will be displayed.
  When prompted, speak or touch the item number on the screen to place the call. Touch the "Next" key to move through the list of outgoing calls.
- Missed Calls
  Speak this command to list the last 20 missed calls to the vehicle. If the call is from an entry in the phonebook, the name will be displayed. Otherwise, the phone number of the missed call will be displayed.
  When prompted, speak or touch the item number on the screen to place the call. Touch the "Next" key to move through the list of missed calls.

"Read Text/Send Text" (if so equipped)

Speak this command to access text messaging functions.

For additional information, see "Text messaging" (P. 4-77).

"Phonebook through voice command"

Speak "Phonebook" to view a list of quick steps to access entries stored in the phonebook. Commands are organized by the phone number type selected in the cellular device. For additional information, refer to the cellular phone's owner's manual.

The following commands are available:

- <Say a Contact Name>
- <Say a Contact Name> Main
- <Say a Contact Name> Home
- <Say a Contact Name> Mobile
- <Say a Contact Name> Office
- <Say a Contact Name> Other

For additional information on manually selecting phonebook entries, see "Making a call" (P. 4-76).

"Quick dial"

Speak this command to access the Quick dial menu. After the prompt, speak or select an item number on the displayed list to place the call. For additional information, see "Making a call" (P. 4-76).

"Redial"

Speak this command to call the last number dialed. After the prompt, say "Redial" to dial the number of the last outgoing call. The system will display "Redialing <name/number>". The name of the phonebook entry will be displayed if it is available, otherwise the number being redialed will be displayed.

"Select Phone"

Speak this command to access the Connections menu. For additional information, see "Bluetooth® connections screen" (P. 4-81).

"Add Phone"

Speak this command to access the Connections menu. For additional information, see "Bluetooth® connections screen" (P. 4-81).

"Settings"

Speak this command to access the System Voice settings menu. The system will exit Voice Recognition mode. Touch one of the following options on the screen to change the settings.

- Beep Only for Opening Prompt
  By touching the "ON" key, the indicator light will illuminate, the system voice will turn off and only a tone will sound when the Bluetooth® Hands-Free Phone System is activated. To turn the system voice back on, touch the "ON" key again, the indicator light will turn off.
- Best Match List
  When the system doesn't recognize a phonebook name or dial number, it will provide a list of similar sounding results. To turn this off, touch the "ON" key, the indicator light will turn off. To turn on, touch the "ON" key again, the indicator light will turn on.

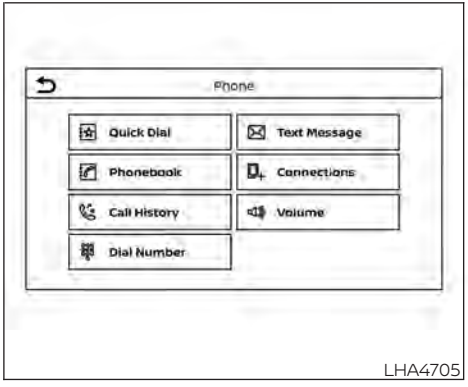

LHA4705

PHONE DISPLAY SCREEN

The Phone screen can be displayed by pressing the button on the control panel.

The following options are displayed:

- Quick Dial
  Displays the Quick Dial screen. For additional information, see "Quick dial" (P. 4-74)
- Phonebook
  Displays the Phonebook screen. For additional information, see "Making a call" (P. 4-76).

- Call History
  Displays the Call History screen. For additional information, see "Making a call" (P. 4-76).
- Dial Number
  Displays the Dial Number screen. For additional information, see "Making a call" (P. 4-76).
- Text Message
  Displays the received message screen. For additional information, see "Text messaging" (P. 4-77).
- Connections
  Displays the Connections screen. For additional information, see "Bluetooth® connections screen" (P. 4-81).
- Volume
  Displays the volume adjustment screen. For additional information, see "Volume & beeps" (P. 4-84).

MAKING A CALL

1. Press the button on the Launch Bar. The "Phone" screen will appear on the display.
2. Select one of the options to make a call.

Phonebook

To access the phonebook:

1. Press the button on the steering wheel or touch the " " key on the launch bar.
2. Touch the "Phonebook" key.
3. Choose the desired entry from the displayed list.

Call History

1. Select a phonebook name or phone number from the recent incoming, outgoing, or missed calls tabs.
2. Touch a phonebook name or phone number listed to initiate the call.

Dial Number

1. Enter the phone number manually using the keypad displayed on the screen.
2. Touch the "OK" key on the screen to initiate the call.

For additional options to make a call, see "Voice commands" (P. 4-73).

RECEIVING/ENDING A CALL

When a call is received by the phone connected to the vehicle's Bluetooth® Hands-Free Phone System, the call information is displayed on the control panel display.

To accept the incoming call, either:

- Press the button on the steering wheel, or
- Touch the " Answer" key on the screen.

To end or reject an incoming call, either:

- Press and hold the button on the steering wheel, or
- Touch the " Decline" key on the screen.

If the user is not able to answer the call right away, touch the "Hold Call" key displayed on the screen. A message will be played for the caller: "I'm not able to take a call right now." The user may then accept the call when available or reject the call.

DURING A CALL

While a call is active the following options will appear on the control panel display:

- Mute
  Touch this key to mute or unmute the system.
- Dial Number
  Touch this key to dial digits during the phone call.
- Switch to Handset
  Touch the "Use Handset" key on the screen to transfer the call to the handset (cellular phone). To transfer the call back from the handset to the Bluetooth® Hands-Free Phone System, press the button on the control panel then select the "Transfer Hands-free" key on the screen.

NOTE:

Some jurisdictions prohibit the use of cellular telephones while driving.

- Switch Call
  This option will only be available when a second call is active.
  If supported by the phone, the Bluetooth® Hands-Free Phone System allows for call waiting functionality. If a call is received while another call is already active, a message will be displayed on the screen. Press the button on the steering wheel or touch the " Answer" key on screen to accept the incoming call. Touch the " Decline" key on the screen to reject the second call.

While a call is active, press the button on the steering wheel to access additional options. Speak one of the following commands:

- "Send Digits"
  Speak this command followed by the digits to enter digits during the phone call.
- "Switch call"
  Speak this command to hold the second call and switch back to the original call.

TEXT MESSAGING (if so equipped)

WARNING

- **Laws in some jurisdictions may restrict the use of "Text-to-Speech". Check local regulations before using this feature.**
- **Laws in some jurisdictions may restrict the use of some of the applications and features, such as social networking and texting. Check local regulations for any requirements.**
- **Use the text messaging feature after stopping your vehicle in a safe location. If you have to use the feature while driving, exercise extreme caution at all times so full attention may be given to vehicle operation.**
- **If you are unable to devote full attention to vehicle operation while using the text messaging feature, pull off the road to a safe location and stop your vehicle.**

NOTE:

This feature is automatically disabled if the connected device does not support the Message Access Profile (MAP). For additional information, refer to the phone's owner's manual for details and instructions.

NOTE:

Many phones may require special permission to enable text messaging. Check the phone's screen during Bluetooth® pairing. For some phones, you may need to enable 'Notifications' in the phone's Bluetooth® menu for text messages to appear on the headunit. For additional information, refer to your phone's owner's manual. Text message integration requires that the phone support MAP (Message Access Profile) for both receiving and sending text messages. Some phones may not support all text messaging features. Please refer to www.nissanusa.com/bluetooth or www.nissan.ca/bluetooth for compatibility information, as well as your device's owner's manual.

The system allows for the sending and receiving of text messages through the vehicle interface.

The availability of the text message function may vary depending on the cellular phone.

When the cellular phone connected to the vehicle receives a text message, a notification will appear on the control panel display. To check the message, touch the "Read" key. Touch the "Ignore" key to save the message to be checked later.

Access text messaging through the vehicles Bluetooth® Hands-Free Phone or through the vehicles control panel.

Text messaging using Bluetooth® Hands-Free Phone System (if so equipped)

Sending a text message (if so equipped)

1. Press and hold the button on the steering wheel for less than 1.5 seconds.
2. Say "Send Text" after the tone.
3. The system will provide a list of available commands in order to determine the recipient of the text message. Choose from the following:

- Phonebook
- Quick Dial
- Incoming Calls
- Outgoing Calls
- Missed Calls
- Dial

4. Once a recipient is chosen, the system prompts for which message to send. Nine predefined messages are available. To choose one of the predefined messages, speak one of the following after the tone:

- "Driving, can't text"
- "Call me"
- "On my way"
- "Running late"
- "Okay"
- "Yes"
- "No"
- "Where are you?"
- "When?"

Reading a received text message

1. Press and hold the button on the steering wheel for less than 1.5 seconds.
2. Say "Read Text" after the tone.

The display will show a list of 20 messages with the sender and delivery time. Touch the "Next" key on the screen to view all messages. To view a text message press the button on the steering wheel and speak the number item list on the screen. The following options will be available:

- Play
  Speak this command to have the system say the message.
- Reply
  Speak this command to send a text message response to the sender of the text message.
- Call
  Speak this command to call the sender.
- Previous
  Speak this command to move to the previous text message (if available).
- Next
  Speak this command to move to the next text message (if available).

Siri® Eyes Free (if so equipped)

If a connected phone is equipped with Siri®, it can also be used to create custom messages that are sent through the phone. For additional information, see "Siri® Eyes Free" (P. 4-64).

NOTE:

Text messages are only displayed if the vehicle speed is less than 5 mph (8 km/h).

NOTE:

For Apple iPhones®, text messages can only be sent through Siri.

Text messaging using the control panel

Display received message list

1. Press the button on the control panel.
2. Touch the "Text Message" key on the screen
3. Touch an item on the list to read or reply to the message.

Up to 100 messages can be stored in the message list.

Received message screen

Touching the "Read" key on the incoming message notification screen or selecting a message from the message list will show the details of the received message on the display.

Available actions:

- Prev.
  Touch this key to read the previous message.
- Next
  Touch this key to read the next message.
- Play/Stop
  Touch the "Play" key to have the hands-free phone system read out the received message. Touch the "Stop" key to stop reading.
- Call
  If the sender of the message is registered in the phonebook, touch the "Call" key to make a call to the sender.
- Reply
  A reply message can be selected from the predefined list.

Sending a text message (if so equipped)

This function may not be supported depending on the cellular phone.

1. Press the button on the control panel.
2. Touch the "Text Message" key on the screen.
3. Touch the "Create Message" key on the screen.

The following items are available:

Available item		Action
To	Enter Number by Keypad	Enter the phone number of the recipient using the keypad. Touch the “OK” key to confirm.
	Quick Dial	Select a recipient from the quick dial list.
	Phonebook	Select a recipient from the phonebook.
	Call History	Select a recipient/phone number from call history.
Select Text		Touch to display a list of predefined text messages.
Send		Touch to send the message.

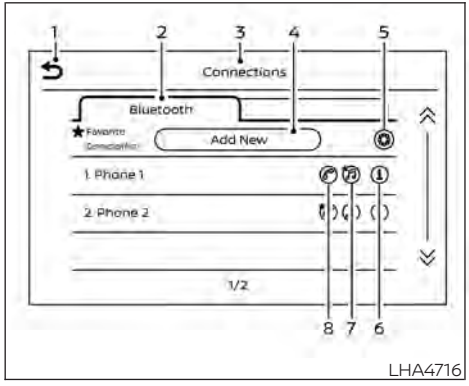

BLUETOOTH® CONNECTIONS SCREEN

1. " ⮌ " (back) key
2. Bluetooth tab
3. Connections screen
4. "Add New" key
5. " ⚙ " (settings) key
6. " ⓘ " (info) key
7. " ♫ " (Bluetooth® Audio connection) key
8. " ☎ " (Bluetooth® Hands-Free Phone System connection) key

Access the Connections screen to change settings and view Bluetooth® information. To access the Connections screen press the ⌂ MENU button on the control panel.

Touch the "Connections" key on the screen then select the Bluetooth tab.

The paired phone will be added to the list on the Bluetooth® connections screen.

Touching the name of another device on the list will switch the connected device.

" ⮌ " (back) key

Touch the " ⮌ " key to go back to the previous screen.

Connecting Bluetooth®

For additional information on connecting a cellular phone or device to the Bluetooth® Hands-Free Phone System, see "Bluetooth® connecting procedure" (P. 4-72).

NOTE:

Some cellular phones or other devices may cause interference or a buzzing noise to come from the audio system speakers. Storing the device in a different location may reduce or eliminate the noise.

Bluetooth tab

This tab will display up to six Bluetooth® devices. If six devices are already connected, one of the devices must be deleted before another device can be connected.

"Add New" key

Touch the key on the screen to connect a new Bluetooth® device. For additional information, see "Bluetooth® connecting procedure" (P. 4-72).

" ⚙ " (Bluetooth® settings) key

Touch the " ⚙ " key on the screen to display a list of options.

- **Bluetooth**
  Touch this key to turn the Bluetooth® connection on or off
- **Favorite (Connection first)**
  Touch this key to change which device will be connected first when multiple devices are connected to the vehicle.
  Turn the " ☎ " key on or off to make the device a favorite connection.
  Turn the " ♫ " key on or off to make the device a favorite connection.

- **Pin**
  Touch this key to customize the PIN code. Input a four digit number then touch the "OK" key. The new PIN will be set.

" ⓘ " (info) key

Touch the " ⓘ " key on the screen to display the information of the cellular phone or to delete the device.

Touch the "Delete" key to remove a paired device then select "Yes" when a message appears.

" ✆ " (Bluetooth® Hands-Free Phone System connection) key

A list of connected devices will be displayed on the screen. Touch the " ✆ " key next to the name to connect a device to the Hands-Free Phone System. If the phone is listed as a favorite, a star will appear on the icon. Touch the key again to disconnect the device. The device will not be removed from the list. For additional information on removing a device, see " ⓘ (info) key" (P. 4-82).

" ♫ " (Bluetooth® Audio connection) key

A list of connected devices will be displayed on the screen. Touch the " ♫ " key next to the name to connect a device to Bluetooth® Audio. If the device is listed as a favorite, a star will appear on the icon. Touch the key again to disconnect the device. The device will not be removed from the list. For additional information on removing a device, see " ⓘ (info) key" (P. 4-82).

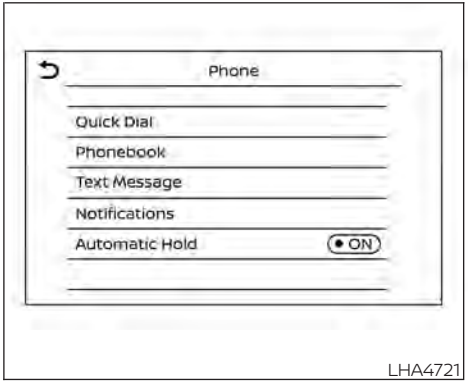

PHONE AND TEXT MESSAGE SETTINGS

Bluetooth® Hands-Free Phone System settings can be changed according to the user's preference. To access the "Phone" settings menu press the ⌂ MENU button on the control panel. Touch the "Settings" key then select the "Phone" key.

The following options are available:

Menu Item		Result
Quick Dial	Edit	Entries in the Quick Dial can be edited. For additional information, see "Quick dial" (P. 4-74).
	Delete All	Deletes all of the stored phone numbers in quick dial.
Phonebook	Download Entire Phone-book	All the phone numbers that are stored in a phonebook in the cellular phone that is connected to the vehicle are downloaded at once. For additional information, refer to the cellular phone's owner's manual.
	Auto Downloaded	Turns on/off automatic downloading of the phonebook when a new phone is connected.
Text Message	Text Message	Turns the text messaging function on/off.
	Text Message Ringtone	Turn the incoming message sound on/off.
	Signature	Turns the signature setting for the outgoing text message on/off.
	Auto Reply	Turns the automatic text message reply function on/off.
	Auto Reply Text Message	Select the text message to be used for the automatic reply. Choose from a list of predefined messages.
Notifications	Driver Only	When this item is turned on, incoming call notification is displayed only on the handset.
	Vehicle Ringtone	Turns the vehicle ringtone on/off.
Automatic Hold		When this item turns on, an incoming call will be put on hold automatically.

VOLUME & BEEPS

There are several methods to customize the volume settings.

Volume & Beeps

The Volume & Beeps screen can be found by pressing the MENU button on the control panel, touching the "Settings" key on the screen and selecting "Volume & Beeps". To adjust the volume of the following options, touch the "–" and "+" keys on the screen.

The available settings are:

- Ringtone
  Adjust the volume level of the ringtone of incoming calls.
- Outgoing Call
  Adjust the volume level of the outgoing calls.
- Voice Prompt Vol.
  Adjust the volume level of the system voice.
- Text-to-speech Vol.
  Adjust the volume of the replay voice for text messaging.
- Button Beeps
  Turns on/off the button beep sounds and alarm for prohibited operations.

Volume Settings

The Volume settings screen can be found by pressing the button on the control panel then touching the "Volume" key on the screen. To adjust the volume of the following options, touch the "–" and "+" keys on the screen.

The available settings are:

- Ringtone
  Adjust the volume level of the ringtone of incoming calls.
- Outgoing Call
  Adjust the volume level of the outgoing calls.

"Made for iPod", "Made for iPhone" and "Made for iPad" mean that an electronic accessory has been designed to connect specifically to iPod, iPhone or iPad, respectively, and has been certified by the developer to meet Apple performance standards. Apple is not responsible for the operation of this device or its compliance with safety and regulatory standards. Please note that the use of this accessory with iPod, iPhone or iPad may affect wireless performance.

iPad, iPhone, iPod classic, iPod nano, iPod shuffle and iPod touch are trademarks of Apple Inc., registered in the U.S. and other countries. Lightning is a trademark of Apple Inc.

MEMO

5 Starting and driving

Precautions when starting and driving 5-4
Exhaust gas (carbon monoxide) 5-4
Three-way catalyst 5-4
Tire Pressure Monitoring System (TPMS) 5-5
Avoiding collision and rollover 5-9
Off-road recovery 5-9
Rapid air pressure loss 5-9
Drinking alcohol/drugs and driving 5-10
Driving safety precautions 5-10
Push-button ignition switch 5-13
Operating range 5-14
Push-button ignition switch positions 5-14
Emergency engine shut off 5-15
NISSAN Intelligent Key® battery discharge 5-15
NISSAN Vehicle Immobilizer System 5-16
Before starting the engine 5-16
Starting the engine 5-16
Remote Engine Start 5-17
Driving the vehicle 5-18
Continuously Variable Transmission (CVT) 5-18
Parking brake 5-25
Manual parking brake (pedal type) 5-25
Electronic parking brake (switch type) 5-25
Automatic brake hold (if so equipped) 5-27
How to activate/deactivate the automatic brake hold function 5-28
How to use the automatic brake hold function 5-29
Traffic Sign Recognition (TSR) (if so equipped) . . . 5-30
System operation 5-31
Turning the Traffic Sign Recognition (TSR) system on and off 5-32
System temporarily unavailable 5-32
System malfunction 5-32
System maintenance 5-33
Lane Departure Warning (LDW) 5-33
LDW system operation 5-34
How to enable/disable the LDW system 5-36
LDW system limitations 5-38
System temporarily unavailable 5-39
System malfunction 5-39
System maintenance 5-39
Intelligent Lane Intervention (I-LI) (if so equipped) 5-40
I-LI system operation 5-41
How to enable/disable the I-LI system 5-42
I-LI system limitations 5-43
System temporarily unavailable 5-44
System malfunction 5-45

System maintenance 5-45
Blind Spot Warning (BSW) (if so equipped) 5-46
BSW system operation 5-48
How to enable/disable the BSW system 5-49
BSW system limitations 5-51
BSW driving situations 5-52
System temporarily unavailable 5-55
System maintenance 5-57
Rear Cross Traffic Alert (RCTA) (if so equipped) . . 5-58
RCTA system operation 5-58
How to enable/disable the RCTA system 5-61
RCTA system limitations 5-63
System temporarily unavailable 5-65
System maintenance 5-67
Cruise control (if so equipped) 5-68
Precautions on cruise control 5-68
Cruise control operations 5-69
Intelligent Cruise Control (ICC) (if so equipped) . . 5-71
How to select the cruise control mode 5-73
Vehicle-to-vehicle distance control mode 5-73
Vehicle-to-vehicle distance control mode operation 5-74
Vehicle-to-vehicle distance control mode switches 5-76
Vehicle-to-vehicle distance control mode limitations 5-82
System temporarily unavailable 5-86
System maintenance 5-88
Conventional (fixed speed) cruise control mode 5-90
ProPILOT Assist (if so equipped) 5-94
ProPILOT Assist system operation 5-96
Turning the conventional (fixed speed) cruise control mode on 5-99
Operating ProPILOT Assist 5-100
How to enable/disable the Steering Assist 5-105
Intelligent Cruise Control (ICC) (for vehicles with ProPILOT Assist) 5-106
Steering Assist 5-117
Conventional (fixed speed) cruise control mode 5-123
Rear Automatic Braking (RAB) (if so equipped) 5-127
RAB system operation 5-128
Turning the RAB system on/off 5-130

RAB system limitations 5-132
System malfunction 5-134
System maintenance 5-134
Automatic Emergency Braking (AEB) with Pedestrian Detection 5-135
AEB with Pedestrian Detection system operation 5-136
Turning the AEB with Pedestrian Detection system ON/OFF 5-138
AEB with Pedestrian Detection system limitations 5-140
System temporarily unavailable 5-143
System malfunction 5-145
System maintenance 5-146
Intelligent Forward Collision Warning (I-FCW) . . 5-147
I-FCW system operation 5-150
Turning the I-FCW system on/off 5-151
I-FCW system limitations 5-153
System temporarily unavailable 5-158
System malfunction 5-160
System maintenance 5-161
Intelligent Driver Alertness (I-DA) 5-162
Intelligent Driver Alertness system operation 5-162
How to enable/disable the Intelligent Driver Alertness (I-DA) system 5-164
Intelligent Driver Alertness (I-DA) system limitations 5-165
Break-in schedule 5-167
Fuel efficient driving tips 5-167
Increasing fuel economy 5-168
All-Wheel Drive (AWD) (if so equipped) 5-168
Parking/parking on hills 5-171
Power steering 5-172
Brake system 5-173
Brake precautions 5-173
Anti-lock Braking System (ABS) 5-173
Brake Assist 5-175
Vehicle Dynamic Control (VDC) system 5-175
Brake force distribution 5-177
Chassis Control (if so equipped) 5-178
Intelligent Trace Control (I-TC) 5-178
Active Ride Control (ARC) 5-178
Hill start assist system 5-178
Rear Sonar System (RSS) (if so equipped) 5-179
System operation 5-180

How to enable/disable the sonar system 5-182
Sonar limitations 5-184
System temporarily unavailable 5-184
System maintenance 5-184
Cold weather driving 5-185
Freeing a frozen door lock 5-185
Antifreeze 5-185
Battery 5-185
Draining of coolant water 5-185
Tire equipment 5-185
Special winter equipment 5-186
Driving on snow or ice 5-186
Engine block heater (if so equipped) 5-186
Active noise cancellation/Active sound enhancement (if so equipped) 5-187
Active noise cancellation 5-187
Active sound enhancement 5-187

⚠ WARNING

- **Do not leave children or adults who would normally require the assistance of others alone in your vehicle. Pets should also not be left alone. They could accidentally injure themselves or others through inadvertent operation of the vehicle. Also, on hot, sunny days, temperatures in a closed vehicle could quickly become high enough to cause severe or possibly fatal injuries to people or animals.**
- **Closely supervise children when they are around cars to prevent them from playing and becoming locked in the trunk where they could be seriously injured. Keep the car locked, with the rear seatback and trunk lid securely latched when not in use, and prevent children's access to car keys.**

EXHAUST GAS (carbon monoxide)

⚠ WARNING

- **Do not breathe exhaust gases; they contain colorless and odorless carbon monoxide. Carbon monoxide is dangerous. It can cause unconsciousness or death.**
- **If you suspect that exhaust fumes are entering the vehicle, drive with all windows fully open, and have the vehicle inspected immediately.**
- **Do not run the engine in closed spaces such as a garage.**
- **Do not park the vehicle with the engine running for any extended length of time.**
- **Keep the rear vent windows, liftgates, doors and trunk lids (if so equipped) closed while driving, otherwise exhaust gases could be drawn into the passenger compartment. If you must drive with one of these open, follow these precautions:**
  1. **Open all the windows.**
  2. **Set the air recirculation button to off and the fan control dial to high to circulate the air.**
- **If electrical wiring or other cable connections must pass to a trailer through the seal on the trunk lid or the body, follow the manufacturer's recommendation to prevent carbon monoxide entry into the vehicle.**
- **The exhaust system and body should be inspected by a qualified mechanic whenever:**
  a. **The vehicle is raised for service.**
  b. **You suspect that exhaust fumes are entering into the passenger compartment.**
  c. **You notice a change in the sound of the exhaust system.**
  d. **You have had an accident involving damage to the exhaust system, underbody, or rear of the vehicle.**

THREE-WAY CATALYST

The three-way catalyst is an emission control device installed in the exhaust system. Exhaust gases in the three-way catalyst are burned at high temperatures to help reduce pollutants.

⚠ WARNING

- **The exhaust gas and the exhaust system are very hot. Keep people, animals or flammable materials away from the exhaust system components.**

- **Do not stop or park the vehicle over flammable materials such as dry grass, waste paper or rags. They may ignite and cause a fire.**

⚠ CAUTION

- **Do not use leaded gasoline. Deposits from leaded gasoline will seriously reduce the three-way catalyst's ability to help reduce exhaust pollutants.**
- **Keep your engine tuned up. Malfunctions in the ignition, fuel injection, or electrical systems can cause overrich fuel flow into the three-way catalyst, causing it to overheat. Do not keep driving if the engine misfires, or if noticeable loss of performance or other unusual operating conditions are detected. Have the vehicle inspected promptly. It is recommended that you visit a NISSAN dealer for this service.**
- **Avoid driving with an extremely low fuel level. Running out of fuel could cause the engine to misfire, damaging the three-way catalyst.**
- **Do not race the engine while warming it up.**
- **Do not push or tow your vehicle to start the engine.**

TIRE PRESSURE MONITORING SYSTEM (TPMS)

Each tire, including the spare (if provided), should be checked monthly when cold and inflated to the inflation pressure recommended by the vehicle manufacturer on the vehicle placard or tire inflation pressure label. (If your vehicle has tires of a different size than the size indicated on the vehicle placard or tire inflation pressure label, you should determine the proper tire inflation pressure for those tires.)

As an added safety feature, your vehicle has been equipped with a Tire Pressure Monitoring System (TPMS) that illuminates a low tire pressure telltale when one or more of your tires is significantly underinflated. Accordingly, when the low tire pressure telltale illuminates, you should stop and check your tires as soon as possible, and inflate them to the proper pressure. Driving on a significantly underinflated tire causes the tire to overheat and can lead to tire failure. Under-inflation also reduces fuel efficiency and tire tread life, and may affect the vehicle's handling and stopping ability.

Please note that the TPMS is not a substitute for proper tire maintenance, and it is the driver's responsibility to maintain correct tire pressure, even if under-inflation has not reached the level to trigger illumination of the TPMS low tire pressure telltale.

Your vehicle has also been equipped with a TPMS malfunction indicator to indicate when the system is not operating properly. The TPMS malfunction indicator is combined with the low tire pressure telltale. When the system detects a malfunction, the telltale will flash for approximately one minute and then remain continuously illuminated. This sequence will continue upon subsequent vehicle start-ups as long as the malfunction exists. When the malfunction indicator is illuminated, the system may not be able to detect or signal low tire pressure as intended. TPMS malfunctions may occur for a variety of reasons, including the installation of replacement or alternate tires or wheels on the vehicle that prevent the TPMS from functioning properly. Always check the TPMS malfunction telltale after replacing one or more tires or wheels on your vehicle to ensure that the replacement or alternate tires and wheels allow the TPMS to continue to function properly.

Additional information:

- When using a wheel without the TPMS such as the spare tire, the TPMS does not monitor the tire pressure of the spare tire.
- The TPMS will activate only when the vehicle is driven at speeds above 16 mph (25 km/h). Also, this system may not detect a sudden drop in tire pressure (for example, a flat tire while driving).
- The low tire pressure warning light does not automatically turn off when the tire pressure is adjusted on all four tires. After all four tires are inflated to the recommended pressure, the vehicle must be driven at speeds above 16 mph (25 km/h) to activate the TPMS and turn off the low tire pressure warning light. Use a tire pressure gauge to check the tire pressure.
- The "Tire Pressure Low - Add Air" warning appears in the vehicle information display when the low tire pressure warning light is illuminated and low tire pressure is detected. The "Tire Pressure Low - Add Air" warning turns off when the low tire pressure warning light turns off.
- The "Tire Pressure Low - Add Air" warning appears each time the ignition switch is placed in the ON position as long as the low tire pressure warning light remains illuminated.
- The "Tire Pressure Low - Add Air" warning does not appear if the low tire pressure warning light illuminates to indicate a TPMS malfunction.
- Tire pressure rises and falls depending on the heat caused by the vehicle's operation and the outside temperature. Do not reduce the tire pressure after driving because the tire pressure rises after driving. Low outside temperature can lower the temperature of the air inside the tire which can cause a lower tire inflation pressure. This may cause the low tire pressure warning light to illuminate. If the warning light illuminates, check the tire pressure for all four tires.
- The Tire and Loading Information label is located in the driver's door opening.
- You can also check the tire pressure of all tires (except the spare) on the vehicle information display screen. The order of the tire pressure figures displayed on the screen corresponds with the actual order of the tire position.

For additional information, see "Low tire pressure warning light" (P. 2-13), "Tire Pressure Monitoring System (TPMS)" (P. 6-3) and "Tire pressure" (P. 8-29).

⚠ WARNING

- **Radio waves could adversely affect electric medical equipment. Those who use a pacemaker should contact the electric medical equipment manufacturer for the possible influences before use.**

- **If the low tire pressure warning light illuminates while driving, avoid sudden steering maneuvers or abrupt braking, reduce vehicle speed, pull off the road to a safe location and stop the vehicle as soon as possible. Driving with underinflated tires may permanently damage the tires and increase the likelihood of tire failure. Serious vehicle damage could occur and may lead to an accident and could result in serious personal injury. Check the tire pressure for all four tires. Adjust the tire pressure to the recommended COLD tire pressure shown on the Tire and Loading Information label to turn the low tire pressure warning light off. If you have a flat tire, replace it with a spare tire as soon as possible. (For additional information, see "Flat tire" (P. 6-3) for changing a flat tire.)**
- **When using a wheel without the TPMS such as the spare tire, when a spare tire is mounted or a wheel is replaced, tire pressure will not be indicated, the TPMS will not function and the low tire pressure warning light will flash for approximately 1 minute. The light will remain on after 1 minute. It is recommended that you visit a NISSAN dealer for tire replacement and/or system resetting.**
- **Replacing tires with those not originally specified by NISSAN could affect the proper operation of the TPMS.**
- **Do not inject any tire liquid or aerosol tire sealant into the tires, as this may cause a malfunction of the tire pressure sensors.**

⚠ CAUTION

Do not place metalized film or any metal parts (antenna, etc.) on the windows. This may cause poor reception of the signals from the tire pressure sensors, and the TPMS will not function properly.

Some devices and transmitters may temporarily interfere with the operation of the TPMS and cause the low tire pressure warning light to illuminate.

Some examples are:

- Facilities or electric devices using similar radio frequencies are near the vehicle.
- If a transmitter set to similar frequencies is being used in or near the vehicle.
- If a computer (or similar equipment) or a DC/AC converter is being used in or near the vehicle.

The low tire pressure warning light may illuminate in the following cases:

- If the vehicle is equipped with a wheel and tire without TPMS.
- If the TPMS has been replaced and the ID has not been registered.
- If the wheel is not originally specified by NISSAN.

FCC Notice:

For USA:

This device complies with Part 15 of the FCC Rules. Operation is subject to the following two conditions: (1) This device may not cause harmful interference, and (2) this device must accept any interference received, including interference that may cause undesired operation.

NOTE:
Changes or modifications not expressly approved by the party responsible for compliance could void the user's authority to operate the equipment.

For Canada:

This device contains licence-exempt transmitter(s)/receiver(s) that comply with Innovation, Science and Economic Development Canada's licence-exempt RSS(s). Operation is subject to the following two conditions: (1) This device may not cause interference. (2) This device must accept any interference, including interference that may cause undesired operation of the device.

TPMS with Easy-Fill Tire Alert

When adding air to an under-inflated tire, the TPMS with Easy-Fill Tire Alert provides visual and audible signals outside the vehicle to help you inflate the tires to the recommended COLD tire pressure.

Vehicle set-up

1. Park the vehicle in a safe and level place.
2. Apply the parking brake and place the shift lever in the P (Park) position.
3. Place the ignition switch in the ON position. Do not start the engine.

Operation

1. Add air to the tire.
2. After a few seconds, the hazard indicators will start flashing.
3. When the designated pressure is reached, the horn beeps once and the hazard indicators stop flashing.
4. Perform the above steps for each tire.
   - If the tire is over-inflated more than approximately 4 psi (30 kPa), the horn beeps and the hazard indicators flash three times. To correct the pressure, push the core of the valve stem on the tire briefly to release pressure. When the pressure reaches the designated pressure, the horn beeps once.
   - If the hazard indicator does not flash within approximately 15 seconds after starting to inflate the tire, it indicates that the Easy-Fill Tire Alert is not operating.
   - The TPMS will not activate the Easy-Fill Tire Alert under the following conditions:
     - If there is interference from an external device or transmitter.
     - The air pressure from the inflation device is not sufficient to inflate the tire.
     - There is a malfunction in the TPMS.
     - There is a malfunction in the horn or hazard indicators.
     - The identification code of the tire pressure sensor is not registered to the system.
     - The battery of the tire pressure sensor is low.
   - If the Easy-Fill Tire Alert does not operate due to TPMS interference, move the vehicle about 3 ft (1 m) backward or forward and try again.

If the Easy-Fill Tire Alert is not working, use a tire pressure gauge.

AVOIDING COLLISION AND ROLLOVER

⚠ WARNING

Failure to operate this vehicle in a safe and prudent manner may result in loss of control or an accident.

Be alert and drive defensively at all times. Obey all traffic regulations. Avoid excessive speed, high speed cornering, or sudden steering maneuvers, because these driving practices could cause you to lose control of your vehicle.

As with any vehicle, loss of control could result in a collision with other vehicles or objects or cause the vehicle to roll over, particularly if the loss of control causes the vehicle to slide sideways.

Be attentive at all times, and avoid driving when tired. Never drive when under the influence of alcohol or drugs (including prescription or over-the-counter drugs which may cause drowsiness). Always wear your seat belt as outlined in the "Safety – Seats, seat belts and supplemental restraint system" section of this manual, and also instruct your passengers to do so.

Seat belts help reduce the risk of injury in collisions and rollovers.

In a rollover crash, an unbelted person is significantly more likely to die than a person wearing a seat belt.

OFF-ROAD RECOVERY

While driving, the right side or left side wheels may unintentionally leave the road surface. If this occurs, maintain control of the vehicle by following the procedure below. Please note that this procedure is only a general guide. The vehicle must be driven as appropriate based on the conditions of the vehicle, road and traffic.

1. Remain calm and do not overreact.
2. Do not apply the brakes.
3. Maintain a firm grip on the steering wheel with both hands and try to hold a straight course.
4. When appropriate, slowly release the accelerator pedal to gradually slow the vehicle.
5. If there is nothing in the way, steer the vehicle to follow the road while vehicle speed is reduced. Do not attempt to drive the vehicle back onto the road surface until vehicle speed is reduced.
6. When it is safe to do so, gradually turn the steering wheel until both tires return to the road surface. When all tires are on the road surface, steer the vehicle to stay in the appropriate driving lane.
   - If you decide that it is not safe to return the vehicle to the road surface based on vehicle, road or traffic conditions, gradually slow the vehicle to a stop in a safe place off the road.

RAPID AIR PRESSURE LOSS

Rapid air pressure loss or a "blow-out" can occur if the tire is punctured or is damaged due to hitting a curb or pothole. Rapid air pressure loss can also be caused by driving on under-inflated tires.

Rapid air pressure loss can affect the handling and stability of the vehicle, especially at highway speeds.

Help prevent rapid air pressure loss by maintaining the correct air pressure and visually inspecting the tires for wear and damage. For additional information, see "Wheels and tires" (P. 8-29). If a tire rapidly loses air pressure or "blows-out" while driving, maintain control of the vehicle by following the procedure below. Please note that this procedure is only a general guide.

The vehicle must be driven as appropriate based on the conditions of the vehicle, road and traffic.

⚠ WARNING

The following actions can increase the chance of losing control of the vehicle if there is a sudden loss of tire air pressure. Losing control of the vehicle may cause a collision and result in personal injury.

- **The vehicle generally moves or pulls in the direction of the flat tire.**
- **Do not rapidly apply the brakes.**
- **Do not rapidly release the accelerator pedal.**
- **Do not rapidly turn the steering wheel.**

1. Remain calm and do not overreact.
2. Maintain a firm grip on the steering wheel with both hands and try to hold a straight course.
3. When appropriate, slowly release the accelerator pedal to gradually slow the vehicle.
4. Gradually steer the vehicle to a safe location off the road and away from traffic if possible.
5. Lightly apply the brake pedal to gradually stop the vehicle.
6. Turn on the hazard warning flashers and contact a roadside emergency service to change the tire. For additional information, see "Changing a flat tire" (P. 6-4).

DRINKING ALCOHOL/DRUGS AND DRIVING

⚠ WARNING

Never drive under the influence of alcohol or drugs. Alcohol in the bloodstream reduces coordination, delays reaction time and impairs judgement. Driving after drinking alcohol increases the likelihood of being involved in an accident injuring yourself and others. Additionally, if you are injured in an accident, alcohol can increase the severity of the injury.

NISSAN is committed to safe driving. However, you must choose not to drive under the influence of alcohol. Every year thousands of people are injured or killed in alcohol-related collisions. Although the local laws vary on what is considered to be legally intoxicated, the fact is that alcohol affects all people differently and most people underestimate the effects of alcohol.

Remember, drinking and driving don't mix! That is true for drugs (over-the-counter, prescription) and illegal drugs, too. Don't drive if your ability to operate your vehicle is impaired by alcohol, drugs, or some other physical condition.

DRIVING SAFETY PRECAUTIONS

Your NISSAN is designed for both normal and off-road use. However, avoid driving in deep water or mud as your NISSAN is mainly designed for leisure use, unlike a conventional off-road vehicle.

Remember that 2-Wheel Drive (2WD) models are less capable than All-Wheel Drive (AWD) models for rough road driving and extrication when stuck in deep snow or mud, or the like.

Please observe the following precautions:

⚠ WARNING

- **Spinning the front wheels on slippery surfaces may cause the AWD warning message to display and the AWD system to automatically switch from the AWD to the 2WD mode. This could reduce the traction. Be especially careful when towing a trailer (AWD models).**
- **Drive carefully when off the road and avoid dangerous areas. Every person who drives or rides in this vehicle should be seated with their seat belt fastened. This will keep you and your passengers in position when driving over rough terrain.**
- **Do not drive across steep slopes. Instead drive either straight up or straight down the slopes. Off-road vehicles can tip over sideways much more easily than they can forward or backward.**
- **Many hills are too steep for any vehicle. If you drive up them, you may stall. If you drive down them, you may not be able to control your speed. If you drive across them, you may roll over.**
- **Do not shift gears while driving on downhill grades as this could cause loss of control of the vehicle.**
- **Stay alert when driving to the top of a hill. At the top there could be a drop-off or other hazard that could cause an accident.**
- **If your engine stalls or you cannot make it to the top of a steep hill, never attempt to turn around. Your vehicle could tip or roll over. Always back straight down in R (Reverse) gear and apply brakes to control your speed.**
- **Heavy braking going down a hill could cause your brakes to overheat and fade, resulting in loss of control and an accident. Apply brakes lightly and use a low gear to control your speed.**
- **Unsecured cargo can be thrown around when driving over rough terrain. Properly secure all cargo so it will not be thrown forward and cause injury to you or your passengers.**
- **Exceeding the roof rack capacity can raise the center of gravity excessively and affect the handling and stability of the vehicle.**
- **Secure heavy loads in the cargo area as far forward and as low as possible. Do not equip the vehicle with tires larger than specified in this manual. This could cause your vehicle to roll over.**
- **Do not grip the inside or spokes of the steering wheel when driving off-road. The steering wheel could move suddenly and injure your hands. Instead drive with your fingers and thumbs on the outside of the rim.**
- **Before operating the vehicle, ensure that the driver and all passengers have their seat belts fastened.**
- **Always drive with the floor mats in place as the floor may become hot.**
- **Lower your speed when encountering strong crosswinds. With a higher center of gravity, your NISSAN is more affected by strong side winds. Slower speeds ensure better vehicle control.**
- **Do not drive beyond the performance capability of the tires, even with AWD engaged.**

- **For AWD equipped vehicles, do not attempt to raise two wheels off the ground and shift the transmission to any drive or reverse position with the engine running. Doing so may result in drivetrain damage or unexpected vehicle movement which could result in serious vehicle damage or personal injury.**
- **Do not attempt to test an AWD equipped vehicle on a 2-wheel dynamometer (such as the dynamometers used by some states for emissions testing) or similar equipment even if the other two wheels are raised off the ground. Make sure you inform test facility personnel that your vehicle is equipped with AWD before it is placed on a dynamometer. Using the wrong test equipment may result in drivetrain damage or unexpected vehicle movement which could result in serious vehicle damage or personal injury.**
- **When a wheel is off the ground due to an unlevel surface, do not spin the wheel excessively.**

- **Accelerating quickly, sharp steering maneuvers or sudden braking may cause loss of control.**
- **If at all possible, avoid sharp turning maneuvers, particularly at high speeds. Your NISSAN vehicle has a higher center of gravity than a passenger car. The vehicle is not designed for cornering at the same speeds as passenger cars.**
- **Failure to operate this vehicle correctly could result in loss of control and/or a rollover accident.**
- **Always use tires of the same type, size, brand, construction (bias, bias-belted, or radial), and tread pattern on all four wheels. Install tire chains on the front wheels when driving on slippery roads and drive carefully.**
- **Be sure to check the brakes immediately after driving in mud or water. For additional information, see "Brake precautions" (P. 5-173).**
- **Avoid parking your vehicle on steep hills. If you get out of the vehicle and it rolls forward, backward or sideways, you could be injured.**

- **Whenever you drive off-road through sand, mud or water as deep as the wheel hub, more frequent maintenance may be required. For additional information, see "Maintenance under severe operating conditions" (P. 9-7).**

⚠ WARNING

Do not operate the push-button ignition switch while driving the vehicle except in an emergency. (The engine will stop when the ignition switch is pushed three consecutive times in quick succession or the ignition switch is pushed and held for more than 2 seconds.) If the engine stops while the vehicle is being driven, this could lead to a crash and serious injury.

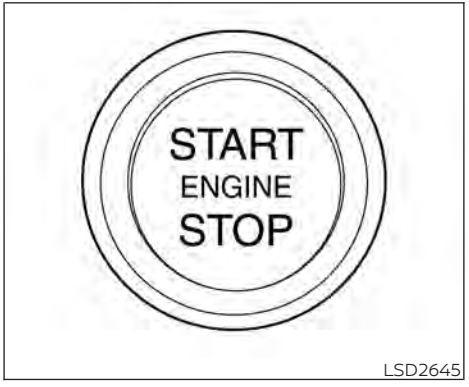

When the ignition switch is pushed without depressing the brake pedal, the ignition switch will illuminate.

Push the ignition switch center:

- Once to change to ON.
- Two times to change to OFF.

The ignition switch will automatically return to the LOCK position when any door is either opened or closed with the switch in the OFF position.

The ignition lock is designed so that the ignition switch cannot be placed in the OFF position until the shift lever is moved to the P (Park) position.

When the ignition switch cannot be placed in the OFF position, proceed as follows:

1. Move the shift lever to the P (Park) position.
2. Push the ignition switch. The ignition switch position will change to the ON position.
3. Push the ignition switch again to the OFF position.

The shift lever can be moved from the P (Park) position if the ignition switch is in the ON position and the brake pedal is depressed.

If the battery of the vehicle is discharged, the ignition switch cannot be moved from the LOCK position.

Some indicators and warnings for operation are displayed on the vehicle information display. For additional information, see "Vehicle information display – 5 inch (13 cm) Type A (if so equipped)" (P. 2-18) or "Vehicle information display – 7 inch (18 cm) Type B (if so equipped)" (P. 2-34).

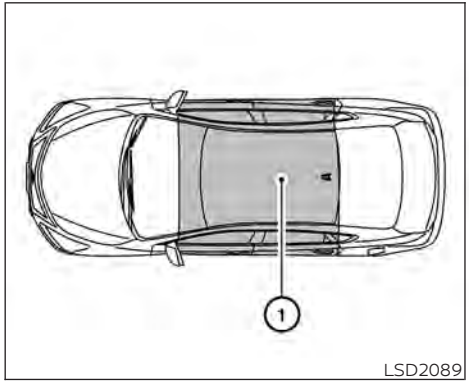

OPERATING RANGE

The Intelligent Key functions can only be used when the Intelligent Key is within the specified operating range.

When the Intelligent Key battery is almost discharged or strong radio waves are present near the operating location, the Intelligent Key system's operating range becomes narrower and may not function properly.

If the Intelligent Key is within the operating range, it is possible for anyone, even someone who does not carry the Intelligent Key, to push the ignition switch to start the engine.

The operating range of the engine start function is inside of the vehicle ①.

- The luggage area is not included in the operating range, but the Intelligent Key may function.
- If the Intelligent Key is placed on the instrument panel or inside the glove box, storage bin or door pocket, the Intelligent Key may not function.
- If the Intelligent Key is placed near the door or window outside the vehicle, the Intelligent Key may function.

PUSH-BUTTON IGNITION SWITCH POSITIONS

LOCK (Normal parking position)

The ignition switch can only be locked in this position.

The ignition switch will be unlocked when it is pushed to the ON position while carrying the Intelligent Key.

The ignition switch will lock when any door is opened or closed with the ignition switched off.

ON (Normal operating position)

This position turns on the ignition system and electrical accessories.

ON has a battery saver feature that will place the ignition switch in the OFF position, if the vehicle is not running, after some time under the following conditions:

- All doors are closed.
- The shift lever is in P (Park).

The battery saver feature will be canceled if any of the following occur:

- Any door is opened.
- The shift lever is moved out of the P (Park) position.
- The ignition switch changes position.

⚠ CAUTION

Do not leave the vehicle with the ignition switch in the ON position when the engine is not running for an extended period. This can discharge the battery.

OFF

The ignition switch is in the OFF position when the engine is turned off using the ignition switch. No lights will illuminate on the ignition switch.

AUTO ACC:

With the vehicle in the P (Park) position, the Intelligent Key with you and the ignition switch placed from the ON position to the OFF position, the radio can still be used for a period of time, or until the driver's door is opened.

After a period of time, functions such as radio, navigation, and Bluetooth® Hands-Free Phone System may be restarted by pressing the POWER button/VOLUME control knob or the key fob unlock button. For additional information, refer to the separate NissanConnect® Owner's Manual.

EMERGENCY ENGINE SHUT OFF

To shut off the engine in an emergency situation while driving, perform the following procedure:

- Rapidly push the ignition switch three consecutive times in less than 1.5 seconds, or
- Push and hold the ignition switch for more than 2 seconds.

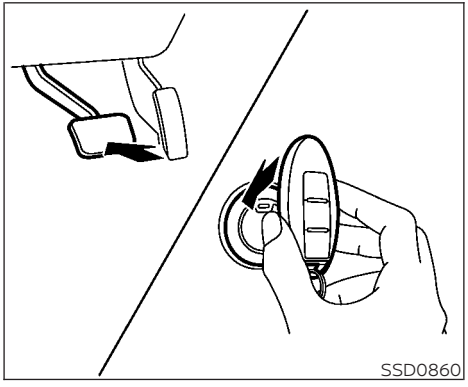

NISSAN INTELLIGENT KEY® BATTERY DISCHARGE

If the battery of the NISSAN Intelligent Key® is discharged or environmental conditions interfere with the Intelligent Key operation, start the engine according to the following procedure:

1. Place the shift lever in the P (Park) position.
2. Firmly apply the foot brake.
3. Touch the ignition switch with the Intelligent Key as illustrated. (A chime will sound.)

   After step 3 is performed, when the ignition switch is pushed without depressing the brake pedal, the ignition switch position will change to the ON position.
4. Push the ignition switch while depressing the brake pedal within 10 seconds after the chime sounds. The engine will start.

NOTE:

- **When the ignition switch is pushed to the ON position or the engine is started by the above procedure, the Intelligent Key battery discharge indicator appears in the vehicle information display even when the Intelligent Key is inside the vehicle. This is not a malfunction. To turn off the Intelligent Key battery discharge indicator, touch the ignition switch with the Intelligent Key again.**
- **If the Intelligent Key battery discharge indicator appears, replace the battery as soon as possible. For additional information, see "Battery replacement" (P. 8-23).**

NISSAN VEHICLE IMMOBILIZER SYSTEM

The NISSAN Vehicle Immobilizer System will not allow the engine to start without the use of the registered key.

If the engine fails to start using a registered key (for example, when interference is caused by another registered key, an automated toll road device or automatic payment device on the key ring), restart the engine using the following procedure:

1. Leave the ignition switch in the ON position for approximately 5 seconds.
2. Place the ignition switch in the OFF or LOCK position, and wait approximately 10 seconds.
3. Repeat steps 1 and 2.
4. Restart the engine while holding the device (which may have caused the interference) separate from the registered key.

If the no start condition re-occurs, NISSAN recommends placing the registered key on a separate key ring to avoid interference from other devices.

BEFORE STARTING THE ENGINE

- Make sure the area around the vehicle is clear.
- Check fluid levels such as engine oil, coolant, brake fluid, and windshield-washer fluid as frequently as possible, or at least whenever you refuel.
- Check that all windows and lights are clean.
- Visually inspect tires for their appearance and condition. Also check tires for proper inflation.
- Lock all doors.
- Position seat and adjust headrests/head restraints.
- Adjust inside and outside mirrors.
- Fasten seat belts and ask all passengers to do likewise.
- Check the operation of warning lights when the ignition switch is pushed to the ON position. For additional information, see "Warning lights, indicator lights and audible reminders" (P. 2-9).

STARTING THE ENGINE

1. Apply the parking brake.
2. Move the shift lever to P (Park) or N (Neutral). P (Park) is recommended.

   The starter is designed not to operate if the shift lever is in any of the driving positions.
3. Push the ignition switch to the ON position. Depress the brake pedal and push the ignition switch to start the engine.

   To start the engine immediately, push and release the ignition switch while depressing the brake pedal with the ignition switch in any position.
   - If the engine is very hard to start in extremely cold weather or when restarting, depress the accelerator pedal a little (approximately 1/3 to the floor) and while holding, crank the engine. Release the accelerator pedal when the engine starts.
   - If the engine is very hard to start because it is flooded, depress the accelerator pedal all the way to the floor and hold it. Push the ignition switch to the ON position to start cranking the engine. After 5 or 6 seconds, stop cranking by pushing the ignition switch to the LOCK position. After

cranking the engine, release the accelerator pedal. Crank the engine with your foot off the accelerator pedal by depressing the brake pedal and pushing the ignition switch to start the engine. If the engine starts, but fails to run, repeat the above procedure.

⚠ CAUTION

Do not operate the starter for more than 15 seconds at a time. If the engine does not start, push the ignition switch to the OFF position and wait 10 seconds before cranking again, otherwise the starter could be damaged.

4. **Warm-up:**

   Allow the engine to idle for at least 30 seconds after starting. Do not race the engine while warming it up. Drive at a moderate speed for a short distance first, especially in cold weather. In cold weather, keep the engine running for a minimum of 2 to 3 minutes before shutting it off. Starting and stopping the engine over a short period of time may make the vehicle more difficult to start.

5. To stop the engine, move the shift lever to the P (Park) position and push the ignition switch to the OFF position.

NOTE:

Care should be taken to avoid situations that can lead to potential battery discharge and potential no-start conditions such as:

1. **Installation or extended use of electronic accessories that consume battery power when the engine is not running (phone chargers, GPS, DVD players, etc.).**
2. **The vehicle is not driven regularly and/or only driven short distances.**

In these cases, the battery may need to be charged to maintain battery health.

REMOTE ENGINE START

Vehicles started with the Remote Engine Start require the ignition switch to be placed in the ON position before the shift lever can be moved from the P (Park) position. To place the ignition switch in the ON position, follow these steps:

1. Make sure that the Intelligent Key is on you.
2. Apply the brake.
3. Push the ignition switch once to the ON position.

For additional information, see "NISSAN Intelligent Key®" (P. 3-7).

CONTINUOUSLY VARIABLE TRANSMISSION (CVT)

⚠ WARNING

- **Do not depress the accelerator pedal while shifting from P (Park) or N (Neutral) to R (Reverse), D (Drive), L (Low) or manual shift mode (if so equipped). Always depress the brake pedal until shifting is completed. Failure to do so could cause you to lose control and have an accident.**
- **Cold engine idle speed is high, so use caution when shifting into a forward or reverse gear before the engine has warmed up.**
- **Do not downshift abruptly on slippery roads. This may cause a loss of control.**
- **Never shift to either the P (Park) or R (Reverse) position while the vehicle is moving forward and P (Park) or D (Drive) position while the vehicle is reversing. This could cause an accident or damage the transmission.**

⚠ CAUTION

- **Except in an emergency, do not shift to the N (Neutral) position while driving. Coasting with the transmission in the N (Neutral) position may cause serious damage to the transmission.**
- **To avoid possible damage to your vehicle, when stopping the vehicle on an uphill grade, do not hold the vehicle by depressing the accelerator pedal. The foot brake should be used for this purpose.**

The CVT in your vehicle is electronically controlled to produce maximum power and smooth operation.

Follow these procedures for maximum vehicle performance and driving enjoyment.

NOTE:

Engine power may be automatically reduced to protect the CVT if the engine speed increases quickly when driving on slippery roads or while being tested on some dynamometers.

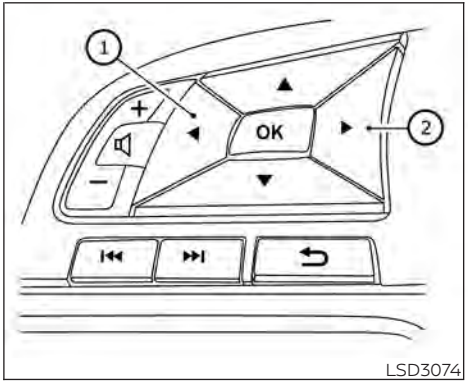

LSD3074

Starting the vehicle

1. After starting the engine, fully depress the foot brake pedal before moving the shift lever out of the P (Park) position. **The Continuously Variable Transmission is designed so the foot brake pedal MUST be depressed before shifting from P (Park) to any drive position while the ignition switch is in the ON position. The shift lever cannot be moved out of P (Park) and into any of the other gear positions if the ignition switch is placed in the LOCK position.**

2. A screen is displayed for a period of time that indicates the status of the driving aid functions (if so equipped).
   - AEB with Pedestrian Detection, LDW, and BSW are enabled when the specified driving aid is shaded.
   - I-LI is enabled when the driving aid is solid.
   - Use the ① ◄ or ② ► button to navigate the settings screen. For additional information, see "How to use the vehicle information display" (P. 2-19) or (P. 2-35)
3. Keep the foot brake pedal depressed and move the shift lever to a driving position.
4. Release the foot brake, then gradually start the vehicle in motion.
5. Stop the vehicle completely before moving the shift lever to the P (Park) position.

⚠ WARNING

- **Do not depress the accelerator pedal while shifting from P (Park) or N (Neutral) to R (Reverse), D (Drive), L (Low) or manual shift mode (if so equipped). Always depress the brake pedal until shifting is completed. Failure to do so could cause you to lose control and have an accident.**
- **Cold engine idle speed is high, so use caution when shifting into a forward or reverse gear before the engine has warmed up.**
- **Do not downshift abruptly on slippery roads. This may cause a loss of control.**
- **Never shift to either the P (Park) or R (Reverse) position while the vehicle is moving forward and P (Park) or D (Drive) position while the vehicle is reversing. This could cause an accident or damage the transmission.**

⚠ CAUTION

- **Except in an emergency, do not shift to the N (Neutral) position while driving. Coasting with the transmission in the N (Neutral) position may cause serious damage to the transmission.**
- **To avoid possible damage to your vehicle, when stopping the vehicle on an uphill grade, do not hold the vehicle by depressing the accelerator pedal. The foot brake should be used for this purpose.**

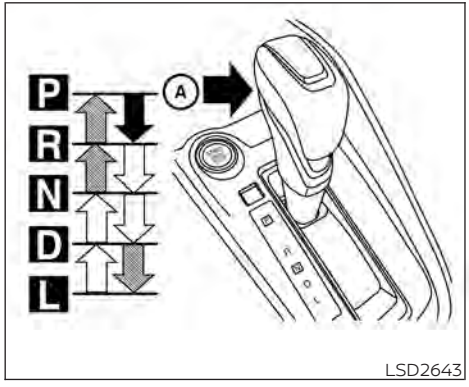

LSD2643

Shifting

To move the shift lever:

- Press the button Ⓐ while depressing the brake pedal
- Press the button Ⓐ to shift
- Shift without pressing the button Ⓐ

After starting the engine, fully depress the brake pedal and move the shift lever from P (Park) to any of the desired shift positions.

⚠ WARNING

Apply the parking brake if the shift lever is in any position while the engine is not running. Failure to do so could cause the vehicle to move unexpectedly or roll away and result in serious personal injury or property damage.

P (Park)

⚠ CAUTION

To prevent transmission damage, use the P (Park) or R (Reverse) position only when the vehicle is completely stopped.

Use the P (Park) shift lever position when the vehicle is parked or when starting the engine. Make sure the vehicle is completely stopped. **The brake pedal should be depressed to move the shift lever from N (Neutral) or any drive position to P (Park).** Apply the parking brake. When parking on a hill, apply the parking brake first, then move the shift lever into the P (Park) position.

R (Reverse)

⚠ CAUTION

To prevent transmission damage, use the P (Park) or R (Reverse) position only when the vehicle is completely stopped.

Use the R (Reverse) position to back up. Make sure the vehicle is completely stopped before selecting the R (Reverse) position. **The brake pedal must be depressed to move the shift lever from P (Park), N (Neutral) or any drive position to R (Reverse).**

N (Neutral)

Neither forward nor reverse gear is engaged. The engine can be started in this position. You may shift to N (Neutral) and restart a stalled engine while the vehicle is moving.

D (Drive)

Use this position for all normal forward driving.

L (Low)

Use this position for engine braking on steep downhill gradients/climbing steep slopes and whenever approaching sharp bends. Do not use the L (Low) position in any other circumstances.

Manual shift mode (if so equipped)

When the shift lever is in the D (Drive) position and the drive sport mode switch is pushed, the transmission is ready for the manual shift mode. Shift ranges can be selected manually by pulling the right-side or left-side paddle shifter.

When shifting up, pull the right side paddle shifter (+) Ⓑ. The transmission shifts to the higher range.

When shifting down, pull the left side paddle shifter (–) Ⓐ. The transmission shifts to the lower range.

When canceling the manual shift mode, push the drive sport mode switch. The transmission returns to the normal driving mode. When you pull the paddle shifter while in the D (Drive) position with the drive sport mode switch pushed, the transmission will shift to the upper or lower range temporarily. The transmission will automatically return to the drive sport mode after a short period of time. If you want to return to the drive sport mode manually, pull and hold the paddle shifter for about 1.5 seconds.

In the manual shift mode, the shift range is displayed on the position indicator in the meter.

Shift ranges up or down one by one as follows:

1⇔ 2 ⇔ 3 ⇔ 4 ⇔ 5 ⇔ 6 ⇔ 7 ⇔ 8

M8 (8th) and M7 (7th)

Use this position for all normal forward driving at highway speeds.

M6 (6th) and M5 (5th)

Use this position when driving up long slopes or for engine braking when driving down long slopes.

M4 (4th), M3 (3rd) and M2 (2nd)

Use for hill climbing or engine braking on downhill grades.

M1 (1st)

Use this position when climbing steep hills slowly or driving slowly through deep snow, sand or mud, or for maximum engine braking on steep downhill grades.

- Remember not to drive at high speeds for extended periods of time in lower than the 8th range. This reduces fuel economy.

When shifting up

Use the + (up) side paddle shifter. (Shifts to higher range.)

When shifting down

Use the – (down) side paddle shifter. (Shifts to lower range.)

When canceling the manual shift mode

To cancel manual shift mode, push the drive sport mode switch on the shift lever or press and hold either paddle shifter.

- **In the manual shift mode, the transmission may not shift to the selected gear. This helps maintain driving performance and reduces the chance of vehicle damage or loss of control.**
- **In the manual shift mode, the transmission may shift up automatically to a higher range than selected if the engine speed is too high. When the vehicle speed decreases, the transmission automatically shifts down and shifts to 1st gear before the vehicle comes to a stop.**
- Continuously Variable Transmission (CVT) operation is limited to automatic drive mode when CVT fluid temperature is extremely low even if manual shift mode is selected. This is not a malfunction. When CVT fluid warms up, manual mode can be selected.
- When the CVT fluid temperature is high, the shift range may upshift in lower rpm than usual. This is not a malfunction.

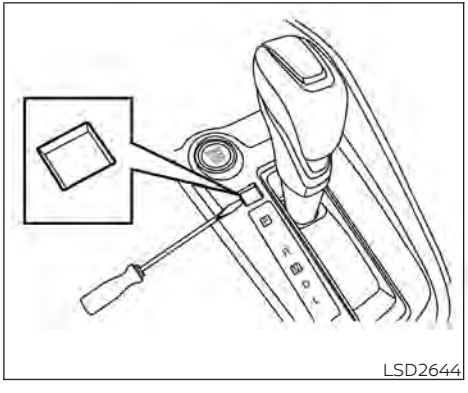

Shift lock release

If the battery charge is low or discharged, the shift lever may not be moved from the P (Park) position even with the brake pedal depressed and the shift lever button pressed.

It will be necessary to jump start or have your battery charged. For additional information, see "Jump starting" (P. 6-17). Contact a NISSAN dealer or a professional towing service.

To move the shift lever, complete the following procedure:

1. Push the ignition switch to the LOCK position.
2. Apply the parking brake.
3. Using a protective cloth on the tip of a 3 mm screwdriver, remove the shift lock release cover.
   - If available, a plastic trim tool can also be used.
4. Insert the small screwdriver in the shift lock release slot and push down.
5. Move the shift lever to the N (Neutral) position while holding down the shift lock release.

If the shift lever cannot be moved out of P (Park), have the transmission checked as soon as possible. It is recommended that you visit a NISSAN dealer for this service.

⚠WARNING

If the shift lever cannot be moved from the P (Park) position while the engine is running and the brake pedal is depressed, the stop lights may not work. Malfunctioning stop lights could cause an accident injuring yourself and others.

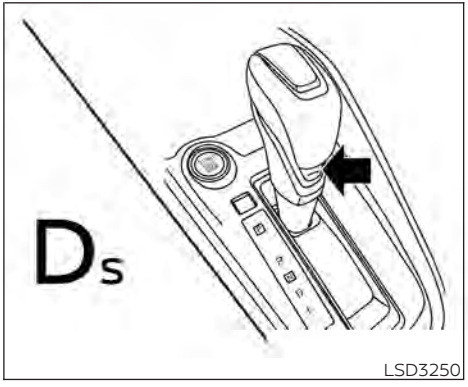

Drive sport mode

Drive sport mode switch

When the drive sport mode switch is pushed with the shift lever in the D (Drive) position, the drive sport mode indicator in the instrument panel illuminates. For additional information, see "Drive sport mode indicator" (P. 2-29) or (P. 2-46)

Use the drive sport mode when you need improved engine braking.

To turn off the drive sport mode, push the drive sport mode switch again. The drive sport mode indicator will turn off.

Each time the engine is started, or when the shift lever is shifted to any position other than D (Drive), the drive sport mode will automatically turn off.

Accelerator downshift — in D (Drive) position —

For passing or hill climbing, depress the accelerator pedal to the floor. This shifts the transmission down into a lower gear, depending on the vehicle speed.

High fluid temperature protection mode

This transmission has a high fluid temperature protection mode. If the fluid temperature becomes too high (for example, when climbing steep grades in high temperatures with heavy loads, such as when towing a trailer), engine power and, under some conditions, vehicle speed will be decreased automatically to reduce the chance of transmission damage. Vehicle speed can be controlled with the accelerator pedal, but the engine and vehicle speed may be limited.

Fail-safe

If the vehicle is driven under extreme conditions, such as excessive wheel spinning and subsequent hard braking, the fail-safe system may be activated. The Malfunction Indicator Light (MIL) may come on to indicate the fail-safe mode is activated. For additional information, see "Malfunction Indicator Light (MIL)" (P. 2-15). This will occur even if all electrical circuits are functioning properly. In this case, place the ignition switch in the OFF position and wait for 10 seconds. Then push the switch back to the ON position. The vehicle should return to its normal operating condition. If it does not return to its normal operating condition, have the transmission checked. It is recommended that you visit a NISSAN dealer for this service.

⚠ WARNING

When the high fluid temperature protection mode or fail-safe operation occurs, vehicle speed may be gradually reduced. The reduced speed may be lower than other traffic, which could increase the chance of a collision. Be especially careful when driving. If necessary, pull to the side of the road at a safe place and allow the transmission to return to normal operation, or have it repaired if necessary.

⚠ WARNING

- **Be sure the parking brake is fully released before driving. Failure to do so can cause brake failure and lead to an accident.**
- **Do not release the parking brake from outside the vehicle.**
- **Do not use the shift lever in place of the parking brake. When parking, be sure the parking brake is fully engaged.**
- **To help avoid risk of injury or death through unintended operation of the vehicle and/or its systems, do not leave children, people who require the assistance of others or pets unattended in your vehicle. Additionally, the temperature inside a closed vehicle on a warm day can quickly become high enough to cause a significant risk of injury or death to people and pets.**

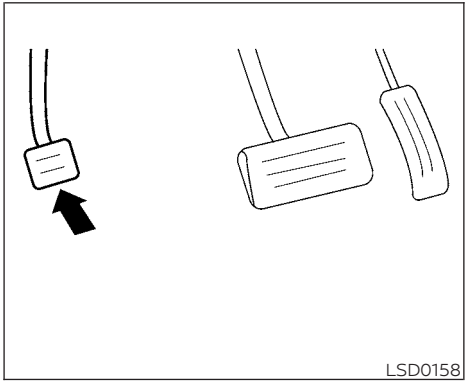
LSD0158

MANUAL PARKING BRAKE (pedal type)

To engage: Firmly depress the parking brake.

To release:

1. Firmly apply the foot brake.
2. Move the shift lever to the P (Park) position.
3. Firmly depress the parking brake pedal and it will release.
4. Before driving, be sure the brake warning light goes out.

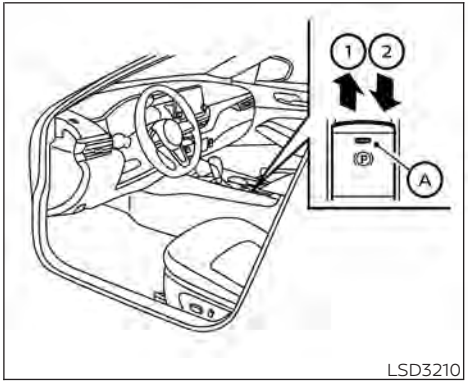

LSD3210

ELECTRONIC PARKING BRAKE (switch type)

The electronic parking brake can be applied or released automatically or by operating the parking brake switch.

Automatic operation

The electronic parking brake will apply automatically if the ignition switch is placed in the OFF position when the brake force is maintained by the automatic brake hold function.

The electronic parking brake is automatically released as soon as the vehicle starts and the accelerator pedal is depressed with the driver's seat belt fastened.

⚠ WARNING

Before leaving the vehicle, move the shift lever to the P (Park) position and check that the electronic parking brake warning light is illuminated to confirm that the electronic parking brake is applied. The electronic parking brake warning light will remain on for a period of time after the driver's door is locked.

⚠ CAUTION

When parking in an area where the outside temperature is below 32°F (0°C), the parking brake, if applied, may freeze in place and may be difficult to release.

For safe parking, it is recommended that you place the shift lever in the P (Park) position and securely block the wheels.

NOTE:

- **To keep the electronic parking brake released after the engine is turned off, place the ignition switch in the OFF position, depress the brake pedal and push down the parking brake switch before opening the driver's door.**
- **If a malfunction occurs in the electronic parking brake system (for example, due to battery discharge), it is recommended that you visit a NISSAN dealer.**
- **If the shift lever is moved to the P (Park) position when the brake force is maintained by the automatic brake hold function, the electronic parking brake will apply automatically.**
- **If the driver's seat belt is unfastened when the brake force is maintained by the automatic brake hold function, the electronic parking brake will apply automatically.**
- **If the ignition switch is placed in the OFF position when the brake force is maintained by the automatic brake hold function, the electronic parking brake will apply automatically.**

Manual operation

The electronic parking brake will not be automatically applied if the engine is stopped without using the ignition switch (for example, by engine stalling). In such a case, you have to apply the parking brake manually.

To apply: Pull the switch up ①. The indicator light Ⓐ will illuminate.

To release: With the ignition switch in the ON position, depress the brake pedal and push the switch down ②. The indicator light Ⓐ will turn off.

Before driving, check that the electronic parking brake indicator light (Ⓟ or PARK) goes out. For additional information, see "Warning lights, indicator lights and audible reminders" (P. 2-9).

NOTE:

- **A buzzer will sound if the vehicle is driven without releasing the parking brake. For additional information, see "Warning lights, indicator lights and audible reminders" (P. 2-9).**

- **While the electronic parking brake is applied or released, an operating sound is heard from the lower side of the rear seat. This is normal and does not indicate a malfunction.**
- **When the electronic parking brake is frequently applied and released in a short period of time, the parking brake may not operate in order to prevent the parking brake system from overheating. If this occurs, operate the electronic parking brake switch again after waiting approximately 1 minute.**
- **If the electronic parking brake must be applied while driving in an emergency, pull up and hold the parking brake switch. When you release the parking brake switch, the parking brake will be released.**
- **While pulling up the electronic parking brake switch during driving, the parking brake is applied and a chime sounds. The electronic parking brake indicator light in the meter and in the parking brake switch illuminates. This does not indicate a malfunction. The electronic parking brake indicator light in the meter and in the parking brake switch turns off when the parking brake is released.**
- **When pulling the electronic parking brake switch up with the ignition switch in the OFF or AUTO ACC position, the parking brake switch indicator light will continue to illuminate for a short period of time.**

AUTOMATIC BRAKE HOLD (if so equipped)

The automatic brake hold function maintains the braking force without the driver having to depress the brake pedal when the vehicle is stopped at a traffic light or intersection. As soon as the driver depresses the accelerator pedal again, the automatic brake hold function is deactivated and the braking force is released. The operating status of the automatic brake hold can be displayed on the vehicle information display.

⚠ WARNING

- **The automatic brake hold function is not designed to hold the vehicle on a steep hill or slippery road. Never use the automatic brake hold when the vehicle is stopped on a steep hill or slippery road. Failure to do so may cause the vehicle to move.**
- **When the automatic brake hold function is activated but fails to maintain the vehicle at a standstill, depress the brake pedal to stop the vehicle. If the vehicle unexpectedly moves due to outside conditions, the chime may sound and automatic brake hold warning may illuminate in the vehicle information display.**

- **Be sure to deactivate the automatic brake hold function when using a car wash or towing your vehicle.**
- **Make sure to place the shift lever in the P (Park) position and apply the parking brake when parking your vehicle, entering or exiting the vehicle, or loading luggage. Failure to do so could cause the vehicle to move or roll away unexpectedly and result in serious personal injury or property damage.**
- **If any of the following conditions occur, the automatic brake hold function may not function. Have the system checked promptly. It is recommended that you visit a NISSAN dealer for this service. Failure to operate the vehicle in accordance with these conditions could cause the vehicle to move or roll away unexpectedly and result in serious personal injury or property damage.**
  - **A warning message appears in the vehicle information display.**
  - **The indicator light on the automatic brake hold switch does not illuminate when the switch is pushed.**
- **The automatic brake hold function will not be activated if the slip indicator light, electronic parking brake warning light or master warning light illuminate and the chassis control system fault message appears in the vehicle information display.**
- **To maintain the braking force to keep the vehicle to a standstill, a noise may be heard. This is not a malfunction.**

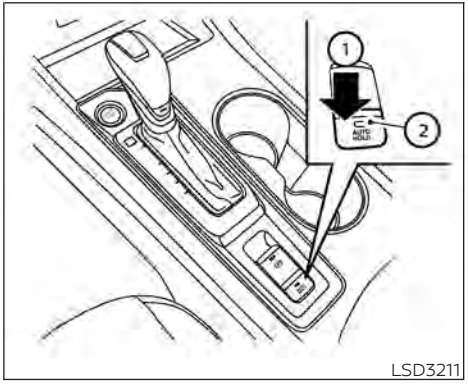

LSD3211

HOW TO ACTIVATE/DEACTIVATE THE AUTOMATIC BRAKE HOLD FUNCTION

For additional information on activating and deactivating the automatic brake hold function, refer to the instructions outlined in this section.

How to activate the automatic brake hold function

1. With the ignition switch in the ON position, push the automatic brake hold switch ①. The indicator light on the automatic brake hold switch ② illuminates.
2. When the automatic brake hold function goes into standby, the automatic brake hold indicator light (white) illuminates.

To use the automatic brake hold function, the following conditions need to be met:

- The driver's seat belt is fastened.
- The electronic parking brake is released.
- The shift lever is not in the P (Park) position.
- The vehicle is not parked on a steep hill.

NOTE:

The automatic brake hold function resets to OFF every time the ignition switch is switched from the OFF position to the ON position.

How to deactivate the automatic brake hold function

While the automatic brake hold function is activated, push the automatic brake hold switch to turn off the automatic brake hold indicator light and deactivate the automatic brake hold function. To deactivate the automatic brake hold function while the brake force has been maintained by the automatic brake hold function, depress the brake pedal and push the automatic brake hold switch.

⚠WARNING

Make sure to firmly depress and hold the brake pedal when turning off the automatic brake hold function while the brake force is applied. When the automatic brake hold function is deactivated, the brake force will be released. This could cause the vehicle to move or roll away unexpectedly. Failure to prevent the vehicle from rolling may result in serious personal injury or property damage.

HOW TO USE THE AUTOMATIC BRAKE HOLD FUNCTION

For additional information on using the automatic brake hold function, refer to the instructions outlined in this section.

To maintain braking force automatically

With the automatic brake hold function activated and the automatic brake hold indicator light (white) illuminated on the meter, depress the braking pedal to stop the vehicle. The brake force is automatically maintained without your foot depressed on the brake pedal. While the brake hold is maintained, the automatic brake hold indicator light (green) illuminates on the meter.

To start the vehicle from a standstill

With the shift lever not in the P (Park) or N (Neutral) position, depress the accelerator pedal while the brake force is maintained. The brake force will automatically be released to restart the vehicle.

The automatic brake hold indicator light (white) illuminates and the automatic brake hold returns to standby.

Parking

When the shift lever is in the P (Park) position with the brake force maintained by the automatic brake hold function, the parking brake will automatically be applied and the brake force of the automatic brake hold will be released. The automatic brake hold indicator light turns off. When the parking brake is applied with the brake force maintained by the automatic brake hold function, the brake force of the automatic brake hold will be released. The automatic brake hold indicator light turns off.

NOTE:

- **Under the following conditions, the parking brake will automatically be applied and the brake force of the automatic brake hold will be released:**
  - **The braking force is applied by the automatic brake hold function for 3 minutes or longer.**
  - **The driver's seat belt is unfastened.**
  - **The ignition switch is placed in the OFF position.**
  - **If a malfunction occurs in the automatic brake hold function.**
- **When the vehicle stops, but the brake force is not automatically applied, depress the brake pedal firmly until the automatic brake hold indicator light (green) illuminates.**

TRAFFIC SIGN RECOGNITION (TSR) (if so equipped)

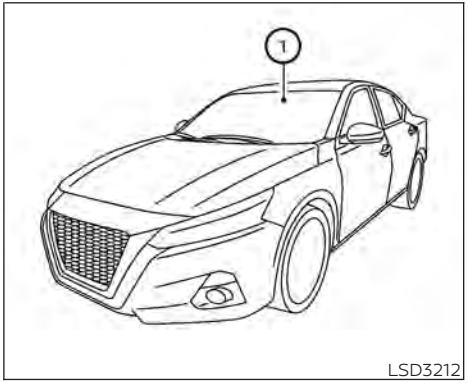

LSD3212

The TSR system provides the driver with information about the most recently detected speed limit. The system captures the road sign information with the multi-sensing front camera unit ① located on the windshield in front of the inside rear-view mirror and displays the detected signs in the vehicle information display. For vehicles equipped with a navigation system, the speed limit displayed is based on a combination of navigation system data and live camera recognition. TSR information is always displayed at the top of the

vehicle information display, and optionally in the main central area of the display screen.

⚠ WARNING

The TSR system is only intended to be a support device to help provide the driver with information. It is not a replacement for the driver's attention to traffic conditions or responsibility to drive safely. It cannot prevent accidents due to carelessness. It is the driver's responsibility to stay alert and drive safely at all times.

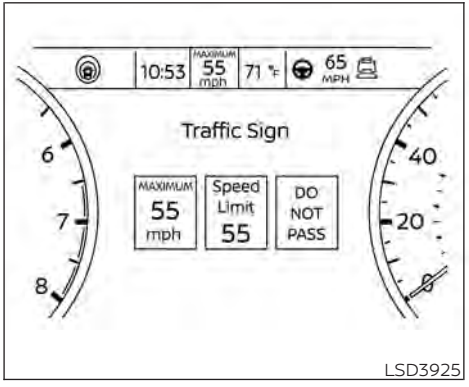

LSD3925

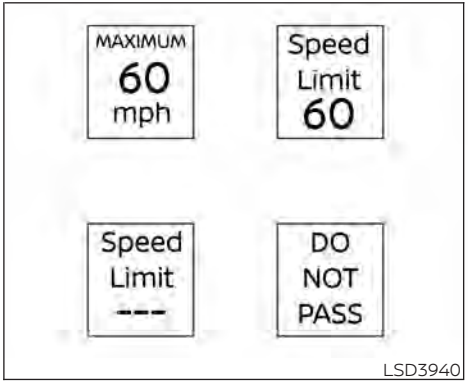

LSD3940

SYSTEM OPERATION

The Traffic Sign Recognition (TSR) system displays the following types of road signs:

⚠ CAUTION

- **The TSR system is intended as an aid to careful driving. It is the driver's responsibility to stay alert, drive safely, and observe all road regulations that currently apply, including looking out for road signs.**
- **The TSR system may not function properly under the following conditions:**
  - **When the road sign is not clearly visible, for example, due to damage or weather conditions.**
  - **When rain, snow or dirt adheres to the windshield in front of the multi-sensing camera unit.**
  - **When the headlights are not bright, for example, due to dirt on the lens or if the aiming is not adjusted properly.**
  - **When strong light enters the camera unit. (For example, the light directly shines on the front of the vehicle at sunrise or sunset.)**

- **When a sudden change in brightness occurs. (For example, when the vehicle enters or exits a tunnel or under a bridge.)**
- **If there are deviations in relation to the navigation, for example due to changes in the road routing.**
- **When overtaking buses or trucks with speed stickers.**

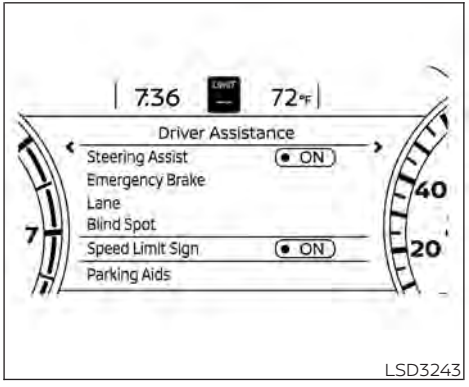

LSD3243

TURNING THE TRAFFIC SIGN RECOGNITION (TSR) SYSTEM ON AND OFF

Perform the following steps to enable or disable the TSR system.

1. Press the ◀▶ button until "Settings" displays in the vehicle information display. Use the ▲▼ button to select "Driver Assistance." Then press the OK button.
2. Select "Speed Limit Sign" and press the OK button to turn the system on or off.

SYSTEM TEMPORARILY UNAVAILABLE

If the vehicle is parked in direct sunlight under high temperature conditions (over approximately 104°F [40°C]) and then started, the TSR system may be deactivated automatically. The "Unavailable: High Cabin Temperature" warning message will appear in the vehicle information display.

Action to take:

When the interior temperature is reduced, the TSR system will resume operating automatically.

SYSTEM MALFUNCTION

If the TSR system malfunctions, it will be turned off automatically and the system "Malfunction" warning message will appear in the vehicle information display.

Action to take:

If the TSR "Malfunction" message appears, pull off the road at a safe location and stop the vehicle. Turn the engine off and restart the engine. If the TSR "Malfunction" message continues to appear, have the system checked. It is recommended that you visit a NISSAN dealer for this service.

SYSTEM MAINTENANCE

The TSR system uses the same multi-sensing front camera unit that is used by the Lane Departure Warning (LDW) system, located in front of the interior rearview mirror. For additional information, see "System maintenance" (P. 5-39).

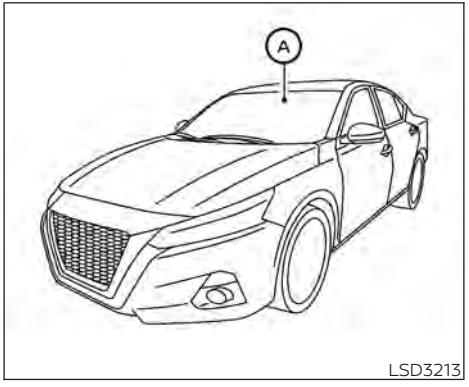

⚠WARNING

Failure to follow the warnings and instructions for proper use of the LDW system could result in serious injury or death.

- **This system is only a warning device to inform the driver of a potential unintended lane departure. It will not steer the vehicle or prevent loss of control. It is the driver's responsibility to stay alert, drive safely, keep the vehicle in the traveling lane, and be in control of the vehicle at all times.**

The LDW system will operate when the vehicle is driven at speeds of approximately 37 mph (60 km/h) and above, and only when the lane markings are clearly visible on the road.

The LDW system monitors the lane markers on the traveling lane using the camera unit Ⓐ located above the inside mirror.

The LDW system warns the driver that the vehicle is beginning to leave the driving lane with an indicator and a steering wheel vibration. For additional information, see "LDW system operation" (P. 5-34).

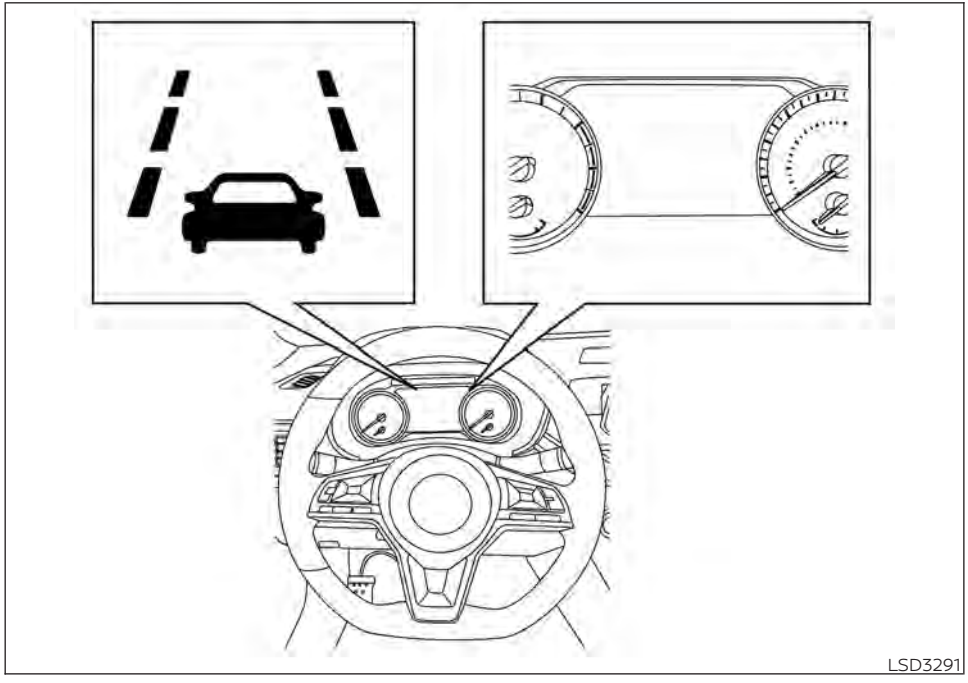

For vehicles with the 7 inch (18 cm) display

LDW SYSTEM OPERATION

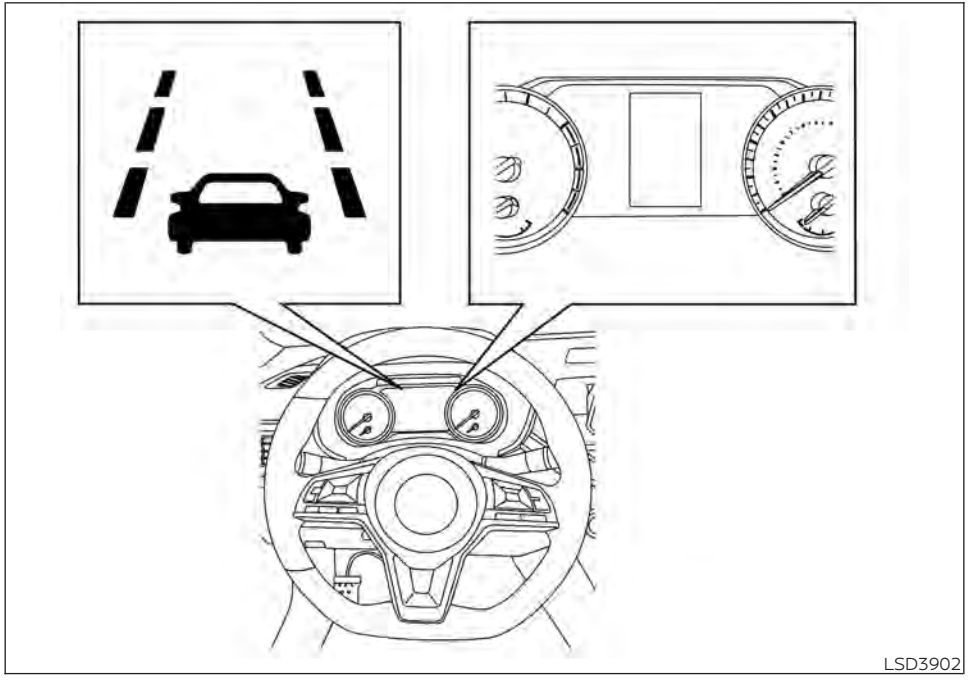

For vehicles with the 5 inch (13 cm) display

The LDW system provides a lane departure warning function when the vehicle is driven at speeds of approximately 37 mph (60 km/h) and above and the lane markings are clear. When the vehicle approaches either the left or the right side of the traveling lane, the steering wheel will vibrate and the LDW indicator on the instrument panel will blink to alert the driver.

The warning function will stop when the vehicle returns inside of the lane markers.

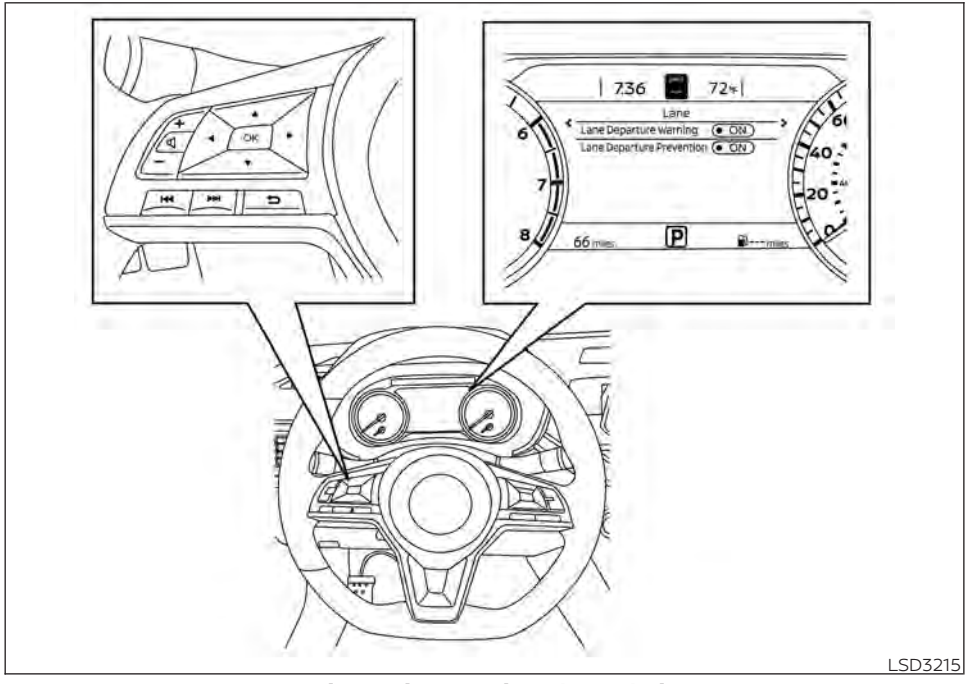

For vehicles with the 7 inch (18 cm) display

HOW TO ENABLE/DISABLE THE LDW SYSTEM

Perform the following steps to enable or disable the LDW system.

For vehicles with the 7 inch (18 cm) display.

1. Press the ◀▶ button until "Settings" displays in the vehicle information display. Use the ▲▼ button to select "Driver Assistance." Then press the OK button.
2. Select "Lane" and press the OK button.
3. Select "Lane Departure Warning" and press the OK button to turn the system on or off.

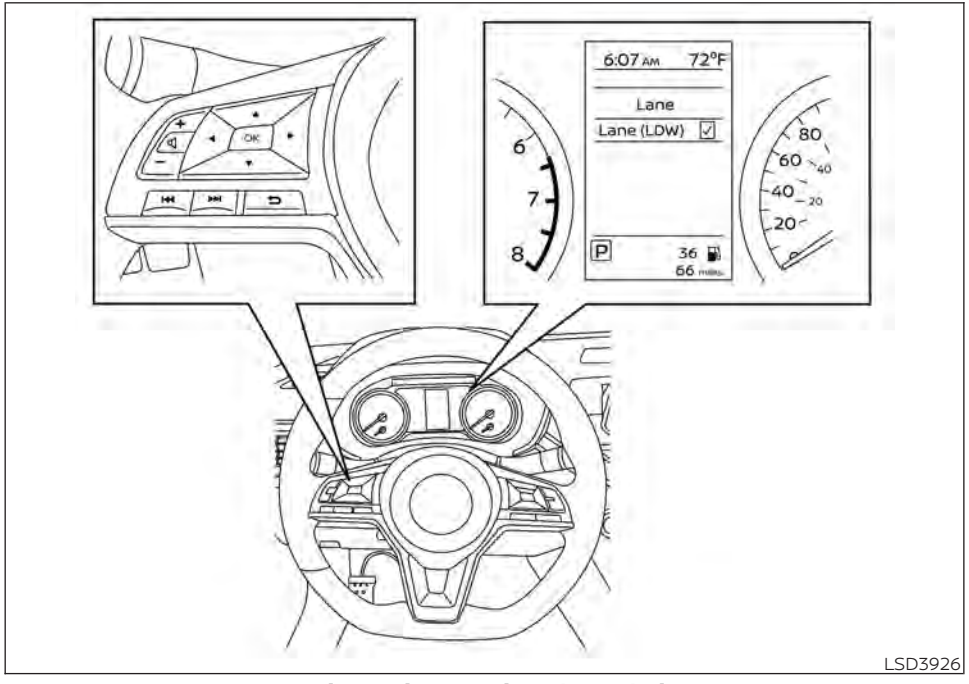

For vehicles with the 5 inch (13 cm) display

For vehicles with the 5 inch (13 cm) display.

1. Press the ◀▶ button until "Settings" displays in the vehicle information display. Use the ▲▼ button to select "Driver Assistance." Then press the OK button.
2. Select "Driving Aids" and press the OK button.
3. Select "Lane" and press the OK button.
4. Select "Lane (LDW)" and press the OK button to turn the system on or off.

LDW SYSTEM LIMITATIONS

⚠ WARNING

Listed below are the system limitations for the LDW system. Failure to follow the warnings and instructions for proper use of the LDW system could result in serious injury or death.

- **The system will not operate at speeds below approximately 37 mph (60 km/h) or if it cannot detect lane markers.**
- **Do not use the LDW system under the following conditions as it may not function properly:**
  - **During bad weather (rain, fog, snow, etc.).**
  - **When driving on slippery roads, such as on ice or snow.**
  - **When driving on winding or uneven roads.**
  - **When there is a lane closure due to road repairs.**
  - **When driving in a makeshift or temporary lane.**
  - **When driving on roads where the lane width is too narrow.**
  - **When driving without normal tire conditions (for example, tire wear, low tire pressure, installation of spare tire, tire chains, nonstandard wheels).**
  - **When the vehicle is equipped with non-original brake parts or suspension parts.**
  - **When you are towing a trailer or other vehicle.**
- **The system may not function properly under the following conditions:**
  - **On roads where there are multiple parallel lane markers; lane markers that are faded or not painted clearly; yellow painted lane markers; non-standard lane markers; or lane markers covered with water, dirt, snow, etc.**
  - **On roads where the discontinued lane markers are still detectable.**
  - **On roads where there are sharp curves.**
  - **On roads where there are sharply contrasting objects, such as shadows, snow, water, wheel ruts, seams or lines remaining after road repairs. (The LDW system could detect these items as lane markers.)**
  - **On roads where the traveling lane merges or separates.**
  - **When the vehicle's traveling direction does not align with the lane marker.**
  - **When traveling close to the vehicle in front of you, which obstructs the lane camera unit detection range.**
  - **When rain, snow, dirt or an object adheres to the windshield in front of the lane camera unit.**
  - **When the headlights are not bright due to dirt on the lens or if the aiming is not adjusted properly.**
  - **When strong light enters the lane camera unit. (For example, the light directly shines on the front of the vehicle at sunrise or sunset.)**
  - **When a sudden change in brightness occurs. (For example, when the vehicle enters or exits a tunnel or under a bridge.)**

SYSTEM TEMPORARILY UNAVAILABLE

If the vehicle is parked in direct sunlight under high temperature conditions (over approximately 104°F [40°C]) and then started, the LDW system may be deactivated automatically and the following message will appear in the vehicle information display: "Unavailable: High Cabin Temperature" or "Not available High cabin temperature".

When the interior temperature is reduced, the LDW system will resume operating automatically.

The LDW system is not designed to warn under the following conditions:

- When you operate the lane change signal and change traveling lanes in the direction of the signal. (The LDW system will become operable again approximately 2 seconds after the lane change signal is turned off.)
- When the vehicle speed lowers to less than approximately 37 mph (60 km/h).

After the above conditions have finished and the necessary operating conditions are satisfied, the LDW functions will resume.

SYSTEM MALFUNCTION

If the LDW system malfunctions, it will cancel automatically and "Not Available System Malfunction" or "System fault" will appear in the vehicle information display. If "Not Available System Malfunction" or "System fault" appears in the vehicle information display, pull off the road to a safe location and stop the vehicle. Place the shift lever in the P (Park) position and the ignition switch in the OFF position and restart the engine/motor. If "Not Available System Malfunction" or "System fault" continues to appear in the vehicle information display, have the system checked. It is recommended that you visit a NISSAN dealer for this service.

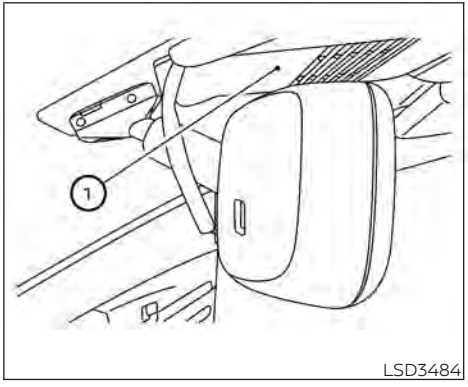

LSD3484

SYSTEM MAINTENANCE

The lane camera unit ① for the LDW system is located above the inside mirror. To keep the proper operation of the LDW system and prevent a system malfunction, be sure to observe the following:

- Always keep the windshield clean.
- Do not attach a sticker (including transparent material) or install an accessory near the camera unit.

- Do not place reflective materials, such as white paper or a mirror, on the instrument panel. The reflection of sunlight may adversely affect the camera unit's capability of detecting the lane markers.
- Do not strike or damage the areas around the camera unit. Do not touch the camera lens or remove the screw located on the camera unit. If the camera unit is damaged due to an accident, it is recommended that you visit a NISSAN dealer.

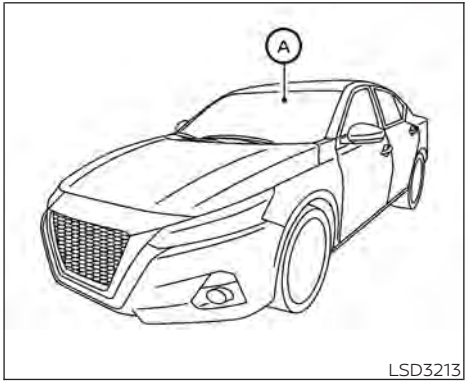

⚠WARNING

Failure to follow the warnings and instructions for proper use of the I-LI system could result in serious injury or death.

- **The I-LI system will not steer the vehicle or prevent loss of control. It is the driver's responsibility to stay alert, drive safely, keep the vehicle in the traveling lane, and be in control of the vehicle at all times.**
- **The I-LI system is primarily intended for use on well-developed freeways or highways. It may not detect the lane markers in certain road, weather, or driving conditions.**

The I-LI system must be turned on with the ProPILOT Assist switch (for vehicles with ProPILOT Assist) on the steering wheel, every time the ignition is placed in the ON position.

The I-LI system will operate when the vehicle is driven at speeds of approximately 37 mph (60 km/h) and above, and only when the lane markings are clearly visible on the road.

The I-LI system warns the driver when the vehicle has left the center of the traveling lane with an indicator and a steering wheel vibration. The system helps assist the driver to return the vehicle to the center of the traveling lane by applying the brakes to the left or right wheels individually (for a short period of time).

The I-LI system monitors the lane markers on the traveling lane using the camera unit Ⓐ located above the inside mirror.

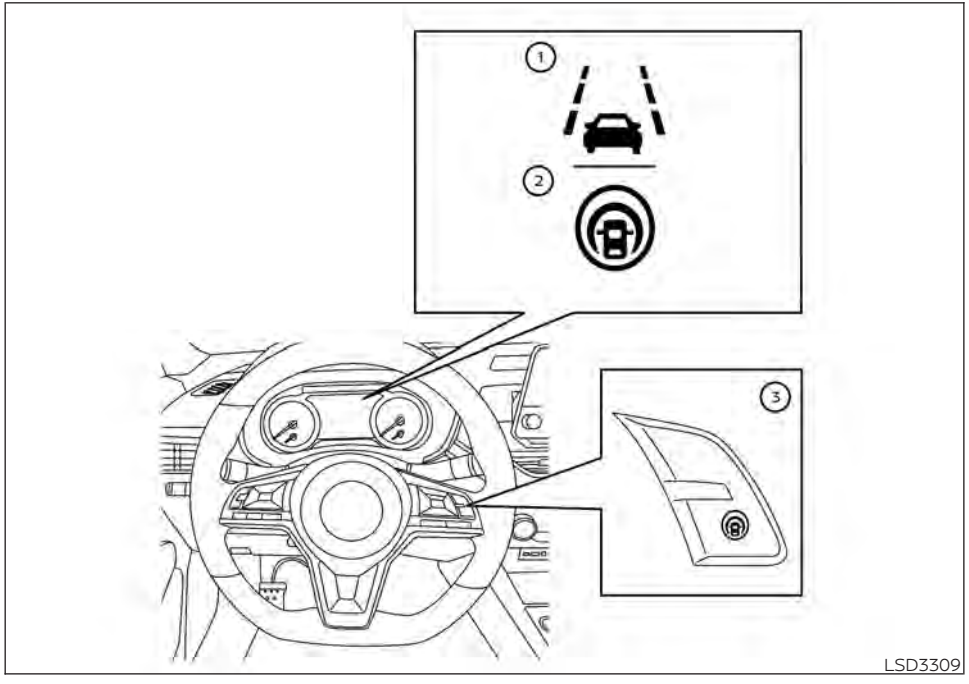

I-LI SYSTEM OPERATION

① Lane Departure Warning (LDW) indicator

② Intelligent Lane Intervention (I-LI) indicator (if so equipped)

③ ProPILOT Assist switch (for vehicles with ProPILOT Assist)

The I-LI system operates above approximately 37 mph (60 km/h). When the vehicle approaches either the left or the right side of the traveling lane, the steering wheel will vibrate and the LDW indicator (orange) on the instrument panel will blink to alert the driver. Then, the I-LI system will automatically apply the brakes for a short period of time to help assist the driver to return the vehicle to the center of the traveling lane.

To turn on the I-LI system, push the ProPILOT Assist switch (for vehicles with ProPILOT Assist) on the steering wheel after starting the engine/motor. The I-LI indicator on the instrument panel will illuminate. Push the ProPILOT Assist switch again to turn off the I-LI system. The I-LI indicator will turn off.

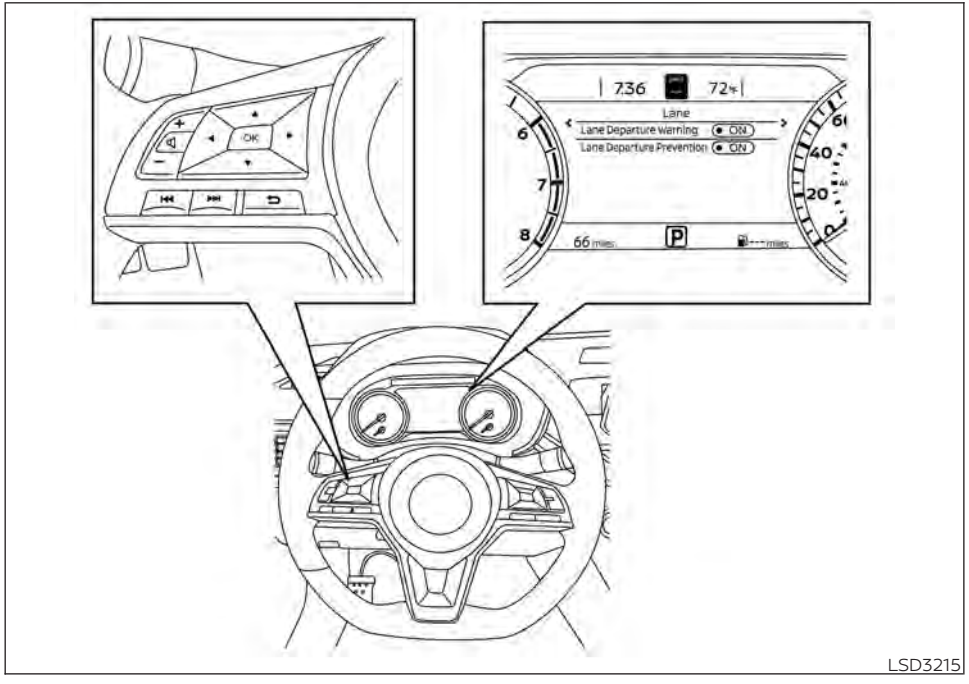

HOW TO ENABLE/DISABLE THE I-LI SYSTEM

Perform the following steps to enable or disable the I-LI system.

1. Press the ◀▶ button until "Settings" displays in the vehicle information display. Use the ▲▼ button to select "Driver Assistance." Then press the OK button.
2. Select "Lane" and press the OK button.
3. Select "Lane Departure Prevention" and press the OK button.
4. Push the ProPILOT Assist switch to turn the system on or off.

NOTE:

When Lane Departure Prevention is enabled in the settings menu, turning the ProPILOT Assist system (if so equipped) on will activate the I-LI system at the same time. If Lane Departure Prevention is not enabled in the settings menu, I-LI will automatically activate when the ProPILOT Assist system is "SET." For additional information, see "Intelligent Lane Intervention (I-LI)" (P. 5-40).

I-LI SYSTEM LIMITATIONS

⚠ WARNING

Listed below are the system limitations for the I-LI system. Failure to follow the warnings and instructions for proper use of the I-LI system could result in serious injury or death.

- **The I-LI system may activate if you change lanes without first activating your turn signal or, for example, if a construction zone directs traffic to cross an existing lane marker. If this occurs you may need to apply corrective steering to complete your lane change.**
- **Because the I-LI may not activate under the road, weather, and lane marker conditions described in this section, it may not activate every time your vehicle begins to leave its lane and you will need to apply corrective steering.**
- **When the I-LI system is operating, avoid excessive or sudden steering maneuvers. Otherwise, you could lose control of the vehicle.**
- **The I-LI system will not operate at speeds below approximately 37 mph (60 km/h) or if it cannot detect lane markers.**
- **Do not use the I-LI system under the following conditions as it may not function properly:**
  - **During bad weather (rain, fog, snow, etc.).**
  - **When driving on slippery roads, such as on ice or snow.**
  - **When driving on winding or uneven roads.**
  - **When there is a lane closure due to road repairs.**
  - **When driving in a makeshift or temporary lane.**
  - **When driving on roads where the lane width is too narrow.**
  - **When driving without normal tire conditions (for example, tire wear, low tire pressure, installation of spare tire, tire chains, non-standard wheels).**
  - **When the vehicle is equipped with nonoriginal brake parts or suspension parts.**
  - **When you are towing a trailer or other vehicle.**
  - **On roads where there are multiple parallel lane markers; lane markers that are faded or not painted clearly; yellow painted lane markers; non-standard lane markers; or lane markers covered with water, dirt, snow, etc.**
  - **On roads where discontinued lane markers are still detectable.**
  - **On roads where there are sharp curves.**
  - **On roads where there are sharply contrasting objects, such as shadows, snow, water, wheel ruts, seams or lines remaining after road repairs. (The I-LI system could detect these items as lane markers.)**
  - **On roads where the traveling lane merges or separates.**
  - **When the vehicle's traveling direction does not align with the lane marker.**
  - **When traveling close to the vehicle in front of you, which obstructs the lane camera unit detection range.**

- **When rain, snow or dirt adheres to the windshield in front of the lane camera unit.**
- **When the headlights are not bright due to dirt on the lens or if the aiming is not adjusted properly.**
- **When strong light enters the lane camera unit. (For example, the light directly shines on the front of the vehicle at sunrise or sunset.)**
- **When a sudden change in brightness occurs. (For example, when the vehicle enters or exits a tunnel or under a bridge.)**

While the I-LI system is operating, you may hear a sound of brake operation. This is normal and indicates that the I-LI system is operating properly.

SYSTEM TEMPORARILY UNAVAILABLE

Condition A:

The warning and assist functions of the I-LI system are not designed to work under the following conditions:

- When you operate the lane change signal and change the traveling lanes in the direction of the signal. (The I-LI system will be deactivated for approximately 2 seconds after the lane change signal is turned off.)
- When the vehicle speed lowers to less than approximately 37 mph (60 km/h).

After the above conditions have finished and the necessary operating conditions are satisfied, the warning and assist functions will resume.

Condition B:

The assist function of the I-LI system is not designed to work under the following conditions (warning is still functional):

- When the brake pedal is depressed.
- When the steering wheel is turned as far as necessary for the vehicle to change lanes.
- When the vehicle is accelerated during I-LI system operation.
- When the Intelligent Cruise Control (ICC) approach warning occurs.
- When the hazard warning flashers are operated.
- When driving on a curve at high speed.

After the above conditions have finished and the necessary operating conditions are satisfied, the I-LI system application of the brakes will resume.

Condition C:

If the following messages appear in the vehicle information display, the I-LI system will be turned off automatically.

- "Not Available Poor Road Conditions":
  When the VDC system (except Traction Control System [TCS] function) or ABS operates.
- "Currently not available":
  When the VDC system is turned off.

Action to take:

When the above conditions no longer exist, turn off the I-LI system. Push the ProPILOT Assist switch (for vehicles with ProPILOT Assist) on the steering wheel again to turn the I-LI system back on.

Temporary disabled status at high temperature:

If the vehicle is parked in direct sunlight under high temperature conditions (over approximately 104°F [40°C]) and then the I-LI system is turned on, the I-LI system may be deactivated automatically and the following message will appear on the vehicle information display: "Unavailable: High Cabin Temperature." When the interior temperature is reduced, the system will resume operating automatically.

SYSTEM MALFUNCTION

If the I-LI system malfunctions, it will cancel automatically. The LDW indicator (orange) will illuminate in the display. If the LDW indicator (orange) illuminates in the display, pull off the road to a safe location and stop the vehicle. Turn the engine/motor off and restart the engine/motor. If the LDW indicator (orange) continues to illuminate, have the I-LI system checked. It is recommended that you visit a NISSAN dealer for this service.

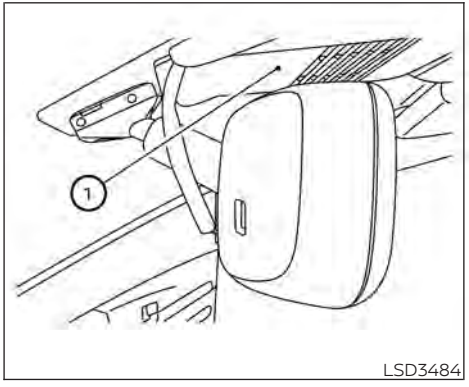

LSD3484

SYSTEM MAINTENANCE

The lane camera unit ① for the I-LI system is located above the inside mirror. To keep the proper operation of the I-LI system and prevent a system malfunction, be sure to observe the following:

- Always keep the windshield clean.
- Do not attach a sticker (including transparent material) or install an accessory near the camera unit.
- Do not place reflective materials, such as white paper or a mirror, on the instrument panel. The reflection of sunlight may adversely affect the camera unit's capability of detecting the lane markers.
- Do not strike or damage the areas around the camera unit. Do not touch the camera lens or remove the screw located on the camera unit. If the camera unit is damaged due to an accident, it is recommended that you visit a NISSAN dealer.

BLIND SPOT WARNING (BSW) (if so equipped)

⚠ WARNING

Failure to follow the warnings and instructions for proper use of the BSW system could result in serious injury or death.

- **The BSW system is not a replacement for proper driving procedures and is not designed to prevent contact with vehicles or objects. When changing lanes, always use the side and rear mirrors and turn and look in the direction your vehicle will move to ensure it is safe to change lanes. Never rely solely on the BSW system.**

The BSW system helps alert the driver of other vehicles in adjacent lanes when changing lanes.

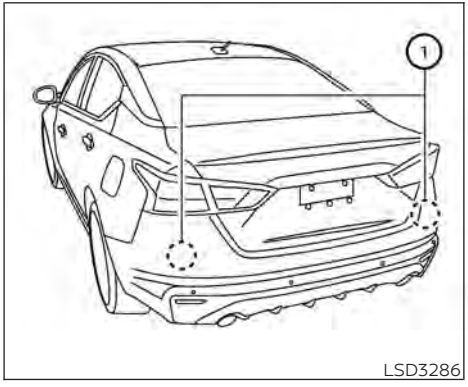

LSD3286

The BSW system uses radar sensors ① installed near the rear bumper to detect other vehicles in an adjacent lane.

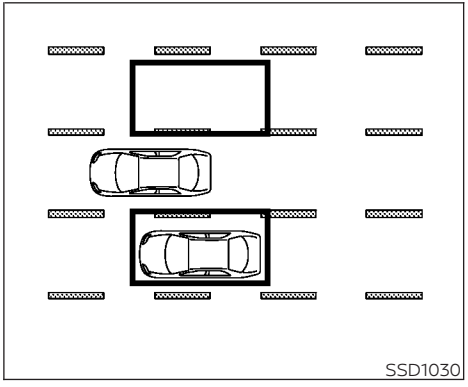
SSD1030

Detection zone

The radar sensors can detect vehicles on either side of your vehicle within the detection zone shown as illustrated. This detection zone starts from the outside mirror of your vehicle and extends approximately 10 ft (3.0 m) behind the rear bumper, and approximately 10 ft (3.0 m) sideways.

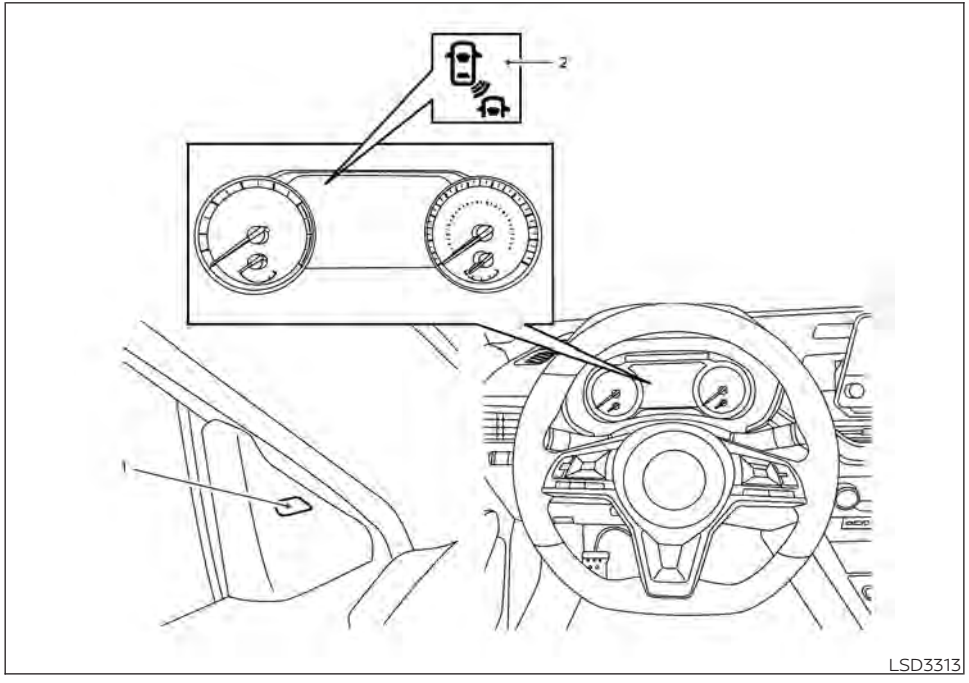

For vehicles with the 7 inch (18 cm) display

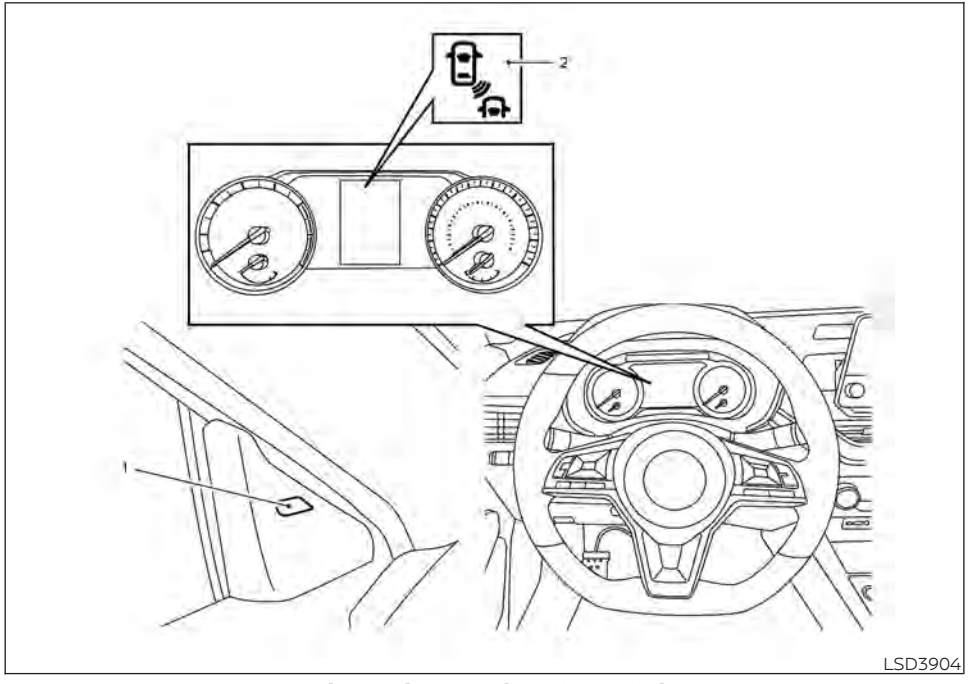

For vehicles with the 5 inch (13 cm) display

1. Side BSW/RCTA Indicator Light
2. BSW indicator

BSW SYSTEM OPERATION

The BSW system operates above approximately 20 mph (32 km/h).

If the radar sensors detect a vehicle in the detection zone, the side BSW/RCTA indicator light (1) illuminates. If the turn signal is then activated, the system chimes (twice), the side BSW/RCTA indicator light flashes and the BSW indicator illuminates (yellow) in the vehicle information display. The side BSW/RCTA indicator light continues to flash until the detected vehicle leaves the detection zone.

The side BSW/RCTA indicator light illuminates for a few seconds when the ignition switch is placed in the ON position.

If a vehicle comes into the detection zone after the driver activates the turn signal, then only the side BSW/RCTA indicator light flashes and no chime sounds. For additional information, see "BSW driving situations" (P. 5-52).

The BSW system automatically turns on every time the engine is started, as long as it is activated using the settings menu on the vehicle information display.

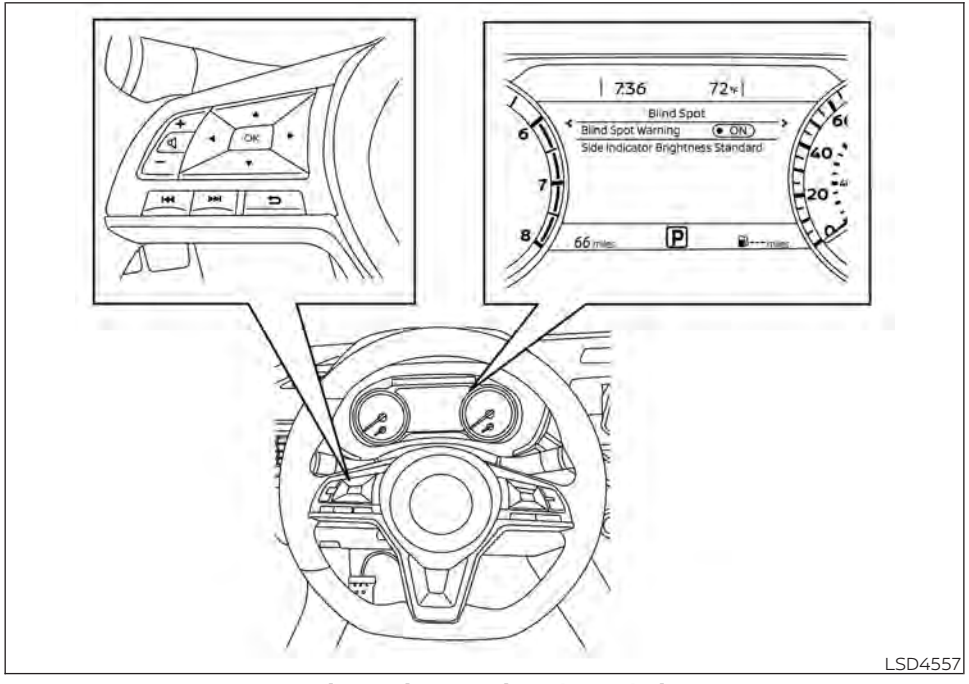

For vehicles with the 7 inch (18 cm) display

HOW TO ENABLE/DISABLE THE BSW SYSTEM

Perform the following steps to enable or disable the BSW system.

For vehicles with the 7 inch (18 cm) display.

1. Press the ◀▶ button until "Settings" displays in the vehicle information display. Use the ▲▼ button to select "Driver Assistance." Then press the OK button.
2. Select "Blind Spot" and press the OK button.
3. Select "Blind Spot Warning" and press the OK button to turn the system on or off.

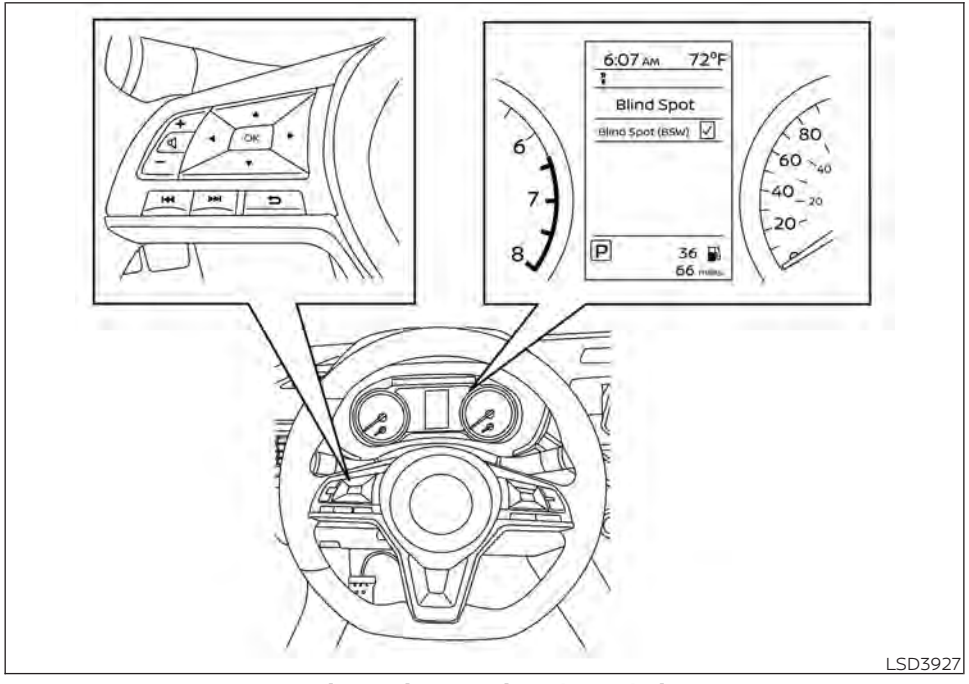

For vehicles with the 5 inch (13 cm) display

For vehicles with the 5 inch (13 cm) display.

1. Press the ◀▶ button until "Settings" displays in the vehicle information display. Use the ▲▼ button to select "Driver Assistance." Then press the OK button.
2. Select "Driving Aids" and press the OK button.
3. Select "Blind Spot" and press the OK button.
4. Select "Blind Spot (BSW)" and press the OK button to turn the system on or off.

NOTE:

When enabling/disabling the system, the system will retain current settings even if the engine is restarted.

BSW SYSTEM LIMITATIONS

⚠ WARNING

Listed below are the system limitations for the BSW system. Failure to operate the vehicle in accordance with these system limitations could result in serious injury or death.

- **The BSW system cannot detect all vehicles under all conditions.**
- **The radar sensors may not be able to detect and activate BSW when certain objects are present such as:**
  - **Pedestrian, bicycles, animals.**
  - **Vehicles such as motorcycles, low height vehicles, or high ground clearance vehicles.**
  - **Oncoming vehicles.**
  - **Vehicles remaining in the detection zone when you accelerate from a stop.**
  - **A vehicle merging into an adjacent lane at a speed approximately the same as your vehicle.**
  - **A vehicle approaching rapidly from behind.**
  - **A vehicle which your vehicle overtakes rapidly.**
  - **A vehicle that passes through the detection zone quickly.**
  - **When overtaking several vehicles in a row, the vehicles after the first vehicle may not be detected if they are traveling close together.**
- **The radar sensors' detection zone is designed based on a standard lane width. When driving in a wider lane, the radar sensors may not detect vehicles in an adjacent lane. When driving in a narrow lane, the radar sensors may detect vehicles driving two lanes away.**
- **The radar sensors are designed to ignore most stationary objects; however, objects such as guardrails, walls, foliage and parked vehicles may occasionally be detected. This is a normal operation condition.**
- **The following conditions may reduce the ability of the radar to detect other vehicles:**
  - **Severe weather**
  - **Road spray**
  - **Ice/frost/snow/dirt build-up on the vehicle**
- **Do not attach stickers (including transparent material), install accessories or apply additional paint near the radar sensors. These conditions may reduce the ability of the radar to detect other vehicles.**
- **Excessive noise (for example, audio system volume, open vehicle window) will interfere with the chime sound, and it may not be heard.**

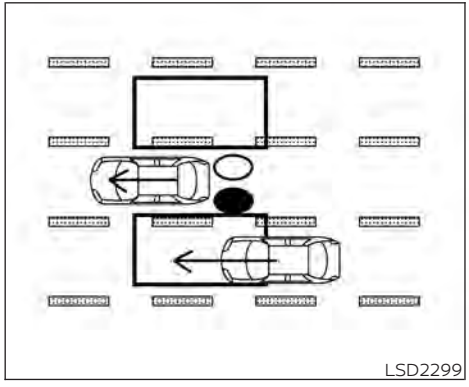

Illustration 1 – Approaching from behind

BSW DRIVING SITUATIONS

Indicator on	●
Indicator off	○
Indicator flashing	◉

Another vehicle approaching from behind

Illustration 1: The side BSW/RCTA indicator light illuminates if a vehicle enters the detection zone from behind in an adjacent lane.

NOTE:

- **The radar sensors may not detect vehicles which are approaching rapidly from behind.**

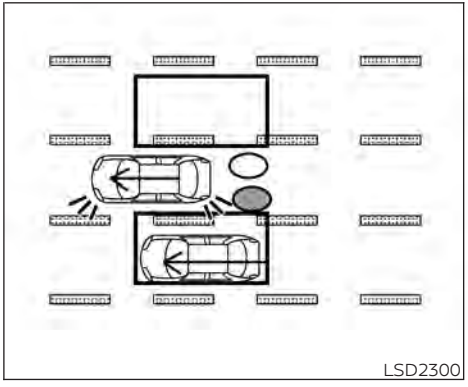

Illustration 2 – Approaching from behind

Illustration 2: If the driver activates the turn signal when another vehicle is in the detection zone, then the system chimes (twice) and the side BSW/RCTA indicator light flashes.

NOTE:

- **The radar sensors may not detect vehicles which are approaching rapidly from behind.**
- **If the driver activates the turn signal before a vehicle enters the detection zone, the side BSW/RCTA indicator light will flash but no chime will sound when the other vehicle is detected.**

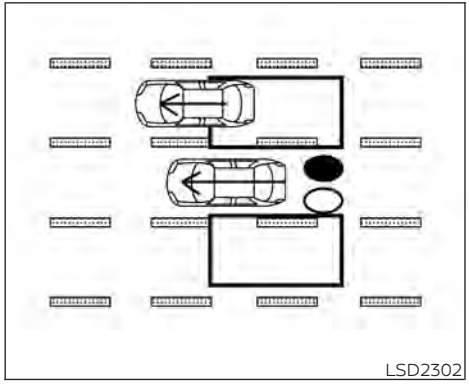

Illustration 3 – Overtaking another vehicle

Overtaking another vehicle

Illustration 3: The side BSW/RCTA indicator light illuminates if you overtake a vehicle and that vehicle stays in the detection zone for approximately 2 seconds.

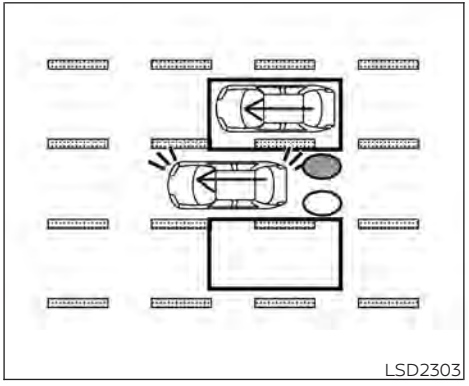

Illustration 4 – Overtaking another vehicle

Illustration 4: If the driver activates the turn signal while another vehicle is in the detection zone, then the system chimes (twice) and the side BSW/RCTA indicator light flashes.

NOTE:

- **When overtaking several vehicles in a row, the vehicles after the first vehicle may not be detected if they are traveling close together.**
- **The radar sensors may not detect slower moving vehicles if they are passed quickly.**
- **If the driver activates the turn signal before a vehicle enters the detection zone, the side BSW/RCTA indicator light will flash but no chime will sound when the other vehicle is detected.**

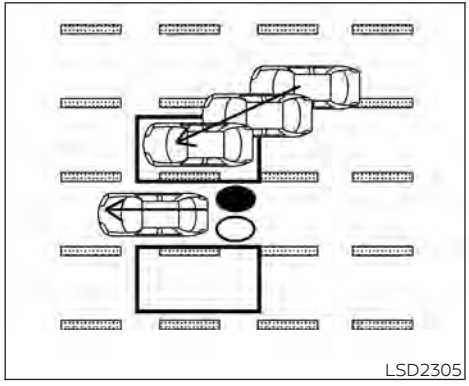

Illustration 5 – Entering from the side

Entering from the side

Illustration 5: The side BSW/RCTA indicator light illuminates if a vehicle enters the detection zone from either side.

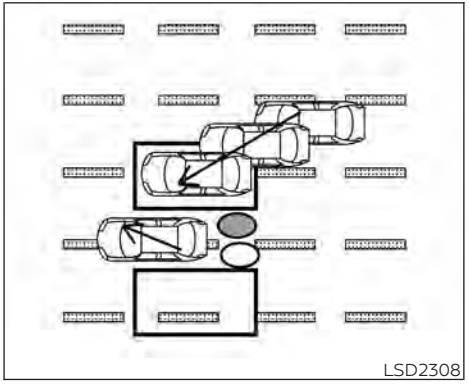

Illustration 6 – Entering from the side

Illustration 6: If the driver activates the turn signal while another vehicle is in the detection zone, then the system chimes (twice) and the side BSW/RCTA indicator light flashes.

NOTE:

- **If the driver activates the turn signal before a vehicle enters the detection zone, the side BSW/RCTA indicator light will flash but no chime will sound when the other vehicle is detected.**
- **The radar sensors may not detect a vehicle which is traveling at about the same speed as your vehicle when it enters the detection zone.**

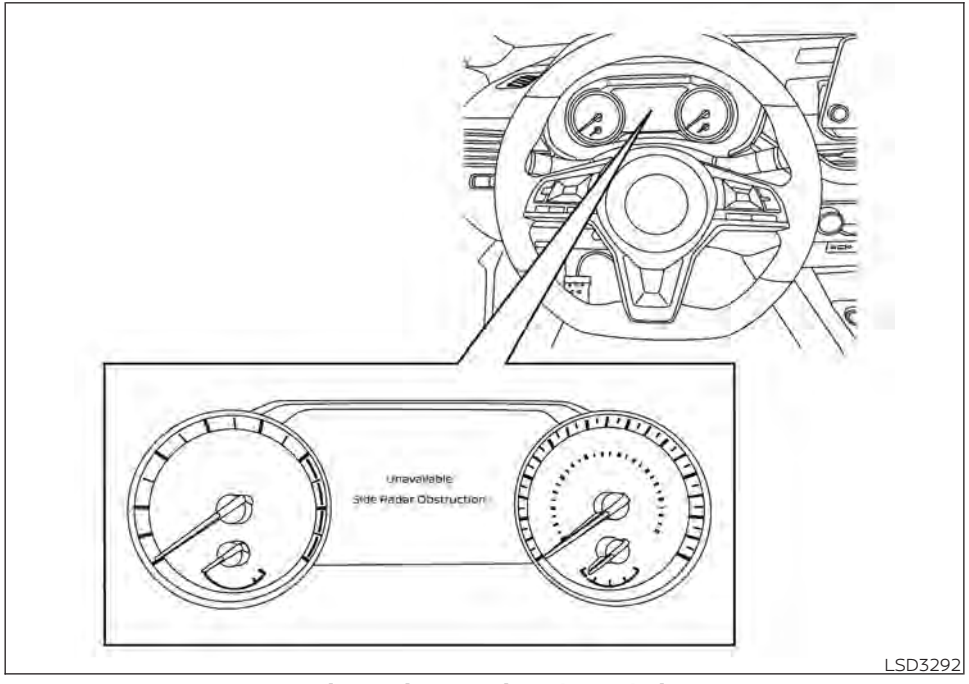

For vehicles with the 7 inch (18 cm) display

SYSTEM TEMPORARILY UNAVAILABLE

When radar blockage is detected, the system will be deactivated automatically. The "Unavailable: Side Radar Obstruction" warning message will appear in the vehicle information display.

The system is not available until the conditions no longer exist.

The radar sensors may be blocked by temporary ambient conditions such as splashing water, mist or fog. The blocked condition may also be caused by objects such as ice, frost or dirt obstructing the radar sensors.

NOTE:

If the BSW system stops working, the RCTA system will also stop working.

Action to take:

When the above conditions no longer exist, the system will resume automatically.

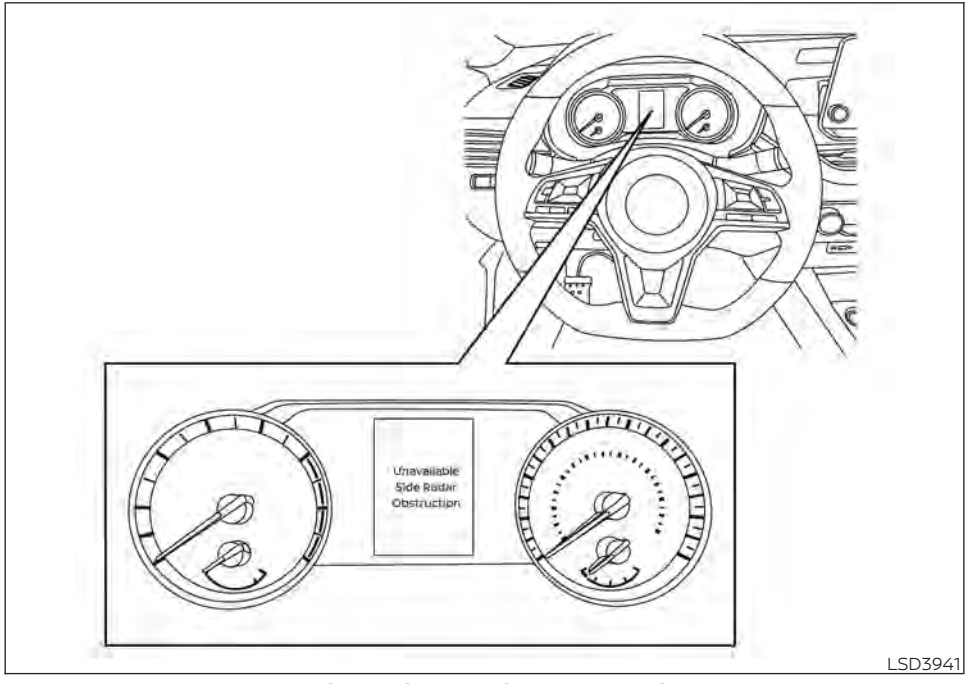

For vehicles with the 5 inch (13 cm) display

Malfunction

If the BSW system malfunctions, it will turn off automatically. The system malfunction warning message with the BSW indicator (orange) will appear in the vehicle information display.

NOTE:

If the BSW system stops working, the RCTA system will also stop working.

Action to take:

Stop the vehicle in a safe location, place the vehicle in the P (Park) position, turn the engine off and restart the engine. If the message continues to appear, have the system checked. It is recommended that you visit a NISSAN dealer for this service.

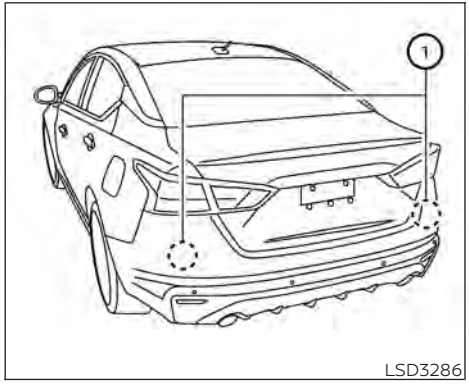

SYSTEM MAINTENANCE

The two radar sensors ① for the BSW and RCTA systems are located near the rear bumper. Always keep the area near the radar sensors clean.

The radar sensors may be blocked by temporary ambient conditions such as splashing water, mist or fog.

The blocked condition may also be caused by objects such as ice, frost or dirt obstructing the radar sensors.

Check for and remove objects obstructing the area around the radar sensors.

Do not attach stickers (including transparent material), install accessories or apply additional paint near the radar sensors.

Do not strike or damage the area around the radar sensors. It is recommended that you visit a NISSAN dealer if the area around the radar sensors is damaged due to a collision.

Radio frequency statement

NOTICE:

This device complies with Part 15 of the FCC Rules.

Operation is subject to the following two conditions:

this device may not cause harmful interference, and

this device must accept any interference received, including interference that may cause undesired operation.

Changes or modifications made to this equipment not expressly approved by (manufacturer name) may void the FCC authorization to operate this equipment.

NOTE:

This equipment has been tested and found to comply with the limits for a Class B digital device, pursuant to Part 15 of the FCC Rules. These limits are designed to provide reasonable protection against harmful interference in a residential installation. This equipment generates, uses and can radiate radio frequency energy and, if not installed and used in accordance with the instructions, may cause harmful interference to radio communications. However, there is no guarantee that interference will not occur in a particular installation. If this equipment does cause harmful interference to radio or television reception, which can be determined by turning the equipment off and on, the user is encouraged to try to correct the interference by one or more of the following measures:

Reorient or relocate the receiving antenna.

Increase the separation between the equipment and receiver.

Connect the equipment into an outlet on a circuit different from that to which the receiver is connected.

Consult the dealer or an experienced radio/TV technician for help.

REAR CROSS TRAFFIC ALERT (RCTA) (if so equipped)

⚠ WARNING

Failure to follow the warnings and instructions for proper use of the RCTA could result in serious injury or death.

- **The RCTA system is not a replacement for proper driving procedures and is not designed to prevent contact with vehicles or objects. When backing out of a parking space, always use the side and rear mirrors and turn and look in the direction your vehicle will move. Never rely solely on the RCTA system.**

The RCTA system will assist you when backing out from a parking space. When the vehicle is in reverse, the system is designed to detect other vehicles approaching from the right or left of the vehicle. If the system detects cross traffic, it will alert you.

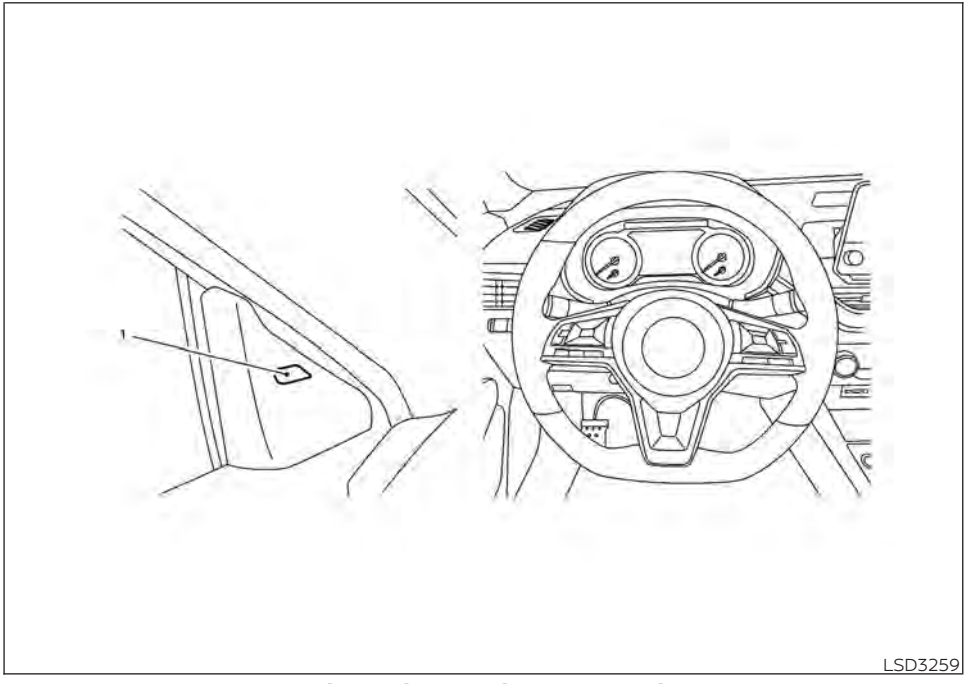

For vehicles with the 7 inch (18 cm) display

RCTA SYSTEM OPERATION

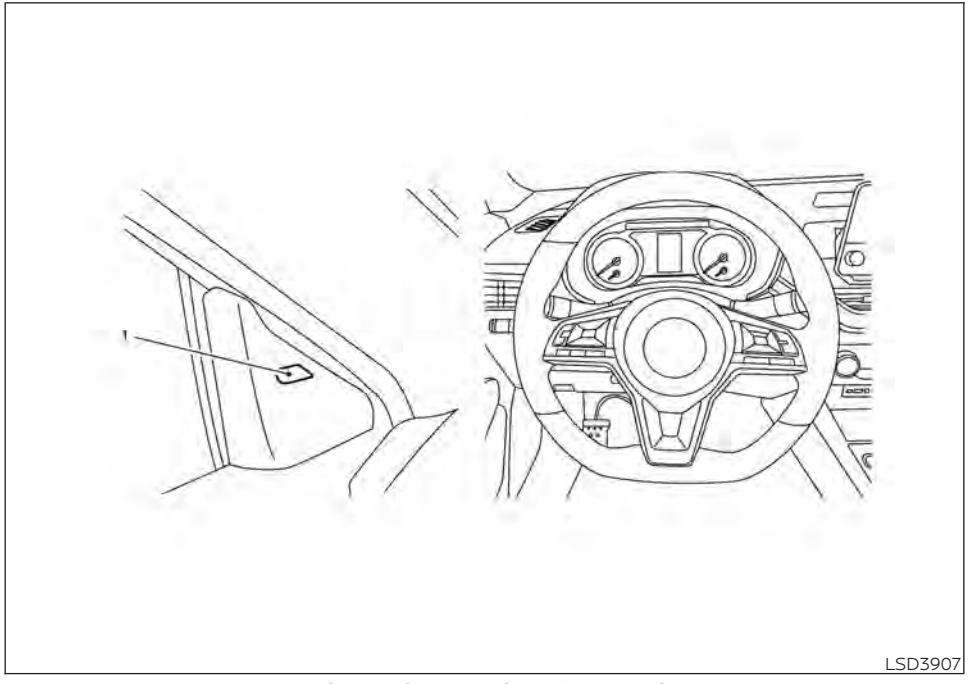

For vehicles with the 5 inch (13 cm) display

1. Side BSW/RCTA Indicator Light

The RCTA system can help alert the driver of an approaching vehicle when the driver is backing out of a parking space.

When the shift position is in R (Reverse) and the vehicle speed is less than approximately 5 mph (8 km/h), the RCTA system is operational.

If the radar detects an approaching vehicle from either side, the system chimes (once) and the side BSW/RCTA indicator light flashes on the side the vehicle is approaching from.

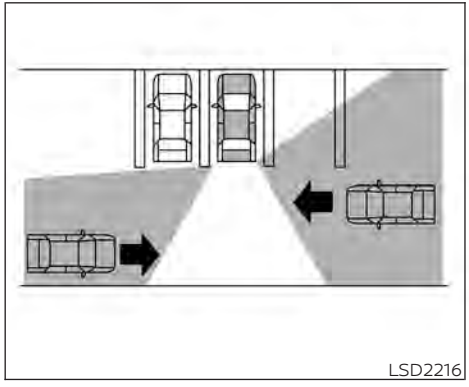

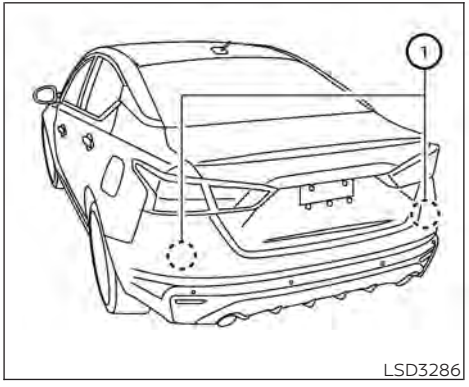

The RCTA system uses radar sensors ① installed on both sides near the rear bumper to detect an approaching vehicle.

The radar sensors ① can detect an approaching vehicle from up to approximately 66 ft. (20 m) away.

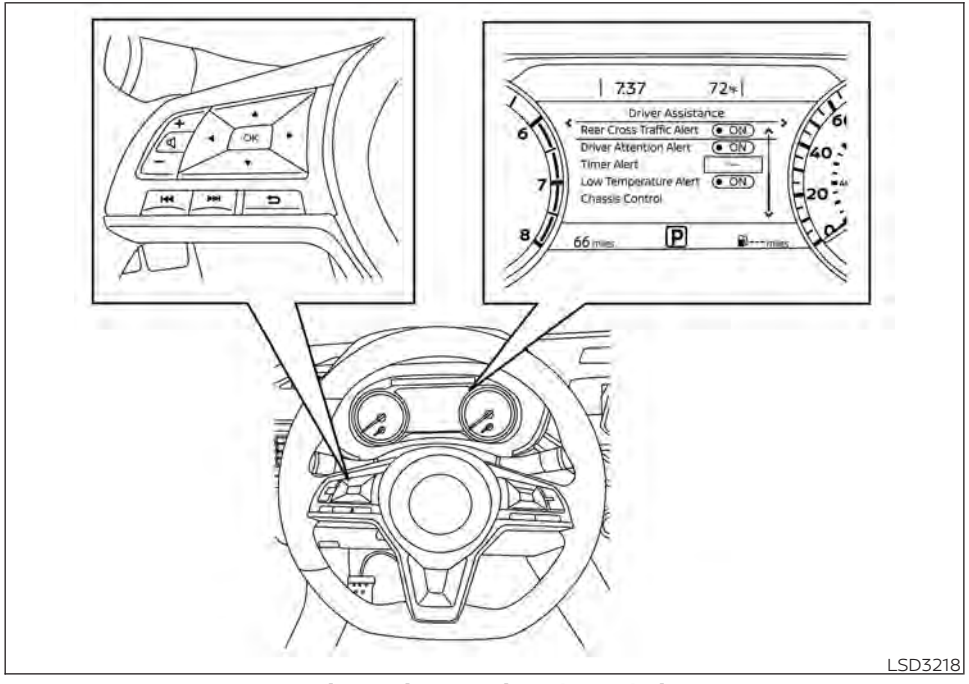

For vehicles with the 7 inch (18 cm) display

HOW TO ENABLE/DISABLE THE RCTA SYSTEM

Perform the following steps to enable or disable the RCTA system.

For vehicles with 7 inch (18 cm) display.

1. Press the ◀▶ button until "Settings" displays in the vehicle information display. Use the ▲▼ button to select "Driver Assistance." Then press the OK button.
2. Select "Rear Cross Traffic Alert" and press the OK button to turn the system on or off.

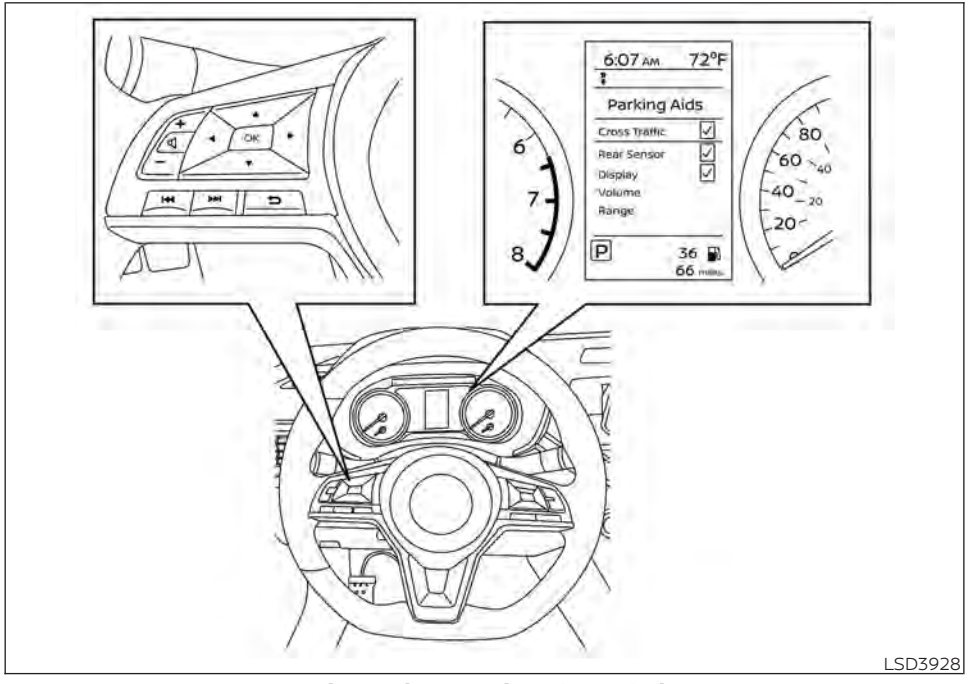

For vehicles with the 5 inch (13 cm) display

For vehicles with 5 inch (13 cm) display.

1. Press the ◀▶ button until "Settings" displays in the vehicle information display. Use the ▲▼ button to select "Driver Assistance." Then press the OK button.
2. Select "Parking Aids" and press the OK button.
3. Select "Cross Traffic" and press the OK button to turn the system on or off.

NOTE:

When enabling/disabling the system, the system setting will be retained even if the engine is restarted.

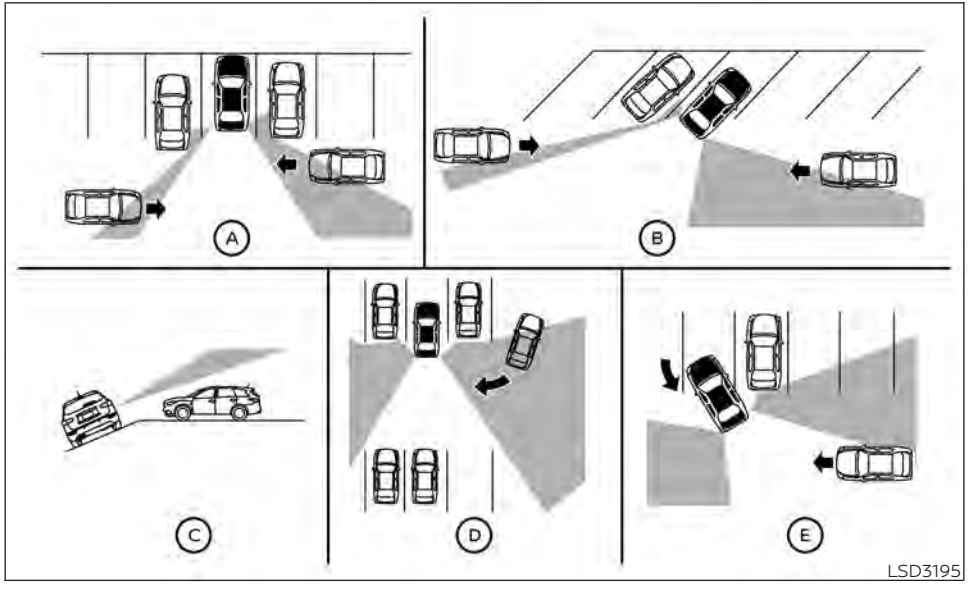

RCTA SYSTEM LIMITATIONS

⚠WARNING

Listed below are the system limitations for the RCTA system. Failure to operate the vehicle in accordance with these system limitations could result in serious injury or death.

- **Always check surroundings and turn to check what is behind you before backing up. The radar sensors detect approaching (moving) vehicles. The radar sensors cannot detect every object such as:**
  - **Pedestrians, bicycles, motorcycles, animals or child-operated toy vehicles**
  - **A vehicle that is passing at speeds greater than approximately 19 mph (30 km/h)**
  - **A vehicle that is passing at speeds lower than approximately 5 mph (8 km/h)**
- **The radar sensors may not detect approaching vehicles in certain situations:**
  - **Illustration Ⓐ: When a vehicle parked next to you obstructs the beam of the radar sensor.**
  - **Illustration Ⓑ: When the vehicle is parked in an angled parking space.**
  - **Illustration Ⓒ: When the vehicle is parked on inclined ground.**
  - **Illustration Ⓓ: When an approaching vehicle turns into your vehicle's parking lot aisle.**

- Illustration Ⓔ: When the angle formed by your vehicle and approaching vehicle is small.

- The following conditions may reduce the ability of the radar to detect other vehicles:
  - Severe weather
  - Road spray
  - Ice/frost/snow/dirt build-up on the vehicle
- Do not attach stickers (including transparent material), install accessories or apply additional paint near the radar sensors. These conditions may reduce the ability of the radar to detect other vehicles.
- Excessive noise (e.g., audio system volume, open vehicle window) will interfere with the chime sound, and it may not be heard.

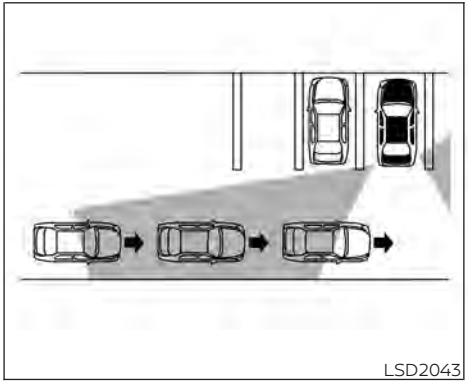

Illustration 1

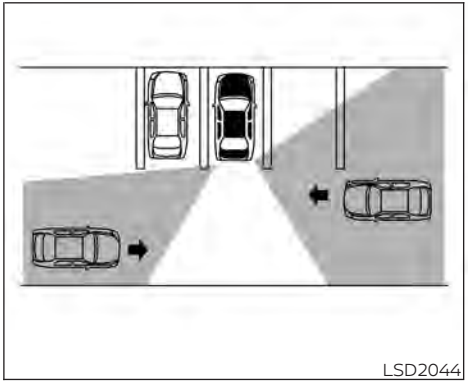

Illustration 2

NOTE:

In the case of several vehicles approaching in a row (Illustration 1) or in the opposite direction (Illustration 2), a chime may not be sounded by the RCTA system after the first vehicle passes the sensors.

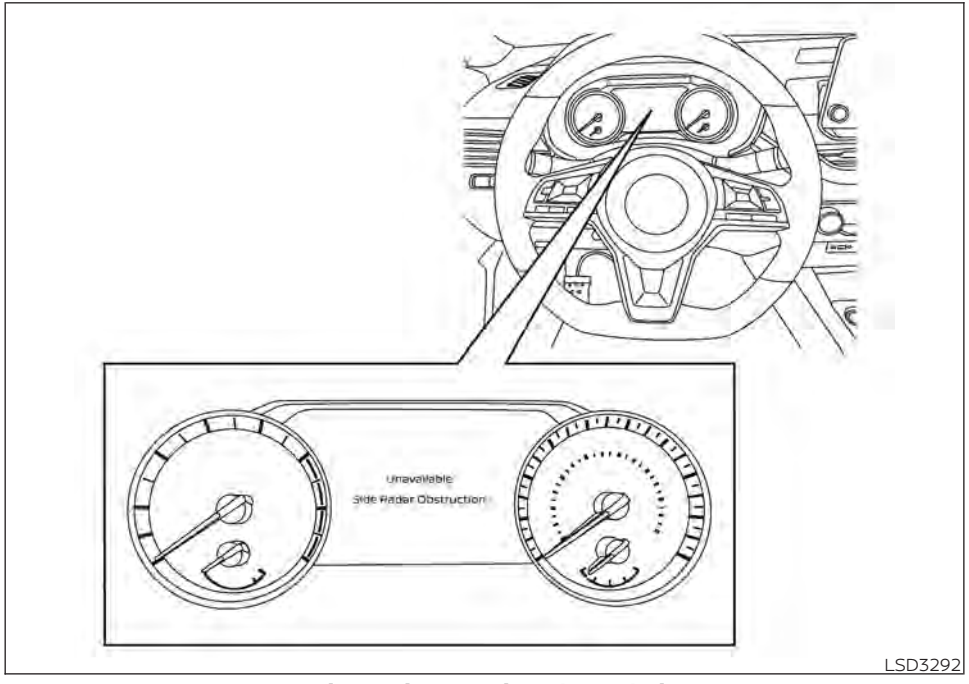

For vehicles with the 7 inch (18 cm) display

SYSTEM TEMPORARILY UNAVAILABLE

When radar blockage is detected, the system will be deactivated automatically. The "Unavailable: Side Radar Obstruction" warning message will appear in the vehicle information display.

The systems are not available until the conditions no longer exist.

The radar sensors may be blocked by temporary ambient conditions such as splashing water, mist or fog.

The blocked condition may also be caused by conditions such as ice, snow, frost or dirt obstructing the radar sensors.

NOTE:

If the BSW system stops working, the RCTA system will also stop working.

Action to take

When the above conditions no longer exist, the system will resume automatically.

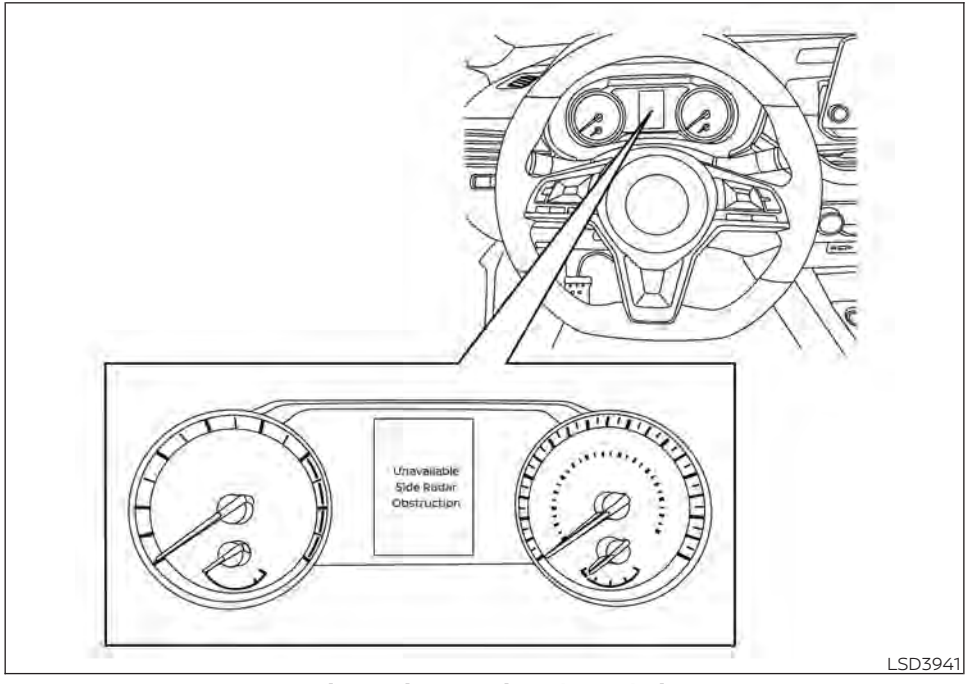

For vehicles with the 5 inch (13 cm) display

Malfunction

When the RCTA system malfunctions, it will turn off automatically. The system malfunction warning message with the BSW indicator (orange) will appear in the vehicle information display.

NOTE:

If the BSW system stops working, the RCTA system will also stop working.

Action to take

Stop the vehicle in a safe location, place the vehicle in the P (Park) position, turn the engine off and restart the engine. If the message continues to appear, have the system checked. It is recommended that you visit a NISSAN dealer for this service.

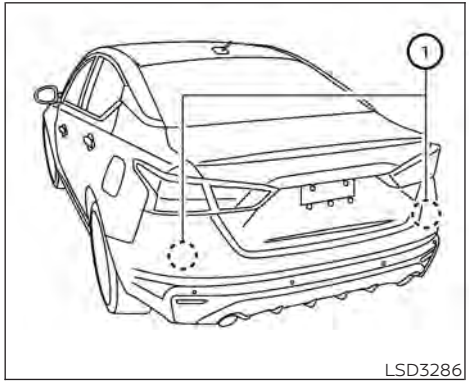

SYSTEM MAINTENANCE

The two radar sensors ① for the BSW and RCTA systems are located near the rear bumper. Always keep the area near the radar sensors clean.

The radar sensors may be blocked by temporary ambient conditions such as splashing water, mist or fog.

The blocked condition may also be caused by objects such as ice, frost or dirt obstructing the radar sensors.

Check for and remove objects obstructing the area around the radar sensors.

Do not attach stickers (including transparent material), install accessories or apply additional paint near the radar sensors.

Do not strike or damage the area around the radar sensors. It is recommended that you visit a NISSAN dealer if the area around the radar sensors is damaged due to a collision.

Radio frequency statement

NOTICE:

This device complies with Part 15 of the FCC Rules.

Operation is subject to the following two conditions:

this device may not cause harmful interference, and

this device must accept any interference received, including interference that may cause undesired operation.

Changes or modifications made to this equipment not expressly approved by (manufacturer name) may void the FCC authorization to operate this equipment.

NOTE:

This equipment has been tested and found to comply with the limits for a Class B digital device, pursuant to Part 15 of the FCC Rules. These limits are designed to provide reasonable protection against harmful interference in a residential installation. This equipment generates, uses and can radiate radio frequency energy and, if not installed and used in accordance with the instructions, may cause harmful interference to radio communications. However, there is no guarantee that interference will not occur in a particular installation. If this equipment does cause harmful interference to radio or television reception, which can be determined by turning the equipment off and on, the user is encouraged to try to correct the interference by one or more of the following measures:

Reorient or relocate the receiving antenna.

Increase the separation between the equipment and receiver.

Connect the equipment into an outlet on a circuit different from that to which the receiver is connected.

Consult the dealer or an experienced radio/TV technician for help.

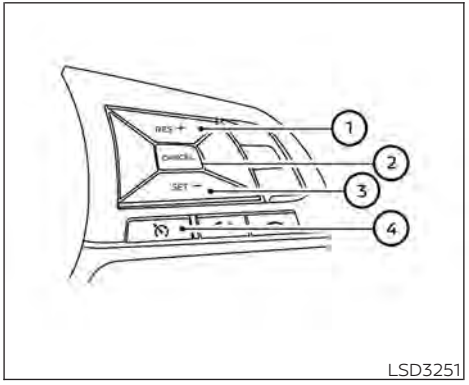

PRECAUTIONS ON CRUISE CONTROL

① RES+ switch

② CANCEL switch

③ SET– switch

④ Cruise control switch

- If the cruise control system malfunctions, it cancels automatically. The indicator in the instrument panel then blinks to warn the driver.
- If the indicator blinks, turn the cruise control switch off and have the system checked. It is recommended that you visit a NISSAN dealer for this service.
- The indicator may blink when the cruise control switch is turned on while pushing the RES+, SET–, or CANCEL switch. To properly set the cruise control system, use the following procedures.

⚠WARNING

Do not use the cruise control when driving under the following conditions:

- **When it is not possible to keep the vehicle at a set speed.**
- **In heavy traffic or in traffic that varies in speed.**
- **On winding or hilly roads.**
- **On slippery roads (rain, snow, ice, etc.).**
- **In very windy areas.**

Doing so could cause a loss of vehicle control and result in an accident.

CRUISE CONTROL OPERATIONS

Cruise Control Indicator	Color	Description
	None	System off
	White	Standby
	Green	Set
	Green(Blinking)	System fault

The cruise control allows driving at a speed between 25 - 89 mph (40 - 144 km/h) without keeping your foot on the accelerator pedal.

To turn on the cruise control, push the cruise control switch on. The indicator in the instrument panel will illuminate.

To set cruising speed, accelerate the vehicle to the desired speed, push the SET–switch and release it. Take your foot off the accelerator pedal. Your vehicle maintains the set speed.

- **To pass another vehicle,** depress the accelerator pedal. When you release the pedal, the vehicle returns to the previously set speed.
- The vehicle may not maintain the set speed when going up or down steep hills. If this happens, drive without the cruise control.

To cancel the preset speed, use one of the following three methods:

- Push the CANCEL switch.
- Tap the brake pedal.
- Push the cruise control switch off. The indicator in the instrument panel goes out.

The cruise control is automatically canceled if:

- You depress the brake pedal while pushing the RES+ or SET– switch. The preset speed is deleted from memory.
- The vehicle slows down more than 8 mph (13 km/h) below the set speed.
- You move the shift lever to N (Neutral).

To reset at a faster cruising speed, use one of the following three methods:

- Depress the accelerator pedal. When the vehicle attains the desired speed, push and release the SET– switch.
- Push and hold the RES+ switch. When the vehicle attains the speed you desire, release the switch.
- Push and release the RES+ switch. Each time you do this, the set speed increases by about 1 mph (1.6 km/h).

To reset at a slower cruising speed, use one of the following three methods:

- Lightly tap the brake pedal. When the vehicle attains the desired speed, push the SET– switch and release it.
- Push and hold the SET– switch. Release the switch when the vehicle slows to the desired speed.
- Push and release the SET– switch. Each time you do this, the set speed decreases by about 1 mph (1.6 km/h).

To resume the preset speed, push and release the RES+ switch. The vehicle returns to the last set cruising speed when the vehicle speed is over 25 mph (40 km/h).

To turn off the cruise control, use one of the following three methods:

- Push the CANCEL switch.
- Tap the brake pedal.
- Push the cruise control switch off. The indicator in the instrument panel goes out.

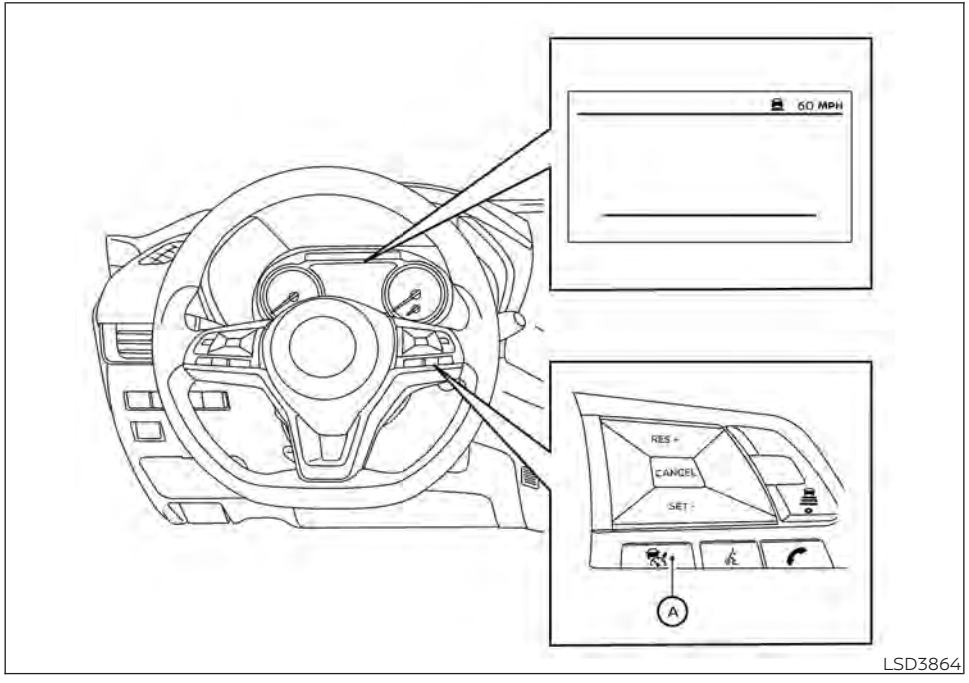

Ⓐ ICC switch

⚠ WARNING

Failure to follow the warnings and instructions for proper use of the ICC system could result in serious injury or death.

- **The ICC system is only an aid to assist the driver and is not a collision warning or avoidance device. It is the driver's responsibility to stay alert, drive safely, and be in control of the vehicle at all times.**
- **Always observe posted speed limits and do not set the speed over them.**
- **Always drive carefully and attentively when using the ICC system. Read and understand the Owner's Manual thoroughly before using the ICC system. To avoid serious injury or death, do not rely on the system to prevent accidents or to control the vehicle's speed in emergency situations. Do not use the ICC system except in appropriate road and traffic conditions.**

- **In the conventional (fixed speed) cruise control mode, a warning chime will not sound to warn you if you are too close to the vehicle ahead. Pay special attention to the distance between your vehicle and the vehicle ahead of you or a collision could occur.**

The ICC system maintains a selected distance from the vehicle in front of you within the speed range of 0 to 90 mph (0 to 144 km/h) up to the set speed. The set speed can be selected by the driver between 0 to 90 mph (30 to 144 km/h).

The vehicle travels at a set speed when the road ahead is clear.

The ICC system can be set to one of two cruise control modes:

- **Vehicle-to-vehicle distance control mode:** For maintaining a selected distance between your vehicle and the vehicle in front of you up to the preset speed
- **Conventional (fixed speed) cruise control mode:** For cruising at a preset speed

Push the ICC switch Ⓐ to choose the cruise control mode between the vehicle-to-vehicle distance control mode and the conventional (fixed speed) cruise control mode.

Once a control mode is activated, it cannot be changed to the other cruise control mode. To change the mode, push the ICC switch Ⓐ once to turn the system off. Then push the ICC switch Ⓐ again to turn the system back on and select the desired cruise control mode.

Always confirm the setting in the ICC system display.

For the vehicle-to-vehicle distance control mode, see "Vehicle-to-vehicle distance control mode" (P. 5-73).

For the conventional (fixed speed) cruise control mode, see "Conventional (fixed speed) cruise control mode" (P. 5-90).

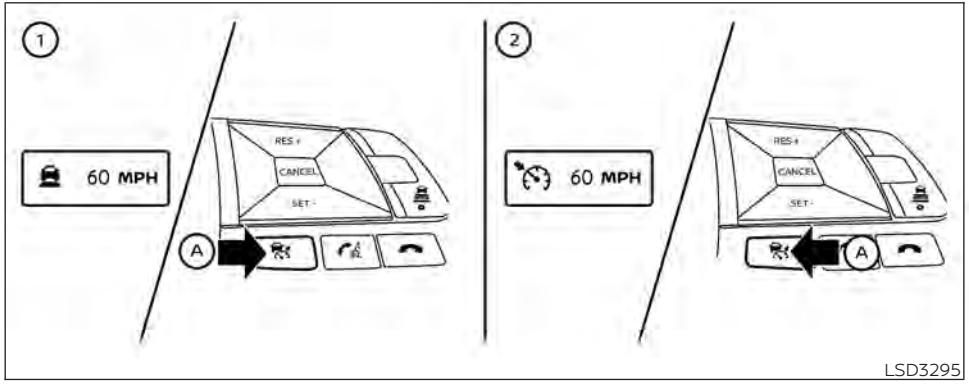

LSD3295

HOW TO SELECT THE CRUISE CONTROL MODE

Selecting the vehicle-to-vehicle distance control mode: To choose the vehicle-to-vehicle distance control mode ①, quickly push and release the ICC switch Ⓐ.

Selecting the conventional (fixed speed) cruise control mode: To choose the conventional (fixed speed) cruise control mode ②, push and hold the ICC switch Ⓐ for longer than approximately 1.5 seconds. For additional information, see "Conventional (fixed speed) cruise control mode" (P. 5-90).

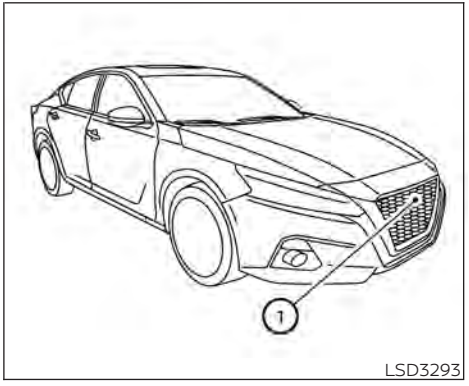

LSD3293

VEHICLE-TO-VEHICLE DISTANCE CONTROL MODE

In the vehicle-to-vehicle distance control mode, the ICC system automatically maintains a selected distance from the vehicle traveling in front of you according to that vehicle's speed (up to the set speed), or at the set speed when the road ahead is clear.

The ICC system is intended to enhance the operation of the vehicle when following a vehicle traveling in the same lane and direction.

If the radar sensor ① detects a slower moving vehicle ahead, the system will reduce the vehicle speed so that your vehicle follows the vehicle in front at the selected distance.

The system automatically controls the throttle and applies the brakes (up to approximately 40% of vehicle braking power) if necessary.

The detection range of the sensor is approximately 650 ft (200 m) ahead.

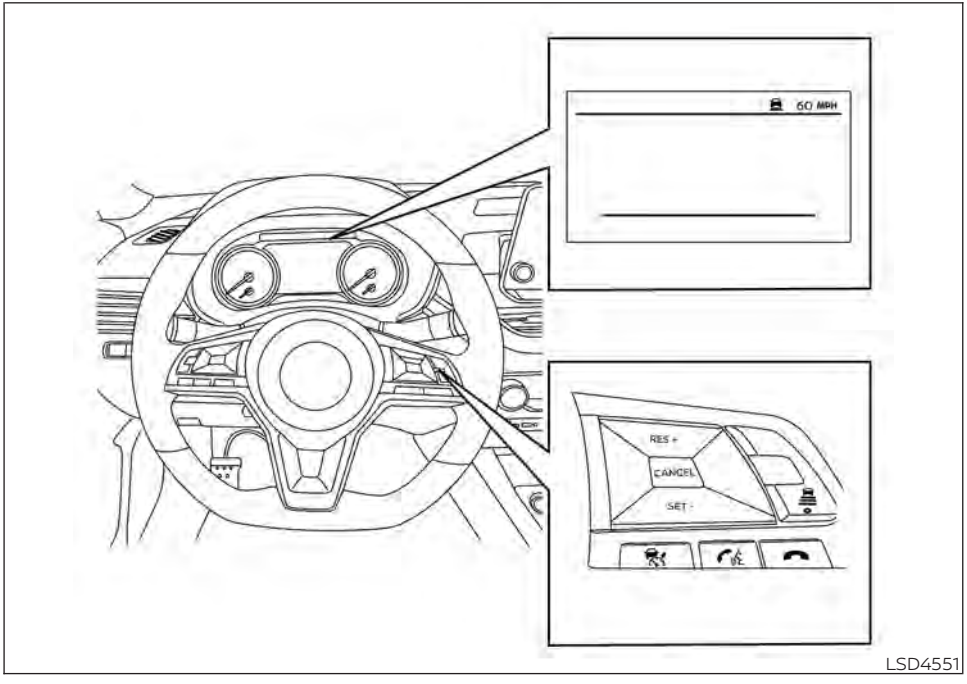

VEHICLE-TO-VEHICLE DISTANCE CONTROL MODE OPERATION

The vehicle-to-vehicle distance control mode is designed to maintain a selected distance from the vehicle in front of you and can reduce the speed to match a slower vehicle ahead. The system will decelerate the vehicle as necessary and if the vehicle ahead comes to a stop, the vehicle decelerates to a standstill. However, the ICC system can only apply up to 40% of the vehicle's total braking power.

This system should only be used when traffic conditions allow vehicle speeds to remain fairly constant or when vehicle speeds change gradually. If a vehicle moves into the traveling lane ahead or if a vehicle traveling ahead rapidly decelerates, the distance between vehicles may become closer because the ICC system cannot decelerate the vehicle quickly enough. If this occurs, the ICC system will sound a warning chime and blink the system display to notify the driver to take necessary action.

The system will cancel and a warning chime will sound if the speed is below approximately 15 mph (24 km/h) and a vehicle is not detected ahead. The system will also disengage when the vehicle goes above the maximum set speed.

For additional information, see "Approach warning" (P. 5-81).

The following items are controlled in the vehicle-to-vehicle distance control mode:

- When there are no vehicles traveling ahead, the vehicle-to-vehicle distance control mode maintains the speed set by the driver. The set speed range is between approximately 0 to 90 mph (30 to 144 km/h).
- When there is a vehicle traveling ahead, the vehicle-to-vehicle distance control mode adjusts the speed to maintain the distance, selected by the driver, from the vehicle ahead. If the vehicle ahead comes to a stop, the vehicle decelerates to a standstill within the limitations of the system. The system will cancel once it judges a standstill with a warning chime.
- When the vehicle traveling ahead has moved out from its lane of travel, the vehicle-to-vehicle distance control mode accelerates and maintains vehicle speed up to the set speed.

The ICC system does not control vehicle speed or warn you when you approach stationary and slow moving vehicles. You must pay attention to vehicle operation to maintain proper distance from vehicles ahead when approaching toll gates or traffic congestion.

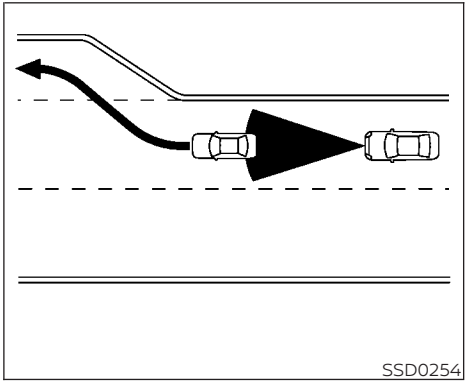

When driving on the freeway at a set speed and approaching a slower traveling vehicle ahead, the ICC system will adjust the speed to maintain the distance, selected by the driver, from the vehicle ahead. If the vehicle ahead changes lanes or exits the freeway, the ICC system will accelerate and maintain the speed up to the set speed. Pay attention to the driving operation to maintain control of the vehicle as it accelerates to the set speed.

The vehicle may not maintain the set speed on winding or hilly roads. If this occurs, you will have to manually control the vehicle speed.

Normally when controlling the distance to a vehicle ahead, this system automatically accelerates or decelerates your vehicle according to the speed of the vehicle ahead. Depress the accelerator to properly accelerate your vehicle when acceleration is required for a lane change. Depress the brake pedal when deceleration is required to maintain a safe distance to the vehicle ahead due to its sudden braking or if a vehicle cuts in. Always stay alert when using the ICC system.

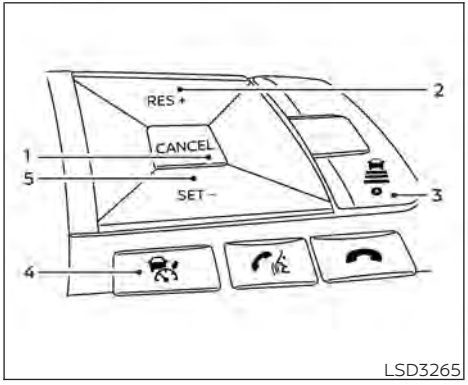

VEHICLE-TO-VEHICLE DISTANCE CONTROL MODE SWITCHES

The system is operated by the ICC switch and four control switches, all mounted on the steering wheel.

1. **CANCEL switch:**

   Deactivates the system without erasing the set speed.

2. **RES+ switch:**

   Resumes set speed or increases speed incrementally.

3. **DISTANCE switch:**

   Changes the vehicle's following distance:
   - Long
   - Middle
   - Short

4. **ICC switch:**

   Master switch to activate the system.

5. **SET- switch:**

   Sets desired cruise speed or reduces speed incrementally.

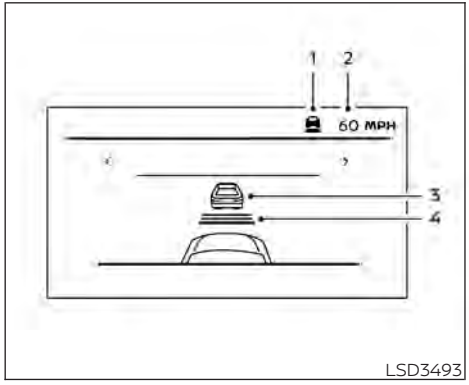

LSD3493

Vehicle-to-vehicle distance control mode display and indicators

The display is located between the speedometer and tachometer.

1. This indicator indicates the ICC system status depending on a color:
   - **ICC system ON indicator (gray):** Indicates that the ICC switch is on.
   - **ICC system SET indicator (green):** Indicates that the cruising speed is set.
   - **ICC system warning (yellow):** Indicates that there is a malfunction in the ICC system.
2. Set vehicle speed indicator:

   Indicates the set vehicle speed.

   For Canadian models, the speed is displayed in km/h.
3. Vehicle ahead detection indicator:

   Indicates whether it detects a vehicle in front of you.
4. Set distance indicator:

   Displays the selected distance between vehicles set with the distance switch.

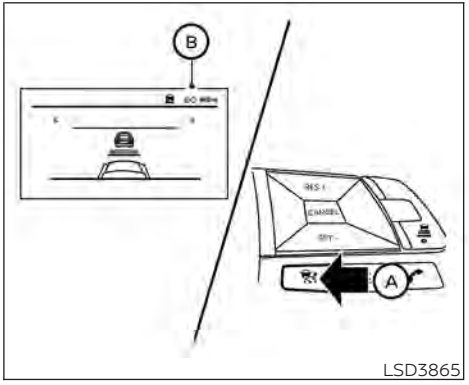

LSD3865

Operating vehicle-to-vehicle distance control mode

To turn on the cruise control, quickly push and release the ICC switch Ⓐ. The ICC system ON indicator (gray), set distance indicator and set vehicle speed indicator Ⓑ come on in a standby state for setting.

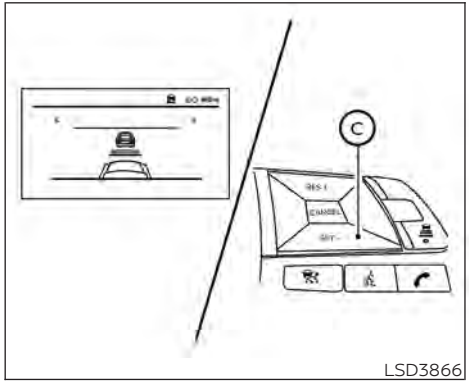

LSD3866

To set cruising speed, accelerate your vehicle to the desired speed, push the SET– switch Ⓒ and release it. The ICC system set indicator (green), vehicle ahead detection indicator, set distance indicator and set vehicle speed indicator Ⓑ will come on. Take your foot off the accelerator pedal. Your vehicle will maintain the set speed.

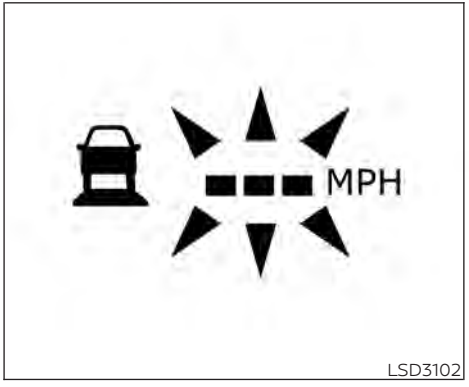

LSD3102

When the SET– switch is pushed under the following conditions, the system cannot be set and the ICC indicators will blink for approximately 2 seconds:

- When traveling below 20 mph (30 km/h) and a vehicle ahead is not detected
- When the shift lever is not in the D (Drive) or Manual mode
- When the parking brake is applied
- When the brakes are operated by the driver

When the SET– switch is pushed under the following conditions, the system cannot be set.

A warning chime will sound and a message will pop up:

- When the VDC system is off (To use the ICC system, turn on the VDC system. Push the ICC switch to turn off the ICC system and reset the ICC switch by pushing the ICC switch again.)

  For additional information about the VDC system, see "Vehicle Dynamic Control (VDC)" (P. 5-175).
- When VDC is operating
- When a wheel is slipping (To use the ICC system, make sure the wheels are no longer slipping.)

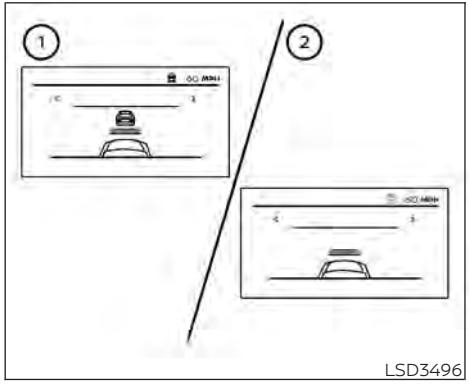

① System set display with vehicle ahead

② System set display without vehicle ahead

The driver sets the desired vehicle speed based on the road conditions. The ICC system maintains the set vehicle speed, similar to standard cruise control, as long as no vehicle is detected in the lane ahead. The ICC system displays the set speed.

Vehicle detected ahead

When a vehicle is detected in the lane ahead, the ICC system decelerates the vehicle by controlling the throttle and applying the brakes to match the speed of a slower vehicle ahead. The system then controls the vehicle speed based on the speed of the vehicle ahead to maintain the driver selected distance.

NOTE:

- **The stop lights of the vehicle come on when braking is performed by the ICC system.**
- **When the brake operates, a noise may be heard. This is not a malfunction.**

When a vehicle ahead is detected, the vehicle ahead detection indicator comes on. The ICC system will also display the set speed and selected distance.

Vehicle ahead not detected

When a vehicle is no longer detected ahead, the ICC system gradually accelerates your vehicle to resume the previously set vehicle speed. The ICC system then maintains the set speed.

When a vehicle is no longer detected, the vehicle ahead detection indicator turns off.

If a vehicle ahead appears during acceleration to the set vehicle speed or any time the ICC system is in operation, the system controls the distance to that vehicle.

When a vehicle is no longer detected under approximately 15 mph (25 km/h), the system will be canceled.

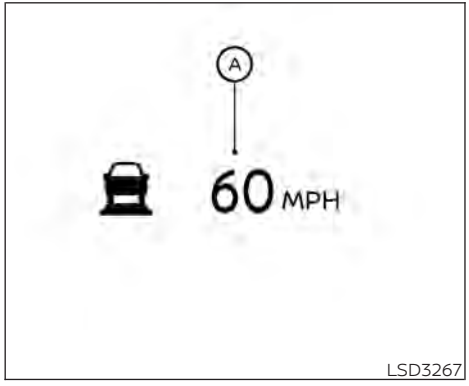

When passing another vehicle, the set speed indicator Ⓐ will flash when the vehicle speed exceeds the set speed. The vehicle detect indicator will turn off when the area ahead of the vehicle is open. When the pedal is released, the vehicle will return to the previously set speed.

Even though your vehicle speed is set in the ICC system, you can depress the accelerator pedal when it is necessary to accelerate your vehicle rapidly.

How to change the set vehicle speed

To cancel the preset speed, use one of the following methods:

- Push the CANCEL switch. The set vehicle speed indicator will go out.
- Tap the brake pedal. The set vehicle speed indicator will go out.
- Turn the ICC switch off. The ICC indicators will go out.

To reset at a faster cruising speed, use one of the following methods:

- Depress the accelerator pedal. When the vehicle attains the desired speed, push and release the SET– switch.
- Push and hold the RES+ switch. The set vehicle speed will increase by approximately 5 mph (5 km/h).
- Push, then quickly release the RES+ switch. Each time you do this, the set speed will increase by approximately 1 mph (1 km/h).

To reset at a slower cruising speed, use one of the following methods:

- Lightly tap the brake pedal. When the vehicle attains the desired speed, push the SET– switch and release it.
- Push and hold the SET– switch. The set vehicle speed will decrease by approximately 5 mph (5 km/h).
- Push, then quickly release the SET– switch. Each time you do this, the set speed will decrease by approximately 1 mph (1 km/h).

To resume the preset speed, push and release the RES+ switch. The vehicle will resume the last set cruising speed when the vehicle speed is over 20 mph (30 km/h).

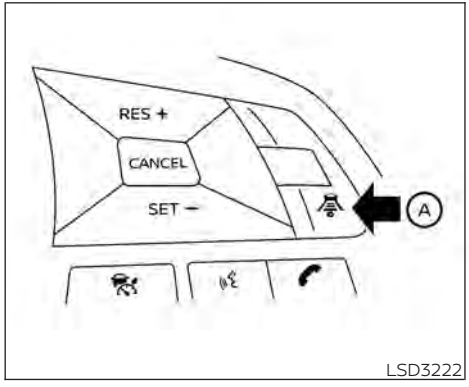

LSD3222

How to change the set distance to the vehicle ahead

The distance to the vehicle ahead can be selected at any time depending on the traffic conditions.

Each time the distance switch Ⓐ is pushed, the set distance will change to long, middle, short and back to long again, in that sequence.

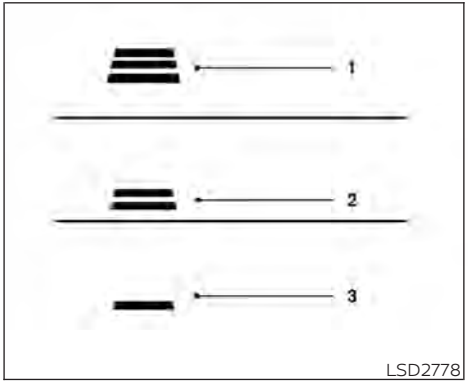

LSD2778

	Distance	Approximate distance at 60 mph (100 km/h) [ft (m)]
1.	Long	200 (60)
2.	Middle	150 (45)
3.	Short	90 (30)

- The distance to the vehicle ahead will change according to the vehicle speed. The higher the vehicle speed, the longer the distance.
- The distance setting will remain the current setting even if the engine is restarted.

Approach warning

If your vehicle comes closer to the vehicle ahead due to rapid deceleration of that vehicle or if another vehicle cuts in, the system warns the driver with the chime and ICC system display. Decelerate by depressing the brake pedal to maintain a safe vehicle distance if:

- The chime sounds.
- The vehicle ahead detection indicator blinks.

The warning chime may not sound in some cases when there is a short distance between vehicles. Some examples are:

- When the vehicles are traveling at the same speed and the distance between vehicles is not changing.
- When the vehicle ahead is traveling faster and the distance between vehicles is increasing.
- When a vehicle cuts in near your vehicle.

The warning chime will not sound when:

- The vehicle approaches other vehicles that are parked or moving slowly.
- The accelerator pedal is depressed, overriding the system.

NOTE:

The approach warning chime may sound and the system display may blink when the ICC sensor detects objects on the side of the vehicle or on the side of the road. This may cause the ICC system to decelerate or accelerate the vehicle. The ICC sensor may detect these objects when the vehicle is driven on winding roads, narrow roads, hilly roads, or when entering or exiting a curve. In these cases you will have to manually control the proper distance ahead of your vehicle.

Also, the sensor sensitivity can be affected by vehicle operation (steering maneuver or driving position in the lane) or traffic or vehicle condition (for example, if a vehicle is being driven with some damage).

Automatic cancellation

A chime sounds under the following conditions and the control is automatically canceled:

- When the vehicle ahead is not detected and your vehicle is traveling below the speed of 15 mph (25 km/h)
- When the system judges the vehicle is at a standstill
- When the shift lever is not in the D (Drive) position, Manual mode or L (Low) range.
- When the parking brake system is applied
- When the VDC system is turned off
- When VDC operates
- When distance measurement becomes impaired due to adhesion of dirt or obstruction to the sensor
- When a wheel slips
- When the radar signal is temporarily interrupted

VEHICLE-TO-VEHICLE DISTANCE CONTROL MODE LIMITATIONS

⚠WARNING

Listed below are the system limitations for the ICC system. Failure to operate the vehicle in accordance with these system limitations could result in serious injury or death.

- **The ICC system is primarily intended for use on straight, dry, open roads with light traffic. It is not advisable to use the ICC system in city traffic or congested areas.**
- **The ICC system will not adapt automatically to road conditions. This system should be used in evenly flowing traffic. Do not use the system on roads with sharp curves, or on icy roads, in heavy rain or in fog.**
- **As there is a performance limit to the distance control function, never rely solely on the ICC system. This system does not correct careless, inattentive or absentminded driving, or overcome poor visibility in rain, fog, or other bad weather. Decelerate the vehicle speed by depressing the brake pedal, depending on the distance to the vehicle ahead and the surrounding circumstances in order to maintain a safe distance between vehicles.**
- **If the vehicle ahead comes to a stop, the vehicle decelerates to a standstill within the limitations of the system. The system will cancel once it judges that the vehicle has come to a standstill and sound a warning chime. To prevent the vehicle from moving, the driver must depress the brake pedal.**

- **Always pay attention to the operation of the vehicle and be ready to manually control the proper following distance. The ICC system may not be able to maintain the selected distance between vehicles (following distance) or selected vehicle speed under some circumstances.**
- **The system may not detect the vehicle in front of you in certain road or weather conditions. To avoid accidents, never use the ICC system under the following conditions:**
  - **On roads where the traffic is heavy or there are sharp curves**
  - **On slippery road surfaces such as on ice or snow, etc.**
  - **During bad weather (rain, fog, snow, etc.)**
  - **When rain, snow or dirt adhere to the bumper around the distance sensor**
  - **On steep downhill roads (the vehicle may go beyond the set vehicle speed and frequent braking may result in overheating the brakes)**
  - **On repeated uphill and downhill roads**
  - **When traffic conditions make it difficult to keep a proper distance between vehicles because of frequent acceleration or deceleration**
  - **Interference by other radar sources**
- **Do not use the ICC system if you are towing a trailer. The system may not detect a vehicle ahead.**
- **In some road or traffic conditions, a vehicle or object can unexpectedly come into the sensor detection zone and cause automatic braking. Always stay alert and avoid using the ICC system where not recommended in this warning section.**

The radar sensor will not detect the following objects:

- Stationary and slow moving vehicles
- Pedestrians or objects in the roadway
- Oncoming vehicles in the same lane
- Motorcycles traveling offset in the travel lane

The sensor generally detects the signals returned from the vehicle ahead. Therefore, if the sensor cannot detect the reflection from the vehicle ahead, the ICC system may not maintain the selected distance.

The following are some conditions in which the sensor cannot properly detect a vehicle ahead and the system may not operate properly:

- When snow or road spray from traveling vehicles reduces the sensor's detection.
- When your vehicle is towing a trailer, etc.
- When excessively heavy baggage is loaded in the rear seat or cargo area of your vehicle.

The ICC system is designed to automatically check the sensor's operation within the limitations of the system.

When the sensor is covered with dirt or is obstructed, the system will automatically be canceled. If the sensor is covered with ice, a transparent or translucent vinyl bag, etc., the ICC system may not detect them. In these instances, the vehicle-to-vehicle distance control mode may not cancel and may not be able to maintain the selected following distance from the vehicle ahead. Be sure to check and clean the sensor regularly.

The detection zone of the radar sensor is limited. A vehicle ahead must be in the detection zone for the vehicle-to-vehicle distance detection mode to maintain the selected distance from the vehicle ahead.

A vehicle ahead may move outside of the detection zone due to its position within the same lane of travel. Motorcycles may not be detected in the same lane ahead if they are traveling offset from the centerline of the lane. A vehicle that is entering the lane ahead may not be detected until the vehicle has completely moved into the lane.

If this occurs, the ICC system may warn you by blinking the system indicator and sounding the chime. The driver may have to manually control the proper distance away from vehicle traveling ahead.

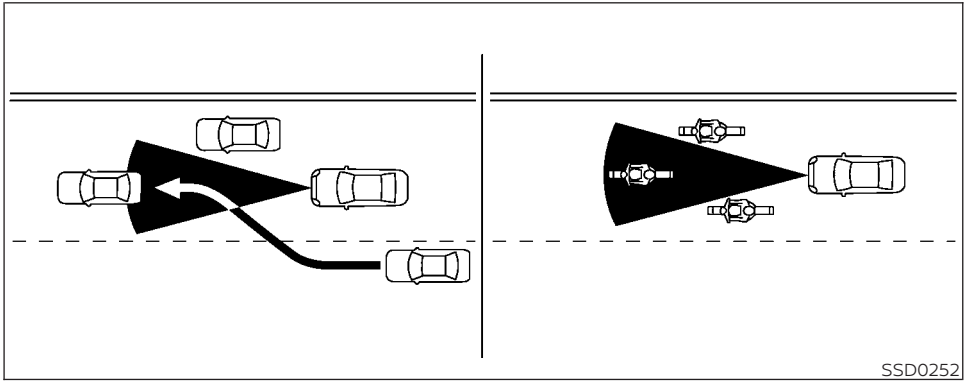

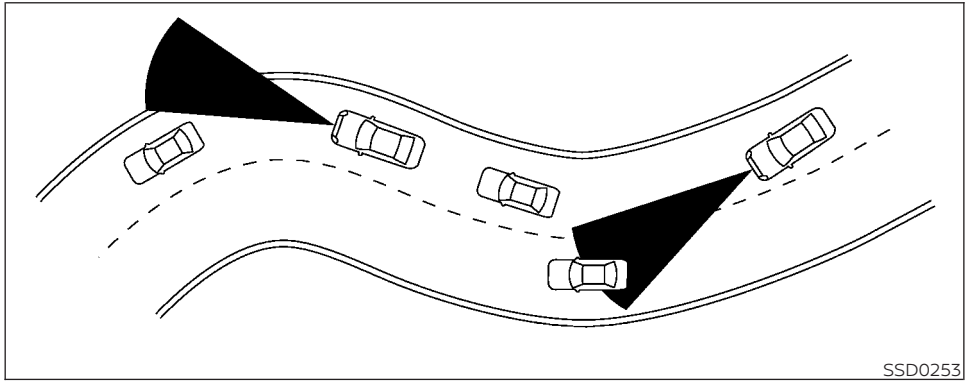

When driving on some roads, such as winding, hilly, curved, narrow roads, or roads which are under construction, the radar sensor may detect vehicles in a different lane, or may temporarily not detect a vehicle traveling ahead. This may cause the radar system to decelerate or accelerate the vehicle.

The detection of vehicles may also be affected by vehicle operation (steering maneuver or traveling position in the lane, etc.) or vehicle condition.

If this occurs, the ICC system may warn you by blinking the system indicator and sounding the chime unexpectedly. You will have to manually control the proper distance away from the vehicle traveling ahead.

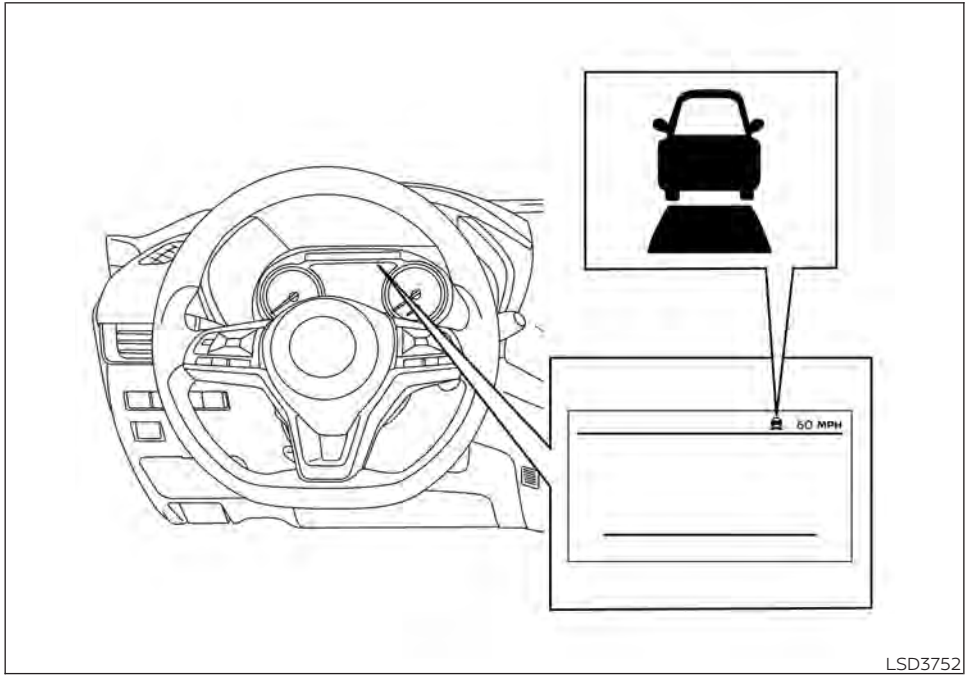

SYSTEM TEMPORARILY UNAVAILABLE

The following are conditions in which the ICC system may be temporarily unavailable. In these instances, the ICC system may not cancel and may not be able to maintain the selected following distance from the vehicle ahead.

Condition A

Under the following conditions, the ICC system is automatically canceled. A chime will sound and the system will not be able to be set:

- When the VDC system is turned off
- When the VDC operates
- When a vehicle ahead is not detected and your vehicle is traveling below the speed of 15 mph (25 km/h)
- When the system judges the vehicle is at a standstill
- When the shift lever is not in the D (Drive), Manual mode or L (Low) range.
- When the parking brake is applied
- When a wheel slips
- When the radar signal is temporarily interrupted

Action to take

When the conditions listed above are no longer present, turn the system off using the ICC switch. Turn the ICC system back on to use the system.

Condition B

When there is inclement weather (rain, fog, snow, etc.) blocking the front radar sensor, the ICC system will automatically be canceled, the chime will sound and the "Forward Driving Aids temporarily disabled Front Sensor blocked See Owner's Manual" warning message will appear in the vehicle information display.

Action to take

When the conditions listed above are no longer present, the warning message will no longer be available in the vehicle information display and the system will operate normally. If the "Forward Driving Aids temporarily disabled Front Sensor blocked See Owner's Manual" warning message continues to be displayed, have the system checked. It is recommended that you visit a NISSAN dealer for this service.

Condition C

When the radar sensor area of the front bumper is covered with mud, dirt, snow, ice, etc., or is obstructed, the ICC system will automatically be canceled.

The chime will sound and the "Forward Driving Aids temporarily disabled Front Sensor blocked See Owner's Manual" warning message will appear in the vehicle information display.

Action to take

If the warning message appears, stop the vehicle in a safe place, place the shift lever in the P (Park) position, and turn the engine off. When the radar signal is temporarily interrupted, clean the sensor area of the front bumper and restart the engine. If the "Forward Driving Aids temporarily disabled Front Sensor blocked See Owner's Manual" warning message continues to be displayed, have the system checked. It is recommended that you visit a NISSAN dealer for this service.

Condition D

When driving on roads with limited road structures (for example, long bridges, deserts, snow fields, driving next to long walls), the system may illuminate the ICC system warning (yellow) and display the "Forward Driving Aids temporarily disabled Front Sensor blocked See Owner's Manual" message.

Action to take

When the above driving conditions no longer exist, turn the system back on.

Condition E

When the ICC system is not operating properly, a chime sounds and the ICC system warning light (orange) will come on.

LSD4448

Action to take

If the warning light comes on, park the vehicle in a safe place. Turn the engine off, restart the engine, resume driving and set the ICC system again.

If it is not possible to set the system or the indicator stays on, it may indicate that the system is malfunctioning. Although the vehicle is still drivable under normal conditions, have the vehicle checked. It is recommended that you visit a NISSAN dealer for this service.

NOTE:

If the ICC system is temporarily unavailable, the conventional cruise control mode may still be used. For additional information, see "Conventional (fixed speed) cruise control mode" (P. 5-90).

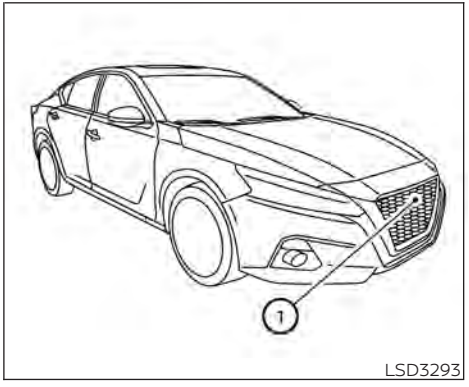

LSD3293

SYSTEM MAINTENANCE

The sensor for the ICC system ① is located on the front of the vehicle.

To keep the ICC system operating properly, be sure to observe the following:

- Always keep the sensor area of the front bumper/emblem clean.
- Do not strike or damage the areas around the sensor.
- Do not attach a sticker (including transparent material) or install an accessory near the sensor. This could cause failure or malfunction.

- Do not attach metallic objects near the sensor area (brush guard, etc.). This could cause failure or malfunction.
- Do not alter, remove, or paint the front bumper. Before customizing or restoring the front bumper, it is recommended that you visit a NISSAN dealer.

Radio frequency statement

For USA

FCC ID OAYARS4B

This device complies with Part 15 of the FCC Rules. Operation is subject to the following two conditions:

1. This device may not cause harmful interference, and
2. This device must accept any interference received, including interference that may cause undesired operation.

FCC Warning

Changes or modifications not expressly approved by the party responsible for compliance could void the user's authority to operate the equipment.

For Canada

Model: ARS4–B

IC: 4135A-ARS4B

FCC ID: OAYARS4B

This device complies with Part 15 of the FCC Rules and with Industry Canada licence-exempt RSS standard(s). Operation is subject to the following two conditions:

1. This device may not cause interference, and
2. This device must accept any interference received, including interference that may cause undesired operation of the device.

Le présent appareil est conforme aux CNR d'Industrie Canada applicables aux appareils radio exempts de licence. L'exploitation est autorisée aux deux conditions suivantes:

1. L'appareil ne doit pas produire de brouillage, et
2. L'utilisateur de l'appareil doit accepter tout brouillage radioélectrique subi, même si le brouillage est susceptible d'en compromettre le fonctionnement.

Radio frequency radiation exposure information:

This equipment complies with FCC and IC radiation exposure limits set forth for an uncontrolled environment.

This equipment should be installed and operated with minimum distance of 30 cm between the radiator and your body.

This transmitter must not be co-located or operating in conjunction with any other antenna or transmitter.

Cet équipement est conforme aux limites d'exposition aux rayonnements IC établies pour un environnement non contrôlé.

Cet équipement doit être installé et utilisé avec un minimum de 30 cm de distance entre la source de rayonnement et votre corps.

FCC Notice

Changes or modifications not expressly approved by the party responsible for compliance could void the user's authority to operate the equipment.

CONVENTIONAL (fixed speed) CRUISE CONTROL MODE

This mode allows driving at a speed above 25 mph (40 km/h) without keeping your foot on the accelerator pedal.

⚠ WARNING

- **In the conventional (fixed speed) cruise control mode, a warning chime does not sound to warn you if you are too close to the vehicle ahead, as neither the presence of the vehicle ahead nor the vehicle-to-vehicle distance is detected.**
- **Pay special attention to the distance between your vehicle and the vehicle ahead of you or a collision could occur.**
- **Always confirm the setting in the ICC system display.**
- **Do not use the conventional (fixed speed) cruise control mode when driving under the following conditions:**
  - **When it is not possible to keep the vehicle at a set speed**
  - **In heavy traffic or in traffic that varies in speed**
  - **On winding or hilly roads**
  - **On slippery roads (rain, snow, ice, etc.)**
  - **In very windy areas**
- **Doing so could cause a loss of vehicle control and result in an accident.**

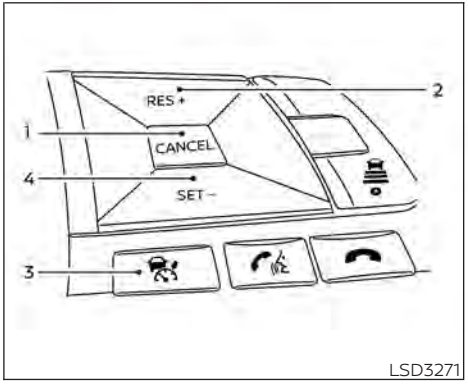

Conventional (fixed speed) cruise control switches

1. CANCEL switch:
   Deactivates the system without erasing the set speed
2. RES+ switch:
   Resumes set speed or increases speed incrementally
3. ICC switch:
   Master switch to activate the system
4. SET- switch:
   Sets desired cruise speed or reduces speed incrementally

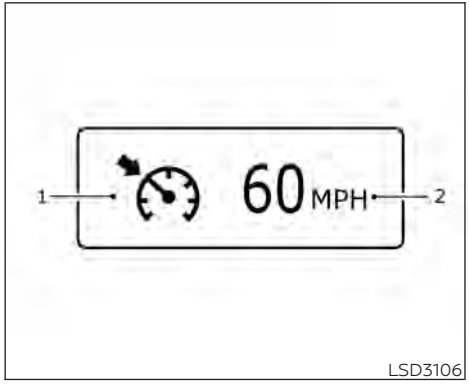

Conventional (fixed speed) cruise control mode display and indicators

The display is located in the vehicle information display.

1. Cruise indicator:
   This indicator indicates the condition of the ICC system depending on a color.
   - Cruise control ON indicator (gray): Indicates that the ICC switch is on
   - Cruise control SET indicator (green): Indicates that the cruising speed is set
   - Cruise control warning (yellow): Indicates that there is a malfunction in the ICC system
2. Set vehicle speed indicator:
   This indicator indicates the set vehicle speed. For Canadian models, the speed is displayed in km/h.

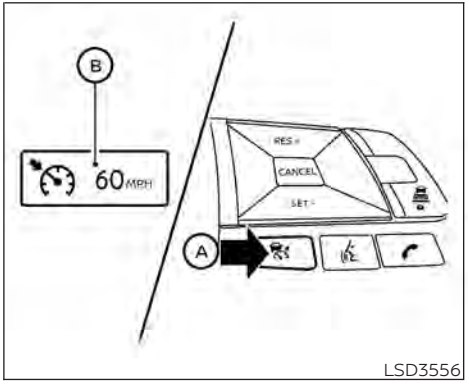

Operating conventional (fixed speed) cruise control mode

To turn on the conventional (fixed speed) cruise control mode, push and hold the ICC switch Ⓐ for longer than about 1.5 seconds.

When pushing ICC switch on, the conventional (fixed speed) cruise control mode display and indicators Ⓑ are displayed in the vehicle information display. After you hold ICC switch on for longer than about 1.5 seconds, the ICC system display turns off. The cruise indicator appears. You can now set your desired cruising speed. Pushing

the ICC switch again will turn the system completely off. When the ignition switch is placed in the OFF position, the system is also automatically turned off.

To use the ICC system again, quickly push and release the ICC switch (vehicle-to vehicle distance control mode) or push and hold it (conventional cruise control mode) again to turn it on.

⚠CAUTION

To avoid accidentally engaging cruise control, make sure to turn the ICC switch off when not using the ICC system.

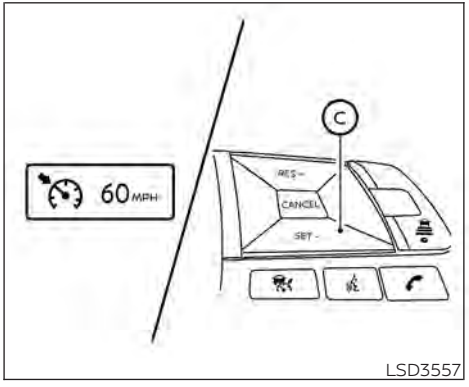

To set cruising speed, accelerate your vehicle to the desired speed, push the SET- Ⓒ switch and release it. (The color of the cruise indicator changes to green and set vehicle speed indicator comes on.) Take your foot off the accelerator pedal. Your vehicle will maintain the set speed.

- To pass another vehicle, depress the accelerator pedal. When you release the pedal, the vehicle will return to the previously set speed.
- The vehicle may not maintain the set speed when going up or down steep hills. If this happens, manually maintain vehicle speed.

To cancel the preset speed, use any of the following methods:

1. Push the CANCEL switch. The vehicle speed indicator will turn off.
2. Tap the brake pedal. The vehicle speed indicator will turn off.
3. Turn the ICC switch off. Both the cruise indicator and vehicle speed indicator will turn off.

To reset at a faster cruising speed, use one of the following three methods:

1. Depress the accelerator pedal. When the vehicle attains the desired speed, push and release the SET- switch.
2. Push and hold the RES+ switch. When the vehicle attains the desired speed, release the switch.
3. Push, then quickly release the RES+ switch. Each time you do this, the set speed will increase by about 1 mph (1 km/h).

To reset at a slower cruising speed, use one of the following three methods:

1. Lightly tap the brake pedal. When the vehicle attains the desired speed, push the SET- switch and release it.
2. Push and hold the SET- switch. Release the switch when the vehicle slows down to the desired speed.
3. Push, then quickly release the SET- switch. Each time you do this, the set speed will decrease by about 1 km/h (1 mph).

To resume the preset speed, push and release the RES+ switch. The vehicle will resume the last set cruising speed when the vehicle speed is over 25 mph (40 km/h).

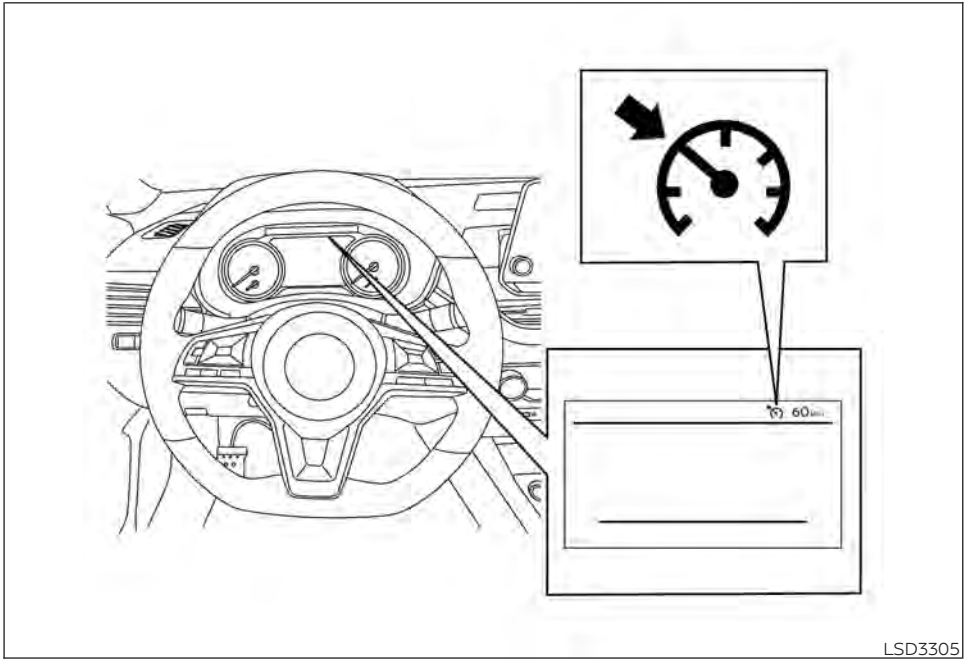

LSD3305

System temporarily unavailable

A chime sounds under the following conditions and the control is automatically canceled:

- When the vehicle slows down more than 8 mph (13 km/h) below the set speed
- When the shift lever is not in the D (Drive) or manual shift mode

- When the parking brake is applied
- When the VDC operates (including the traction control system)
- When a wheel slips

When the system is not operating properly, the chime sounds and the color of the cruise indicator will change to orange.

Action to take

If the color of the cruise indicator changes to orange, stop the vehicle in a safe place and place the shift lever in the P (Park) position. Turn the engine off, restart the engine, resume driving, and then perform the setting again.

If it is not possible to set or the indicator stays on, it may indicate that the system is malfunctioning. Although the vehicle is still drivable under normal conditions, have the vehicle checked. It is recommended that you visit a NISSAN dealer for this service.

⚠WARNING

Failure to follow the warnings and instructions for proper use of the ProPILOT Assist system could result in serious injury or death.

- **ProPILOT Assist is not a self-driving system. Within the limits of its capabilities, as described in this manual, it helps the driver with certain driving activities.**
- **The ProPILOT Assist system is not a replacement for proper driving procedures and is not designed to correct careless, inattentive or absent-minded driving. ProPILOT Assist will not always steer the vehicle to keep it in the lane. The ProPILOT Assist system is not designed to prevent loss of control. It is the driver's responsibility to stay alert, drive safely, keep the vehicle in the traveling lane, and be in control of the vehicle at all times.**
- **There are limitations to the ProPILOT Assist system capability. The ProPILOT Assist system does not function in all driving, traffic, weather, and road conditions. It is the driver's responsibility to stay alert, drive safely, keep the vehicle in the traveling lane, and be in control of the vehicle at all times.**
- **The ProPILOT Assist system is only an aid to assist the driver and is not a collision warning or avoidance device.**
- **The ProPILOT Assist system is for highway use only and is not intended for city driving. Failure to apply the brakes or steer the vehicle when necessary may result in a serious accident.**
- **Always observe posted speed limits and do not set the speed over them.**
- **Never take your hands off the steering wheel when driving. Always keep your hands on the steering wheel and drive your vehicle safely.**
- **Never unfasten your safety belt when using ProPILOT Assist. Doing so automatically cancels the ProPILOT Assist system.**

- **The ProPILOT Assist system does not react to stationary and slow moving vehicles.**
- **Always drive carefully and attentively when using the ProPILOT Assist system. Read and understand the Owner's Manual thoroughly before using the ProPILOT Assist system. To avoid serious injury or death, do not rely on the system to prevent accidents or to control the vehicle's speed in emergency situations. Do not use the ProPILOT Assist system except in appropriate road and traffic conditions.**

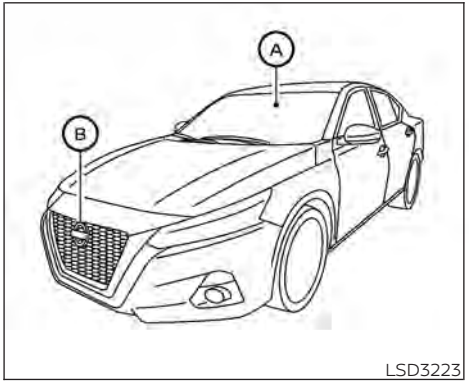

The ProPILOT Assist system is intended to enhance the operation of the vehicle when following a vehicle traveling in the same lane and direction.

The ProPILOT Assist system uses a multi-sensing front camera Ⓐ installed behind the windshield and a radar sensor located on the front of the vehicle Ⓑ to measure the distance to the vehicle ahead in the same lane and to monitor the lane markers. If the vehicle detects a slower moving vehicle ahead, the system will reduce the vehicle speed so that your vehicle follows the vehicle in front at the selected distance. The system will also help keep the vehicle centered in the traveling lane when clear lane markings are detected.

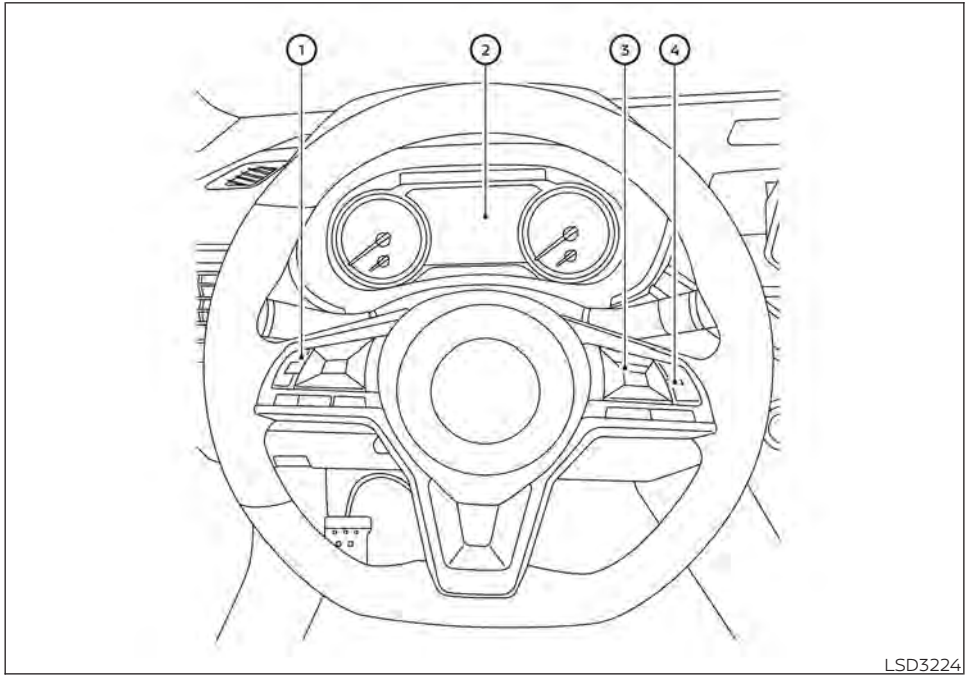

PROPILOT ASSIST SYSTEM OPERATION

① Steering-wheel-mounted control (left)

② Vehicle information display

③ Steering-wheel-mounted control (right)

④ ProPILOT Assist switch

The ProPILOT Assist system has the following two functions:

1. **Intelligent Cruise Control (ICC)**

   The ICC system can be set to one of two cruise control modes:

- **Conventional (fixed speed) cruise control mode:** For cruising at a preset speed

NOTE:
Steering Assist is not available in the conventional (fixed speed) cruise control mode.

- **Vehicle-to-vehicle distance control mode:** The ICC system maintains a selected distance from the vehicle in front of you within the speed range of 0 to 90 mph (0 to 144 km/h) up to the set speed. The set speed can be selected by the driver between 20 to 90 mph (32 to 144 km/h). When the vehicle ahead slows to a stop, your vehicle gradually decelerates to a standstill. When the vehicle is stopped, the ICC system maintains braking force to keep your vehicle stopped.

NOTE:
When your vehicle is stopped for less than 3 seconds and the vehicle ahead begins to move, your vehicle will start moving again automatically.

- When your vehicle is at a standstill for more than 3 seconds and the vehicle ahead begins to accelerate, push the RES+ switch or lightly depress the accelerator pedal. The ICC system starts to follow the vehicle ahead.
- When no vehicle is detected ahead within the driver selected distance, the vehicle travels at the speed set by the driver. The speed must be above 20 mph (32 km/h) to use this function.

NOTE:
Even if the Automatic Emergency Braking (AEB) with Pedestrian Detection setting is turned off by the driver using the "Settings" menu in the vehicle information display, AEB with Pedestrian Detection will be automatically turned on when ICC is used.

2. **Steering Assist**

   The Steering Assist function controls the steering system to help keep your vehicle within the traveling lane.

   When there is no vehicle ahead, Steering Assist is not available at speeds under 37 mph (60 km/h).

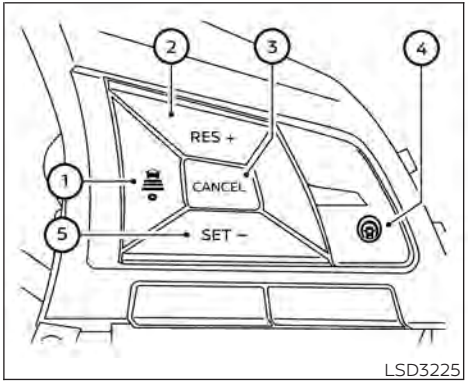

ProPILOT Assist switches

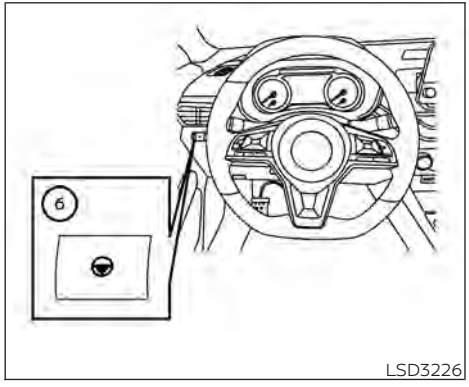

① **DISTANCE switch:**

- Long
- Middle
- Short

② **RES+ switch:**

Resumes set speed or increases speed incrementally

③ **CANCEL switch:**

Deactivates the ProPILOT Assist system

④ **ProPILOT Assist switch:**

Turns the ProPILOT Assist system on or off

⑤ **SET- switch:**

Sets desired cruise speed or reduces speed incrementally

⑥ **Steering Assist switch:**

Turns the Steering Assist function on or off

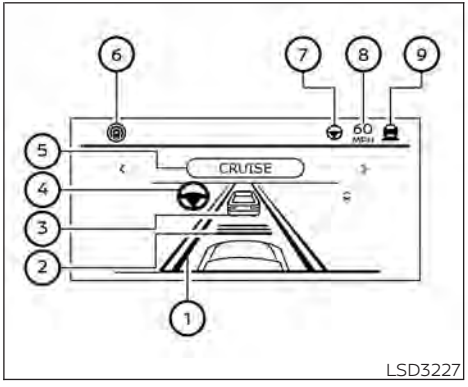

The ProPILOT Assist system display and indicators

① **Lane marker indicator**

Indicates whether the system detects lane markers

- No lane markers displayed: Steering Assist is turned off
- Lane marker indicator (gray): No lane markers detected
- Lane marker indicator (green): Lane markers detected
- Lane marker indicator (yellow): Lane departure is detected

② Set distance indicator

Displays the selected distance

③ Vehicle ahead detection indicator

Indicates whether the system detects a vehicle in front of you

④ Steering Assist indicator

Indicates the status of the Steering Assist function by the color of the indicator

- Steering Assist indicator (gray): Steering Assist standby
- Steering Assist indicator (green): Steering Assist active
- Steering Assist indicator (orange): Steering Assist malfunction

⑤ ProPILOT Assist activation

Displays once the ProPILOT Assist system is activated

⑥ ProPILOT Assist status indicator

Indicates the status of the ProPILOT Assist system by the color of the indicator

- ProPILOT Assist status indicator (white): ProPILOT Assist is on but in standby.
- ProPILOT Assist status indicator (blue): ProPILOT Assist active

⑦ Steering Assist status indicator/ warning

Displays the status of the Steering Assist by the color of the indicator/warning

- No Steering Assist status indicator displayed: Steering Assist is turned off
- Steering Assist indicator (gray): Steering Assist standby
- Steering Assist indicator (green): Steering Assist active
- Steering Assist indicator (yellow): Steering Assist malfunction

⑧ Set vehicle speed indicator

Indicates the set vehicle speed

⑨ Speed control status indicator/ warning

Displays the status of speed control by the color and shape of the indicator/warning

- Speed control status indicator/ warning (gray): ICC standby
- Speed control status indicator/ warning (solid green): ICC (distance control mode) is active (vehicle detected ahead). Your vehicle matches the speed of the vehicle ahead.
- Speed control status indicator/ warning (green outline): ICC (maintain speed control mode) is active (no vehicle detected ahead). Your vehicle maintains the driver-selected set speed.
- Speed control status indicator/ warning (orange): Indicates an ICC malfunction

TURNING THE CONVENTIONAL (fixed speed) CRUISE CONTROL MODE ON

NOTE:

ProPILOT Assist provides no approach warnings, automatic braking, or steering assist in the conventional (fixed speed) cruise control mode.

To choose the conventional (fixed speed) cruise control mode, push and hold the ProPILOT Assist switch for longer than approximately 1.5 seconds. For additional information, see "Conventional (fixed speed) cruise control mode" (P. 5-123).

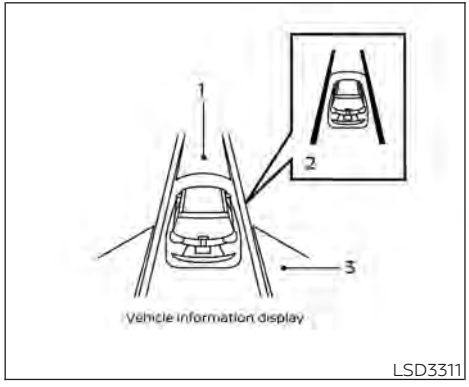

1. Automatic Emergency Braking (AEB) with Pedestrian Detection
2. Lane Departure Warning (LDW) when shaded and Intelligent Lane Intervention (I-LI) when solid
3. Blind Spot Warning (BSW)

OPERATING PROPILOT ASSIST

1. Push the ProPILOT Assist switch Ⓐ. This turns on the ProPILOT Assist system.

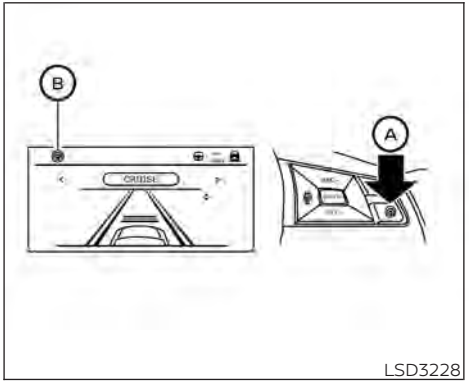

2. A screen is displayed for a period of time that indicates the status of the driving aid functions.
- AEB with Pedestrian Detection, LDW, and BSW are enabled when the specified driving aid is shaded.
- I-LI is enabled when the driving aid is solid.

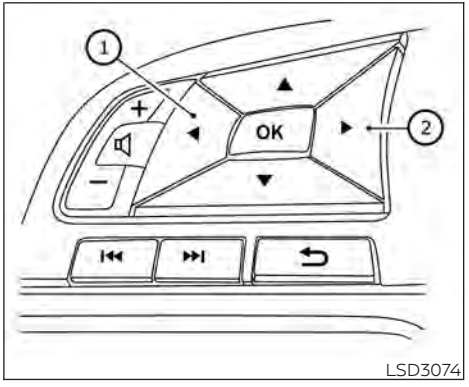

- To change the status of the driving aids, use the ① ◄ or ② ► button to navigate the settings screen. For additional information, see "How to use the vehicle information display" (P. 2-35).

3. The status of the ProPILOT Assist system is displayed in the vehicle information display Ⓑ.
4. Accelerate or decelerate your vehicle to the desired speed.

5. Push the SET- switch Ⓒ. The ProPILOT Assist system begins to automatically maintain the set speed. The ProPILOT Assist activation indicator Ⓓ and ProPILOT Assist status indicator Ⓔ illuminate (blue). When a vehicle ahead is traveling at a speed of 20 mph (32 km/h) or below and the SET- switch is pushed, the set speed of your vehicle is 20 mph (32 km/h).

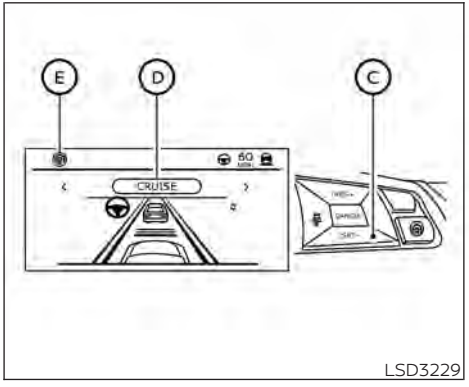

LSD3229

NOTE:

When Lane Departure Prevention is enabled in the settings menu, turning the ProPILOT Assist system (if so equipped) on will activate the I-LI system at the same time. If Lane Departure Prevention is not enabled in the settings menu, I-LI will automatically activate when the ProPILOT Assist system is "SET." For additional information, see "Intelligent Lane Intervention (I-LI)" (P. 5-40).

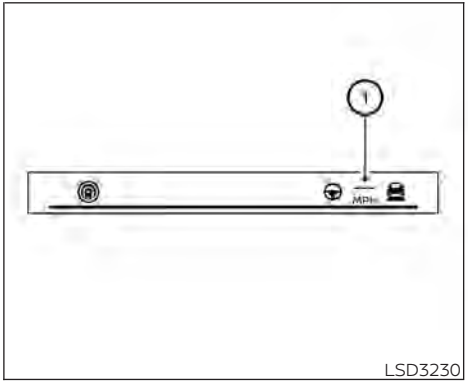

LSD3230

When the SET- switch is pushed under the following conditions, the ProPILOT Assist system cannot be set and the set vehicle speed indicator ① blinks for approximately 2 seconds:

- When traveling below 20 mph (32 km/h) and the vehicle ahead is not detected
- When the shift lever is not in the D (Drive) position or manual shift mode
- When the parking brake is applied
- When the brakes are operated by the driver

- When the VDC system is off. For additional information, see "Vehicle Dynamic Control (VDC) system" (P. 5-175).
- When the VDC system (including the traction control system) is operating
- When a wheel is slipping
- When any door is open
- When the driver's seat belt is not fastened

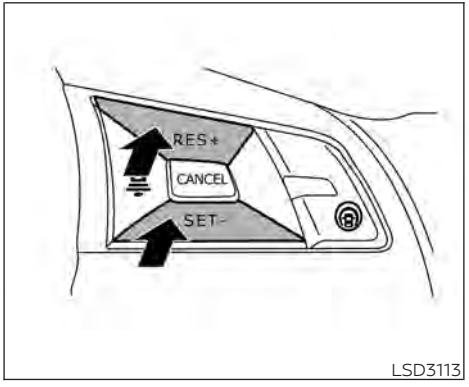

How to change the set vehicle speed

The set vehicle speed can be adjusted.

To change to a faster cruising speed:

- Push and hold the RES+ switch. The set vehicle speed increases by approximately 5 mph (5 km/h).
- Push, then quickly release, the RES+ switch. Each time you do this, the set speed increases by approximately 1 mph (1 km/h).

To change to a slower cruising speed:

- Push and hold the SET- switch. The set vehicle speed decreases by approximately 5 mph (5 km/h).
- Push, then quickly release, the SET- switch. Each time you do this, the set speed decreases by approximately 1 mph (1 km/h).

How to momentarily accelerate or decelerate

- Depress the accelerator pedal when acceleration is required. Release the accelerator pedal to resume the previously set vehicle speed.
- Depress the brake pedal when deceleration is required. Control by the ProPILOT Assist system is canceled. Push the RES+ switch to resume the previously set vehicle speed.

⚠ WARNING

When the accelerator pedal is depressed and you are approaching the vehicle ahead, the ICC system will neither control the brake nor warn the driver with the chime and display. The driver must manually control the vehicle speed to maintain a safe distance to the vehicle ahead. Failure to do so could result in severe personal injury or death.

NOTE:

When you accelerate by depressing the accelerator pedal or decelerate by pushing the SET- switch and the vehicle travels faster than the speed set by the driver, the set speed vehicle indicator will blink.

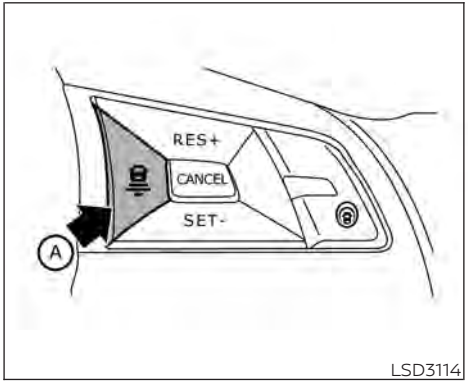

LSD3114

How to change the set distance to the vehicle ahead

The distance to the vehicle ahead can be selected at any time.

Each time the DISTANCE switch Ⓐ is pushed, the set distance will change to long, middle, short and back to long again in that sequence.

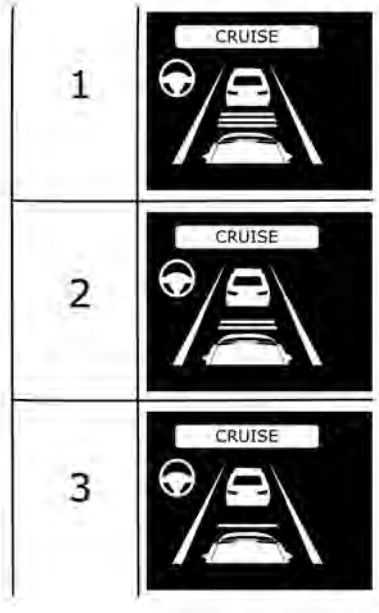

LSD2806

	Distance	Approximate distance at 60 mph (100 km/h) [ft (m)]
1.	Long	200 (60)
2.	Middle	150 (45)
3.	Short	90 (30)

- The distance to the vehicle ahead changes automatically according to the vehicle speed. The higher the vehicle speed, the longer the distance.
- The distance setting will remain at the current setting even if the engine is restarted.

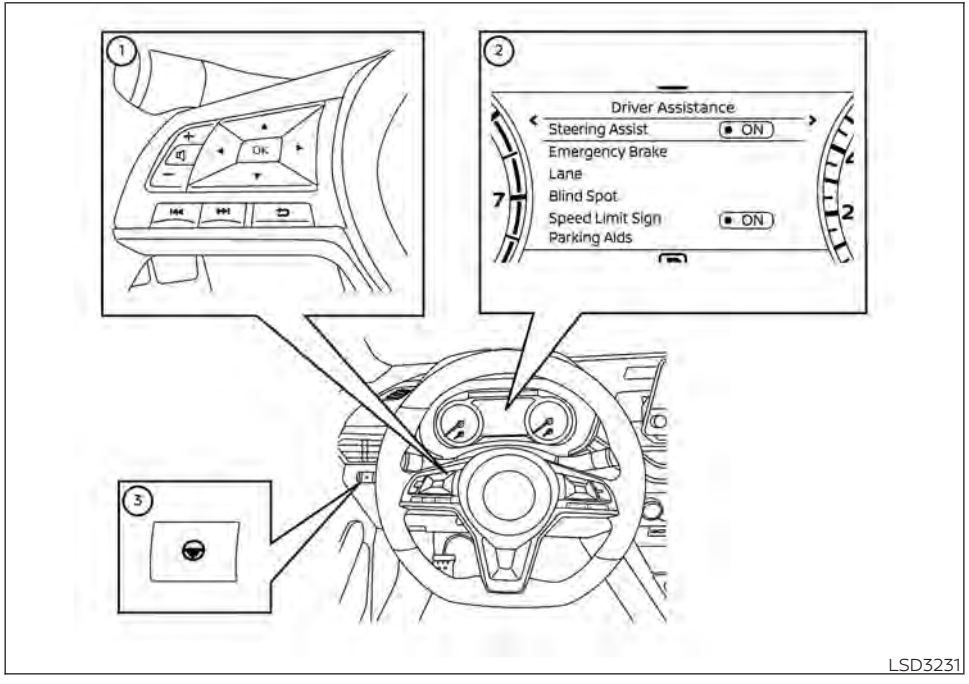

HOW TO ENABLE/DISABLE THE STEERING ASSIST

① Steering-wheel-mounted control (left)

② Vehicle information display

③ Steering Assist switch

Use the following methods to enable or disable the Steering Assist.

Steering Assist switch:

To turn the Steering Assist on or off, push the Steering Assist switch ③ on the instrument panel.

NOTE:

- **When the Steering Assist switch is used to turn the system on or off, the system remembers the setting even if the ignition switch is cycled. The switch must be pushed again to change the setting to on or off.**
- **The Steering Assist switch changes the status of the "Steering Assist" selection made in the "Settings" screen in the vehicle information display.**

Setting in the vehicle information display:

1. Press the ◀▶ button on the steering wheel ① until "Settings" displays in the vehicle information display ②.
2. Use the ▲▼ button ① to select "Driver Assistance." Then press the OK button ①.

3. Use the ▲▼ button ① to select "Steering Assist" and then press the OK button ① to turn the system on or off.

NOTE:

- **When the Cruise screen is displayed on the vehicle information display, press the OK button on the steering wheel to call up the "Driving Aids" setting display.**
- **When enabling/disabling the system through the vehicle information display or when pushing the Steering Assist switch, the system retains the current settings even if the engine is restarted.**

How to cancel the ProPILOT Assist system

To cancel the ProPILOT Assist system, use one of the following methods:

- Push the CANCEL switch.
- Tap the brake pedal (except at a standstill).
- Push the ProPILOT Assist switch to turn the system off. The ProPILOT Assist status indicator will go out.

When the ProPILOT Assist system is canceled while the vehicle is stopped, the electronic parking brake is automatically activated.

⚠ WARNING

To prevent the vehicle from moving or rolling unexpectedly, which could result in serious personal injury or property damage, before exiting the vehicle make sure to push the ProPILOT Assist switch to turn the system off, place the shift lever in the P (Park) position, and turn the engine off.

INTELLIGENT CRUISE CONTROL (ICC) (for vehicles with ProPILOT Assist)

⚠ WARNING

Failure to follow the warnings and instructions for proper use of the ICC system could result in serious injury or death.

- **The ICC system is only an aid to assist the driver and is not a collision warning or avoidance device. It is recommended for highway use only and it is not intended for city driving. It is the driver's responsibility to stay alert, drive safely, and be in control of the vehicle at all times.**
- **There are limitations to the ICC system capability. The ICC system does not function in all driving, traffic, weather, and road conditions. It is the driver's responsibility to stay alert, drive safely, keep the vehicle in the traveling lane, and be in control of the vehicle at all times.**
- **Always observe posted speed limits and do not set the speed over them.**
- **The ICC system does not react to stationary and slow moving vehicles.**

- **Always drive carefully and attentively when using the ICC system. Read and understand the Owner's Manual thoroughly before using the ICC system. To avoid serious injury or death, do not rely on the system to prevent accidents or to control the vehicle's speed in emergency situations. Do not use the ICC system except in appropriate road and traffic conditions.**

ICC system operation

The ICC system is designed to maintain a selected distance from the vehicle in front of you and can reduce the speed to match a slower vehicle ahead. The system decelerates the vehicle as necessary and if the vehicle ahead comes to a stop, the vehicle decelerates to a standstill. However, the ICC system can only apply up to 40% of the vehicle's total braking power. This system should only be used when traffic conditions allow vehicle speeds to remain fairly constant or when vehicle speeds change gradually. If a vehicle moves into the traveling lane ahead or if a vehicle traveling ahead rapidly decelerates, the distance between vehicles may become closer because the ICC system cannot decelerate the vehicle quickly enough. If this occurs, the ICC system sounds a warning chime and blinks the system display to notify the driver to take necessary action.

The ICC system cancels and a warning chime sounds if the speed is below approximately 15 mph (24 km/h) and a vehicle is not detected ahead.

The ICC system operates as follows:

- When there are no vehicles traveling ahead, the ICC system maintains the speed set by the driver. The set speed range is between approximately 20 and 90 mph (32 and 144 km/h).
- When there is a vehicle traveling ahead, the ICC system adjusts the speed to maintain the distance, selected by the driver, from the vehicle ahead. If the vehicle ahead comes to a stop, the vehicle decelerates to a standstill. Once your vehicle stops, the ICC system keeps the vehicle stopped.
- When your vehicle is stopped for less than 3 seconds and the vehicle ahead begins to move, your vehicle will start moving again automatically.
- When your vehicle is at a standstill for more than 3 seconds and the vehicle ahead begins to accelerate, push the RES+ switch or lightly depress the accelerator pedal. The ICC system starts to follow the vehicle ahead.
- When the vehicle traveling ahead moves to a different traveling lane, the ICC system accelerates and maintains vehicle speed up to the set speed.

The ICC system does not control vehicle speed or warn you when you approach stationary and slow moving vehicles. You must pay attention to vehicle operation to maintain proper distance from vehicles ahead when approaching toll gates or traffic congestion.

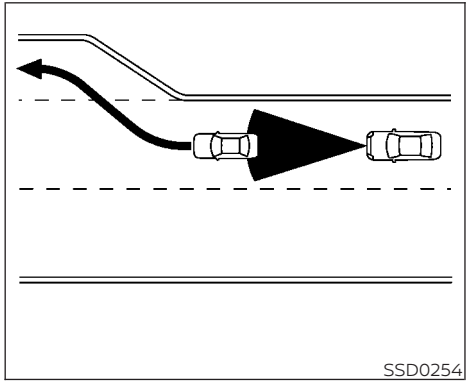

When driving on the freeway at a set speed and approaching a slower traveling vehicle ahead, the ICC system adjusts the speed to maintain the distance, selected by the driver, from the vehicle ahead. If the vehicle ahead changes lanes or exits the freeway, the ICC system accelerates and maintains the speed up to the set speed. Pay attention to the driving operation to maintain control of the vehicle as it accelerates to the set speed.

The vehicle may not maintain the set speed on winding or hilly roads. If this occurs, you will have to manually control the vehicle speed.

Normally when controlling the distance to a vehicle ahead, the system automatically accelerates or decelerates your vehicle according to the speed of the vehicle ahead.

Depress the accelerator to properly accelerate your vehicle when acceleration is required for a lane change. Depress the brake pedal when deceleration is required to maintain a safe distance to the vehicle ahead due to sudden braking or if a vehicle cuts in. Always stay alert when using the ICC system.

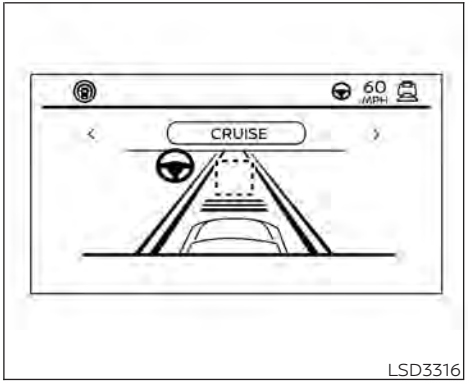

System set display with no vehicle detected ahead

No vehicle detected ahead

The driver sets the desired vehicle speed based on the road conditions. The ICC system maintains the set vehicle speed, similar to standard cruise control, as long as no vehicle is detected in the lane ahead. The ICC system displays the set speed.

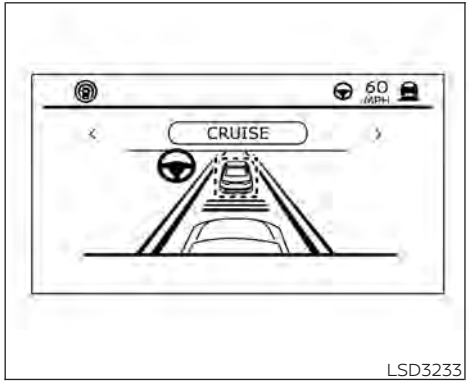

System set display with vehicle ahead

Vehicle detected ahead

When a vehicle is detected in the lane ahead, the ICC system decelerates the vehicle by controlling the throttle and applying the brakes to match the speed of a slower vehicle ahead. The ICC system then controls the vehicle speed based on the speed of the vehicle ahead to maintain the driver selected distance.

NOTE:

- **The stop lights of the vehicle come on when braking is performed by the ICC system.**
- **When the brake is applied by the system, a noise may be heard. This is not a malfunction.**

When the ICC system detects a vehicle ahead, the vehicle ahead detection indicator and the speed control status indicator (distance control mode) illuminates (solid green).

Vehicle ahead stops

When the vehicle ahead decelerates to stop, your vehicle decelerates to a standstill. Once your vehicle stops, the ICC system automatically applies the brakes to keep the vehicle stopped. When your vehicle is at a standstill, the "(RES+) Press to start" message is displayed on the vehicle information display.

NOTE:

When your vehicle stops for less than 3 seconds, your vehicle will automatically follow the vehicle as it accelerates from a stop.

Vehicle ahead accelerates

When your vehicle is stopped and the vehicle ahead begins to accelerate, push the RES+ switch or lightly depress the accelerator pedal. The ICC system starts to follow the vehicle ahead.

Vehicle ahead not detected

When a vehicle is no longer detected ahead, the ICC system gradually accelerates your vehicle to resume the previously set vehicle speed. The ICC system then maintains the set speed.

When a vehicle is no longer detected, the vehicle ahead detection indicator turns off and speed control status indicator (maintain speed control mode) illuminates (green outline).

The ICC system gradually accelerates to the set speed, but you can depress the accelerator pedal to quickly accelerate. When a vehicle is no longer detected and your vehicle is traveling under approximately 15 mph (24 km/h), the ICC system automatically cancels.

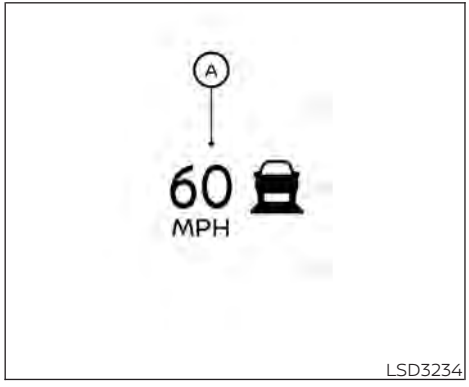

When passing another vehicle, the set speed indicator Ⓐ flashes when the vehicle speed exceeds the set speed. The vehicle ahead detection indicator turns off when the area ahead of the vehicle is open. When the pedal is released, the vehicle returns to the previously set speed. Even though your vehicle speed is set in the ICC system, you can depress the accelerator pedal when it is necessary to accelerate your vehicle rapidly.

Cut-in detection

If a vehicle moves into your traveling lane near your vehicle, the ICC system may inform the driver by flashing the vehicle ahead detection indicator.

Approach warning

If your vehicle comes closer to the vehicle ahead due to rapid deceleration of that vehicle or if another vehicle cuts in, the system warns the driver with the chime and ICC system display. Decelerate by depressing the brake pedal to maintain a safe vehicle distance if:

- The chime sounds.
- The vehicle ahead detection indicator and set distance indicator blink.
- You judge it necessary to maintain a safe distance.

The warning chime may not sound in some cases when there is a short distance between vehicles. Some examples are:

- When the vehicles are traveling at the same speed and the distance between vehicles is not changing.
- When the vehicle ahead is traveling faster and the distance between vehicles is increasing.
- When a vehicle cuts in near your vehicle.

The warning chime will not sound when:

- Your vehicle approaches other vehicles that are parked or moving slowly.
- The accelerator pedal is depressed, overriding the system.

NOTE:

The approach warning chime may sound and the system display may flash when the radar sensor detects objects on the side of the vehicle or on the side of the road. This may cause the ICC system to decelerate or accelerate the vehicle. The radar sensor may detect these objects when the vehicle is driven on winding, narrow, or hilly roads or when the vehicle is entering or exiting a curve. In these cases, you will have to manually control the proper distance ahead of your vehicle.

Also, the sensor sensitivity can be affected by vehicle operation (steering maneuver or driving position in the lane) or traffic or vehicle conditions (for example, if a vehicle is being driven with some damage).

Acceleration when passing

When the ICC system is engaged above 43 mph and following a slower vehicle (below ICC set speed), and the turn signal is activated to the left, the ICC system will automatically start to accelerate the vehicle to help initiate passing on the left and will begin to reduce the distance to vehicle directly ahead. Only the left side turn signal operates this feature. As the driver steers the vehicle and moves into the passing lane, if no vehicle is detected ahead the ICC system will continue to accelerate to the ICC system set speed. If another vehicle is detected ahead, then the vehicle will accelerate up to the following speed of that vehicle. If the vehicle is not steered into the left lane to pass, the acceleration will stop after a short time and regain the set following distance. Acceleration can be stopped at any point by depressing the brake pedal or the CANCEL switch on the steering wheel.

⚠WARNING

In order to reduce the risk of a collision that may result in serious injury or death, please be aware of the following:

- **This function is only activated with the left turn signal and will briefly accelerate the vehicle even if a lane change is not initiated. This can include non-passing situations such as left side exits.**
- **Ensure that when passing another vehicle, the adjacent lane is clear before initiating the pass. Sudden changes in traffic may occur while passing- always manually steer or brake as needed- never solely rely on the system.**

ICC system limitations

⚠WARNING

Listed below are the system limitations for the ICC system. Failure to operate the vehicle in accordance with these system limitations could result in serious injury or death:

- **The ICC system is primarily intended for use on straight, dry, open roads with light traffic. It is not advisable to use the ICC system in city traffic or congested areas.**
- **The ICC system will not adapt automatically to road conditions. This system should be used in evenly flowing traffic. Do not use the system on roads with sharp curves or on icy roads, in heavy rain or in fog.**
- **As there is a performance limit to the distance control function, never rely solely on the ICC system. This system does not correct careless, inattentive or absentminded driving or overcome poor visibility in rain, fog, or other bad weather. Decelerate the vehicle speed by depressing the brake pedal, depending on the distance to the vehicle ahead and the surrounding circumstances in order to maintain a safe distance between vehicles.**
- **When the ICC system automatically brings the car to a stop, your vehicle can automatically accelerate if the vehicle is stopped for less than approximately 3 seconds. Be prepared to stop your vehicle if necessary.**

- **Always pay attention to the operation of the vehicle and be ready to manually control the proper following distance. The ICC system may not be able to maintain the selected distance between vehicles (following distance) or selected vehicle speed under some circumstances.**
- **The system may not detect the vehicle in front of you in certain road or weather conditions. To avoid accidents, never use the ICC system under the following conditions:**
  - **On roads with heavy, high-speed traffic or sharp curves**
  - **On slippery road surfaces such as on ice or snow, etc.**
  - **During bad weather (rain, fog, snow, etc.)**
  - **When rain, snow or dirt adhere to the bumper around the distance sensor**
  - **On steep downhill roads (the vehicle may go beyond the set vehicle speed and frequent braking may result in overheating the brakes)**
  - **On repeated uphill and downhill roads**
  - **When traffic conditions make it difficult to keep a proper distance between vehicles because of frequent acceleration or deceleration**
  - **Interference by other radar sources.**
- **Do not use the ICC system if you are towing a trailer. The system may not detect a vehicle ahead.**
- **In some road or traffic conditions, a vehicle or object can unexpectedly come into the sensor detection zone and cause automatic braking. Always stay alert and avoid using the ICC system where not recommended in this warning section.**

The ICC system will not detect the following objects:

- Stationary or slow moving vehicles
- Pedestrians or objects in the roadway
- Oncoming vehicles in the same lane
- Motorcycles traveling offset in the travel lane

The following are some conditions in which the radar sensor cannot properly detect a vehicle ahead and the system may not operate properly:

- When the sensor detection is reduced (conditions such as rain, snow, fog, dust storms, sandstorms, and road spray from other vehicles)
- Driving on a steep downhill slope or roads with sharp curves
- Driving on a bumpy road surface, such as an uneven dirt road
- If dirt, ice, snow or other material is covering the radar sensor area
- A complicated-shaped vehicle such as a car carrier trailer or flatbed truck/trailer is near the vehicle ahead.
- Interference by other radar sources
- When your vehicle is towing a trailer, etc.
- When excessively heavy baggage is loaded in the rear seat or cargo area of your vehicle.

The ICC system is designed to automatically check the radar sensor's operation within the limitations of the system.

The detection zone of the radar sensor is limited. A vehicle ahead must be in the detection zone for the ICC system to maintain the selected distance from the vehicle ahead. A vehicle ahead may move outside of the detection zone due to its position within the same lane of travel. Motorcycles may not be detected in the same lane ahead if they are traveling offset from the center line of the lane. A vehicle that is entering the lane ahead may not be detected until the vehicle has completely moved into the lane.

If this occurs, the ICC system may warn you by blinking the system indicator and sounding the chime. The driver may have to manually control the proper distance away from the vehicle traveling ahead.

The ICC system (with ProPILOT Assist) uses a multi-sensing front camera. The following are some conditions in which the camera may not properly detect a vehicle and detection of a vehicle ahead may be delayed:

- Poor visibility (conditions such as rain, snow, fog, dust storms, sandstorms, and road spray from other vehicles)
- The camera area of the windshield is fogged up or covered with dirt, water drops, ice, snow, etc.
- Strong light (for example, sunlight or high beams from oncoming vehicles) enters the front camera
- A sudden change in brightness occurs (for example, when the vehicle enters or exits a tunnel or shaded area or lightning flashes)

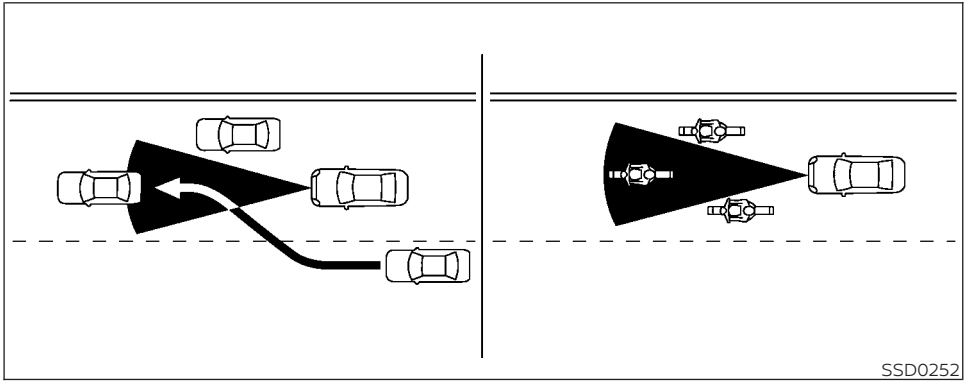

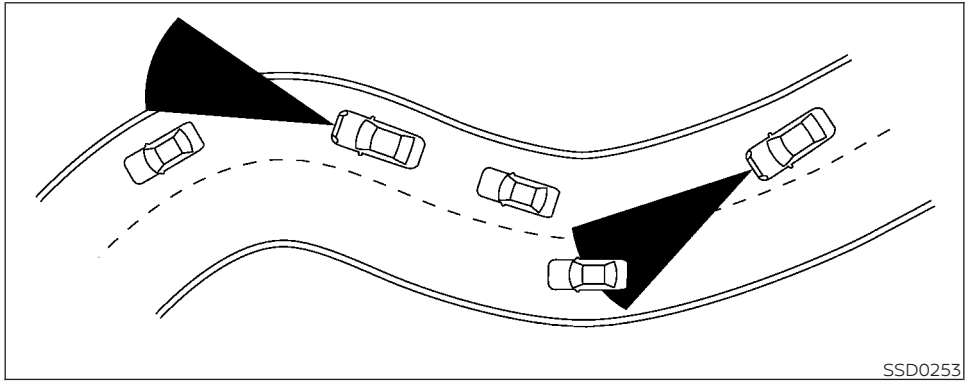

When driving on some roads, such as winding, hilly, curved, narrow roads, or roads which are under construction, the radar sensor may detect vehicles in a different lane, or may temporarily not detect a vehicle traveling ahead. This may cause the radar system to decelerate or accelerate the vehicle.

The detection of vehicles may also be affected by vehicle operation (steering maneuver or traveling position in the lane, etc.) or vehicle condition.

If this occurs, the ICC system may warn you by blinking the system indicator and sounding the chime unexpectedly. You will have to manually control the proper distance away from the vehicle traveling ahead.

System Temporarily Unavailable

The following are conditions in which the ICC system may be temporarily unavailable. In these instances, the ICC system may not cancel and may not be able to maintain the selected following distance from the vehicle ahead.

Condition A

Under the following conditions, the ICC system is automatically canceled. A chime will sound and the system will not be able to be set:

- Any door is open.
- The driver's seat belt is not fastened.
- The vehicle ahead is not detected and your vehicle is traveling below the speed of 15 mph (24 km/h).
- Your vehicle has been stopped by the ICC system for approximately 3 minutes or longer.
- The shift lever is not in the D (Drive) position or manual shift mode.
- The electronic parking brake is applied.
- The VDC system is turned off.
- The AEB with Pedestrian Detection applies harder braking.
- VDC (including the traction control system) operates.
- A wheel slips.
- When the radar signal is temporarily interrupted.

Action to take:

When the conditions listed above are no longer present, turn the system off using the ProPILOT Assist switch. Turn the ProPILOT Assist system back on to use the system.

NOTE:
When the ICC system is canceled under the following conditions at a standstill, the electronic parking brake is automatically activated:

- **Any door is open.**
- **The driver's seat belt is not fastened.**
- **Your vehicle has been stopped by the ICC system for approximately 3 minutes or longer.**
- **The shift lever is not in the D (Drive) position or manual shift mode.**
- **The VDC system is turned off.**
- **When distance measurement becomes impaired due to adhesion of dirt or obstruction to the sensor.**
- **When the radar signal is temporarily interrupted.**

Condition B

When there is inclement weather (rain, fog, snow, etc.) blocking the front radar sensor, the ICC system will automatically be canceled, the chime will sound and the "Forward Driving Aids temporarily disabled Front Sensor blocked See Owner's Manual" warning message will appear in the vehicle information display.

Action to take:

When the conditions listed above are no longer present, the warning message will no longer be available in the vehicle information display and the system will operate normally. If the "Forward Driving Aids temporarily disabled Front Sensor blocked See Owner's Manual" warning message continues to be displayed, have the system checked. It is recommended that you visit a NISSAN dealer for this service.

Condition C

When the radar sensor of the front bumper is covered with dirt or is obstructed, the ICC system will automatically be canceled.

The chime will sound and the "Forward Driving Aids temporarily disabled Front Sensor blocked See Owner's Manual" warning message will appear in the vehicle information display.

Action to take:

If the warning message appears, stop the vehicle in a safe place, place the shift lever in the P (Park) position, and turn the engine off. When the radar signal is temporarily interrupted, clean the sensor area of the front bumper and restart the engine. If the "Forward Driving Aids temporarily disabled Front Sensor blocked See Owner's Manual" warning message continues to be displayed, have the system checked. It is recommended that you visit a NISSAN dealer for this service.

Condition D

When driving on roads with limited road structures or buildings (for example, long bridges, deserts, snow fields, driving next to long walls), the system may illuminate the system warning light and display the "Forward Driving Aids temporarily disabled Front Sensor blocked See Owner's Manual" warning message.

Action to take:

When the above driving conditions no longer exist, turn the system back on.

ICC system malfunction

If the ICC system malfunctions, it will be turned off automatically, a chime will sound, and the speed control status warning (orange) will illuminate.

Action to take:

If the warning light comes on, stop the vehicle in a safe place. Turn the engine off, restart the engine and set the ICC system again. If it is not possible to set the ICC system or the indicator stays on, it may be a malfunction. Although the normal driving can be continued, the ICC system should be inspected. It is recommended that you visit a NISSAN dealer for this service.

NOTE:

If the ICC system is temporarily unavailable, the conventional cruise control mode may still be used. For additional information, please see "Conventional (fixed speed) cruise control mode" (P. 5-123).

ICC sensor maintenance

The radar sensor is located on the front of the vehicle.

To keep the ICC system operating properly, be sure to observe the following:

- Always keep the sensor area of the front bumper/emblem clean.
- Do not strike or damage the areas around the sensor.
- Do not attach a sticker (including transparent material) or install an accessory near the sensor. This could cause failure or malfunction.
- Do not attach metallic objects near the sensor area (brush guard, etc.). This could cause failure or malfunction.
- Do not alter, remove, or paint the front bumper.

Before customizing or restoring the front bumper, it is recommended that you visit a NISSAN dealer.

The camera sensor is located above the inside mirror.

To keep the proper operation of the systems and prevent a system malfunction, be sure to observe the following:

- Always keep the windshield clean.
- Do not attach a sticker (including transparent material) or install an accessory near the camera unit.
- Do not place reflective materials, such as white paper or a mirror, on the instrument panel. The reflection of sunlight may adversely affect the camera unit's capability of detecting the lane markers.
- Do not strike or damage the areas around the camera unit. Do not touch the camera lens or remove the screw located on the camera unit.

If the camera unit is damaged due to an accident, it is recommended that you visit a NISSAN dealer.

STEERING ASSIST

⚠ WARNING

Failure to follow the warnings and instructions for proper use of the Steering Assist could result in serious injury or death.

- **The Steering Assist is not a replacement for proper driving procedures and is not designed to correct careless, inattentive or absent-minded driving. The Steering Assist will not always steer the vehicle to keep it in the lane. It is not designed to prevent loss of control. It is the driver's responsibility to stay alert, drive safely, keep the vehicle in the traveling lane, and be in control of the vehicle at all times.**
- **As there is a performance limit to the Steering Assist's capability, never rely solely on the system. The Steering Assist does not function in all driving, traffic, weather, and road conditions. Always drive safely, pay attention to the operation of the vehicle, and manually control your vehicle appropriately.**
- **The Steering Assist is intended for use on well-developed freeways or highways with gentle (moderate) curves. To avoid risk of an accident, do not use this system on local or non-highway roads.**
- **The Steering Assist only steers the vehicle to maintain its position in the center of a lane. The vehicle will not steer to avoid objects in the road in front of the vehicle or to avoid a vehicle moving into your lane.**
- **It is the driver's responsibility to stay alert, drive safely, keep the vehicle in the traveling lane, and be in control of the vehicle at all times. Never take your hands off the steering wheel when driving. Always keep your hands on the steering wheel and drive your vehicle safely.**
- **Always drive carefully and attentively when using the Steering Assist. Read and understand the Owner's Manual thoroughly before using the Steering Assist. To avoid serious injury or death, do not rely on the system to prevent accidents or to control the vehicle's speed in emergency situations. Do not use the Steering Assist except in appropriate road and traffic conditions.**

Steering Assist operation

The Steering Assist controls the steering system to help keep your vehicle near the center of the lane when driving. The Steering Assist is combined with the Intelligent Cruise Control (ICC) system. For additional information, see "Intelligent Cruise Control (ICC) (for vehicles with ProPILOT Assist)" (P. 5-106).

The Steering Assist can be activated when the following conditions are met:

- The ICC system is activated.
- Lane markers on both sides are clearly detected.
- A vehicle ahead is detected (when the vehicle is driven at speeds under 37 mph [60 km/h]).

- The driver grips the steering wheel.
- The vehicle is driven at the center of the lane.
- The turn signals are not operated.
- The windshield wiper is not operated in the high (HI) speed operation (the Steering Assist function is disabled after the wiper operates for approximately 10 seconds).

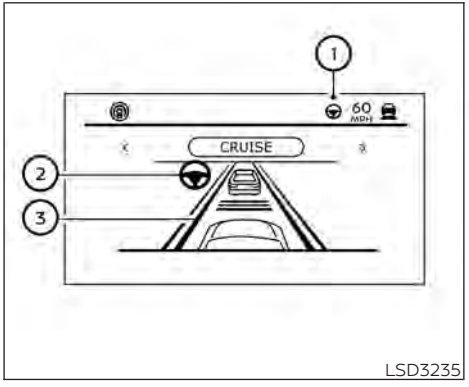

Steering Assist display and indicators

① Steering Assist status indicator/ warning

Displays the status of the Steering Assist by the color of the indicator/warning

- Steering Assist indicator (gray): Steering Assist standby
- Steering Assist indicator (green): Steering Assist active
- Steering Assist indicator (yellow): Steering Assist malfunction

② Steering Assist indicator

Indicates the status of the Steering Assist by the color of the indicator

- Steering Assist indicator (gray): Steering Assist standby
- Steering Assist indicator (green): Steering Assist active

③ Lane marker indicator

Indicates whether the system detects the lane marker

- Lane marker indicator (gray): Lane markers not detected
- Lane marker indicator (green): Lane markers detected
- Lane marker indicator (yellow): Lane departure is detected

When the Steering Assist is in operation, the Steering Assist status indicator ①, the Steering Assist indicator ②, and the lane marker indicator ③ on the vehicle information display turn green. A chime sounds when the Steering Assist initially activates.

When the Steering Assist deactivates, the Steering Assist status indicator ①, the Steering Assist indicator ②, and the lane marker indicator ③ on the vehicle information display turn gray and a chime sounds twice.

Intelligent Lane Intervention (I-LI)

When a curve or strong cross wind exceeds the capabilities of the Steering Assist and your vehicle approaches either the left or the right side of the traveling lane, the I-LI indicator (orange) on the instrument panel flashes to alert the driver. Then, the I-LI system automatically applies the brakes for a short period of time to help assist the driver to return the vehicle to the center of the traveling lane. This action is in addition to any Steering Assist actions.

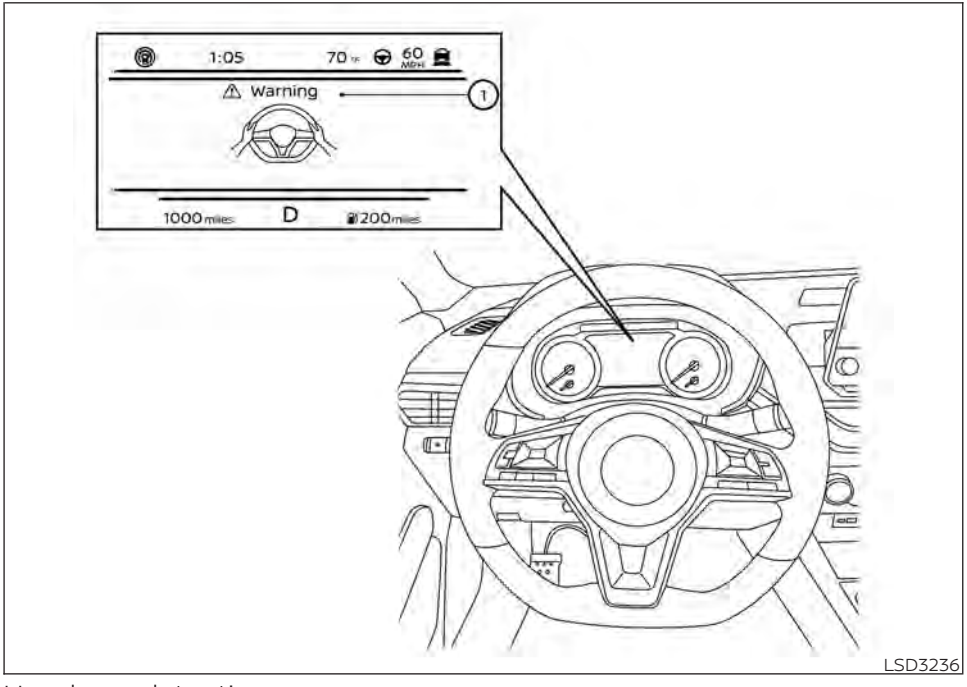

Hands on detection

When the Steering Assist is activated, it monitors the driver's steering wheel operation.

If the steering wheel is not operated or the driver takes his/her hands off the steering wheel for a period of time, the warning ① appears in the vehicle information display.

If the driver does not operate the steering wheel after the warning has been displayed, an audible alert sounds and the warning flashes in the vehicle information display, followed by a quick brake application to request the driver to take control of the vehicle again.

If the driver still does not respond, the ProPILOT Assist turns on the hazard flasher and slows the vehicle to a complete stop.

The driver can cancel the deceleration at any time by steering, braking, accelerating, or operating the ProPILOT Assist switch.

⚠ WARNING

Steering Assist is not a system for hands-free driving. Always keep your hands on the steering wheel and drive your vehicle safely. Failure to do so could cause a collision resulting in serious personal injury or death.

NOTE:

If the driver lightly touches (instead of firmly grips) the steering wheel, the steering torque sensor may not detect the driver's hand(s) on the wheel and a sequence of warnings may occur. When the driver holds and operates the steering wheel again, the warnings turn off.

Steering Assist limitations

⚠ WARNING

- **In the following situations, the camera may not detect lane markers correctly or may detect lane markers incorrectly and the Steering Assist may not operate properly:**
  - **When driving on roads where there are multiple parallel lane markers, lane markers that are faded or not painted clearly, nonstandard lane markers, or lane markers covered with water, dirt, snow, etc.**
  - **When driving on roads with discontinued lane markers**
  - **When driving on roads with a widening or narrowing lane width**
  - **When driving on roads where there are multiple lanes or unclear lane markers due to road construction**
  - **When driving on roads where there are sharply contrasting objects, such as shadows, snow, water, wheel ruts, seams, or lines remaining after road repairs (the Steering Assist could detect these items as lane markers)**
  - **When driving on roads where the traveling lane merges or separates**
- **Do not use the Steering Assist under the following conditions because the system may not properly detect lane markers. Doing so could cause a loss of vehicle control and result in an accident.**
  - **During bad weather (rain, fog, snow, dust, etc.)**
  - **When rain, snow, sand, etc., is thrown up by the wheels of other vehicles**
  - **When dirt, oil, ice, snow, water, or another object adheres to the camera unit**

- **When the lens of the camera unit is foggy**
- **When strong light (for example, sunlight or high beams from oncoming vehicles) shines on the camera**
- **When the headlights are not bright due to dirt on the lens or the headlights are off in tunnels or darkness**
- **When a sudden change in brightness occurs (for example, when the vehicle enters or exits a tunnel or is under a bridge)**
- **When driving on roads where the traveling lane merges or separates or where there are temporary lane markers because of road construction**
- **When there is a lane closure due to road repairs**
- **When driving on a bumpy road surface, such as an uneven dirt road**
- **When driving on sharp curves or winding roads**
- **When driving on repeated uphill and downhill roads**

- **Do not use the Steering Assist under the following conditions because the system will not operate properly:**
  - **When driving with a tire that is not within normal tire conditions (for example, tire wear, abnormal tire pressure, installation of a spare tire, tire chains, nonstandard wheels)**
  - **When the vehicle is equipped with non-original brake or suspension parts**
  - **When an object such as a sticker or cargo obstructs the camera**
  - **When excessively heavy baggage is loaded in the rear seat or luggage area of your vehicle**
  - **When the vehicle load capacity is exceeded**
  - **When towing a trailer or other vehicle**
- **Excessive noise will interfere with the warning chime sound, and the beep may not be heard.**

- **For the ProPILOT Assist system to operate properly, the windshield in front of the camera must be clean. Replace worn wiper blades. The correct size wiper blades must be used to help make sure the windshield is kept clean. Only use Genuine NISSAN wiper blades, or equivalent wiper blades, that are specifically designed for use on your vehicle model and model year. It is recommended that you visit a NISSAN dealer for the correct parts for your vehicle.**

Steering Assist temporary standby

Automatic standby due to driving operation:

When the driver activates the turn signal, the Steering Assist is temporarily placed in a standby mode. (The Steering Assist restarts automatically when the operating conditions are met again.)

Automatic standby:

In the following cases, a warning message is displayed along with the chime, and the Steering Assist is placed in a temporary standby mode. (The Steering Assist restarts automatically when the operating conditions are met again.)

- When lane markers on both sides are no longer detected
- When a vehicle ahead is no longer detected under approximately 37 mph (60 km/h)

Steering Assist cancel

Under the following conditions, the Steering Assist cancels, and the Steering Assist status indicator and the Steering Assist indicator turn off:

- When unusual lane markers appear in the traveling lane or when the lane marker cannot be correctly detected for some time due to certain conditions (for example, a snow rut, the reflection of light on a rainy day, the presence of several unclear lane markers)
- When the windshield wiper operates in the high (HI) speed operation (the Steering Assist is disabled when the wiper operates for more than approximately 10 seconds)

Action to take:

Turn the ICC system off using the CANCEL switch. When the conditions listed above are no longer present, turn the ICC system on again.

Steering Assist malfunction

When the system malfunctions, it turns off automatically. The Steering Assist status warning illuminates (orange). A chime may sound depending on the situation.

Action to take:

Stop the vehicle in a safe location, place the vehicle in the P (Park) position, turn the engine off, restart the engine, resume driving, and set the Intelligent Cruise Control system again. If the warning (orange) continues to illuminate, the Steering Assist is malfunctioning. Although the vehicle is still drivable under normal conditions, have the system checked. It is recommended that you visit a NISSAN dealer for this service.

Steering Assist maintenance

The camera sensor is located above the inside mirror.

To keep the proper operation of the system and prevent a system malfunction, be sure to observe the following:

- Always keep the windshield clean.
- Do not attach a sticker (including transparent material) or install an accessory near the camera unit.
- Do not place reflective materials, such as white paper or a mirror, on the instrument panel. The reflection of sunlight may adversely affect the camera unit's capability of detecting the lane markers.
- Do not strike or damage the areas around the camera unit. Do not touch the camera lens or remove the screw located on the camera unit.

If the camera unit is damaged due to an accident, it is recommended that you visit a NISSAN dealer.

Radio frequency statement

For USA

FCC ID OAYARS4B

This device complies with Part 15 of the FCC Rules. Operation is subject to the following two conditions:

1. This device may not cause harmful interference, and
2. This device must accept any interference received, including interference that may cause undesired operation.

FCC Warning

Changes or modifications not expressly approved by the party responsible for compliance could void the user's authority to operate the equipment.

For Canada

Model: ARS4–B

IC: 4135A-ARS4B

FCC ID: OAYARS4B

This device complies with Part 15 of the FCC Rules and with Industry Canada licence-exempt RSS standard(s). Operation is subject to the following two conditions:

1. This device may not cause interference, and
2. This device must accept any interference received, including interference that may cause undesired operation of the device.

Le présent appareil est conforme aux CNR d'Industrie Canada applicables aux appareils radio exempts de licence. L'exploitation est autorisée aux deux conditions suivantes:

1. L'appareil ne doit pas produire de brouillage, et
2. L'utilisateur de l'appareil doit accepter tout brouillage radioélectrique subi, même si le brouillage est susceptible d'en compromettre le fonctionnement.

Radio frequency radiation exposure information:

This equipment complies with FCC and IC radiation exposure limits set forth for an uncontrolled environment.

This equipment should be installed and operated with minimum distance of 30 cm between the radiator and your body.

This transmitter must not be co-located or operating in conjunction with any other antenna or transmitter.

Cet équipement est conforme aux limites d'exposition aux rayonnements IC établies pour un environnement non contrôlé.

Cet équipement doit être installé et utilisé avec un minimum de 30 cm de distance entre la source de rayonnement et votre corps.

FCC Notice

Changes or modifications not expressly approved by the party responsible for compliance could void the user's authority to operate the equipment.

CONVENTIONAL (fixed speed) CRUISE CONTROL MODE

NOTE:

ProPILOT Assist provides no approach warnings, automatic braking, or steering assist in the conventional (fixed speed) cruise control mode.

This mode allows driving at a speed between 25 to 90 mph (40 to 144 km/h) without keeping your foot on the accelerator pedal.

⚠ WARNING

- **In the conventional (fixed speed) cruise control mode, a warning chime does not sound to warn you if you are too close to the vehicle ahead, as neither the presence of the vehicle ahead nor the vehicle-to-vehicle distance is detected.**
- **Pay special attention to the distance between your vehicle and the vehicle ahead of you or a collision could occur.**
- **Always confirm the setting in the ICC system display.**
- **Do not use the conventional (fixed speed) cruise control mode when driving under the following conditions:**
  - **When it is not possible to keep the vehicle at a set speed**
  - **In heavy traffic or in traffic that varies in speed**
  - **On winding or hilly roads**
  - **On slippery roads (rain, snow, ice, etc.)**
  - **In very windy areas**
- **Doing so could cause a loss of vehicle control and result in an accident.**

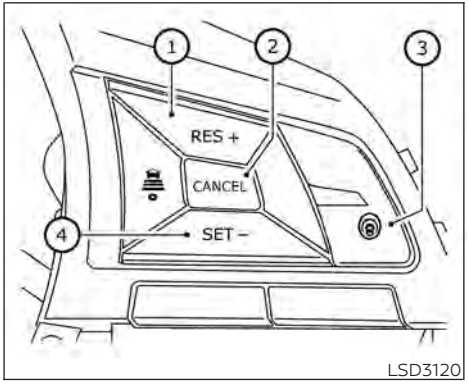

Conventional (fixed speed) cruise control switches

① RES+ switch:
Resumes set speed or increases speed incrementally

② CANCEL switch:
Deactivates the system without erasing the set speed

③ ProPILOT Assist switch:
Turns the ProPILOT Assist system on or off

④ SET- switch:
Sets desired cruise speed or reduces speed incrementally

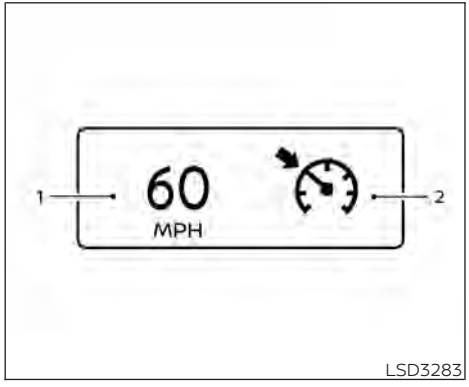

LSD3283

Conventional (fixed speed) cruise control mode display and indicators

The display is located in the vehicle information display.

1. Set vehicle speed indicator:
   This indicator indicates the set vehicle speed. For Canadian models, the speed is displayed in km/h.
2. Cruise indicator:
   This indicator indicates the condition of the ICC system depending on a color.
   - Cruise control ON indicator (gray): Indicates that the ProPILOT Assist switch is on
   - Cruise control SET indicator (green): Indicates that the cruising speed is set
   - Cruise control warning (yellow): Indicates that there is a malfunction in the ICC system

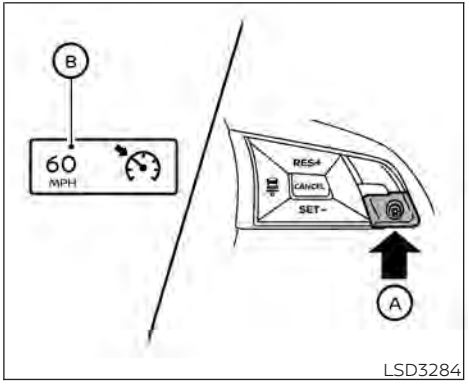

LSD3284

Operating conventional (fixed speed) cruise control mode

To turn on the conventional (fixed speed) cruise control mode, push and hold the ProPILOT Assist switch Ⓐ for longer than about 1.5 seconds.

When pushing the ProPILOT Assist switch on, the conventional (fixed speed) cruise control mode display and indicators Ⓑ are displayed in the vehicle information display. After you hold the ProPILOT Assist switch on for longer than about 1.5 seconds, the ICC system display turns off. The cruise indicator appears. You can now set

your desired cruising speed. Pushing the ProPILOT Assist switch again will turn the system completely off. When the ignition switch is placed in the OFF position, the system is also automatically turned off.

To use the ICC system again, quickly push and release the ProPILOT Assist switch (vehicle-to vehicle distance control mode) or push and hold it (conventional cruise control mode) again to turn it on.

⚠ CAUTION

To avoid accidentally engaging cruise control, make sure to turn the ProPILOT Assist switch off when not using the ICC system.

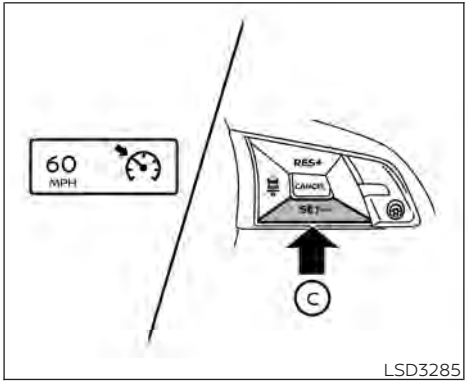

LSD3285

To set cruising speed, accelerate your vehicle to the desired speed, push the SET- Ⓒ switch and release it. (The color of the cruise indicator changes to green and set vehicle speed indicator comes on.) Take your foot off the accelerator pedal. Your vehicle will maintain the set speed.

- To pass another vehicle, depress the accelerator pedal. When you release the pedal, the vehicle will return to the previously set speed.
- The vehicle may not maintain the set speed when going up or down steep hills. If this happens, manually maintain vehicle speed.

To cancel the preset speed, use any of the following methods:

1. Push the CANCEL switch. The vehicle speed indicator will turn off.
2. Tap the brake pedal. The vehicle speed indicator will turn off.
3. Turn the ProPILOT Assist switch off. Both the cruise indicator and vehicle speed indicator will turn off.

To reset at a faster cruising speed, use one of the following three methods:

1. Depress the accelerator pedal. When the vehicle attains the desired speed, push and release the SET- switch.
2. Push and hold the RES+ switch. When the vehicle attains the desired speed, release the switch.
3. Push, then quickly release the RES+ switch. Each time you do this, the set speed will increase by about 1 mph (1.6 km/h).

To reset at a slower cruising speed, use one of the following three methods:

1. Lightly tap the brake pedal. When the vehicle attains the desired speed, push the SET- switch and release it.
2. Push and hold the SET- switch. Release the switch when the vehicle slows down to the desired speed.
3. Push, then quickly release the SET- switch. Each time you do this, the set speed will decrease by about 1 mph (1.6 km/h).

To resume the preset speed, push and release the RES+ switch. The vehicle will resume the last set cruising speed when the vehicle speed is over 25 mph (40 km/h).

REAR AUTOMATIC BRAKING (RAB) (if so equipped)

⚠WARNING

Failure to follow the warnings and instructions for proper use of the RAB system could result in serious injury or death.

- **The RAB system is a supplemental aid to the driver. It is not a replacement for proper driving procedures. Always use the side and rear mirrors and turn and look in the direction you will move before and while backing up. Never rely solely on the RAB system. It is the driver's responsibility to stay alert, drive safely, and be in control of the vehicle at all times.**
- **There is a limitation to the RAB system capability. The RAB system is not effective in all situations.**
- **Inclement weather or ultrasonic sources such as an automatic car wash, a truck's compressed-air brakes or a pneumatic drill may affect the function of the system; this may include reduced performance or a false activation.**

The RAB system can assist the driver when the vehicle is backing up and approaching objects directly behind the vehicle.

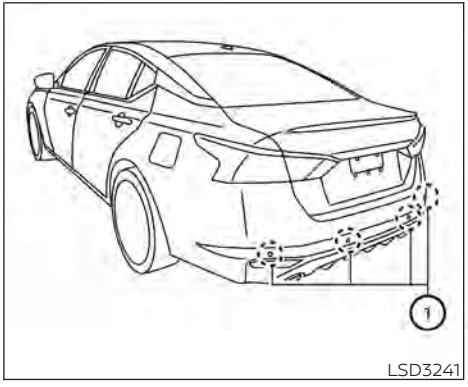

LSD3241

The RAB system detects obstacles behind the vehicle using the parking sensors ① located on the rear bumper.

NOTE:

You can temporarily cancel the sonar function in the vehicle, but the RAB system will continue to operate. For additional information, please see "Rear Sonar System (RSS)" (P. 5-179).

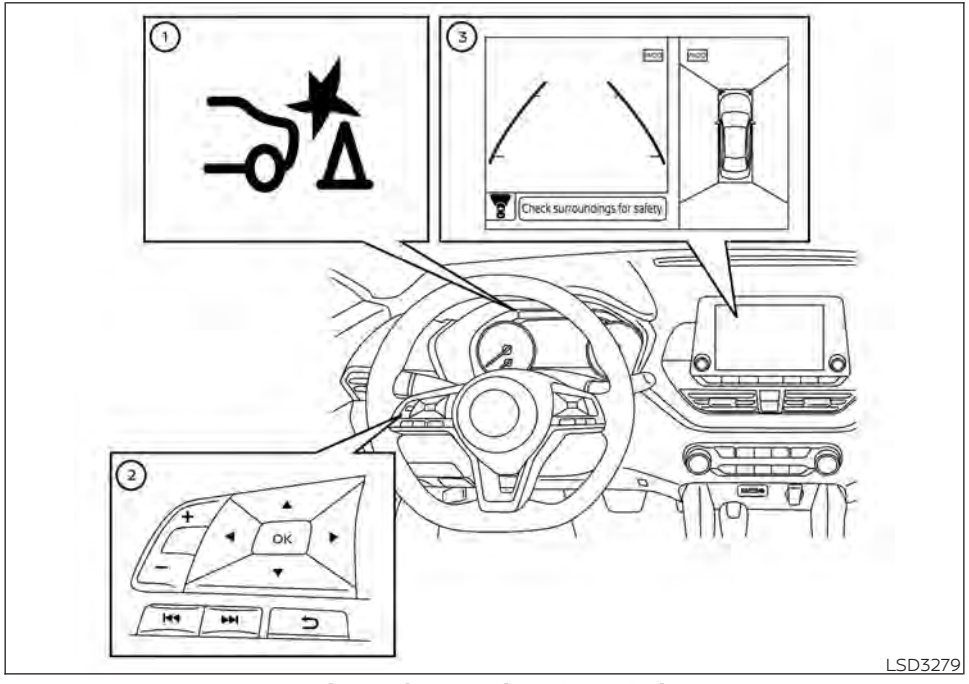

For vehicles with the 7 inch (18 cm) display

RAB SYSTEM OPERATION

① RAB system warning light and RAB system warning indicator

② Steering-wheel-mounted controls (left side)

③ Center display

When the shift lever is in the R (Reverse) position and the vehicle speed is less than approximately 9 mph (15 km/h), the RAB system operates.

If a risk of a collision with an obstacle is detected when your vehicle is backing up, the RAB system warning indicator will flash in the vehicle information display, a red frame will appear in the center display (for vehicles with the Intelligent Around View Monitor system), and the system will chime three times. The system will then automatically apply the brakes. After the automatic brake application, the driver must depress the brake pedal to maintain brake pressure.

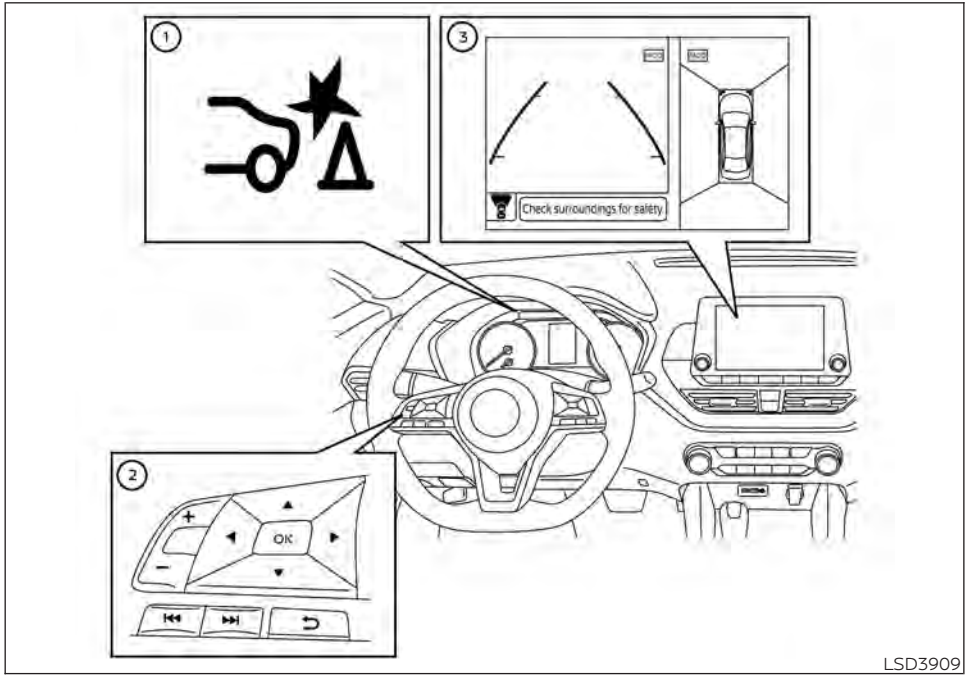

For vehicles with the 5 inch (13 cm) display

NOTE:

- **The brake lights of the vehicle come on when braking is performed by the RAB system.**
- **When the brakes operate, a noise may be heard. This is not a malfunction.**

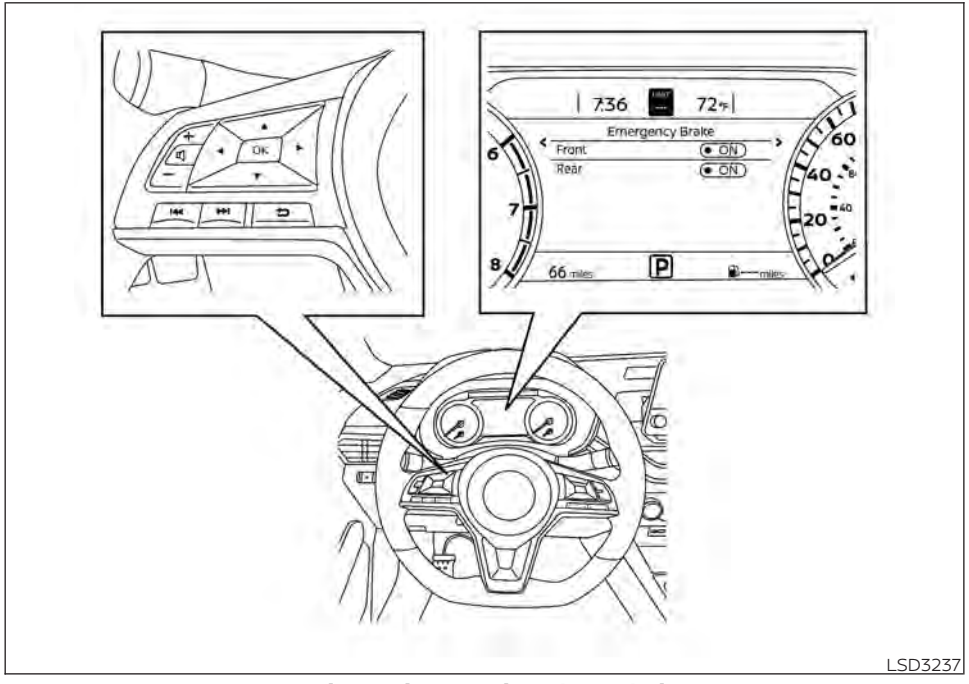

For vehicles with the 7 inch (18 cm) display

TURNING THE RAB SYSTEM ON/OFF

Perform the following steps to turn the RAB system ON or OFF.

For vehicles with the 7 inch (18 cm) display.

1. Press the ◀▶ button until "Settings" displays in the vehicle information display. Use the ▲▼ button to select "Driver Assistance." Then press the OK button.
2. Select "Emergency Brake" and press the OK button.
3. Select "Rear" and press the OK button to turn the system on or off.

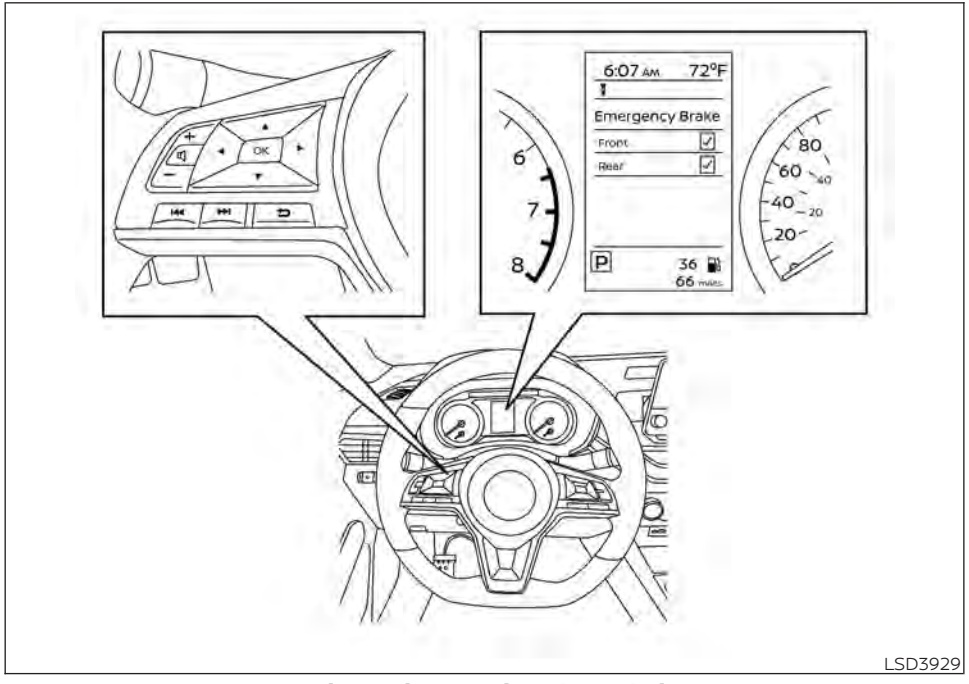

For vehicles with the 5 inch (13 cm) display

For vehicles with the 5 inch (13 cm) display.

1. Press the ◀▶ button until "Settings" displays in the vehicle information display. Use the ▲▼ button to select "Driver Assistance." Then press the OK button.
2. Select "Driving Aids" and press the OK button.
3. Select "Emergency Brake" and press the OK button.
4. Select "Rear" and press the OK button to turn the system on or off.

When the RAB system is turned off, the RAB system warning light illuminates.

NOTE:

The RAB system will be automatically turned on when the engine is restarted.

RAB SYSTEM LIMITATIONS

⚠ WARNING

Listed below are the system limitations for the RAB system. Failure to follow the warnings and instructions for proper use of the RAB system could result in serious injury or death.

- **When the vehicle approaches an obstacle while the accelerator or brake pedal is depressed, the function may not operate or the start of operation may be delayed. The RAB system may not operate or may not perform sufficiently due to vehicle conditions, driving conditions, the traffic environment, the weather, road surface conditions, etc. Do not wait for the system to operate. Operate the brake pedal by yourself as soon as necessary.**
- **If it is necessary to override RAB operation, strongly press the accelerator pedal.**
- **Always check your surroundings and turn to check what is behind you before and while backing up. The RAB system detects stationary objects behind the vehicle. The RAB system does not detect the following objects:**
  - **Moving objects**
  - **Low objects**
  - **Narrow objects**
  - **Wedge-shaped objects**
  - **Objects close to the bumper (less than approximately 1 ft [30 cm])**
  - **Objects that suddenly appear**
  - **Thin objects such as rope, wire, chain, etc.**
- **The RAB system may not operate for the following obstacles:**
  - **Obstacles located high off the ground**
  - **Obstacles in a position offset from your vehicle**
  - **Obstacles, such as spongy materials or snow, that have soft outer surfaces and can easily absorb a sound wave**
- **The RAB system may not operate in the following conditions:**
  - **There is rain, snow, ice, dirt, etc., attached to the sonar sensors.**
  - **A loud sound is heard in the area around the vehicle.**
  - **The surface of the obstacle is diagonal to the rear of the vehicle.**
- **The RAB system may unintentionally operate in the following conditions:**
  - **There is overgrown grass in the area around the vehicle.**
  - **There is a structure (e.g., a wall, toll gate equipment, a narrow tunnel, a parking lot gate) near the side of the vehicle.**
  - **There are bumps, protrusions, or manhole covers on the road surface.**
  - **The vehicle drives through a draped flag or a curtain.**
  - **There is an accumulation of snow or ice behind the vehicle.**
  - **An ultrasonic wave source, such as another vehicle's sonar, is near the vehicle.**

- Once the automatic brake control operates, it does not operate again if the vehicle approaches the same obstacle.
- The automatic brake control can only operate for a short period of time. Therefore, the driver must depress the brake pedal.
- In the following situations, the RAB system may not operate properly or may not function sufficiently:
  - The vehicle is driven in bad weather (rain, fog, snow, etc.).
  - The vehicle is driven on a steep hill.
  - The vehicle's posture is changed (e.g., when driving over a bump).
  - The vehicle is driven on a slippery road.
  - The vehicle is turned sharply by turning the steering wheel fully.
  - Snow chains are used.
  - Wheels or tires other than NISSAN recommended are used.
  - The brakes are cold at low ambient temperatures or immediately after driving has started.
  - The braking force becomes poor due to wet brakes after driving through a puddle or washing the vehicle.
- Turn the RAB system off in the following conditions to prevent the occurrence of an unexpected accident resulting from sudden system operation:
  - The vehicle is towed.
  - The vehicle is carried on a flatbed truck.
  - The vehicle is on the chassis dynamometer.
  - The vehicle drives on an uneven road surface.
  - The vehicle is towing an object (if so equipped).
  - Suspension parts other than those designated as Genuine NISSAN parts are used. (If the vehicle height or the vehicle body inclination is changed, the system may not detect an obstacle correctly.)
  - If the vehicle is using an accessory like a bike rack, or cargo carrier that blocks the sensors.
- Excessive noise (e.g., audio system volume, an open vehicle window) will interfere with the chime sound, and it may not be heard.

SYSTEM MALFUNCTION

If the RAB system malfunctions, it will be turned off automatically, the RAB system warning light will illuminate, and the "Malfunction" warning message will appear in the vehicle information display.

Action to take

If the warning light illuminates, park the vehicle in a safe location, turn the engine off, and restart the engine. If the warning light continues to illuminate, have the RAB system checked. It is recommended that you visit a NISSAN dealer for this service.

NOTE:

If the RAB system cannot be operated temporarily, the RAB system warning light blinks.

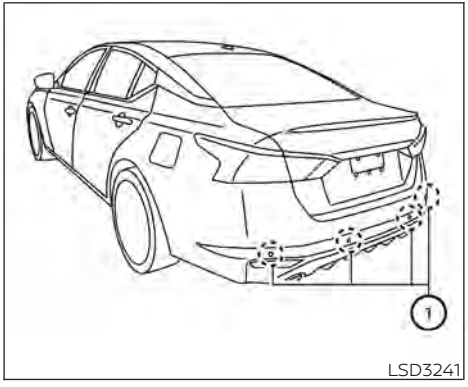

LSD3241

SYSTEM MAINTENANCE

Observe the following items to ensure proper operation of the system:

- Always keep the parking sensors ① clean.
- If the parking sensors are dirty, wipe them off with a soft cloth while being careful to not damage them.
- Do not subject the area around the parking sensors ① to strong impact. Also, do not remove or disassemble the parking sensors. If the parking sensors and peripheral areas are deformed in an accident, etc., have the sensors checked. It is recommended that you visit a NISSAN dealer for this service.
- Do not install any stickers (including transparent stickers) or accessories on the parking sensors ① and their surrounding areas. This may cause a malfunction or improper operation.

AUTOMATIC EMERGENCY BRAKING (AEB) WITH PEDESTRIAN DETECTION

⚠ WARNING

Failure to follow the warnings and instructions for proper use of the AEB with Pedestrian Detection system could result in serious injury or death.

- **The AEB with Pedestrian Detection system is a supplemental aid to the driver. It is not a replacement for the driver's attention to traffic conditions or responsibility to drive safely. It cannot prevent accidents due to carelessness or dangerous driving techniques.**
- **The AEB with Pedestrian Detection system does not function in all driving, traffic, weather and road conditions.**

The AEB with Pedestrian Detection system can assist the driver when there is a risk of a forward collision with the vehicle ahead in the traveling lane or with a pedestrian ahead in the traveling lane.

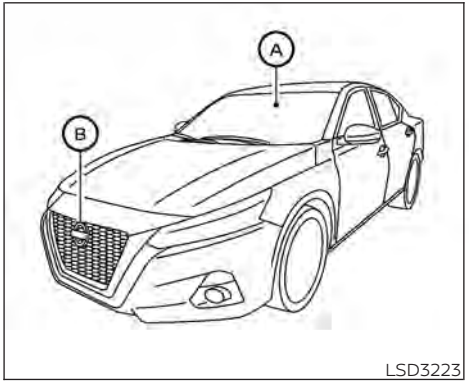

The AEB with Pedestrian Detection system uses a radar sensor located on the front of the vehicle Ⓑ to measure the distance to the vehicle ahead in the same lane. For pedestrians, the AEB with Pedestrian Detection system uses a camera installed behind the windshield Ⓐ in addition to the radar sensor.

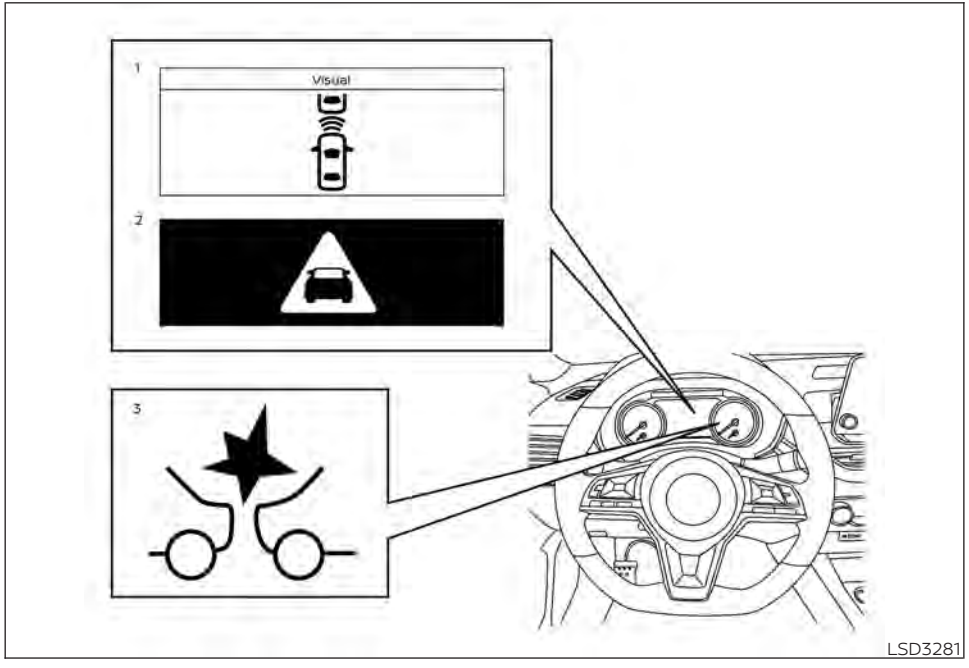

For vehicles with the 7 inch (18 cm) display

1. Vehicle ahead detection indicator
2. AEB with Pedestrian Detection emergency warning indicator
3. AEB with Pedestrian Detection system warning light

AEB WITH PEDESTRIAN DETECTION SYSTEM OPERATION

The AEB system operates at speeds above approximately 3 mph (5 km/h). For the pedestrian detection function, the system operates at speeds between 6 – 37 mph (10 – 60 km/h).

If a risk of a forward collision is detected, the AEB with Pedestrian Detection system will firstly provide the warning to the driver by flashing the vehicle ahead detection indicator (yellow) in the vehicle information display and providing an audible alert. If the driver applies the brakes quickly and forcefully after the warning, and the AEB with Pedestrian Detection system detects that there is still the possibility of a forward collision, the system will automatically increase the braking force.

If the driver does not take action, the AEB with Pedestrian Detection system issues the second visual (flashing) (red and white) and audible warning. If the driver releases the accelerator pedal, then the system applies partial braking. If the risk of a collision becomes imminent, the AEB with Pedestrian Detection system applies harder braking automatically.

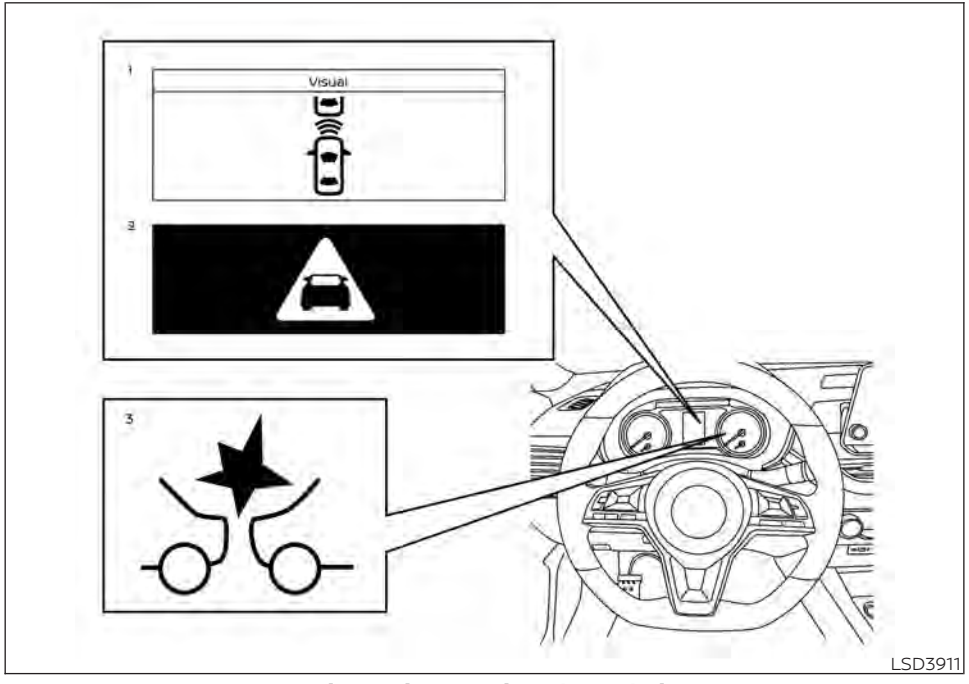

For vehicles with the 5 inch (13 cm) display

While the AEB with Pedestrian Detection system is operating, you may hear the sound of brake operation. This is normal and indicates that the AEB with Pedestrian Detection system is operating properly.

NOTE:

The vehicle's brake lights come on when any braking is performed by the AEB with Pedestrian Detection system.

Depending on vehicle speed and distance to the vehicle or pedestrian ahead, as well as driving and roadway conditions, the system may help the driver avoid a forward collision or may help mitigate the consequences if a collision should be unavoidable. If the driver is handling the steering wheel, accelerating or braking, the AEB with Pedestrian Detection system will function later or will not function.

The automatic braking will cease under the following conditions:

- When the steering wheel is turned to avoid a collision.
- When the accelerator pedal is depressed.
- When there is no longer a vehicle or a pedestrian detected ahead.

If the AEB with Pedestrian Detection system has stopped the vehicle, the vehicle will remain at a standstill for approximately 2 seconds before the brakes are released.

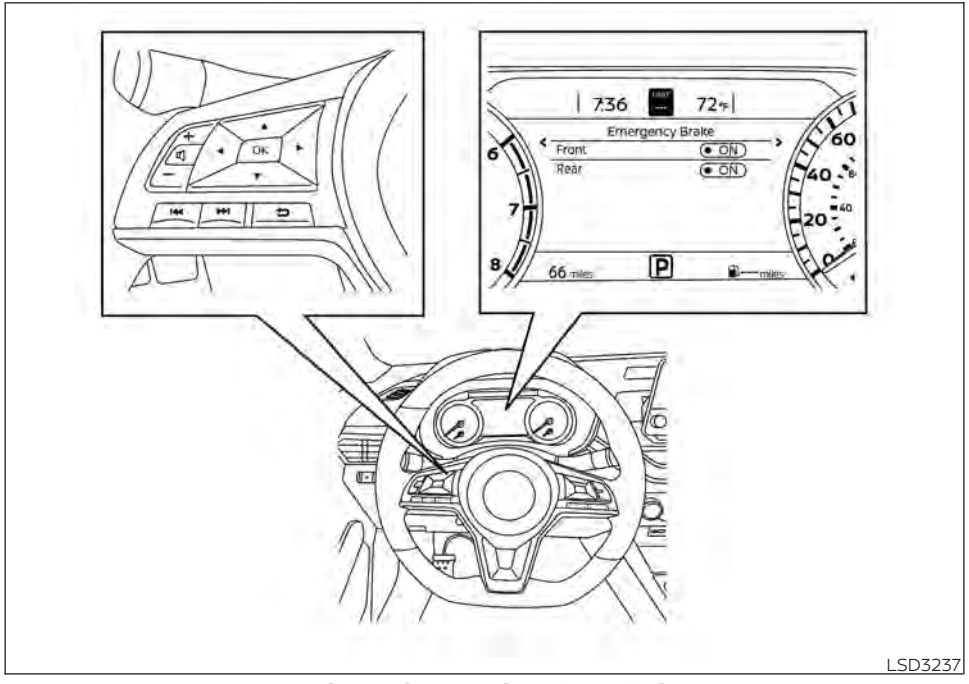

For vehicles with the 7 inch (18 cm) display

TURNING THE AEB WITH PEDESTRIAN DETECTION SYSTEM ON/OFF

Perform the following steps to enable or disable the AEB with Pedestrian Detection system.

For vehicles with the 7 inch (18 cm) display.

1. Press the ◀▶ button until "Settings" displays in the vehicle information display. Use the ▲▼ button to select "Driver Assistance." Then press the OK button.
2. Select "Emergency Brake" and press the OK button.
3. Select "Front" and press the OK button to turn the system on or off.

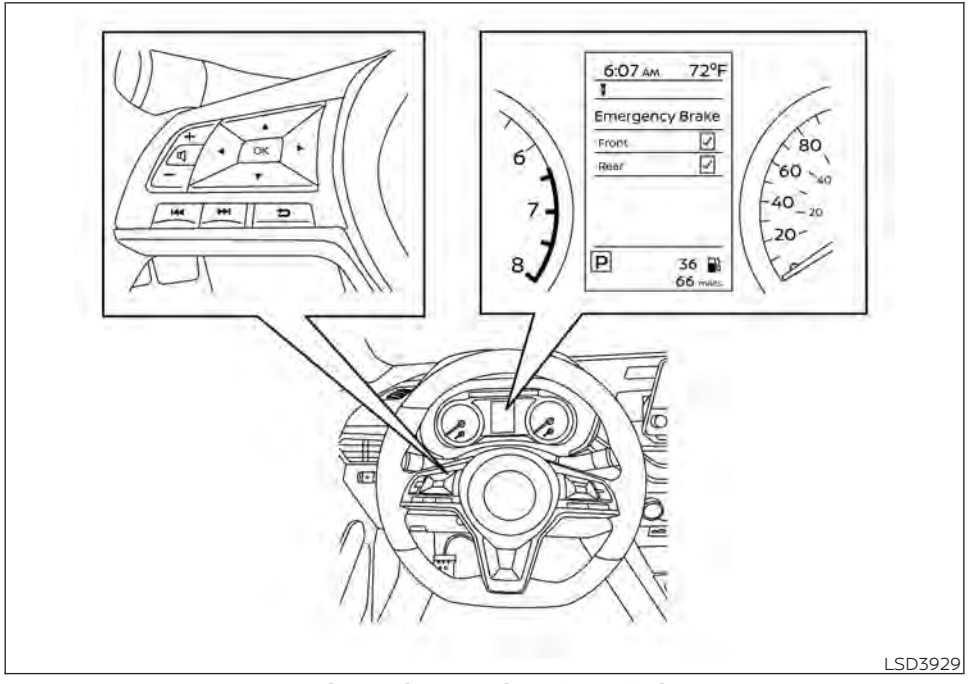

For vehicles with the 5 inch (13 cm) display

For vehicles with the 5inch (13 cm) display.

1. Press the ◀▶ button until "Settings" displays in the vehicle information display. Use the ▲▼ button to select "Driver Assistance." Then press the OK button.
2. Select "Driving Aids" and press the OK button.
3. Select "Emergency Brake" and press the OK button.
4. Select "Front" and press the OK button to turn the system on or off.

When the AEB with Pedestrian Detection system is turned off, the AEB with Pedestrian Detection system warning light illuminates.

NOTE:

- **The AEB with Pedestrian Detection system will be automatically turned on when the engine is restarted.**
- **The I-FCW system is integrated into the AEB with Pedestrian Detection system. There is not a separate selection in the vehicle information display for the I-FCW system. When the AEB system is turned off, the I-FCW system is also turned off.**

AEB WITH PEDESTRIAN DETECTION SYSTEM LIMITATIONS

⚠ WARNING

Listed below are the system limitations for the AEB with Pedestrian Detection system. Failure to operate the vehicle in accordance with these system limitations could result in serious injury or death.

- **The AEB with Pedestrian Detection system cannot detect all vehicles or pedestrians under all conditions.**
- **The AEB with Pedestrian Detection system does not detect the following:**
  - **Pedestrians that are small (for example, children), in a sitting position, operating toys/skateboards, on scooters or in wheelchairs, or not in an upright standing or walking position.**
  - **Animals of any size.**
  - **Obstacles (for example, cargo or debris) on the roadway or roadside.**
  - **Oncoming or crossing vehicles.**
  - **Vehicles where the tires are difficult to see or the shape of the rear of the vehicle is unclear or obstructed.**
  - **Parked vehicles.**
- **The AEB with Pedestrian Detection system has some performance limitations.**
  - **If a stationary vehicle is in the vehicle's path, the system will not function when the vehicle approaches the stationary vehicle at speeds over approximately 50 mph (80 km/h).**
  - **Pedestrian detection will not function when the vehicle is driven at speeds over approximately 37 mph (60 km/h) or below approximately 6 mph (10km/h).**
- **For pedestrians, the AEB with Pedestrian Detection system will not issue the first warning.**
- **The AEB with Pedestrian Detection system may not function properly or detect a vehicle or pedestrians ahead in the following conditions:**
  - **In poor visibility conditions (such as rain, snow, fog, dust storms, sand storms, smoke, and road spray from other vehicles).**
  - **If dirt, ice, snow, fog or other material is covering the radar sensor area or camera area of windshield.**
  - **If a strong light (for example, sunlight or high beams) enters the front camera or a sudden change in brightness occurs (for example, entering a tunnel or driving in lightning).**
  - **In dark or dimly lit conditions, such as at night or in tunnels, including cases where your vehicle's headlights are off or dim, or the tail lights of the vehicle ahead are off.**
  - **When the direction of the camera is misaligned.**
  - **When driving on a steep downhill slope, on roads with sharp curves, and/or bumpy or dirt roads.**
  - **If there is interference by other radar sources.**
  - **When your vehicle's position or movement is changed quickly or significantly (for example, lane change, turning vehicle, abrupt steering, sudden acceleration or deceleration).**

- When your vehicle or the vehicle or pedestrian ahead moves quickly or significantly such that the system cannot detect and react in time (for example, pedestrian moving quickly toward the vehicle at close range, vehicle cutting in, changing lanes, making a turn, steering abruptly, sudden acceleration or deceleration).
- When the vehicle or pedestrian is offset from the vehicle's forward path.
- If the speed difference between the two vehicles is small.
- The pedestrian's profile is partially obscured or unidentifiable; for example, due to transporting luggage, pushing a stroller, wearing bulky or very loose-fitting clothing or accessories, or being in a unique posture (such as raising hands).
- There is poor contrast of a person to the background, such as having clothing color or pattern which is similar to the background.
- For approximately 15 seconds after starting the engine.
- If the vehicle ahead has a unique or unusual shape, extremely low or high clearance heights, or unusual cargo loading or is narrow (for example, a motorcycle).
- When the vehicle or pedestrian is located near a traffic sign, a reflective area (for example, water on road), or is in a shadow.
- When multiple pedestrians are grouped together.
- When the view of the pedestrian is obscured by a vehicle or other object.
- While towing a trailer or other vehicle.

· The system performance may be degraded in the following conditions:
  - The vehicle is driven on a slippery road.
  - The vehicle is driven on a slope.
  - Excessively heavy baggage is loaded in the rear seat or the cargo area of your vehicle.

· The system is designed to automatically check the sensor's (radar and camera) functionality, within certain limitations. The system may not detect some forms of obstruction of the sensor area such as ice, snow or stickers, for example. In these cases, the system may not be able to warn the driver properly. Be sure that you check, clean and clear sensor areas regularly.

· In some road and traffic conditions, the AEB with Pedestrian Detection system may unexpectedly apply partial braking. When acceleration is necessary, depress the accelerator pedal to override the system.

· The AEB with Pedestrian Detection system may operate when a pattern, object, shadow or lights are detected that are similar to the outline of vehicles or pedestrians, or if they are the same size and position as a vehicle or motorcycle's tail lights.

· The system may keep operating when the vehicle ahead is turning right or left.

· The system may operate when your vehicle is approaching and passing a vehicle ahead.

· Depending on the road shape (curved road, entrance and exit of the curve, winding road, lane regulation, under construction, etc.), the system may operate temporarily for the oncoming vehicle in front of your vehicle.

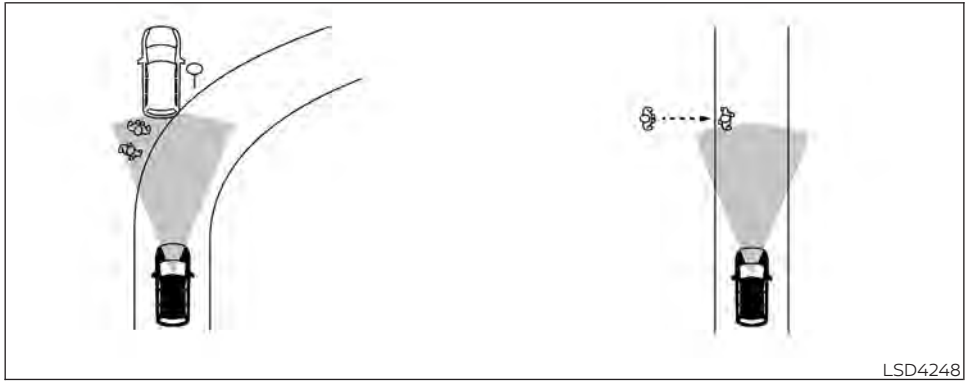

⚠ WARNING

Listed below are the system limitations for the AEB with Pedestrian Detection system. Failure to operate the vehicle in accordance with these system limitations could result in serious injury or death.

- **The AEB with Pedestrian Detection system may react to:**
  - **objects on the roadside (traffic sign, guardrail, pedestrian, motorcycle, vehicle, etc.)**
  - **pedestrians when driving on the narrow alleys, etc.**
  - **pedestrians who temporarily protrude into or approaching the driving lane to avoid the obstacles on the road shoulder**
  - **objects above road (low bridge, traffic sign, etc.)**
  - **objects on the road surface (railroad track, grate, steel plate, etc.)**
  - **objects in the e parking garage (beam, pillar, etc.)**
  - **pedestrians or motorcycles approaching the travelling lane**
  - **vehicles, pedestrians, motorcycles or objects in adjacent lanes or close to the vehicle**
  - **oncoming pedestrians**
  - **objects on the road (such as trees)**
- **Braking distances increase on slippery surfaces.**
- **Excessive noise will interfere with the warning chime sound, and the chime may not be heard.**

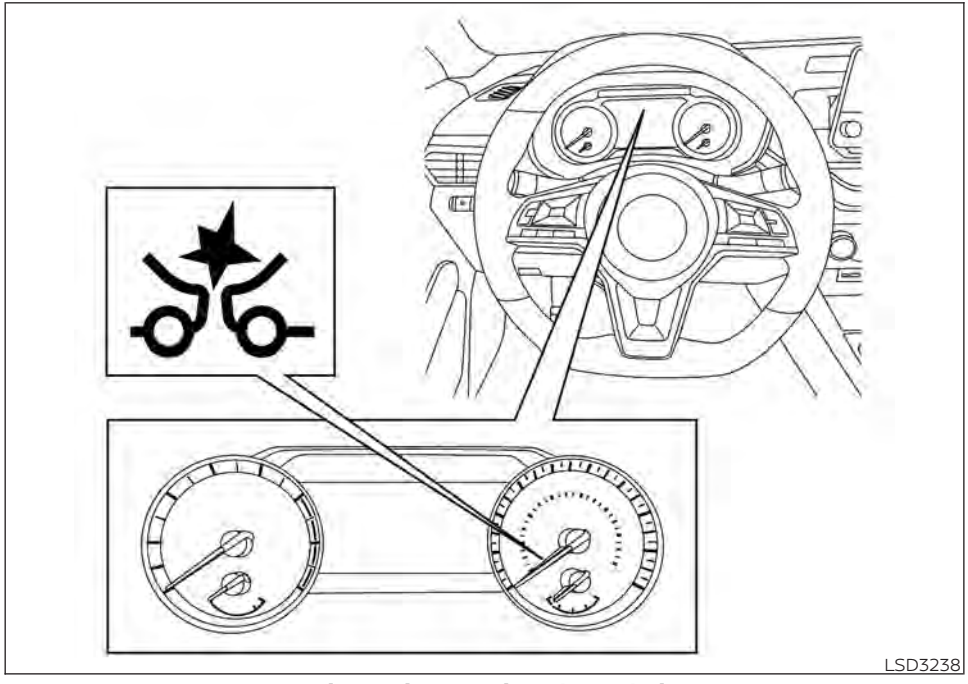

For vehicles with the 7 inch (18 cm) display

SYSTEM TEMPORARILY UNAVAILABLE

Condition A:

In the following conditions, the AEB with Pedestrian Detection system warning light blinks and the system will be turned off automatically:

- The radar sensor picks up interference from another radar source.
- The camera area of the windshield is misted or frozen.
- Strong light is shining from the front.
- The cabin temperature is over approximately 104°F (40°C) in direct sunlight.
- The camera area of the windshield glass is continuously covered with dirt, etc.

Action to take

When the above conditions no longer exist, the AEB with Pedestrian Detection system will resume automatically.

NOTE:

When the inside of the windshield on the camera area is misted or frozen, it will take a period of time to remove it after the A/C turns on. If dirt appears on this area, it is recommended that you visit a NISSAN dealer.

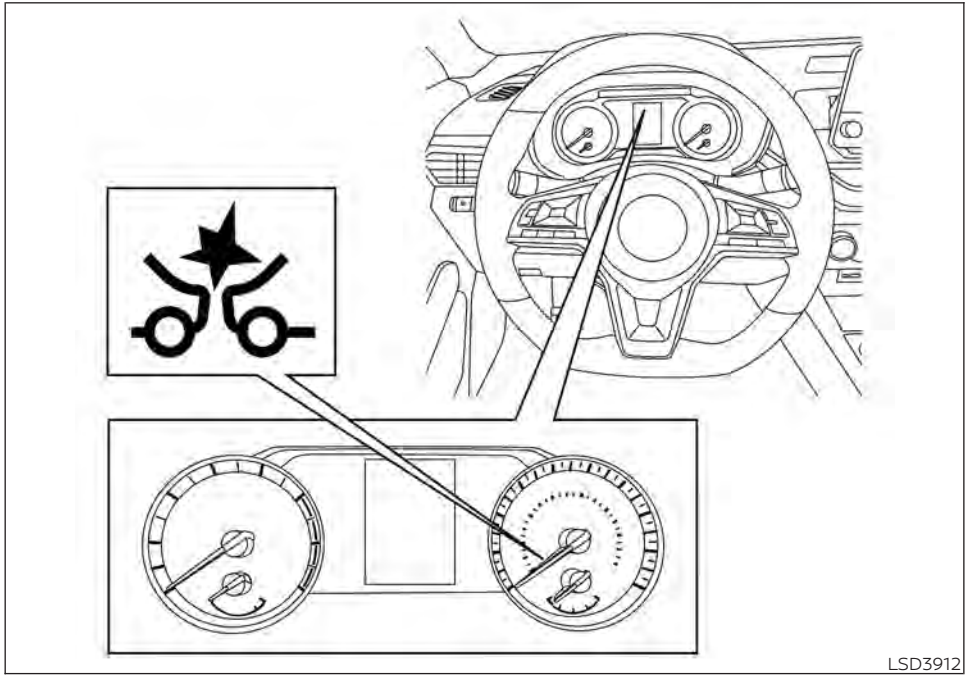

For vehicles with the 5 inch (13 cm) display

Condition B:

When there is inclement weather (rain, fog, snow, etc.) blocking the front radar sensor, the AEB with Pedestrian Detection system will be canceled, the chime will sound and the "Forward Driving Aids temporarily disabled Front Sensor blocked See Owner's Manual" warning message will appear in the vehicle information display.

Action to take:

When the conditions listed above are no longer present, the warning message will no longer be available in the vehicle information display. If the "Forward Driving Aids temporarily disabled Front Sensor blocked See Owner's Manual" warning message continues to be displayed, have the system checked. It is recommended that you visit a NISSAN dealer for this service.

Condition C:

When the radar sensor of the front bumper is covered with dirt or is obstructed, the AEB with Pedestrian Detection system will automatically be canceled. The chime will sound and the "Forward Driving Aids temporarily disabled Front Sensor blocked See Owner's Manual" warning message will appear in the vehicle information display.

Action to take:

If the warning message appears, stop the vehicle in a safe place, place the shift lever in the P (Park) position, and turn the engine off. When the radar signal is temporarily interrupted, clean the sensor area of the front bumper and restart the engine. If the "Forward Driving Aids temporarily disabled Front Sensor blocked See Owner's Manual" warning message continues to be displayed, have the system checked. It is recommended that you visit a NISSAN dealer for this service.

Condition D

When driving on roads with limited road structures or buildings (for example, long bridges, deserts, snowfields, driving next to long walls), the system may illuminate the system warning light and display the "Forward Driving Aids Temporarily Disabled Front Sensor Blocked See Owner's Manual" message.

Action to take:

When the above driving conditions no longer exist, turn the system back on.

NOTE:
If the AEB with Pedestrian Detection system stops working, the I-FCW system will also stop working.

LSD4448

SYSTEM MALFUNCTION

If the AEB with Pedestrian Detection system malfunctions, it will be turned off automatically, a chime will sound, the AEB with Pedestrian Detection system warning light (orange) will illuminate and the warning message [Malfunction] will appear in the vehicle information display.

Action to take

If the warning light (orange) comes on, stop the vehicle in a safe location, turn the engine off and restart the engine. If the warning light continues to illuminate, have the AEB with Pedestrian Detection system checked. It is recommended that you visit a NISSAN dealer for this service.

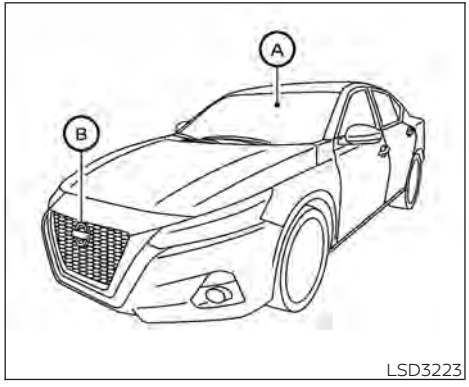

SYSTEM MAINTENANCE

The radar sensor is located on the front of the vehicle Ⓑ. The camera is located on the upper side of the windshield Ⓐ.

To keep the AEB with Pedestrian Detection system operating properly, be sure to observe the following:

- Always keep the sensor areas of the front bumper and windshield clean.
- Do not strike or damage the areas around the sensors (e.g., bumper, windshield).
- Do not cover or attach stickers, or install any accessory near the sensors. This could block sensor signals and/or cause failure or malfunction.
- Do not attach metallic objects near the radar sensor (brush guard, etc.). This could cause failure or malfunction.
- Do not place reflective materials, such as white paper or a mirror, on the instrument panel. The reflection of sunlight may adversely affect the camera unit's detection capability.
- Do not alter, remove or paint the front bumper. Before customizing or restoring the front bumper, it is recommended that you visit a NISSAN dealer.

Radio frequency statement

For USA

FCC ID OAYARS4B

This device complies with Part 15 of the FCC Rules. Operation is subject to the following two conditions:

1. This device may not cause harmful interference, and
2. This device must accept any interference received, including interference that may cause undesired operation.

FCC Warning

Changes or modifications not expressly approved by the party responsible for compliance could void the user's authority to operate the equipment.

For Canada

Model: ARS4–B

IC: 4135A-ARS4B

FCC ID: OAYARS4B

This device complies with Part 15 of the FCC Rules and with Industry Canada licence-exempt RSS standard(s). Operation is subject to the following two conditions:

1. This device may not cause interference, and
2. This device must accept any interference received, including interference that may cause undesired operation of the device.

Le présent appareil est conforme aux CNR d'Industrie Canada applicables aux appareils radio exempts de licence. L'exploitation est autorisée aux deux conditions suivantes:

1. L'appareil ne doit pas produire de brouillage, et

2. L'utilisateur de l'appareil doit accepter tout brouillage radioélectrique subi, même si le brouillage est susceptible d'en compromettre le fonctionnement.

Radio frequency radiation exposure information:

This equipment complies with FCC and IC radiation exposure limits set forth for an uncontrolled environment.

This equipment should be installed and operated with minimum distance of 30 cm between the radiator and your body.

This transmitter must not be co-located or operating in conjunction with any other antenna or transmitter.

Cet équipement est conforme aux limites d'exposition aux rayonnements IC établies pour un environnement non contrôlé.

Cet équipement doit être installé et utilisé avec un minimum de 30 cm de distance entre la source de rayonnement et votre corps.

FCC Notice

Changes or modifications not expressly approved by the party responsible for compliance could void the user's authority to operate the equipment.

⚠ WARNING

Failure to follow the warnings and instructions for proper use of the I-FCW system could result in serious injury or death.

- **The I-FCW system can help warn the driver before a collision occurs but will not avoid a collision. It is the driver's responsibility to stay alert, drive safely and be in control of the vehicle at all times.**

The I-FCW system can help alert the driver when there is a sudden braking of a second vehicle traveling in front of the vehicle ahead in the same lane.

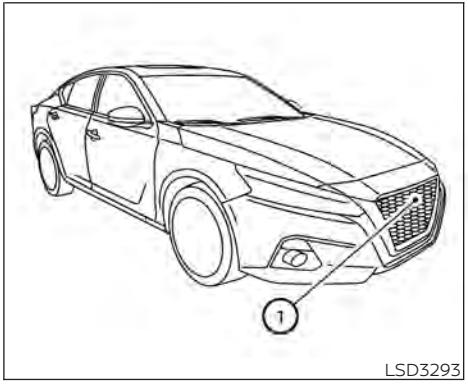

The I-FCW system uses a radar sensor ① located on the front of the vehicle to measure the distance to the vehicle ahead in the same lane.

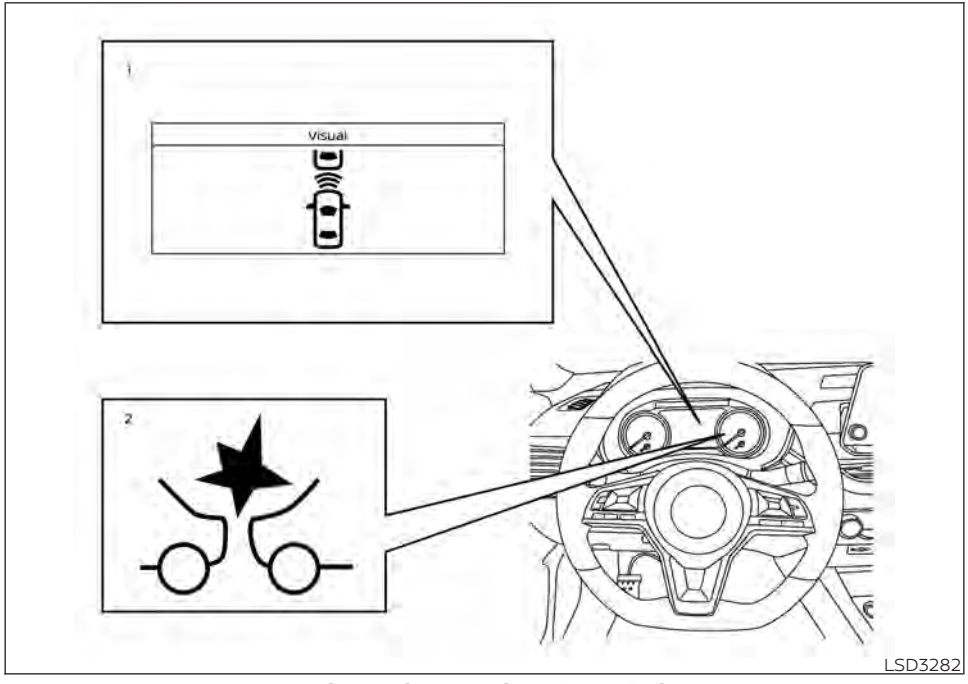

For vehicles with the 7 inch (18 cm) display

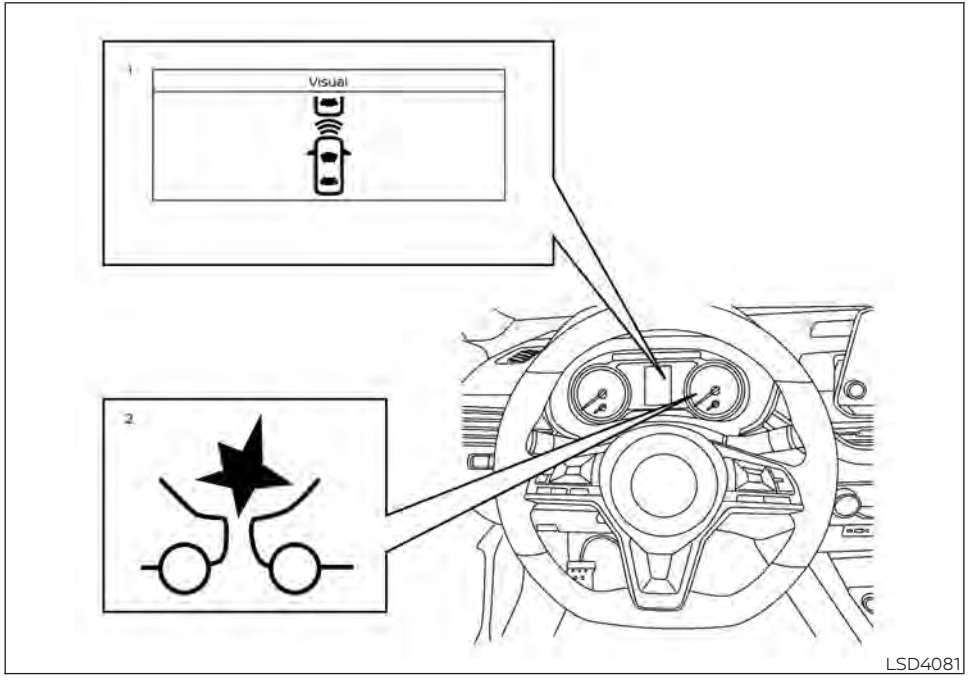

For vehicles with the 5 inch (13 cm) display

1. Vehicle ahead detection indicator
2. AEB with Pedestrian Detection system warning light

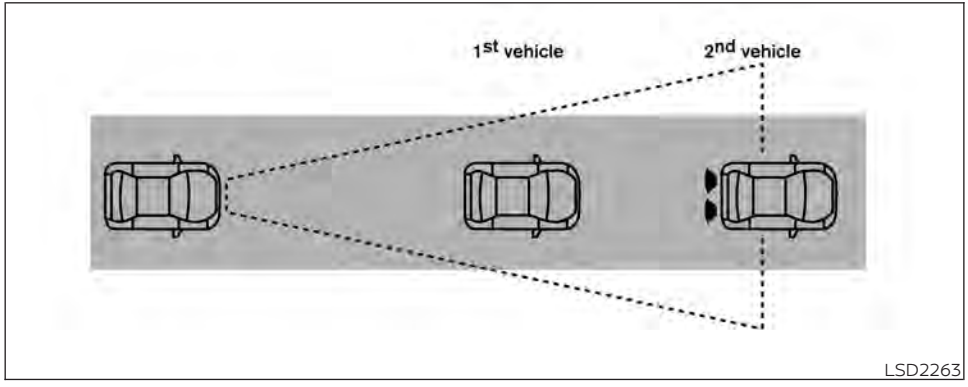

I-FCW SYSTEM OPERATION

The I-FCW system operates at speeds above approximately 3 mph (5 km/h).

If there is a potential risk of a forward collision, the I-FCW system will warn the driver by blinking the vehicle ahead detection indicator, and sounding an audible alert.

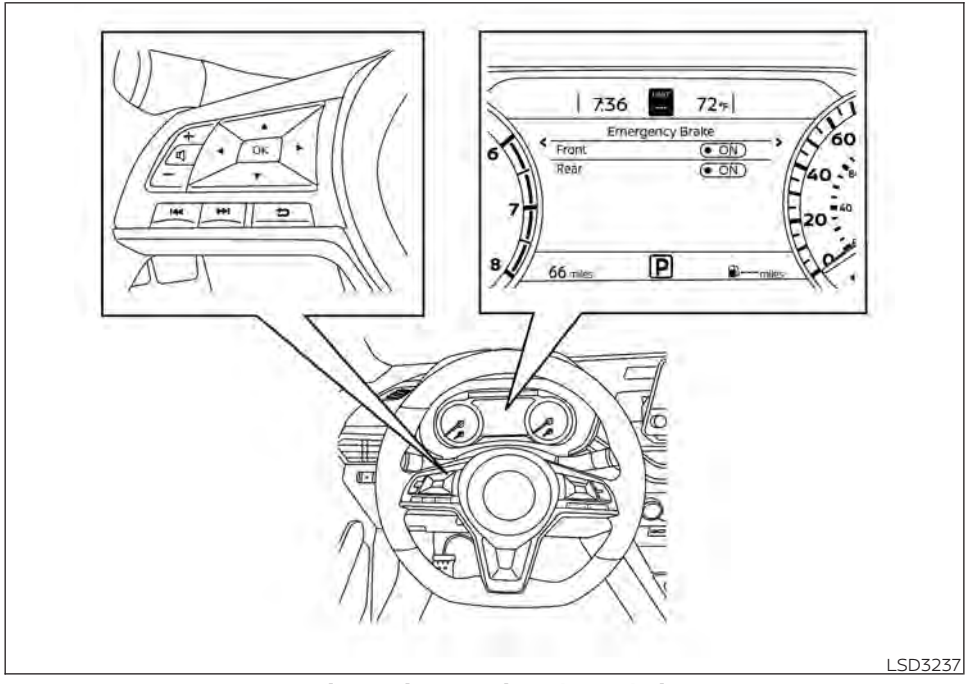

For vehicles with the 7 inch (18 cm) display

TURNING THE I-FCW SYSTEM ON/OFF

Perform the following steps to turn the I-FCW system ON or OFF.

For vehicles with the 7 inch (18 cm) display.

1. Press the ◀▶ button until "Settings" displays in the vehicle information display. Use the ▲▼ button to select "Driver Assistance." Then press the OK button.
2. Select "Emergency Brake" and press the OK button.
3. Select "Front" and press the OK button to turn the system on or off.

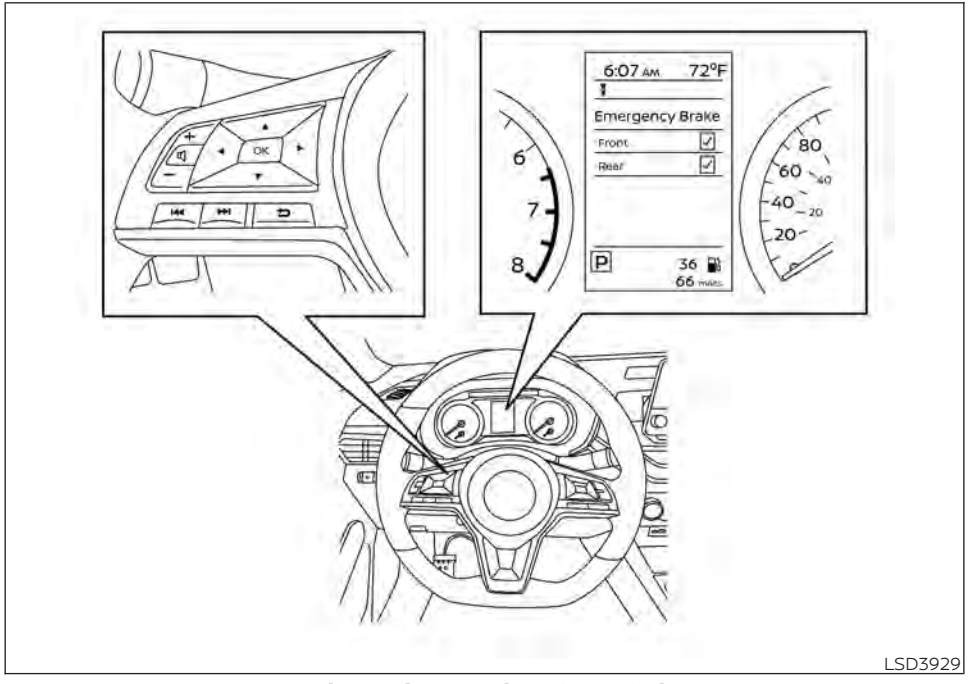

For vehicles with the 5 inch (13 cm) display

For vehicles with the 5 inch (13 cm) display.

1. Press the ◀▶ button until "Settings" displays in the vehicle information display. Use the ▲▼ button to select "Driver Assistance." Then press the OK button.
2. Select "Driving Aids" and press the OK button.
3. Select "Emergency Brake" and press the OK button.
4. Select "Front" and press the OK button to turn the system on or off.

When the I-FCW system is turned off, the AEB with Pedestrian Detection system warning light illuminates.

NOTE:

- **The I-FCW system will be automatically turned on when the engine is restarted.**
- **The I-FCW system is integrated into the AEB with Pedestrian Detection system. There is not a separate selection in the vehicle information display for the I-FCW system. When the AEB with Pedestrian Detection is turned off, the I-FCW system is also turned off.**

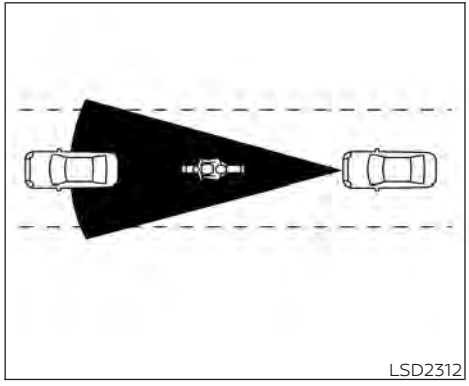

Illustration A

I-FCW SYSTEM LIMITATIONS

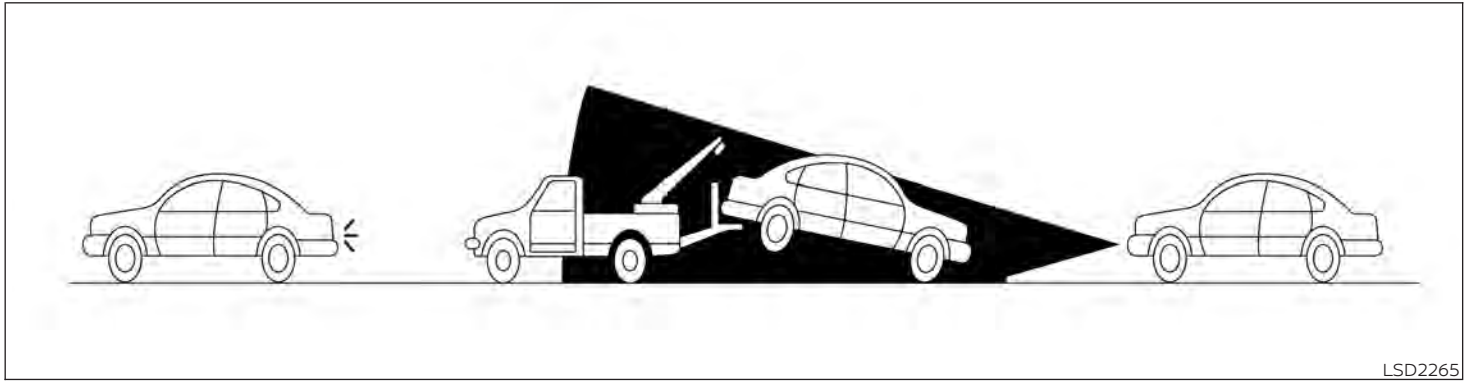

Illustration B

⚠ WARNING

Listed below are the system limitations for the I-FCW system. Failure to operate the vehicle in accordance with these system limitations could result in serious injury or death.

- **The I-FCW system cannot detect all vehicles under all conditions.**
- **The radar sensor does not detect the following objects:**
  - **Pedestrians, animals or obstacles in the roadway**
  - **Oncoming vehicles**
  - **Crossing vehicles**
- **(Illustration A) The I-FCW system does not function when a vehicle ahead is a narrow vehicle, such as a motorcycle.**
- **The radar sensor may not detect a vehicle ahead in the following conditions:**
  - **Snow or heavy rain**
  - **Dirt, ice, snow or other material covering the radar sensor.**
  - **Interference by other radar sources.**
  - **Snow or road spray from traveling vehicles.**
  - **Driving in a tunnel**
  - **(Illustration B) When the vehicle ahead is being towed.**

- **(Illustration C) When the distance to the vehicle ahead is too close, the beam of the radar sensor is obstructed.**
- **(Illustration D) When driving on a steep downhill slope or roads with sharp curves.**

- **The system is designed to automatically check the sensor's functionality, within certain limitations. The system may not detect some forms of obstruction of the sensor area such as ice, snow, stickers, etc. In these cases, the system may not be able to warn the driver properly. Be sure that you check, clean and clear the sensor area regularly.**
- **Excessive noise will interfere with the warning chime sound, and the chime may not be heard.**

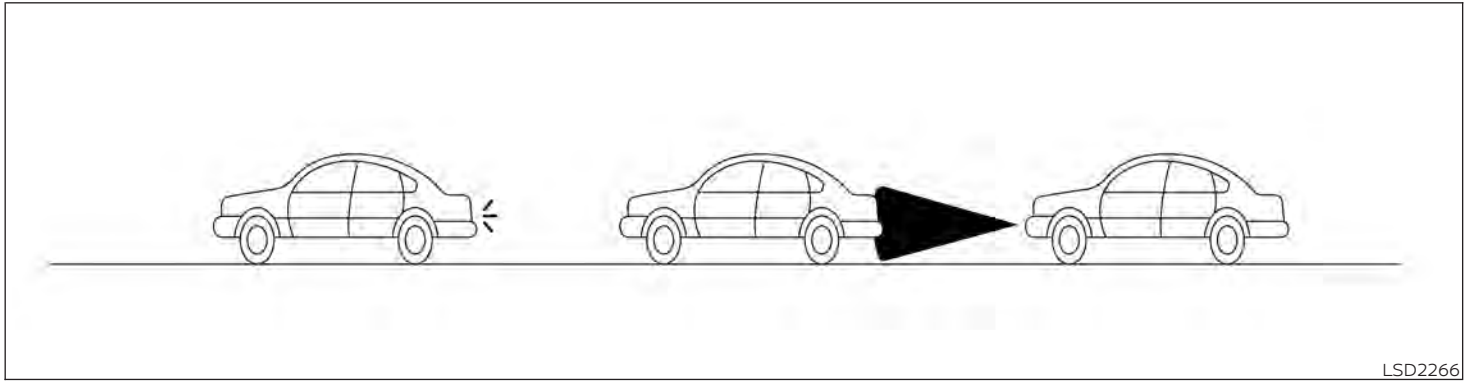

Illustration C

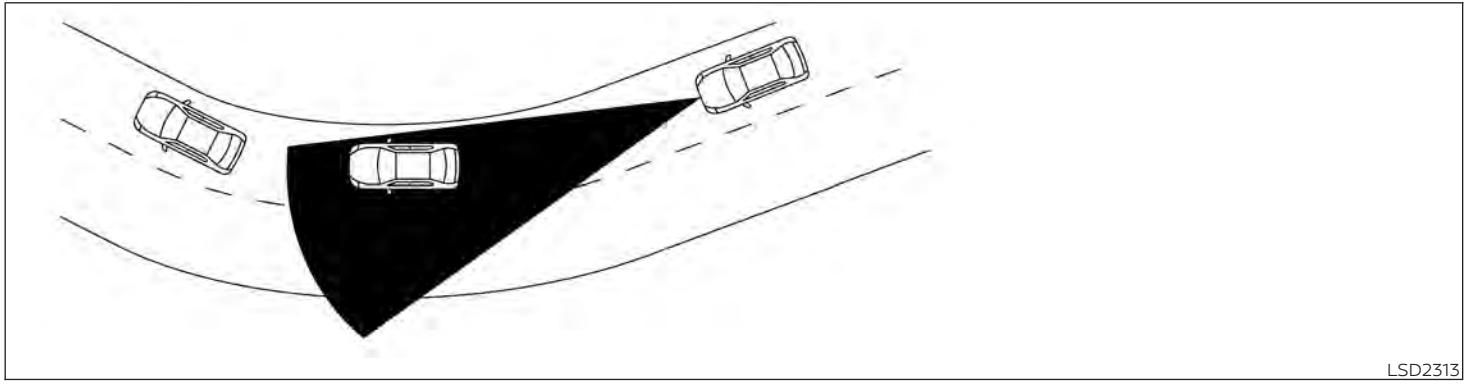

Illustration D

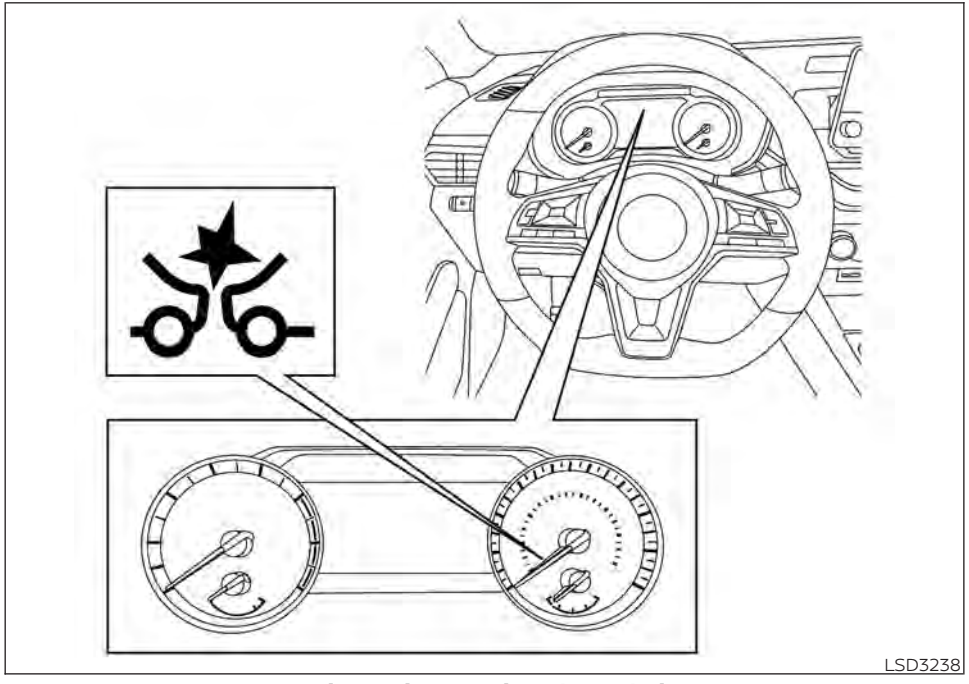

For vehicles with the 7 inch (18 cm) display

SYSTEM TEMPORARILY UNAVAILABLE

Condition A

When the radar sensor picks up interference from another radar source, making it impossible to detect a vehicle ahead, the I-FCW system is automatically turned off.

The AEB with Pedestrian Detection system warning light (orange) will illuminate.

Action to take

When the above conditions no longer exist, the I-FCW system will resume automatically.

Condition B

When there is inclement weather (rain, fog, snow, etc.) blocking the front radar sensor, the I-FCW system will automatically be canceled, the chime will sound and the "Forward Driving Aids temporarily disabled Front Sensor blocked See Owner's Manual" warning message will appear in the vehicle information display.

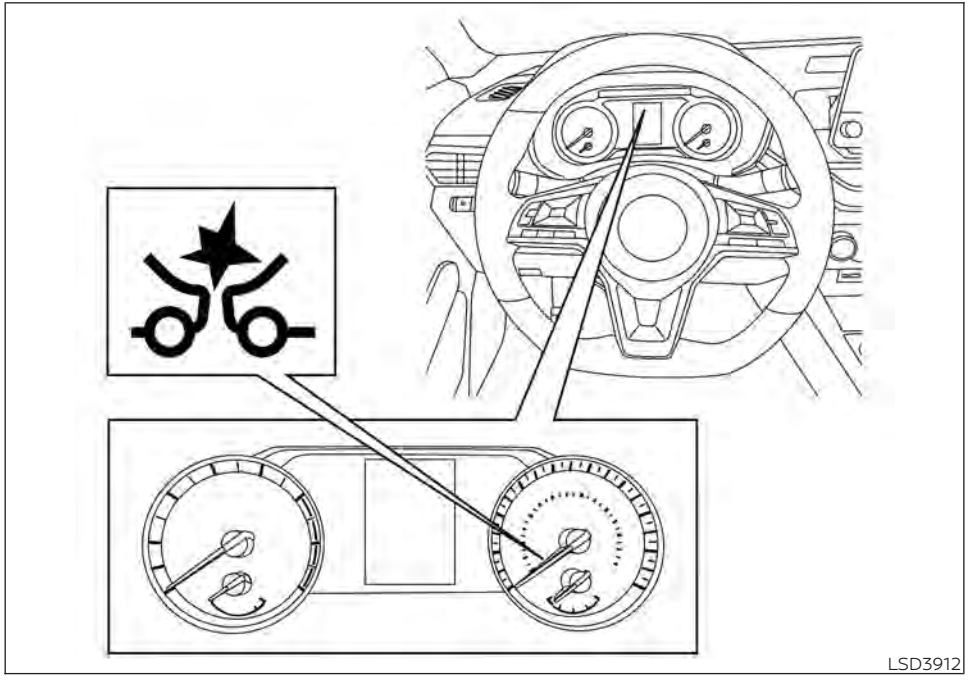

For vehicles with the 5 inch (13 cm) display

Action to take:

When the conditions listed above are no longer present, the warning message will no longer be available in the vehicle information display. If the "Forward Driving Aids temporarily disabled Front Sensor blocked See Owner's Manual" warning message continues to be displayed, have the system checked. It is recommended that you visit a NISSAN dealer for this service.

Condition C

When the radar sensor of the front bumper is covered with dirt or is obstructed, the I-FCW system will automatically be canceled. The chime will sound and the "Forward Driving Aids temporarily disabled Front Sensor blocked See Owner's Manual" warning message will appear in the vehicle information display.

Action to take:

If the warning message appears, stop the vehicle in a safe place, place the shift lever in the P (Park) position, and turn the engine off. When the radar signal is temporarily interrupted, clean the sensor area of the front bumper and restart the engine. If the "Forward Driving Aids temporarily disabled Front Sensor blocked See Owner's Manual" warning message continues to be displayed, have the system checked. It is recommended that you visit a NISSAN dealer for this service.

Condition D

When driving on roads with limited road structures or buildings (for example, long bridges, deserts, snowfields, driving next to long walls), the system may illuminate the system warning light and display the "Forward Driving Aids temporarily disabled Front Sensor blocked See Owner's Manual" warning message.

Action to take:

When the above driving conditions no longer exist, turn the system back on.

NOTE:

If the AEB with Pedestrian Detection system stops working, the I-FCW system will also stop working.

SYSTEM MALFUNCTION

If the I-FCW system malfunctions, it will be turned off automatically, a chime will sound, the AEB with Pedestrian Detection system warning light (orange) will illuminate and the warning message [Malfunction] will appear in the vehicle information display.

Action to take

If the warning light (orange) comes on, stop the vehicle in a safe location, turn the engine off and restart the engine. If the warning light continues to illuminate, have the I-FCW system checked. It is recommended that you visit a NISSAN dealer for this service.

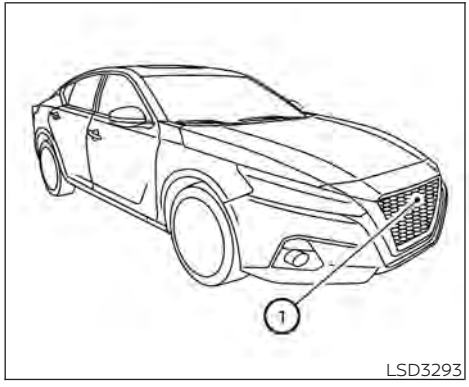

SYSTEM MAINTENANCE

The sensor ① is located on the front of the vehicle.

To keep the system operating properly, be sure to observe the following:

- Always keep the sensor area of the front bumper clean.
- Do not strike or damage the areas around the sensor.
- Do not cover or attach stickers or similar objects on the front bumper near the sensor area. This could cause failure or malfunction.
- Do not attach metallic objects near the sensor area (brush guard, etc.). This could cause failure or malfunction.
- Do not alter, remove or paint the front bumper. Before customizing or restoring the front bumper, it is recommended that you visit a NISSAN dealer.

FCC Notice

For USA

This device complies with Part 15 of the FCC Rules. Operation is subject to the following two conditions:

1. **This device may not cause harmful interference, and**
2. **This device must accept any interference received, including interference that may cause undesired operation.**

FCC Warning

Changes or modifications not expressly approved by the party responsible for compliance could void the user's authority to operate the equipment.

For Canada

This device complies with Industry Canada licence-exempt RSS standard(s). Operation is subject to the following two conditions:

1. **This device may not cause interference,**
2. **This device must accept any interference, including interference that may cause undesired operation of the device.**

INTELLIGENT DRIVER ALERTNESS (I-DA)

⚠ WARNING

Failure to follow the warnings and instructions for proper use of the I-DA system could result in serious injury or death.

- **The I-DA system is only a warning to inform the driver of a potential lack of driver attention or drowsiness. It will not steer the vehicle or prevent loss of control.**
- **The I-DA system does not detect and provide an alert of the driver's lack of attention or fatigue in every situation.**
- **It is the driver's responsibility to:**
  - **stay alert,**
  - **drive safely,**
  - **keep the vehicle in the traveling lane,**
  - **be in control of the vehicle at all times,**
  - **avoid driving when tired,**
  - **avoid distractions (texting, etc.).**

The I-DA system helps alert the driver if the system detects a lack of attention or driving fatigue.

The system monitors driving style and steering behavior over a period of time, and it detects changes from the normal pattern. If the system detects that driver attention is decreasing over a period of time, the system uses audible and visual warnings to suggest that the driver take a break.

For vehicles with the 7 inch (18 cm) display

INTELLIGENT DRIVER ALERTNESS SYSTEM OPERATION

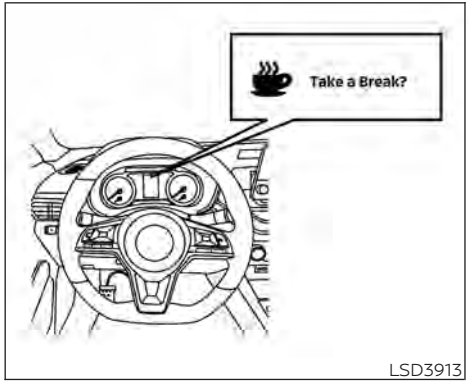

For vehicles with the 5 inch (13 cm) display

If the system detects driver fatigue or that driver attention is decreasing, the message "Take a break?" appears in the vehicle information display and a chime sounds when the vehicle is driven at speeds above 37 mph (60 km/h).

The system continuously monitors driver attention and can provide multiple warnings per trip.

The system resets and starts reassessing driving style and steering behavior when the ignition switch is cycled from the ON to the OFF position and back to the ON position.

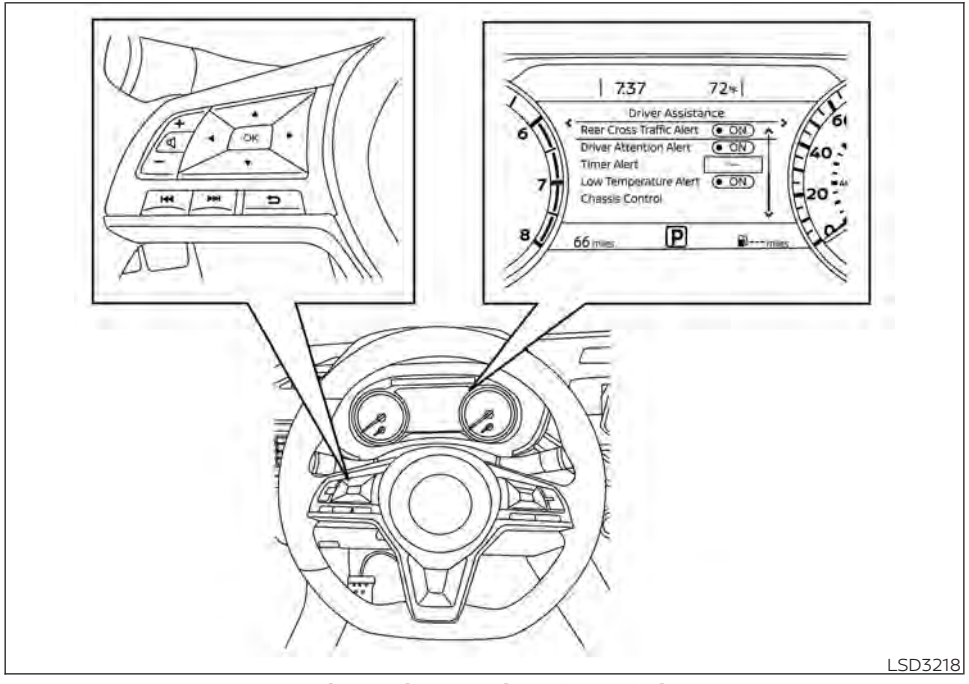

For vehicles with the 7 inch (18 cm) display

HOW TO ENABLE/DISABLE THE INTELLIGENT DRIVER ALERTNESS (I-DA) SYSTEM

Perform the following steps to enable or disable the I-DA system.

1. Press the ◀▶ button until "Settings" displays in the vehicle information display. Use the ▲▼ button to select "Driver Assistance." Then press the OK button.
2. Select "Driver Attention Alert" or " Driver Attention" and press the OK button to turn the system on or off.

NOTE:
The setting will be retained even if the engine is restarted.

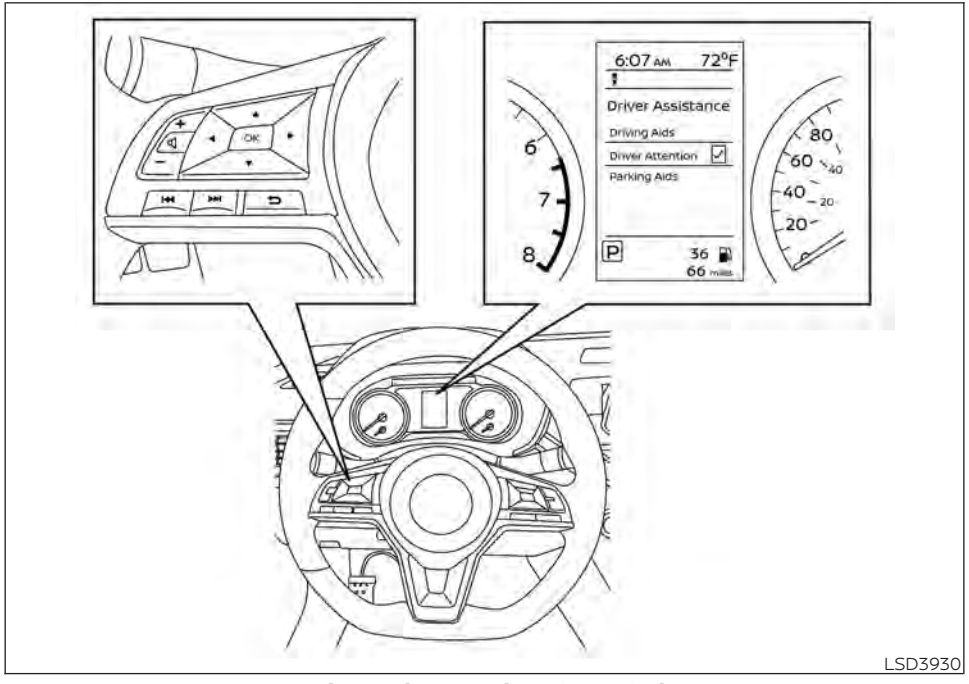

For vehicles with the 5 inch (13 cm) display

INTELLIGENT DRIVER ALERTNESS (I-DA) SYSTEM LIMITATIONS

⚠WARNING

Listed below are the system limitations for the I-DA system. Failure to operate the vehicle in accordance with these system limitations could result in serious injury or death.

- **The I-DA system may not operate properly and may not provide an alert in the following conditions:**
  - **Poor road conditions such as an uneven road surface or pot holes.**
  - **Strong side wind.**
  - **If you have adopted a sporty driving style with higher cornering speeds or higher rates of acceleration.**
  - **Frequent lane changes or changes to vehicle speed.**
- **The I-DA system will not provide an alert in the following conditions:**
  - **Vehicle speeds lower than 37 mph (60 km/h).**
  - **Short lapses of attention.**
  - **Instantaneous distractions such as dropping an object.**

For vehicles with the 7 inch (18 cm) display

For vehicles with the 5 inch (13 cm) display

System malfunction

If the Intelligent Driver Alertness system malfunctions, the system warning message will appear in the vehicle information display and the function will be stopped automatically.

Action to take

Stop the vehicle in a safe location, place the vehicle in P (Park) position, turn the engine off and restart the engine. If the system warning message continues to appear, have the system checked. It is recommended that you visit a NISSAN dealer for this service.

BREAK-IN SCHEDULE

⚠ CAUTION

During the first 1,200 miles (2,000 km), follow these recommendations to obtain maximum engine performance and ensure the future reliability and economy of your new vehicle. Failure to follow these recommendations may result in shortened engine life and reduced engine performance.

- Avoid driving for long periods at constant speed, either fast or slow, and do not run the engine over 4,000 rpm.
- Do not accelerate at full throttle in any gear.
- Avoid quick starts.
- Avoid hard braking as much as possible.

FUEL EFFICIENT DRIVING TIPS

Follow these easy-to-use Fuel Efficient Driving Tips to help you achieve the most fuel economy from your vehicle.

1. **Use Smooth Accelerator and Brake Pedal Application**
   - Avoid rapid starts and stops.
   - Use smooth, gentle accelerator and brake application whenever possible.
   - Maintain constant speed while commuting and coast whenever possible.
2. **Maintain Constant Speed**
   - Look ahead to try and anticipate and minimize stops.
   - Synchronizing your speed with traffic lights allows you to reduce your number of stops.
   - Maintaining a steady speed can minimize red light stops and improve fuel efficiency.
3. **Use Air Conditioning (A/C) at Higher Vehicle Speeds**
   - Below 40 mph (64 km/h), it is more efficient to open windows to cool the vehicle due to reduced engine load.
   - Above 40 mph (64 km/h), it is more efficient to use A/C to cool the vehicle due to increased aerodynamic drag.
   - Recirculating the cool air in the cabin when the A/C is on reduces cooling load.
4. **Drive at Economical Speeds and Distances**
   - Observing the speed limit and not exceeding 60 mph (97 km/h) (where legally allowed) can improve fuel efficiency due to reduced aerodynamic drag.
   - Maintaining a safe following distance behind other vehicles reduces unnecessary braking.
   - Safely monitoring traffic to anticipate changes in speed permits reduced braking and smooth acceleration changes.
   - Select a gear range suitable to road conditions.
5. **Use Cruise Control**
   - Using cruise control during highway driving helps maintain a steady speed.
   - Cruise control is particularly effective in providing fuel savings when driving on flat terrains.
6. **Plan for the Shortest Route**
   - Utilize a map or navigation system to determine the best route to save time.

7. **Avoid Idling**
   - Shutting off your engine when safe for stops exceeding 30–60 seconds saves fuel and reduces emissions.
8. **Buy an Automated Pass for Toll Roads**
   - Automated passes permit drivers to use special lanes to maintain cruising speed through the toll and avoid stopping and starting.
9. **Winter Warm Up**
   - Limit idling time to minimize impact to fuel economy.
   - Vehicles typically need no more than 30 seconds of idling at start-up to effectively circulate the engine oil before driving.
   - Your vehicle will reach its ideal operating temperature more quickly while driving versus idling.
10. **Keeping your Vehicle Cool**
   - Park your vehicle in a covered parking area or in the shade whenever possible.
   - When entering a hot vehicle, opening the windows will help to reduce the inside temperature faster, resulting in reduced demand on your A/C system.

INCREASING FUEL ECONOMY

- Keep your engine tuned up.
- Follow the recommended scheduled maintenance.
- Keep the tires inflated to the correct pressure. Low tire pressure increases tire wear and lowers fuel economy.
- Keep the wheels in correct alignment. Improper alignment increases tire wear and lowers fuel economy.
- Use the recommended viscosity engine oil. For additional information, see "Engine oil and oil filter recommendations" (P. 10-7).

ALL-WHEEL DRIVE (AWD) (if so equipped)

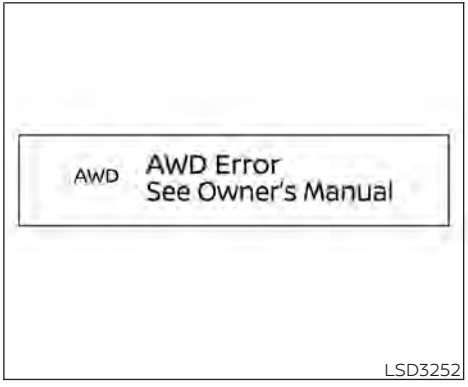

If any malfunction occurs in the AWD system while the engine is running, messages are displayed in the meter.

If the AWD error warning message is displayed, there may be a malfunction in the AWD system. Reduce vehicle speed and have your vehicle checked. It is recommended that you visit a NISSAN dealer as soon as possible.

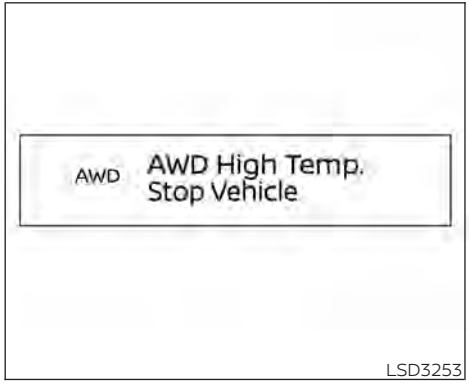

The AWD high temperature message may be displayed while trying to free a stuck vehicle due to increased oil temperature. The driving mode may change to 2-wheel drive. If this message is displayed, stop the vehicle with the engine idling, as soon as it is safe to do so. Then if the message turns off, you can continue driving.

The tire size message may be displayed if there is a large difference between the diameters of front and rear wheels. Pull off the road in a safe area, with the engine idling. Check that all tire sizes are the same, that the tire pressure is correct and that the tires are not excessively worn.

If any warning messages continue to be displayed, have your vehicle checked. It is recommended that you visit a NISSAN dealer as soon as possible.

⚠ WARNING

- **Do not drive beyond the performance capability of the tires. Accelerating quickly, sharp steering maneuvers or sudden braking may cause loss of control, even with AWD engaged.**
- **For AWD equipped vehicles, do not attempt to raise two wheels off the ground and shift the transmission to any drive or reverse position with the engine running. Doing so may result in drivetrain damage or unexpected vehicle movement which could result in serious personal injury or vehicle damage.**

- **Do not attempt to test an AWD equipped vehicle on a 2-wheel dynamometer (such as the dynamometers used by some states for emissions testing) or similar equipment even if the other two wheels are raised off the ground. Make sure that you inform the test facility personnel that your vehicle is equipped with AWD before it is placed on a dynamometer. Using the wrong test equipment may result in drivetrain damage or unexpected vehicle movement which could result in serious personal injury or vehicle damage.**

⚠ CAUTION

- **Do not operate the engine on a free roller when any of the wheels are raised.**
- **If you use the free roller, rotate four wheels with the same speed without raising any wheels.**

- **If an AWD warning message is displayed while driving there may be a malfunction in the AWD system. Reduce the vehicle speed immediately and have your vehicle checked. It is recommended that you visit a NISSAN dealer as soon as possible.**
- **The powertrain may be damaged if you continue driving when the AWD temperature or tire size incorrect messages are displayed**
- **If the AWD high temperature message is displayed while you are driving, pull off the road in a safe area, and idle the engine. The driving mode will change to 2WD to prevent the AWD system from malfunctioning. If the warning message turns off, you can drive again.**
- **If the tire size incorrect message is displayed while you are driving, pull off the road in a safe area with the engine idling. Check that all tire sizes are the same, that the tire pressure is correct and that the tires are not excessively worn.**

- **If a warning message continues to be displayed after the above operations, have your vehicle checked as soon as possible. It is recommended that you visit a NISSAN dealer for this service.**

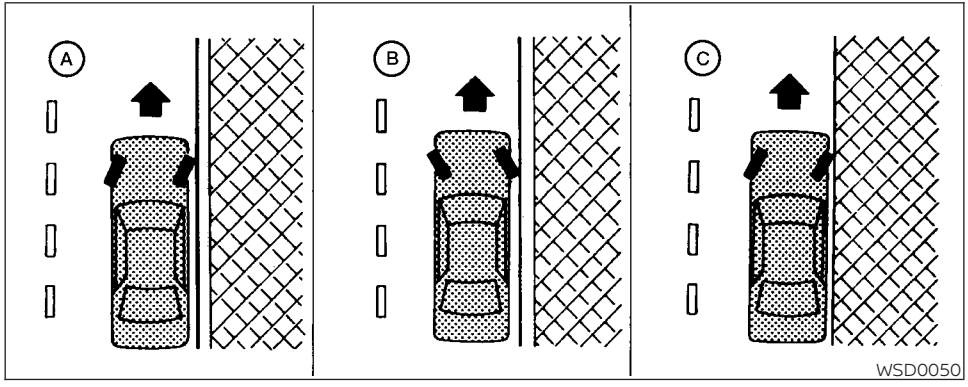

⚠ WARNING

- **Do not stop or park the vehicle over flammable materials such as dry grass, waste paper or rags. They may ignite and cause a fire.**

- **Safe parking procedures require that both the parking brake be set and the transmission placed into P (Park). Failure to do so could cause the vehicle to move unexpectedly or roll away and result in an accident. Make sure the shift lever has been pushed as far forward as it can go and cannot be moved without depressing the foot brake pedal.**
- **Never leave the engine running while the vehicle is unattended.**

- **Do not leave children unattended inside the vehicle. They could unknowingly activate switches or controls or make the vehicle move. Unattended children could become involved in serious accidents.**
- **To help avoid risk of injury or death through unintended operation of the vehicle and/or its systems, do not leave children, people who require the assistance of others or pets unattended in your vehicle. Additionally, the temperature inside a closed vehicle on a warm day can quickly become high enough to cause a significant risk of injury or death to people and pets.**

1. Firmly apply the parking brake.
2. Move the shift lever to the P (Park) position.
3. To help prevent the vehicle from rolling into traffic when parked on an incline, it is a good practice to turn the wheels as illustrated.
   - **HEADED DOWNHILL WITH CURB Ⓐ:**
     Turn the wheels into the curb and move the vehicle forward until the curb side wheel gently touches the curb.

- **HEADED UPHILL WITH CURB Ⓑ:**
  Turn the wheels away from the curb and move the vehicle back until the curb side wheel gently touches the curb.
- **HEADED UPHILL OR DOWNHILL, NO CURB Ⓒ:**
  Turn the wheels toward the side of the road so the vehicle will move away from the center of the road if it moves.

4. Place the ignition switch in the LOCK position.

⚠WARNING

- **If the engine is not running or is turned off while driving, the power assist for the steering will not work. Steering will be harder to operate.**
- **When the power steering warning light illuminates with the engine running, there will be no power assist for the steering. You will still have control of the vehicle, but the steering will be much harder to operate. Have the power steering system checked. It is recommended that you visit a NISSAN dealer for this service.**

The power steering system is designed to provide power assistance while driving to operate the steering wheel with light force.

When the steering wheel is operated repeatedly or continuously while parking or driving at a very low speed, the power assist for the steering wheel will be reduced. This is to prevent overheating of the power steering system and protect it from getting damaged. While the power assist is reduced, steering wheel operation will become heavy. If the steering wheel operation is still performed, the power steering may stop and the power steering warning light will illuminate. In a safe location, stop the engine and place the ignition switch in the OFF position. The temperature of the power steering system will go down after a period of time and the power assist level will return to normal after starting the engine. The power steering warning light will go off. Avoid repeating such steering wheel operations that could cause the power steering system to overheat.

You may hear a noise from the front of the vehicle when the steering wheel is operated. This is a normal operational noise and is not a malfunction.

If the power steering warning light illuminates while the engine is running, it may indicate the power steering system is not functioning properly and may need servicing. Have the power steering system checked. It is recommended that you visit a NISSAN dealer for this service.

When the power steering warning light illuminates with the engine running, the power assist for the steering will cease operation but you will still have control of the vehicle. At this time, greater steering efforts are required to operate the steering wheel, especially in sharp turns and at low speeds.

The brake system has two separate hydraulic circuits. If one circuit malfunctions, you will still have braking at two wheels.

BRAKE PRECAUTIONS

Vacuum assisted brakes

The brake booster aids braking by using engine vacuum. If the engine stops, you can stop the vehicle by depressing the brake pedal. However, greater foot pressure on the brake pedal will be required to stop the vehicle and stopping distance will be longer.

Using the brakes

Avoid resting your foot on the brake pedal while driving. This will overheat the brakes, wear out the brake pads faster, and reduce gas mileage.

To help reduce brake wear and to prevent the brakes from overheating, reduce speed and downshift to a lower gear before going down a slope or long grade. Overheated brakes may reduce braking performance and could result in loss of vehicle control.

⚠WARNING

- **While driving on a slippery surface, be careful when braking, accelerating or downshifting. Abrupt braking or accelerating could cause the wheels to skid and result in an accident.**
- **If the engine is not running or is turned off while driving, the power assist for the brakes will not work. Braking will be harder.**

Wet brakes

When the vehicle is washed or driven through water, the brakes may get wet. As a result, your braking distance will be longer and the vehicle may pull to one side during braking.

To dry the brakes, drive the vehicle at a safe speed while lightly pressing the brake pedal to heat up the brakes. Do this until the brakes return to normal. Avoid driving the vehicle at high speeds until the brakes function correctly.

Parking brake break-in

Break in the parking brake shoes whenever the stopping effect of the parking brake is weakened or whenever the parking brake shoes and/or drums/rotors are replaced, in order to assure the best braking performance.

This procedure is described in the vehicle service manual. It is recommended that you visit a NISSAN dealer for this service.

ANTI-LOCK BRAKING SYSTEM (ABS)

⚠WARNING

- **The ABS is a sophisticated device, but it cannot prevent accidents resulting from careless or dangerous driving techniques. It can help maintain vehicle control during braking on slippery surfaces. Remember that stopping distances on slippery surfaces will be longer than on normal surfaces even with ABS. Stopping distances may also be longer on rough, gravel or snow covered roads, or if you are using tire chains. Always maintain a safe distance from the vehicle in front of you. Ultimately, the driver is responsible for safety.**

- **Tire type and condition may also affect braking effectiveness.**
  - **When replacing tires, install the specified size of tires on all four wheels.**
  - **When installing a spare tire, make sure that it is the proper size and type as specified on the Tire and Loading Information label. For additional information, see "Tire and Loading Information label" (P. 10-14).**
  - **For additional information, see "Wheels and tires" (P. 8-29).**

The ABS controls the brakes so the wheels do not lock during hard braking or when braking on slippery surfaces. The system detects the rotation speed at each wheel and varies the brake fluid pressure to prevent each wheel from locking and sliding. By preventing each wheel from locking, the system helps the driver maintain steering control and helps to minimize swerving and spinning on slippery surfaces.

Using the system

Depress the brake pedal and hold it down. Depress the brake pedal with firm steady pressure, but do not pump the brakes. The Anti-lock Braking System will operate to prevent the wheels from locking up. Steer the vehicle to avoid obstacles.

⚠ WARNING

Do not pump the brake pedal. Doing so may result in increased stopping distances.

Self-test feature

The Anti-lock Braking System (ABS) includes electronic sensors, electric pumps, hydraulic solenoids and a computer. The computer has a built-in diagnostic feature that tests the system each time you start the engine and move the vehicle at a low speed in forward or reverse. When the self-test occurs, you may hear a "clunk" noise and/or feel a pulsation in the brake pedal. This is normal and does not indicate a malfunction. If the computer senses a malfunction, it switches the ABS off and illuminates the ABS warning light on the instrument panel. The brake system then operates normally but without anti-lock assistance.

If the ABS warning light illuminates during the self-test or while driving, have the vehicle checked. It is recommended that you visit a NISSAN dealer for this service.

Normal operation

The Anti-lock Braking System (ABS) operates at speeds above 3 - 6 mph (5 - 10 km/h). The speed varies according to road conditions.

When the ABS senses that one or more wheels are close to locking up, the actuator rapidly applies and releases hydraulic pressure. This action is similar to pumping the brakes very quickly. You may feel a pulsation in the brake pedal and hear a noise from under the hood or feel a vibration from the actuator when it is operating. This is normal and indicates that the ABS is operating properly. However, the pulsation may indicate that road conditions are hazardous and extra care is required while driving.

BRAKE ASSIST

When the force applied to the brake pedal exceeds a certain level, the Brake Assist is activated generating greater braking force than a conventional brake booster even with light pedal force.

⚠ WARNING

The Brake Assist is only an aid to assist braking operation and is not a collision warning or avoidance device. It is the driver's responsibility to stay alert, drive safely and be in control of the vehicle at all times.

The VDC system uses various sensors to monitor driver inputs and vehicle motion. Under certain driving conditions, the VDC system helps to perform the following functions:

- Controls brake pressure to reduce wheel slip on one slipping drive wheel so power is transferred to a non-slipping drive wheel on the same axle.
- Controls brake pressure and engine output to reduce drive wheel slip based on vehicle speed (traction control function).
- Controls brake pressure at individual wheels and engine output to help the driver maintain control of the vehicle in the following conditions:
  - Understeer (vehicle tends to not follow the steered path despite increased steering input)
  - Oversteer (vehicle tends to spin due to certain road or driving conditions)

The VDC system can help the driver to maintain control of the vehicle, but it cannot prevent loss of vehicle control in all driving situations.

When the VDC system operates, the indicator light in the instrument panel flashes to note the following:

- The road may be slippery or the system may determine some action is required to help keep the vehicle on the steered path.
- You may feel a pulsation in the brake pedal and hear a noise or vibration from under the hood. This is normal and indicates that the VDC system is working properly.
- Adjust your speed and driving to the road conditions.

For additional information, see "Slip indicator light" (P. 2-16) and "Vehicle Dynamic Control (VDC) OFF indicator light" (P. 2-17).

If a malfunction occurs in the system, the indicator light comes on in the instrument panel. The VDC system automatically turns off when the indicator light is on.

The vehicle information display is used to turn off the VDC system. When the VDC system is turned off, the OFF indicator light and if so equipped, the RAB system warning light, AEB system warning light and AEB with Pedestrian Detection system warning light illuminate to indicate the VDC, AEB, AEB with Pedestrian Detection, and RAB systems are off.

When the VDC system is turned off in the vehicle information display, the VDC system still operates to prevent one drive wheel from slipping by transferring power to a non-slipping drive wheel. The indicator light flashes if this occurs. All other VDC functions are off and the indicator light will not flash.

The VDC system is automatically reset to ON when the ignition switch is placed in the OFF position then back to the ON position.

The computer has a built-in diagnostic feature that tests the system each time you start the engine and move the vehicle forward or in reverse at a slow speed. When the self-test occurs, you may hear a clunk noise and/or feel a pulsation in the brake pedal. This is normal and is not an indication of a malfunction.

WARNING

- **The VDC system is designed to help the driver maintain stability but does not prevent accidents due to abrupt steering operation at high speeds or by careless or dangerous driving techniques. Reduce vehicle speed and be especially careful when driving and cornering on slippery surfaces and always drive carefully.**
- **Do not modify the vehicle's suspension. If suspension parts such as shock absorbers, struts, springs, stabilizer bars, bushings and wheels are not NISSAN recommended for your vehicle or are extremely deteriorated, the VDC system may not operate properly. This could adversely affect vehicle handling performance, and the indicator light may flash or the OFF indicator light may illuminate.**
- **If brake related parts such as brake pads, rotors and calipers are not NISSAN recommended or are extremely deteriorated, the VDC system may not operate properly and both the and OFF indicator lights may illuminate.**
- **If engine control related parts are not NISSAN recommended or are extremely deteriorated, both the and the OFF indicator lights may illuminate.**
- **When driving on extremely inclined surfaces such as higher banked corners, the VDC system may not operate properly and the indicator light may flash or the OFF indicator light may illuminate. Do not drive on these types of roads.**
- **When driving on an unstable surface such as a turntable, ferry, elevator or ramp, the indicator light may flash or the OFF indicator light may illuminate. This is not a malfunction. Restart the engine after driving onto a stable surface.**
- **If wheels or tires other than the NISSAN recommended ones are used, the VDC system may not operate properly and the indicator light may flash or the OFF indicator light may illuminate.**
- **The VDC system is not a substitute for winter tires or tire chains on a snow covered road.**

BRAKE FORCE DISTRIBUTION

During braking while driving through turns, the system optimizes the distribution of force to each of the front and rear wheels depending on the radius of the turn.

⚠ WARNING

- **The VDC system is designed to help the driver maintain stability but does not prevent accidents due to abrupt steering operation at high speeds or by careless or dangerous driving techniques. Reduce vehicle speed and be especially careful when driving and cornering on slippery surfaces and always drive carefully.**
- **Do not modify the vehicle's suspension. If suspension parts such as shock absorbers, struts, springs, stabilizer bars, bushings and wheels are not NISSAN recommended for your vehicle or are extremely deteriorated, the VDC system may not operate properly. This could adversely affect vehicle handling performance, and the indicator light may flash or the indicator light may illuminate.**
- **If brake related parts such as brake pads, rotors and calipers are not NISSAN recommended or are extremely deteriorated, the VDC system may not operate properly and both the and indicator light may illuminate.**
- **If engine control related parts are not NISSAN recommended or are extremely deteriorated, both the and the indicator light may illuminate.**
- **When driving on extremely inclined surfaces such as higher banked corners, the VDC system may not operate properly and the indicator light may flash or the indicator light may illuminate. Do not drive on these types of roads.**
- **When driving on an unstable surface such as a turntable, ferry, elevator or ramp, the indicator light may flash or the indicator light may illuminate. This is not a malfunction. Restart the engine after driving onto a stable surface.**
- **If wheels or tires other than the NISSAN recommended ones are used, the VDC system may not operate properly and the indicator light may flash or the indicator light may illuminate.**
- **The VDC system is not a substitute for winter tires or tire chains on a snow covered road.**

The chassis control is an electric control module that includes the following functions:

- Intelligent Trace Control
- Active Ride Control

INTELLIGENT TRACE CONTROL (I-TC)

This system senses driving based on the driver's steering and acceleration/braking patterns, and controls brake pressure at individual wheels to aid tracing at corners and help smooth vehicle response.

The I-TC can be set to on (enabled) or off (disabled) through the vehicle information display "Settings" page. For additional information, see "Vehicle information display — 5 inch (13 cm) Type A (if so equipped)" (P. 2-18) or "Vehicle information display — 7 inch (18 cm) Type B (if so equipped)" (P. 2-34).

When the VDC system is turned off, the I-TC is also turned off.

⚠ WARNING

The I-TC may not be effective depending on the driving condition. Always drive carefully and attentively.

When the I-TC is operating, you may feel a pulsation in the brake pedal and hear a noise. This is normal and indicates that the I-TC is operating properly.

Even if the I-TC is turned off, some functions will remain on to assist the driver (for example, avoidance scenes).

ACTIVE RIDE CONTROL (ARC)

This system senses upper body motion (based on wheel speed information) and controls engine torque and four wheel brake pressure. This will enhance ride comfort in effort to restrain uncomfortable upper body movement when passing over undulated road surfaces. This system comes into effect above 25 mph (40 km/h).

When the VDC system is turned off, the ARC is also turned off.

When the ARC is operating, you may hear noise and sense slight deceleration. This is normal and indicates that the ARC is operating properly.

⚠ WARNING

- **Never rely solely on the hill start assist system to prevent the vehicle from moving backward on a hill. Always drive carefully and attentively. Depress the brake pedal when the vehicle is stopped on a steep hill. Be especially careful when stopped on a hill on frozen or muddy roads. Failure to prevent the vehicle from rolling backwards may result in a loss of control of the vehicle and possible serious injury or death.**
- **The hill start assist system is not designed to hold the vehicle at a standstill on a hill. Depress the brake pedal when the vehicle is stopped on a steep hill. Failure to do so may cause the vehicle to roll backwards and may result in a collision or serious personal injury.**
- **The hill start assist system may not prevent the vehicle from rolling backwards on a hill under all load or road conditions. Always be prepared to depress the brake pedal to prevent the vehicle from rolling backwards. Failure to do so may result in a collision or serious personal injury.**

When the vehicle is stopped on a hill, the hill start assist system automatically keeps the brakes applied to help prevent the vehicle from rolling backward in the time it takes the driver to release the brake pedal and apply the accelerator.

The hill start assist system will operate automatically under the following conditions:

- The transmission is shifted to a forward or reverse gear.
- The vehicle is stopped completely on a hill by applying the brake. The maximum holding time is 2 seconds. After 2 seconds the vehicle will begin to roll back and the hill start assist system will stop operating completely.

The hill start assist system will not operate when the shift lever is placed in the N (Neutral) or P (Park) position or on a flat and level road.

REAR SONAR SYSTEM (RSS) (if so equipped)

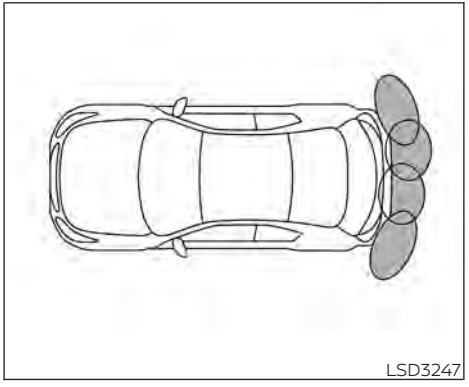

The RSS sounds a tone to inform the driver of obstacles near the bumper.

When the "DISPLAY" key is on, the sonar view will automatically appear in the touch-screen display. An additional view of the sonar status will appear in the vehicle information display for reference.

⚠ WARNING

- **The RSS is a convenience but it is not a substitute for proper parking.**
- **The driver is always responsible for safety during parking and other maneuvers. Always look around and check that it is safe to do so before parking.**
- **Read and understand the limitations of the RSS as contained in this section. The colors of the corner sonar indicator and the distance guide lines in the rear view indicate different distances to the object.**
- **Inclement weather or ultrasonic sources such as an automatic car wash, a truck's compressed-air brakes or a pneumatic drill may affect the function of the system; this may include reduced performance or a false activation.**
- **This function is designed as an aid to the driver in detecting large stationary objects to help avoid damaging the vehicle.**

- **The system is not designed to prevent contact with small or moving objects. Always move slowly. The system will not detect small objects below the bumper, and may not detect objects close to the bumper or on the ground.**
- **The system may not detect the following objects: fluffy objects such as snow, cloth, cotton, glass, wool, etc.; thin objects such as rope, wire and chain, etc.; or wedge-shaped objects.**
- **The rear sonar sensors may detect a sound wave reflected from the surface of an obstacle when a horn, etc. sounds or there is an ultrasonic source (such as parking sensors of other vehicles) around the vehicle because the rear sonar sensors detect the distance between the vehicle and the obstacle by detecting the sound wave reflected from the surface of an obstacle.**

If your vehicle sustains damage to the bumper fascia, leaving it misaligned or bent, the sensing zone may be altered causing inaccurate measurement of obstacles or false alarms.

⚠ CAUTION

- **Excessive noise (such as audio system volume or an open vehicle window) will interfere with the tone and it may not be heard.**
- **Keep the sonar sensors (located on the bumper fascia) free from snow, ice and large accumulations of dirt. Do not clean the sensors with sharp objects. If the sensors are covered, the accuracy of the sonar function will be diminished.**

SYSTEM OPERATION

The system informs with a visual and audible alert of rear obstacles when the shift lever is in the R (Reverse) position.

Sonar Operation Table

	RR Sensor	
Range	Sound	Display
R	o	o
o – Display/Beep when detect		
† – Display on camera view		
x – No Display and Beep		

The system is deactivated at speeds above 6 mph (10 km/h). It is reactivated at lower speeds.

The intermittent tone will stop after 3 seconds when an obstacle is detected by only the corner sensor and the distance does not change. The tone will stop when the obstacle gets away from the vehicle.

When the object is detected, the indicator (green) appears and blinks and the tone sounds intermittently. When the vehicle moves closer to the object, the color of the indicator turns yellow and the rate of the blinking increases. When the vehicle is very close to the object, the indicator stops blinking and turns red, and the tone sounds continuously.

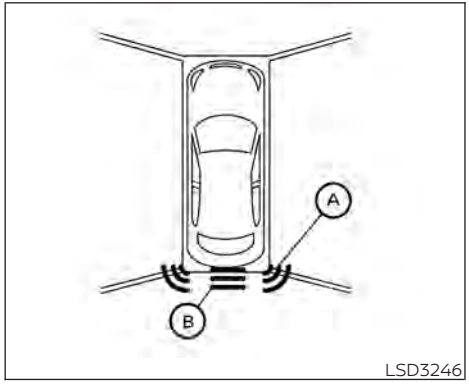

When the corner of the vehicle moves closer to an object, the corner sonar indicator Ⓐ appears. When the center of the vehicle moves close to an object, the center sonar indicator Ⓑ appears.

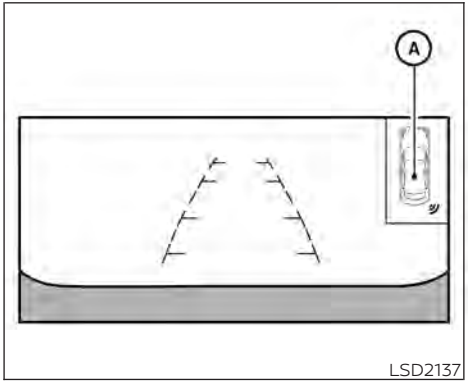

The system indicators Ⓐ will appear when the vehicle moves closer to an object.

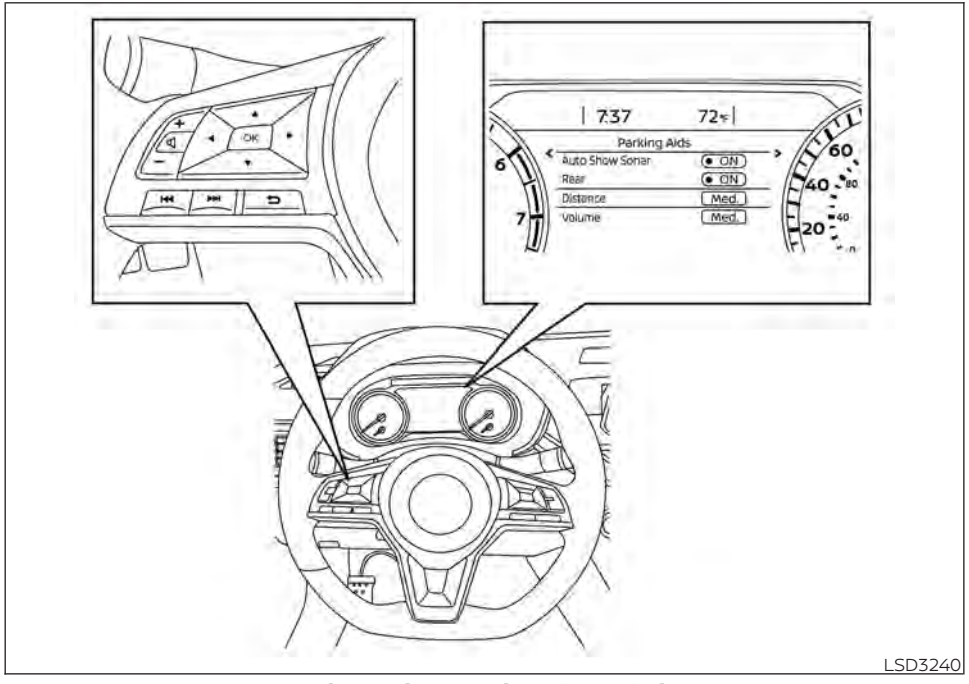

For vehicles with the 7 inch (18 cm) display

HOW TO ENABLE/DISABLE THE SONAR SYSTEM

The system is automatically activated when the ignition is in the ON position and the shift lever is in the R (Reverse) position.

Perform the following steps to enable or disable the sonar system:

For vehicles with 7 inch (18 cm) display.

1. Press the ◀▶ button until "Settings" displays in the vehicle information display. Use the ▲▼ button to select "Driver Assistance." Then press the OK button.
2. Select "Parking Aids" and press the OK button.
3. Select "Rear" and press the OK button to turn the system on or off.

- Select "Auto Show Sonar" to display the parking sensor in the vehicle information display when the sonar system activates.
- Select "Distance" to change the sonar system distance to "Long", "Medium" or "Short".
- Select "Volume" to change the sonar system volume to "High", "Medium" or "Low".

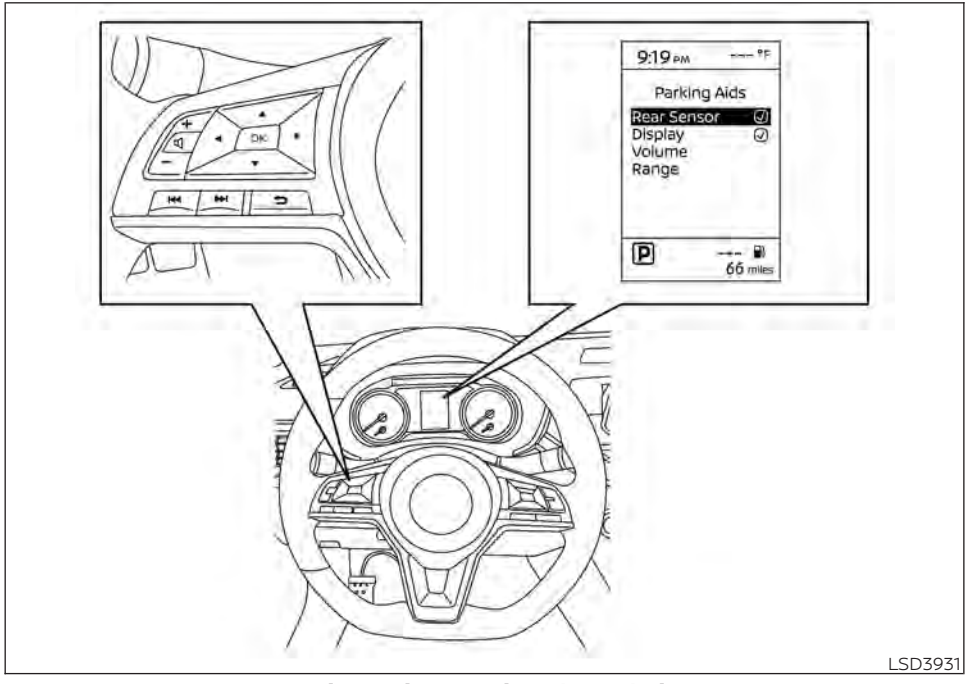

For vehicles with the 5 inch (13 cm) display

For vehicles with 5 inch (13 cm) display.

1. Press the ◀▶ button until "Settings" displays in the vehicle information display. Use the ▲▼ button to select "Driver Assistance." Then press the OK button.
2. Select "Parking Aids" and press the OK button.
3. Select "Rear Sensor" and press the OK button to turn the system on or off.

– Select "Display" to display the parking sensor in the vehicle information display when the sonar system activates.

– Select "Volume" to change the sonar system volume to "High", "Medium" or "Low".

– Select "Range" to change the sonar system distance to "Far," "Mid." or "Near."

SONAR LIMITATIONS

⚠ WARNING

Listed below are the system limitations for the sonar system. Failure to operate the vehicle in accordance with these system limitations could result in serious injury or death.

- **The system is deactivated at speeds above 6 mph (10 km/h). It is reactivated at lower speeds.**
- **Inclement weather or ultrasonic sources such as an automatic car wash, a truck's compressed-air brakes or a pneumatic drill may affect the function of the system; this may include reduced performance or a false activation.**
- **The system is not designed to prevent contact with small or moving objects. Always move slowly. The system will not detect small objects below the bumper or on the ground.**
- **The system may not detect the following objects: fluffy objects such as snow, cloth, cotton, glass-wool, etc.; thin objects such as rope, wire and chain, etc.; or wedge-shaped objects.**
- **The system may not detect objects at speeds above 3 mph (5 km/h) and may not detect certain angular or moving objects.**
- **Do not attach stickers (including transparent material), install accessories, or apply anything blocking the sensors. These conditions may reduce the ability of the system.**

SYSTEM TEMPORARILY UNAVAILABLE

When sonar blockage is detected, the system will be deactivated automatically.

The system is not available until the conditions no longer exist.

The sonar sensors may be blocked by temporary ambient conditions such as splashing water, mist or fog. The blocked condition may also be caused by objects such as ice, frost or dirt obstructing the sonar sensors.

Action to take:

When the above conditions no longer exist, the system will resume automatically.

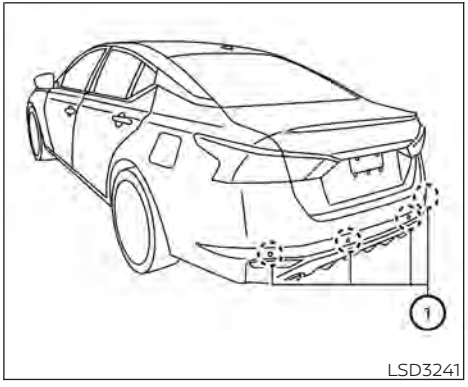

LSD3241

SYSTEM MAINTENANCE

The sonar sensors ① are located on the rear bumper. Always keep the area near the sonar sensors clean.

The sonar sensors may be blocked by temporary ambient conditions such as splashing water, mist or fog.

The blocked condition may also be caused by objects such as ice, frost or dirt obstructing the sonar sensors.

Check for and remove objects obstructing the area around the sonar sensors.

Do not attach stickers (including transparent material), install accessories or apply additional paint near the sonar sensors.

Do not strike or damage the area around the sonar sensors. It is recommended that you visit a NISSAN dealer if the area around the sonar sensors is damaged due to a collision.

FREEING A FROZEN DOOR LOCK

To prevent a door lock from freezing, apply de-icer through the key hole. If the lock becomes frozen, heat the key before inserting it into the key hole or use the remote keyless entry function on the Intelligent Key.

ANTIFREEZE

In the winter when it is anticipated that the temperature will drop below 32°F (0°C), check the antifreeze to assure proper winter protection. For additional information, see "Engine cooling system" (P. 8-5).

BATTERY

If the battery is not fully charged during extremely cold weather conditions, the battery fluid may freeze and damage the battery. To maintain maximum efficiency, the battery should be checked regularly. For additional information, see "Battery" (P. 8-14).

DRAINING OF COOLANT WATER

If the vehicle is to be left outside without antifreeze, drain the cooling system, including the engine block. Refill before operating the vehicle. For additional information, see "Changing engine coolant" (P. 8-6).

TIRE EQUIPMENT

1. SUMMER tires have a tread designed to provide superior performance on dry pavement. However, the performance of these tires will be substantially reduced in snowy and icy conditions. If you operate your vehicle on snowy or icy roads, NISSAN recommends the use of MUD & SNOW or ALL SEASON TIRES on all four wheels. It is recommended that you visit a NISSAN dealer for the tire type, size, speed rating and availability information.
2. For additional traction on icy roads, studded tires may be used. However, some U.S. states and Canadian provinces prohibit their use. Check local, state and provincial laws before installing studded tires.

Skid and traction capabilities of studded snow tires on wet or dry surfaces may be poorer than that of non-studded snow tires.

3. Tire chains may be used. For additional information, see "Tire chains" (P. 8-37).

SPECIAL WINTER EQUIPMENT

It is recommended that the following items be carried in the vehicle during winter:

- A scraper and stiff-bristled brush to remove ice and snow from the windows and wiper blades.
- A sturdy, flat board to be placed under the jack to give it firm support.
- A shovel to dig the vehicle out of snowdrifts.
- Extra washer fluid to refill the windshield-washer fluid reservoir.

DRIVING ON SNOW OR ICE

⚠ WARNING

- **Wet ice (32°F, 0°C and freezing rain), very cold snow or ice can be slick and very hard to drive on. The vehicle will have much less traction or "grip" under these conditions. Try to avoid driving on wet ice until the road is salted or sanded.**
- **Whatever the condition, drive with caution. Accelerate and slow down with care. If accelerating or downshifting too fast, the drive wheels will lose even more traction.**
- **Allow more stopping distance under these conditions. Braking should be started sooner than on dry pavement.**
- **Allow greater following distances on slippery roads.**
- **Watch for slippery spots (glare ice). These may appear on an otherwise clear road in shaded areas. If a patch of ice is seen ahead, brake before reaching it. Try not to brake while on the ice, and avoid any sudden steering maneuvers.**
- **Do not use the cruise control on slippery roads.**
- **Snow can trap dangerous exhaust gases under your vehicle. Keep snow clear of the exhaust pipe and from around your vehicle.**

ENGINE BLOCK HEATER (if so equipped)

Engine block heaters are used to assist with cold temperature starting.

The engine block heater should be used when the outside temperature is 20°F (-7°C) or lower.

⚠ WARNING

- **Do not use your engine block heater with an ungrounded electrical system or a 2-pronged adapter. You can be seriously injured by an electrical shock if you use an ungrounded connection.**
- **Disconnect and properly store the engine block heater cord before starting the engine. Damage to the cord could result in an electrical shock and can cause serious injury.**
- **Use a heavy-duty 3-wire, 3-pronged extension cord rated for at least 10 A. Plug the extension cord into a Ground Fault Interrupt (GFI) protected, grounded 110-VAC outlet. Failure to use the proper extension cord or a grounded outlet can result in a fire or electrical shock and cause serious personal injury.**

To use the engine block heater:

1. Turn the engine off.
2. Open the hood and unwrap the engine block heater cord.
3. Plug the engine block heater cord into a grounded 3-wire, 3-pronged extension cord.
4. Plug the extension cord into a Ground Fault Interrupt (GFI) protected, grounded 110-volt AC (VAC) outlet.
5. The engine block heater must be plugged in for at least 2–4 hours, depending on outside temperatures, to properly warm the engine coolant. Use an appropriate timer to turn the engine block heater on.
6. Before starting the engine, unplug and properly store the cord to keep it away from moving parts.

ACTIVE NOISE CANCELLATION/ ACTIVE SOUND ENHANCEMENT (if so equipped)

Front Microphone

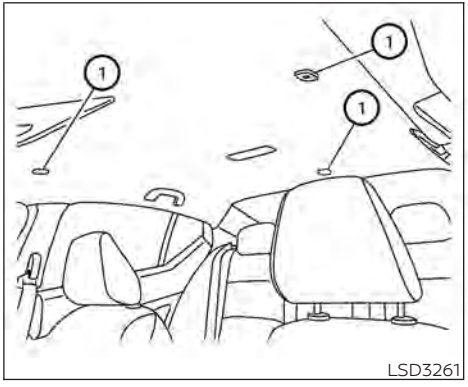

Rear Microphones

ACTIVE NOISE CANCELLATION

This system uses microphones ① located inside the vehicle to detect engine booming noise. The system then automatically generates a noise canceling sound through the speakers and woofer (if so equipped) to reduce engine booming noise.

NOTE:
To operate the active noise cancellation system properly:

- **Do not cover the speakers or woofer (if so equipped).**
- **Do not cover the microphones.**
- **Do not change or modify speakers including the woofer (if so equipped) and any audio related components such as the amplifier.**
- **Do not make any modification including sound deadening or modifications around the microphones or speakers.**

ACTIVE SOUND ENHANCEMENT

Active sound enhancement enhances existing engine sounds according to the engine speed and driving modes through the speakers and woofer (if so equipped).

MEMO

6 In case of emergency

Hazard warning flasher switch 6-2
Emergency engine shut off 6-2
Flat tire 6-3
Tire Pressure Monitoring System (TPMS) 6-3
Changing a flat tire (for models with spare tire) 6-4
Repairing flat tire (for models with emergency tire puncture repair kit) 6-11
Jump starting 6-17
Push starting 6-19
If your vehicle overheats 6-19
Towing your vehicle 6-20
Towing recommended by NISSAN 6-20
Vehicle recovery (freeing a stuck vehicle) 6-22

HAZARD WARNING FLASHER SWITCH

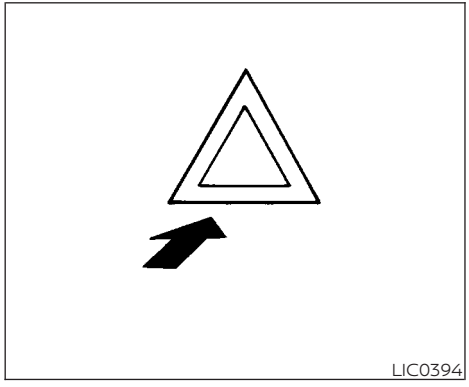

Push the switch on to warn other drivers when you must stop or park under emergency conditions. All turn signal lights flash.

⚠WARNING

- **If stopping for an emergency, be sure to move the vehicle well off the road.**
- **Do not use the hazard warning flashers while moving on the highway unless unusual circumstances force you to drive so slowly that your vehicle might become a hazard to other traffic.**
- **Turn signals do not work when the hazard warning flasher lights are on.**

The flashers will operate with the ignition switch placed in any position.

Some jurisdictions may prohibit the use of the hazard warning flasher switch while driving.

EMERGENCY ENGINE SHUT OFF

To shut off the engine in an emergency situation while driving, perform the following procedure:

- Rapidly push the push-button ignition switch three consecutive times in less than 1.5 seconds, or
- Push and hold the push-button ignition switch for more than 2 seconds.

TIRE PRESSURE MONITORING SYSTEM (TPMS)

This vehicle is equipped with the Tire Pressure Monitoring system (TPMS). It monitors tire pressure of all tires except the spare. When the low tire pressure warning light is lit, and the "Tire Pressure Low - Add Air" warning appears in the vehicle information display, one or more of your tires is significantly under-inflated. If equipped, the system also displays pressure of all tires (except the spare tire) on the display screen by sending a signal from a sensor that is installed in each wheel. If the vehicle is being driven with low tire pressure, the TPMS will activate and warn you of it by the low tire pressure warning light. This system will activate only when the vehicle is driven at speeds above 16 mph (25 km/h). For additional information, see "Warning lights, indicator lights and audible reminders" (P. 2-9) and "Tire Pressure Monitoring System (TPMS)" (P. 5-5).

⚠WARNING

- **Radio waves could adversely affect electric medical equipment. Those who use a pacemaker should contact the electric medical equipment manufacturer for the possible influences before use.**
- **If the low tire pressure warning light illuminates while driving, avoid sudden steering maneuvers or abrupt braking, reduce vehicle speed, pull off the road to a safe location and stop the vehicle as soon as possible. Driving with under-inflated tires may permanently damage the tires and increase the likelihood of tire failure. Serious vehicle damage could occur and may lead to an accident and could result in serious personal injury. Check the tire pressure for all four tires. Adjust the tire pressure to the recommended COLD tire pressure shown on the Tire and Loading Information label to turn the low tire pressure warning light OFF. If the light still illuminates while driving after adjusting the tire pressure, a tire may be flat or the TPMS may be malfunctioning. If you have a flat tire, replace it with a spare tire as soon as possible. If no tire is flat and all tires are properly inflated, have the vehicle checked. It is recommended that you visit a NISSAN dealer for this service.**
- **When using a wheel without the TPMS such as the spare tire, the TPMS will not function and the low tire pressure warning light will flash for approximately one minute. Have your tires replaced and/or TPMS system reset as soon as possible. It is recommended that you visit a NISSAN dealer for these services.**
- **Replacing tires with those not originally specified by NISSAN could affect the proper operation of the TPMS.**
- **The Genuine NISSAN Emergency Tire Repair Sealant or equivalent can be used for temporarily repairing a tire. Do not inject any other tire liquid or aerosol tire sealant into the tires, as this may cause a malfunction of tire pressure sensors.**

CHANGING A FLAT TIRE (for models with spare tire)

If you have a flat tire, follow the instructions below:

NOTE:
For models with the emergency tire puncture repair kit, a spare tire, jack and rod are not equipped as standard.

Stopping the vehicle

1. Safely move the vehicle off the road and away from traffic.
2. Turn on the hazard warning flashers.
3. Park on a level surface and apply the parking brake. Move the shift lever to P (Park).
4. Turn off the engine.
5. Raise the hood to warn other traffic and to signal professional road assistance personnel that you need assistance.
6. Have all passengers get out of the vehicle and stand in a safe place, away from traffic and clear of the vehicle.

⚠WARNING

- **Make sure the parking brake is securely applied and the Continuously Variable Transmission (CVT) is shifted into P (Park).**
- **Never change tires when the vehicle is on a slope, ice or slippery areas. This is hazardous.**
- **Never change tires if oncoming traffic is close to your vehicle. Wait for professional road assistance.**

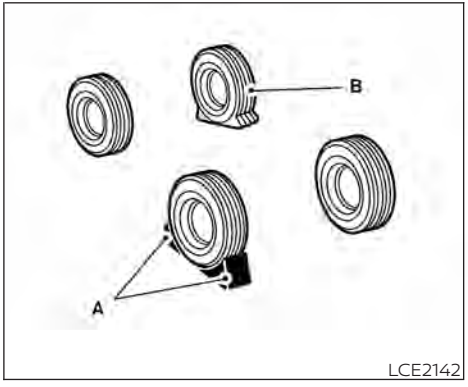

A. Blocks

B. Flat tire

Blocking wheels

Place suitable blocks at both the front and back of the wheel diagonally opposite the flat tire to prevent the vehicle from moving when it is jacked up.

⚠WARNING

Be sure to block the wheel as the vehicle may move and result in personal injury.

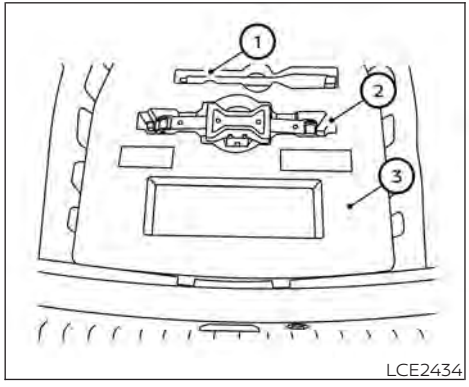

LCE2434

Getting the spare tire and tools

Open the trunk. Lift the luggage floor. Remove the wheel nut wrench ① and the jack ② from the storage cover ③. Then remove the tool storage cover ③ to access the spare tire.

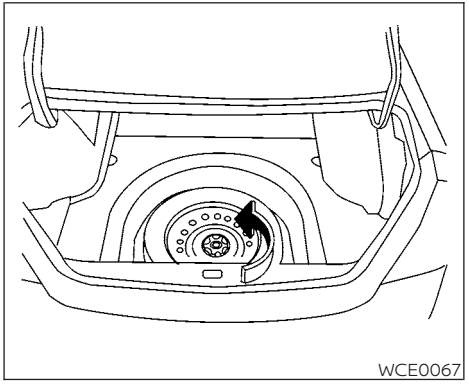
WCE0067

Turn the clamp to remove the spare tire. Remove the spare tire.

For AWD vehicles - the TEMPORARY USE ONLY spare tire must be installed to the rear wheels only. If a front tire is punctured, install the original rear tire onto the front wheel, then install the TEMPORARY USE ONLY spare tire on the rear.

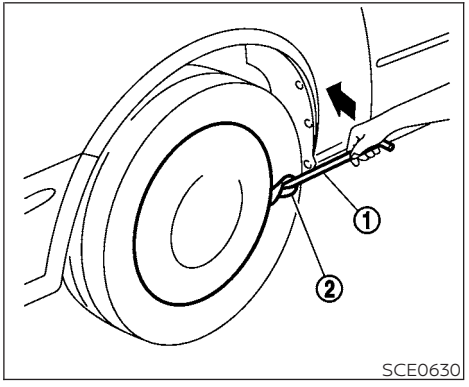

SCE0630

Removing wheel cover (if so equipped)

⚠ CAUTION

Do not use your hands to pry off wheel caps or wheel covers. Doing so could result in personal injury.

To remove the wheel cover, use the jack rod ① as illustrated.

Apply cloth ② between the wheel and jack rod to prevent damaging the wheel and wheel cover.

Use caution not to scratch the wheel cover or wheel surface.

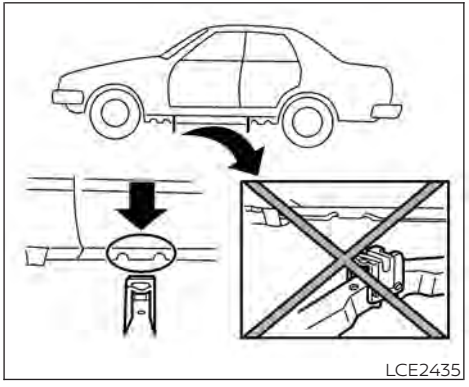

Jack-up point

Jacking up vehicle and removing the damaged tire (2WD models)

⚠WARNING

- **Never get under the vehicle while it is supported only by the jack. If it is necessary to work under the vehicle, support it with safety stands.**
- **Use only the jack provided with your vehicle to lift the vehicle. Do not use the jack provided with your vehicle on other vehicles. The jack is designed for lifting only your vehicle during a tire change.**
- **Use the correct jack-up points. Never use any other part of the vehicle for jack support.**
- **Never jack up the vehicle more than necessary.**
- **Never use blocks on or under the jack.**
- **Do not start or run the engine while vehicle is on the jack. It may cause the vehicle to move. This is especially true for vehicles with limited slip differentials.**
- **Do not allow passengers to stay in the vehicle while it is on the jack.**
- **Never run the engine with a wheel(s) off the ground. It may cause the vehicle to move.**

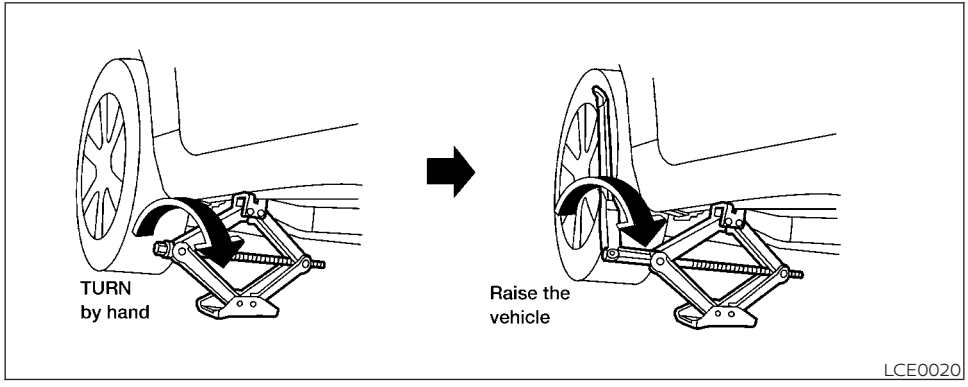

Always refer to the illustration for the correct placement and jack-up points for your specific vehicle model and jack type.

Carefully read the caution label attached to the jack body and the following instructions.

1. Loosen each wheel nut one or two turns by turning counterclockwise with the wheel nut wrench. **Do not remove the wheel nuts until the tire is off the ground.**
2. Place the jack directly under the jack-up point as illustrated so the top of the jack contacts the vehicle at the jack-up point. Align the jack head between the two notches in the front or the rear as shown. Also fit the groove of the jack head between the notches as shown.

   NOTE:
   Do not place jack on the notches between the front most and rear most jacking points.

   The jack should be used on firm and level ground.
3. To lift the vehicle, securely hold the jack lever and rod with both hands. Carefully raise the vehicle until the tire clears the ground. Remove the wheel nuts, and then remove the tire.

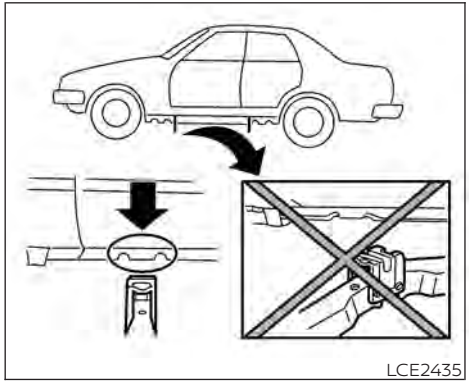

Jack-up point

Jacking up vehicle and replacing the damaged tire (AWD models)

⚠ WARNING

For AWD vehicles - the TEMPORARY USE ONLY spare tire must be installed to the rear wheels only. If a front tire is punctured, install the original rear tire onto the front wheel, then install the TEMPORARY USE ONLY spare tire on the rear. Failure to do so could cause overheating to the AWD system

⚠ WARNING

- **Never get under the vehicle while it is supported only by the jack. If it is necessary to work under the vehicle, support it with safety stands.**
- **Use only the jack provided with your vehicle to lift the vehicle. Do not use the jack provided with your vehicle on other vehicles. The jack is designed for lifting only your vehicle during a tire change.**
- **Use the correct jack-up points. Never use any other part of the vehicle for jack support.**
- **Never jack up the vehicle more than necessary.**
- **Never use blocks on or under the jack.**
- **Do not start or run the engine while vehicle is on the jack. It may cause the vehicle to move. This is especially true for vehicles with limited slip differentials.**
- **Do not allow passengers to stay in the vehicle while it is on the jack.**
- **Never run the engine with a wheel(s) off the ground. It may cause the vehicle to move.**

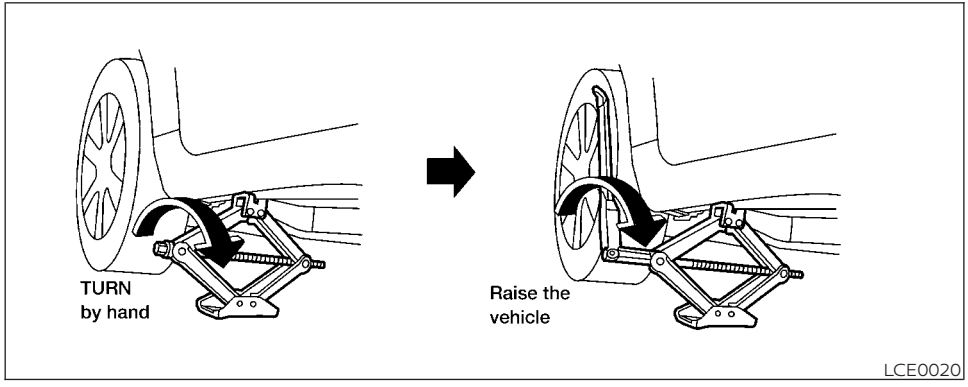

Always refer to the illustration for the correct placement and jack-up points for your specific vehicle model and jack type.

Carefully read the caution label attached to the jack body and the following instructions.

If a flat tire occurs on the front axle of AWD vehicle, the spare tire must be applied to the rear axle of the vehicle.

1. Loosen each wheel nut one or two turns by turning counterclockwise with the wheel nut wrench. **Do not remove the wheel nuts until the tire is off the ground.**
2. Place the jack directly under the jack-up point as illustrated so the top of the jack contacts the vehicle at the jack-up point. Align the jack head between the two notches in the front or the rear as shown. Also fit the groove of the jack head between the notches as shown.

   NOTE:
   Do not place jack on the notches between the front most and rear most jacking points.

   The jack should be used on firm and level ground.
3. Jack up the rear axle of the vehicle. To lift the vehicle, securely hold the jack lever and rod with both hands. Carefully raise the vehicle until the tire clears the ground. Remove the wheel nuts, and then remove the tire and set aside.
4. Apply the spare tire to the rear axle of the vehicle, replace the wheel nuts and tighten.
5. Lower the jack and further tighten the wheel nuts to the recommended torque, see "Installing the spare tire" (P. 6-10).
6. Jack up the front axle of the vehicle and remove the damaged wheel.
7. Apply the wheel that was removed from the rear axle to the front axle of the vehicle, replace the wheel nuts and tighten.
8. Lower the jack and further tighten the wheel nuts to the recommended torque, see "Installing the spare tire" (P. 6-10).

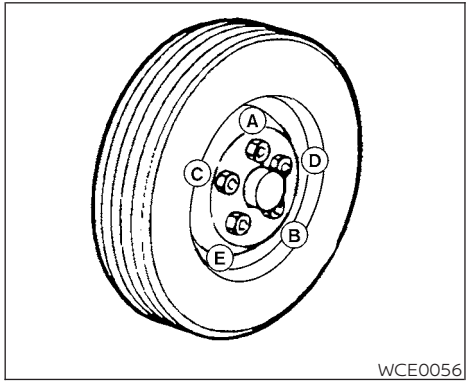

Installing the spare tire

⚠WARNING

For AWD vehicles - the TEMPORARY USE ONLY spare tire must be installed to the rear wheels only. If a front tire is punctured, install the original rear tire onto the front wheel, then install the TEMPORARY USE ONLY spare tire on the rear. Failure to do so could cause overheating to the AWD system

The spare tire is designed for emergency use. For additional information, see "Wheels and tires" (P. 8-29).

1. Clean any mud or dirt from the surface between the wheel and hub.
2. Carefully put the spare tire on and tighten the wheel nuts finger tight.
3. With the wheel nut wrench, tighten wheel nuts alternately and evenly in the sequence illustrated (Ⓐ, Ⓑ, Ⓒ, Ⓓ, Ⓔ) until they are tight.
4. Lower the vehicle slowly until the tire touches the ground. Then, with the wheel nut wrench, tighten the wheel nuts securely in the sequence illustrated (Ⓐ, Ⓑ, Ⓒ, Ⓓ, Ⓔ). Lower the vehicle completely.

⚠WARNING

- **Incorrect wheel nuts or improperly tightened wheel nuts can cause the wheel to become loose or come off. This could cause an accident.**
- **Do not use oil or grease on the wheel studs or nuts. This could cause the nuts to become loose.**
- **Retighten the wheel nuts when the vehicle has been driven for 600 miles (1,000 km) (also in cases of a flat tire, etc.).**

As soon as possible, tighten the wheel nuts to the specified torque with a torque wrench.

Wheel nut tightening torque:

83 ft-lb (113 N·m)

The wheel nuts must be kept tightened to specification at all times. It is recommended that wheel nuts be tightened to specifications at each lubrication interval.

Adjust tire pressure to the COLD pressure.

COLD pressure: After vehicle has been parked for 3 hours or more or driven less than 1 mile (1.6 km).

COLD tire pressures are shown on the Tire Load and Information label affixed to the driver side center pillar.

After adjusting tire pressure to the COLD tire pressure, the display (if so equipped) of the tire pressure information may show higher pressure than the COLD tire pressure after the vehicle has been driven more than 1 mile (1.6 km). This is because the tire pressure increases as the tire temperature rises. This does not indicate a system malfunction.

5. Securely store the flat tire in the tire well and jacking equipment in the vehicle.

NOTE:
Remove the center wheel cap before storing the flat tire.

6. Place the spare tire cover and the trunk floor carpeting over the damaged tire.
7. Close the trunk.

⚠ WARNING

- **Always make sure that the spare tire and jacking equipment are properly secured after use. Such items can become dangerous projectiles in an accident or sudden stop.**
- **The spare tire is designed for emergency use. For additional information, see "Wheels and tires" (P. 8-29).**

REPAIRING FLAT TIRE (for models with emergency tire puncture repair kit)

⚠ WARNING

- **After using Genuine NISSAN Emergency Tire Sealant to repair a minor tire puncture, do not drive the vehicle at speeds faster than 50 mph (80 km/h).**
- **Immediately after using the Genuine NISSAN Emergency Tire Sealant to repair a minor tire puncture, it is recommended that you visit a NISSAN dealer. The Genuine NISSAN Emergency Tire Sealant cannot permanently seal a punctured tire. Continuing operation of the vehicle without a permanent tire repair can lead to a crash.**
- **If you used the Genuine NISSAN Emergency Tire Sealant to repair a minor tire puncture, it is recommended that you visit a NISSAN dealer to replace the TPMS sensor in addition to repairing or replacing the tire.**
- **NISSAN recommends using only Genuine NISSAN Emergency Tire Sealant provided with your vehicle. Other tire sealants may damage the valve stem seal which can cause the tire to lose air pressure.**

This vehicle does not have a spare tire. The emergency tire puncture repair kit (Genuine NISSAN Emergency Tire Sealant) is supplied with the vehicle instead of a spare tire. It can be used to temporarily repair minor tire punctures.

If possible, have the vehicle towed to a facility that can repair or replace the flat tire. Using the emergency tire puncture repair kit may cause a malfunction of the tire pressure sensor and cause the low tire pressure warning light to illuminate.

⚠ CAUTION

- **To avoid the emergency tire puncture kit being damaged during storage or use:**
  - **Only use the emergency tire puncture repair kit on your vehicle. Do not use it on other vehicles.**

- **Only use the kit to inflate the tires of your vehicle and to check the vehicle's tire pressure.**
- **Only plug the compressor into a 12-volt DC car power point.**
- **Keep the kit free of water and dirt.**
- **Do not disassemble or modify the kit.**
- **Do not drop the kit or allow hard impacts to the kit.**

- **Do not use the emergency tire puncture repair kit under the following conditions. It is recommended that you visit a NISSAN dealer or professional road assistance.**
  - **when the sealant has passed its expiration date (shown on the label attached to the bottle)**
  - **when the cut or the puncture is approximately 0.25 in (6 mm) or longer**
  - **when the tire sidewall is damaged**
  - **when the vehicle has been driven with extremely low tire pressure**
  - **when the tire has come off the inside or the outside of the wheel**
  - **when the tire wheel is damaged**
  - **when two or more tires are flat**

If you have a flat tire, follow the instructions below.

Stopping the vehicle

1. Safely move the vehicle off the road and away from traffic.
2. Turn on the hazard warning flashers.
3. Park on a level surface and apply the parking brake.
4. Move the shift lever to the P (Park) position.
5. Turn off the engine.
6. Raise the hood to warn other traffic and to signal professional road assistance personnel that you need assistance.
7. Have all passengers get out of the vehicle and stand in a safe place, away from traffic and clear of the vehicle.

⚠ WARNING

- **Make sure the parking brake is securely applied and the vehicle is placed into the P (Park) position.**
- **Never repair tires when the vehicle is on a slope, ice or slippery areas. This is hazardous.**
- **Never repair tires if oncoming traffic is close to your vehicle. Wait for professional road assistance.**

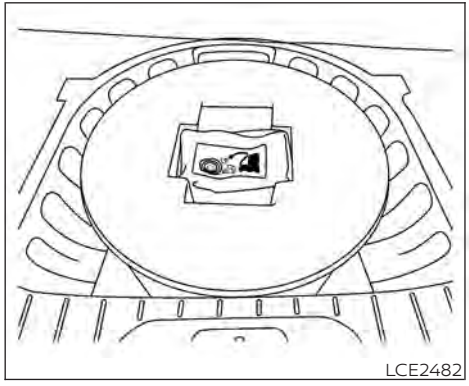

Getting emergency tire puncture repair kit

Take out the emergency tire puncture repair kit located in the cargo area. The repair kit consists of the following items:

① Tire sealant bottle

② Air compressor*

③ Speed restriction sticker

* The compressor shape may differ depending on the models.

NOTE:
For models with the emergency tire puncture repair kit, a spare tire, jack and rod are not equipped as standard.

Before using emergency tire puncture repair kit

- If any foreign object (for example, a screw or nail) is embedded in the tire, do not remove it.
- Check the expiration date of the sealant (shown on the label attached to the bottle). Never use a sealant whose expiration date has passed.

Repairing tire

⚠WARNING

Observe the following precautions when using the tire repair compound.

- **Swallowing the compound is dangerous. Immediately drink as much water as possible and seek prompt medical assistance.**
- **Rinse well with lots of water if the compound comes into contact with skin or eyes. If irritation persists, seek prompt medical attention.**
- **Keep the repair compound out of the reach of children.**
- **The emergency repair compound may cause a malfunction of the tire pressure sensors and cause the low tire pressure warning light to illuminate. Have the tire pressure sensor replaced as soon as possible.**

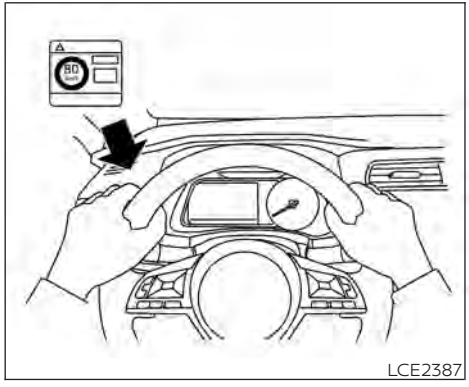

LCE2387

1. Take out the speed restriction sticker from the air compressor, then put it in a location where the driver can see it while driving.

⚠ CAUTION

Do not put the speed restriction label on the steering wheel pad, the speedometer or the warning light locations.

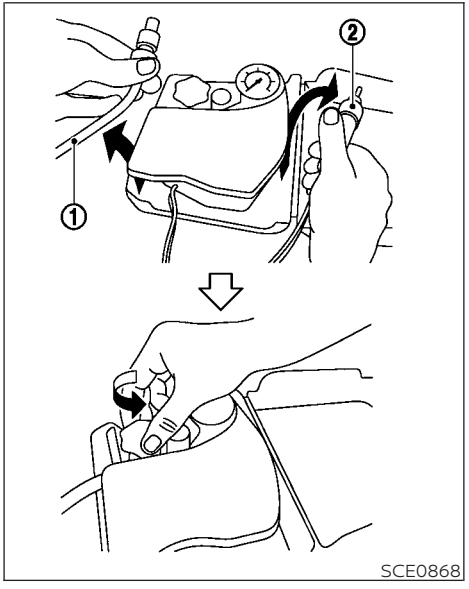

SCE0868

2. Take the hose ① and the power plug ② out of the air compressor. Remove the cap of the bottle holder from the air compressor.

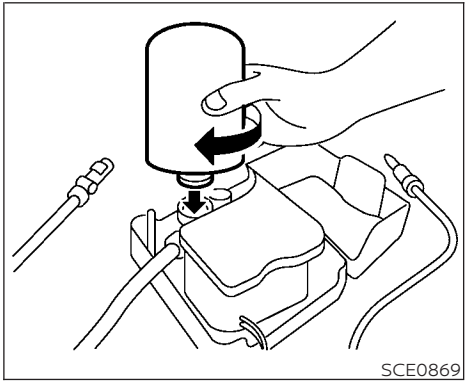

SCE0869

3. Remove the cap from the tire sealant bottle. Leave the bottle seal intact. Screw the bottle clockwise into the bottle holder to pierce the seal of the bottle.
4. Remove the cap from the tire valve on the flat tire.

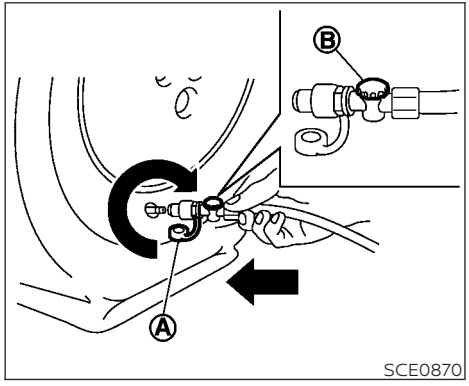

SCE0870

5. Remove the protective cap Ⓐ of the hose and screw the hose securely onto the tire valve. Make sure that the pressure release valve Ⓑ is securely tightened. Make sure that the air compressor switch is in the OFF (O) position, and then insert the power plug into the power outlet in the vehicle.

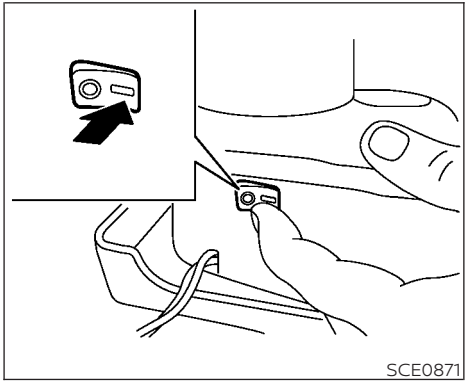
SCE0871

6. Push the power switch to the ACC position. Then turn the compressor switch to the ON (–) position and inflate the tire up to the pressure that is specified on the Tire and Loading Information label affixed to the driver's side center pillar if possible, or to the minimum of 26 psi (180 kPa). Turn the air compressor off briefly in order to check the tire pressure with the pressure gauge.

   If the tire is inflated to higher than the specified pressure, lower the tire pressure by releasing air with the pressure release valve.

NOTE:

The compressor tire pressure gauge may show a pressure reading of 87 psi (600 kPa) for about 30 seconds while inflating the tire. The pressure gauge is indicating the pressure inside the sealant can. When the sealant has been injected into the tire the pressure gauge will drop and indicate actual tire pressure.

⚠WARNING

To avoid serious personal injury while using the emergency tire puncture repair kit:

- **Securely tighten the compressor hose to the tire valve. Failure to do so can cause the sealant to spray into the air and get into your eyes or on the skin.**
- **Do not stand directly beside the damaged tire while it is being inflated because of the risk of the rupture. If there are any cracks or bumps, turn the compressor off immediately.**

If the tire pressure does not increase to **26 psi (180 kPa) within 10 minutes**, the tire may be seriously damaged and **the tire cannot be repaired with this tire repair kit.** It is recommended that you visit a NISSAN dealer.

7. When the tire pressure is at the specified amount, turn the air compressor off. If the tire cannot be inflated to the specified amount, the air compressor can be turned off at the minimum of 26 psi (180 kPa). Remove the power plug from the power outlet and quickly remove the hose from the tire valve. Attach the protective cap and valve cap. Properly stow the emergency tire puncture repair kit in the cargo area.

⚠ CAUTION

To avoid serious personal injury when stowing the emergency tire puncture repair kit:

- **Keep the sealant bottle screwed into the compressor. Failure to do so can cause the sealant to spray into the air and get into your eyes or on the skin.**

8. Immediately drive the vehicle for 10 minutes or 2 miles (3 km) at a speed below 50 mph (80 km/h).
9. After driving, make sure that the air compressor switch is in the OFF position, then screw the hose securely onto the tire valve. Check the tire pressure with the pressure gauge. Temporary repair is completed if the tire pressure does not drop.

   Make sure the pressure is adjusted to the pressure that is specified on the Tire and Loading Information label before driving.
10. If the tire pressure drops, repeat the steps from 5 to 9. If the pressure drops again or under 19 psi (130 kPa), **the tire cannot be repaired with this tire repair kit**. If the tire cannot be repaired, the driver should not drive on it any further. The car should be towed to the nearest dealership.

    The sealant bottle and hose cannot be reused to repair another punctured tire. It is recommended that you visit a NISSAN dealer to purchase replacements.

After repairing tire

It is recommended that you visit a NISSAN dealer for tire repair/replacement as soon as possible.

⚠ WARNING

- **After using Genuine NISSAN Emergency Tire Sealant to repair a minor tire puncture, do not drive the vehicle at speeds faster than 50 mph (80 km/h).**
- **Immediately after using Genuine NISSAN Emergency Tire Sealant to repair a minor tire puncture, it is recommended that you visit a NISSAN dealer. The Genuine NISSAN Emergency Tire Sealant cannot permanently seal a punctured tire. Continuing operation of the vehicle without a permanent tire repair can lead to a crash.**
- **Do not inject any tire liquid or aerosol tire sealant into the tires, as this may cause a malfunction of the tire pressure sensors.**

- **If you used the Genuine NISSAN Emergency Tire Sealant to repair a minor tire puncture, it is recommended that you visit a NISSAN dealer to replace the TPMS sensor in addition to repairing or replacing the tire.**
- **NISSAN recommends using only Genuine NISSAN Emergency Tire Sealant provided with your vehicle. Other tire sealants may damage the valve stem seal which can cause the tire to lose air pressure.**

To start your engine with a booster battery, the instructions and precautions below must be followed.

⚠ WARNING

- **If done incorrectly, jump starting can lead to a battery explosion, resulting in severe injury or death. It could also damage your vehicle.**
- **Explosive hydrogen gas is always present in the vicinity of the battery. Keep all sparks and flames away from the battery.**
- **Do not allow battery fluid to come into contact with eyes, skin, clothing or painted surfaces. Battery fluid is a corrosive sulfuric acid solution which can cause severe burns. If the fluid should come into contact with anything, immediately flush the contacted area with water.**
- **Keep battery out of the reach of children.**
- **The booster battery must be rated at 12 volts. Use of an improperly rated battery can damage your vehicle.**
- **Whenever working on or near a battery, always wear suitable eye protectors (for example, goggles or industrial safety spectacles) and remove rings, metal bands, or any other jewelry. Do not lean over the battery when jump starting.**
- **Do not attempt to jump start a frozen battery. It could explode and cause serious injury.**
- **Your vehicle has an automatic engine cooling fan. It could come on at any time. Keep hands and other objects away from it.**

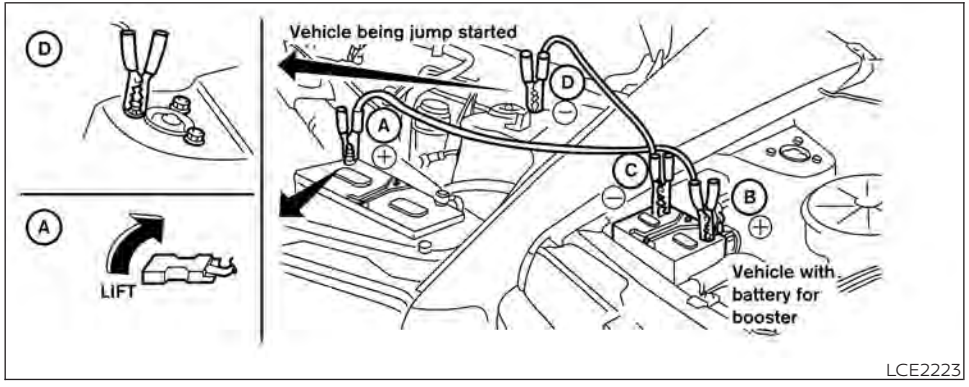

⚠ WARNING

Always follow the instructions below. Failure to do so could result in damage to the charging system and cause personal injury.

1. If the booster battery is in another vehicle, position the two vehicles to bring their batteries near each other.

   Do not allow the two vehicles to touch.

2. Apply the parking brake. Move the shift lever to P (Park). Switch off all unnecessary electrical systems (lights, heater, air conditioner, etc.).
3. Place the ignition switch in the LOCK position.
4. Connect the jumper cables in the sequence illustrated (Ⓐ, Ⓑ, Ⓒ, Ⓓ).

⚠ CAUTION

- **Always connect positive (+) to positive (+) and negative (–) to body ground (for example, strut mounting bolt, engine lift bracket, etc.) — not to the battery.**
- **Make sure the jumper cables do not touch moving parts in the engine compartment and that the cable clamps do not contact any other metal.**

5. Start the engine of the booster vehicle and let it run for a few minutes.
6. Keep the engine speed of the booster vehicle at about 2,000 rpm and start the engine of the vehicle being jump started.

⚠ CAUTION

Do not keep the starter motor engaged for more than 10 seconds. If the engine does not start right away, place the ignition switch in the OFF position and wait 3 to 4 seconds before trying again.

7. After starting the engine, carefully disconnect the negative cable and then the positive cable.

PUSH STARTING

⚠ CAUTION

- **Do not push start this vehicle. The three-way catalyst may be damaged.**
- **Continuously Variable Transmission (CVT) models cannot be push-started or tow-started. Attempting to do so may cause transmission damage.**

IF YOUR VEHICLE OVERHEATS

If your vehicle is overheating (indicated by an extremely high temperature gauge reading), or if you feel a lack of engine power, detect abnormal noise, etc. take the following steps.

⚠ WARNING

- **Do not continue to drive if your vehicle overheats. Doing so could cause engine damage or a vehicle fire.**
- **To avoid the danger of being scalded, never remove the radiator or coolant reservoir cap while the engine is still hot. When the radiator or coolant reservoir cap is removed, pressurized hot water will spurt out, possibly causing serious injury.**
- **Do not open the hood if steam is coming out.**

1. Move the vehicle safely off the road, apply the parking brake and move the shift lever to P (Park).

   Do not stop the engine.

2. Turn off the air conditioner. Open all the windows, move the heater or air conditioner temperature control to maximum hot and fan control to high speed.
3. Get out of the vehicle. Look and listen for steam or coolant escaping from the radiator before opening the hood. (If steam or coolant is escaping, turn off the engine.) Do not open the hood further until no steam or coolant can be seen.
4. Open the engine hood.

⚠ WARNING

If steam or water is coming from the engine, stand clear to prevent getting burned.

5. Visually check drive belts for damage or looseness. Also check if the cooling fan is running. The radiator hoses and radiator should not leak water. If coolant is leaking, the water pump belt is missing or loose, or the cooling fan does not run, stop the engine.

⚠ WARNING

Be careful not to allow your hands, hair, jewelry or clothing to come into contact with, or get caught in, engine belts or the engine cooling fan. The engine cooling fan can start at any time.

6. After the engine cools down, check the coolant level in the engine coolant reservoir tank with the engine running. Add coolant to the engine coolant reservoir tank if necessary. It is recommended that you visit a NISSAN dealer for this service.

When towing your vehicle, all State (Provincial in Canada) and local regulations for towing must be followed. Incorrect towing equipment could damage your vehicle. Towing instructions are available from a NISSAN dealer. Local service operators are generally familiar with the applicable laws and procedures for towing. To assure proper towing and to prevent accidental damage to your vehicle, NISSAN recommends having a service operator tow your vehicle. It is advisable to have the service operator carefully read the following precautions:

WARNING

- **Never ride in a vehicle that is being towed.**
- **Never get under your vehicle after it has been lifted by a tow truck.**

CAUTION

- **When towing, make sure that the transmission, axles, steering system and powertrain are in working condition. If any of these conditions apply, dollies or a flatbed tow truck must be used.**
- **Always attach safety chains before towing.**

For additional information about towing your vehicle behind a Recreational Vehicle (RV), see "Flat towing" (P. 10-20).

TOWING RECOMMENDED BY NISSAN

NISSAN recommends towing your vehicle based upon the type of drivetrain. For additional information, refer to the diagrams in this section to ensure that your vehicle is properly towed.

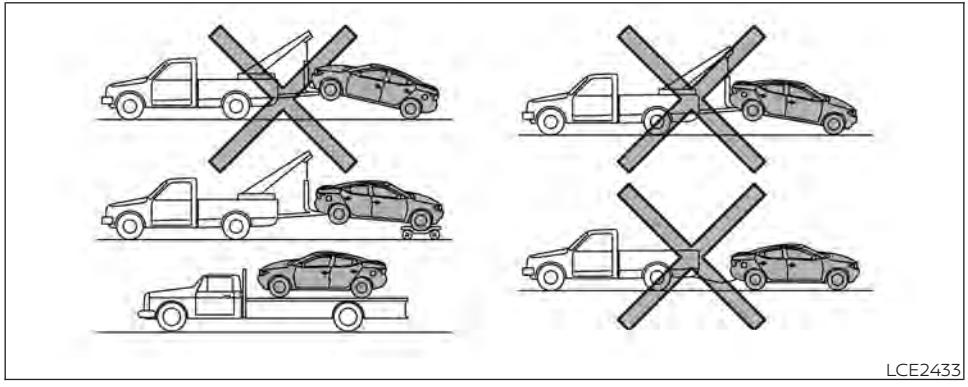

All-Wheel Drive (AWD) models with Continuously Variable Transmission (CVT)

NISSAN recommends that towing dollies be used when towing your vehicle or place the vehicle on a flatbed truck as illustrated.

⚠ CAUTION

Never tow All-Wheel Drive (AWD) models equipped with a Continuously Variable Transmission (CVT) with any of the wheels on the ground as this may cause serious and expensive damage to the transfer case and transmission.

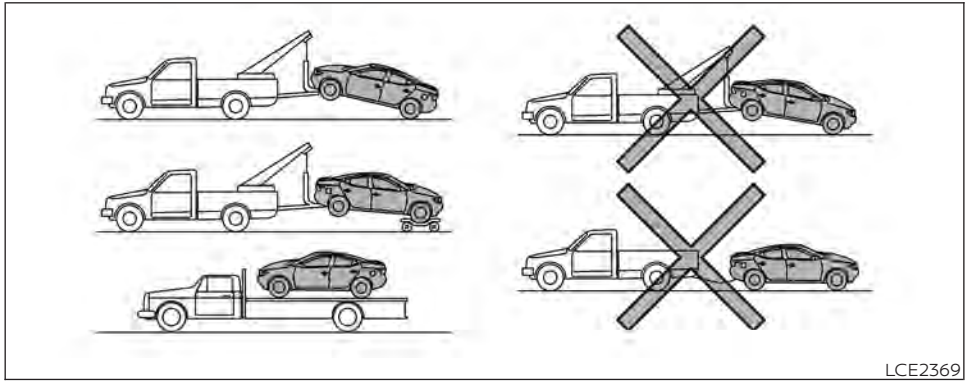

Two-Wheel Drive models with Continuously Variable Transmission (CVT)

NISSAN recommends that your vehicle be towed with the driving (front) wheels off the ground or place the vehicle on a flatbed truck as illustrated.

⚠ CAUTION

- **Never tow Continuously Variable Transmission (CVT) models with the front wheels on the ground or four wheels on the ground (forward or backward), as this may cause serious and expensive damage to the transmission. If it is necessary to tow the vehicle with the rear wheels raised always use towing dollies under the front wheels.**
- **When towing Continuously Variable Transmission (CVT) models with the rear wheels on the ground or on towing dollies:**
  - **Place the ignition switch in the OFF position, and secure the steering wheel in a straight-ahead position with a rope or similar device. Never secure the steering wheel by placing the ignition switch in the LOCK position. This may damage the steering lock mechanism (for models with a steering lock mechanism).**

VEHICLE RECOVERY (freeing a stuck vehicle)

⚠ WARNING

To avoid vehicle damage, serious personal injury or death when recovering a stuck vehicle:

- **Contact a professional towing service to recover the vehicle if you have any questions regarding the recovery procedure.**
- **Tow chains or cables must be attached only to main structural members of the vehicle.**

- **Do not use the vehicle tie-downs to tow or free a stuck vehicle.**
- **Only use devices specifically designed for vehicle recovery and follow the manufacturer's instructions.**
- **Always pull the recovery device straight out from the front of the vehicle. Never pull at an angle.**
- **Route recovery devices so they do not touch any part of the vehicle except the attachment point.**

If your vehicle is stuck in sand, snow, mud, etc., use a tow strap or other device designed specifically for vehicle recovery. Always follow the manufacturer's instructions for the recovery device.

Rocking a stuck vehicle

⚠ WARNING

- **Stand clear of a stuck vehicle.**
- **Do not spin your tires at high speed. This could cause them to explode and result in serious injury. Parts of your vehicle could also overheat and be damaged.**

If your vehicle is stuck in sand, snow, mud, etc., use the following procedure:

1. Turn off the Vehicle Dynamic Control (VDC) system.
2. Make sure the area in front and behind the vehicle is clear of obstructions.
3. Turn the steering wheel right and left to clear an area around the front tires.
4. Slowly rock the vehicle forward and backward.
   - Shift back and forth between R (Reverse) and D (Drive).
   - Apply the accelerator as little as possible to maintain the rocking motion.
   - Release the accelerator pedal before shifting between R (Reverse) and D (Drive).
   - Do not spin the tires above 35 mph (55 km/h).
5. If the vehicle cannot be freed after a few tries, contact a professional towing service to remove the vehicle.

MEMO

7 Appearance and care

Cleaning exterior 7-2
Washing 7-2
Waxing 7-3
Removing spots 7-3
Underbody 7-3
Glass 7-3
Aluminum alloy wheels (if so equipped) 7-4
Chrome parts 7-4
Tire dressings 7-4
Cleaning interior 7-5
Air fresheners 7-5
Power moonroof (if so equipped) 7-6
Floor mats (if so equipped) 7-6
Seat belts 7-7
Corrosion protection 7-8
Most common factors contributing to vehicle corrosion 7-8
Environmental factors influence the rate of corrosion 7-8
Protect your vehicle from corrosion 7-8

In order to maintain the appearance of your vehicle, it is important to take proper care of it.

To protect the paint surfaces, wash your vehicle as soon as you can:

- After a rainfall to prevent possible damage from acid rain.
- After driving on coastal roads.
- When contaminants such as soot, bird droppings, tree sap, metal particles or bugs get on the paint surface.
- When dust or mud builds up on the surface.

Whenever possible, store or park your vehicle inside a garage or in a covered area.

When it is necessary to park outside, park in a shady area or protect the vehicle with a body cover.

Be careful not to scratch the paint surface when putting on or removing the body cover.

WASHING

Wash dirt off with a wet sponge and plenty of water. Clean the vehicle thoroughly using a mild soap, a special vehicle soap or general purpose dishwashing liquid mixed with clean, lukewarm (never hot) water.

⚠ CAUTION

- **Do not concentrate water spray directly on the sonar sensors (if so equipped) on the bumper as this will result in damage to the sensors. Do not use pressure washers capable of spraying water over 1,200 psi (8,274 kPa) to wash your vehicle. Use of high-pressure washers over 1,200 psi (8,274 kPa) can result in damage to or removal of paint or graphics. Avoid using a high-pressure washer closer than 12 inches (30 cm) to the vehicle. Always use a wide-angle nozzle only, keep the nozzle moving and do not concentrate the water spray on any one area.**
- **Do not use car washes that use acid in the detergent. Some car washes, especially brushless ones, use some acid for cleaning. The acid may react with some plastic vehicle components, causing them to crack. This could affect their appearance, and also could cause them not to function properly. Always check with your car wash to confirm that acid is not used.**
- **Do not wash the vehicle with strong household soap, strong chemical detergents, gasoline or solvents.**
- **Do not wash the vehicle in direct sunlight or while the vehicle body is hot, as the surface may become water-spotted.**
- **Avoid using tight-napped or rough cloths, such as washing mitts. Care must be taken when removing caked-on dirt or other foreign substances so the paint surface is not scratched or damaged.**

Rinse the vehicle thoroughly with plenty of clean water.

Inside edges, seams and folds on the doors, hatches and hood are particularly vulnerable to the effects of road salt. Therefore, these areas must be cleaned regularly. Take care that the drain holes in the lower edge of the door are open. Spray water under the body and in the wheel wells to loosen the dirt and wash away road salt.

A damp chamois can be used to dry the vehicle to avoid water spots.

WAXING

Regular waxing protects the paint surface and helps retain new vehicle appearance. Polishing is recommended to remove built-up wax residue and to avoid a weathered appearance before re-applying wax.

It is recommended that you visit a NISSAN dealer to assist you in choosing the proper product.

- Wax your vehicle only after a thorough washing. Follow the instructions supplied with the wax.
- Do not use a wax containing any abrasives, cutting compounds or cleaners that may damage the vehicle finish.

Machine compounding or aggressive polishing on a base coat/clear coat paint finish may dull the finish or leave swirl marks.

REMOVING SPOTS

Remove tar and oil spots, industrial dust, insects, and tree sap as quickly as possible from the surface of the paint to avoid lasting damage or staining. Special cleaning products are available at a NISSAN dealer or any automotive accessory store. It is recommended that you visit a NISSAN dealer for these products.

UNDERBODY

In areas where road salt is used in winter, it is necessary to clean the underbody regularly in order to prevent dirt and salt from building up and causing the acceleration of corrosion on the underbody and suspension. Before the winter period and again in the spring, the underseal must be checked and, if necessary, re-treated.

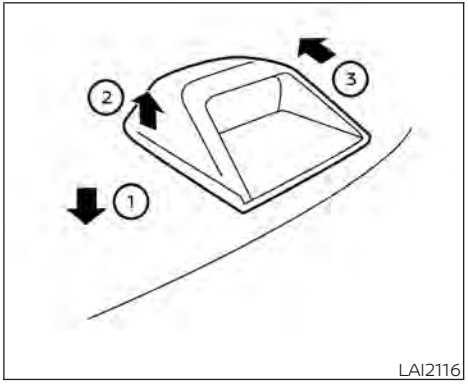

GLASS

When cleaning the rear window, it may be easier to clean if the high-mounted stop light is removed first.

Be careful when removing the high-mounted stop light to reduce the risk of damaging the high-mounted stop light wires.

To remove the high-mounted stop light:

1. Push downward on the plastic shelf around the stop light ①, lift upwards on the stop light, releasing it from the shelf ②.

2. Once it is released from the shelf, gently pull the stop light towards the rear seat-back ③.

The high-mounted stop light must be properly reinstalled before driving your vehicle.

Use glass cleaner to remove smoke and dust film from the glass surfaces. It is normal for glass to become coated with a film after the vehicle is parked in the hot sun. Glass cleaner and a soft cloth will easily remove this film.

To reinstall the high-mounted stop light, reverse steps ③, then ②.

⚠ CAUTION

When cleaning the inside of the windows, do not use sharp-edged tools, abrasive cleaners or chlorine-based disinfectant cleaners. They could damage the electrical conductors, radio antenna elements or rear window defogger elements.

ALUMINUM ALLOY WHEELS (if so equipped)

Wash the wheels regularly with a sponge dampened in a mild soap solution, especially during winter months in areas where road salt is used. If not removed, road salt can discolor the wheels.

⚠ CAUTION

Follow the directions below to avoid staining or discoloring the wheels:

- **Do not use a cleaner that uses strong acid or alkali contents to clean the wheels.**
- **Do not apply wheel cleaners to the wheels when they are hot. The wheel temperature should be the same as ambient temperature.**
- **Rinse the wheel to completely remove the cleaner within 15 minutes after the cleaner is applied.**

CHROME PARTS

Clean all chrome parts regularly with a non-abrasive chrome polish to maintain the finish.

TIRE DRESSINGS

NISSAN does not recommend the use of tire dressings. Tire manufacturers apply a coating to the tires to help reduce discoloration of the rubber. If a tire dressing is applied to the tires, it may react with the coating and form a compound. This compound may come off the tire while driving and stain the vehicle paint.

If you choose to use a tire dressing, take the following precautions:

- Use a water-based tire dressing. The coating on the tire dissolves more easily than with an oil-based tire dressing.
- Apply a light coat of tire dressing to help prevent it from entering the tire tread/grooves (where it would be difficult to remove).
- Wipe off excess tire dressing using a dry towel. Make sure the tire dressing is completely removed from the tire tread/grooves.
- Allow the tire dressing to dry as recommended by the tire dressing manufacturer.

Occasionally remove loose dust from the interior trim, plastic parts and seats using a vacuum cleaner or soft bristled brush. Wipe the vinyl and leather (if so equipped) surfaces with a clean, soft cloth dampened in mild soap solution, then wipe clean with a dry, soft cloth.

Regular care and cleaning is required in order to maintain the appearance of the leather (if so equipped).

Before using any fabric protector, read the manufacturer's recommendations. Some fabric protectors contain chemicals that may stain or bleach the seat material.

Use a cloth dampened only with water to clean the meter and gauge lens.

⚠ WARNING

Do not use water or acidic cleaners (hot steam cleaners) on the seat. This can damage the seat or occupant classification sensor. This can also affect the operation of the air bag system and result in serious personal injury.

⚠ CAUTION

- **Never use benzine, thinner or any similar material.**
- **Small dirt particles can be abrasive and damaging to leather surfaces and should be removed promptly. Do not use saddle soap, car waxes, polishes, oils, cleaning fluids, solvents, detergents or ammonia-based cleaners as they may damage the leather's natural finish.**
- **Never use fabric protectors unless recommended by the manufacturer.**
- **Do not use glass or plastic cleaner on meter or gauge lens covers. It may damage the lens cover.**
- **Never use chloride solutions for cleaning aluminum decoratives (if so equipped), damage may occur.**

AIR FRESHENERS

Most air fresheners use a solvent that could affect the vehicle interior. If you use an air freshener, take the following precautions:

- Hanging-type air fresheners can cause permanent discoloration when they contact vehicle interior surfaces. Place the air freshener in a location that allows it to hang free and not contact an interior surface.
- Liquid-type air fresheners typically clip on the vents. These products can cause immediate damage and discoloration when spilled on interior surfaces.

Carefully read and follow the manufacturer's instructions before using the air fresheners.

POWER MOONROOF (if so equipped)

The sunshade is made from a tricot material.

⚠CAUTION

To help prevent damaging the moonroof while cleaning:

- **Do not rub the material with a cloth. Doing so can damage the surface of the material or cause a stain to spread.**
- **Never use benzine, thinner or any similar chemical to clean the sunshade. This may discolor the moonroof and damage the surface.**
- **Clean water based stains by patting the surface with a clean soft cloth dampened in warm water. Press a clean dry cloth onto the surface to remove as much dampness as possible and then let air dry.**
- **Clean oil based stains by patting the surface with a clean soft cloth dampened in warm water. Press a clean dry cloth onto the surface to remove as much dampness as possible and then let air dry.**

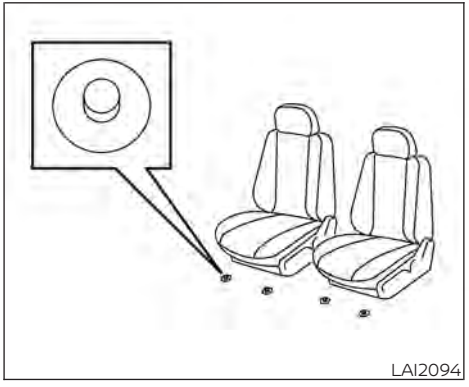

FLOOR MATS (if so equipped)

⚠WARNING

To avoid potential pedal interference that may result in a collision, injury or death:

- **NEVER place a floor mat on top of another floor mat in the driver front position or install them upside down or backwards.**
- **Use only Genuine NISSAN floor mats, or equivalent floor mats, that are specifically designed for use in your vehicle model and model year.**
- **Properly position the mats in the floorwell using the floor mat positioning aid. For additional information, see "Floor mat installation" (P. 7-6).**
- **Make sure the floor mat does not interfere with pedal operation.**
- **Periodically check the floor mats to make sure they are properly installed.**
- **After cleaning the vehicle interior, check the floor mats to make sure they are properly installed.**

The use of Genuine NISSAN floor mats can extend the life of your vehicle carpet and make it easier to clean the interior. Mats should be maintained with regular cleaning and replaced if they become excessively worn.

Floor mat installation

Your vehicle is equipped with floor mat positioning aids. The number and shape of the floor mat positioning aid for each seating position varies depending on the vehicle.

When installing Genuine NISSAN floor mats, follow the installation instructions provided with the mat and the following:

1. With the ignition in the OFF position, the shift lever in P (Park) position and with the parking brake fully applied, position the floor mat in the floorwell so that the floor mat grommet holes are aligned with the positioning aids.
2. Secure the grommet holes into the positioning aids and ensure that the floor mat is properly positioned.
3. Make sure the floor mat does not interfere with pedal operation. With the ignition still in the OFF position, the shift lever in the P (Park) position and with the parking brake applied, fully apply and release all pedals. The floor mat must not interfere with pedal operation or prevent the pedal from returning to its normal position.

It is recommended that you visit a NISSAN dealer for details about installing the floor mats in your vehicle.

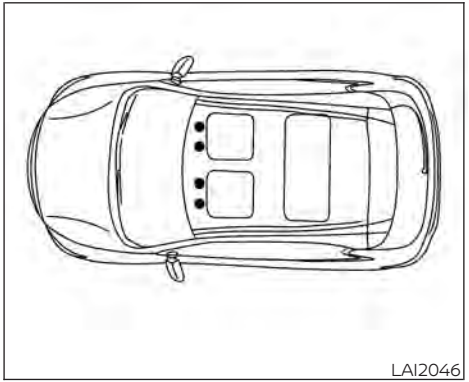

Positioning aids

The illustration shows the location of the floor mat positioning aids.

SEAT BELTS

The seat belts can be cleaned by wiping them with a sponge dampened in a mild soap solution. Allow the belts to dry completely in the shade before using them. For additional information, see "Seat belt maintenance" (P. 1-20).

⚠ WARNING

Do not allow wet seat belts to roll up in the retractor. NEVER use bleach, dye or chemical solvents to clean the seat belts, since these materials may severely weaken the seat belt webbing.

MOST COMMON FACTORS CONTRIBUTING TO VEHICLE CORROSION

Most vehicle corrosion is caused by:

- The accumulation of moisture-retaining dirt and debris in body panel sections, cavities, and other areas.
- Damage to paint and other protective coatings caused by gravel and stone chips or minor traffic collisions.

ENVIRONMENTAL FACTORS INFLUENCE THE RATE OF CORROSION

Moisture

Accumulation of sand, dirt and water on the vehicle body underside can accelerate corrosion. Wet floor coverings will not dry completely inside the vehicle and should be removed for drying to avoid floor panel corrosion.

Relative humidity

Corrosion will be accelerated in areas of high relative humidity, especially those areas where the temperatures stay above freezing and where atmospheric pollution exists and road salt is used.

Temperature

High temperatures accelerate the rate of corrosion to those parts which are not well ventilated.

Air pollution

Industrial pollution, the presence of salt in the air in coastal areas, or heavy road salt use accelerates the corrosion process. Road salt also accelerates the disintegration of paint surfaces.

PROTECT YOUR VEHICLE FROM CORROSION

- Wash and wax your vehicle often to keep the vehicle clean.
- Always check for minor damage to the paint and repair it as soon as possible.
- Keep drain holes at the bottom of the doors open to avoid water accumulation.
- Check the underbody for accumulation of sand, dirt or salt. If present, wash with water as soon as possible.

⚠ CAUTION

- **NEVER remove dirt, sand or other debris from the passenger compartment by washing it out with a hose. Remove dirt with a vacuum cleaner or broom.**
- **Never allow water or other liquids to come in contact with electronic components inside the vehicle as this may damage them.**

Chemicals used for road surface de-icing are extremely corrosive. They accelerate corrosion and deterioration of underbody components such as the exhaust system, fuel and brake lines, brake cables, floor pan and fenders.

In winter, the underbody must be cleaned periodically.

For additional protection against rust and corrosion, which may be required in some areas, it is recommended that you visit a NISSAN dealer.

8 Do-it-yourself

Maintenance precautions 8-2
Engine compartment check locations 8-3
Engine cooling system 8-5
Checking engine coolant level 8-6
Changing engine coolant 8-6
Engine oil 8-7
Checking engine oil level 8-7
Changing engine oil and oil filter 8-8
Continuously Variable Transmission (CVT) fluid 8-12
Brake fluid 8-12
Windshield-washer fluid 8-13
Windshield-washer fluid reservoir 8-13
Battery 8-14
Jump starting 8-15
Variable voltage control system 8-16
Drive belt 8-16
Spark plugs 8-17
Replacing spark plugs 8-17
Air cleaner 8-18
In-cabin microfilter 8-18
Windshield wiper blades 8-19
Cleaning 8-19
Replacing 8-19
Brakes 8-20
Fuses 8-21
Engine compartment 8-21
Passenger compartment 8-22
Battery replacement 8-23
NISSAN Intelligent Key® 8-24
Lights 8-25
Headlights 8-25
Fog lights (if so equipped) 8-26
Exterior and interior lights 8-26
Wheels and tires 8-29
Tire pressure 8-29
Tire labeling 8-33
Types of tires 8-36
Tire chains 8-37
Changing wheels and tires 8-39

MAINTENANCE PRECAUTIONS

When performing any inspection or maintenance work on your vehicle, always take care to prevent serious accidental injury to yourself or damage to the vehicle. The following are general precautions which should be closely observed.

⚠ WARNING

- **Park the vehicle on a level surface, apply the parking brake securely and block the wheels to prevent the vehicle from moving. Move the shift lever to P (Park).**
- **Be sure the ignition switch is in the OFF or LOCK position when performing any parts replacement or repairs.**
- **If you must work with the engine running, keep your hands, clothing, hair and tools away from moving fans, belts and any other moving parts.**
- **It is advisable to secure or remove any loose clothing and remove any jewelry, such as rings, watches, etc. before working on your vehicle.**
- **Always wear eye protection whenever you work on your vehicle.**
- **Your vehicle is equipped with an automatic engine cooling fan. It may come on at any time without warning, even if the ignition switch is in the OFF position and the engine is not running. To avoid injury, always disconnect the negative battery cable before working near the fan.**
- **If you must run the engine in an enclosed space such as a garage, be sure there is proper ventilation for exhaust gases to escape.**
- **Never get under the vehicle while it is supported only by a jack. If it is necessary to work under the vehicle, support it with safety stands.**
- **Keep smoking materials, flame and sparks away from the fuel tank and battery.**
- **On gasoline engine models, the fuel filter or fuel lines should be serviced. It is recommended that you visit a NISSAN dealer for this service because the fuel lines are under high pressure even when the engine is off.**

⚠ CAUTION

- **Do not work under the hood while the engine is hot. Turn the engine off and wait until it cools down.**
- **Avoid contact with used engine oil and coolant. Improperly disposed engine oil, engine coolant and/or other vehicle fluids can damage the environment. Always conform to local regulations for disposal of vehicle fluid.**
- **Never leave the engine or the transmission related component harness connector disconnected while the ignition switch is in the ON position.**
- **Never connect or disconnect the battery or any transistorized component while the ignition switch is in the ON position.**

This "Do-it-yourself" section gives instructions regarding only those items which are relatively easy for an owner to perform.

A Genuine NISSAN service manual is also available. For additional information, see "Owner's Manual/Service Manual order information" (P. 10-26).

You should be aware that incomplete or improper servicing may result in operating difficulties or excessive emissions, and could affect warranty coverage. **If in doubt about any servicing, it is recommended that you have it done by a NISSAN dealer.**

ENGINE COMPARTMENT CHECK LOCATIONS

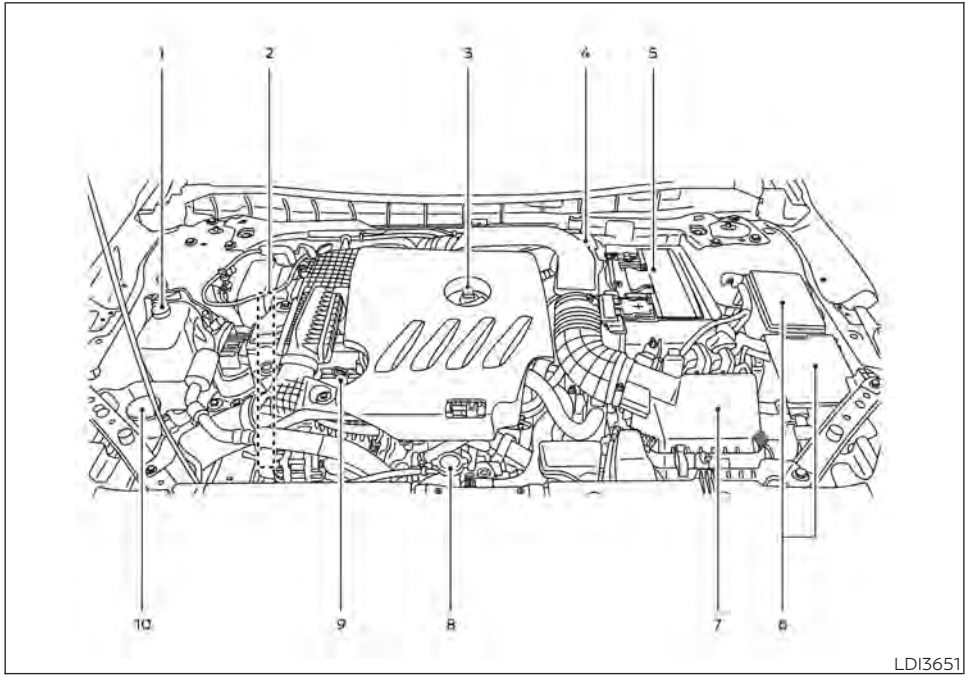

2.0L 4 cylinder (KR20DDET engine model)

1. Engine coolant reservoir
2. Drive belt location
3. Engine oil filler cap
4. Brake fluid reservoir
5. Battery
6. Fuse/Fusible link box
7. Air cleaner
8. Radiator cap
9. Engine oil dipstick
10. Windshield-washer fluid reservoir

NOTE:

Your vehicle may not be equipped with an engine cover.

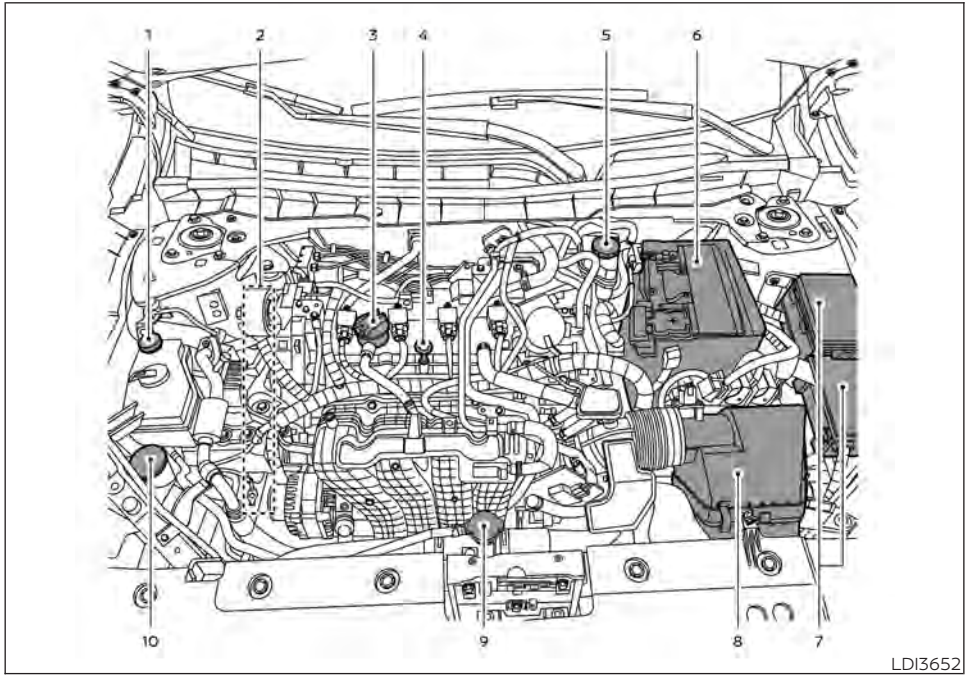

2.5L 4 cylinder (PR25DD engine model)

1. Engine coolant reservoir
2. Drive belt location
3. Engine oil filler cap
4. Engine oil dipstick
5. Brake fluid reservoir
6. Battery
7. Fuse/Fusible link box
8. Air cleaner
9. Radiator cap
10. Windshield-washer fluid reservoir

NOTE:

Your vehicle may not be equipped with an engine cover.

ENGINE COOLING SYSTEM

The engine cooling system is filled at the factory with a pre-diluted mixture of 50% Genuine NISSAN Long Life Antifreeze/Coolant (blue) and 50% water to provide year-round antifreeze and coolant protection. The antifreeze solution contains rust and corrosion inhibitors. Additional engine cooling system additives are not necessary.

⚠ WARNING

- **Never remove the radiator or coolant reservoir cap when the engine is hot. Wait until the engine and radiator cool down. Serious burns could be caused by high pressure fluid escaping from the radiator. For additional information on precautions, see "If your vehicle overheats" (P. 6-19).**
- **The radiator is equipped with a pressure type radiator cap. To prevent engine damage, use only a Genuine NISSAN radiator cap.**

⚠ CAUTION

- **Never use any cooling system additives such as radiator sealer. Additives may clog the cooling system and cause damage to the engine, transmission and/or cooling system.**
- **When adding or replacing coolant, be sure to use only Genuine NISSAN Long Life Antifreeze/Coolant (blue) or equivalent. Genuine NISSAN Long Life Antifreeze/Coolant (blue) is pre-diluted to provide antifreeze protection to -34° F (-37° C). If additional freeze protection is needed due to weather where you operate your vehicle, add Genuine NISSAN Long Life Antifreeze/Coolant (blue) concentrate following the directions on the container. If an equivalent coolant other than Genuine NISSAN Long Life Antifreeze/Coolant (blue) is used, follow the coolant manufacturer's instructions to maintain minimum antifreeze protection to -34° F (-37° C). The use of other types of coolant solutions other than Genuine NISSAN Long Life Antifreeze/Coolant (blue) or equivalent may damage the engine cooling system.**
- **The life expectancy of the factory-fill coolant is 105,000 miles (168,000 km) or 7 years. Mixing any other type of coolant other than Genuine NISSAN Long Life Antifreeze/Coolant (blue) (or equivalent coolant), including Genuine NISSAN Long Life Antifreeze/Coolant (green), or the use of non-distilled water may reduce the life expectancy of the factory-fill coolant. For additional information, see the "Maintenance and schedules" section of this manual.**

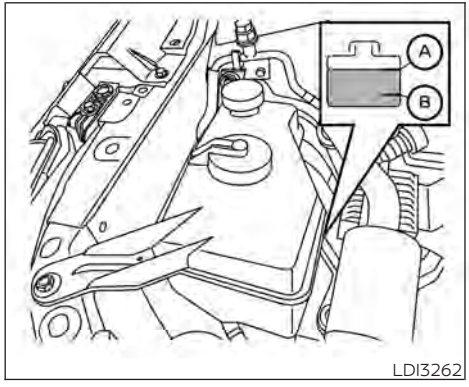

CHECKING ENGINE COOLANT LEVEL

Check the coolant level **in the reservoir when the engine is cold.** If the coolant level is below the MIN level Ⓑ, add coolant to the MAX level Ⓐ.

If the reservoir is empty, check the coolant level in the radiator **when the engine is cold.** If there is insufficient coolant in the radiator, fill the radiator with coolant up to the filler opening and also add it to the reservoir up to the MAX level Ⓐ. Start the engine and allow the engine coolant temperature gauge to rise until it reaches normal operating temperature. For additional information, see "Engine coolant temperature gauge" (P. 2-6). Turn off the engine once the engine coolant temperature has reached normal operating range. Allow the engine coolant to cool to ambient temperature. Recheck the coolant level in the reservoir and add coolant to the MAX level if necessary.

This vehicle contains Genuine NISSAN Long Life Antifreeze/Coolant (blue). The life expectancy of the factory-fill coolant is 105,000 miles (168,000 km) or 7 years. Mixing any other type of coolant or the use of non-distilled water will reduce the life expectancy of the factory-fill coolant. For additional information, see the "Maintenance and schedules" section of this manual.

For additional information on the location of the engine coolant reservoir, see "Engine compartment check locations" (P. 8-3).

If the cooling system frequently requires coolant, have it checked. It is recommended that you visit a NISSAN dealer for this service.

CHANGING ENGINE COOLANT

A NISSAN dealer can change the engine coolant. The service procedure can be found in the NISSAN Service Manual.

Improper servicing can result in reduced heater performance and engine overheating.

⚠ WARNING

- **To avoid the danger of being scalded, never change the coolant when the engine is hot.**
- **Never remove the radiator cap when the engine is hot. Serious burns could be caused by high pressure fluid escaping from the radiator.**
- **Avoid direct skin contact with used coolant. If skin contact is made, wash thoroughly with soap or hand cleaner as soon as possible.**
- **Keep coolant out of the reach of children and pets.**

Engine coolant must be disposed of properly. Check your local regulations.

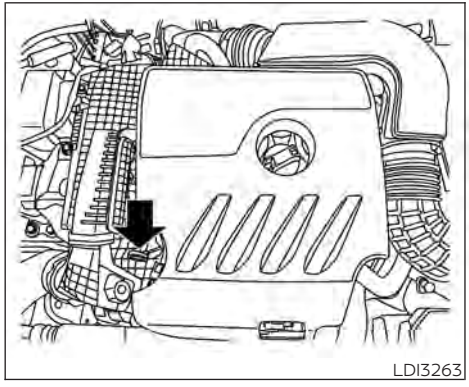

2.0L 4 cylinder (KR20DDET engine model)

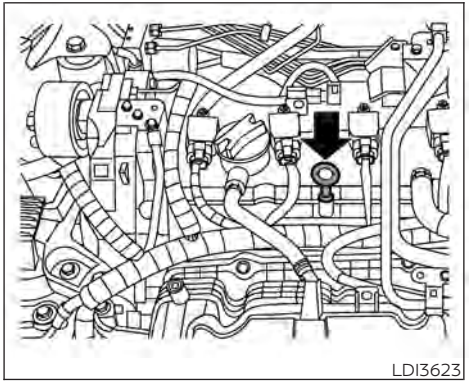

2.5L 4 cylinder (PR25DD engine model)

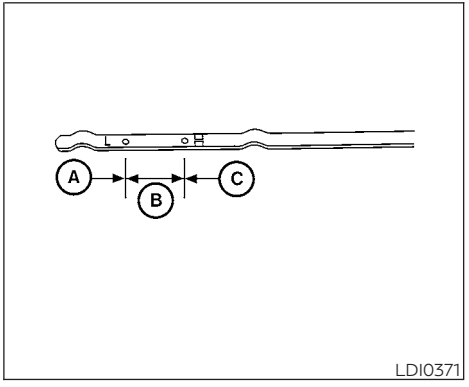

CHECKING ENGINE OIL LEVEL

1. Park the vehicle on a level surface and apply the parking brake.
2. Start the engine and let it idle until it reaches operating temperature.
3. Turn off the engine. **Wait more than 10 minutes for the oil to drain back into the oil pan.**
4. Remove the dipstick and wipe it clean. Reinsert it all the way.
5. Remove the dipstick again and check the oil level. It should be between the H (High) and L (Low) marks Ⓑ. This is the normal operating oil level range. If the oil level is below the L (Low) mark Ⓐ, remove the oil filler cap and pour recommended oil through the opening. **Do not fill oil level above H (High) mark Ⓒ.**
6. Recheck oil level with the dipstick.

It is normal to add some oil between oil maintenance intervals or during the break-in period, depending on the severity of operating conditions.

⚠ CAUTION

- **Oil level should be checked regularly. Operating the engine with an insufficient amount of oil can damage the engine, and such damage is not covered by warranty.**
- **It is normal to add some oil between oil maintenance intervals or during the break-in period, depending on the severity of operating conditions.**

CHANGING ENGINE OIL AND OIL FILTER

For additional information on engine oil and oil filter change, refer to the instructions outlined in this section.

Vehicle set-up

1. Park the vehicle on a level surface and apply the parking brake.
2. Run the engine until it reaches operating temperature.
3. Turn the engine off and wait for 15 minutes.
4. Raise and support the vehicle using a suitable floor jack and safety jack stands.
   - Place the safety jack stands under the vehicle jack-up points.
   - A suitable adapter should be attached to the jack stand saddle.

⚠ CAUTION

Make sure the correct lifting and support points are used to avoid vehicle damage.

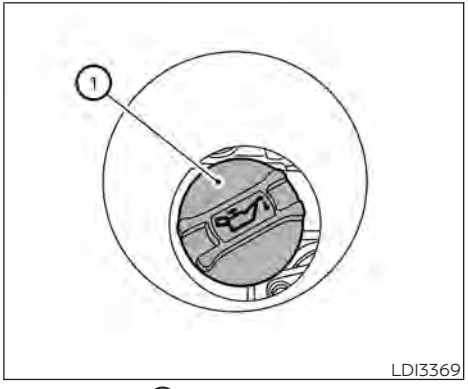

① **Oil filler cap**

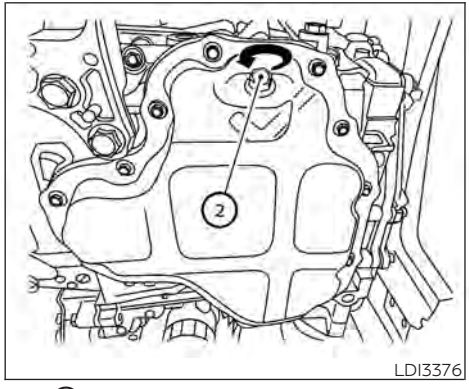

② **Oil drain plug (2.0L 4 cylinder (KR20DDET engine model))**

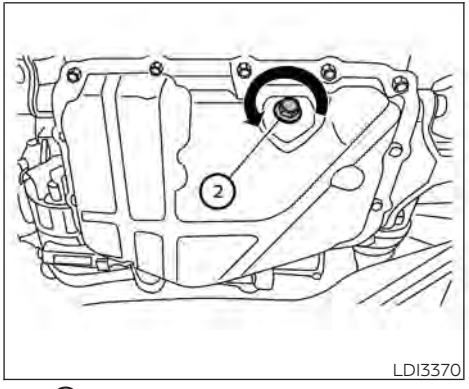

② **Oil drain plug (2.5L 4 cylinder (PR25DD engine model))**

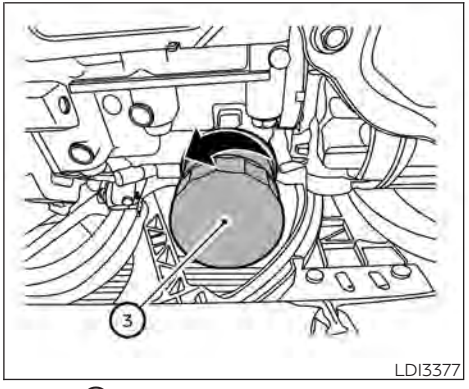

③ **Oil filter (2.0L 4 cylinder (KR20DDET engine model))**

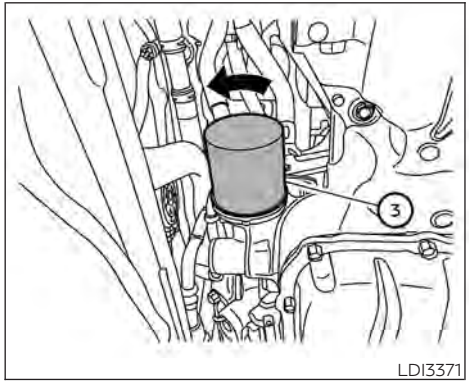

③ **Oil filter (2.5L 4 cylinder (PR25DD engine model))**

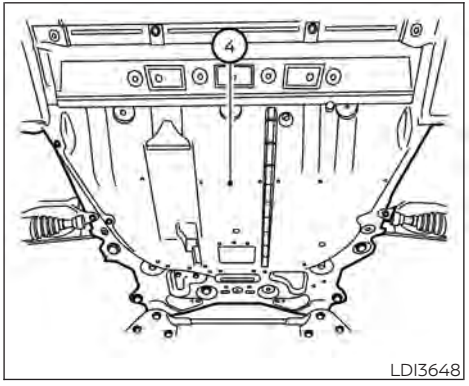

④ **Undercover**

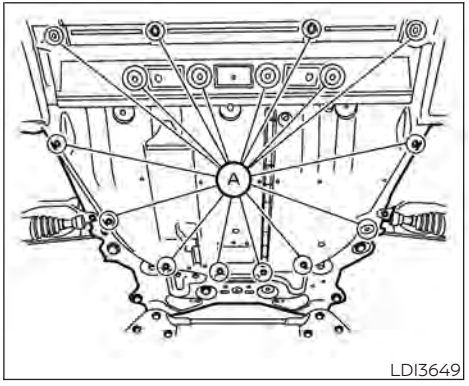

Removal of undercover

1. Remove fasteners Ⓐ and undercover.

Engine oil and filter

1. Place a large drain pan under the drain plug and oil filter.
2. Remove the oil filler cap.
3. Remove the drain plug with a wrench by turning it counterclockwise and completely drain the oil.

⚠ CAUTION

Be careful not to burn yourself, as the engine oil is hot.

⚠ WARNING

- **Prolonged and repeated contact with used engine oil may cause skin cancer.**
- **Try to avoid direct skin contact with used oil. If skin contact is made, wash thoroughly with soap or hand cleaner as soon as possible.**
- **Keep used engine oil out of reach of children.**

4. Loosen the oil filter with an oil filter wrench by turning it counterclockwise. Remove the oil filter by turning it by hand.
5. Wipe the engine oil filter mounting surface with a clean rag.

⚠ CAUTION

Be sure to remove any old gasket material remaining on the sealing surface of the engine. Failure to do so could lead to an oil leak and engine damage.

- **The dipstick must be inserted in place to prevent oil spillage from the dipstick hole when filling the engine with oil.**

6. Coat the gasket on the new filter with clean engine oil.
7. Screw in the oil filter clockwise until a slight resistance is felt, then tighten additionally more than 2/3 turn.

   Oil filter tightening torque:
   11 to 15 ft-lb (14.7 to 20.6 N·m)

8. Clean and re-install the drain plug with a new washer. Securely tighten the drain plug with a wrench. Do not use excessive force.

   Drain plug tightening torque:
   22 to 29 ft-lb (29.4 to 39.2 N·m)

9. Refill the engine with the recommended oil through the oil filler opening, and install the oil filler cap securely.

For additional information about drain and refill capacity, see "Recommended fluids/lubricants and capacities" (P. 10-2). The drain and refill capacity depends on the oil temperature and drain time. Use these specifications for reference only. Always use the dipstick to determine the proper amount of oil in the engine.

10. Start the engine and check for leakage around the drain plug and the oil filter. Correct as required. Turn the engine off and wait more than 15 minutes. Check the oil level with the dipstick. Add engine oil if necessary.

After the operation

1. Reinstall undercover in reverse order of removal.
2. Lower the vehicle carefully to the ground.
3. Reset the oil control system (if so equipped) and oil and filter maintenance reminder. For additional information, see "Vehicle information display – 5 inch (13 cm) Type A" (P. 2-18) or "Vehicle information display – 7 inch (18 cm) Type B" (P. 2-34)

- Dispose of waste oil and filter properly.
- Check your local regulations.

CONTINUOUSLY VARIABLE TRANSMISSION (CVT) FLUID

⚠ CAUTION

- **NISSAN recommends using Genuine NISSAN CVT Fluid NS-3 (or equivalent) ONLY in NISSAN CVTs. Do not mix with other fluids.**
- **Do not use Automatic Transmission Fluid (ATF) or manual transmission fluid in a NISSAN CVT, as it may damage the CVT. Damage caused by the use of fluids other than as recommended is not covered under NISSAN's New Vehicle Limited Warranty outlined in your Warranty Information Booklet.**
- **Using fluids that are not equivalent to Genuine NISSAN CVT Fluid NS-3 may also damage the CVT. Damage caused by the use of fluids other than as recommended is not covered under NISSAN's New Vehicle Limited Warranty outlined in your Warranty Information Booklet.**

When checking or replacement of CVT fluid is required, it is recommended that you visit a NISSAN dealer for this service.

BRAKE FLUID

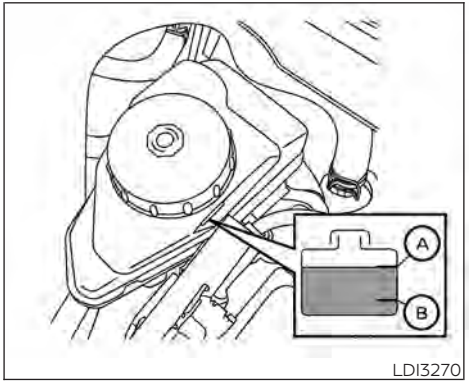

LDI3270

For additional information on brake fluid specification, see "Recommended fluids/ lubricants and capacities" (P. 10-2).

⚠ WARNING

- **Use only new fluid from a sealed container. Old, inferior or contaminated fluid may damage the brake system. The use of improper fluids can damage the brake system and affect the vehicle's stopping ability.**
- **Clean the filler cap before removing.**
- **Brake fluid is poisonous and should be stored carefully in marked containers out of reach of children.**

⚠ CAUTION

Do not spill the fluid on any painted surfaces. This will damage the paint. If fluid is spilled, immediately wash the surface with water.

Check the fluid level in the reservoir. If the brake fluid is below the MIN line Ⓑ, the brake warning light will illuminate. Add brake fluid up to the MAX line Ⓐ. For additional information on recommended type of brake fluid, see "Recommended fluids/ lubricants and capacities" (P. 10-2).

If the brake fluid must be added frequently, the brake system should be thoroughly checked. It is recommended that you visit a NISSAN dealer for this service.

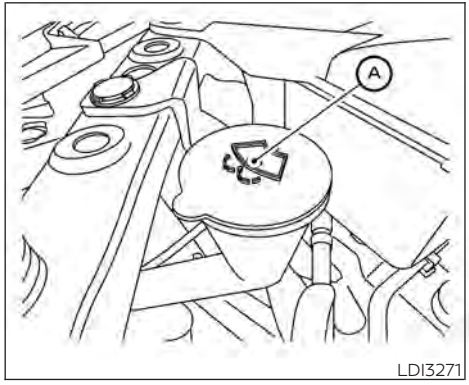

LDI3271

WINDSHIELD-WASHER FLUID RESERVOIR

Fill the windshield-washer fluid reservoir periodically. Add windshield-washer fluid when the "Low Washer Fluid" warning appears in the vehicle information display.

To check the fluid level with the dip tube, use your finger to plug the center hole Ⓐ of the cap/tube assembly, then remove it from the reservoir. If there is no fluid in the dip tube, add fluid.

To fill the windshield-washer fluid reservoir, lift the cap off the reservoir and pour the windshield-washer fluid into the reservoir opening.

Add a washer solvent to the washer for better cleaning. In the winter season, add a windshield washer antifreeze. Follow the manufacturer's instructions for the mixture ratio.

Refill the reservoir more frequently when driving conditions require an increased amount of windshield-washer fluid.

Recommended fluid is Genuine NISSAN Windshield Washer Concentrate Cleaner & Antifreeze or equivalent.

⚠WARNING

Antifreeze is poisonous and should be stored carefully in marked containers out of the reach of children.

⚠CAUTION

- **Do not substitute engine antifreeze coolant for windshield-washer fluid. This may result in damage to the paint.**
- **Do not fill the windshield-washer fluid reservoir with washer fluid concentrates at full strength. Some methyl alcohol based washer fluid concentrates may permanently stain the grille if spilled while filling the windshield-washer fluid reservoir.**
- **Pre-mix washer fluid concentrates with water to the manufacturer's recommended levels before pouring the fluid into the windshield-washer fluid reservoir. Do not use the windshield-washer fluid reservoir to mix the washer fluid concentrate and water.**

BATTERY

Caution symbols for battery			⚠ WARNING
①		No smoking, No exposed flames, No Sparks	Do not expose the battery to electrical sparks, flames or smoking. Hydrogen gas generated by the battery is explosive. Explosive gases can cause blindness or injury.
②		Shield eyes	Handle the battery cautiously. Always wear eye protection glasses to protect against explosion or battery acid.
③		Keep away from children	Never allow children to handle the battery. Keep the battery out of the reach of children.
④		Battery acid	Do not allow battery fluid to contact your skin, eyes, fabrics, or painted surfaces. Sulfuric acid can cause blindness or severe burns. After touching a battery or battery cap, do not touch or rub your eyes. Thoroughly wash your hands. If the acid contacts your eyes, skin or clothing, immediately flush with water for at least 15 minutes and seek medical attention. Battery fluid is acid. If the battery fluid gets into your eyes or onto your skin, it could cause loss of your eyesight or burns.
⑤		Note operating instructions	Before handling the battery, read this instruction carefully to ensure correct and safe handling.
⑥		Explosive gas	Hydrogen gas generated by battery fluid is explosive. Explosive gases can cause blindness or injury.

- If the battery is labeled "do not open" it is maintenance free and battery fluid should not be checked. It is recommended that you visit a NISSAN dealer or a qualified specialist workshop to confirm the battery's performance.
- Keep the battery surface clean and dry. Clean the battery with a solution of baking soda and water.
- Make certain the terminal connections are clean and securely tightened.
- If the vehicle is not to be used for 30 days or longer, disconnect the negative (-) battery terminal cable to prevent discharge.

NOTE:

Care should be taken to avoid situations that can lead to potential battery discharge and potential no-start conditions such as:

1. **Installation or extended use of electronic accessories that consume battery power when the engine is not running (Phone chargers, GPS, DVD players, etc.)**
2. **Vehicle is not driven regularly and/or only driven short distances.**

In these cases, the battery may need to be charged to maintain battery health.

⚠WARNING

- **Do not expose the battery to flames, an electrical spark or a cigarette. Hydrogen gas generated by the battery is explosive. Explosive gases can cause blindness or injury. Do not allow battery fluid to contact your skin, eyes, fabrics or painted surfaces. Sulfuric acid can cause blindness or injury. After touching a battery or battery cap, do not touch or rub your eyes. Thoroughly wash your hands. If the acid contacts your eyes, skin or clothing, immediately flush with water for at least 15 minutes and seek medical attention.**
- **When working on or near a battery, always wear suitable eye protection and remove all jewelry.**
- **Battery posts, terminals and related accessories contain lead and lead compounds. Wash hands after handling.**
- **Keep battery out of the reach of children.**
- **Do not tip the battery.**

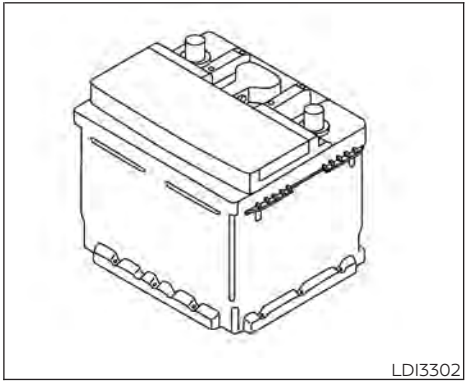

NOTE:

Do not try to open the top of the battery.

This battery is not equipped with removable vent caps.

JUMP STARTING

If jump starting is necessary, see "Jump starting" (P. 6-17). If the engine does not start by jump starting, the battery may have to be replaced. It is recommended that you visit a NISSAN dealer for this service.

VARIABLE VOLTAGE CONTROL SYSTEM

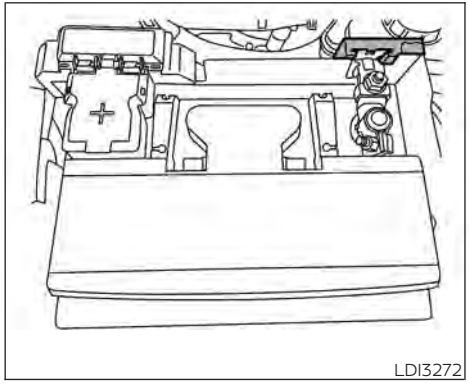

LDI3272

⚠ CAUTION

- **Do not ground accessories directly to the battery terminal. Doing so will bypass the variable voltage control system and the vehicle battery may not charge completely.**
- **Use electrical accessories with the engine running to avoid discharging the vehicle battery.**

Your vehicle is equipped with a variable voltage control system. This system measures the amount of electrical discharge from the battery and controls voltage generated by the generator.

The current sensor is located near the battery along the negative battery cable. If you add electrical accessories to your vehicle, be sure to ground them to a suitable body ground such as the frame or engine block area.

DRIVE BELT

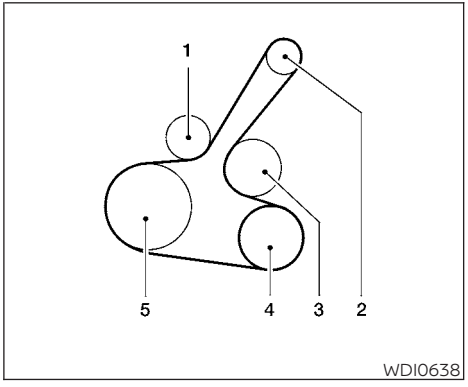

WDI0638

1. Automatic tensioner pulley
2. Generator pulley
3. Water pump pulley
4. Air conditioner compressor pulley
5. Crankshaft pulley

⚠ WARNING

Be sure the ignition switch is in the OFF or LOCK position before servicing drive belt. The engine could rotate unexpectedly.

1. Visually inspect the belt for signs of unusual wear, cuts, or fraying. If the belt is in poor condition, have it replaced. It is recommended that you visit a NISSAN dealer for this service.
2. Have the belt checked regularly for condition.

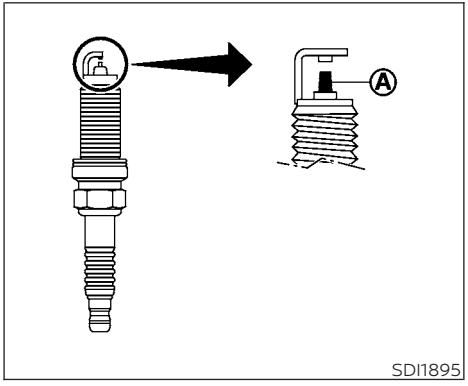

REPLACING SPARK PLUGS

Iridium-tipped spark plugs

It is not necessary to replace iridium-tipped Ⓐ spark plugs as frequently as conventional type spark plugs because they last much longer. Follow the maintenance log shown in the "Maintenance and schedules" section of this manual. Do not service iridium-tipped spark plugs by cleaning or regapping.

- **Always replace spark plugs with recommended or equivalent ones.**

⚠ WARNING

Be sure the engine and ignition switch are off and that the parking brake is engaged securely.

⚠ CAUTION

Be sure to use the correct socket to remove the spark plugs. An incorrect socket can damage the spark plugs.

If replacement is required, it is recommended that you visit a NISSAN dealer for this service.

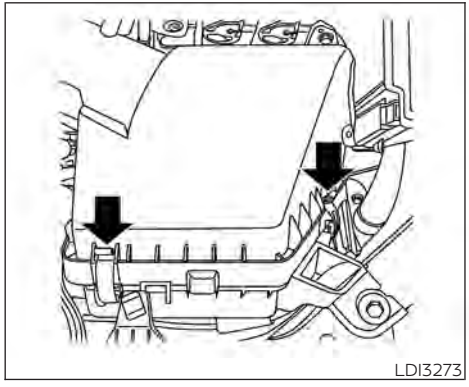

NOTE:

The air cleaner filter should not be cleaned and reused.

Replace the air cleaner filter according to the maintenance log shown in the "Maintenance and schedules" section of this manual.

To remove the air cleaner filter:

- Unlatch the clips and move the air cleaner cover upward.
- Remove the air cleaner filter.
- Wipe the inside of the air cleaner filter housing and the cover with a damp cloth.

The viscous paper type filter element (if so equipped) should not be cleaned and reused. The dry paper type filter element (if so equipped) may be cleaned and reused. Replace the air filter according to the maintenance log shown in the "Maintenance and schedules" section of this manual..

NOTE:

After installing a new air cleaner filter, make sure the air cleaner cover is seated in the housing and latch the clips.

⚠ WARNING

- **Operating the engine with the air cleaner removed can cause you or others to be burned. The air cleaner not only cleans the air, it stops the flame if the engine backfires. If it isn't there, and the engine backfires, you could be burned. Do not drive with the air cleaner removed, and be careful when working on the engine with the air cleaner removed.**
- **Never pour fuel into the throttle body or attempt to start the engine with the air cleaner removed. Doing so could result in serious injury.**

IN-CABIN MICROFILTER

The in-cabin microfilter restricts the entry of airborne dust and pollen particles and reduces some objectionable outside odors. The filter is located behind the glove box. For additional information, see the "Maintenance and schedules" section of this manual for change intervals.

If replacement is required, it is recommended that you visit a NISSAN dealer for this service.

CLEANING

If your windshield is not clear after using the windshield-washer or if a wiper blade chatters when running, wax or other material may be on the blade or windshield.

Clean the outside of the windshield with a washer fluid or a mild detergent. Your windshield is clean if beads do not form when rinsing with clear water.

Clean each blade by wiping it with a cloth soaked in a washer fluid or a mild detergent. Then rinse the blades with clear water. If your windshield is still not clear after cleaning the blades and using the wiper, install new windshield wiper blades.

⚠ CAUTION

Worn windshield wiper blades can damage the windshield and impair driver vision.

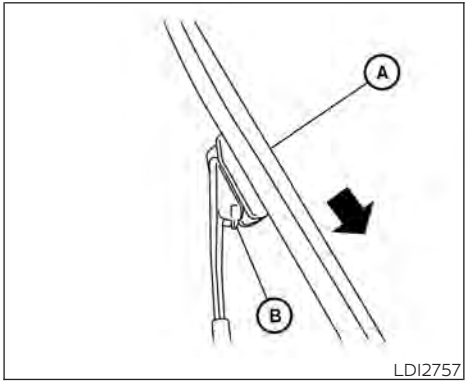

LDI2757

REPLACING

Replace the wiper blades if they are worn.

To replace the windshield wiper blades, follow the procedure below:

1. Lift the wiper arm away from the windshield.
2. Push the release tab Ⓑ.
3. Move the wiper blade Ⓐ down and remove.
4. Insert the new wiper blade onto the wiper arm until it clicks into place.
5. Push wiper on to windshield.

⚠ CAUTION

- **After wiper blade replacement, return the wiper arm to its original position; otherwise it may be damaged when the hood is opened.**
- **Make sure the wiper blades contact the glass; otherwise the arms may be damaged from wind pressure.**

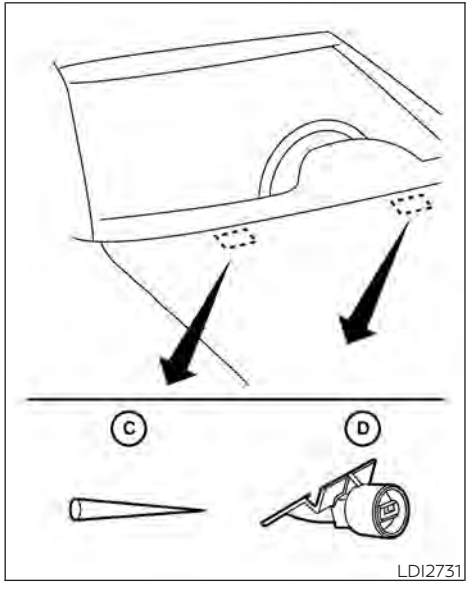

LDI2731

If you wax the surface of the hood, be careful not to let wax get into the washer nozzle Ⓓ. This may cause clogging or improper windshield-washer operation. If wax gets into the nozzle, remove it with a needle or small pin Ⓒ.

If the brakes do not operate properly, have the brakes checked. It is recommended that you visit a NISSAN dealer for this service.

Self-adjusting brakes

Your vehicle is equipped with self-adjusting brakes.

The front and rear disc-type brakes self-adjust every time the brake pedal is applied.

⚠WARNING

Have your brake system checked if the brake pedal height does not return to normal. It is recommended that you visit a NISSAN dealer for this service.

Brake pad wear indicators

The disc brake pads on your vehicle have audible wear indicators. When a brake pad requires replacement, a high pitched scraping or screeching sound will be heard when the vehicle is in motion. The noise will be heard whether or not the brake pedal is depressed. Have the brakes checked as soon as possible if the wear indicator sound is heard.

Under some driving or climate conditions, occasional brake squeak, squeal or other noise may be heard. Occasional brake noise during light to moderate stops is normal and does not affect the function or performance of the brake system.

Proper brake inspection intervals should be followed. For additional information regarding brake inspections, see the appropriate maintenance schedule information in the "Maintenance and schedules" section of this manual.

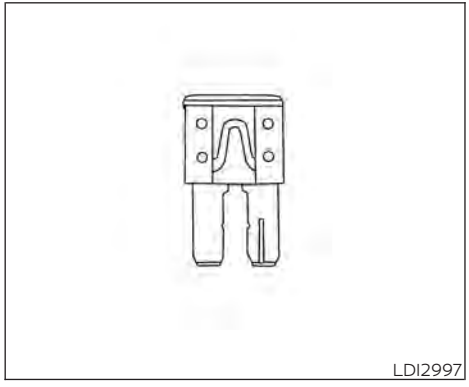
LDI2997

If any electrical equipment does not operate, check for an open fuse.

Fuses are used in the passenger and engine compartment. Spare fuses are provided and can be found in the passenger compartment fuse box.

When installing a fuse make sure the fuse is installed in the fuse box securely.

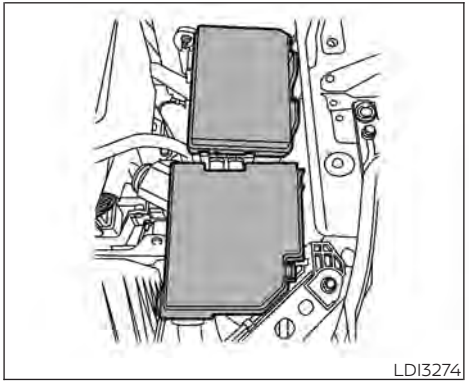
LDI3274

ENGINE COMPARTMENT

⚠WARNING

Never use a fuse of a higher or lower amperage rating than that specified on the fuse box cover. This could damage the electrical system or electronic control units or cause a fire.

If any electrical equipment does not come on, check for an open fuse.

1. Be sure the ignition switch and the headlight switch are OFF.
2. Open the engine hood.
3. Remove the fuse box cover by pushing the tab and lifting the cover up.
4. Remove the fuse with the fuse puller. The fuse puller is located in the center of the fuse block in the passenger compartment.

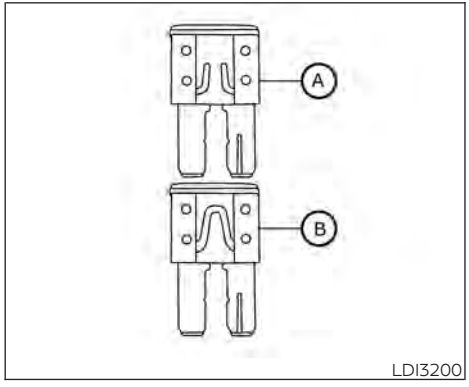

5. If the fuse is open Ⓐ, replace it with a new fuse Ⓑ.
6. If a new fuse also opens, have the electrical system checked and repaired. It is recommended that you visit a NISSAN dealer for this service.

Fusible links

If the electrical equipment does not operate and fuses are in good condition, check the fusible links. If any of these fusible links are melted, replace with only Genuine NISSAN parts.

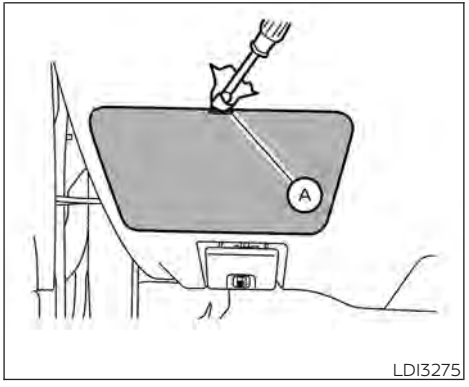

PASSENGER COMPARTMENT

⚠WARNING

Never use a fuse of higher or lower amperage rating than that specified on the fuse box cover. This could damage the electrical system or electronic control units or cause a fire.

If any electrical equipment does not operate, check for an open fuse.

1. Be sure the ignition switch and the headlight switch are in the OFF position.
2. Remove the fuse box cover Ⓐ with a suitable tool. Use a cloth to avoid damaging the trim.

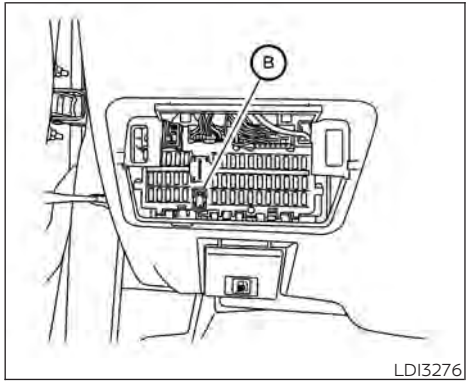

3. Remove the fuse with the fuse puller Ⓑ.

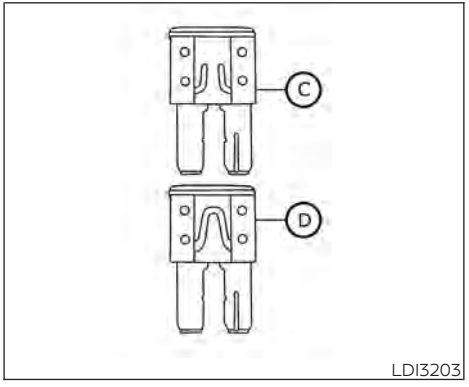

4. If the fuse is open Ⓒ, replace it with an equivalent good fuse Ⓓ.
5. Push the fuse box cover to install.
6. If a new fuse also opens, have the electrical system checked and repaired. It is recommended that you visit a NISSAN dealer for this service.

⚠ CAUTION

Be careful not to allow children to swallow the battery or removed parts.

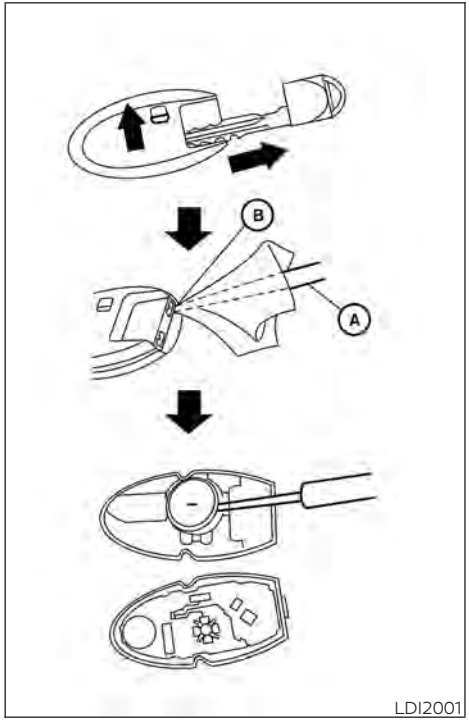

Replace the battery in the Intelligent Key as follows:

1. Remove the mechanical key from the Intelligent Key.
2. Insert a small screwdriver Ⓐ into the slit Ⓑ of the corner and twist it to separate the upper part from the lower part. Use a cloth to protect the casing.
3. Replace the battery with a new one.

   Recommended battery: CR2032 or equivalent.

   - Do not touch the internal circuit and electric terminals as doing so could cause a malfunction.
   - Hold the battery by the edges. Holding the battery across the contact points will seriously deplete the storage capacity.
   - Make sure that the + side faces the bottom of the lower part.

4. Close the lid securely as illustrated with Ⓒ and Ⓓ.
5. Operate the buttons to check the operation.

It is recommended that you visit a NISSAN dealer for this service if you need assistance for replacement.

FCC Notice:

For USA:
This device complies with Part 15 of the FCC Rules. Operation is subject to the following two conditions: (1) This device may not cause harmful interference, and (2) this device must accept any interference received, including interference that may cause undesired operation.

NOTE:
Changes or modifications not expressly approved by the party responsible for compliance could void the user's authority to operate the equipment.

For Canada:
This device contains licence-exempt transmitter(s)/receiver(s) that comply with Innovation, Science and Economic Development Canada's licence-exempt RSS(s). Operation is subject to the following two conditions: (1) This device may not cause interference. (2) This device must accept any interference, including interference that may cause undesired operation of the device.

HEADLIGHTS

For additional information on headlight bulb replacement, refer to the instructions outlined in this section.

Replacing the halogen headlight bulb (if so equipped)

The headlight is a semi-sealed beam type which uses a replaceable headlight (halogen) bulb. They can be replaced from inside the engine compartment without removing the headlight assembly.

If headlight bulb replacement is required, it is recommended that you visit a NISSAN dealer for this service.

⚠ CAUTION

- **Aiming is not necessary after replacing the bulb. When aiming adjustment is necessary, it is recommended that you visit a NISSAN dealer for this service.**
- **Do not leave the headlight assembly open without a bulb installed for a long period of time. Dust, moisture, smoke, etc. entering the headlight body may affect bulb performance. Remove the bulb from the headlight assembly just before a replacement bulb is installed.**
- **Only touch the base when handling the bulb. Never touch the glass envelope. Touching the glass could significantly affect bulb life and/or headlight performance.**
- **High pressure halogen gas is sealed inside the halogen bulb. The bulb may break if the glass envelope is scratched or the bulb is dropped.**
- **Use the same number and wattage as shown in the chart.**

Fog may temporarily form inside the lens of the exterior lights in the rain or in a car wash. A temperature difference between the inside and the outside of the lens causes the fog. This is not a malfunction. If large drops of water collect inside the lens, it is recommended that you visit a NISSAN dealer for this service.

Replacing the LED headlight bulb (if so equipped)

If LED headlight bulb replacement is required, it is recommended that you visit a NISSAN dealer for this service.

FOG LIGHTS (if so equipped)

For additional information on fog light bulb replacement, refer to the instructions outlined in this section.

Replacing the LED fog light bulb

If LED fog light bulb replacement is required, it is recommended that you visit a NISSAN dealer for this service.

EXTERIOR AND INTERIOR LIGHTS

Item	Wattage (W)	Bulb No.*
Headlight assembly (Type A) (if so equipped*)		
Low (Halogen)	55	H11
High (Halogen)	60	HB3
Side marker	5	W5W
Headlight assembly (Type B) (if so equipped)*		
Low/High	—	—
Park/Daytime running	—	—
Side marker	—	—
Fog light (if so equipped)*	—	—
Turn signal/park (if so equipped) light*	28/8	7444NA
Door mirror turn signal light (if so equipped)*	—	—
Step light (if so equipped)	3.8	194
Map light*	8	—
Vanity mirror light*	1.8	—
Courtesy light (if so equipped)*	—	—
Personal light*	8	—
Trunk light	3.4	158
High-mounted stop light*	—	—
Rear combination light*		
Stop/Tail	21/5	W21/5W
Turn	21	W21W
Side marker	5	W5W
Backup (reversing) assembly*		
Backup	16	921
Tail	5	W5W
License plate light*	—	—

* It is recommended that you visit a NISSAN dealer for replacement.

Always check with the Parts Department at a NISSAN dealer for the latest parts information.

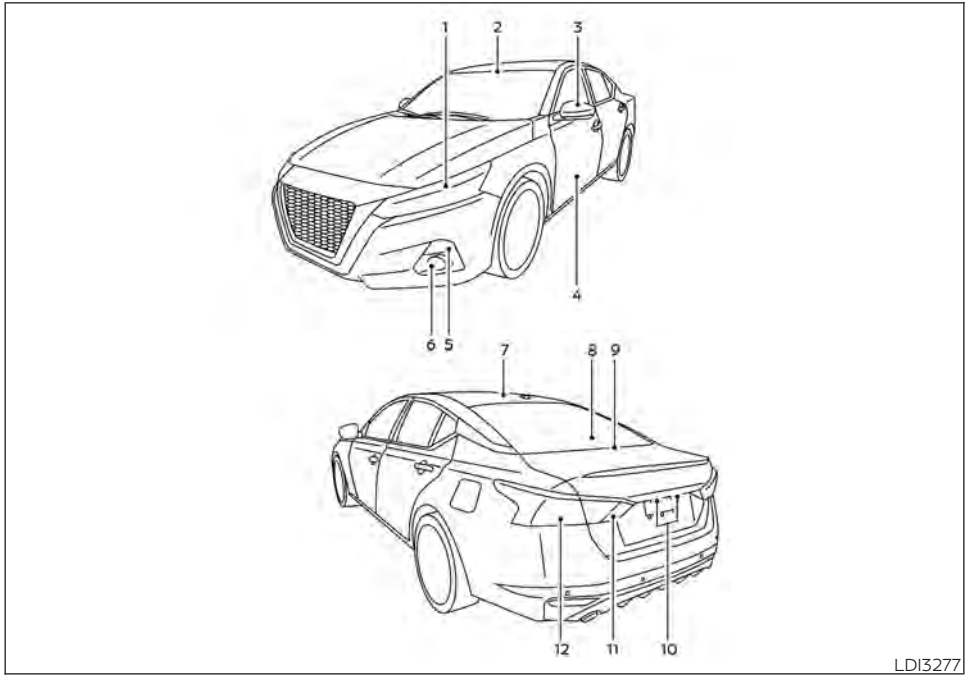

1. Headlight assembly
2. Map light
3. Door mirror turn signal light (if so equipped)
4. Step light (if so equipped)
5. Turn signal/park (if so equipped) light
6. Fog light (if so equipped)
7. Personal light
8. High-mount stop light
9. Trunk light
10. License plate light
11. Backup (reversing) assembly
12. Rear combination light

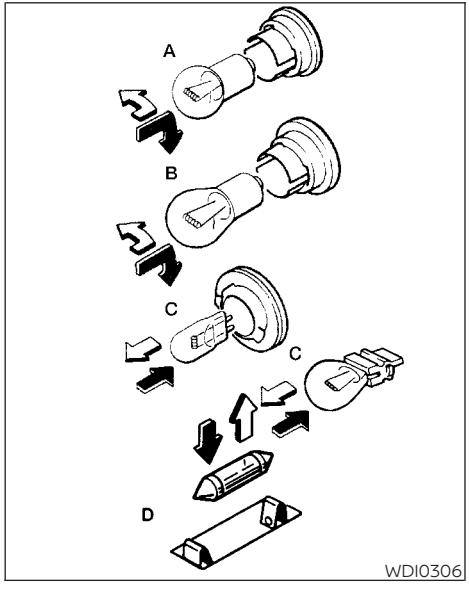

Replacement procedures

All other lights are either type A, B, C or D. When replacing a bulb, first remove the lens, light and/or cover.

⇧ Indicates bulb removal

⬆ Indicates bulb installation

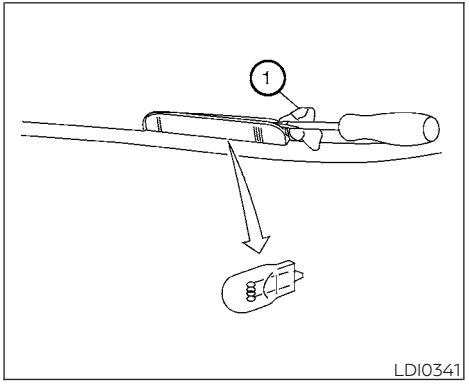

Step light (if so equipped)

Use a cloth ① to protect the housing.

Rear combination light

Bulb replacement requires the removal of the rear combination light assembly. If replacement is required, it is recommended that you visit a NISSAN dealer for this service.

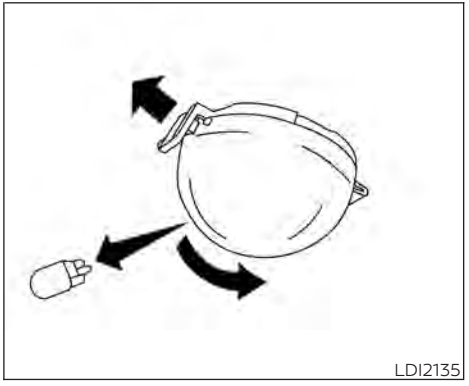

Trunk light

If you have a flat tire, see "Flat tire" (P. 6-3).

TIRE PRESSURE

Tire Pressure Monitoring System (TPMS)

⚠WARNING

Radio waves could adversely affect electric medical equipment. Those who use a pacemaker should contact the electric medical equipment manufacturer for the possible influences before use.

This vehicle is equipped with the Tire Pressure Monitoring System (TPMS). It monitors tire pressure of all tires except the spare. When the low tire pressure warning light is lit and the "Tire Pressure Low - Add Air" warning appears in the vehicle information display, one or more of your tires is significantly under-inflated.

The TPMS will activate only when the vehicle is driven at speeds above 16 mph (25 km/h). Also, this system may not detect a sudden drop in tire pressure (for example a flat tire while driving).

For additional information, see "Low tire pressure warning light" (P. 2-13), "Tire Pressure Monitoring System (TPMS)" (P. 5-5), and "Flat tire" (P. 6-3).

Tire inflation pressure

Check the tire pressures (including the spare) often and always prior to long distance trips. The recommended tire pressure specifications are shown on the F.M.V.S.S./C.M.V.S.S. certification label or the Tire and Loading Information label under the "Cold Tire Pressure" heading. The Tire and Loading Information label is affixed to the driver side center pillar. Tire pressures should be checked regularly because:

- Most tires naturally lose air over time.
- Tires can lose air suddenly when driven over potholes or other objects or if the vehicle strikes a curb while parking.

The tire pressures should be checked when the tires are cold. The tires are considered COLD after the vehicle has been parked for 3 or more hours, or driven less than 1 mile (1.6 km) at moderate speeds.

The TPMS with Easy-Fill Tire Alert provides visual and audible signals outside the vehicle for inflating the tires to the recommended COLD tire pressure. For additional information, see "TPMS with Easy-Fill Tire Alert" (P. 5-8).

If the tires are used at speeds above 100 mph (162 km/h) where it is legal to do so (on a race track for example), the cold tire inflation pressure must be increased. For additional information, see "Checking tire pressure" (P. 8-32).

Set the tire pressure to the normal cold tire inflation pressure when the vehicle speed or load is reduced.

Incorrect tire pressure, including under inflation, may adversely affect tire life and vehicle handling.

⚠WARNING

- **Improperly inflated tires can fail suddenly and cause an accident.**
- **The Gross Vehicle Weight Rating (GVWR) is located on the F.M.V.S.S./C.M.V.S.S. certification label. The vehicle weight capacity is indicated on the Tire and Loading Information label. Do not load your vehicle beyond this capacity. Overloading your vehicle may result in reduced tire life, unsafe operating conditions due to premature tire failure, or unfavorable handling characteristics and could also lead to a serious accident. Loading beyond the specified capacity may also result in failure of other vehicle components.**
- **Before taking a long trip, or whenever you heavily load your vehicle, use a tire pressure gauge to ensure that the tire pressures are at the specified level.**
- **Increase the cold tire inflation pressure as indicated in "Checking tire pressure" (P. 8-32) when using the tires specified by NISSAN above 100 mph (162 km/h) where it is legal to do so (on a race track for example). Failure to increase the cold tire inflation pressure may result in tire failure, loss of control and possible injury. After such use, readjust tire pressure.**
- **For additional information regarding tires, refer to "Important Tire Safety Information" (US) or "Tire Safety Information" (Canada) in the Warranty Information Booklet.**

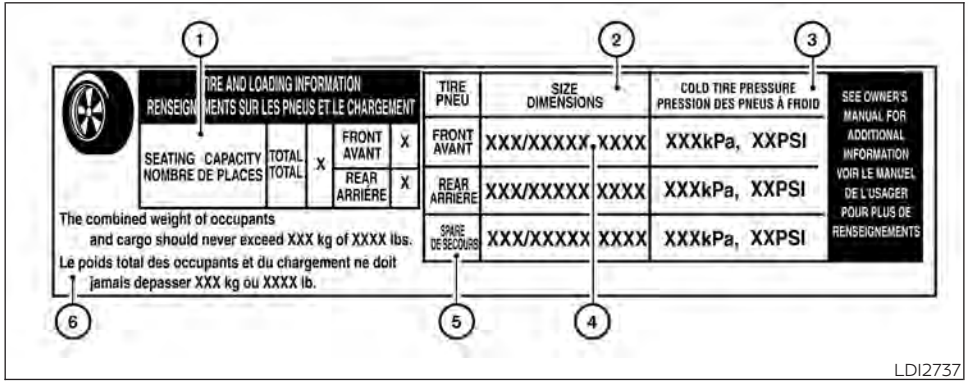

Tire and Loading Information label

① Seating capacity: The maximum number of occupants that can be seated in the vehicle.

② Tire size – see "Tire labeling" (P. 8-33).

③ Cold tire pressure: Inflate the tires to this pressure when the tires are cold. Tires are considered COLD after the vehicle has been parked for 3 or more hours, or driven less than 1 mile (1.6 km) at moderate speeds. The recommended cold tire inflation is set by the manufacturer to provide the best balance of tire wear, vehicle handling, driveability, tire noise, etc., up to the vehicle's GVWR.

④ Original tire size: The size of the tires originally installed on the vehicle at the factory.

⑤ Spare tire size.

⑥ Vehicle load limit: see "Vehicle loading information" (P. 10-16).

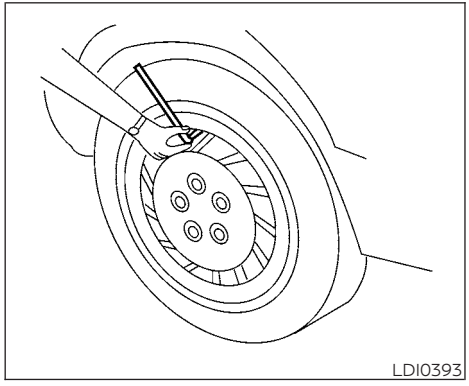

Checking tire pressure

1. Remove the valve stem cap from the tire.
2. Press the pressure gauge squarely onto the valve stem. Do not press too hard or force the valve stem sideways, or air will escape. If the hissing sound of air escaping from the tire is heard while checking the pressure, reposition the gauge to eliminate this leakage.
3. Remove the gauge.
4. Read the tire pressure on the gauge stem and compare to the specification shown on the Tire and Loading Information label.
5. Add air to the tire as needed. If too much air is added, press the core of the valve stem briefly with the tip of the gauge stem to release pressure. Recheck the pressure and add or release air as needed.
6. Install the valve stem cap.
7. Check the pressure of all other tires, including the spare.

	Size	Cold Tire Inflation Pressure
Front and Rear Original Tire	215/60R16	220 kPa, 32 PSI
	215/55R17	230 kPa, 33 PSI
	235/40R19	230 kPa, 33 PSI
Spare Tire	T135/90D16	420 kPa, 60 PSI
	T135/70D16	420 kPa, 60 PSI

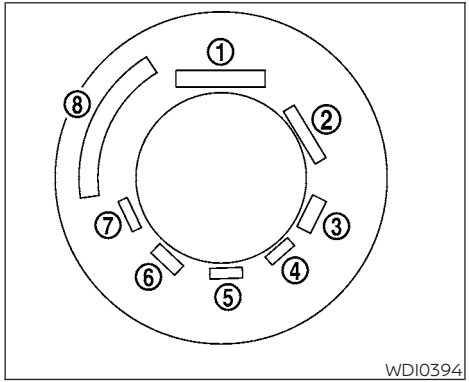

Example

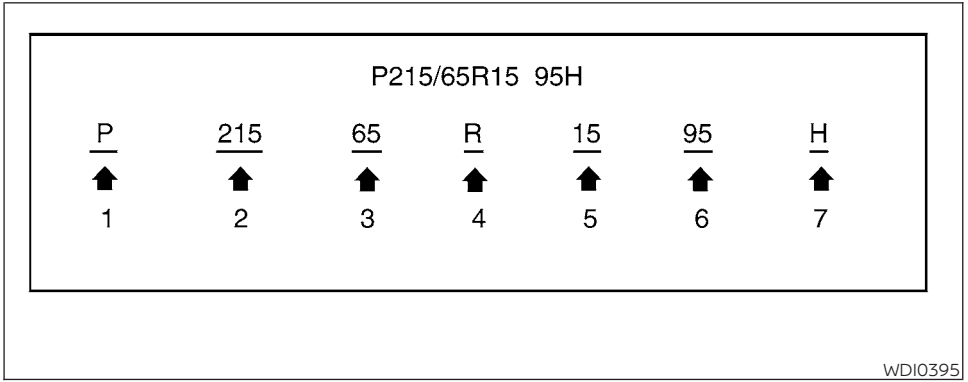

Example

TIRE LABELING

Federal law requires tire manufacturers to place standardized information on the sidewall of all tires. This information identifies and describes the fundamental characteristics of the tire and also provides the Tire Identification Number (TIN) for safety standard certification. The TIN can be used to identify the tire in case of a recall.

① Tire size (example: P215/65R15 95H)

1. P: The "P" indicates the tire is designed for passenger vehicles (not all tires have this information).
2. Three-digit number (215): This number gives the width in millimeters of the tire from sidewall edge to sidewall edge.
3. Two-digit number (65): This number, known as the aspect ratio, gives the tire's ratio of height to width.
4. R: The "R" stands for radial.
5. Two-digit number (15): This number is the wheel or rim diameter in inches.

6. Two- or three-digit number (95): This number is the tire's load index. It is a measurement of how much weight each tire can support.
7. H: Tire speed rating. You should not drive the vehicle faster than the tire speed rating.

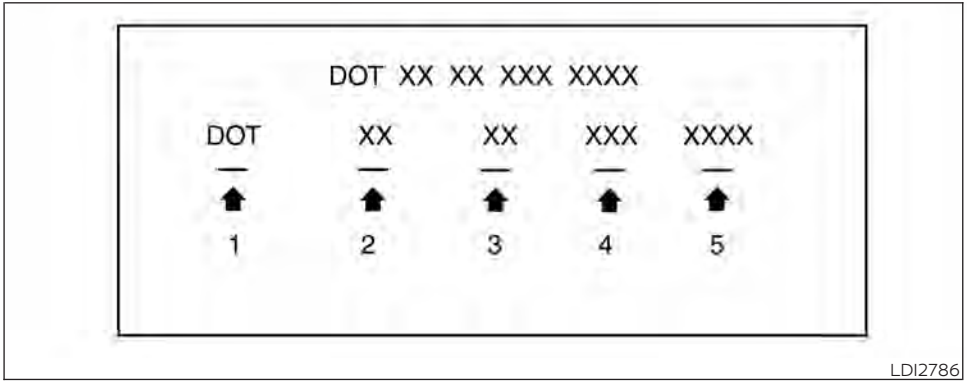

Example (Type A) (if so equipped)

② TIN (Tire Identification Number) for a new tire (example: DOT XX XX XXX XXXX)

1. DOT: Abbreviation for the "Department Of Transportation". The symbol can be placed above, below or to the left or right of the Tire Identification Number.
2. Two-digit code: Manufacturer's identification mark.
3. Two-digit code: Tire size.
4. Three-digit code: Tire type code (Optional).
5. Four numbers represent the week and year the tire was built. For example, the numbers 3103 means the 31st week of 2003. If these numbers are missing then look on the other sidewall of the tire.

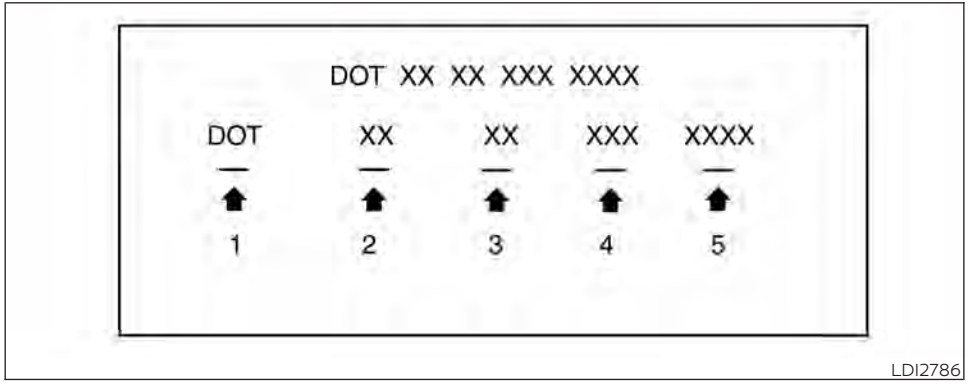

Example (Type B) (if so equipped)

② TIN (Tire Identification Number) for a new tire (example: DOT XXX XXXXXX XXXX)

1. DOT: Abbreviation for the "Department Of Transportation". The symbol can be placed above, below or to the left or right of the Tire Identification Number.
2. Three-digit code: Manufacturer's identification mark.
3. Six-digit code: Descriptive code used to identify significant characteristics of the tire.
4. Four numbers represent the week and year the tire was built. For example, the numbers 3103 means the 31st week of 2003.

③ Tire ply composition and material

The number of layers or plies of rubber-coated fabric in the tire. Tire manufacturers also must indicate the materials in the tire, which include steel, nylon, polyester and others.

④ Maximum permissible inflation pressure

This number is the greatest amount of air pressure that should be put in the tire. Do not exceed the maximum permissible inflation pressure.

⑤ Maximum load rating

This number indicates the maximum load in kilograms and pounds that can be carried by the tire. When replacing the tires on the vehicle, always use a tire that has the same load rating as the factory installed tire.

⑥ Term of "tubeless" or "tube type"

Indicates whether the tire requires an inner tube ("tube type") or not ("tubeless").

⑦ The word "radial"

The word "radial" is shown if the tire has radial structure.

⑧ Manufacturer or brand name

Manufacturer or brand name is shown.

Other Tire-related Terminology

In addition to the many terms that are defined throughout this section, Intended Outboard Sidewall is (1) the sidewall that contains a whitewall, bears white lettering or bears manufacturer, brand, and/or model name molding that is higher or deeper than the same molding on the other sidewall of the tire, or (2) the outward facing sidewall of an asymmetrical tire that has a particular side that must always face outward when mounted on a vehicle.

TYPES OF TIRES

⚠WARNING

- **When changing or replacing tires, be sure all four tires are of the same type (i.e., Summer, All Season or Snow) and construction. A NISSAN dealer may be able to help you with information about tire type, size, speed rating and availability.**
- **Replacement tires may have a lower speed rating than the factory equipped tires, and may not match the potential maximum vehicle speed. Never exceed the maximum speed rating of the tire.**
- **Replacing tires with those not originally specified by NISSAN could affect the proper operation of the low tire pressure warning system.**
- **Always use tires of the same type, size, brand, construction and tread pattern on all four wheels. Failure to do so may result in a circumference difference between tires on the front and rear axles which can cause the Vehicle Dynamic Control (VDC) system to malfunction resulting in personal injury or death, excessive tire wear and may damage the transmission and differential gears.**
- **For additional information regarding tires, refer to "Important Tire Safety Information" (US) or "Tire Safety Information" (Canada) in the Warranty Information Booklet.**

All-Wheel Drive (AWD) models

⚠WARNING

For AWD vehicles - the TEMPORARY USE ONLY spare tire must be installed to the rear wheels only. If a front tire is punctured, install the original rear tire onto the front wheel, then install the TEMPORARY USE ONLY spare tire on the rear. Failure to do so could cause overheating to the AWD system

⚠ CAUTION

- **ONLY use spare tires specified for the AWD model.**

If excessive tire wear is found, it is recommended that all four tires be replaced with tires of the same size, brand, construction and tread pattern. The tire pressure and wheel alignment should also be checked and corrected as necessary. It is recommended that you visit a NISSAN dealer for this service.

All season tires

NISSAN specifies All Season tires on some models to provide good performance all year, including snowy and icy road conditions. All Season tires are identified by ALL SEASON and/or M&S on the tire sidewall. Snow tires have better snow traction than All Season tires and may be more appropriate in some areas.

Summer tires

NISSAN specifies summer tires on some models to provide superior performance on dry roads. Summer tire performance is substantially reduced in snow and ice. Summer tires do not have the tire traction rating "M&S" on the tire sidewall.

If you plan to operate your vehicle in snowy or icy conditions, NISSAN recommends the use of SNOW tires or ALL SEASON tires on all four wheels.

Snow tires

If snow tires are needed, it is necessary to select tires equivalent in size and load rating to the original equipment tires. If you do not, it can adversely affect the safety and handling of your vehicle.

Generally, snow tires have lower speed ratings than factory equipped tires and may not match the potential maximum vehicle speed. Never exceed the maximum speed rating of the tire.

If you install snow tires, they must be the same size, brand, construction and tread pattern on all four wheels.

For additional traction on icy roads, studded tires may be used. However, some U.S. states and Canadian provinces prohibit their use. Check local, state and provincial laws before installing studded tires. Skid and traction capabilities of studded snow tires on wet or dry surfaces may be poorer than that of non-studded snow tires.

TIRE CHAINS

⚠ CAUTION

Only certain SAE class "S" tire chains can be used on this vehicle. Using the wrong Class "S" chains on this vehicle will cause damage to the vehicle. If you plan to use tire chains/cables, you should use a tire chain that meets the minimum clearances for your vehicle.

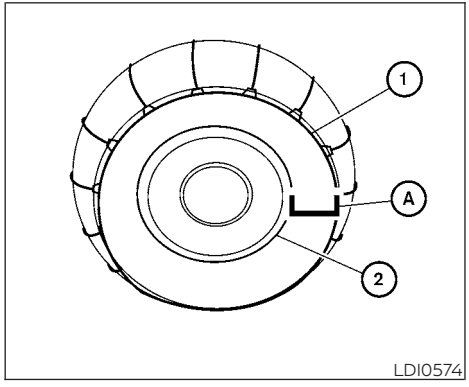

Use of tire chains may be prohibited according to location. Check the local laws before installing tire chains. When installing tire chains, make sure they are the proper size for the tires on your vehicle and are installed according to the chain manufacturer's suggestions. Use a tire chain that is designed to provide the specified space Ⓐ between the installed tire chain ① and where the tire meets the rim ② as shown on the chart.

NOTE:

Tire chains are not permitted for use with 19 in wheels.

Wheel size	Minimum space required
16 in	.7 in (17 mm)
17 in	.2 in (4 mm)

A tire chain that provides the specified amount of space will provide the necessary clearance between the tire and the closest vehicle suspension or body component. The minimum clearances are determined using the factory-equipped tires. Other types may damage your vehicle. Use chain tensioners when recommended by the tire chain manufacturer to ensure a tight fit. Loose end links of the tire chain must be secured or removed to prevent the possibility of whipping action damage to the fenders or underbody. If possible, avoid fully loading your vehicle when using tire chains. In addition, drive at a reduced speed. Otherwise, your vehicle may be damaged and/or vehicle handling and performance may be adversely affected.

Tire chains must be installed only on the front wheels and not on the rear wheels.

Never install tire chains on a TEMPORARY USE ONLY spare tire.

Do not use tire chains on dry roads. Driving with tire chains in such conditions can cause damage to the various mechanisms of the vehicle due to some overstress.

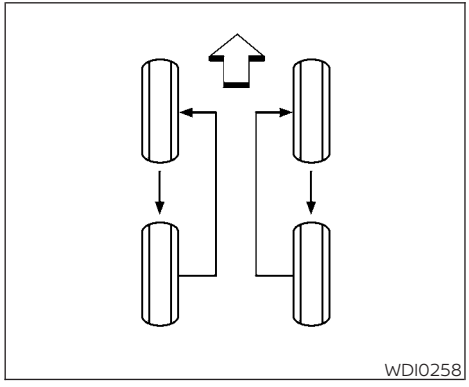

CHANGING WHEELS AND TIRES

Tire rotation

NISSAN recommends rotating the tires every 5,000 miles (8,000 km) for vehicles equipped with the 2.5L 4 cylinder (PR25DD engine model) and 7,500 miles (12,000 km) for vehicles equipped with the 2.0L 4 cylinder (KR20DDET engine model).

For additional information on tire replacing procedures, "Flat tire" (P. 6-3).

As soon as possible, tighten the wheel nuts to the specified torque with a torque wrench.

Wheel nut tightening torque:
83 ft-lb (113 N·m)

The wheel nuts must be kept tightened to specifications at all times. It is recommended that wheel nuts be tightened to specification at each tire rotation interval.

⚠WARNING

- **After rotating the tires, check and adjust the tire pressure.**
- **Retighten the wheel nuts when the vehicle has been driven for 600 miles (1,000 km) (also in cases of a flat tire, etc.).**
- **Do not include the spare tire in the tire rotation.**
- **For additional information regarding tires, refer to "Important Tire Safety Information" (US) or "Tire Safety Information" (Canada) in the Warranty Information Booklet.**

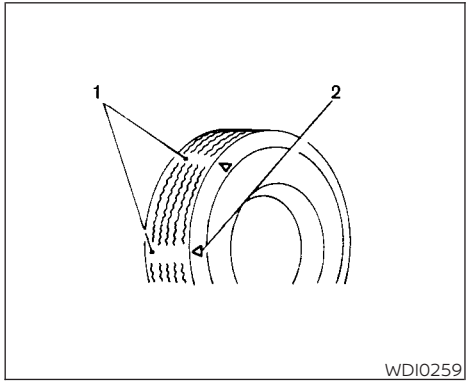

Tire wear and damage

1. Wear indicator
2. Location mark

⚠WARNING

- **Tires should be periodically inspected for wear, cracking, bulging or objects caught in the tread. If excessive wear, cracks, bulging or deep cuts are found, the tire(s) should be replaced.**
- **The original tires have built-in tread wear indicators. When the wear indicators are visible, the tire(s) should be replaced.**
- **Tires degrade with age and use. Have tires, including the spare, over 6 years old checked by a qualified technician because some tire damage may not be obvious. Replace the tires as necessary to prevent tire failure and possible personal injury.**
- **Improper service of the spare tire may result in serious personal injury. If it is necessary to repair the spare tire, it is recommended that you visit a NISSAN dealer for this service.**
- **For additional information regarding tires, refer to "Important Tire Safety Information" (US) or "Tire Safety Information" (Canada) in the Warranty Information Booklet.**

Replacing wheels and tires

When replacing a tire, use the same size, tread design, speed rating and load carrying capacity as originally equipped. For additional information, see "Wheels and tires" (P. 10-10).

⚠ WARNING

- The use of tires other than those recommended or the mixed use of tires of different brands, construction (bias, bias-belted or radial), or tread patterns can adversely affect the ride, braking, handling, Vehicle Dynamic Control (VDC) system, ground clearance, body-to-tire clearance, tire chain clearance, speedometer calibration, headlight aim and bumper height. Some of these effects may lead to accidents and could result in serious personal injury.
- If your vehicle was originally equipped with four tires that were the same size and you are only replacing two of the four tires, install the new tires on the rear axle. Placing new tires on the front axle may cause loss of vehicle control in some driving conditions and cause an accident and personal injury.
- If the wheels are changed for any reason, always replace with wheels which have the same off-set dimension. Wheels of a different off-set could cause premature tire wear, degrade vehicle handling characteristics, affect the VDC system and/or interference with the brake discs. Such interference can lead to decreased braking efficiency and/or early brake pad wear. For additional information on wheel off-set dimensions, see "Wheels and tires" (P. 10-10).
- When using a wheel without the TPMS, such as the spare tire, the TPMS will not function and the low tire pressure warning light will flash for approximately 1 minute. The light will remain on after 1 minute. Have your tires replaced and/or TPMS system reset as soon as possible. It is recommended that you visit a NISSAN dealer for this service.
- Replacing tires with those not originally specified by NISSAN could affect the proper operation of the TPMS.
- The TPMS sensor may be damaged if it is not handled correctly. Be careful when handling the TPMS sensor.
- When replacing the TPMS sensor, the ID registration may be required. It is recommended that you visit a NISSAN dealer for ID registration.
- Do not use a valve stem cap that is not specified by NISSAN. The valve stem cap may become stuck.
- Be sure that the valve stem caps are correctly fitted. Otherwise the valve may be clogged up with dirt and cause a malfunction or loss of pressure.
- Do not install a damaged or deformed wheel or tire even if it has been repaired. Such wheels or tires could have structural damage and could fail without warning.
- The use of retread tires is not recommended.
- For additional information regarding tires, refer to "Important Tire Safety Information" (US) or "Tire Safety Information" (Canada) in the Warranty Information Booklet.

Wheel balance

Unbalanced wheels may affect vehicle handling and tire life. Even with regular use, wheels can get out of balance. Therefore, they should be balanced as required.

Wheel balance service should be performed with the wheels off the vehicle. Spin balancing the wheels on the vehicle could lead to mechanical damage.

- **For additional information regarding tires, refer to "Important Tire Safety Information" (US) or "Tire Safety Information" (Canada) in the Warranty Information Booklet.**

Care of wheels

- Wash the wheels when washing the vehicle to maintain their appearance.
- Clean the inner side of the wheels when the wheel is changed or the underside of the vehicle is washed.
- Do not use abrasive cleaners when washing the wheels.
- Inspect wheel rims regularly for dents or corrosion. Such damage may cause loss of pressure or poor seal at the tire bead.
- NISSAN recommends waxing the road wheels to protect against road salt in areas where it is used during winter.

Spare tire (TEMPORARY USE ONLY spare tire) (if so equipped)

When using a wheel without the TPMS such as the spare tire, the TPMS will not function.

Observe the following precautions if the TEMPORARY USE ONLY spare tire must be used. Otherwise, your vehicle could be damaged or involved in an accident:

⚠ WARNING

- **For AWD vehicles - the TEMPORARY USE ONLY spare tire must be installed to the rear wheels only. If a front tire is punctured, install the original rear tire onto the front wheel, then install the TEMPORARY USE ONLY spare tire on the rear. Failure to do so could cause overheating to the AWD system**
- **The spare tire should be used for emergency use only. It should be replaced with the standard tire at the first opportunity to avoid possible tire or differential damage.**
- **Drive carefully while the TEMPORARY USE ONLY spare tire is installed. Avoid sharp turns and abrupt braking while driving.**
- **Periodically check spare tire inflation pressure. Always keep the pressure of the TEMPORARY USE ONLY spare tire at 420 kPa, 4.2 bar (60 psi).**
- **With the TEMPORARY USE ONLY spare tire installed do not drive the vehicle at speeds faster than 50 mph (80 km/h).**
- **When driving on roads covered with snow or ice, the TEMPORARY USE ONLY spare tire should be used on the rear wheels and the original tire used on the front wheels (drive wheels).**
- **Tire tread of the TEMPORARY USE ONLY spare tire will wear at a faster rate than the standard tire. Replace the spare tire as soon as the tread wear indicators appear.**
- **Do not use the spare tire on other vehicles.**
- **Do not use more than one spare tire at the same time.**
- **Do not tow a trailer when the TEMPORARY USE ONLY spare tire is installed.**

⚠ CAUTION

- **Do not use tire chains on a TEMPORARY USE ONLY spare tire. Tire chains will not fit properly and may cause damage to the vehicle.**
- **Because the TEMPORARY USE ONLY spare tire is smaller than the original tire, ground clearance is reduced. To avoid damage to the vehicle, do not drive over obstacles. Also, do not drive the vehicle through an automatic car wash since it may get caught.**

Emergency tire puncture repair kit (if so equipped)

The emergency tire puncture repair kit (Emergency Tire Sealant) is supplied with the vehicle instead of a spare tire. It can be used to temporarily repair minor tire punctures.

If possible, have the vehicle towed to a facility that can repair or replace the flat tire. Using the emergency tire puncture repair kit may cause a malfunction of the tire pressure sensor and cause the low tire pressure warning light to illuminate.

For additional information, see "Flat tire" (P. 6-3).

NOTE:
For models with the emergency tire puncture repair kit, a spare tire, jack and rod are not equipped as standard.

MEMO

9 Maintenance and schedules

Maintenance requirements 9-2
General maintenance 9-2
Scheduled maintenance 9-2
Where to go for service 9-2
General maintenance 9-2
Explanation of general maintenance items 9-2
Explanation of scheduled maintenance items . . . 9-5
Emission control system maintenance: 9-6
Chassis and body maintenance: 9-6
Maintenance schedules 9-7
Additional maintenance items for severe operating conditions 9-7
Oil control system (if so equipped) 9-7
2.5L 4 cylinder (PR25DD engine model) 9-9
2.0L 4 cylinder (KR20DDET engine model) 9-28

Some day-to-day and regular maintenance is essential to maintain your vehicle good mechanical condition, as well as its emissions and engine performance.

It is the owner's responsibility to make sure that the scheduled maintenance, as well as general maintenance, is performed.

As the vehicle owner, you are the only one who can ensure that your vehicle receives proper maintenance. You are a vital link in the maintenance chain.

GENERAL MAINTENANCE

General maintenance includes those items which should be checked during normal day-to-day operation. They are essential for proper vehicle operation. It is your responsibility to perform these procedures regularly as prescribed.

Performing general maintenance checks requires minimal mechanical skill and only a few general automotive tools.

These checks or inspections can be done by yourself, a qualified technician or, if you prefer, a NISSAN dealer.

SCHEDULED MAINTENANCE

The maintenance items listed in this section are required to be serviced at regular intervals. However under severe driving conditions, additional or more frequent maintenance will be required.

WHERE TO GO FOR SERVICE

If maintenance service is required or your vehicle appears to malfunction, have the systems checked and serviced. It is recommended that you visit a NISSAN dealer for this service.

NISSAN technicians are well-trained specialists and are kept up-to-date with the latest service information through technical bulletins, service tips and training programs. They are fully qualified to work on NISSAN vehicles **before** work begins.

If your vehicle is involved in a collision, it is recommended that you ask your NISSAN dealer where the nearest NISSAN Certified Collision Center is located, or go to http://collision.nissanusa.com.

You can be confident that a NISSAN dealer's service department can perform the service needed to meet the maintenance requirements on your vehicle.

During the normal day-to-day operation of the vehicle, general maintenance should be performed regularly as prescribed in this section. If you detect any unusual sounds, vibrations or smells, be sure to check for the cause or have it checked promptly. In addition, it is recommended that you visit a NISSAN dealer if you think that repairs are required.

When performing any checks or maintenance work, closely observe the "Maintenance precautions" in the "Do-it-yourself" section of this manual.

EXPLANATION OF GENERAL MAINTENANCE ITEMS

⚠ WARNING

Failure to follow the procedures listed within this section may result in personal injury.

Additional information on the following items with " * " is found in the "Do-it-yourself" section of this manual.

Outside the vehicle

The maintenance items listed here should be performed from time to time, unless otherwise specified.

Doors and engine hood: Check that the doors and engine hood operate properly. Also ensure that all latches lock securely. Lubricate hinges, latches, latch pins, rollers and links if necessary. Make sure that the secondary latch keeps the hood from opening when the primary latch is released.

When driving in areas using road salt or other corrosive materials, check lubrication frequently.

Check that the gas strays or struts properly and securely hold the hood, trunk, or rear hatch in the fully open position. If the hood, trunk, or rear hatch is not held open, have the gas stays or struts replaced.

Lights*: Clean the headlights on a regular basis. Make sure that the headlights, stop lights, tail lights, turn signal lights, and other lights are all operating properly and installed securely. Also check headlight aim.

Road wheel nuts (lug nuts)*: When checking the tires, make sure no wheel nuts are missing, and check for any loose wheel nuts. Tighten if necessary.

Tire rotation*: Rotate tires at the specified interval shown in the maintenance schedule.

Tires*: Check the pressure with a gauge often and always prior to long distance trips. If necessary, adjust the pressure in all tires, including the spare, to the pressure specified. Check carefully for damage, cuts or excessive wear.

Tire Pressure Monitoring System (TPMS) tire pressure sensor: It is recommended that you replace the TPMS tire pressure sensor assembly when the tires are replaced due to wear or age.

Wheel alignment and balance: If the vehicle should pull to either side while driving on a straight and level road, or if you detect uneven or abnormal tire wear, there may be a need for wheel alignment. If the steering wheel or seat vibrates at normal highway speeds, wheel balancing may be needed.

For additional information regarding tires, refer to "Important Tire Safety Information" (US) or "Tire Safety Information" (Canada) in the Warranty Information Booklet.

Windshield: Clean the windshield on a regular basis. Check the windshield at least every six months for cracks or other damage. Have a damaged windshield repaired by a qualified repair facility. It is recommended that you have a damaged windshield repaired by a NISSAN dealer, or a NISSAN Certified Collision Center. To locate a collision center in your area, refer to http://collision.nissanusa.com.

Windshield wiper blades*: Check for cracks or wear if they do not wipe properly.

Inside the vehicle

The maintenance items listed here should be checked on a regular basis, such as when performing scheduled maintenance, cleaning the vehicle, etc.

Accelerator pedal: Check the pedal for smooth operation and make sure the pedal does not catch or require uneven effort. Keep the floor mat away from the pedal.

Brake pedal: Check the pedal for smooth operation. If the brake pedal suddenly goes down further than normal, the pedal feels spongy or the vehicle seems to take longer to stop, have your vehicle checked immediately. It is recommended that you visit a NISSAN dealer for this service. Keep the floor mat away from the pedal.

Brakes: Check that the brakes do not pull the vehicle to one side when applied.

Continuously Variable Transmission (CVT) P (Park) position mechanism: On a fairly steep hill check that the vehicle is held securely with the shift lever in the P (Park) position without applying any brakes.

Parking brake: Check the parking brake operation regularly. The vehicle should be securely held on a fairly steep hill with only the parking brake applied. If the parking brake needs adjustment, it is recommended that you visit a NISSAN dealer for this service.

Seats: Check seat position controls such as seat adjusters, seatback recliner, etc., to ensure they operate smoothly and all latches lock securely in every position. Check that the head restraints/headrests move up and down smoothly and the locks (if so equipped) hold securely in all latched positions.

Seat belts: Check that all parts of the seat belt system (for example, buckles, anchors, adjusters and retractors) operate properly and smoothly, and are installed securely. Check the belt webbing for cuts, fraying, wear or damage.

Steering wheel: Check for changes in the steering system, such as excessive free play, hard steering or strange noises.

Warning lights and chimes: Make sure all warning lights and chimes are operating properly.

Windshield defroster: Check that the air comes out of the defroster outlets properly and in sufficient quantity when operating the heater or air conditioner.

Windshield wiper and washer*: Check that the wipers and washer operate properly and that the wipers do not streak.

Under the hood and vehicle

The maintenance items listed here should be checked periodically (for example, each time you check the engine oil or refuel).

Battery*: This vehicle is equipped with a sealed maintenance free battery. It is recommended that you visit a NISSAN dealer for service.

NOTE:

Care should be taken to avoid situations that can lead to potential battery discharge and potential no-start conditions such as:

1. **Installation or extended use of electronic accessories that consume battery power when the engine is not running (Phone chargers, GPS, DVD players, etc.).**
2. **Vehicle is not driven regularly and/or only driven short distances.**

In these cases, the battery may need to be charged to maintain battery health.

Brake fluid level*: Make sure that the brake fluid level is between the MAX and MIN lines on the reservoir.

Engine coolant level*: Check the coolant level when the engine is cold.

Engine drive belts*: Make sure the drive belts are not frayed, worn, cracked or oily.

Engine oil level*: Check the level after parking the vehicle on a level spot and turning off the engine. Wait more than 15 minutes for the oil to drain back into the oil pan.

Exhaust system: Make sure there are no loose supports, cracks or holes. If the sound of the exhaust seems unusual or there is a smell of exhaust fumes, immediately have the exhaust system inspected. It is recommended that you visit a NISSAN dealer for this service. For additional information, see "Exhaust gas (carbon monoxide)" (P. 5-4).

Fluid leaks: Check under the vehicle for fuel, oil, water or other fluid leaks after the vehicle has been parked for a while. Water dripping from the air conditioner after use is normal. If you should notice any leaks or if fuel fumes are evident, check for the cause and have it corrected immediately.

Radiator and hoses: Check the front of the radiator and clean off any dirt, insects, leaves, etc., that may have accumulated. Make sure the hoses have no cracks, deformation, rot or loose connections.

Underbody: The underbody is frequently exposed to corrosive substances such as those used on icy roads or to control dust. It is very important to remove these substances, otherwise rust may form on the floor pan, frame, fuel lines and around the exhaust system. At the end of winter, the underbody should be thoroughly flushed with plain water, being careful to clean those areas where mud and dirt may accumulate. For additional information, see the "Cleaning exterior" (P. 7-2).

Windshield-washer fluid*: Check that there is adequate fluid in the reservoir.

EXPLANATION OF SCHEDULED MAINTENANCE ITEMS

The following descriptions are provided to give you a better understanding of the scheduled maintenance items that should be regularly checked or replaced. The maintenance schedule indicates at which mileage/time intervals each item requires service.

In addition to scheduled maintenance, your vehicle requires that some items be checked during normal day-to-day operation. For additional information, see "General maintenance" (P. 9-2).

Items marked with **"*"** are recommended by NISSAN for reliable vehicle operation. You are not required to perform maintenance on these items in order to maintain the warranties which come with your NISSAN. Other maintenance items and intervals are required.

When applicable, additional information can be found in the "Do-it-yourself" section of this manual.

NOTE:

NISSAN does not advocate the use of non-OEM approved aftermarket flushing systems and strongly advises against performing these services on a NISSAN product. Many of the aftermarket flushing systems use non-OEM approved chemicals or solvents, the use of which has not been validated by NISSAN.

For recommended fuel, lubricants, fluids, grease, and refrigerant, see "Recommended fluids/lubricants and capacities" (P. 10-2).

EMISSION CONTROL SYSTEM MAINTENANCE:

Drive belts*: Check engine drive belts for wear, fraying or cracking and for proper tension. Replace any damaged drive belts.

Engine air filter: Replace at specified intervals. When driving for prolonged periods in dusty conditions, check/replace the filter more frequently.

Engine coolant*: Replace coolant at the specified interval. When adding or replacing coolant, be sure to use only Genuine NISSAN Long Life Antifreeze/Coolant (blue) or equivalent with the proper mixture. (For additional information on the proper mixture for your area, see "Engine cooling system" (P. 8-5).

NOTE: Mixing any other type of coolant or the use of non-distilled water may reduce the recommended service interval of the coolant.

Engine oil and oil filter: Replace engine oil and oil filter at the specified intervals. For recommended oil grade and viscosity see "Recommended fluids/lubricants and capacities" (P. 10-2).

Engine valve clearance*: Inspect only if valve noise increases. Adjust valve clearance if necessary.

Fuel tank vapor vent system*: Check vapor lines for leaks or looseness. Tighten connections or replace parts as necessary.

Fuel filter: Periodic maintenance is not required. (in-tank type filter)

Fuel lines/connections*: Check the fuel hoses, piping and connections for leaks, looseness, or deterioration. Tighten connections or replace parts as necessary.

Spark plugs: Replace at specified intervals. Install new plugs of the type as originally equipped.

CHASSIS AND BODY MAINTENANCE:

Brake lines and cables: Visually inspect for proper installation. Check for chafing, cracks, deterioration, and signs of leaking. Replace any deteriorated or damaged parts immediately.

Brake pads and rotors: Check for wear, deterioration and fluid leaks. Replace any deteriorated or damaged parts immediately.

Exhaust system: Visually inspect the exhaust pipes, muffler and hangers for leaks, cracks, deterioration, and damage. Tighten connections or replace parts as necessary.

Propeller shaft(s): Check for damage, looseness, and grease leakage. (AWD)

In-cabin microfilter: Replace at specified intervals. When driving for prolonged periods in dusty conditions, replace the filter more frequently.

Steering gear and linkage, axle and suspension parts, drive shaft boots: Check for damage, looseness, and leakage of oil or grease. Under severe driving conditions, inspect more frequently.

Tire rotation: Rotate tires at the specified interval shown in the maintenance schedule. When rotating tires, check for damage and uneven wear. Replace if necessary.

Transmission fluid/oil, differential oil, and transfer case oil: Visually inspect for signs of leakage at specified intervals.

Replace at specified intervals.

To help ensure smooth, safe and economical driving, NISSAN provides two maintenance schedules that may be used, depending upon the conditions in which you usually drive. These schedules contain both distance and time intervals, up to 120,000 miles (192,000 km)/144 months. For most people, the odometer reading will indicate when service is needed. However, if you drive very little, your vehicle should be serviced at the regular time intervals shown in the schedule.

After 120,000 miles (192,000 km)/144 months, continue maintenance at the same mileage/time intervals.

ADDITIONAL MAINTENANCE ITEMS FOR SEVERE OPERATING CONDITIONS

Additional maintenance items for severe operating conditions should be performed on vehicles that are driven under especially demanding conditions. Additional maintenance items should be performed if you primarily operate your vehicle under the following conditions:

- Repeated short trips of less than 5 miles (8 km).
- Repeated short trips of less than 10 miles (16 km) with outside temperatures remaining below freezing.
- Operating in hot weather in stop-and-go "rush hour" traffic.
- Extensive idling and/or low speed driving for long distances, such as police, taxi or door-to-door delivery use.
- Driving in dusty conditions.
- Driving on rough, muddy or salt spread roads.
- Using a car-top carrier.

If your vehicle is mainly operated under the severe conditions, follow the severe use maintenance intervals shown in the maintenance schedule.

OIL CONTROL SYSTEM (if so equipped)

Your vehicle is equipped with oil control system. It calculates engine oil and filter change intervals based on driving conditions. Driving in the following severe conditions will shorten the engine oil and filter change interval.

How driving conditions affect OCS display timing

2.5L 4 cylinder (PR25DD engine model):

Conditions	Driving Scene	Display timing
Light	• Freeway driving • City driving (flat/moderate hills) • No towing or heavy loads • No extended engine idling	Normal
Extreme	• Repeated short trips of less than 5 miles (8 km). • Repeated short trips of less than 10 miles (16 km) with outside temperatures remaining below freezing. • Operating in hot weather in stop-and-go "rush hour" traffic. • Extensive idling and/or low speed driving for long distances, such as police, taxi or door-to-door delivery use. • Using a car-top carrier. • Driving with frequent use of braking or in mountainous areas. • Sustained high speed driving.	Early

⚠ CAUTION

- **If the oil replacement indicator is displayed, change the engine oil within two weeks or less than 500 miles (800 km).**
- **Operating your vehicle with deteriorated oil can damage the engine.**
- **If your oil replacement indicator resets prematurely or becomes inoperative, please change the oil within six months or 5,000 miles (8,000 km) from your last oil change.**

2.0L 4 cylinder (KR20DDET engine model):

Conditions	Driving Scene	Display timing
Light	• Freeway driving • City driving (flat/moderate hills) • No towing or heavy loads • No extended engine idling	Normal
Extreme	• Repeated short trips of less than 5 miles (8 km). • Repeated short trips of less than 10 miles (16 km) with outside temperatures remaining below freezing. • Operating in hot weather in stop-and-go "rush hour" traffic. • Extensive idling and/or low speed driving for long distances, such as police, taxi or door-to-door delivery use. • Using a car-top carrier. • Driving with frequent use of braking or in mountainous areas. • Sustained high speed driving.	Early

⚠ CAUTION

- **If the oil replacement indicator is displayed, change the engine oil within two weeks or less than 500 miles (800 km).**
- **Operating your vehicle with deteriorated oil can damage the engine.**
- **If your oil replacement indicator resets prematurely or becomes inoperative, please change the oil within six months or 3,750 miles (6,000 km) from your last oil change.**

2.5L 4 CYLINDER (PR25DD engine model)

The following shows the maintenance schedule.

Choose the maintenance schedule needed based on your vehicle driving conditions.

After 120,000 miles (192,000 km)/144 months, continue maintenance at the same mileage/time interval.

5,000 miles/(8,000 km)/6 months

Perform at number of miles, kilometers or months, whichever comes first.

Standard maintenance:

Inspections:

- Horn, lights, signals, wipers, rear hatch/hood lift supports
- All fluids inspected (engine, wiper, brake, power steering, coolant)
- Engine drive belts and hose inspections
- Engine air filter
- Propeller shaft (AWD models)
- Suspension components (shocks, sub-frame, tie rods)
- Differential and fluid (AWD models)
- Battery terminals and cables, battery test
- Tire pressure, treadwear and depth

Essentials:

- Tire rotation

Severe use maintenance:

Inspections:

- Brake pads & rotors
- Exhaust system
- Propeller shaft (AWD models)
- Steering gear & linkage
- Axle & suspension parts
- Drive shaft boots

10,000 miles/(16,000 km)/ 12 months

Perform at number of miles, kilometers or months, whichever comes first.

Standard maintenance:

Inspections:

- Brake lines & cables
- Brake pads & rotors
- CVT transmission fluid
- Propeller shaft (AWD models)
- Differential gear oil (AWD models)
- Transfer case oil (AWD models)
- Drive shaft boots
- Horn, lights, signals, wipers, rear hatch/ hood lift supports
- All fluids inspected (engine, wiper, brake, power steering, coolant)
- Engine drive belts and hose inspections
- Engine air filter
- Suspension components (shocks, sub-frame, tie rods)
- Differential and fluid (AWD models)
- Battery terminals and cables, battery test
- Tire pressure, treadwear and depth
- Intelligent key battery

Essentials:

- Replace engine oil & filter (1)
- Replace in-cabin microfilter
- Tire rotation

Severe use maintenance:

Inspections:

- Brake pads & rotors
- Exhaust system
- Propeller shaft (AWD models)
- Steering gear & linkage
- Axle & suspension parts
- Drive shaft boots

Essentials:

- Replace brake fluid

(1) If the oil replacement indicator is displayed, change the engine oil and filter within two weeks or less than 500 miles (800 km).

15,000 miles/(24,000 km)/ 18 months

Perform at number of miles, kilometers or months, whichever comes first.

Standard maintenance:

Inspection:

- Intelligent key battery
- Horn, lights, signals, wipers, rear hatch/ hood lift supports
- All fluids inspected (engine, wiper, brake, power steering, coolant)
- Engine drive belts and hose inspections
- Engine air filter
- Propeller shaft (AWD models)
- Suspension components (shocks, sub-frame, tie rods)
- Differential and fluid (AWD models)
- Battery terminals and cables, battery test
- Tire pressure, treadwear and depth

Essentials:

- Tire rotation

Severe use maintenance:

Inspections:

- Brake pads & rotors
- Exhaust system
- Propeller shaft (AWD models)
- Steering gear & linkage
- Axle & suspension parts
- Drive shaft boots

20,000 miles/(32,000 km)/ 24 months

Perform at number of miles, kilometers or months, whichever comes first.

Standard maintenance:

Inspections:

- Brake lines & cables
- Brake pads & rotors
- CVT transmission fluid
- Fuel tank vapor vent system
- Fuel lines/connections
- Exhaust system
- Propeller shaft (AWD models)
- Steering gear and linkage
- Axle & suspension parts
- Differential gear oil (AWD models)
- Transfer case oil (AWD models)
- Drive shaft boots
- Horn, lights, signals, wipers, rear hatch/ hood lift supports
- All fluids inspected (engine, wiper, brake, power steering, coolant)
- Engine drive belts and hose inspections
- Engine air filter
- Suspension components (shocks, sub-frame, tie rods)
- Differential and fluid (AWD models)
- Battery terminals and cables, battery test
- Tire pressure, treadwear and depth

Essentials:

- Replace brake fluid
- Replace engine oil & filter (1)
- Replace in-cabin microfilter
- Replace intelligent key battery
- Tire rotation

Severe use maintenance:

Inspections:

- Brake pads & rotors
- Exhaust system
- Propeller shaft (AWD models)
- Steering gear & linkage
- Axle & suspension parts
- Drive shaft boots

Essentials:

- Replace brake fluid
- Replace differential gear oil (AWD models)
- Replace transfer case oil (AWD models)

(1) If the oil replacement indicator is displayed, change the engine oil and filter within two weeks or less than 500 miles (800 km).

25,000 miles/(40,000 km)/ 30 months

Perform at number of miles, kilometers or months, whichever comes first.

Standard maintenance:

Inspections:

- Horn, lights, signals, wipers, rear hatch/ hood lift supports
- All fluids inspected (engine, wiper, brake, power steering, coolant)
- Engine drive belts and hose inspections
- Engine air filter
- Propeller shaft (AWD models)
- Suspension components (shocks, sub-frame, tie rods)
- Differential and fluid (AWD models)
- Battery terminals and cables, battery test
- Tire pressure, treadwear and depth

Essentials:

- Tire rotation

Severe use maintenance:

Inspections:

- Brake pads & rotors
- Exhaust system
- Propeller shaft (AWD models)
- Steering gear & linkage
- Axle & suspension parts
- Drive shaft boots

30,000 miles/(48,000 km)/ 36 months

Perform at number of miles, kilometers or months, whichever comes first.

Standard maintenance:

Inspections:

- Brake lines & cables
- Brake pads & rotors
- CVT transmission fluid
- Propeller shaft (AWD models)
- Differential gear oil (AWD models)
- Transfer case oil (AWD models)
- Drive shaft boots
- Horn, lights, signals, wipers, rear hatch/ hood lift supports
- All fluids inspected (engine, wiper, brake, power steering, coolant)
- Engine drive belts and hose inspections
- Engine air filter
- Suspension components (shocks, sub-frame, tie rods)
- Differential and fluid (AWD models)
- Battery terminals and cables, battery test
- Tire pressure, treadwear and depth

Essentials:

- Replace engine air filter (1)
- Replace engine oil & filter (2)
- Replace in-cabin microfilter
- Replace intelligent key battery
- Tire rotation

Severe use maintenance:

Inspections:

- Brake pads & rotors
- Exhaust system
- Propeller shaft (AWD models)
- Steering gear & linkage
- Axle & suspension parts
- Drive shaft boots

Essentials:

- Replace brake fluid

(1) If operating mainly in dusty conditions, more frequent maintenance may be required.

(2) If the oil replacement indicator is displayed, change the engine oil and filter within two weeks or less than 500 miles (800 km).

35,000 miles/(56,000 km)/ 42 months

Perform at number of miles, kilometers or months, whichever comes first.

Standard maintenance:

Inspections:

- Horn, lights, signals, wipers, rear hatch/ hood lift supports
- All fluids inspected (engine, wiper, brake, power steering, coolant)
- Engine drive belts and hose inspections
- Engine air filter
- Propeller shaft (AWD models)
- Suspension components (shocks, sub-frame, tie rods)
- Differential and fluid (AWD models)
- Battery terminals and cables, battery test
- Tire pressure, treadwear and depth

Essentials:

- Tire rotation

Severe use maintenance:

Inspections:

- Brake pads & rotors
- Exhaust system
- Propeller shaft (AWD models)
- Steering gear & linkage
- Axle & suspension parts
- Drive shaft boots

40,000 miles/(64,000 km)/ 48 months

Perform at number of miles, kilometers or months, whichever comes first.

Standard maintenance:

Inspections:

- Brake lines & cables
- Brake pads & rotors
- CVT transmission fluid
- Engine drive belts
- Fuel tank vapor vent system
- Fuel lines/connections
- Exhaust system
- Propeller shaft (AWD models)
- Steering gear and linkage
- Axle & suspension part
- Differential gear oil (AWD models)
- Transfer case oil (AWD models)
- Drive shaft boots
- Horn, lights, signals, wipers, rear hatch/ hood lift supports
- All fluids inspected (engine, wiper, brake, power steering, coolant)
- Hose Inspection
- Engine air filter
- Suspension components (shocks, sub-frame, tie rods)
- Differential and fluid (AWD models)
- Battery terminals and cables, battery test
- Tire pressure, treadwear and depth

Essentials:

- Replace brake fluid
- Replace engine oil & filter (1)
- Replace in-cabin microfilter
- Replace intelligent key battery
- Tire rotation

Severe use maintenance:

Inspections:

- Brake pads & rotors
- Exhaust system
- Propeller shaft (AWD models)
- Steering gear & linkage
- Axle & suspension parts
- Drive shaft boots

Essentials:

- Replace brake fluid
- Replace differential gear oil (AWD models)
- Replace transfer case oil (AWD models)

(1) If the oil replacement indicator is displayed, change the engine oil and filter within two weeks or less than 500 miles (800 km).

45,000 miles/(72,000 km)/ 54 months

Perform at number of miles, kilometers or months, whichever comes first.

Standard maintenance:

Inspections:

- Horn, lights, signals, wipers, rear hatch/ hood lift supports
- All fluids inspected (engine, wiper, brake, power steering, coolant)
- Engine drive belts and hose inspections
- Engine air filter
- Propeller shaft (AWD models)
- Suspension components (shocks, sub-frame, tie rods)
- Differential and fluid (AWD models)
- Battery terminals and cables, battery test
- Tire pressure, treadwear and depth

Essentials:

- Tire rotation

Severe use maintenance:

Inspections:

- Brake pads & rotors
- Exhaust system
- Propeller shaft (AWD models)
- Steering gear & linkage
- Axle & suspension parts
- Drive shaft boots

50,000 miles/(80,000 km)/ 60 months

Perform at number of miles, kilometers or months, whichever comes first.

Standard maintenance:

Inspections:

- Brake lines & cables
- Brake pads & rotors
- CVT transmission fluid
- Engine drive belts
- Propeller shaft (AWD models)
- Differential gear oil (AWD models)
- Transfer case oil (AWD models)
- Drive shaft boots
- Horn, lights, signals, wipers, rear hatch/ hood lift supports
- All fluids inspected (engine, wiper, brake, power steering, coolant)
- Hose inspections
- Engine air filter
- Suspension components (shocks, sub-frame, tie rods)
- Differential and fluid (AWD models)
- Battery terminals and cables, battery test
- Tire pressure, treadwear and depth

Essentials:

- Replace engine oil & filter (1)
- Replace in-cabin microfilter
- Replace intelligent key battery
- Tire rotation

Severe use maintenance:

Inspections:

- Brake pads & rotors
- Exhaust system
- Propeller shaft (AWD models)
- Steering gear & linkage
- Axle & suspension parts
- Drive shaft boots

Essentials:

- Replace brake fluid

(1) If the oil replacement indicator is displayed, change the engine oil and filter within two weeks or less than 500 miles (800 km).

55,000 miles/(88,000 km)/ 66 months

Perform at number of miles, kilometers or months, whichever comes first.

Standard maintenance:

Inspections:

- Horn, lights, signals, wipers, rear hatch/ hood lift supports
- All fluids inspected (engine, wiper, brake, power steering, coolant)
- Engine drive belts and hose inspections
- Engine air filter
- Propeller shaft (AWD models)
- Suspension components (shocks, sub-frame, tie rods)
- Differential and fluid (AWD models)
- Battery terminals and cables, battery test
- Tire pressure, treadwear and depth

Essentials:

- Tire rotation

Severe use maintenance:

Inspections:

- Brake pads & rotors
- Exhaust system
- Propeller shaft (AWD models)
- Steering gear & linkage
- Axle & suspension parts
- Drive shaft boots

60,000 miles/(96,000 km)/ 72 months

Perform at number of miles, kilometers or months, whichever comes first.

Standard maintenance:

Inspections:

- Brake lines & cables
- Brake pads & rotors
- CVT transmission fluid
- Engine drive belts
- Fuel tank vapor vent system
- Fuel lines/connections
- Exhaust system
- Propeller shaft (AWD models)
- Steering gear and linkage
- Axle & suspension part
- Differential gear oil (AWD models)
- Transfer case oil (AWD models)
- Drive shaft boots
- Horn, lights, signals, wipers, rear hatch/ hood lift supports
- All fluids inspected (engine, wiper, brake, power steering, coolant)
- Hose inspection
- Engine air filter
- Suspension components (shocks, sub-frame, tie rods)
- Differential and fluid (AWD models)
- Battery terminals and cables, battery test
- Tire pressure, treadwear and depth

Essentials:

- Replace engine air filter (1)
- Replace brake fluid
- Replace engine oil & filter (2)
- Replace in-cabin microfilter
- Replace Intelligent key battery
- Tire rotation

Severe use maintenance:

Inspections:

- Brake pads & rotors
- Exhaust system
- Propeller shaft (AWD models)
- Axle & suspension parts
- Drive shaft boots

Essentials:

- Replace brake fluid
- Replace differential gear oil (AWD models)
- Replace transfer case oil (AWD models)
- Replace CVT transmission fluid

(1) If operating mainly in dusty conditions, more frequent maintenance may be required.

(2) If the oil replacement indicator is displayed, change the engine oil and filter within two weeks or less than 500 miles (800 km).

65,000 miles/(104,000 km)/ 78 months

Perform at number of miles, kilometers or months, whichever comes first.

Standard maintenance:

Inspections:

- Horn, lights, signals, wipers, rear hatch/ hood lift supports
- All fluids inspected (engine, wiper, brake, power steering, coolant)
- Engine drive belts and hose inspections
- Engine air filter
- Propeller shaft (AWD models)
- Suspension components (shocks, sub-frame, tie rods)
- Differential and fluid (AWD models)
- Battery terminals and cables, battery test
- Tire pressure, treadwear and depth

Essentials:

- Tire rotation

Severe use maintenance:

Inspections:

- Brake pads & rotors
- Exhaust system
- Propeller shaft (AWD models)
- Steering gear & linkage
- Axle & suspension parts
- Drive shaft boots

70,000 miles/(112,000 km)/ 84 months

Perform at number of miles, kilometers or months, whichever comes first.

Standard maintenance:

Inspections:

- Brake lines & cables
- Brake pads & rotors
- CVT transmission fluid
- Engine drive belts
- Propeller shaft (AWD models)
- Differential gear oil (AWD models)
- Transfer case oil (AWD models)
- Drive shaft boots
- Horn, lights, signals, wipers, rear hatch/ hood lift supports
- All fluids inspected (engine, wiper, brake, power steering, coolant)
- Hose inspections
- Engine air filter
- Suspension components (shocks, sub-frame, tie rods)
- Differential and fluid (AWD models)
- Battery terminals and cables, battery test
- Tire pressure, treadwear and depth

Essentials:

- Replace engine oil & filter (1)
- Replace in-cabin microfilter
- Replace intelligent key battery
- Tire rotation

Severe use maintenance:

Inspections:

- Brake pads & rotors
- Exhaust system
- Propeller shaft (AWD models)
- Steering gear & linkage
- Axle & suspension parts
- Drive shaft boots

Essentials:

- Replace brake fluid

(1) If the oil replacement indicator is displayed, change the engine oil and filter within two weeks or less than 500 miles (800 km).

75,000 miles/(120,000 km)/ 90 months

Perform at number of miles, kilometers or months, whichever comes first.

Standard maintenance:

Inspections:

- Horn, lights, signals, wipers, rear hatch/ hood lift supports
- All fluids inspected (engine, wiper, brake, power steering, coolant)
- Engine drive belts and hose inspections
- Engine air filter
- Propeller shaft (AWD models)
- Suspension components (shocks, sub-frame, tie rods)
- Differential and fluid (AWD models)
- Battery terminals and cables, battery test
- Tire pressure, treadwear and depth

Essentials:

- Tire rotation

Severe use maintenance:

Inspections:

- Brake pads & rotors
- Exhaust system
- Propeller shaft (AWD models)
- Steering gear & linkage
- Axle & suspension parts
- Drive shaft boots

80,000 miles/(128,000 km)/ 96 months

Perform at number of miles, kilometers or months, whichever comes first.

Standard maintenance:

Inspections:

- Brake lines & cables
- Brake pads & rotors
- CVT transmission fluid
- Engine drive belts
- Fuel tank vapor vent system
- Fuel lines/connections
- Exhaust system
- Propeller shaft (AWD models)
- Steering gear and linkage
- Axle & suspension part
- Differential gear oil (AWD models)
- Transfer case oil (AWD models)
- Drive shaft boots
- Horn, lights, signals, wipers, rear hatch/ hood lift supports
- All fluids inspected (engine, wiper, brake, power steering, coolant)
- Hose inspections
- Engine air filter
- Suspension components (shocks, sub-frame, tie rods)
- Differential and fluid (AWD models)
- Battery terminals and cables, battery test
- Tire pressure, treadwear and depth

Essentials:

- Replace engine oil & filter (1)
- Replace in-cabin microfilter
- Replace intelligent key battery
- Replace brake fluid
- Tire rotation

Severe use maintenance:

Inspections:

- Brake pads & rotors
- Exhaust system
- Propeller shaft (AWD models)
- Steering gear & linkage
- Axle & suspension parts
- Drive shaft boots

Essentials:

- Replace brake fluid
- Replace differential gear oil (AWD models)
- Replace transfer case oil (AWD models)

(1) If the oil replacement indicator is displayed, change the engine oil and filter within two weeks or less than 500 miles (800 km).

85,000 miles/(136,000 km)/ 102 months

Perform at number of miles, kilometers or months, whichever comes first.

Standard maintenance:

Inspections:

- Horn, lights, signals, wipers, rear hatch/ hood lift supports
- All fluids inspected (engine, wiper, brake, power steering, coolant)
- Engine drive belts and hose inspections
- Engine air filter
- Propeller shaft (AWD models)
- Suspension components (shocks, sub-frame, tie rods)
- Differential and fluid (AWD models)
- Battery terminals and cables, battery test
- Tire pressure, treadwear and depth

Essentials:

- Tire rotation

Severe use maintenance:

Inspections:

- Brake pads & rotors
- Exhaust system
- Propeller shaft (AWD models)
- Steering gear & linkage
- Axle & suspension parts
- Drive shaft boots

90,000 miles/(144,000 km)/ 108 months

Perform at number of miles, kilometers or months, whichever comes first.

Standard maintenance:

Inspections:

- Brake lines & cables
- Brake pads & rotors
- CVT transmission fluid
- Engine drive belts
- Propeller shaft (AWD models)
- Differential gear oil (AWD models)
- Transfer case oil (AWD models)
- Drive shaft boots
- Horn, lights, signals, wipers, rear hatch/ hood lift supports
- All fluids inspected (engine, wiper, brake, power steering, coolant)
- Hose inspections
- Engine air filter
- Suspension components (shocks, sub-frame, tie Rods)
- Differential and fluid (AWD models)
- Battery terminals and cables, battery test
- Tire pressure, treadwear and depth

Essentials:

- Replace engine air filter (1)
- Replace engine oil & filter (2)
- Replace in-cabin microfilter
- Replace intelligent key battery
- Tire rotation

Severe use maintenance:

Inspections:

- Brake pads & rotors
- Exhaust system
- Propeller shaft (AWD models)
- Steering gear & linkage
- Axle & suspension parts
- Drive shaft boots

Essentials:

- Replace brake fluid

(1) If operating mainly in dusty conditions, more frequent maintenance may be required.

(2) If the oil replacement indicator is displayed, change the engine oil and filter within two weeks or less than 500 miles (800 km).

95,000 miles/(152,000 km)/ 114 months

Perform at number of miles, kilometers or months, whichever comes first.

Standard maintenance:

Inspections:

- Horn, lights, signals, wipers, rear hatch/ hood lift supports
- All fluids inspected (engine, wiper, brake, power steering, coolant)
- Engine drive belts and hose inspections
- Engine air filter
- Propeller shaft (AWD models)
- Suspension components (shocks, sub-frame, tie rods)
- Differential and fluid (AWD models)
- Battery terminals and cables, battery test
- Tire pressure, treadwear and depth

Essentials:

- Tire rotation

Severe use maintenance:

Inspections:

- Brake pads & rotors
- Exhaust system
- Propeller shaft (AWD models)
- Steering gear & linkage
- Axle & suspension parts
- Drive shaft boots

100,000 miles/(160,000 km)/ 120 months

Perform at number of miles, kilometers or months, whichever comes first.

Standard maintenance:

Inspections:

- Brake lines & cables
- Brake pads & rotors
- CVT transmission fluid
- Engine drive belts
- Fuel tank vapor vent system
- Fuel lines/connections
- Exhaust system
- Propeller shaft (AWD models)
- Steering gear and linkage
- Axle & suspension part
- Differential gear oil (AWD models)
- Transfer case oil (AWD models)
- Drive shaft boots
- Horn, lights, signals, wipers, rear hatch/ hood lift supports
- All fluids inspected (engine, wiper, brake, power steering, coolant)
- Hose inspections
- Engine air filter
- Suspension components (shocks, sub-frame, tie rods)
- Differential and fluid (AWD models)
- Battery terminals and cables, battery test
- Tire pressure, treadwear and depth

Essentials:

- Replace brake fluid
- Replace engine oil & filter (1)
- Replace in-cabin microfilter
- Replace intelligent key battery
- Tire rotation

Severe use maintenance:

Inspections:

- Brake pads & rotors
- Exhaust system
- Propeller shaft (AWD models)
- Steering gear & linkage
- Axle & suspension parts
- Drive shaft boots

Essentials:

- Replace brake fluid
- Replace differential gear oil (AWD models)
- Replace transfer case oil (AWD models)

(1) If the oil replacement indicator is displayed, change the engine oil and filter within two weeks or less than 500 miles (800 km).

105,000 miles/(168,000 km)/ 126 months

Perform at number of miles, kilometers or months, whichever comes first.

Standard maintenance:

Inspections:

- Horn, lights, signals, wipers, rear hatch/ hood lift supports
- All fluids inspected (engine, wiper, brake, power steering, coolant)
- Engine drive belts and hose inspections
- Engine air filter
- Propeller shaft (AWD models)
- Suspension components (shocks, sub-frame, tie rods)
- Differential and fluid (AWD models)
- Battery terminals and cables, battery test
- Tire pressure, treadwear and depth

Essentials:

- Tire rotation
- Replace spark plugs (1) (2)
- Engine coolant * (3)

Severe use maintenance:

Inspections:

- Brake pads & rotors
- Exhaust system
- Propeller shaft (AWD models)
- Steering gear & linkage
- Axle & suspension parts
- Drive shaft boots

(1) Performed based on the number of miles only

(2) Replace spark plug when the plug gap exceeds 0.053 in (1.35 mm) even if within specified periodic replacement mileage.

(3) First replacement interval is 105,000 miles (168,000 km) or 84 months. After first replacement, replace every 75,000 miles (120,000 km) or 60 months.

* Maintenance items and intervals with " * " are recommended by NISSAN for reliable vehicle operation. The owner need not perform such maintenance in order to maintain the emission warranty or manufacturer recall liability. Other maintenance items and intervals are required.

110,000 miles/(176,000 km)/ 132 months

Perform at number of miles, kilometers or months, whichever comes first.

Standard maintenance:

Inspections:

- Brake lines & cables
- Brake pads & rotors
- CVT transmission fluid
- Engine drive belts
- Propeller shaft (AWD models)
- Differential gear oil (AWD models)
- Transfer case oil (AWD models)
- Drive shaft boots
- Horn, lights, signals, wipers, rear hatch/ hood lift supports
- All fluids inspected (engine, wiper, brake, power steering, coolant)
- Hose inspections
- Engine air filter
- Suspension components (shocks, sub-frame, tie rods)
- Differential and fluid (AWD models)
- Battery terminals and cables, battery test
- Tire pressure, treadwear and depth

Essentials:

- Replace engine oil & filter (1)
- Replace in-cabin microfilter
- Replace intelligent key battery
- Tire rotation

Severe use maintenance:

Inspections:

- Brake pads & rotors
- Exhaust system
- Propeller shaft (AWD models)
- Steering gear & linkage
- Axle & suspension parts
- Drive shaft boots

Essentials:

- Replace brake fluid

(1) If the oil replacement indicator is displayed, change the engine oil and filter within two weeks or less than 500 miles (800 km).

115,000 miles/(184,000 km)/ 138 months

Perform at number of miles, kilometers or months, whichever comes first.

Standard maintenance:

Inspections:

- Horn, lights, signals, wipers, rear hatch/ hood lift supports
- All fluids inspected (engine, wiper, brake, power steering, coolant)
- Engine drive belts and hose inspections
- Engine air filter
- Propeller shaft (AWD models)
- Suspension components (shocks, sub-frame, tie rods)
- Differential and fluid (AWD models)
- Battery terminals and cables, battery test
- Tire pressure, treadwear and depth

Essentials:

- Tire rotation

Severe use maintenance:

Inspections:

- Brake pads & rotors
- Exhaust system
- Propeller shaft (AWD models)
- Steering gear & linkage
- Axle & suspension parts
- Drive shaft boots

120,000 miles/(192,000 km)/ 144 months

Perform at number of miles, kilometers or months, whichever comes first.

Standard maintenance:

Inspections:

- Brake lines & cables
- Brake pads & rotors
- CVT transmission fluid
- Engine drive belts
- Fuel tank vapor vent system
- Fuel lines/connections
- Exhaust system
- Propeller shaft (AWD models)
- Steering gear and linkage
- Axle & suspension part
- Differential gear oil (AWD models)
- Transfer case oil (AWD models)
- Drive shaft boots
- Horn, lights, signals, wipers, rear hatch/ hood lift supports
- All fluids inspected (engine, wiper, brake, power steering, coolant)
- Hose inspections
- Engine air filter
- Suspension components (shocks, sub-frame, tie rods)
- Differential and fluid (AWD models)
- Battery terminals and cables, battery test
- Tire pressure, treadwear and depth

Essentials:

- Replace engine air filter (1)
- Replace brake fluid
- Replace engine oil & filter (2)
- Replace in-cabin microfilter
- Replace intelligent key battery
- Tire rotation

Severe use maintenance:

Inspections:

- Brake pads & rotors
- Exhaust system
- Propeller shaft (AWD models)
- Steering gear & linkage
- Axle & suspension parts
- Drive shaft boots

Essentials:

- Replace brake fluid
- Replace differential gear oil (AWD models)
- Replace transfer case oil (AWD models)
- Replace CVT transmission fluid

(1) If operating mainly in dusty conditions, more frequent maintenance may be required.

(2) If the oil replacement indicator is displayed, change the engine oil and filter within two weeks or less than 500 miles (800 km).

2.0L 4 CYLINDER (KR20DDET engine model)

The following shows the maintenance schedule.

Choose the maintenance schedule needed based on your vehicle driving conditions.

After 90,000 miles (144,000 km)/144 months, continue maintenance at the same mileage/time interval.

NOTE:

For information regarding coolant or spark plug replacement, see "Additional information" (P. 9-40).

3,750 miles/(6,000 km)/6 months

Perform at number of miles, kilometers or months, whichever comes first.

Standard maintenance:

- Not applicable. Proceed to the next interval.

Severe use maintenance:

Inspections:

- Brake pads & rotors
- Exhaust system
- Drive shaft boots
- Steering gear and linkage
- Axle & suspension parts
- Horn, lights, signals, wipers, rear hatch/hood lift supports
- All fluids inspected (engine, wiper, brake, power steering, coolant)
- Engine drive belt and hose inspections
- Engine air filter
- Suspension components (shocks, sub-frame, tie rods)
- Battery terminals and cables, battery test
- Tire pressure, treadwear and depth

7,500 miles/(12,000 km)/12 months

Perform at number of miles, kilometers or months, whichever comes first.

Standard maintenance:

Inspections:

- Brake lines & cables
- Brake pads & rotors
- CVT transmission fluid
- Drive shaft boots
- Horn, lights, signals, wipers, rear hatch/hood lift supports
- All fluids inspected (engine, wiper, brake, power steering, coolant)
- Engine drive belts and hose inspections
- Engine air filter
- Suspension components (shocks, sub-frame, tie rods)
- Battery terminals and cables, battery test
- Tire pressure, treadwear and depth
- Intelligent key battery

Essentials:

- Replace engine oil & filter (1)
- Replace in-cabin microfilter
- Tire rotation

Severe use maintenance:

Inspections:

- Brake pads & rotors
- Exhaust system
- Drive shaft boots
- Steering gear & linkage
- Axle & suspension parts

Essentials:

- Replace brake fluid

(1) If the oil replacement indicator is displayed, change the engine oil and filter within two weeks or less than 500 miles (800 km).

11,250 miles/(18,000 km)/ 18 months

Perform at number of miles, kilometers or months, whichever comes first.

Standard maintenance:

Inspections:

- Intelligent key battery
- Horn, lights, signals, wipers, rear hatch/ hood lift supports
- All fluids inspected (engine, wiper, brake, power steering, coolant)
- Engine drive belts and hose inspections
- Engine air filter
- Suspension components (shocks, subframe, tie rods)
- Battery terminals and cables, battery test
- Tire pressure, treadwear and depth

Severe use maintenance:

Inspections:

- Brake pads & rotors
- Exhaust system
- Drive shaft boots
- Steering gear & linkage
- Axle & suspension parts

15,000 miles/(24,000 km)/ 24 months

Perform at number of miles, kilometers or months, whichever comes first.

Standard maintenance:

Inspections:

- Brake lines & cables
- Brake pads & rotors
- CVT transmission fluid
- Fuel tank vapor vent system
- Fuel lines/connections
- Exhaust system
- Steering gear and linkage
- Axle & suspension parts
- Drive shaft boots
- Horn, lights, signals, wipers, rear hatch/ hood lift supports
- All fluids inspected (engine, wiper, brake, power steering, coolant)
- Engine drive belts and hose inspections
- Engine air filter
- Suspension components (shocks, subframe, tie rods)
- Battery terminals and cables, battery test
- Tire pressure, treadwear and depth

Essentials:

- Replace engine oil & filter (1)
- Replace in-cabin microfilter
- Replace intelligent key battery
- Tire rotation
- Replace brake fluid

Severe use maintenance:

Inspections:

- Brake pads & rotors
- Exhaust system
- Drive shaft boots
- Steering gear & linkage
- Axle & suspension parts

Essentials:

- Replace brake fluid

(1) If the oil replacement indicator is displayed, change the engine oil and filter within two weeks or less than 500 miles (800 km).

18,750 miles/(30,000 km)/ 30 months

Perform at number of miles, kilometers or months, whichever comes first.

Standard maintenance:

Not applicable. Proceed to next interval.

Severe use maintenance:

Inspections:

- Brake pads & rotors
- Exhaust system
- Drive shaft boots
- Steering gear & linkage
- Axle & suspension parts
- Horn, lights, signals, wipers, rear hatch/ hood lift supports
- All fluids inspected (engine, wiper, brake, power steering, coolant)
- Engine drive belt and hose inspections
- Engine air filter
- Suspension components (shocks, subframe, tie rods)
- Battery terminals and cables, battery test
- Tire pressure, treadwear and depth

22,500 miles/(36,000 km)/ 36 months

Perform at number of miles, kilometers or months, whichever comes first.

Standard maintenance:

Inspections:

- Brake lines & cables
- Brake pads & rotors
- CVT transmission fluid
- Drive shaft boots
- Horn, lights, signals, wipers, rear hatch/ hood lift supports
- All fluids inspected (engine, wiper, brake, power steering, coolant)
- Engine drive belts and hose inspections
- Engine air filter
- Suspension components (shocks, subframe, tie rods)
- Battery terminals and cables, battery test
- Tire pressure, treadwear and depth

Essentials:

- Engine oil & filter (1)
- Tire rotation
- Replace in-cabin microfilter
- Replace intelligent key battery

Severe use maintenance:

Inspections:

- Brake pads & rotors
- Exhaust system
- Drive shaft boots
- Steering gear & linkage
- Axle & suspension parts

Essentials:

- Replace brake fluid

(1) If the oil replacement indicator is displayed, change the engine oil and filter within two weeks or less than 500 miles (800 km).

26,250 miles/(42,000 km)/ 42 months

Perform at number of miles, kilometers or months, whichever comes first.

Standard maintenance:

Not applicable. Proceed to next interval.

Severe use maintenance:

Inspections:

- Brake pads & rotors
- Exhaust system
- Drive shaft boots
- Steering gear & linkage
- Axle & suspension parts
- Horn, lights, signals, wipers, rear hatch/ hood lift supports
- All fluids inspected (engine, wiper, brake, power steering, coolant)
- Engine drive belt and hose inspections
- Engine air filter
- Suspension components (shocks, subframe, tie rods)
- Battery terminals and cables, battery test
- Tire pressure, treadwear and depth

30,000 miles/(48,000 km)/ 48 months

Perform at number of miles, kilometers or months, whichever comes first.

Standard maintenance:

Inspections:

- Brake lines & cables
- Brake pads & rotors
- CVT transmission fluid
- Engine drive belts
- Fuel tank vapor vent system
- Fuel lines/connections
- Exhaust system
- Steering gear and linkage
- Axle & suspension parts
- Drive shaft boots
- Horn, lights, signals, wipers, rear hatch/ hood lift supports
- All fluids inspected (engine, wiper, brake, power steering, coolant)
- Hose inspection
- Engine air filter
- Suspension components (shocks, subframe, tie rods)
- Battery terminals and cables, battery test
- Tire pressure, treadwear and depth

Essentials:

- Replace engine oil & filter (1)
- Replace engine air filter (2)
- Replace in-cabin microfilter
- Replace intelligent key battery
- Replace brake fluid
- Tire rotation

Severe use maintenance:

Inspections:

- Brake pads & rotors
- Exhaust system
- Drive shaft boots
- Steering gear & linkage
- Axle & suspension parts

Essentials:

- Replace brake fluid

(1) If the oil replacement indicator is displayed, change the engine oil and filter within two weeks or less than 500 miles (800 km).

(2) If operating mainly in dusty conditions, more frequent maintenance may be required..

33,750 miles/(54,000 km)/ 54 months

Perform at number of miles, kilometers or months, whichever comes first.

Standard maintenance:

Inspections:

- Horn, lights, signals, wipers, rear hatch/ hood lift supports
- All fluids inspected (engine, wiper, brake, power steering, coolant)
- Engine drive belts and hose inspections
- Engine air filter
- Suspension components (shocks, sub-frame, tie rods)
- Battery terminals and cables, battery test
- Tire pressure, treadwear and depth

Severe use maintenance:

Inspections:

- Brake pads & rotors
- Exhaust system
- Drive shaft boots
- Steering gear & linkage
- Axle & suspension parts

37,500 miles/(60,000 km)/ 60 months

Perform at number of miles, kilometers or months, whichever comes first.

Standard maintenance:

Inspections:

- Brake lines & cables
- Brake pads & rotors
- CVT transmission fluid
- Engine drive belts
- Drive shaft boots
- Horn, lights, signals, wipers, rear hatch/ hood lift supports
- All fluids inspected (engine, wiper, brake, power steering, coolant)
- Hose inspections
- Engine air filter
- Suspension components (shocks, sub-frame, tie rods)
- Battery terminals and cables, battery test
- Tire pressure, treadwear and depth

Essentials:

- Replace engine oil & filter (1)
- Replace in-cabin microfilter
- Replace intelligent key battery
- Tire rotation

Severe use maintenance:

Inspections:

- Brake pads & rotors
- Exhaust system
- Drive shaft boots
- Steering gear & linkage
- Axle & suspension parts

Essentials:

- Replace brake fluid

(1) If the oil replacement indicator is displayed, change the engine oil and filter within two weeks or less than 500 miles (800 km).

41,250 miles/(66,000 km)/ 66 months

Perform at number of miles, kilometers or months, whichever comes first.

Standard maintenance:

Not applicable. Proceed to next interval.

Severe use maintenance:

Inspections:

- Brake pads & rotors
- Exhaust system
- Drive shaft boots
- Steering gear & linkage
- Axle & suspension parts
- Horn, lights, signals, wipers, rear hatch/ hood lift supports
- All fluids inspected (engine, wiper, brake, power steering, coolant)
- Engine drive belt and hose inspections
- Engine air filter
- Suspension components (shocks, subframe, tie rods)
- Battery terminals and cables, battery test
- Tire pressure, treadwear and depth

45,000 miles/(72,000 km)/ 72 months

Perform at number of miles, kilometers or months, whichever comes first.

Standard maintenance:

Inspections:

- Brake lines & cables
- Brake pads & rotors
- CVT transmission fluid
- Engine drive belts
- Fuel tank vapor vent system
- Fuel lines/connections
- Exhaust system
- Steering gear and linkage
- Axle & suspension parts
- Drive shaft boots
- Horn, lights, signals, wipers, rear hatch/ hood lift supports
- All fluids inspected (engine, wiper, brake, power steering, coolant)
- Hose inspections
- Engine air filter
- Suspension components (shocks, subframe, tie rods)
- Battery terminals and cables, battery test
- Tire pressure, treadwear and depth

Essentials:

- Replace engine oil & filter (1)
- Tire rotation
- Replace in-cabin microfilter
- Replace brake fluid
- Replace intelligent key battery

Severe use maintenance:

Inspections:

- Brake pads & rotors
- Exhaust system
- Drive shaft boots
- Steering gear & linkage
- Axle & suspension parts

Essentials:

- Replace brake fluid

(1) If the oil replacement indicator is displayed, change the engine oil and filter within two weeks or less than 500 miles (800 km).

48,750 miles/(78,000 km)/ 78 months

Perform at number of miles, kilometers or months, whichever comes first.

Standard maintenance:

Not applicable. Proceed to next interval.

Severe use maintenance:

Inspections:

- Brake pads & rotors
- Exhaust system
- Drive shaft boots
- Steering gear & linkage
- Axle & suspension parts
- Horn, lights, signals, wipers, rear hatch/ hood lift supports
- All fluids inspected (engine, wiper, brake, power steering, coolant)
- Engine drive belt and hose inspections
- Engine air filter
- Suspension components (shocks, subframe, tie rods)
- Battery terminals and cables, battery test
- Tire pressure, treadwear and depth

52,500 miles/(84,000 km)/ 84 months

Perform at number of miles, kilometers or months, whichever comes first.

Standard maintenance:

Inspections:

- Brake lines & cables
- Brake pads & rotors
- CVT transmission fluid
- Engine drive belts
- Drive shaft boots
- Horn, lights, signals, wipers, rear hatch/ hood lift supports
- All fluids inspected (engine, wiper, brake, power steering, coolant)
- Hose inspections
- Engine air filter
- Suspension components (shocks, subframe, tie rods)
- Battery terminals and cables, battery test
- Tire pressure, treadwear and depth

Essentials:

- Replace engine oil & filter (1)
- Replace in-cabin microfilter
- Replace intelligent key battery
- Tire rotation

Severe use maintenance:

Inspections:

- Brake pads & rotors
- Exhaust system
- Drive shaft boots
- Steering gear & linkage
- Axle & suspension parts

Essentials:

- Replace brake fluid

(1) If the oil replacement indicator is displayed, change the engine oil and filter within two weeks or less than 500 miles (800 km).

56,250 miles/(90,000 km)/ 90 months

Perform at number of miles, kilometers or months, whichever comes first.

Standard maintenance:

Inspections:

- Horn, lights, signals, wipers, rear hatch/ hood lift supports
- All fluids inspected (engine, wiper, brake, power steering, coolant)
- Engine drive belts and hose inspections
- Engine air filter
- Suspension components (shocks, subframe, tie rods)
- Battery terminals and cables, battery test
- Tire pressure, treadwear and depth

Severe use maintenance:

Inspections:

- Brake pads & rotors
- Exhaust system
- Drive shaft boots
- Steering gear & linkage
- Axle & suspension parts

60,000 miles/(96,000 km)/ 96 months

Perform at number of miles, kilometers or months, whichever comes first.

Standard maintenance:

Inspections:

- Brake lines & cables
- Brake pads & rotors
- CVT transmission fluid
- Engine drive belts
- Fuel tank vapor vent system
- Fuel lines/connections
- Exhaust system
- Steering gear and linkage
- Axle & suspension parts
- Drive shaft boots
- Horn, lights, signals, wipers, rear hatch/ hood lift supports
- All fluids inspected (engine, wiper, brake, power steering, coolant)
- Hose inspection
- Engine air filter
- Suspension components (shocks, subframe, tie rods)
- Battery terminals and cables, battery test
- Tire pressure, treadwear and depth

Essentials:

- Replace engine oil & filter (1)
- Replace engine air filter (2)
- Replace in-cabin microfilter
- Replace intelligent key battery
- Replace brake fluid
- Tire rotation

Severe use maintenance:

Inspections:

- Brake pads & rotors
- Exhaust system
- Drive shaft boots
- Steering gear & linkage
- Axle & suspension parts

Essentials:

- Replace brake fluid
- Replace CVT transmission fluid

(1) If the oil replacement indicator is displayed, change the engine oil and filter within two weeks or less than 500 miles (800 km).

(2) If operating mainly in dusty conditions, more frequent maintenance may be required..

63,750 miles/(102,000 km)/ 102 months

Perform at number of miles, kilometers or months, whichever comes first.

Standard maintenance:

- Not applicable. Proceed to the next interval.

Severe use maintenance:

Inspections:

- Brake pads & rotors
- Exhaust system
- Drive shaft boots
- Steering gear and linkage
- Axle & suspension parts
- Horn, lights, signals, wipers, rear hatch/ hood lift supports
- All fluids inspected (engine, wiper, brake, power steering, coolant)
- Engine drive belt and hose inspections
- Engine air filter
- Suspension components (shocks, sub-frame, tie rods)
- Battery terminals and cables, battery test
- Tire pressure, treadwear and depth

67,500 miles/(108,000 km)/ 108 months

Perform at number of miles, kilometers or months, whichever comes first.

Standard maintenance:

Inspections:

- Brake lines & cables
- Brake pads & rotors
- CVT transmission fluid
- Engine drive belts
- Drive shaft boots
- Horn, lights, signals, wipers, rear hatch/ hood lift supports
- All fluids inspected (engine, wiper, brake, power steering, coolant)
- Hose inspections
- Engine air filter
- Suspension components (shocks, sub-frame, tie rods)
- Battery terminals and cables, battery test
- Tire pressure, treadwear and depth

Essentials:

- Replace engine oil & filter (1)
- Tire rotation
- Replace in-cabin microfilter
- Replace intelligent key battery

Severe use maintenance:

Inspections:

- Brake pads & rotors
- Exhaust system
- Drive shaft boots
- Steering gear & linkage
- Axle & suspension parts

Essentials:

- Replace brake fluid

(1) If the oil replacement indicator is displayed, change the engine oil and filter within two weeks or less than 500 miles (800 km).

71,250 miles/(114,000 km)/ 114 months

Perform at number of miles, kilometers or months, whichever comes first.

Standard maintenance:

- Not applicable. Proceed to the next interval.

Severe use maintenance:

Inspections:

- Brake pads & rotors
- Exhaust system
- Drive shaft boots
- Steering gear and linkage
- Axle & suspension parts
- Horn, lights, signals, wipers, rear hatch/ hood lift supports
- All fluids inspected (engine, wiper, brake, power steering, coolant)
- Engine drive belt and hose inspections
- Engine air filter
- Suspension components (shocks, subframe, tie rods)
- Battery terminals and cables, battery test
- Tire pressure, treadwear and depth

75,000 miles/(120,000 km)/ 120 months

Perform at number of miles, kilometers or months, whichever comes first.

Standard maintenance:

Inspections:

- Brake lines & cables
- Brake pads & rotors
- CVT transmission fluid
- Engine drive belts
- Fuel tank vapor vent system
- Fuel lines/connections
- Exhaust system
- Steering gear and linkage
- Axle & suspension parts
- Drive shaft boots
- Horn, lights, signals, wipers, rear hatch/ hood lift supports
- All fluids inspected (engine, wiper, brake, power steering, coolant)
- Hose inspections
- Engine air filter
- Suspension components (shocks, subframe, tie rods)
- Battery terminals and cables, battery test
- Tire pressure, treadwear and depth

Essentials:

- Replace engine oil & filter (1)
- Replace in-cabin microfilter
- Replace intelligent key battery
- Tire rotation
- Replace brake fluid

Severe use maintenance:

Inspections:

- Brake pads & rotors
- Exhaust system
- Drive shaft boots
- Steering gear & linkage
- Axle & suspension parts

Essentials:

- Replace brake fluid

(1) If the oil replacement indicator is displayed, change the engine oil and filter within two weeks or less than 500 miles (800 km).

78,750 miles/(126,000 km)/ 126 months

Perform at number of miles, kilometers or months, whichever comes first.

Standard maintenance:

Inspections:

- Horn, lights, signals, wipers, rear hatch/ hood lift supports
- All fluids inspected (engine, wiper, brake, power steering, coolant)
- Engine drive belts and hose inspections
- Engine air filter
- Suspension components (shocks, sub-frame, tie rods)
- Battery terminals and cables, battery test
- Tire pressure, treadwear and depth

Severe use maintenance:

Inspections:

- Brake pads & rotors
- Exhaust system
- Drive shaft boots
- Steering gear & linkage
- Axle & suspension parts

82,500 miles/(132,000 km)/ 132 months

Perform at number of miles, kilometers or months, whichever comes first.

Standard maintenance:

Inspections:

- Brake lines & cables
- Brake pads & rotors
- CVT transmission fluid
- Engine drive belts
- Drive shaft boots
- Horn, lights, signals, wipers, rear hatch/ hood lift supports
- All fluids inspected (engine, wiper, brake, power steering, coolant)
- Hose inspections
- Engine air filter
- Suspension components (shocks, sub-frame, tie rods)
- Battery terminals and cables, battery test
- Tire pressure, treadwear and depth

Essentials:

- Replace engine oil & filter (1)
- Replace in-cabin microfilter
- Replace intelligent key battery
- Tire rotation

Severe use maintenance:

Inspections:

- Brake pads & rotors
- Exhaust system
- Drive shaft boots
- Steering gear & linkage
- Axle & suspension parts

Essentials:

- Replace brake fluid

(1) If the oil replacement indicator is displayed, change the engine oil and filter within two weeks or less than 500 miles (800 km).

86,250 miles/(138,000 km)/ 138 months

Perform at number of miles, kilometers or months, whichever comes first.

Standard maintenance:

Not applicable. Proceed to next interval.

Severe use maintenance:

Inspections:

- Brake pads & rotors
- Exhaust system
- Drive shaft boots
- Steering gear & linkage
- Axle & suspension parts
- Horn, lights, signals, wipers, rear hatch/ hood lift supports
- All fluids inspected (engine, wiper, brake, power steering, coolant)
- Engine drive belt and hose inspections
- Engine air filter
- Suspension components (shocks, subframe, tie rods)
- Battery terminals and cables, battery test
- Tire pressure, treadwear and depth

90,000 miles/(144,000 km)/ 144 months

Perform at number of miles, kilometers or months, whichever comes first.

Standard maintenance:

Inspections:

- Brake lines & cables
- Brake pads & rotors
- CVT transmission fluid
- Engine drive belts
- Fuel tank vapor vent system
- Fuel lines/connections
- Steering gear and linkage
- Axle & suspension parts
- Drive shaft boots
- Exhaust system
- Horn, lights, signals, wipers, rear hatch/ hood lift supports
- All fluids inspected (engine, wiper, brake, power steering, coolant)
- Hose inspections
- Engine air filter
- Suspension components (shocks, subframe, tie rods)
- Battery terminals and cables, battery test
- Tire pressure, treadwear and depth

Essentials:

- Replace engine oil & filter (1)
- Replace engine air filter (2)
- Replace brake fluid
- Replace in-cabin microfilter
- Replace intelligent key battery
- Tire rotation

Severe use maintenance:

Inspections:

- Brake pads & rotors
- Exhaust system
- Drive shaft boots
- Steering gear & linkage
- Axle & suspension parts

Essentials:

- Replace brake fluid

(1) If the oil replacement indicator is displayed, change the engine oil and filter within two weeks or less than 500 miles (800 km).

(2) If operating mainly in dusty conditions, more frequent maintenance may be required.

Additional information

NOTE FOR ENGINE COOLANT *:
(1) First replacement interval is 105,000 miles (168,000 km) or 84 months. After first replacement, replace every 75,000 miles (120,000 km) or 60 months. * Maintenance items and intervals with "*" are recommended by NISSAN for reliable vehicle operation. The owner need not perform such maintenance in order to maintain the emission warranty or manufacturer recall liability. Other maintenance items and intervals are required.
NOTE FOR SPARK PLUGS:
(1) Replace every 105,000 miles (168,000 km) (2) Replace spark plug when the plug gap exceeds 0.049 in (1.25 mm) even if within specified periodic replacement mileage.

10 Technical and consumer information

Recommended fluids/lubricants and capacities . . . 10-2
Fuel recommendation . . . 10-4
Engine oil and oil filter recommendations . . . 10-7
Air conditioner system refrigerant and oil recommendations . . . 10-8
Specifications . . . 10-9
Engine . . . 10-9
Wheels and tires . . . 10-10
Dimensions and weights . . . 10-11
When traveling or registering in another country . . . 10-12
Vehicle identification . . . 10-12
Vehicle Identification Number (VIN) plate . . . 10-12
Vehicle identification number (chassis number) . . . 10-12
Engine serial number . . . 10-13
F.M.V.S.S./C.M.V.S.S. certification label . . . 10-13
Emission control information label . . . 10-14
Tire and Loading Information label . . . 10-14
Air conditioner specification label . . . 10-14
Installing front license plate . . . 10-15
Vehicle loading information . . . 10-16
Terms . . . 10-16
Vehicle load capacity . . . 10-17
Loading tips . . . 10-19
Measurement of weights . . . 10-20
Towing a trailer . . . 10-20
Flat towing . . . 10-20
Uniform tire quality grading . . . 10-21
Emission control system warranty . . . 10-22
Reporting safety defects . . . 10-22
Readiness for Inspection/Maintenance (I/M) test . . . 10-24
Event Data Recorders (EDR) . . . 10-24
Additional data recording (on vehicles equipped with optional ProPILOT Assist) . . . 10-25
Owner's Manual/Service Manual order information . . . 10-26

RECOMMENDED FLUIDS/ LUBRICANTS AND CAPACITIES

The following are approximate capacities. The actual refill capacities may be slightly different. When refilling, follow the procedure described in the "Do-it-yourself" section to determine the proper refill capacity.

Fluid type			Capacity (approximate)			Recommended Fluids/Lubricants
			Metric Measure	US Measure	Imperial Measure	
Fuel		FWD:	61.3 L	16 1/4 gal	13 1/2 gal	• For additional information, see "Fuel recommendation" (P. 10-4).
		AWD:	60.6 L	16 gal	13 3/8 gal	
Engine oil*1 Drain and refill *1: For additional information, see "Engine oil" (P. 8-7).	2.5L 4 cylinder (PR25DD engine model)	With oil filter change	5.1 L	5-3/8 qt	4-1/2 qt	• Genuine "NISSAN Motor Oil 0W-20 SP" (or equivalent) is recommended. • If the above motor oil (or engine oil) is not available, a synthetic 0W-20 GF-6 SP motor oil (or engine oil) may be used. Damage caused by the use of motor oil (or engine oil) other than as recommended is not covered under NISSAN's New Vehicle Limited Warranty. For additional information, see "Engine oil and oil filter recommendations" (P. 10-7).
		Without oil filter change	4.8 L	5-1/8 qt	4-1/4 qt	
	2.0L 4 cylinder (KR20DDET engine model)	With oil filter change	4.7 L	5 qt	4-1/8 qt	• Genuine "NISSAN Motor Oil Ester 5W-30 SP" (or equivalent) is recommended. • If the above motor oil (or engine oil) is not available, a synthetic SAE 5W-30 GF-6 SP motor oil (or engine oil) may be used. Damage caused by the use of motor oil (or engine oil) other then as recommended is not covered under NISSAN's New Vehicle Limited Warranty. For additional information, see "Engine oil and oil filter recommendations" (P. 10-7).
		Without oil filter change	4.6 L	4-7/8 qt	4 qt	
Engine coolant with reservoir	2.5L 4 cylinder (PR25DD engine model)		8.3 L	2-1/4 gal	1-7/8 gal	• Pre-diluted Genuine NISSAN Long Life Antifreeze/Coolant (blue) or equivalent
	2.0L 4 cylinder (KR20DDET engine model)		8.2 L	2-1/8 gal	1-3/4 gal	

Fluid type	Capacity (approximate)			Recommended Fluids/Lubricants
	Metric Measure	US Measure	Imperial Measure	
Continuously Variable Transmission (CVT) fluid	—	—	—	• Genuine NISSAN CVT Fluid NS-3 • NISSAN recommends using Genuine NISSAN CVT Fluid NS-3 (or equivalent) ONLY in NISSAN CVTs. Do not mix with other fluids. Using fluids that are not equivalent to Genuine NISSAN CVT Fluid NS-3 may damage the CVT. Damage caused by the use of fluids other than as recommended is not covered under NISSAN's New Vehicle Limited Warranty outlined in your Warranty Information Booklet.
Differential gear oil	—	—	—	• Genuine NISSAN Differential Oil Hypoid Super GL-5 80W-90 or equivalent conventional (non-synthetic) oil.
Transfer oil	—	—	—	
Brake fluid	Refill to the proper level according to the instructions, see "Brake fluid" (P. 8-12).			• Genuine NISSAN Super Heavy Duty Brake Fluid* or equivalent DOT 3 *: Available in mainland U.S.A through a NISSAN dealer
Multi-purpose grease	—	—	—	• NLGI No. 2 (Lithium Soap base)
Air conditioning system refrigerant	—	—	—	• HF0-1234yf (R-1234yf) • For additional information, see "Air conditioner system refrigerant and oil recommendations" (P. 10-8).
Air conditioning system oil	—	—	—	• Genuine NISSAN A/C System Oil Type PAG (VC100YF oil) or equivalent • For additional information, see "Air conditioner system refrigerant and oil recommendations" (P. 10-8).
Windshield-washer fluid	3.8 L	1 gal	7/8 gal	• Genuine NISSAN Windshield Washer Concentrate Cleaner & Antifreeze fluid or equivalent.

FUEL RECOMMENDATION

Use unleaded regular gasoline with an octane rating of at least 87 AKI (Anti-Knock Index) number (Research octane number 91).

⚠ CAUTION

- **Only vehicles with the E-85 filler door label can operate on E-85. Fuel system or other damage can occur if E-85 is used in vehicles that are not designed to run on E-85.**
- **Using a fuel other than that specified could adversely affect the emission control system, and may also affect the warranty coverage.**
- **Under no circumstances should a leaded gasoline be used, because this will damage the three-way catalyst.**
- **Do not use a fuel containing more than 15% ethanol in your vehicle. Your vehicle is not designed to run on a fuel containing more than 15% ethanol. Using a fuel containing more than 15% ethanol in a vehicle not specifically designed for a fuel containing more than 15% ethanol can adversely affect the emission control devices and systems of the vehicle. Damage caused by such fuel is not covered by the NISSAN New Vehicle Limited Warranty.**
- **Do not use fuel that contains the octane booster methylcyclopentadienyl manganese tricarbonyl (MMT). Using fuel containing MMT may adversely affect vehicle performance and vehicle emissions. Not all fuel dispensers are labeled to indicate MMT content, so you may have to consult your gasoline retailer for more details. Note that Federal and California laws prohibit the use of MMT in reformulated gasoline.**
- **U.S. government regulations require ethanol dispensing pumps to be identified by a small, square, orange and black label with the common abbreviation or the appropriate percentage for that region.**

Gasoline specifications

NISSAN recommends using gasoline that meets the World-Wide Fuel Charter (WWFC) specifications where it is available. Many of the automobile manufacturers developed this specification to improve emission control system and vehicle performance. Ask your service station manager if the gasoline meets the WWFC specifications.

Reformulated gasoline

Some fuel suppliers are now producing reformulated gasolines. These gasolines are specially designed to reduce vehicle emissions. NISSAN supports efforts towards cleaner air and suggests that you use reformulated gasoline when available.

Gasoline containing oxygenates

Some fuel suppliers sell gasoline containing oxygenates such as ethanol, Methyl Tert-butyl Ether (MTBE) and methanol with or without advertising their presence. NISSAN does not recommend the use of fuels of which the oxygenate content and the fuel compatibility for your NISSAN cannot be readily determined. If in doubt, ask your service station manager.

If you use oxygenate-blend gasoline, please take the following precautions as the usage of such fuels may cause vehicle performance problems and/or fuel system damage.

- **The fuel should be unleaded and have an octane rating no lower than that recommended for unleaded gasoline.**
- **If an oxygenate-blend other than methanol blend is used, it should contain no more than 15% oxygenate.**
- **If a methanol blend is used, it should contain no more than 5% methanol (methyl alcohol, wood alcohol). It should also contain a suitable amount of appropriate cosolvents and corrosion inhibitors. If not properly formulated with appropriate cosolvents and corrosion inhibitors, such methanol blends may cause fuel system damage and/or vehicle performance problems. At this time, sufficient data is not available to ensure that all methanol blends are suitable for use in NISSAN vehicles.**

If any driveability problems such as engine stalling and difficult hot-starting are experienced after using oxygenate-blend fuels, immediately change to a non-oxygenate fuel or a fuel with a low blend of MTBE.

Take care not to spill gasoline during refueling. Gasoline containing oxygenates can cause paint damage.

E–15 fuel

E-15 fuel is a mixture of approximately 15% fuel ethanol and 85% unleaded gasoline. E-15 can only be used in vehicles designed to run on E-15 fuel. U.S. government regulations require fuel ethanol dispensing pumps to be identified with small, square, orange and black label with the common abbreviation or the appropriate percentage for that region.

E–85 fuel

E-85 fuel is a mixture of approximately 85% fuel ethanol and 15% unleaded gasoline. E-85 can only be used in a Flexible Fuel Vehicle (FFV). Do not use E-85 in your vehicle. U.S. government regulations require fuel ethanol dispensing pumps to be identified by a small, square, orange and black label with the common abbreviation or the appropriate percentage for that region.

Fuel containing MMT

MMT, or methylcyclopentadienyl manganese tricarbonyl, is an octane boosting additive. NISSAN does not recommend the use of fuel containing MMT. Such fuel may adversely affect vehicle performance, including the emissions control system. Note that while some fuel pumps label MMT content, not all do, so you may have to consult your gasoline retailer for more details.

Aftermarket fuel additives

NISSAN does not recommend the use of any aftermarket fuel additives (for example, fuel injector cleaner, octane booster, intake valve deposit removers, etc.) which are sold commercially. Many of these additives intended for gum, varnish or deposit removal may contain active solvents or similar ingredients that can be harmful to the fuel system and engine.

Octane rating tips

Using unleaded gasoline with an octane rating lower than recommended can cause persistent, heavy "spark knock." ("Spark knock" is a metallic rapping noise.) If severe, this can lead to engine damage. If you detect a persistent heavy spark knock even when using gasoline of the stated octane rating, or if you hear steady spark knock while holding a steady speed on level roads, it is recommended that you have a NISSAN dealer correct the condition. Failure to correct the condition is misuse of the vehicle, for which NISSAN is not responsible.

Incorrect ignition timing may result in spark knock, after-run and/or overheating, which may cause excessive fuel consumption or engine damage. If any of the above symptoms are encountered, have your vehicle checked. It is recommended that you visit a NISSAN dealer for servicing.

However, now and then you may notice light spark knock for a short time while accelerating or driving up hills. This is not a cause for concern, because you get the greatest fuel benefit when there is light spark knock for a short time under heavy engine load.

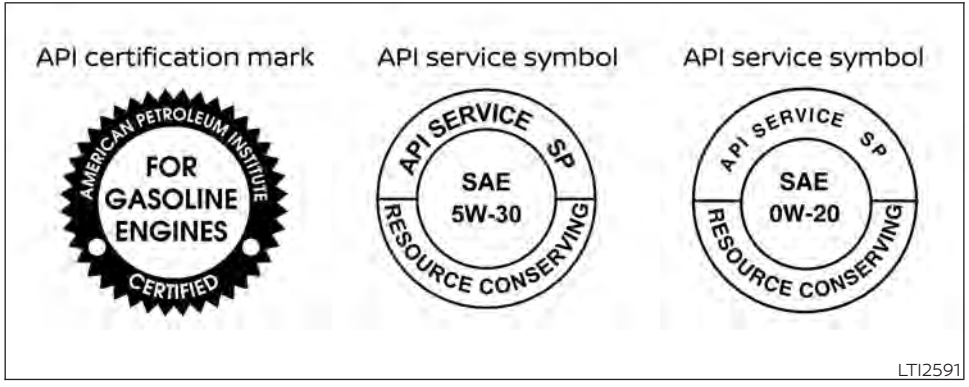

ENGINE OIL AND OIL FILTER RECOMMENDATIONS

Selecting the correct oil

It is essential to choose the correct grade, quality and viscosity engine oil to ensure satisfactory engine life and performance. For additional information, see "Recommended fluids/lubricants and capacities" (P. 10-2). NISSAN recommends the use of an energy conserving oil in order to improve fuel economy.

Select only engine oils that meet the American Petroleum Institute (API) certification or International Lubricant Standardization and Approval Committee (ILSAC) certification and SAE viscosity standard. These oils have the API certification mark on the front of the container. Oils which do not have the specified quality label should not be used as they could cause engine damage.

Oil additives

NISSAN does not recommend the use of oil additives. The use of an oil additive is not necessary when the proper oil type is used and maintenance intervals are followed.

Oil which may contain foreign matter or has been previously used should not be used.

Oil viscosity

The engine oil viscosity or thickness changes with temperature. Because of this, it is important to select the engine oil viscosity based on the temperatures at which the vehicle will be operated before the next oil change. Choosing an oil viscosity other than that recommended could cause serious engine damage.

Selecting the correct oil filter

Your new NISSAN vehicle is equipped with a high-quality Genuine NISSAN oil filter. When replacing, use a Genuine NISSAN oil filter or its equivalent for the reason described in "Change intervals."

Change intervals

The oil and oil filter change intervals for your engine are based on the use of the specified quality oils and filters. Using engine oil and filters that are not of the specified quality, or exceeding recommended oil and filter change intervals could reduce engine life. Damage to the engine caused by improper maintenance or use of incorrect oil and filter quality and/or viscosity is not covered by the NISSAN New Vehicle Limited Warranty.

Your engine was filled with a high-quality engine oil when it was built. You do not have to change the oil before the first recommended change interval. Oil and filter change intervals depend upon how you use your vehicle.

Operation under the following conditions may require more frequent oil and filter changes:

- repeated short distance driving at cold outside temperatures
- driving in dusty conditions
- extensive idling
- stop and go commuting

For additional information, see the "Maintenance and schedules" (P. 9-2).

AIR CONDITIONER SYSTEM REFRIGERANT AND OIL RECOMMENDATIONS

The air conditioner system in your NISSAN vehicle must be charged with the refrigerant HFO-1234yf (R-1234yf) and NISSAN A/C system oil Type PAG (VC100YF oil) or the exact equivalents.

⚠ CAUTION

The use of any other refrigerant or oil will cause severe damage to the air conditioning system and will require the replacement of all air conditioner system components.

The refrigerant HFO-1234yf (R-1234yf) in your NISSAN vehicle does not harm the earth's ozone layer. Although this refrigerant does not affect the earth's atmosphere, certain government regulations require the recovery and recycling of any refrigerant during automotive air conditioner system service. Air conditioner system should only be serviced by trained and certified technicians to ensure proper and safe operation (SAE J2845). A NISSAN dealer has the trained technicians and equipment needed to recover and recycle your air conditioner system refrigerant. Only new and SAEJ2842 certified evaporator(s) shall be used as replacement parts.

A damaged or leaking air conditioning evaporator shall never be repaired or replaced with one removed from a used or salvaged vehicle. To replace a damaged or leaking evaporator, use only new and SAE J2842 certified evaporator(s). It is recommended that you visit a NISSAN dealer when servicing your air conditioner system.

ENGINE

Model		2.5L 4 cylinder (PR25DD engine model)	2.0L 4 cylinder (KR20DDET engine model)
Type		Gasoline, 4-cycle, DOHC	Gasoline, 4-cycle, DOHC
Cylinder arrangement		4-cylinder, inline	4-cylinder, inline
Bore x Stroke	in (mm)	3.504 x 3.937 (89.0 x 100.0)	
when compression ratio = 8	in (mm)		3.307 x 3.547 (84.0 x 90.1)
when compression ratio = 14	in (mm)		3.307 x 3.500 (84.0 x 88.9)
Displacement	cu in (cm ^{3})	151.85 (2,488)	
when compression ratio = 8	cu in (cm ^{3})		121.86 (1,997)
when compression ratio = 14	cu in (cm ^{3})		120.22 (1,970)
Firing order		1–3–4–2	1–3–4–2
Idle speed			
CVT in N (Neutral) position			
Ignition timing (degree B.T.D.C. at idle speed)		No adjustment is necessary.	
CO % at idle			
Spark plug		DXE22H11C	DILKAR7N9HG
Spark plug gap (Nominal)	in (mm)	0.043 (1.1)	0.035 (0.9)
Camshaft operation		Timing chain	Timing chain

This spark ignition system complies with the Canadian standard ICES-002.

WHEELS AND TIRES

Wheel type	Size	Offset in (mm)
Steel	16 x 7.0J	1.77 (45)
Aluminum	17 x 7.5J	1.97 (50)
Aluminum	19 x 8.0J	2.17 (55)
T-type (Steel spare)	16 x 4T	1.18 (30)
Tire size		
2.5 S model	215/60R16	
2.5 S/SV and SL models	215/55R17	
2.5 and 2.0 SR/Platinum models	235/40R19	
Spare tire		
Temporary	T135/70D16	
Temporary	T135/90D16	
Not equipped	with emergency tire puncture repair kit	

DIMENSIONS AND WEIGHTS

			Unit: in (mm)
Overall length		without license plate bracket	192.9 (4,900)
Overall width		without mirrors	72.9 (1,852)
Overall height		at Base Curb Weight to Roof Metal	
2.5 L			
with front wheel drive			
	U.S.A.	S model	56.7 (1,440)
	U.S.A.	SV and SL model	56.8 (1,444)
	U.S.A.	SR model	56.9 (1,444)
with All-wheel drive			
	Canada	S model	57.2 (1,452)
	U.S.A. / Canada	SV and SL models	57.3 (1,456)
	U.S.A. / Canada	Platinum model	57.4 (1,458)
	U.S.A.	SR model	57.4 (1,458)
	Canada	SR model	57.4 (1,459)

			Unit: in (mm)
2.0 L			
	U.S.A.	SR model	56.8 (1,443)
Front and Rear track			
		16 inch wheel	63.6 (1,615)
		17 inch wheel	63.2 (1,605)
		19 inch wheel	62.8 (1,595)
Wheelbase			111.2 (2,825)
Gross vehicle weight rating	lbs. (kg)	Refer to the "F.M.V.S.S./ C.M.V.S.S. certification label" on the center pillar between the driver's side front and rear doors.	
Gross axle weight rating			
Front	lbs. (kg)		
Rear	lbs. (kg)		

WHEN TRAVELING OR REGISTERING IN ANOTHER COUNTRY

When planning to drive your NISSAN vehicle in another country, you should first find out if the fuel available is suitable for your vehicle's engine.

Using fuel with an octane rating that is too low may cause engine damage. All gasoline vehicles must be operated with unleaded gasoline. Therefore, avoid taking your vehicle to areas where appropriate fuel is not available.

When transferring the registration of your vehicle to another country, state, province or district, it may be necessary to modify the vehicle to meet local laws and regulations.

The laws and regulations for motor vehicle emission control and safety standards vary according to the country, state, province or district; therefore, vehicle specifications may differ.

When any vehicle is to be taken into another country, state, province or district and registered, its modifications, transportation and registration are the responsibility of the user. NISSAN is not responsible for any inconvenience that may result.

VEHICLE IDENTIFICATION

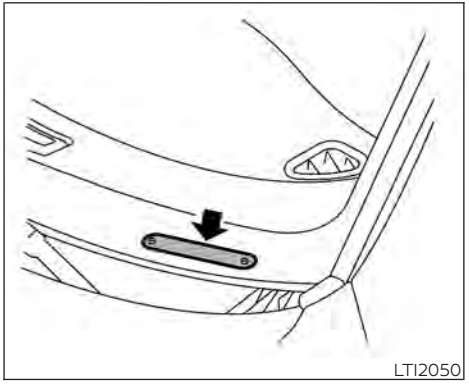

VEHICLE IDENTIFICATION NUMBER (VIN) PLATE

The Vehicle Identification Number (VIN) plate is attached as shown. This number is the identification for your vehicle and is used in the vehicle registration.

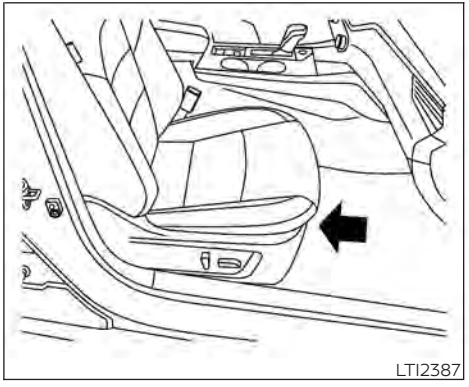

VEHICLE IDENTIFICATION NUMBER (chassis number)

The vehicle identification number is located as shown.

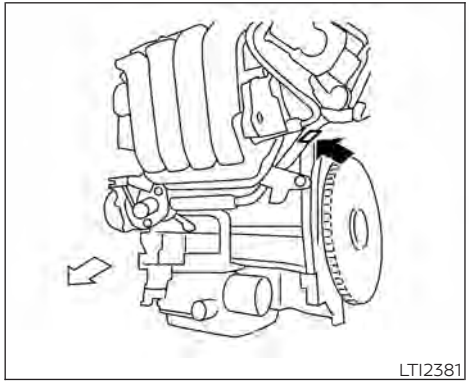

2.5L 4 cylinder (PR25DD engine model)

ENGINE SERIAL NUMBER

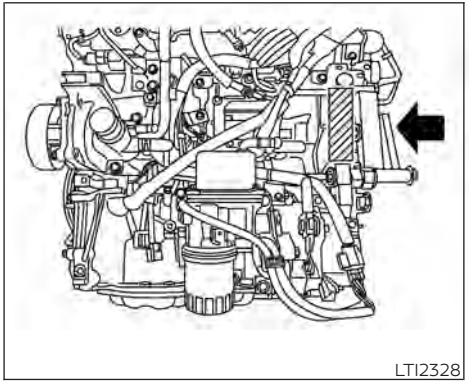

2.0L 4 cylinder (KR20DDET engine model)

The number is stamped on the engine as shown.

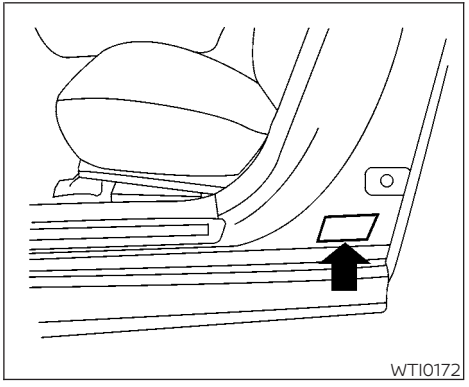

F.M.V.S.S./C.M.V.S.S. CERTIFICATION LABEL

The Federal/Canadian Motor Vehicle Safety Standard (F.M.V.S.S./C.M.V.S.S.) certification label is affixed as shown. This label contains valuable vehicle information, such as: (GVWR), (GAWR), month and year of manufacture, (VIN), etc. Review it carefully.

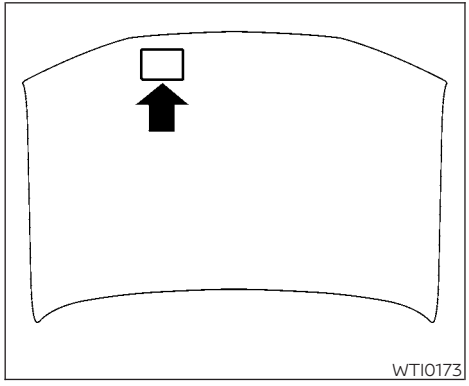

EMISSION CONTROL INFORMATION LABEL

The emission control information label is attached to the underside of the hood as shown.

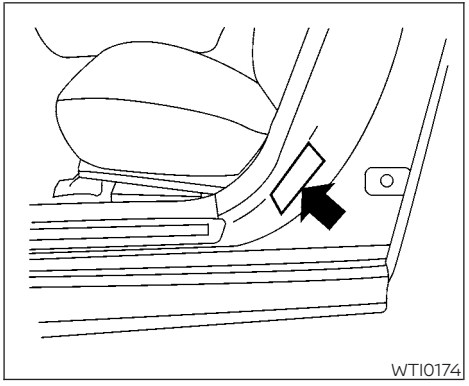

TIRE AND LOADING INFORMATION LABEL

The cold tire pressure is shown on the Tire and Loading Information label. The label is located as shown.

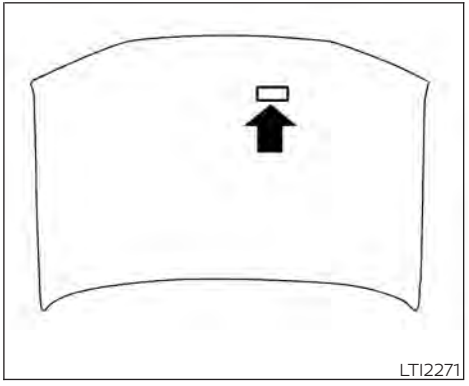

AIR CONDITIONER SPECIFICATION LABEL

The air conditioner specification label is affixed to the underside of the hood as shown.

Symbol Name	Reference	Graphic
Caution	ISO 7000 0434	
Air Conditioning System (MAC)	ISO 2575 D01	
MAC System Lubricant Type (PAG–POE)		
Requires Registered Technician to Service MAC System		
Flammable Refrigerant		

Air Conditioner Specification Label Symbols

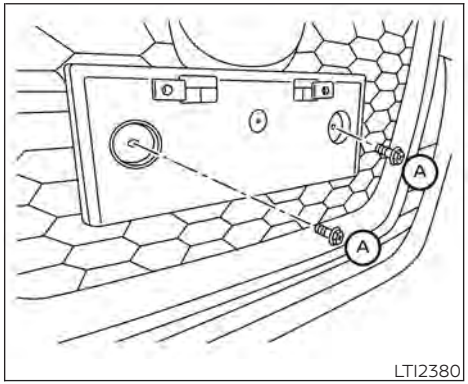

To mount the front license plate, attach the license plate bracket to the bumper fascia at the location marks (small dimples) using the two provided screws Ⓐ.

⚠WARNING

- **It is extremely dangerous to ride in a cargo area inside a vehicle. In a collision, people riding in these areas are more likely to be seriously injured or killed.**
- **Do not allow people to ride in any area of your vehicle that is not equipped with seats and seat belts.**
- **Be sure everyone in your vehicle is in a seat and using a seat belt properly.**

TERMS

It is important to familiarize yourself with the following terms before loading your vehicle:

- Curb Weight (actual weight of your vehicle) - vehicle weight including: standard and optional equipment, fluids, emergency tools, and spare tire assembly. This weight **does not** include passengers and cargo.
- GVW (Gross Vehicle Weight) - curb weight plus the combined weight of passengers and cargo.
- GVWR (Gross Vehicle Weight Rating) - maximum total combined weight of the unloaded vehicle, passengers, cargo, hitch, trailer tongue load and any other optional equipment. This information is located on the F.M.V.S.S./C.M.V.S.S. certification label.
- GAWR (Gross Axle Weight Rating) - maximum weight (load) limit specified for the front or rear axle. This information is located on the F.M.V.S.S./C.M.V.S.S. certification label.
- GCWR (Gross Combined Weight Rating) - The maximum total weight rating of the vehicle, passengers, cargo, and trailer.
- Vehicle Capacity Weight, Load limit, Total load capacity - maximum total weight limit specified of the load (passengers and cargo) for the vehicle. This is the maximum combined weight of occupants and cargo that can be loaded into the vehicle. If the vehicle is used to tow a trailer, the trailer tongue weight must be included as part of the cargo load. This information is located on the Tire and Loading Information label.
- Cargo capacity - permissible weight of cargo, the subtracted weight of occupants from the load limit.

VEHICLE LOAD CAPACITY

Before driving a loaded vehicle, confirm that you do not exceed the Gross Vehicle Weight Rating (GVWR) or the Gross Axle Weight Rating (GAWR) for your vehicle. Both the GVWR and GAWR are located on the F.M.V.S.S./C.M.V.S.S. certification label. For additional information, see "Measurement of weights" (P. 10-20).

Do not exceed the load limit of your vehicle shown as "The combined weight of occupants and cargo" on the Tire and Loading Information label. Do not exceed the number of occupants shown as "Seating Capacity" on the Tire and Loading Information label.

To get "the combined weight of occupants and cargo", add the weight of all occupants, then add the total cargo weight. Examples are shown in the following illustration.

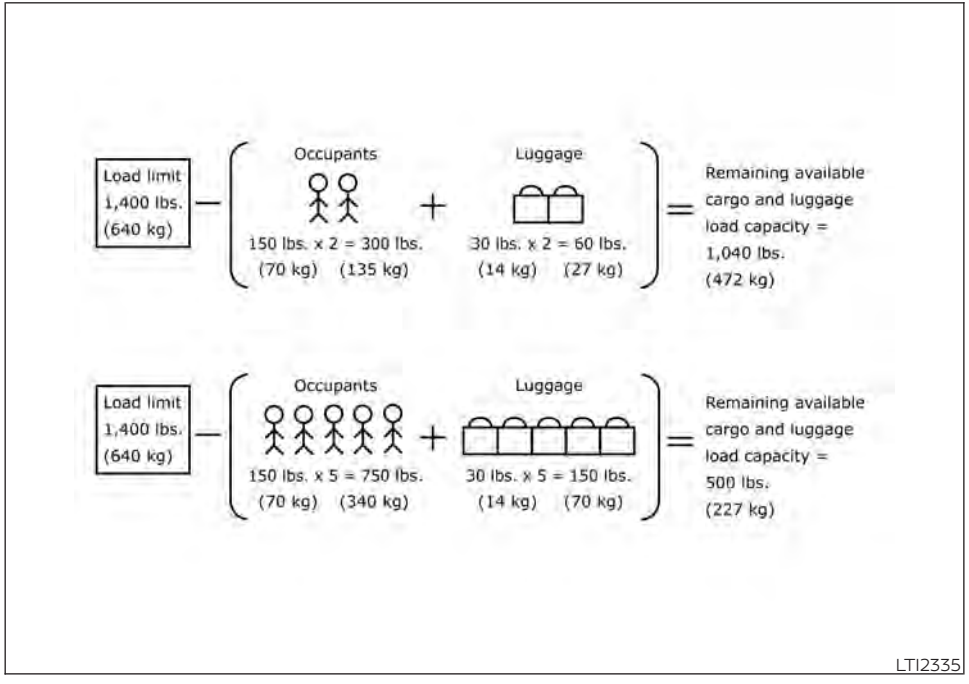

Example

1. Locate the statement "The combined weight of occupants and cargo should never exceed XXX kg or XXX lbs." on your vehicle's placard.
2. Determine the combined weight of the driver and passengers that will be riding in your vehicle.
3. Subtract the combined weight of the driver and passengers from XXX kg or XXX lbs.
4. The resulting figure equals the available amount of cargo and luggage load capacity. For example, if the "XXX" amount equals 1400 lbs. and there will be five 150 lbs. passengers in your vehicle, the amount of available cargo and luggage load capacity is 650 lbs. (1400-750 (5 X 150) = 650 lbs.)

Steps For Determining Correct Load Limit

5. Determine the combined weight of luggage and cargo being loaded on the vehicle. That weight may not safely exceed the available cargo and luggage load capacity calculated in step 4.
6. If your vehicle will be towing a trailer, load from your trailer will be transferred to your vehicle. Consult this manual to determine how this reduces the available cargo and luggage load capacity of your vehicle.

Towing a trailer with a vehicle that is not intended for towing may result in an accident involving injury or death.

⚠ WARNING

Do not tow a trailer with your vehicle. Towing a trailer may result in an accident involving injury or death.

Before driving a loaded vehicle, confirm that you do not exceed the Gross Vehicle Weight Rating (GVWR) or the Gross Axle Weight Rating (GAWR) for your vehicle. For additional information, see "Measurement of weights" (P. 10-20).

Also check tires for proper inflation pressures. For additional information, see "Tire and Loading Information label" (P. 8-31).

LOADING TIPS

- The GVW must not exceed GVWR or GAWR as specified on the F.M.V.S.S./C.M.V.S.S. certification label.
- Do not load the front and rear axle to the GAWR. Doing so will exceed the GVWR.

⚠ WARNING

- **Properly secure all cargo with ropes or straps to help prevent it from sliding or shifting. Do not place cargo higher than the seatbacks. In a sudden stop or collision, unsecured cargo could cause personal injury.**
- **Do not load your vehicle any heavier than the GVWR or the maximum front and rear GAWRs. If you do, parts of your vehicle can break, tire damage could occur, or it can change the way your vehicle handles. This could result in loss of control and cause personal injury.**

- **Overloading not only can shorten the life of your vehicle and the tire, but can also cause unsafe vehicle handling and longer braking distances. This may cause a premature tire failure which could result in a serious accident and personal injury. Failures caused by overloading are not covered by the vehicle's warranty.**

MEASUREMENT OF WEIGHTS

Secure loose items to prevent weight shifts that could affect the balance of your vehicle. When the vehicle is loaded, drive to a scale and weigh the front and the rear wheels separately to determine axle loads. Individual axle loads should not exceed either of the Gross Axle Weight Ratings (GAWR). The total of the axle loads should not exceed the Gross Vehicle Weight Rating (GVWR). These ratings are given on the vehicle certification label. If weight ratings are exceeded, move or remove items to bring all weights below the ratings.

Do not tow a trailer with your vehicle.

FLAT TOWING

Towing your vehicle with all four wheels on the ground is sometimes called flat towing. This method is sometimes used when towing a vehicle behind a recreational vehicle, such as a motor home.

⚠ CAUTION

- **Failure to follow these guidelines can result in severe transmission damage.**
- **Whenever flat towing your vehicle, always tow forward, never backward.**
- **Never tow your front wheel drive vehicle with the front tires on the ground. Doing so may cause serious and expensive damage to the powertrain.**
- **DO NOT tow any continuously variable transmission vehicle with all four wheels on the ground (flat towing). Doing so WILL DAMAGE internal transmission parts due to lack of transmission lubrication.**
- **For emergency towing procedures see "Towing recommended by NISSAN" (P. 6-20).**

Continuously Variable Transmission (CVT)

To tow a vehicle equipped with a CVT, an appropriate vehicle dolly **MUST** be placed under the towed vehicle's drive wheels. **Always** follow the dolly manufacturer's recommendations when using their product.

DOT (Department of Transportation) Quality Grades: All passenger car tires must conform to federal safety requirements in addition to these grades.

Quality grades can be found where applicable on the tire sidewall between tread shoulder and maximum section width. For example:

Treadwear 200 Traction AA Temperature A

Treadwear

The treadwear grade is a comparative rating based on the wear rate of the tire when tested under controlled conditions on a specified government test course. For example, a tire graded 150 would wear one and one-half (1 1/2) times as well on the government course as a tire graded 100. The relative performance of tires depends upon the actual conditions of their use, however, and may depart significantly from the norm due to variations in driving habits, service practices and differences in road characteristics and climate.

Traction AA, A, B and C

The traction grades, from highest to lowest, are AA, A, B, and C. Those grades represent the tire's ability to stop on wet pavement as measured under controlled conditions on specified government test surfaces of asphalt and concrete. A tire marked C may have poor traction performance.

⚠ WARNING

The traction grade assigned to this tire is based on straight-ahead braking traction tests, and does not include acceleration, cornering, hydroplaning, or peak traction characteristics.

Temperature A, B and C

The temperature grades are A (the highest), B, and C, representing the tire's resistance to the generation of heat, and its ability to dissipate heat when tested under controlled conditions on a specified indoor laboratory test wheel. Sustained high temperature can cause the material of the tire to degenerate and reduce tire life, and excessive temperature can lead to sudden tire failure. The grade C corresponds to a level of performance which all passenger car tires must meet under the Federal Motor Safety Standard No. 109. Grades B and A represent higher levels of performance on the laboratory test wheel than the minimum required by law.

⚠ WARNING

The temperature grade for this tire is established for a tire that is properly inflated and not overloaded. Excessive speed, under-inflation, or excessive loading, either separately or in combination, can cause heat build-up and possible tire failure.

EMISSION CONTROL SYSTEM WARRANTY

Your NISSAN vehicle is covered by the following emission warranties:

For USA

1. Emission Defects Warranty
2. Emissions Performance Warranty

Details of this warranty may be found with other vehicle warranties in your Warranty Information Booklet which comes with your NISSAN vehicle. If you did not receive a Warranty Information Booklet, or it is lost, you may obtain a replacement by writing to:

- Nissan North America, Inc.
  Consumer Affairs Department
  P.O. Box 685003
  Franklin, TN 37068-5003

For Canada

Emission Control System Warranty

Details of this warranty may be found with other vehicle warranties in your Warranty Information Booklet which comes with your NISSAN vehicle. If you did not receive a Warranty Information Booklet, or it is lost, you may obtain a replacement by writing to:

- Nissan Canada Inc.
  5290 Orbitor Drive
  Mississauga, Ontario, L4W 4Z5

REPORTING SAFETY DEFECTS

For USA

If you believe that your vehicle has a defect which could cause a crash or could cause injury or death, you should immediately inform the National Highway Traffic Safety Administration (NHTSA) in addition to notifying NISSAN.

If NHTSA receives similar complaints, it may open an investigation, and if it finds that a safety defect exists in a group of vehicles, it may order a recall and remedy campaign. However, NHTSA cannot become involved in individual problems between you, your dealer, or NISSAN.

To contact NHTSA, you may call the Vehicle Safety Hotline toll-free at 1-888-327-4236 (TTY: 1-800-424-9153); go to http://www.safercar.gov; or write to: Administrator, NHTSA, 400 Seventh Street, SW., Washington, D.C.

20590. You can also obtain other information about motor vehicle safety from http://www.safercar.gov.

You may notify NISSAN by contacting our Consumer Affairs Department, toll-free, at 1-800-NISSAN-1.

For Canada

If you believe that your vehicle has a defect which could cause a crash or could cause injury or death, you should immediately inform Transport Canada in addition to notifying NISSAN.

If Transport Canada receives complaints, it may open an investigation, and if it finds that a safety defect exists in a group of vehicles, it may request that NISSAN conduct a recall campaign. However, Transport Canada cannot become involved in individual problems between you, your dealer, or NISSAN.

You may contact Transport Canada's Defect Investigations and Recalls Division toll free at 1-800-333-0510. You may also report safety defects online at: http://www.tc.gc.ca/eng/motorvehiclesafety/menu.htm (English speakers) or http://www.tc.gc.ca/fra/securiteautomobile/menu.htm (French speakers)

Or contact Transport Canada by mail at:
Transport Canada Motor Vehicle Safety Investigations Laboratory
80 Noel Street Gatineau, QC J8Z0A1

Additional information concerning motor vehicle safety may be obtained from Transport Canada's Road Safety Information Centre at 1-800-333-0371 or online at www.tc.gc.ca/roadsafety (English speakers) or www.tc.gc.ca/securiteroutiere (French speakers).

To notify NISSAN of any safety concerns please contact our Consumer Information Centre toll free at 1-800-387-0122.

READINESS FOR INSPECTION/ MAINTENANCE (I/M) TEST

⚠ WARNING

A vehicle equipped with All -Wheel Drive (AWD) should never be tested using a two wheel dynamometer (such as the dynamometers used by some states for emissions testing), or similar equipment. Make sure you inform the test facility personnel that your vehicle is equipped with AWD before it is placed on a dynamometer. Using the wrong test equipment may result in drivetrain damage or unexpected vehicle movement which could result in serious vehicle damage or personal injury.

Due to legal requirements in some states and Canadian Provinces, your vehicle may be required to be in what is called the "ready condition" for an Inspection/ Maintenance (I/M) test of the emission control system.

The vehicle is set to the "ready condition" when it is driven through certain driving patterns. Usually, the ready condition can be obtained by ordinary usage of the vehicle.

If a powertrain system component is repaired or the battery is disconnected, the vehicle may be reset to a "not ready" condition. Before taking the I/M test, check the vehicle's inspection/maintenance test readiness condition. Place the ignition switch in the ON position without starting the engine. If the Malfunction Indicator Light (MIL) comes on steady for 20 seconds and then blinks for 10 seconds , the I/M test condition is "not ready". If the MIL does not blink after 20 seconds, the I/M test condition is "ready". It is recommended that you visit a NISSAN dealer to set the "ready condition" or to prepare the vehicle for testing.

EVENT DATA RECORDERS (EDR)

This vehicle is equipped with an Event Data Recorder (EDR). The main purpose of an EDR is to record, in certain crash or near crash-like situations, such as an air bag deployment or hitting a road obstacle, data that will assist in understanding how a vehicle's systems performed. The EDR is designed to record data related to vehicle dynamics and safety systems for a short period of time, typically 30 seconds or less. The EDR in this vehicle is designed to record such data as:

- How various systems in your vehicle were operating;
- Whether or not the driver and passenger safety belts were buckled/fastened;
- How far (if at all) the driver was depressing the accelerator and/or brake pedal; and,
- How fast the vehicle was traveling.
- Sounds are not recorded.

These data can help provide a better understanding of the circumstances in which crashes and injuries occur. NOTE: EDR data are recorded by your vehicle only if a non-trivial crash situation occurs; no data are recorded by the EDR under normal driving conditions and no personal data (e.g., name, gender, age, and crash location) are recorded. However, other parties, such as law enforcement, could combine the EDR data with the type of personally identifying data routinely acquired during a crash investigation.

To read data recorded by an EDR, special equipment is required, and access to the vehicle or the EDR is needed. In addition to the vehicle manufacturer and NISSAN dealer, other parties, such as law enforcement, that have the special equipment, can read the information if they have access to the vehicle or the EDR.

EDR data will only be accessed with the consent of the vehicle owner or lessee or as otherwise required or permitted by law.

ADDITIONAL DATA RECORDING (on vehicles equipped with optional ProPILOT Assist)

If your vehicle is equipped with the optional ProPILOT Assist, it will also be equipped with a supplemental vehicle data recording function.

The data recording function is designed to record such data as:

- Driver operational status of accelerator, brakes, steering, etc.
- Detection status of a vehicle ahead and lane markers
- Vehicle information including distance to vehicle ahead and lateral position
- Information on the operation of the ProPILOT Assist and other crash avoidance features
- ProPILOT Assist malfunction diagnosis information
- External images from multi-sensing front camera (Available only when SRS air bag or AEB with Pedestrian Detection system is activated)

ProPILOT Assist does not record conversations, sounds or images of the inside of the vehicle.

To read this vehicle data, special equipment is required and access to the vehicle or the recording unit is needed. This vehicle data will only be accessed with the consent of the vehicle owner or lessee or as otherwise required or permitted by law.

If downloaded, NISSAN may use the data recorded for the purpose of improving NISSAN's vehicle safety performance.

NISSAN will not disclose/provide the recorded data to a third party except:

- With the consent of the vehicle owner or with the consent of the lessee
- In response to an official request from law enforcement, a court order, governmental agency, or other legally enforceable requests
- For use as part of NISSAN's defense of litigation
- For research purposes after the data is modified such that it is no longer tied to a specific vehicle or vehicle owner

If you have any questions regarding the data NISSAN may collect about you, please visit our Privacy Policy: https://www.nissanusa.com.

OWNER'S MANUAL/SERVICE MANUAL ORDER INFORMATION

Genuine NISSAN Service Manuals for this model year and prior can be purchased. A Genuine NISSAN Service Manual is the best source of service and repair information for your vehicle. This manual is the same one used by the factory-trained technicians working at NISSAN dealerships. Genuine NISSAN Owner's Manuals can also be purchased.

For USA

For current pricing and availability of Genuine **NISSAN Service Manuals,** contact:

www.nissan-techinfo.com

For current pricing and availability of Genuine **NISSAN Owner's Manuals,** contact:

1-800-247-5321

For Canada

To purchase a copy of a Genuine NISSAN Service Manual or Owner's Manual, for this model year and prior, please contact your nearest NISSAN dealer. For the phone number and location of a NISSAN dealer in your area, call the NISSAN Information Center at 1-800-387-0122 and a bilingual NISSAN representative will assist you.

11 Index

A

Active noise cancellation
  Active sound enhancement 5-187
Active Ride Control (ARC) 5-178
Air bag (See supplemental restraint system) 1-47
Air bag system
  Front (See supplemental front impact air bag system) 1-54
Air bag warning light 1-67, 2-12
Air bag warning light, supplemental 1-67, 2-12
Air cleaner housing filter 8-18
Air conditioner
  Air conditioner operation 4-35, 4-41
  Air conditioner specification label . . 10-14
  Air conditioner system refrigerant recommendations 10-8
  Air conditioner system refrigerant and oil recommendations 10-8
  Heater and air conditioner controls 4-33, 4-41
  Servicing air conditioner 4-44
Air flow charts 4-36
Alarm system (See vehicle security system) 2-52
All-Wheel Drive 5-168
Anchor point locations 1-28
Antenna 4-64
Anti-lock Braking System (ABS) 5-173
Antifreeze 5-185
Armrests 1-7
Audio system 4-45
  AM radio operation 4-51
  AM radio reception 4-45
  AM/FM radio 4-49, 4-51
  Auxiliary (AUX) devices operation . . 4-52
  Bluetooth® audio 4-60
  FM radio operation 4-52
  FM radio reception 4-45
  iPod® Player 4-57
  iPod® player operation 4-57
  Radio 4-45
  USB (Universal Serial Bus) Connection Port 4-54
  USB Connections 4-55
  USB interface 4-54
Autolight switch 2-58
Automatic
  Automatic power window switch . . . 2-76
Automatic anti-glare inside mirror . . . 3-29
Automatic brake hold 5-27
Automatic door locks 3-6
Automatic Emergency Braking (AEB) 2-13, 2-16
Automatic Emergency Braking (AEB) with Pedestrian Detection 5-135
AWD 5-168

B

Battery 5-185, 8-14
  Charge warning light 2-11
Battery replacement 8-23
  Key fob 8-23
  NISSAN Intelligent Key® 8-24
Before starting the engine 5-16
Belt (See drive belt) 8-16
Blind Spot Warning (BSW) 5-46
Bluetooth® audio 4-60
Bluetooth® hands-free phone system . . 4-67
  Bluetooth® connections 4-81
  Connecting procedure 4-72
  Phone indicators 4-71
  Text messaging 4-77
  Voice commands 4-73
Booster seats 1-43
Brake
  Anti-lock Braking System (ABS) 5-173
  Brake fluid 8-12
  Brake light (See stop light) 8-26
  Brake system 5-173
  Brake warning light 2-10
  Brake wear indicators 2-18, 8-20
  Self-adjusting brakes 8-20
Brake Assist 5-175
Brake fluid 8-12
Brake system 5-173
Brakes 8-20
Break-in schedule 5-167

Brightness control
Instrument panel 2-62
Brightness/contrast button 4-7
Bulb check/instrument panel. 2-10
Bulb replacement. 8-26

C

C.M.V.S.S. certification label 10-13
Capacities and recommended fuel/lubricants 10-2
Car phone or CB radio 4-67
Cargo
(See vehicle loading information) 10-16
Chassis control. 5-178
Check tire pressure 2-31, 2-48
Child restraints 1-21, 1-22, 1-23, 1-25
LATCH (Lower Anchors and Tethers for CHildren) System 1-25
Precautions on child restraints 1-31, 1-38, 1-43
Top tether strap anchor point locations 1-28
Child safety rear door lock 3-7
Cleaning exterior and interior 7-2, 7-5
Clock set/adjustment 4-5
Cold weather driving 5-185
Console box 2-72
Continuously Variable Transmission (CVT) 5-18
Continuously Variable Transmission (CVT) fluid 8-12
Driving with Continuously Variable Transmission (CVT) 5-18
Control panel buttons 4-3
Brightness/contrast button. 4-7
Controls
Audio controls (steering wheel). 4-63
Heater and air conditioner controls 4-33, 4-41
Coolant
Capacities and recommended fuel/lubricants 10-2
Changing engine coolant 8-6
Checking engine coolant level 8-6
Engine coolant temperature gauge. . .2-6
Corrosion protection. 7-8
Cruise control 5-68
Cup holders 2-73, 2-74

D

Daytime Running Light System 2-62
Defroster switch
Rear window and outside mirror defroster switch 2-56
Dimensions and weights 10-11
Dimmer switch for instrument panel . . .2-62
Display controls (see control panel buttons) 4-3
Door locks 3-4
Drive belt 8-16
Driving
Cold weather driving. 5-185
Driving with Continuously Variable Transmission (CVT) 5-18
Precautions when starting and driving. 5-4, 5-10
Driving the vehicle. 5-18

E

Economy - fuel 5-168
Emergency call (SOS) button 2-67
Emergency engine shutoff. 5-15, 6-2
Emission control information label 10-14
Emission control system warranty. . . .10-22
Engine
Before starting the engine 5-16
Capacities and recommended fuel/lubricants 10-2
Changing engine coolant 8-6
Changing engine oil 8-8
Changing engine oil filter 8-8
Checking engine coolant level 8-6
Checking engine oil level. 8-7
Engine compartment check locations 8-3
Engine coolant temperature gauge. . .2-6
Engine cooling system. 8-5
Engine oil 8-7
Engine oil and oil filter recommendation 10-7
Engine oil pressure warning light 2-11
Engine oil viscosity 10-7
Engine serial number 10-13
Engine specifications 10-9

Starting the engine 5-16
Engine Block Heater. 5-186
Engine coolant temperature gauge 2-6
Event Data recorders 10-24, 10-25
Exhaust gas (Carbon monoxide) 5-4
Explanation of maintenance items 9-2
Explanation of scheduled maintenance items 9-5
Extended storage switch 2-70
Eyeglass case 2-73

F

F.M.V.S.S. certification label 10-13
Flashers (See hazard warning flasher switch) 6-2
Flat tire 6-3, 6-4
Floor mat positioning aid 7-6
Fluid
Brake fluid 8-12
Capacities and recommended fuel/lubricants 10-2
Continuously Variable Transmission (CVT) fluid 8-12
Engine coolant. 8-5
Engine oil 8-7
Windshield-washer fluid 8-13
Fog light switch 2-63
Front air bag system (See supplemental restraint system) 1-54
Front power seat adjustment 1-4
Front seats 1-2
Front-door pocket 2-71
Fuel
Capacities and recommended fuel/lubricants 10-2
Fuel economy 5-168
Fuel gauge 2-7
Fuel octane rating 10-6
Fuel recommendation 10-4
Fuel-filler door and cap 3-25
Fuel-filler door lock opener lever 3-25
Loose fuel cap warning 2-30, 2-46
Fuel efficient driving tips 5-167
Fuel gauge 2-7
Fuel-filler door 3-25
Fuses. 8-21
Fusible links 8-22

G

Garage door opener, HomeLink® Universal Transceiver 2-81, 2-83, 2-84
Gas cap 3-25
Gauge
Engine coolant temperature gauge. . .2-6
Fuel gauge 2-7
Speedometer 2-4
Tachometer 2-6
Trip odometer 2-5
General maintenance 9-2
Glove box 2-72
Glove box lock 2-72

H

Hands-free phone system, Bluetooth® . .4-67
Hazard warning flasher switch. 6-2
Head restraints 1-8
Headlight and turn signal switch 2-57
Headlight control switch. 2-57
Headlights 8-25
Heated seat switches 2-64
Heated steering wheel. 2-65
Heater
Heater and air conditioner controls 4-33, 4-41
Heater operation 4-34, 4-42
Hill start assist system 5-178
HomeLink® Universal Transceiver 2-81, 2-83, 2-84
Hood 3-22
Horn 2-64

I

Ignition switch
Push-button ignition switch 5-13
Immobilizer system 2-54, 5-16
Important vehicle information label . . .10-13
In-cabin microfilter 8-18
Increasing fuel economy. 5-168
Indicator
NISSAN Intelligent Key® battery discharge indicator 5-15
Inside automatic anti-glare mirror 3-29
Instrument brightness control 2-62

Instrument panel 0-6, 2-2
Instrument panel dimmer switch 2-62
Intelligent Around View Monitor 4-16
Intelligent Cruise Control (ICC). 5-71
Intelligent Cruise Control (ICC)
(for vehicles with ProPILOT Assist) 5-106
Intelligent Driver Alertness (I-DA) 5-162
Intelligent Forward Collision Warning
(I-FCW) 5-147
Intelligent Key system
Key operating range 3-9
Key operation 3-10
Mechanical key. 3-3
Remote keyless entry operation 3-14
Troubleshooting guide 3-16
Warning signals. 3-16
Intelligent Lane Intervention (I-LI) 5-40
Intelligent Trace Control (I-TC) 5-178
Interior light. 2-79
Interior trunk lid release 3-24
iPod® Player 4-57
ISOFIX child restraints. 1-25

J

Jump starting 6-17, 8-15

K

Key 3-2
Key fob battery replacement 8-23
Keyless entry
With Intelligent Key system
(See Intelligent Key system) 3-14
Keys
NISSAN Intelligent Key®. 3-2
NISSAN Vehicle Immobilizer System
keys 3-4

L

Label
Tire and Loading Information label . .10-14
Labels
Air conditioner specification label . . .10-14
C.M.V.S.S. certification label 10-13
Emission control information label . .10-14
Engine serial number 10-13
F.M.V.S.S. certification label. 10-13
Tire and Loading Information label . .10-14
Vehicle identification number (VIN)
plate 10-12
Warning labels (for SRS) 1-67
Lane Departure Warning (LDW). 5-33
LATCH (Lower Anchors and Tethers for
CHildren) System 1-25
Launch bar menu. 4-7
License plate
Installing the license plate. 10-15
Light
Air bag warning light 1-67, 2-12
Brake light (See stop light) 8-26
Bulb check/instrument panel 2-10
Bulb replacement 8-26
Charge warning light. 2-11
Exterior and Interior lights 8-26
Fog light switch 2-63
Fog lights 8-26
Headlight and turn signal switch 2-57
Headlight control switch 2-57
Headlights. 8-25
Interior light 2-79
Light bulbs 8-25
Low tire pressure warning light 2-13
Low windshield-washer fluid warning
light 2-30, 2-47
Personal lights 2-80
Security indicator light 2-12
Spotlights (See map light) 2-80
Trunk light. 2-80
Lights 8-25
Map lights 2-80
Lock
Child safety rear door lock. 3-7
Door locks 3-4
Fuel-filler door lock opener lever 3-25
Glove box lock 2-72
Power door locks 3-6
Trunk lid lock opener lever 3-22
Loose fuel cap warning. 2-30, 2-46
Low fuel warning light . .2-11, 2-15, 2-30, 2-47
Low tire pressure warning light. 2-13
Low windshield-washer fluid warning
light 2-30, 2-47
Luggage (See vehicle loading
information) 10-16

M

Maintenance
- General maintenance 9-2
- Inside the vehicle 9-3
- Maintenance precautions 8-2
- Outside the vehicle 9-3
- Seat belt maintenance 1-20
- Under the hood and vehicle 9-4

Maintenance requirements. 9-2
Maintenance schedules 9-7
Malfunction indicator light. 2-15
Manual front seat adjustment 1-3
Map lights 2-80
Memory seat 3-31, 3-32, 3-33
Menu button. 4-5
Meters and gauges 2-4
- Instrument brightness control 2-62

Mirror
- Automatic anti-glare inside mirror . . .3-29
- Outside mirrors 3-30
- Rearview. 3-29
- Vanity mirror 3-29

Mirrors. 3-29
Moonroof 2-77, 7-6
Moving Object Detection (MOD) 4-27

N

NISSAN Intelligent Key® 3-2
NISSAN Intelligent Key® battery discharge indicator. 5-15
NISSAN Vehicle Immobilizer System 2-54, 5-16
NissanConnect® Owner's Manual 4-2

O

Octane rating (See fuel octane rating) . .10-6
Oil
- Capacities and recommended fuel/lubricants 10-2
- Changing engine oil 8-8
- Changing engine oil filter 8-8
- Checking engine oil level. 8-7
- Engine oil 8-7
- Engine oil and oil filter recommendation 10-7
- Engine oil viscosity 10-7

Oil control system 2-20, 2-36
Outside mirrors 3-30
Overhead sunglasses holder 2-73
Overheat
- If your vehicle overheats 6-19

Owner's manual order form. 10-26
Owner's manual/service manual order information 10-26

P

Parking
- Parking/parking on hills 5-171

Parking brake 2-11, 2-13, 2-17, 5-25
Personal lights. 2-80
Phone, Bluetooth® hands-free system . .4-67
Power
- Power door locks 3-6
- Power outlet 2-69
- Power rear windows. 2-76
- Power steering system 5-172
- Power windows 2-75
- Rear power windows 2-76

Power outlet 2-69
Power steering 5-172
Precautions
- Maintenance precautions 8-2
- Precautions on booster seats 1-31, 1-38, 1-43
- Precautions on child restraints 1-31, 1-38, 1-43
- Precautions on seat belt usage 1-12
- Precautions on supplemental restraint system 1-47
- Precautions when starting and driving. 5-4, 5-10

ProPILOT Assist 5-94
Push starting. 6-19

R

Radio
- Car phone or CB radio 4-67
- FM/AM radio 4-49

Readiness for inspection maintenance (I/M) test 10-24
Rear Automatic Braking (RAB). 5-127
Rear Cross Traffic Alert (RCTA) 5-58
Rear Door Alert 2-29, 2-45, 2-46, 2-67

Rear power windows 2-76
Rear seat 1-6
Rear Sonar System (RSS) 5-179
Rear window and outside mirror defroster switch 2-56
Rearview mirror 3-29
RearView Monitor. 4-8
Recommended Fluids 10-2
Recorders
  Event Data 10-24, 10-25
Refrigerant recommendation 10-8
Registering a vehicle in another country 10-12
Remote Engine Start 3-19, 5-17
Repairing flat tire 6-11
Repairing tire 6-13
Reporting safety defects (US only) 10-22

S

Safety
  Child safety rear door lock. 3-7
  Child seat belts 1-23, 1-31, 1-38, 1-43
  Reporting safety defects (US only) . .10-22
Seat
  Memory seat 3-31, 3-32, 3-33
Seat adjustment
  Front manual seat adjustment 1-3
  Front power seat adjustment. 1-4
  Rear seat adjustment. 1-6
Seat belt
  Child safety. 1-21
  Infants and small children 1-21, 1-22
  Injured person. 1-15
  Larger children 1-22
  Precautions on seat belt usage 1-12
  Pregnant women. 1-15
  Seat belt extenders 1-20
  Seat belt maintenance 1-20
  Seat belts 1-12, 7-7
  Shoulder belt height adjustment 1-19
  Three-point type with retractor 1-15
Seat belt extenders 1-20
Seat belt warning light 1-14, 2-12
Seatback pockets 2-71
Seats
  Adjustment 1-2
  Armrests. 1-7
  Front seats 1-2
  Manual front seat adjustment 1-3
  Rear seat 1-6
Security indicator light 2-12
Security system (NISSAN Vehicle Immobilizer System), engine start 2-54, 5-16
Security systems
  Vehicle security system 2-52
Self-adjusting brakes. 8-20
Service manual order form 10-26
Servicing air conditioner. 4-44
Shift lever lock release 5-22
Shifting
  Continuously Variable Transmission (CVT) 5-20
Shoulder belt height adjustment 1-19
Siri® Eyes-Free 4-64
Sonar
  Rear system 5-179
Spark plug replacement 8-17
Spark plugs 8-17
Specifications 10-9
Speedometer 2-4
Spotlights (See map light). 2-80
SRS warning label 1-67
Stability control 5-175
Standard maintenance 9-10, 9-28
Starting
  Before starting the engine 5-16
  Jump starting 6-17, 8-15
  Precautions when starting and driving. 5-4, 5-10
  Push starting 6-19
  Starting the engine 5-16
Starting the engine 5-16
Steering
  Heated steering wheel 2-65
  Power steering system 5-172
Steering Assist switch (for vehicles with ProPILOT Assist) 2-66
Steering wheel 3-27
Stop light 8-26
Storage 2-71
Sun visors. 3-28
Sunglasses case. 2-73
Sunglasses holder. 2-73
Sunroof. 2-77, 7-6
Supplemental air bag warning light 1-67, 2-12
Supplemental front impact air bag system. 1-54
Supplemental restraint system
  Information and warning labels. 1-67

Precautions on supplemental restraint system 1-47
Supplemental restraint system (Supplemental air bag system) 1-47
Switch
Autolight switch 2-58
Automatic power window switch . . .2-76
Fog light switch 2-63
Hazard warning flasher switch 6-2
Headlight and turn signal switch 2-57
Headlight control switch 2-57
Instrument brightness control 2-62
Power door lock switch 3-6
Rear window and outside mirror defroster switch 2-56
Turn signal switch 2-63

T

Tachometer 2-6
Temperature gauge
Engine coolant temperature gauge. . .2-6
Theft (NISSAN Vehicle Immobilizer System), engine start 2-54, 5-16
Three-way catalyst. 5-4
Tilt
Telescopic steering 3-27
Tire
Flat tire. 6-3, 6-4
Spare tire 6-5, 8-42
Tire and Loading Information label . .10-14
Tire chains. 8-37
Tire pressure 8-29
Tire rotation. 8-39
Types of tires 8-36
Uniform tire quality grading. 10-21
Wheel/tire size. 10-10
Wheels and tires 8-29
Tire pressure
Low tire pressure warning light 2-13
Tire Pressure Monitoring System (TPMS) 5-5, 6-3
Towing
2-wheel drive models. 6-22
All-wheel drive models 6-21
Flat towing. 10-20
Trailer towing 10-20
Towing a trailer. 10-20
Towing your vehicle. 6-20
Traffic Sign Recognition (TSR). 5-30
Transceiver
HomeLink® Universal Transceiver 2-81, 2-83, 2-84
Transmission
Continuously Variable Transmission (CVT) fluid 8-12
Driving with Continuously Variable Transmission (CVT) 5-18
Transmission shift lever lock release . . .5-22
Travel (See registering a vehicle in another country) 10-12
Trip odometer. 2-5
Trunk access through the rear seat 1-6, 3-24
Trunk lid 3-22
Trunk lid lock opener lever. 3-22
Trunk light 2-80
Turn signal switch. 2-63

U

Uniform tire quality grading 10-21
USB interface 4-54
USB/iPod® Charging Ports 2-70

V

Vanity mirror 3-29
Variable voltage control system 8-16
Vehicle dimensions and weights 10-11
Vehicle Dynamic Control (VDC) system 5-175
Vehicle identification. 10-12
Vehicle identification number (VIN) (Chassis number). 10-12
Vehicle identification number (VIN) plate. 10-12
Vehicle immobilizer system 2-54, 5-16
Vehicle information display 2-18, 2-34
Vehicle loading information 10-16
Vehicle recovery 6-22, 6-23
Vehicle security system 2-52
Vehicle security system (NISSAN Vehicle Immobilizer System), engine start 2-54, 5-16
Ventilators 4-31
Visors 3-28
Voice Prompt Interrupt. 4-70

W

Warning
Air bag warning light 1-67, 2-12
Battery charge warning light. 2-11
Brake warning light 2-10
Engine oil pressure warning light 2-11
Hazard warning flasher switch 6-2
Loose fuel cap warning 2-30, 2-46
Low fuel warning
light 2-11, 2-15, 2-30, 2-47
Low tire pressure warning light 2-13
Low windshield-washer fluid warning
light 2-30, 2-47
Seat belt warning light 1-14, 2-12
Supplemental air bag warning
light. 1-67, 2-12
Vehicle security system 2-52
Warning labels (for SRS) 1-67
Warning lights, indicator lights and audible
reminders 2-9
Weights
(See dimensions and weights) 10-11
Wheel/tire size 10-10
Wheels and tires. 8-29
When traveling or registering in another
country 10-12
Windows 2-75
Locking passengers' windows 2-76
Power rear windows. 2-76
Power windows 2-75
Rear power windows 2-76
Windshield wiper blades 8-19
Windshield-washer fluid 8-13
Wiper
Wiper blades 8-19
Wiper and washer switch 2-55

MEMO

MEMO

MEMO

MEMO

MEMO

MEMO

FUEL RECOMMENDATION:

Use unleaded regular gasoline with an octane rating of at least 87 AKI (Anti-Knock Index) number (Research octane number 91).

⚠ CAUTION

- **Only vehicles with the E-85 filler door label can operate on E-85. Fuel system or other damage can occur if E-85 is used in vehicles that are not designed to run on E-85.**
- **Using a fuel other than that specified could adversely affect the emission control system, and may also affect the warranty coverage.**
- **Under no circumstances should a leaded gasoline be used, because this will damage the three-way catalyst.**
- **Do not use a fuel containing more than 15% ethanol in your vehicle. Your vehicle is not designed to run on a fuel containing more than 15% ethanol. Using a fuel containing more than 15% ethanol in a vehicle not specifically designed for a fuel containing more than 15% ethanol can adversely affect the emission control devices and systems of the vehicle. Damage caused by such fuel is not covered by the NISSAN New Vehicle Limited Warranty.**
- **Do not use fuel that contains the octane booster methylcyclopentadienyl manganese tricarbonyl (MMT). Using fuel containing MMT may adversely affect vehicle performance and vehicle emissions. Not all fuel dispensers are labeled to indicate MMT content, so you may have to consult your gasoline retailer for more details. Note that Federal and California laws prohibit the use of MMT in reformulated gasoline.**
- **U.S. government regulations require ethanol dispensing pumps to be identified by a small, square, orange and black label with the common abbreviation or the appropriate percentage for that region.**

For additional information, see "Recommended fluids/lubricants and capacities" (P. 10-2).

ENGINE OIL RECOMMENDATION:

For additional information, see "Recommended fluids/lubricants and capacities" (P. 10-2).

COLD TIRE PRESSURE:

For additional information, see "Tire and Loading Information label" (P. 8-31).

The label is typically located on the driver side center pillar or on the driver's door. For additional information, see "Wheels and tires" (P. 8-29).

RECOMMENDED NEW VEHICLE BREAK-IN PROCEDURE:

During the first 1,200 miles (2,000 km) of vehicle use, follow the break-in procedure recommendations for the future reliability and economy of your new vehicle. For additional information, see "Break-in schedule" (P. 5-167). Failure to follow these recommendations may result in vehicle damage or shortened engine life.

To view the digital NissanConnect manual, go to
www.nissanquickguide.com/altima/2022/browse
or snap this QR code with an appropriate QR code reader.

Printing : February 2022
Publication No.: OM22EA 0L34U1
Printed in the U.S.A.

L34-D