Foreword

The inside pages of this manual contain a minimum of 50% recycled fibers, including 10% post-consumer fibers.

Welcome to the growing family of new NISSAN owners. This vehicle is delivered to you with confidence. It was produced using the latest techniques and strict quality control.

This manual was prepared to help you understand the operation and maintenance of your vehicle so that you may enjoy many miles of driving pleasure. Please read through this manual before operating your vehicle.

In the U.S., a separate Warranty Information and Maintenance Log Booklet and in Canada, a Warranty and Roadside Assistance Information Booklet explains details about the warranties covering your vehicle and vehicle maintenance schedules. Additionally, a separate Customer Care/Lemon Law Booklet (U.S. only) will explain how to resolve any concerns you may have with your vehicle, as well as clarify your rights under your state's lemon law.

Your NISSAN dealership knows your vehicle best. When you require any service or have any questions, they will be glad to assist you with the extensive resources available to them.

READ FIRST — THEN DRIVE SAFELY

Before driving your vehicle please read this Owner's Manual carefully. This will ensure familiarity with controls and maintenance requirements, assisting you in the safe operation of your vehicle.

⚠ WARNING

IMPORTANT SAFETY INFORMATION REMINDERS FOR SAFETY!

Follow these important rules to help ensure a safe and comfortable trip for you and your passengers!

- **NEVER drive under the influence of alcohol or drugs.**
- **ALWAYS observe posted speed limits and never drive too fast for conditions.**
- **ALWAYS use your seat belts and appropriate child restraint systems. Pre-teen children should be seated in the rear seat.**
- **ALWAYS provide information about the proper use of vehicle safety features to all occupants of the vehicle.**
- **ALWAYS review this owner's manual for important safety information.**

MODIFICATION OF YOUR VEHICLE

This vehicle should not be modified. Modification could affect its performance, safety or durability, and may even violate governmental regulations. In addition, damage or performance problems resulting from modifications may not be covered under NISSAN warranties.

WHEN READING THE MANUAL

This manual includes information for all options available on this model. Therefore, you may find some information that does not apply to your vehicle.

All information, specifications and illustrations in this manual are those in effect at the time of printing. NISSAN reserves the right to change specifications or design without notice and without obligation.

The inside pages of this manual contain a minimum of 50% recycled fibers, including 10% post-consumer fibers.

IMPORTANT INFORMATION ABOUT THIS MANUAL

You will see various symbols in this manual. They are used in the following ways:

WARNING

This is used to indicate the presence of a hazard that could cause death or serious personal injury. To avoid or reduce the risk, the procedures must be followed precisely.

CAUTION

This is used to indicate the presence of a hazard that could cause minor or moderate personal injury or damage to your vehicle. To avoid or reduce the risk, the procedures must be followed carefully.

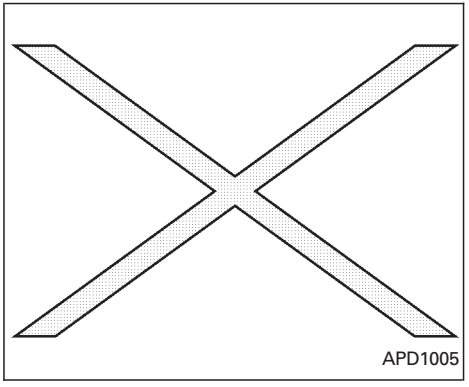

If you see this symbol, it means ‘‘Do not do this’’ or ‘‘Do not let this happen.’’

CALIFORNIA PROPOSITION 65 WARNING

WARNING

Engine Exhaust, some of its constituents, and certain vehicle components contain or emit chemicals known to State of California to cause cancer and birth defects or other reproductive harm.

© 2000 NISSAN NORTH AMERICA, INC.
GARDENA, CALIFORNIA

All rights reserved. No part of this Owner’s Manual may be reproduced or stored in a retrieval system, or transmitted in any form, or by any means, electronic, mechanical, photocopying, recording or otherwise, without the prior written permission of Nissan North America, Inc., Gardena, California.

Welcome To The World Of NISSAN

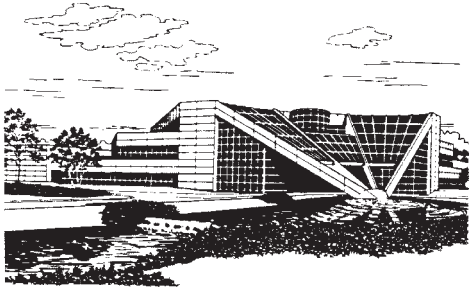

NISSAN TECHNICAL CENTER NORTH AMERICA, INC.
in Farmington Hills, Michigan

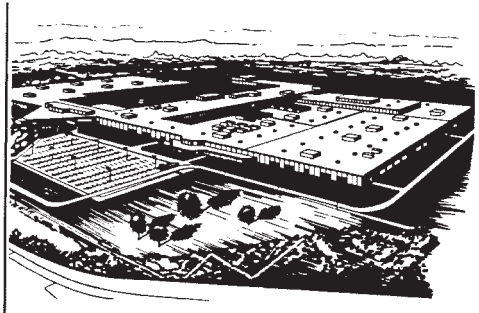

NISSAN MANUFACTURING FACILITY
in Smyrna, Tennessee

WFW0002

Your new NISSAN is the result of our dedication to produce the finest in safe, reliable and economical transportation. Your vehicle is the product of a successful worldwide company that manufactures cars and trucks in over 17 countries and distributes them in 170 nations.

NISSAN vehicles are designed and manufactured by Nissan Motor Co., Ltd. which was founded in Tokyo, Japan in 1933, and NISSAN affiliates world wide, collectively growing to become the fifth largest automaker in the world. In addition to cars and trucks, NISSAN also makes diversified forklift trucks, marine engines, boats and other products.

NISSAN has made a substantial and growing investment in North America. NISSAN's commitment is nearly $4 billion dollars in capital investments in facilities across the continent. Some of the facilities include the Nissan Manufacturing facility in Smyrna, Tennessee, vehicle styling design at Nissan Design International in San Diego, California, and engineering at Nissan Technical Center North America in Farmington Hills, Michigan. Additionally, NISSAN employs nearly 18,000 people throughout the United States, Canada, and Mexico. An additional 71,000 people work for the 1,500 NISSAN and INFINITI dealers across North America.

NISSAN is also a substantial contributor to the Canadian economy. Nissan Canada Inc., its suppliers and over 140 dealers employ approximately 4,500 people. These include company employees and the staffs of NISSAN dealers all across Canada. In addition, many Canadians work for companies that supply NISSAN and NISSAN dealers with materials and services ranging from the operation of port facilities and transportation services, to the supply of lubricants, parts and accessories.

NISSAN pioneered the use of electronics and computers in automobiles, and has led the industry in improving both performance and fuel efficiency through new engine designs and the use of synthetic materials to reduce vehicle weight. The company has also developed ways to build quality into its vehicles at each stage of the production process, both through extensive use of automation and — most importantly — through an awareness that **people** are the central element in quality control.

From the time the parts arrived from our suppliers until you took delivery of your new NISSAN, dozens of checks were made to ensure that only the best job was being done in producing and delivering your vehicle. NISSAN also takes great care to ensure that when you take your NISSAN to your dealer for maintenance, the service technician will perform his work according to the quality standards that have been established by Nissan.

Safety has also been built into your NISSAN. As you know, seat belts are an integral part of the safety systems that will help protect you and your passengers in the event of a sudden stop or an accident. We urge you to use the seat belts every time you drive the vehicle.

The NISSAN story of growth and achievement reflects our major goal: to provide you, our customer, with a vehicle that is built with quality and craftsmanship — a product that we can be proud to build and you can be proud to own.

NISSAN CUSTOMER CARE PROGRAM

NISSAN CARES ...

Both NISSAN and your NISSAN dealer are dedicated to serving all your automotive needs. Your satisfaction with your vehicle and your NISSAN dealer are our primary concerns. Your NISSAN dealer is always available to assist you with all your automobile sales and service needs.

However, if there is something that your NISSAN dealer cannot assist you with or you would like to provide NISSAN directly with comments or questions, please contact the NISSAN Consumer Affairs Department using our toll-free number:

For U.S. mainland and Alaska customers
1-800-NISSAN-1
(1-800-647-7261)

For Hawaii customers
(808) 836-0888 (Oahu Number)

For CANADIAN customers
1-800-387-0122

The Consumer Affairs Department will ask for the following information:

— Your name, address, and telephone number

— Vehicle identification number (on dashboard)

— Date of purchase

— Current odometer reading

— Your NISSAN dealer's name

— Your comments or questions

OR

You can write to NISSAN with the information on the left at:

For U.S. mainland and Alaska customers
Nissan North America Inc.
Consumer Affairs Department
P.O. Box 191
Gardena, California 90248-0191

For Hawaii customers
Nissan Motor Corporation in Hawaii
2880 Kilihau St.
Honolulu, Hawaii 96819

For Canadian customers
Nissan Canada Inc.
5290 Orbitor Drive
Mississauga, Ontario L4W 4Z5

We appreciate your interest in NISSAN and thank you for buying a quality NISSAN vehicle.

Table of Contents

Seats, restraints and supplemental air bag systems	1
Instruments and controls	2
Pre-driving checks and adjustments	3
Heater, air conditioner and audio systems	4
Starting and driving	5
In case of emergency	6
Appearance and care	7
Do-it-yourself	8
Maintenance	9
Technical and consumer information	10
Index	11

1 Seats, restraints and supplemental air bag systems

Seats 1-2
Front manual seat adjustment.....1-3
Front power seat adjustment (if so equipped).....1-4
Folding rear seat 1-6
Head restraint adjustment 1-8
Supplemental restraint system.....1-8
Precautions on supplemental restraint system 1-8
Supplemental air bag warning labels.....1-18
Supplemental air bag warning light.....1-19
Seat belts 1-20
Precautions on seat belt usage 1-20
Child safety.....1-22
Pregnant women 1-23
Injured persons.....1-23
Three-point type seat belt with retractor 1-23
Seat belt extenders 1-27
Seat belt maintenance 1-27
Child restraints 1-28
Precautions on child restraints.....1-28
Installation on rear seat center or outboard positions 1-29
Top tether strap child restraint 1-34
Installation on front passenger seat.....1-35

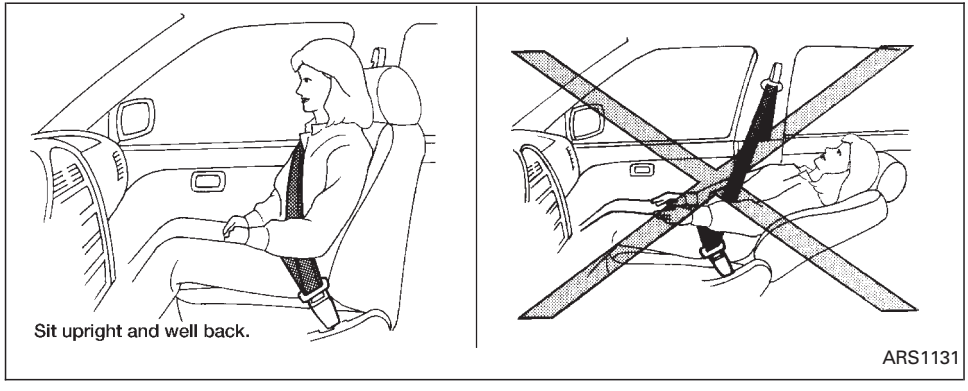

WARNING

- **Do not ride in a moving vehicle when the seatback is reclined. This can be dangerous. The shoulder belt will not be against your body. In an accident you could be thrown into it and receive neck or other serious injuries. You could also slide under the lap belt and receive serious internal injuries.**

- **For most effective protection when the vehicle is in motion, the seat should be upright. Always sit well back in the seat and adjust the seat properly. See ‘‘Precautions on Seat Belt Usage’’ later in this section.**

FRONT MANUAL SEAT ADJUSTMENT

WARNING

- **Do not adjust the driver's seat while driving so full attention may be given to vehicle operation. The seat may move suddenly and could cause loss of control of the vehicle.**
- **After adjustment, gently rock in the seat to make sure it is securely locked.**

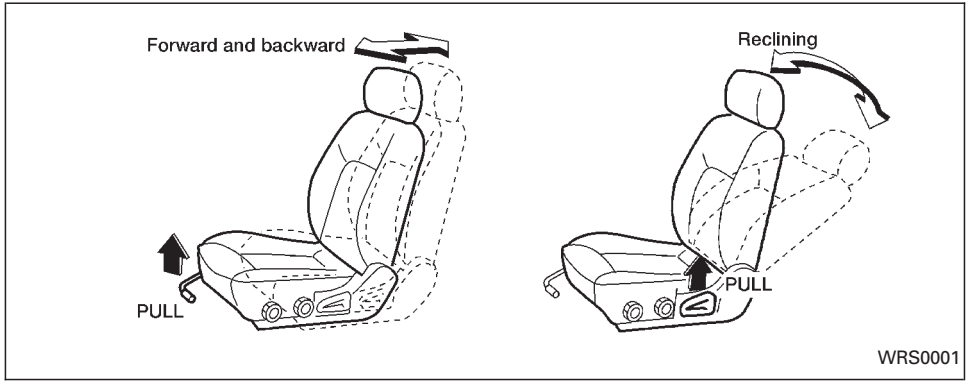

Forward and backward

Pull the lever up while you slide the seat forward or backward to the desired position. Release the lever to lock the seat in position.

Reclining

To recline the seatback, pull the lever up and lean back. To bring the seatback forward again, pull the lever and move your-body forward.

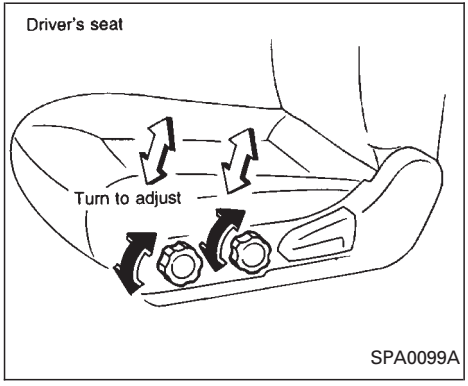

Seat lifter (Driver's seat)

Turn either dial to adjust the angle and height of the seat cushion to the desired position.

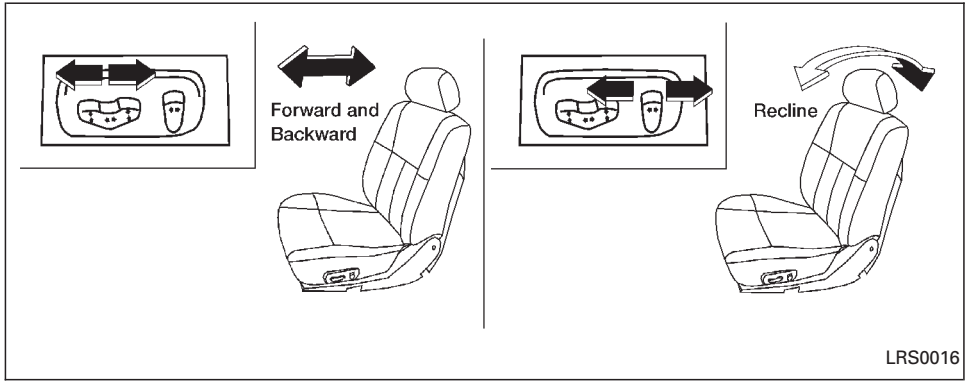

FRONT POWER SEAT ADJUSTMENT (if so equipped)

⚠ WARNING

- **Do not adjust the driver's seat while driving so full attention may be given to vehicle operation. The seat may move suddenly and could cause loss of control of the vehicle.**
- **Do not leave children unattended inside the vehicle. They could unknowingly activate switches or controls. Unattended children could become involved in serious accidents.**

Operating Tips

- The motor has an auto-reset overload protection circuit. If the motor stops during operation, wait 30 seconds, then reactivate the switch.

- Do not operate the power seat switch for a long period of time when the engine is off. This will discharge the battery.

Forward and backward

Moving the switch forward or backward will slide the seat forward or backward to the desired position.

Reclining

Move the recline switch backward until the desired angle is obtained. To bring the seatback forward again, move the switch forward and move your body forward. The seatback will move forward.

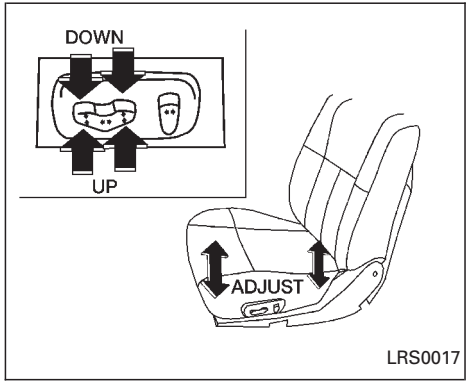

Seat lifter (if so equipped for driver's seat)

Push the front or rear end of the switch up or down to adjust the angle and height of the seat cushion.

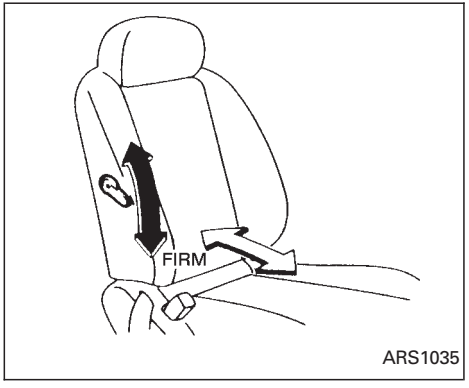

Lumbar support (if so equipped for driver's seat)

The lumbar support feature provides lower back support to the driver. Move the lever up or down to adjust the seat lumbar area.

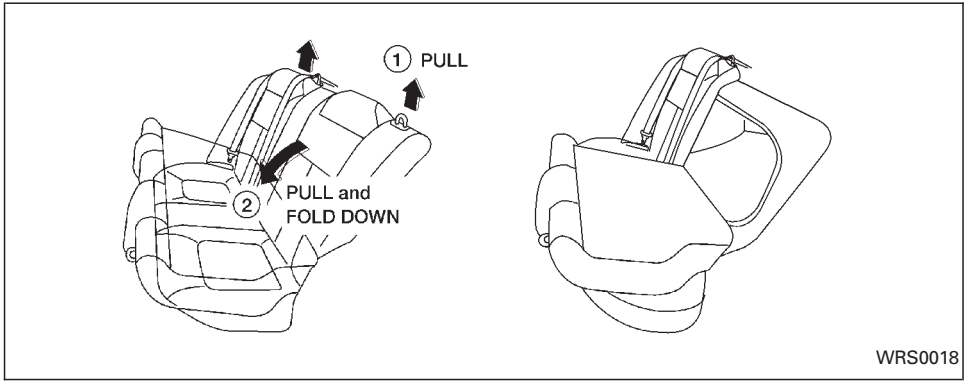

FOLDING REAR SEAT

Interior trunk access

The trunk can be accessed from the rear seat for loading and unloading, as shown.

WARNING

- **Never allow anyone to ride in the luggage area or on the rear seat when it is in the fold-down position. Use of these areas by passengers without proper restraints could result in serious injury in an accident or sudden stop.**
- **Properly secure all cargo to help prevent it from sliding or shifting. Do not place cargo higher than the seatbacks. In a sudden stop or collision, unsecured cargo could cause personal injury.**
- **When returning seatbacks to the upright position, be certain they are completely secured in the latched position. If they are not completely-secured in the latched position, passengers may be injured in an accident or sudden stop.**
- **Closely supervise children when they are around cars to prevent them from playing and becoming locked in the trunk where they could be seriously injured. Keep the car locked, with the rear seat back securely latched, when not in use, and prevent children's access to car keys.**

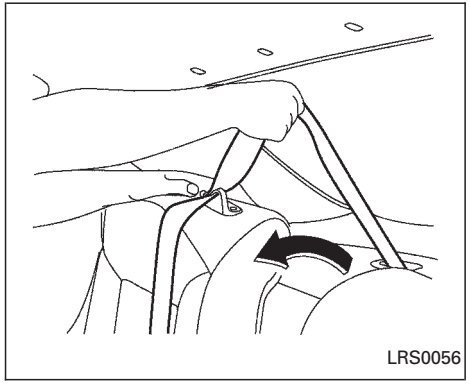

To fold down the seat back, pull approximately 10 inches of seat belt webbing out of the retractor and hold, then unlatch and fold down the seat back.

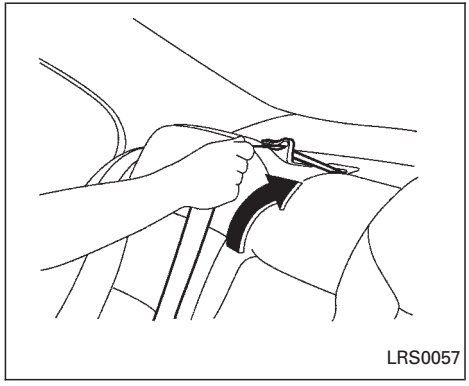

When using the fold down rear seat back, the rear center seat belt retractor may lock up and prevent folding down the seat back.

If the rear center seat belt retractor has inadvertently locked up, push the seat belt webbing towards the retractor as shown in the above illustration. This will unlock the seat belt retractor and allow the rear seat back to fold down.

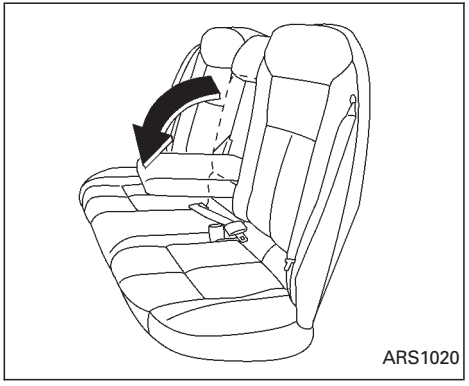

Center armrest (if so equipped)

Pull the armrest forward until it is horizontal.

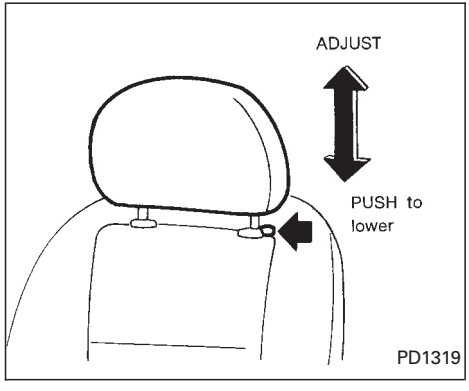

HEAD RESTRAINT ADJUSTMENT

To raise the head restraint, pull it up. To lower, push and hold the lock knob and push the head restraint down.

⚠ WARNING

Head restraints should be adjusted properly as they may provide significant protection against injury in an accident. Do not remove them. Check the adjustment after someone else uses the seat.

Adjust the head restraints so the top is level with the tops of your ears.

SUPPLEMENTAL RESTRAINT SYSTEM

PRECAUTIONS ON SUPPLEMENTAL RESTRAINT SYSTEM

This Supplemental Restraint System (SRS) section contains important information concerning the driver and passenger supplemental front air bags, supplemental side air bags and pre-tensioner seat belts.

Supplemental front air bag system: This system can help cushion the impact force to the face and chest of the driver and front passenger in certain frontal collisions.

Supplemental side air bag system (if so equipped): This system can help cushion the impact force to the head and the chest area of the driver and front passenger in certain side impact collisions The supplemental side air bag is designed to inflate on the side where the vehicle is impacted.

These supplemental restraint systems are designed to **supplement** the crash protection provided by the driver and front passenger seat belts and are **not a substitute** for them. Seat belts should always be correctly worn and the driver and front passenger seated a suitable distance away from the steering wheel, instrument panel and front door finishers. (See ‘‘Seat belts’’ later in this

section for instructions and precautions on seat belt usage.)

The supplemental air bags operate only when the ignition switch is in the ON or START position.

After turning the ignition key to the ON position, the supplemental air bag warning light illuminates. The supplemental air bag warning light will turn off after about 7 seconds if the system is operational.

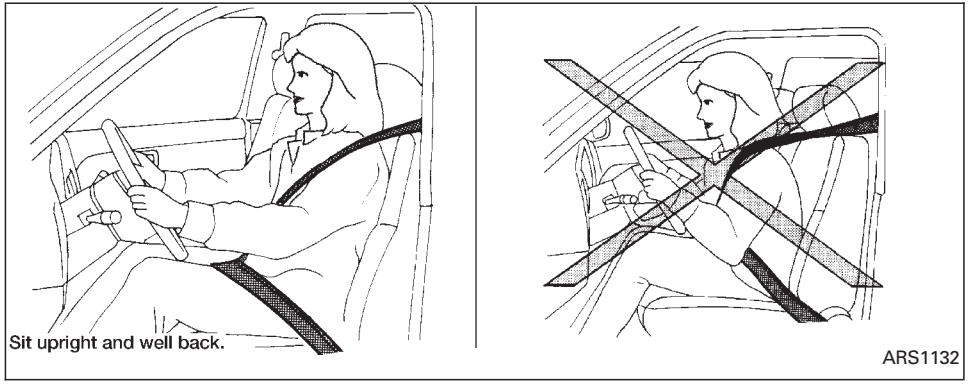

⚠ WARNING

- **The supplemental front air bags ordinarily will not inflate in the event of a side impact, rear impact, roll over, or lower severity frontal collision. Always wear your seat belts to help reduce the risk or severity of injury in various kinds of accidents.**
- **The seat belts and the supplemental front air bags are most effective when you are sitting well back and upright in the seat. The front air bags inflate with great force. If you are unrestrained, leaning forward, sitting sideways or out of position in any way, you are at greater risk of injury or death in a crash and may also receive serious or fatal injuries from the supplemental front air bag if you are up against it when it inflates. Always sit back against the seatback and as far away as practical from the steeringwheel or instrument panel. Always use the seat belts.**

- **Keep hands on the outside of the steering wheel. Placing them inside the steering wheel rim could increase the risk that they are injured when the supplemental front air bag inflates.**

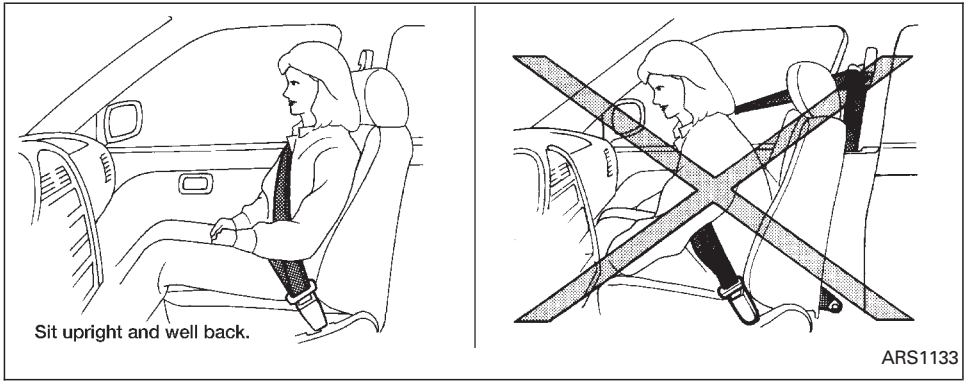

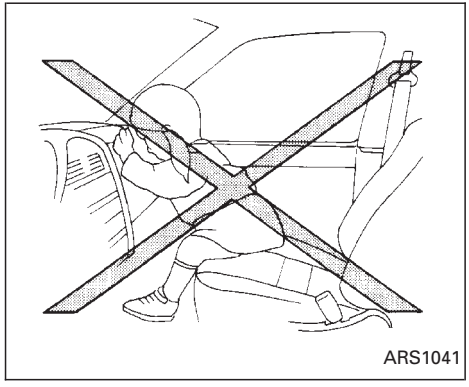
ARS1041

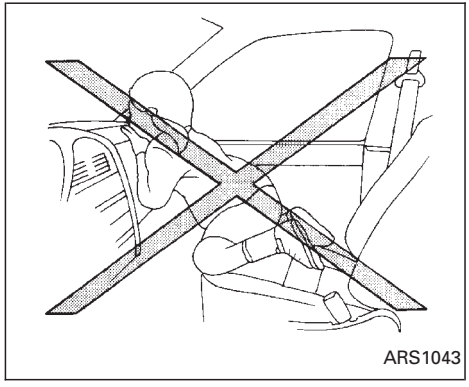
ARS1043

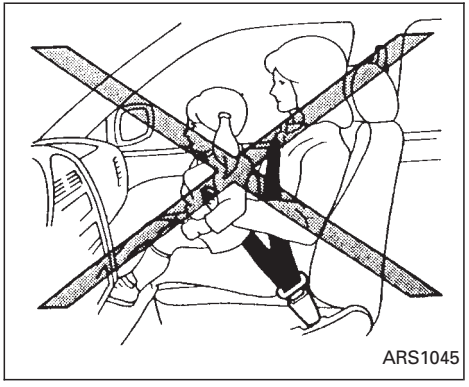
ARS1045

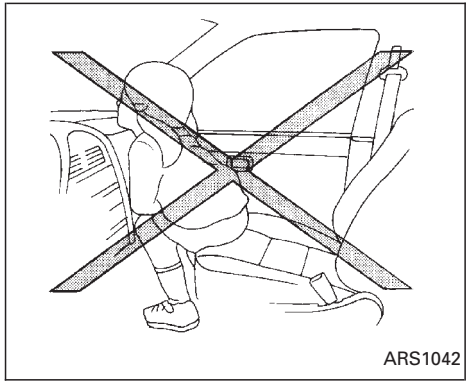
ARS1042

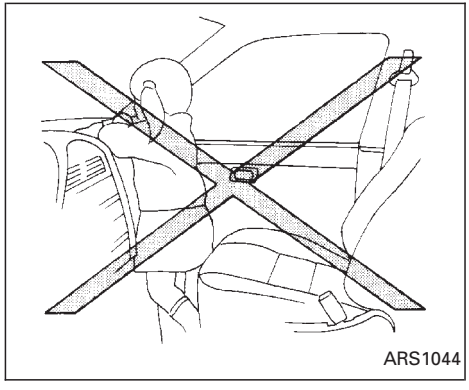
ARS1044

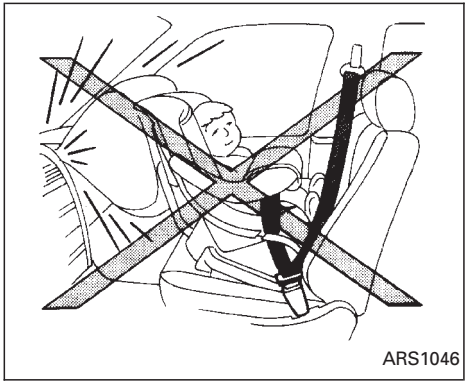
ARS1046

⚠ WARNING

- **Never let children ride unrestrained. Do not attempt to hold them in your lap or arms. Some examples of dangerous riding positions are shown in the illustrations.**
- **Children may be severely injured or killed when the supplemental front air bag inflates if they are not properly restrained.**
- **Never install a rear-facing child restraint in the front seat. An inflating supplemental front air bag could seriously injure or kill your child. See ‘‘Child restraints’’ later in this section for details.**

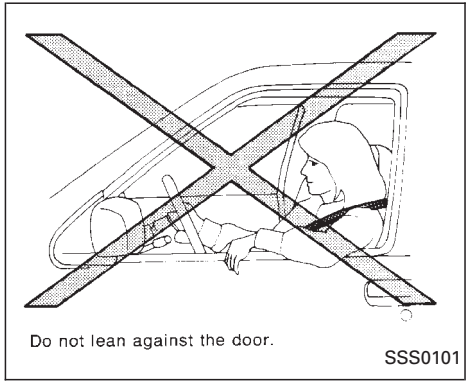

⚠ WARNING

Supplemental side air bag (if so equipped):

- **The supplemental side air bag ordinarily will not inflate in the event of a frontal impact, rear impact or lower severity side collision. Always wear your seat belt to help reduce the risk or severity of injury in various kinds of accidents.**

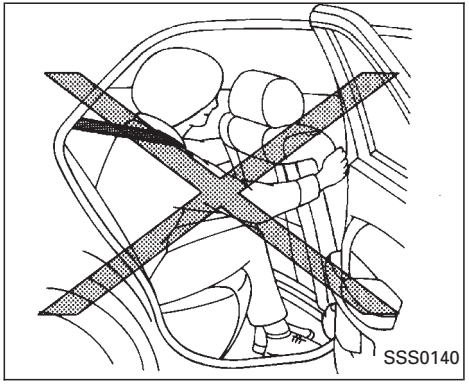

- **The seat belts and the supplemental side air bag are most effective when you are sitting well back and upright in the seat. The side air bag inflates with great force. Do not allow anyone to place their hand, leg or face near the side air bag on the side of the seatback of the front seat. Do not allow anyone sitting in the front seat to extend their hand out of the window or lean against the door. When sitting in the rear seat, do not hold onto the seatback of the front seat. If**

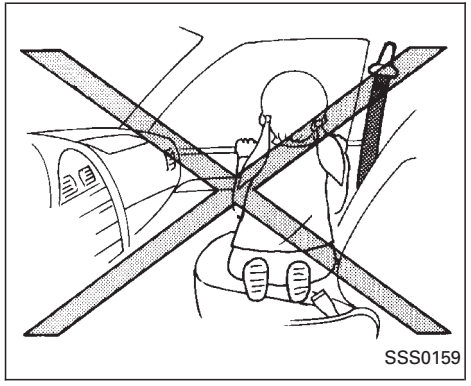

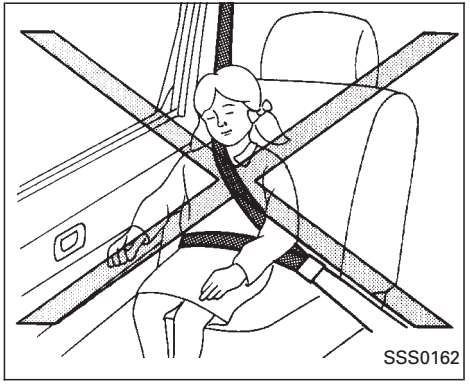

the side air bag inflates, the occupant may be seriously injured. Be especially careful with children, who should always be properly restrained. Some examples of dangerous riding positions are shown in the illustrations.

- **Do not use seat covers on the front seatbacks. They may interfere with supplemental side air bag inflation.**

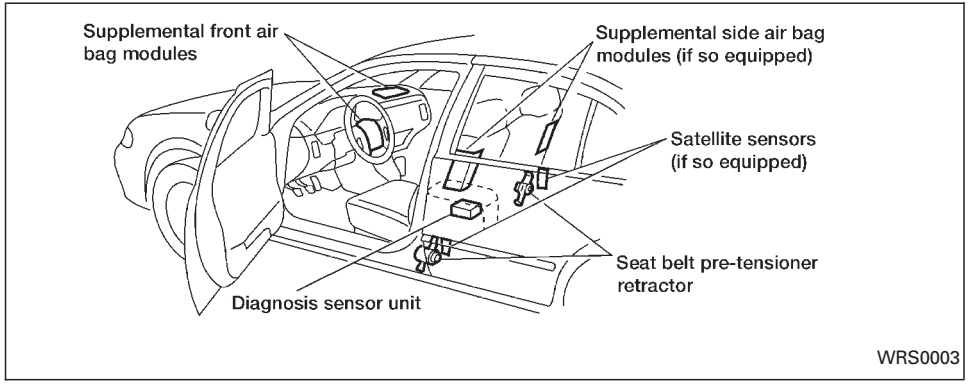

Supplemental front air bag system

The driver supplemental front air bag is located in the center of the steering wheel. The passenger supplemental front air bag is mounted in the dashboard above the glove box.

These systems are designed to meet optional certification requirements under U.S. regulations. They are also permitted in Canada. The optional certification allows the front air bags to be designed to inflate somewhat less forcefully than previously. **However, all of the information, cautions and warnings in this manual still apply and must be followed.**

The supplemental front air bag system is designed to inflate in higher severity frontal collisions, although it may inflate if the forces in another type of collision are similar to those of a higher severity frontal impact. It may not inflate in certain frontal collisions. Vehicle damage (or lack of it) is not always an indication of proper supplemental front air bag system operation.

When the supplemental front air bag inflates, a fairly loud noise may be heard, followed by the release of smoke. This smoke is not harmful and does not indicate a fire, but care should be taken to not intentionally inhale it, as it may cause irritation and choking. Those with a history of a breathing condition should get fresh air promptly.

The supplemental front air bags, along with the use of seat belts, help to cushion the impact force on the face and chest of the occupant. They can help save lives and reduce serious injuries. However, an inflating supplemental front air bag may cause facial abrasions or other injuries. Supplemental front air bags do not provide restraint to the lower body.

Seat belts should be correctly worn and the driver and passenger seated upright as far as practical away from the steering wheel or instrument panel. Since the supplemental front air bags inflate quickly in order to help protect the front occupants, the force of the supplemental front air bag inflating can increase the risk of injury if the occupant is too close to or is against the supplemental front air bag module during inflation.

The supplemental front air bags deflate quickly after a collision.

The supplemental front air bags operate only when the ignition switch is in the ON or START position.

After turning the ignition key to the ON position, the supplemental air bag warning light illuminates. The supplemental air bag warning light will turn off after about 7 seconds if the system is operational.

⚠ WARNING

- **Do not place any objects on the steering wheel pad or on the instrument panel. Also, do not place any objects between any occupant and the steering wheel or instrument panel. Such objects may become dangerous projectiles and cause injury if the supplemental front air bag inflates.**
- **Right after inflation, several supplemental front air bag system components will be hot. Do not touch them; you may severely burn yourself.**
- **No unauthorized changes should be made to any components or wiring of the supplemental front air bag system. This is to prevent accidental inflation of the supplemental front air bags or damage to the supplemental front air bag system.**
- **Do not make unauthorized changes to your vehicle's electrical system, suspension system or front end structure. This could affect proper operation of the supplemental front air bag system.**
- **Tampering with the supplemental front air bag system may result in serious personal injury. Tampering includes changes to the steering wheel and the instrument panel assembly by placing material over the steering wheel pad and above the dashboard, or by installing additional trim material around the supplemental front air bag system.**
- **Work around and on the supplemental front air bag system should be done by an authorized NISSAN dealer. Installation of electrical equipment should also be done by an authorized NISSAN dealer. The yellow SRS wiring should not be modified or disconnected. Unauthorized electrical test equipment and probing devices should not be used on the supplemental front air bag system.**
- **The SRS wiring harnesses are covered with yellow insulation either just before the harness connectors or over the complete harness for easy identification.**

When selling your vehicle, we request that you inform the buyer about the supplemental front air bag system and guide the buyer to the appropriate sections in this owner's manual.

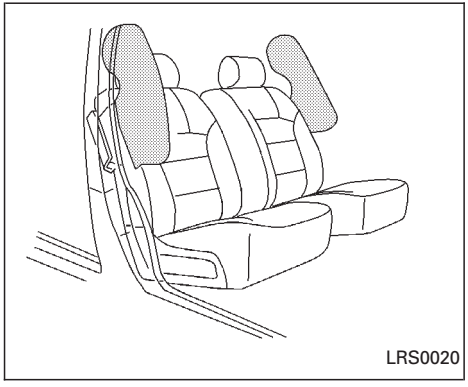

Supplemental side air bag system (if so equipped)

The supplemental side air bags are located in the outside of the seatback of the front seats. The supplemental side air bag (on the driver or front passenger seat) is designed to inflate in higher severity side collisions, although it may inflate if the forces in another type of collision are similar to those of a higher severity side impact. It is designed to inflate on the side where the vehicle is impacted. It may not inflate in certain side collisions. Vehicle damage (or lack of it) is not always an indication of proper supplemental side air bag operation.

When the supplemental side air bag inflates, a fairly loud noise may be heard, followed by release of smoke. This smoke is not harmful and does not indicate a fire, but care should be taken to not intentionally inhale it, as it may cause irritation and choking. Those with a history of a breathing condition should get fresh air promptly.

Supplemental side air bags along with the use of seat belts, help to cushion the impact force on the chest of the front occupants. They can help save lives and reduce serious injuries. However, an inflating side air bag may cause abrasions or other injuries.

The seat belts should be correctly worn and the driver and passenger seated upright as far as practical away from the supplemental side air bag. Since the side air bag inflates quickly in order to help protect the front occupants, the force of the side air bag inflating can increase the risk of injury if the occupant is too close to or is against the side air bag module during inflation. The side air bag will deflate quickly after the collision is over.

The supplemental side air bags operate only when the ignition switch is in the ON or START position.

After turning the ignition key to the ON position, the supplemental air bag warning light illuminates. The supplemental air bag warning light will turn off after about 7 seconds if the system is operational.

⚠ WARNING

- **Do not place any objects near the seatback of the front seats. Also, do not place any objects (an umbrella, bag, etc.) between the front door finisher and the front seat. Such objects may become dangerous projectiles and cause injury if the supplemental side air bag inflates.**
- **Right after inflation, several supplemental side air bag system components will be hot. Do not touch them; you may severely burn yourself.**
- **No unauthorized changes should be made to any components or wiring of the supplemental side air bag system. This is to prevent accidental**

inflation of the side air bag or damage to the side air bag system.

- **Do not make unauthorized changes to your vehicle's electrical system, suspension system or side panel. This could affect proper operation of the side air bag system.**
- **Tampering with the supplemental side air bag system may result in serious personal injury. Tampering includes changes to the front seats assembly by placing material near the seatback of the front seat, or by installing additional trim material, such as seat covers, around the side air bag system.**
- **Work around and on the supplemental side air bag system should be done by an authorized NISSAN dealer. Installation of electrical equipment should also be done by an authorized NISSAN dealer. The SRS wiring harnesses* should not be modified or disconnected. Unauthorized electrical test equipment and probing devices should not be used on the side air bag system.**

*** The SRS wiring harnesses are covered with yellow insulation either just before the harness connectors or over the complete harness for easy identification.**

When selling your vehicle, we request that you inform the buyer about the supplemental side air bag system and guide the buyer to the appropriate sections in this Owner's Manual.

Pre-tensioner seat belt system (For front seats)

⚠ WARNING

- **The pre-tensioner seat belt cannot be reused after activation. It must be replaced together with the retractor as a unit.**
- **If the vehicle becomes involved in a frontal collision but the pre-tensioner is not activated, be sure to have the pre-tensioner system checked and, if necessary, replaced by your NISSAN dealer.**
- **No unauthorized changes should be made to any components or wiring of the pre-tensioner seat belt system. This is to prevent accidental activation of the pre-tensioner seat belt or damage to the pre-tensioner seat belt operation. Tampering with the pre-tensioner seat belt system may result in serious personal injury.**
- **Work around and on the pre-tensioner system should be done by an authorized NISSAN dealer. Installation of electrical equipment should also be done by an authorized NISSAN dealer. Unauthorized electrical test equipment and probing devices should not be used on the pre-tensioner seat belt system.**
- **If you need to dispose of the pre-tensioner or scrap the vehicle, contact an authorized NISSAN dealer. Correct pre-tensioner disposal procedures are set forth in the appropriate NISSAN Service Manual. Incorrect disposal procedures could cause personal injury.**

The front seat pre-tensioner seat belt system activates in conjunction with the supplemental front air bag. Working with the seat belt retractor, it helps tighten the seat belt the instant the vehicle becomes involved in certain types of collisions, thereby restraining seat occupants.

The pre-tensioner is encased with the seat belt's retractor. These seat belts are used the same as conventional seat belts.

When the pre-tensioner seat belt activates, smoke is released and a loud noise may be heard. The smoke is not harmful, but care should be taken not to inhale it as it may cause irritation and choking.

If any abnormality occurs in the pre-tensioner system, the supplemental air bag warning light will flash intermittently after the ignition key is turned to the ON or START position. In this case, the pre-tensioner seat belt will not function properly.

When selling your vehicle, we request that you inform the buyer about the pre-tensioner seat belt system and guide the buyer to the appropriate sections in this owner's manual.

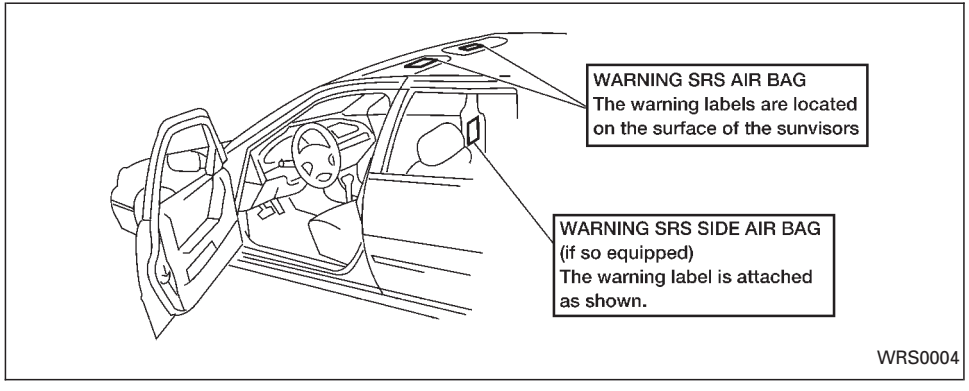

SUPPLEMENTAL AIR BAG WARNING LABELS

Warning labels about the supplemental air bag systems are placed in the vehicle as shown in the illustration.

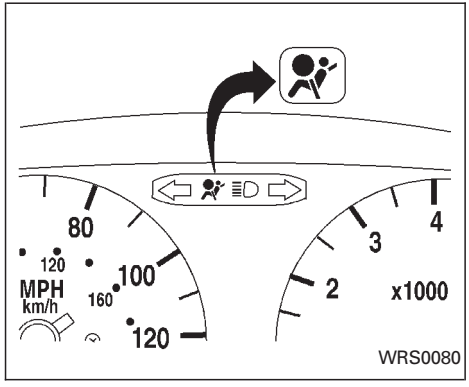

SUPPLEMENTAL AIR BAG WARNING LIGHT

The supplemental air bag warning light, displaying in the instrument panel, monitors the circuits of the supplemental front air bag, supplemental side air bag (if so equipped) and pre-tensioner seat belt systems. The circuits monitored by the supplemental air bag warning light are the diagnosis sensor unit, satellite sensors, front air bag modules, side air bag modules, pre-tensioner seat belts and all related wiring.

When the ignition key is in the ON or START position, the supplemental air bag warning light illuminates for about 7 seconds and then turns off. This means the system is operational.

If any of the following conditions occur, the supplemental front air bag, supplemental side air bag (if so equipped) and pre-tensioner seat belt systems need servicing:

- The supplemental air bag warning light remains on after approximately 7 seconds.
- The supplemental air bag warning light flashes intermittently.
- The supplemental air bag warning light does not come on at all.

Under these conditions, the supplemental front air bag, supplemental side air bags (if so equipped) or pre-tensioner seat belt systems may not operate properly. It must be checked and repaired. Take your vehicle to the nearest authorized NISSAN dealer.

⚠ WARNING

If the supplemental air bag warning light is on, it could mean that the supplemental front air bag, supplemental side air bag system (if so equipped) or pre-tensioner seat belt systems will not operate in an accident.

Repair and replacement procedure

The supplemental front air bag modules or supplemental side air bags are designed to inflate on a one-time-only basis. As a reminder, unless it is damaged, the supplemental air bag light remains illuminated after inflation has occurred. Repair and replacement of these supplemental air bag systems should be done only by an authorized NISSAN dealer.

To ensure long-term functioning, these supplemental air bag systems must be inspected 10 years after the date of manufacture as noted on the certification label located on the driver side front pillar.

When maintenance work is required on the vehicle, the supplemental front air bags, supplemental side air bags and related parts should be pointed out to the person conducting the maintenance. The ignition key should always be in the LOCK position

when working under the hood or inside the vehicle.

⚠ WARNING

- **Once the supplemental front air bag or supplemental side air bag has inflated, the air bag module will not function again and must be replaced. The air bag module should be replaced by an authorized NISSAN dealer. The air bag module cannot be repaired.**
- **The supplemental front air bag and supplemental side air bag systems should be inspected by an authorized NISSAN dealer if there is any damage to the front end or side portion of the vehicle.**
- **If you need to dispose of a supplemental air bag or scrap the vehicle, contact an authorized NISSAN dealer. Correct supplemental air bag disposal procedures are set forth in the appropriate NISSAN Service Manual. Incorrect disposal procedures could cause personal injury.**

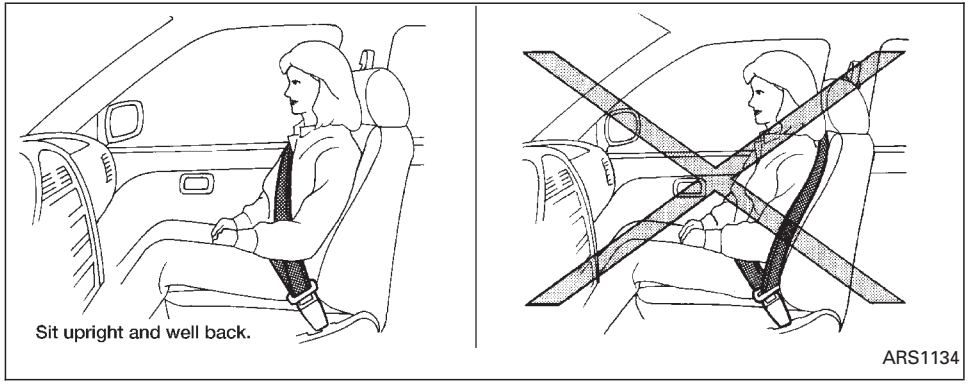

PRECAUTIONS ON SEAT BELT USAGE

If you are wearing your seat belt properly adjusted, your chances of being injured or killed in an accident and/or the severity of injury may be greatly reduced. NISSAN strongly encourages you and all of your passengers to buckle up every time you drive, even if your seating position includes a supplemental air bag.

Most U.S. states and all Canadian provinces and territories, require that seat belts be worn at all times when a vehicle is being driven.

⚠ WARNING

- **Every person who drives or rides in this vehicle should use a seat belt at all times. Children should be properly restrained and, if appropriate, in a child restraint.**
- **The belt should be properly adjusted to a snug fit. Failure to do so may reduce the effectiveness of the entire restraint system and increase the chance or severity of injury in an accident. Serious injury or death can occur if the seat belt is not worn properly.**

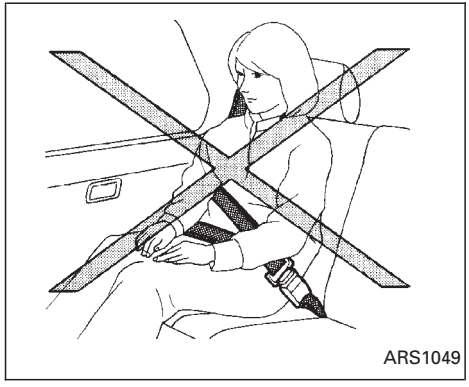

- **Always route the shoulder belt over your shoulder and across your chest. Never run the belt behind your back, under your arm or across your neck. The belt should be away from your face and neck, but not falling off your shoulder.**
- **Position the lap belt as low and snug as possible AROUND THE HIPS, NOT THE WAIST. A lap belt worn too high could increase the risk of internal injuries in an accident.**

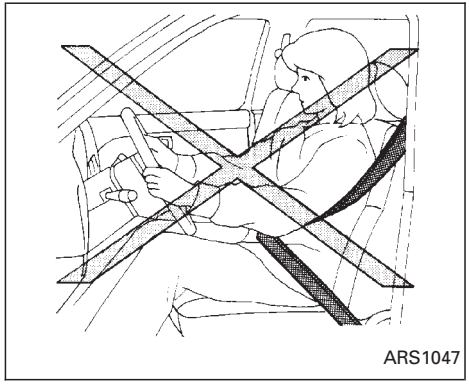

- **Be sure the seat belt tongue is securely fastened to the proper buckle.**
- **Do not wear the belt inside out or twisted. Doing so may reduce its effectiveness.**
- **Do not allow more than one person to use the same belt.**
- **Never carry more people in the vehicle than there are seat belts.**

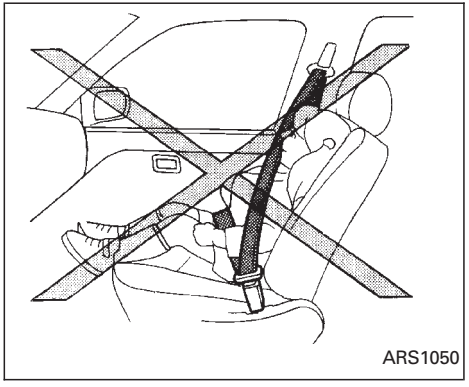

- **If the seat belt warning light glows continuously while the ignition is turned ON with all doors closed and all seat belts fastened, it may indicate a malfunction in the system. Have the system checked by an authorized NISSAN dealer.**
- **Once the pre-tensioner seat belt has activated, it cannot be reused and must be replaced together with the retractor. See you NISSAN dealer.**

- **Removal and installation of the pretensioner seat belt system components should be done by an authorized NISSAN dealer.**
- **All seat belt assemblies including retractors and attaching hardware should be inspected after any collision by an authorized NISSAN dealer. NISSAN recommends that all seat belt assemblies in use during a collision be replaced unless the collision was minor and the belts show no damage and continue to operate properly. Seat belt assemblies not in use during a collision should also be inspected and replaced if either damage or improper operation is noted.**

CHILD SAFETY

Children need adults to help protect them. They need to be properly restrained.

The proper restraint depends on the child's size. Generally, infants up to about 1 year and less than 20 pounds, (9 kg) should be placed in rear facing child restraints. Forward facing child restraints are available for children who outgrow rear facing child restraints.

⚠ WARNING

Infants and children need special protection. The vehicle's seat belts may not fit them properly. The shoulder belt may come too close to the face or neck. The lap belt may not fit over their small hip bones. In an accident, an improperly fitting seat belt could cause serious or fatal injury. Always use appropriate child restraints.

All U.S. states and Canadian provinces or territories require the use of approved child restraints for infants and small children. See ''Child Restraints'' later in this section.

In addition, there are many types of child restraints available for larger children which should be used for maximum protection.

NISSAN recommends that all pre-teens and children be restrained in the rear seat if possible. According to accident statistics, children are safer when properly restrained in the rear seat than in the front seat. This is especially important because your vehicle has a supplemental restraint system (Air bag system) for the front passenger. See ''Supplemental restraint system'' earlier in this section.

Infants and small children

NISSAN recommends that infants and small children be placed in child restraints that comply with Federal Motor Vehicle Safety Standards or Canadian Motor Vehicle Safety Standards. You should choose a child restraint that fits your vehicle and always follow the manufacturer's instructions for installation and use.

Larger children

Children who are too large for child restraints should be seated and restrained by the seat belts which are provided.

If the child's seating position has a shoulder belt that fits close to the face or neck, the use of a booster seat (commercially avail-

able) may help overcome this. The booster seat should raise the child so that the shoulder belt is properly positioned across the top, middle portion of the shoulder and the lap belt is low on the hips. The booster seat should fit the vehicle seat and have a label certifying that it complies with Federal Motor Vehicle Safety Standards or Canadian Motor Vehicle Safety Standards. Once the child has grown so the shoulder belt is no longer on or near the face and neck, use the shoulder belt without the booster seat.

WARNING

Never let a child stand or kneel on any seat and do not allow a child in the cargo areas while the vehicle is moving. The child could be seriously injured or killed in an accident.

PREGNANT WOMEN

NISSAN recommends that pregnant women use seat belts. The seat belt should be worn snug, and always position the lap belt as low as possible around the hips, not the waist. Place the shoulder belt over your shoulder and across your chest. Never run the lap/shoulder belt over your abdominal area. Contact your doctor for specific recommendations.

INJURED PERSONS

NISSAN recommends that injured persons use seat belts. Check with your doctor for specific recommendations.

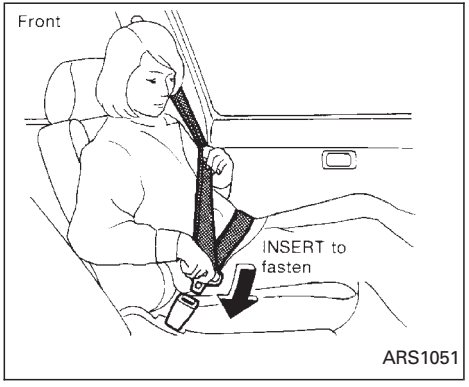

THREE-POINT TYPE SEAT BELT WITH RETRACTOR

WARNING

- **Every person who drives or rides in this vehicle should use a seat belt at all times.**

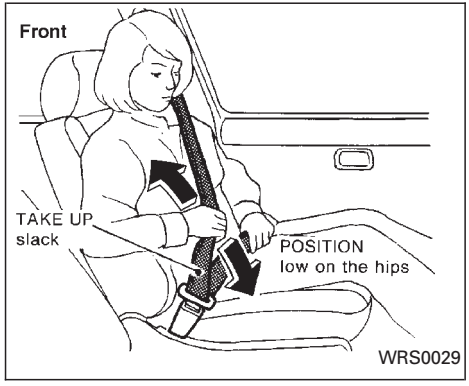

- **Do not ride in a moving vehicle when the seatback is reclined. This can be dangerous. The shoulder belt will not be against your body. In an accident you could be thrown into it and receive neck or other serious injuries. You could also slide under the lap belt and receive serious internal injuries.**

- **For most effective protection when the vehicle is in motion, the seat should be upright. Always sit well back in the seat and adjust the seat properly. See “Precautions on seat belt usage” earlier in this section.**

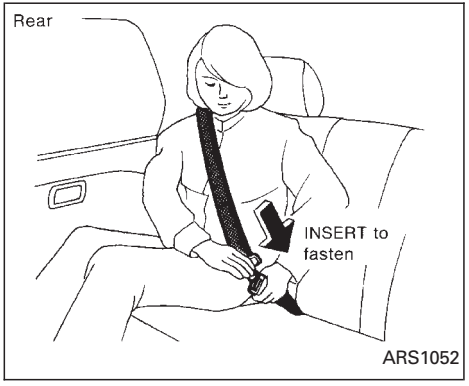

Fastening the seat belts

1. Adjust the seat.
2. Slowly pull the seat belt out of the retractor and insert the tongue into the buckle until you hear and feel the latch engage.

The retractor is designed to lock during a sudden stop or on impact. A slow pulling motion permits the seat belt to move, and allows you some freedom of movement in the seat.

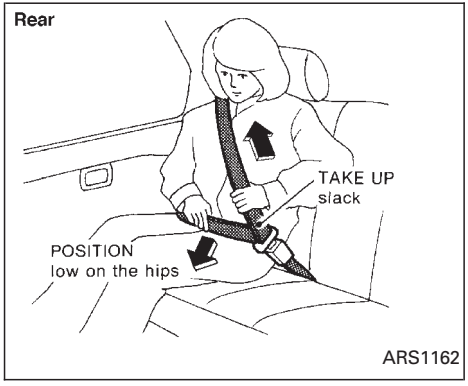

3. Position the lap belt portion **low and snug on the hips** as shown.
4. Pull the shoulder belt portion toward the retractor to take up extra slack.

The front passenger seat belt and the rear three-point seat belts have a cinching mechanism for child restraint installation. It is referred to as the automatic locking mode.

When automatic locking mode is activated the seat belt cannot be withdrawn further until the seat belt tongue is detached from the buckle and fully retracted. Once retracted, the seat belt is in the emergency locking mode. See ‘‘Child Restraints’’ later in this section for more information.

The automatic locking mode should be used only for child restraint installation. During normal seat belt use by a passenger, the locking mode should not be activated. If it is activated it may cause uncomfortable seat belt tension.

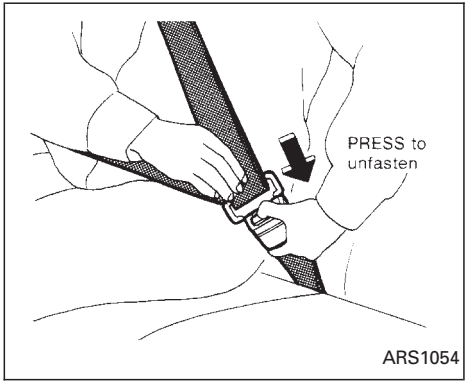

Unfastening the seat belts

To unfasten the seat belt, press the button on the buckle. The seat belt automatically retracts.

Checking seat belt operation

Seat belt retractors are designed to lock seat belt movement using two separate methods:

1) When the seat belt is pulled quickly from the retractor.

2) When the vehicle slows down rapidly.

To increase your confidence in the seat belts, check their operation as follows.

- Grasp the shoulder belt and pull quickly forward. The retractor should lock and restrict further belt movement.

If the retractor does not lock during this check or if you have any questions about belt operation, see an authorized NISSAN dealer.

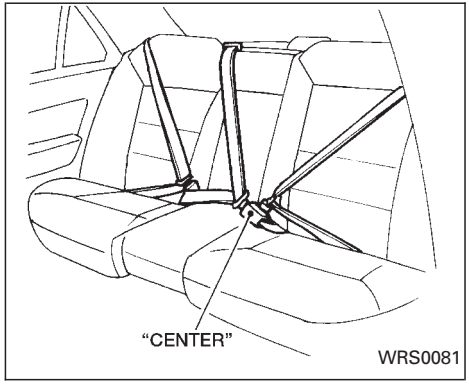

Center of rear seat

Selecting correct set of seat belts:

The center seat belt buckle is identified by the CENTER mark. The center seat belt tongue can be fastened **only** into the center seat belt buckle.

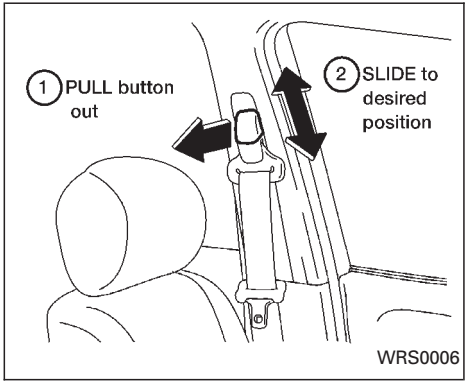

Shoulder belt height adjustment (For front seats)

The shoulder belt anchor height should be adjusted to the position best for you. (See ''Precautions on seat belt usage'' earlier in this section.) To adjust, pull out the adjustment button and move the shoulder belt anchor to the desired position, so the belt passes over the center of the shoulder. The belt should be away from your face and neck, but not falling off of your shoulder. Release the adjustment button to lock the shoulder belt anchor into position.

WARNING

- **After adjustment, release the adjustment button and try to move the shoulder belt anchor up and down to make sure it is securely fixed in position.**
- **The shoulder belt anchor height should be adjusted to the position best for you. Failure to do so may reduce the effectiveness of the entire restraint system and increase the chance or severity of injury in an accident.**

SEAT BELT EXTENDERS

If, because of body size or driving position, it is not possible to properly fit the lap-shoulder belt and fasten it, an extender is available which is compatible with the installed seat belts. The extender adds approximately 8 inches (200 mm) of length and may be used for either the driver or front passenger seating position. See your NISSAN dealer for assistance if an extender is required.

WARNING

- **Only NISSAN seat belt extenders, made by the same company which made the original equipment seat belts, should be used with NISSAN seat belts.**
- **Persons who can use the standard seat belt should not use an extender. Such unnecessary use could result in serious personal injury in the event of an accident.**

SEAT BELT MAINTENANCE

- **To clean the seat belt webbings,** apply a mild soap solution or any solution recommended for cleaning upholstery or carpet. Then wipe with a cloth and allow the seat belts to dry in the shade. Do not allow the seat belts to retract until they are completely dry.
- **If dirt builds up on the shoulder belt guide** of the seat belt anchors, the seat belts may retract slowly. Wipe the shoulder belt guide with a clean, dry cloth.
- **Periodically check to see that the seat belt and the metal components,** such as buckles, tongues, retractors, flexible wires and anchors, work properly. If loose parts, deterioration, cuts or other damage on the webbing is found, the entire seat belt assembly should be replaced.

PRECAUTIONS ON CHILD RESTRAINTS

WARNING

- **Infants and small children should always be placed in an appropriate child restraint while riding in the vehicle. Failure to use a child restraint can result in serious injury or death.**
- **Infants and small children should never be carried on your lap. It is not possible for even the strongest adult to resist the forces of a severe accident. The child could be crushed between the adult and parts of the vehicle. Also, do not put the same seat belt around both your child and yourself.**
- **Never install a rear-facing child restraint in the front seat. An inflating supplemental front air bag could seriously injure or kill your child. A rear-facing child restraint must only be used in the rear seat.**
- **Nissan recommends that the child restraint be installed in the rear seat. According to accident statistics, children are safer when properly restrained in the rear seat than in the front seat.**
- **An improperly installed child restraint could lead to serious injury or death in an accident.**
- **In general, child restraints are designed to be installed with a lap belt or the lap portion of a three-point type seat belt.**

Child restraints for infants and children of various sizes are offered by several manufacturers. When selecting any child restraint, keep the following points in mind:

1) Choose only a restraint with a label certifying that it complies with Federal Motor Vehicle Safety Standard 213 or Canadian Motor Vehicle Safety Standard 213.
2) Check the child restraint in your vehicle to be sure it is compatible with the vehicle's seat and seat belt system. Choose a child restraint that meets the guidelines of the Society of Automotive Engineers recommended practice J1819 for child restraint installation.
3) If the child restraint is compatible with your vehicle, place your child in the child restraint and check the various adjustments to be sure the child restraint is compatible with your child. Always follow all recommended procedures.

All U.S. states and provinces of Canada require that infants and small children be restrained in approved child restraints at all times while the vehicle is being operated.

WARNING

- **Improper use of a child restraint can result in increased injuries for both the infant or child and other occupants in the vehicle.**
- **Follow all of the child restraint manufacturer's instructions for installation and use. When purchasing a child restraint, be sure to select one which will fit your child and vehicle. It may not be possible to properly install some types of child restraints in your vehicle.**
- **If the child restraint is not anchored properly, the risk of a child being injured in a collision or a sudden stop greatly increases.**

- **Adjustable seatbacks should be positioned to fit the child restraint, but as upright as possible.**
- **After attaching the child restraint, test it before you place the child in it. Tilt it from side to side. Try to tug it forward and check to see if the belt holds the restraint in place. If the restraint is not secure, tighten the belt as necessary, or put the restraint in another seat and test it again.**
- **For a front-facing child restraint, if the seat position where it is installed has a three-point type lap/shoulder belt, check to make sure the shoulder belt does not go in front of the child's face or neck. If it does, put the shoulder belt behind the child restraint. If you must install a front-facing child restraint in the front seat, see ''Installation on front passenger seat'' later in this section for details.**
- **When your child restraint is not in use, keep it secured with a seat belt to prevent it from being thrown around in case of a sudden stop or accident.**

⚠ CAUTION

Remember that a child restraint left in a closed vehicle can become very hot. Check the seating surface and buckles before placing your child in the child restraint.

INSTALLATION ON REAR SEAT CENTER OR OUTBOARD POSITIONS

⚠ WARNING

- **The three-point belt in your vehicle is equipped with a locking mode retractor which must be used when installing a child restraint.**
- **Failure to use the retractor's locking mode will result in the child restraint not being properly secured. The restraint could tip over or otherwise be unsecured and cause injury to the child in a sudden stop or collision.**

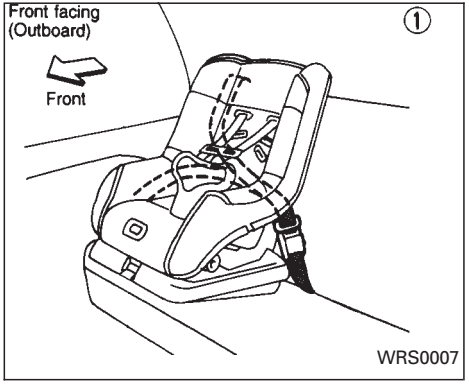

Front facing

When you install a child restraint in the rear seat, follow these steps:

1. Position the child restraint on the seat. It can be placed in a front facing direction, depending on the size of the child. Always follow the restraint manufacturer's instructions.

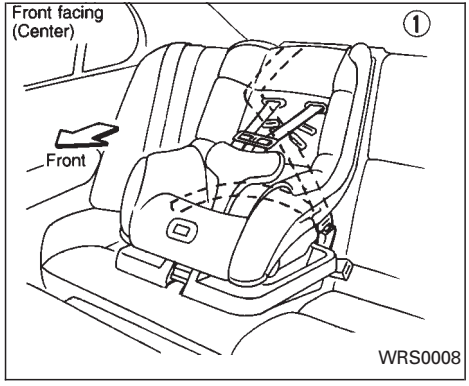

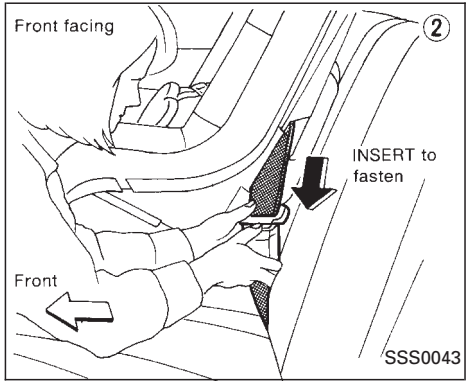

2. Route the seat belt tongue through the child restraint and insert it into the buckle until you hear and feel the latch engage.

   Be sure to follow the child restraint manufacturer's instructions for belt routing.

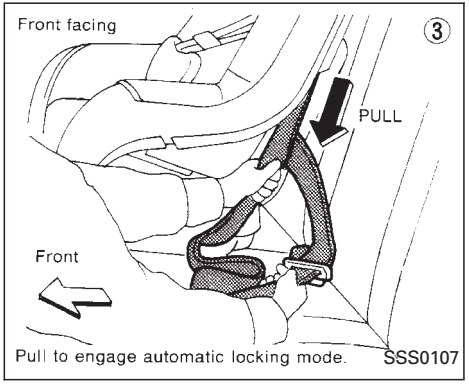

3. Pull on the shoulder belt until all of the belt is fully extended. At this time, the seat belt retractor is in the automatic locking mode (child restraint mode). It reverts back to emergency locking mode when the seat belt is fully retracted.

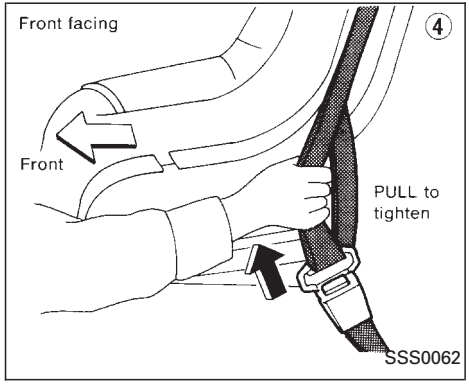

4. Allow the seat belt to retract. Pull up on the seat belt to remove any slack in the belt.

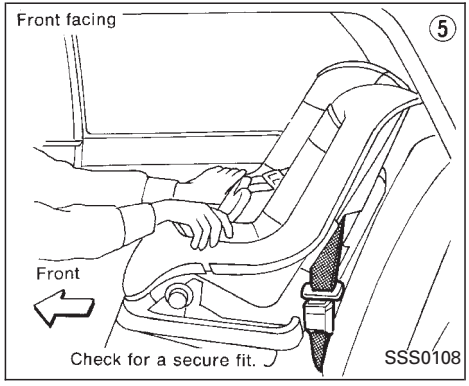

5. Before placing the child in the child restarint, use force to tilt the child restraint from side to side, and tug it forward to make sure that it is securely held in place.
6. Check that the retractor is in the automatic locking mode by trying to pull more seat belt out of the retractor. If you cannot pull any more belt webbing out of the retractor, the seat belt is in the automatic locking mode.
7. Check to make sure that the child restraint is properly secured prior to each use. If the belt is not locked, repeat steps three through six.

After the child restraint is removed and the seat belt is allowed to wind back into the retractor, the automatic locking mode (child restraint mode) is canceled.

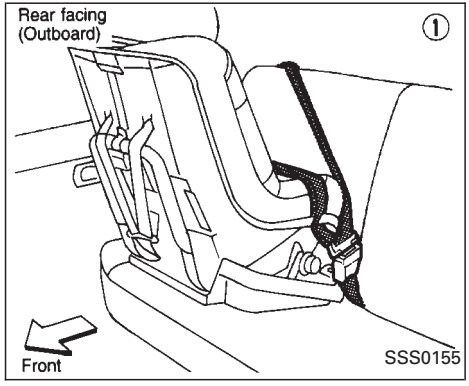

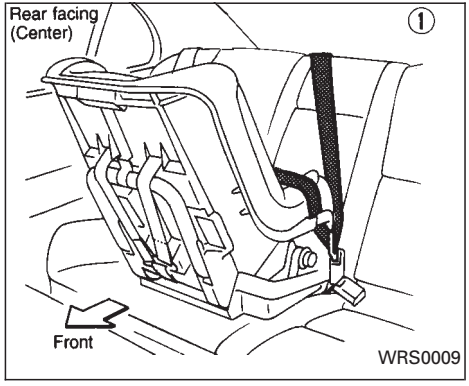

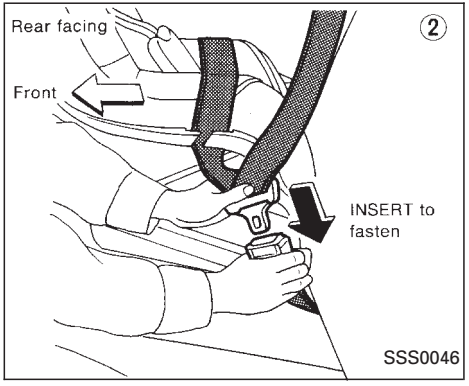

Rear facing

When you install a child restraint in the rear seat, follow these steps:

1. Position the child restraint on the seat. The direction of the child restraint depends on the type of the child restraint and the size of the child. Always follow the restraint manufacturer's instructions.
2. Route the seat belt tongue through the child restraint and insert it into the buckle until you hear and feel the latch engage.

   Be sure to follow the child restraint manufacturer's instructions for belt routing.

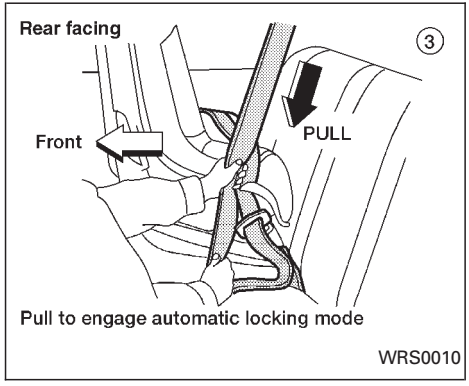

3. Pull on the shoulder belt until all of the belt is fully extended. At this time, the seat belt retractor is in the automatic locking mode (child restraint mode). It reverts back to emergency locking mode when the seat belt is fully retracted.

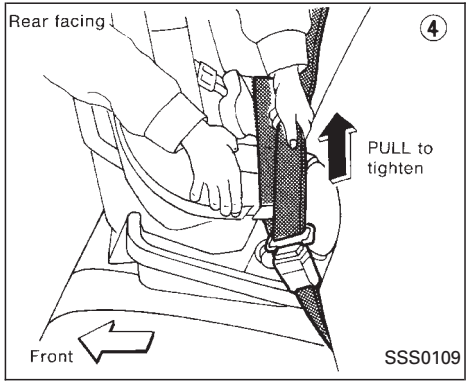

4. Allow the seat belt to retract. Pull up on the seat belt to remove any slack in the belt.

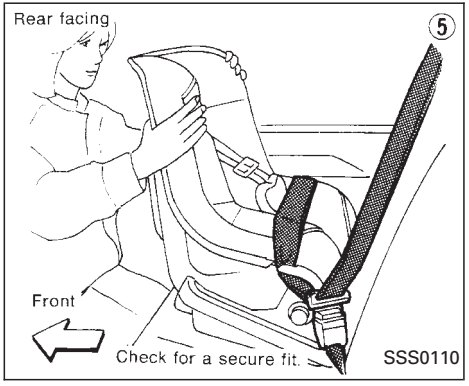

5. Before placing the child in the child restraint, use force to tilt the child restraint from side to side, and tug it forward to make sure that it is securely held in place.
6. Check that the retractor is in the automatic locking mode by trying to pull more seat belt out of the retractor. If you cannot pull any more seat belt webbing out of the retractor, the seat belt is in the automatic locking mode.
7. Check to make sure that the child restraint is properly secured prior to each

use. If the belt is not locked, repeat steps three through six.

After the child restraint is removed and the seat belt is allowed to wind back into the retractor, the automatic locking mode (child restraint mode) is canceled; the seat belt only locks during a sudden stop or impact.

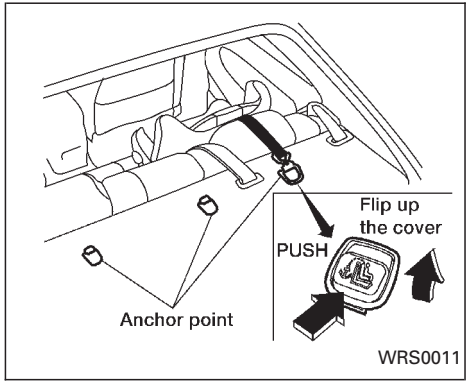

TOP TETHER STRAP CHILD RESTRAINT

If your child restraint has a top tether strap, it must be secured to the provided anchor point. First, secure the child restraint with the rear seat belt.

Flip up the anchor cover from the anchor point which is located directly behind the child seat.

Secure the top tether strap to the anchor bracket. Tighten the strap according to manufacturer instructions to remove any slack.

⚠ WARNING

Child restraint anchor points are designed to withstand only those loads imposed by correctly fitted child restraints. Under no circumstances are they to be used for adult seat belts or harnesses.

Anchor point locations

Anchor points are located on the rear parcel shelf finisher.

If you have any questions when installing a top strap child restraint on the rear seat, consult your NISSAN dealer for details.

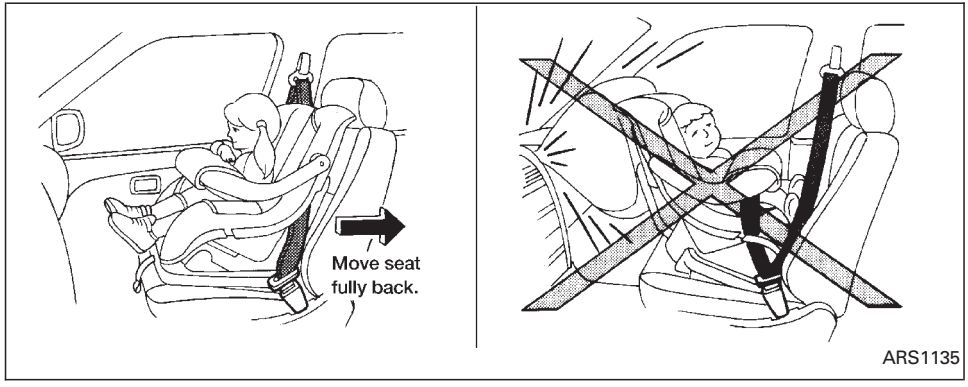

INSTALLATION ON FRONT PASSENGER SEAT

WARNING

- **Never install a rear-facing child restraint in the front passenger seat. Supplemental front air bags inflate with great force. A rear-facing child restraint could be struck by the supplemental front air bag in a crash and could seriously injure or kill your child.**
- **NISSAN recommends that child restraints be installed in the rear seat. However, if you must install a forward-facing child restraint in the front passenger seat, move the passenger seat to the rear most position.**
- **A child restraint with a top tether strap should not be used in the front passenger seat.**
- **The three-point seat belt in your vehicle is equipped with a locking mode retractor which must be used when installing a child restraint.**
- **Failure to use the retractor's locking mode will result in the child restraint not being properly secured. The restraint could tip over or otherwise be unsecured and cause injury to the child in a sudden stop or collision.**

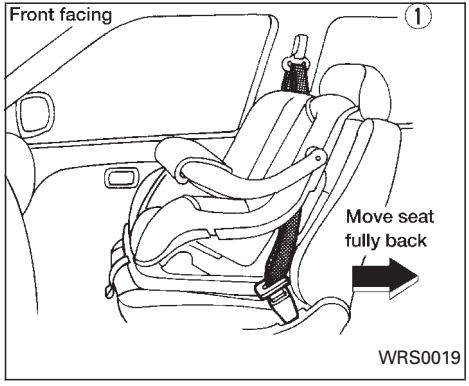

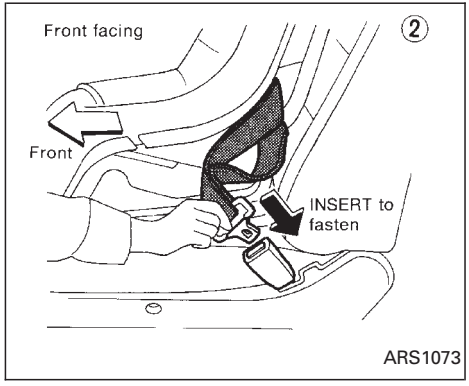

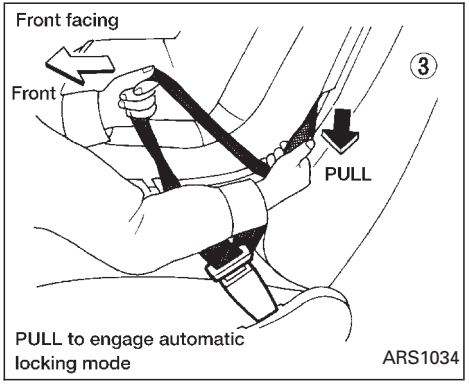

If you must install a child restraint in the front seat, follow these steps:

1. Position the child restraint on the front passenger seat. **It should be placed in a forward-facing direction only.** Move the seat to the rear most position. Always follow the child restraint manufacturer's instructions. **Child restraints for infants must be used in the rear-facing direction and therefore must not be used in the front seat.**
2. Route the seat belt tongue through the child restraint and insert it into the buckle until you hear and feel the latch engage.

   Be sure to follow the child restraint manufacturer's instructions for belt routing.
3. Pull on the shoulder belt until all of the belt is fully extended. At this time, the seat belt retractor is in the automatic locking mode (child restraint mode). It reverts back to emergency locking mode when the seat belt is fully retracted.

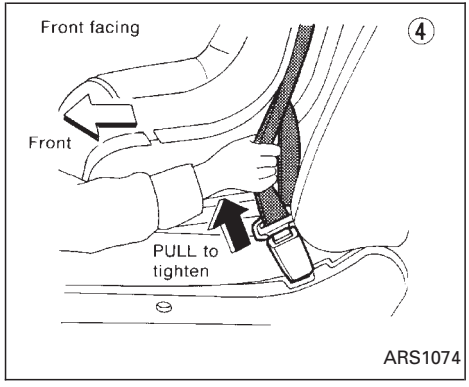

4. Allow the seat belt to retract. Pull up on the seat belt to remove any slack in the belt.

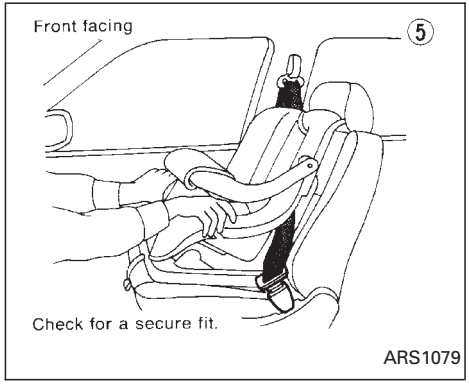

5. Before placing the child in the child restraint, use force to tilt the child restraint from side to side, and tug it forward to make sure it is securely held in place.
6. Check that the retractor is in the automatic locking mode by trying to pull more seat belt out of the retractor. If you cannot pull any more belt webbing out of the retractor, the seat belt is in the automatic locking mode.
7. Check to make sure the child restraint is properly secured prior to each use. If the lap belt is not locked, repeat steps 3 through 6.

After the child restraint is removed and the seat belt is fully retracted, the automatic locking mode (child restraint mode) is canceled.

2 Instruments and controls

Meters and gauges 2-2
Speedometer and odometer 2-3
Tachometer.....2-4
Engine coolant temperature gauge.....2-4
Fuel gauge 2-5
Warning/indicator lights and chimes 2-6
Checking bulbs.....2-6
Warning lights.....2-6
Indicator lights 2-8
Chimes.....2-9
Security systems 2-10
Nissan vehicle immobilizer system (NVIS).....2-10
Vehicle security system (if so equipped) 2-12
Windshield wiper and washer switch.....2-14
Switch operation.....2-14
Rear window defogger switch.....2-15
Headlight and turn signal switch.....2-16
Headlight switch 2-16
Turn signal switch.....2-17
Cornering light 2-18
Fog light switch (if so equipped).....2-18
Hazard warning flasher switch.....2-18
Horn.....2-19
Power socket 2-19
Cigarette lighter (accessory) and ash tray.....2-20
Storage.....2-21
Map pocket.....2-21
Glasses case.....2-21
Cup holders 2-22
Glove box 2-23
Console box 2-23
Trunk side net.....2-25
Windows.....2-25
Power windows.....2-25
Sunroof (if so equipped).....2-26
Interior light.....2-28
Map lights (if so equipped).....2-28
Trunk light.....2-29
Integrated HomeLink® universal transceiver (if so equipped) 2-29
Programming HomeLink®.....2-30
Programming HomeLink® for Canadian customers 2-31

Operating the integrated HomeLink® universal transceiver.....2-31
Programming trouble-diagnosis.....2-31
Clearing the programmed information.....2-31
Rolling code programming 2-31
Reprogramming a single HomeLink® button.....2-32
If your vehicle is stolen.....2-32

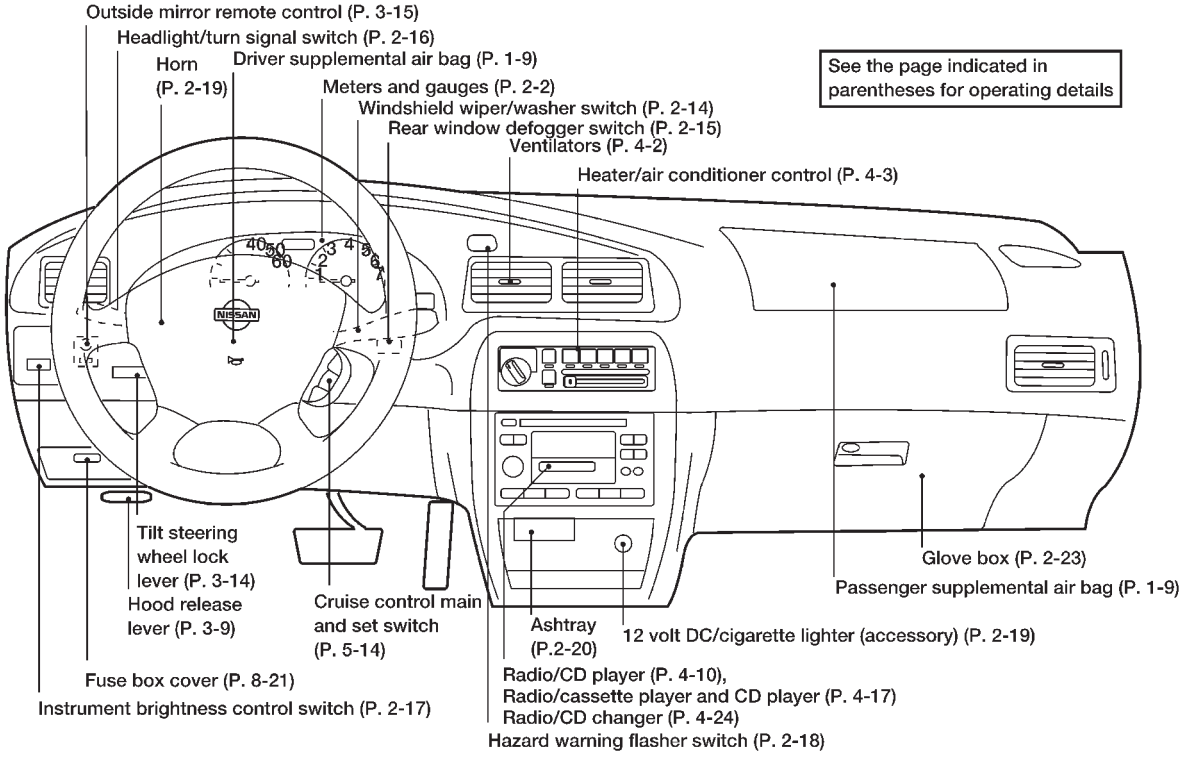
Outside mirror remote control (P. 3-15)
Headlight/turn signal switch (P. 2-16)
Horn (P. 2-19)
Driver supplemental air bag (P. 1-9)
Meters and gauges (P. 2-2)
Windshield wiper/washer switch (P. 2-14)
Rear window defogger switch (P. 2-15)
Ventilators (P. 4-2)
Heater/air conditioner control (P. 4-3)
See the page indicated in parentheses for operating details
Tilt steering wheel lock lever (P. 3-14)
Hood release lever (P. 3-9)
Cruise control main and set switch (P. 5-14)
Ashtray (P.2-20)
12 volt DC/cigarette lighter (accessory) (P. 2-19)
Glove box (P. 2-23)
Passenger supplemental air bag (P. 1-9)
Fuse box cover (P. 8-21)
Instrument brightness control switch (P. 2-17)
Radio/CD player (P. 4-10),
Radio/cassette player and CD player (P. 4-17)
Radio/CD changer (P. 4-24)
Hazard warning flasher switch (P. 2-18)
WIC0001

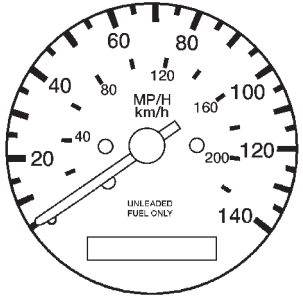

LIC0002

SPEEDOMETER AND ODOMETER

Speedometer

The speedometer indicates vehicle speed in miles per hour (MP/H) and kilometers per hour (km/h).

Odometer/Twin trip odometer

The odometer/twin trip odometer are displayed when the igntion key is in the ON position.

The odometer records the total distance the vehicle has been driven.

The twin trip odometer records the distance of individual trips.

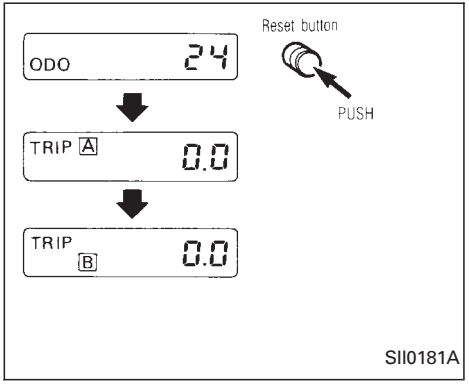

SII0181A

Changing the display:

Pushing the reset button changes the display as follows:

ODO → TRIP A → TRIP B → ODO

Resetting the trip odometer:

Pushing the reset button for more than 1 second resets the trip odometer to zero.

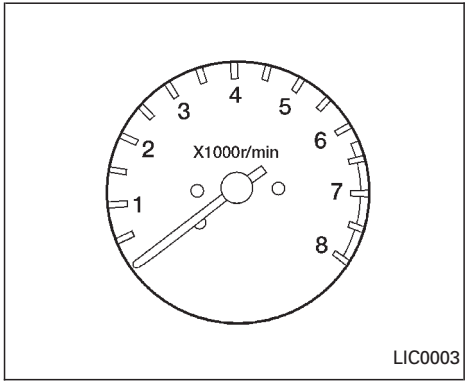

TACHOMETER

The tachometer indicates engine speed in revolutions per minute (r/min).

⚠ CAUTION

When engine speed approaches the red zone, shift to a higher gear. Operating the engine in the red zone may cause serious engine damage.

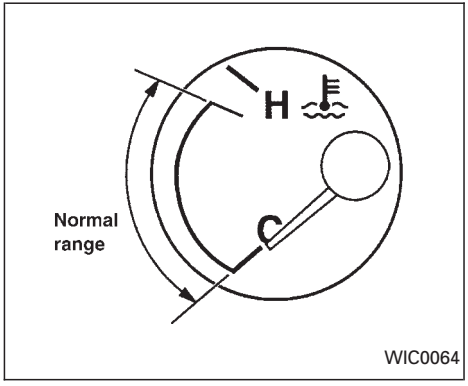

ENGINE COOLANT TEMPERATURE GAUGE

The gauge indicates the engine coolant temperature.

The engine coolant temperature varies with the outside air temperature and driving conditions.

⚠ CAUTION

If the gauge indicates engine coolant temperature over the normal range, stop the vehicle as soon as safely possible. If the engine is overheated, continued operation of the vehicle may seriously damage the engine. See the "In case of emergency" section for immediate action required.

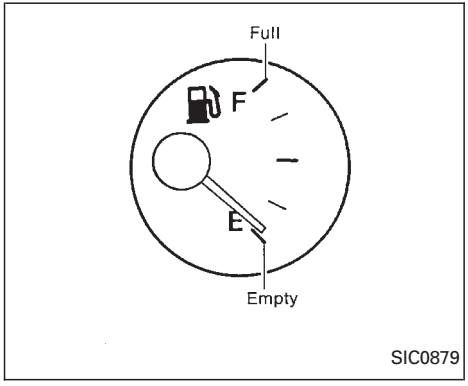

FUEL GAUGE

The gauge indicates the **approximate** fuel level in the tank.

The gauge may move slightly during braking, turning, acceleration, or going up or down hills.

The gauge needle returns to empty (E) after the ignition key is turned to OFF.

The warning indicator light comes on when the amount of fuel in the tank is getting low. **Refill the fuel tank before the gauge registers E (Empty).**

CAUTION

- **If the vehicle runs out of fuel, the SERVICE ENGINE SOON malfunction indicator lamp (MIL) may come on. Refuel as soon as possible. After a few driving trips, the SERVICE ENGINE SOON lamp should turn off. If the lamp remains on after a few driving trips, have the vehicle inspected by an authorized NISSAN dealer.**
- **For additional information, see the ‘‘Malfunction indicator lamp (MIL)’’ later in this section.**

BRAKE or Brake warning light	Seat belt warning light	Engine oil pressure warning light
Turn signal/hazard indicator lights	Low washer fluid warning light (Canada only)	CRUISE main switch indicator light (if so equipped)
High beam indicator light	ABS or Anti-lock brake warning light	SET Cruise SET indicator light (if so equipped)
Charge warning light	O/D OFF Overdrive off indicator light (automatic transmission only)	Supplemental air bag warning light
Door open warning light	SERVICE ENGINE SOON Malfunction indicator lamp (emission system)	Low fuel warning light

CHECKING BULBS

With all doors closed, apply the parking brake and turn the ignition key to the ON position without starting the engine. The following lights come on:

, BRAKE or , , SERVICE ENGINE SOON ,

The following lights come on briefly and then go off:

ABS or , , O/D OFF

If any light fails to come on, it may indicate a burned-out bulb or an open circuit in the electrical system. Have the system repaired promptly.

WARNING LIGHTS

Engine oil pressure warning light

This light warns of low engine oil pressure. If the light flickers or comes on during normal driving, pull off the road in a safe area, stop the engine **immediately** and call an authorized NISSAN dealer.

The oil pressure warning light is not designed to indicate a low oil level. Use the dipstick to check the oil level. See "Engine oil" in the "Do-it-yourself" section.

CAUTION

Running the engine with the oil pressure warning light on could cause serious damage to the engine almost immediately. Turn off the engine as soon as it is safe to do so.

Charge warning light

If this light comes on while the engine is running, it may indicate the charging system is not functioning properly. Turn the engine off and check the generator belt. If the belt is loose, broken, or missing, or if the light remains on, see an authorized NISSAN dealer immediately.

CAUTION

Do not continue driving if the belt is loose, broken or missing.

Door open warning light

This light comes on when any of the doors are not closed securely while the ignition key is ON.

Seat belt warning light and chime

The light and chime remind you to fasten your seat belts. The light illuminates whenever the ignition key is turned to ON, and remains illuminated until the driver's seat belt is fastened. At the same time, the chime sounds for about seven seconds unless the driver seat belt is securely fastened.

Refer to ''Seat belts'' in the ''Seats, restraints and supplemental air bag systems'' section for precautions on seat belt usage.

Supplemental air bag warning light

When the ignition key is in the ON or START position, the supplemental air bag warning light illuminates for about 7 seconds and then turns off. This means the system is operational.

If any of the following conditions occur, the supplemental front air bag, supplemental side air bag (if so equipped) and pre-tensioner seat belt systems need servicing and your vehicle must be taken to an authorized NISSAN dealer:

- The supplemental air bag warning light remains on after approximately 7 seconds.
- The supplemental air bag warning light flashes intermittently.
- The supplemental air bag warning light does not come on at all.

Unless checked and repaired, the supplemental restraint system (air bag system) and/or the pre-tensioner seat belts may not function properly. For additional details, see ''Supplemental restraint system'' in the ''Seats, restraints and supplemental air bag systems'' section.

WARNING

If the supplemental air bag warning light is on, it could mean that the supplemental air bag or supplemental side air bag system (if so equipped) will not operate in an accident.

Low washer fluid warning light (Canada only)

This light comes on when the washer fluid is at a low level. Add washer fluid as necessary. See the ''Do-it-yourself'' section.

BRAKE or Brake warning light

This light functions for both the parking brake and the foot brake systems.

When the ignition key is in the ON position, the light comes on when the parking brake is applied, and also warns of a low brake fluid level. If the light comes on while the engine is running with the parking brake not applied, stop the vehicle and perform the following:

1. Check the brake fluid level. Add brake

fluid as necessary. See ‘‘Brake and clutch fluid’’ in the ‘‘Do-it-yourself’’ section of this owner’s manual.

2. If the brake fluid level is correct, have the brake system checked by an authorized NISSAN dealer.

WARNING

- **Your brake system may not be working properly if the warning light is on. Driving could be dangerous. If you judge it to be safe, drive carefully to the nearest service station for repairs. Otherwise, have your vehicle towed because driving it could be dangerous.**
- **Pressing the brake pedal with the engine stopped and/or a low brake fluid level may increase your stopping distance and braking will require greater pedal effort as well as pedal travel.**
- **If the brake fluid level is below the MINIMUM or MIN mark on the brake fluid reservoir, do not drive until the brake system has been checked at a NISSAN dealer.**

ABS or (ABS) Anti-lock brake warning light (if so equipped)

If the light comes on while the engine is running, it may indicate the anti-lock portion of the brake system is not functioning properly. Have the system checked by an authorized NISSAN dealer.

Turn off the engine, and start it again by slowly turning the ignition key (quickly doing so may cause the ABS light to stay on when there is nothing wrong). If the light stays on, have the system checked by an authorized NISSAN dealer.

If an abnormality occurs in the system, the anti-lock function ceases, but the regular braking system continues to operate.

If the light comes on while you are driving, contact an authorized NISSAN dealer for repair.

Low fuel warning light

This light comes on when the fuel level in the fuel tank is getting low. Refuel as soon as it is convenient, preferably before the fuel gauge reaches E (Empty). **There will be a small reserve of fuel in the tank when the fuel gauge needle reaches E (Empty).**

INDICATOR LIGHTS

O/D OFF Overdrive off indicator light

This light comes on when the overdrive switch is pushed to the OFF position.

Turn signal/hazard indicator lights

The appropriate light flashes when the turn signal switch is activated.

Both lights flash when the hazard switch is turned on.

High beam indicator light (Blue)

This light comes on when the headlight high beam is on and goes out when the low beam is selected.

The high beam indicator light also comes on when the passing signal is activated.

CRUISE Cruise main switch indicator light (if so equipped)

The light comes on when the cruise control main switch is pushed. The light goes out when the main switch is pushed again.

While the cruise main switch indicator light comes on, the cruise control system is operational.

SET Cruise set indicator light (if so equipped)

The light comes on while the vehicle speed is controlled by the cruise control system. If the light blinks while the engine is running, it may indicate the cruise control system is not functioning properly. Have the system checked by your NISSAN dealer.

SERVICE ENGINE SOON Malfunction indicator lamp (MIL)

If this indicator lamp comes on steady or blinks while the engine is running, it may indicate a potential emission control malfunction.

The malfunction indicator lamp may also come on steady if the fuel filler cap is loose or missing, or if the vehicle runs out of fuel. Check to make sure the fuel filler cap is installed and closed tightly, and that the vehicle has at least three gallons of fuel in the fuel tank.

After a few driving trips, the SERVICE ENGINE SOON lamp should turn off if no other potential emission control system malfunction exists.

Operation

The malfunction indicator lamp will come on in one of two ways:

- Malfunction indicator lamp on steady - An emission control system malfunction has been detected. Check the fuel filler cap. If the fuel filler cap is loose or missing, tighten or install the cap and continue to drive the vehicle. The SERVICE ENGINE SOON lamp should turn off after a few driving trips. If the SERVICE ENGINE SOON lamp does not turn off after a few driving trips, have the vehicle inspected by an authorized NISSAN dealer. You do not need to have your vehicle towed to the dealer.
- Malfunction indicator lamp blinking - An engine misfire has been detected which may damage the emission control system. To reduce or avoid emission control system damage:
  a) do not drive at speeds above 45 MPH (72 km/h).
  b) avoid hard acceleration or deceleration.
  c) avoid steep uphill grades.
  d) if possible, reduce the amount of cargo being hauled or towed.

The malfunction indicator lamp may stop blinking and come on steady. Have the vehicle inspected by an authorized NISSAN dealer. You do not need to have your vehicle towed to the dealer.

⚠ CAUTION

Continued vehicle operation without having the emission control system checked and repaired as necessary could lead to poor driveability, reduced fuel economy, and possible damage to the emission control system.

CHIMES

Brake pad wear warning

The disc brake pads have audible wear warnings. When a brake pad requires replacement, it makes a high pitched scraping sound when the vehicle is in motion, whether or not the brake pedal is depressed. Have the brakes checked as soon as possible if the warning sound is heard.

Key reminder chime

A chime sounds if the driver's door is opened while the key is left in the ignition switch. Remove the key and take it with you when leaving the vehicle.

Light reminder chime

With the ignition switch in the OFF position, a chime sounds when the driver's door is opened with the headlight switch on.

Turn the headlight switch OFF when leaving the vehicle.

IC0005

Your vehicle has two types of security systems:

- Nissan Vehicle Immobilizer System-NVIS
- Vehicle security system (if so equipped)

NISSAN VEHICLE IMMOBILIZER SYSTEM (NVIS)

The Nissan Vehicle Immobilizer System (NVIS) will not allow the engine to start without the use of a registered NVIS key.

If the engine fails to start using a registered NVIS key (for example, when interference is caused by another NVIS key, an automated toll road device or automated payment device on the key ring), restart the engine using the following procedures:

1. Leave the ignition switch in the ON position for approximately 5 seconds.
2. Turn the ignition switch to the OFF or LOCK position, and wait approximately 5 seconds.
3. Repeat step 1 and 2.
4. Restart the engine while holding the device (which may have caused the interference) separate from the registered NVIS key.

If the no start condition re-occurs, Nissan recommends placing the registered NVIS key on a separate key ring to avoid interference from other devices.

Statement related to section 15 of FCC rules for Nissan Vehicle Immobilizer System (CONT ASSY - IMMOBILIZER, ANT ASSY - IMMOBILIZER)

This device complies with part 15 of the FCC Rules and RSS-210 of Industry Canada. Operation is subject to the following two conditions;

(1) This device may not cause harmful interference, and (2) this device must accept any interference received, including interference that may cause undesired operation of the device.

CHANGES OR MODIFICATIONS NOT EXPRESSLY APPROVED BY THE MANUFACTURER FOR COMPLIANCE COULD VOID THE USER'S AUTHORITY TO OPERATE THE EQUIPMENT.

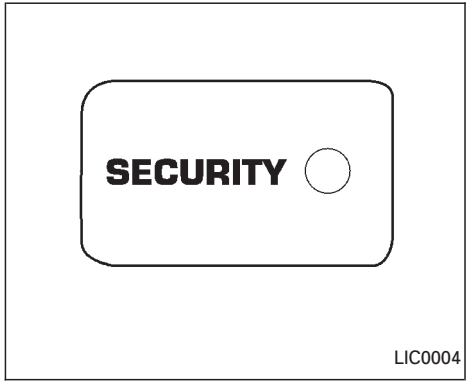

Security indicator light (Nissan Vehicle Immobilizer System)

The security indicator light blinks every 3 seconds whenever the ignition switch is in the LOCK, OFF or ACC position. This function indicates the Nissan Vehicle Immobilizer System (NVIS) is operational.

If the NVIS is malfunctioning, the light will remain on while the ignition key is in the ON position.

If the light still remains on and/or the engine will not start, see your Nissan dealer for NVIS service as soon as possible. Please bring all NVIS keys that you have when visiting your NISSAN dealer for service.

VEHICLE SECURITY SYSTEM (if so equipped)

The vehicle security system provides visual and audio alarm signals if parts of the vehicle are disturbed.

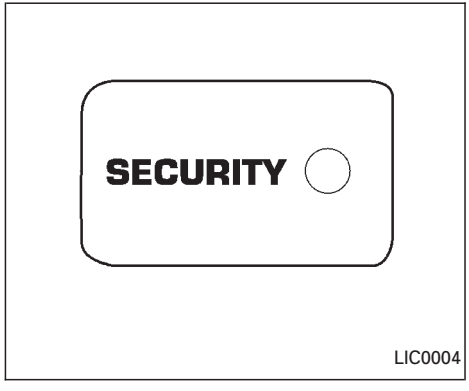

Security indicator light (Vehicle security system)

The security indicator light shows the status of the vehicle security system.

The light operates whenever the ignition switch is in the LOCK, OFF, or ACC position.

The vehicle security system has four phases. For each phase the operation of the security indicator light is different.

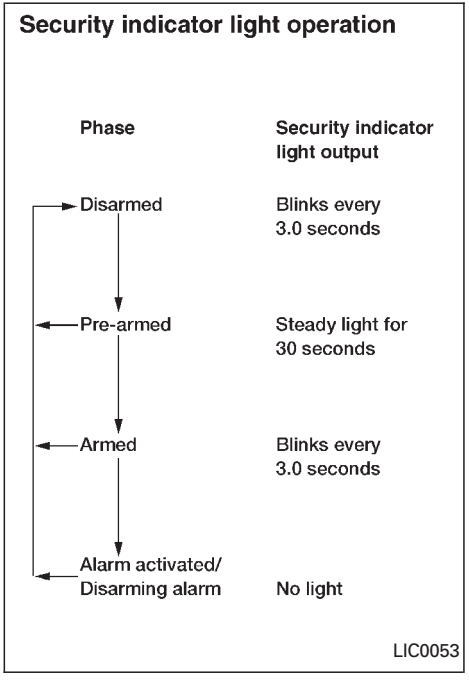

How to arm the vehicle security system

1. Close all windows. **(The system can be armed even if the windows are open).**
2. Remove the key from the ignition switch.
3. Close the hood, trunk lid and all doors. Lock all doors. The doors can be locked with the key or with the multi-remote controller.

   Multi-remote controller operation:

   - Push the button on the multi-remote controller. All doors lock. The hazard lights flash twice and the horn beeps once to indicate all doors are locked.
   - When the button is pushed with all doors locked, the hazard lights flash twice and the horn beeps once as a reminder that the doors are already locked.
     The horn may or may not beep once. Refer to ‘‘Silencing the horn beep feature’’ later in this section for details.
4. Confirm that the SECURITY indicator light comes on. The SECURITY light stays on for about 30 seconds. The vehicle security system is now pre-armed. After about 30 seconds the vehicle security system automatically shifts into the armed phase. The SECURITY light begins to flash once every three seconds. If, during the 30-second pre-arm time period, the door is unlocked by the key or the multi-remote controller, or the ignition key is turned to ACC or ON, the system will not arm.

- **If the key is turned slowly when locking the door, the system may not arm. Furthermore, if the key is turned excessively to the unlock position, the system may be disarmed when the key is removed. If the indicator light fails to glow for 30 seconds, unlock the door once and lock it again.**
- **Even when the driver and/or passengers are in the vehicle, the system will arm with all doors, hood and trunk lid closed and locked with the ignition key in the OFF position.**

Vehicle security system activation

The vehicle security system will give the following alarm:

- The headlights blink and the horn sounds intermittently.
- The alarm automatically turns off after 2 to 3 minutes. However, the alarm reactivates if the vehicle is tampered with again. The alarm can be shut off by unlocking a door or trunk lid with the key, or by pressing the button on the multi-remote controller.

The alarm is activated by:

- opening the door or trunk lid without using the key or multi-remote controller (even if the door is unlocked by releasing the door inside lock switch) or opening the trunk lid by operating the opener lever.
- opening the hood.

How to stop an activated alarm

The alarm stops only by unlocking a door or the trunk lid with the key, or by pressing the button on the multi-remote controller.

The alarm does not stop if the ignition switch is turned to ACC or ON.

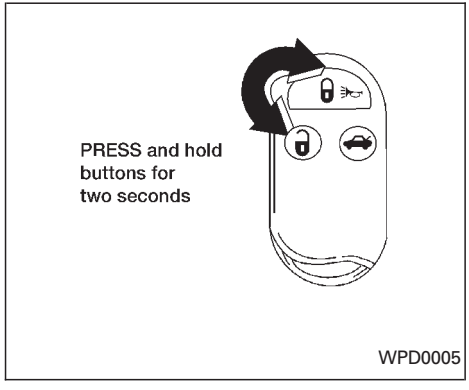

Silencing the horn beep feature

If desired, the horn beep feature can be deactivated using the multi-remote controller. The instructions are on the back of the multi-remote controller.

To deactivate: Press and hold the and buttons **for at least two seconds.**

The hazard lights will flash three times to confirm that the horn beep feature has been deactivated.

To activate: Press and hold the and buttons **for at least two seconds once more.**

The hazard lights will flash three times to confirm that the horn beep feature has been reactivated.

Deactivating the horn feature does not silence the horn if the alarm is triggered.

If the system does not operate as described above, have it checked by an authorized NISSAN dealer.

WINDSHIELD WIPER AND WASHER SWITCH

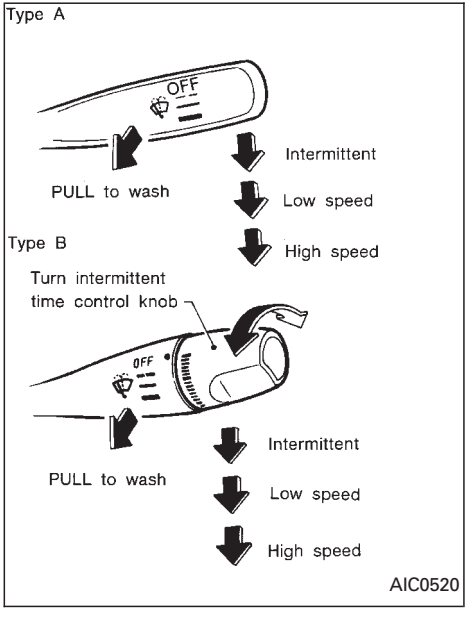

SWITCH OPERATION

Push the lever down to operate the windshield wipers. Pull the lever toward you to operate the washer.

Intermittent operation can be adjusted from

2 to approximately 20 seconds by turning the knob (Type B only).

The wipers automatically cycle twice when the washer is activated.

CAUTION

- **Do not operate the washer continuously for more than 30 seconds.**
- **Do not operate the washer if the reservoir tank is empty.**

WARNING

In freezing temperatures the washer solution may freeze on the windshield and obscure your vision which may lead to an accident. Warm the windshield with the defroster before you wash the windshield.

REAR WINDOW DEFOGGER SWITCH

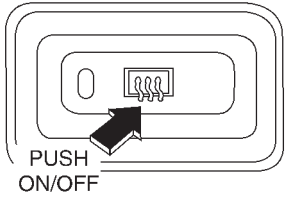

AIC1004

To defog the rear window glass, start the engine and push the rear window defogger switch on. The rear window defogger indicator light on the switch comes on. Push the switch again to turn the defogger off.

The rear window defogger switch automatically turns off after approximately 15 minutes.

CAUTION

When cleaning the inner side of the window, be careful not to scratch or damage the rear window defogger.

NOTE: The top few rows of wires on the rear window are not part of the rear window defogging system. These wires make up the antenna for the audio system.

HEADLIGHT AND TURN SIGNAL SWITCH

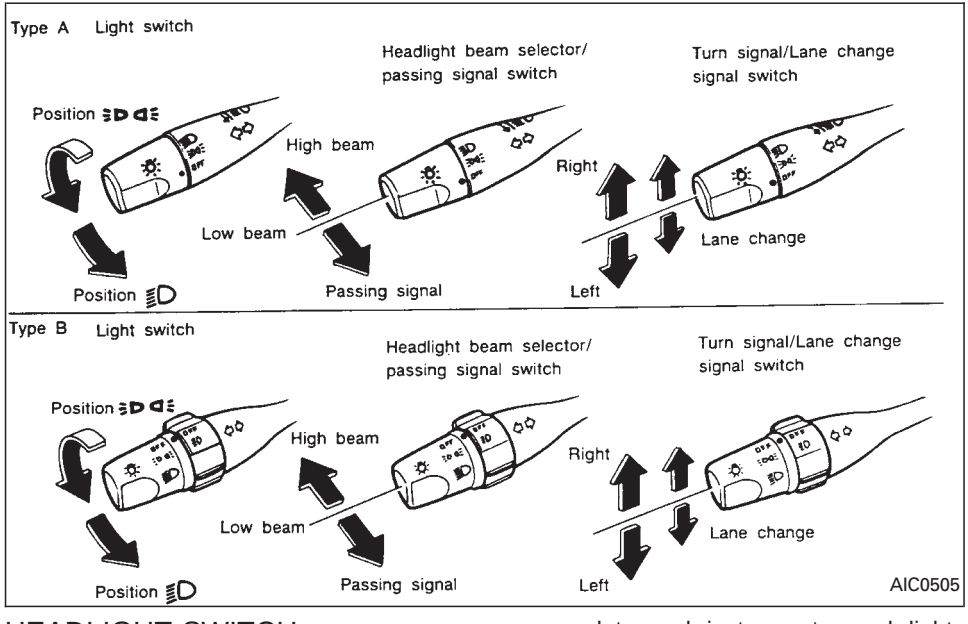

HEADLIGHT SWITCH

Lighting

Turn the switch to the position: The parking, rear combination, side marker, license plate and instrument panel lights come on.

Turn the switch to the position:

The headlights come on and all the other lights remain on.

To select the high beam function, push the lever forward. The high beam lights come on and the indicator light illuminates. Pull it back to select the low beam.

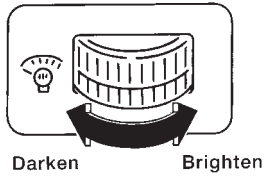

AIC0608

Instrument brightness control

The instrument brightness control operates when the light switch is in the ≡DC≡ or position.

Turn the control to adjust the brightness of instrument panel lights.

Passing signal

Pulling and releasing the lever flashes the headlight high beams on and off.

Daytime running light system (Canada only)

The headlights automatically illuminate at a reduced intensity when the engine is started with the parking brake released. The daytime running lights operate with the headlight switch in the OFF position or in the ≡DC≡ position. Turn the headlight switch to the position for full illumination when driving at night.

If the parking brake is applied before the engine is started, the daytime running lights do not illuminate. The daytime running lights illuminate once the parking brake is released. The daytime running lights will remain on until the ignition switch is turned off.

⚠ WARNING

When the daytime running light system is active, tail lights on your vehicle are not on. It is necessary at dusk to turn on your headlights. Failure to do so could cause an accident injuring yourself and others.

TURN SIGNAL SWITCH

Turn signal

Move the lever up or down to signal the turning direction. When the turn is completed, the turn signals cancel automatically.

Lane change signal

To signal a lane change, move the lever up or down to the point where the indicator light begins to flash, but the lever does not latch.

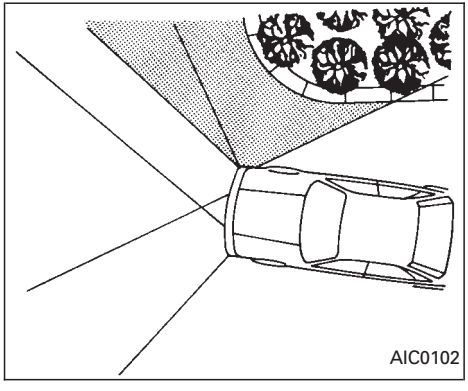

CORNERING LIGHT

The cornering light provides additional illumination toward the turning direction. The light will come on when the turn signal lever is moved to the right or left with the parking lights or headlamps turned on and the key in the on position.

FOG LIGHT SWITCH (if so equipped)

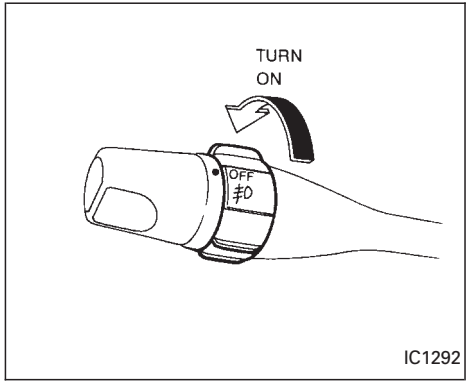

To turn the front fog lights on, rotate the switch to the position.

To turn them off, turn the switch to the OFF position.

The headlight switch must be in position (low-beam headlights on) for the fog lights to operate. The fog lights automatically turn off whenever the high-beam headlight function is selected.

HAZARD WARNING FLASHER SWITCH

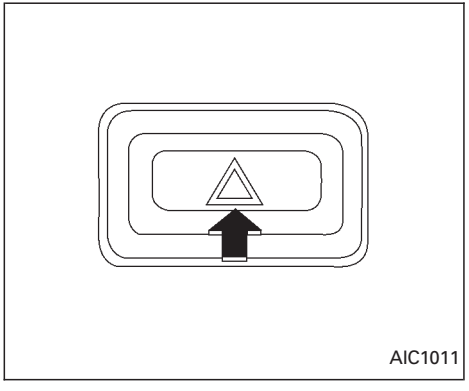

Push the switch on to warn other drivers when you must stop or park under emergency conditions. All turn signal lights flash.

⚠ WARNING

- **If stopping for an emergency, be sure to move the vehicle well off the road.**

- **Do not use the switch while moving on the highway unless unusual circumstances force you to drive so slowly that your vehicle might become a hazard to other traffic.**
- **Turn signals do not work when the hazard warning flasher lights are on.**

The flashers can be actuated with the ignition switch either OFF or ON.

Some state laws may prohibit the use of the hazard warning flasher switch while driving.

HORN

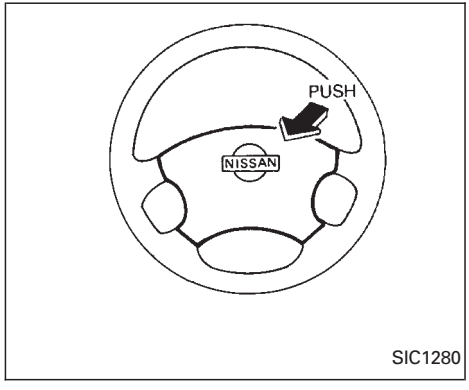

To sound the horn, push the center pad area of the steering wheel.

POWER SOCKET

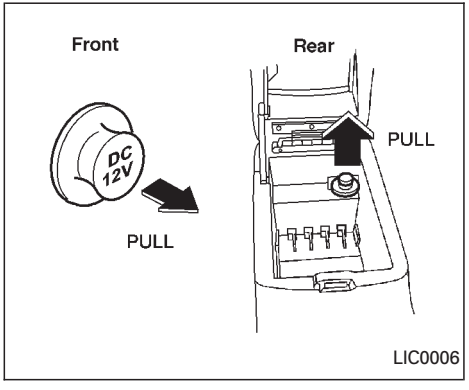

The power socket is for powering electrical accessories such as cellular telephones.

⚠ CAUTION

- **Take care as the socket and plug may be hot during or immediately after use.**
- **This power socket is not designed for use with a cigarette lighter unit.**
- **Do not use with accessories that exceed a 12 volt, 120W (10A) power draw. Do not use double adapters or more than one electrical accessory.**

CIGARETTE LIGHTER (accessory) AND ASH TRAY

- **Use this power socket with the engine running. (If the engine is stopped, this could result in a discharged battery.)**
- **Avoid using when the air conditioner, headlights or rear window defogger is on.**
- **Before inserting or disconnecting a plug, be sure the electrical accessory being used is turned off.**
- **Push the plug in as far as it will go. If good contact is not made, the plug may overheat or the internal temperature fuse may blow.**
- **When not in use, be sure to close the cap. Do not allow water to contact the socket.**

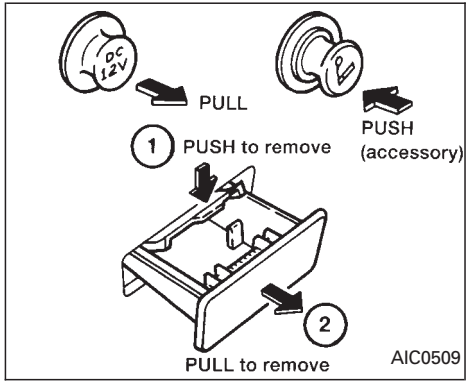

The cigarette lighter element is an accessory. A genuine NISSAN cigarette lighter can be purchased from an authorized NISSAN dealer.

The cigarette lighter operates when the ignition switch is in the ACC or ON position.

Push the lighter in all the way. When the lighter is heated, it springs out.

Return the lighter to its original position after use.

⚠ CAUTION

The cigarette lighter socket is a power source for the cigarette lighter element only. The use of the cigarette lighter socket as a power source for any other accessory is not recommended.

⚠ WARNING

The cigarette lighter should not be used while driving so full attention may be given to vehicle operation.

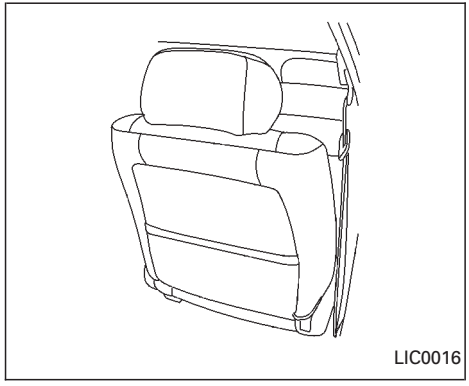

MAP POCKET

A map pocket is located on the back of the passenger seat. The map pocket can be used to store maps.

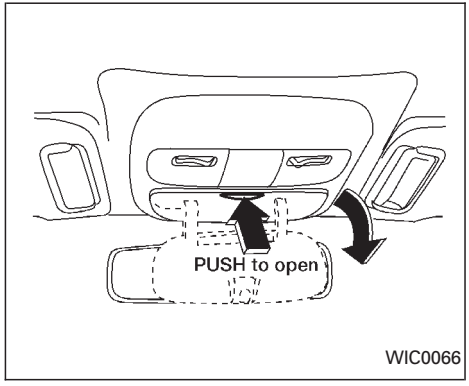

GLASSES CASE

The glasses case can be opened by pushing the button.

⚠ WARNING

The glasses case should not be used while driving so full attention may be given to vehicle operation.

⚠ CAUTION

- **Do not use for anything other than glasses.**
- **Do not leave glasses in the glasses case while parking in direct sunlight. The heat may damage the glasses.**

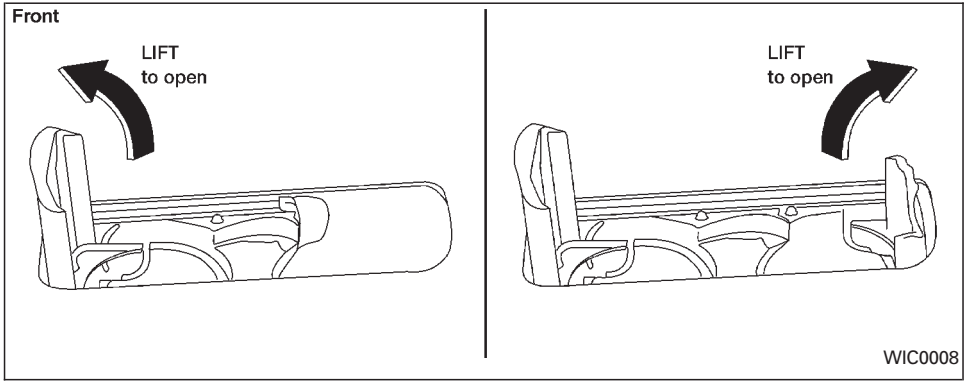

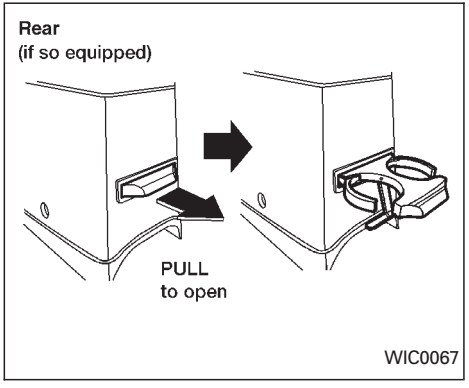

CUP HOLDERS

To open the front cup holders, lift the console covers. To close, lower the console covers.

Each cup holder has a rubber mat at the bottom that may be removed for cleaning.

Vehicles equipped with an automatic transmission have a cup holder at the rear of the console box. Pull the cup holder out from the console box to use it.

Do not pull the cup holder arms or force a cup or bottle into the cup holder to adjust to a larger cup position.

⚠ WARNING

The cup holder should not be used while driving so full attention may be given to vehicle operation.

⚠ CAUTION

- **Avoid abrupt starting and braking when the cup holder is being used to prevent spilling the drink. If the liquid is hot, it can scald you or your passenger.**
- **Use only soft cups in the cup holder. Hard objects can injure you in an accident.**

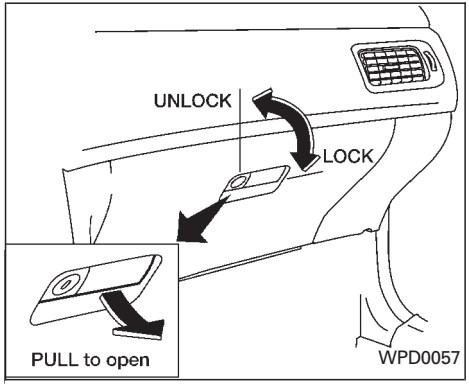

GLOVE BOX

The glove box opens by pulling the handle.

WARNING

Keep glove box lid closed while driving to help prevent injury in an accident or a sudden stop.

CONSOLE BOX

WARNING

The center console box should not be used while driving so full attention may be given to vehicle operation.

CAUTION

- **This power socket is not designed for use with a cigarette lighter unit.**
- **Do not use accessories that exceed 12 volt, 120W (10A) power draw. Do not use double adapters or more than one electrical accessory.**

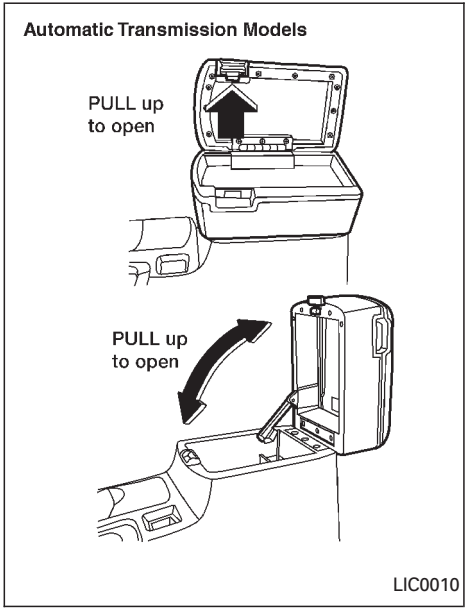

Automatic Transmission Models

Upper half

Pull up on the lever to open the upper half of the console box. The rubber mat may be removed for cleaning.

The upper half of the console box may be used for storage of cellular phones. An access hole is provided at the bottom of the upper half of the console box for phone cord routing to the power socket.

To route a phone cord to the power socket:

1. open the upper half of the console box
2. remove the rubber mat, and then remove the cutout area from the mat
3. remove the access hole cover
4. install the rubber mat
5. route the phone cord through the access hole and plug into the power socket

Lower half

Pull up on the lever to open the lower half of the console box. A power socket is located inside the console box and there is storage for cassette tapes and compact discs.

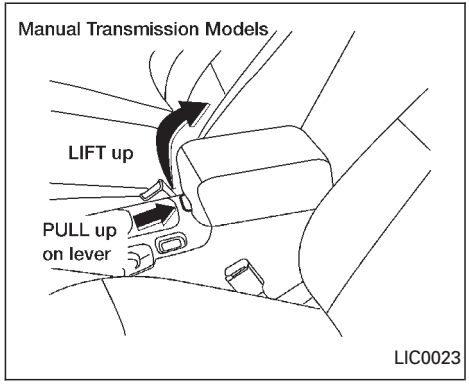

Manual Transmission Models

Pull up on the lever and open the console box. The console box can store cassette tapes and compact discs. A business card holder and a tissue holder are also contained within the console box.

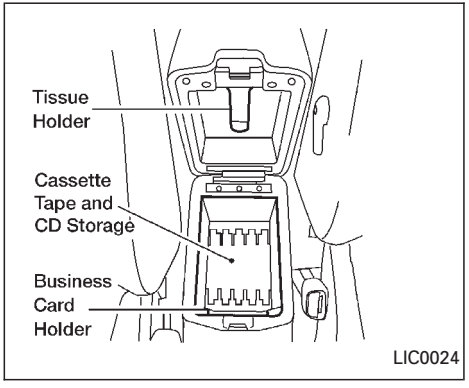

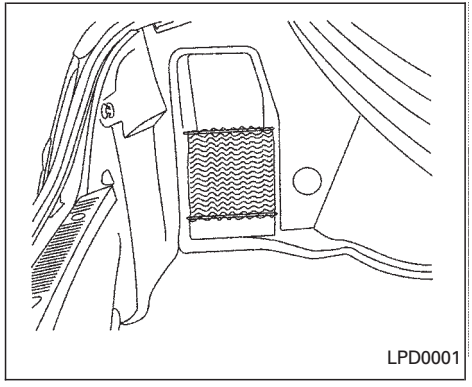

TRUNK SIDE NET

The trunk side net helps keep small objects from moving around in the cargo area while the vehicle is in motion.

POWER WINDOWS

WARNING

- **Make sure that all passengers have their hands, etc. inside the vehicle before closing the windows. Use the window lock switch to prevent unexpected use of the power windows.**
- **Do not leave children unattended inside the vehicle. They could unknowingly activate switches or controls and become trapped in a window. Unattended children could become involved in serious accidents.**

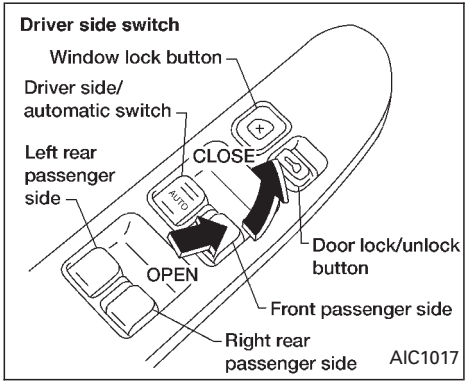

The power windows operate only when the ignition key is in the ON position. To open a window, press down on the switch. To close a window, pull up on the switch. To stop the opening or closing function at any time, simply release the switch.

The driver side control panel is equipped with switches to open or close all of the windows.

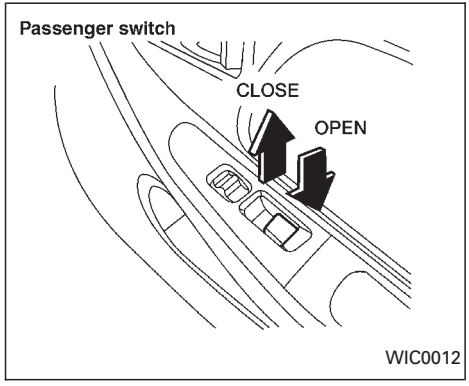

The front and rear passenger window switches operate only the corresponding passenger window. To open the window, press down on the switch. To close the window, pull up on the switch.

Locking passenger windows

When the power window lock switch on the driver side control panel is pushed in, only the driver side window can be opened or closed. Push it in again to cancel this function.

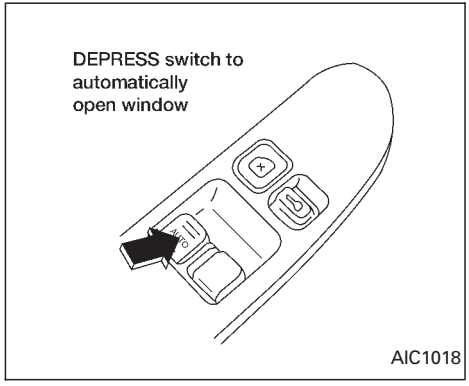

Automatic operation

To fully open the driver's side window, press the driver's side window switch down to the second detent and release it; it need not be held. The window automatically opens all the way. To stop the window, lift the switch up while the window is opening.

SUNROOF (if so equipped)

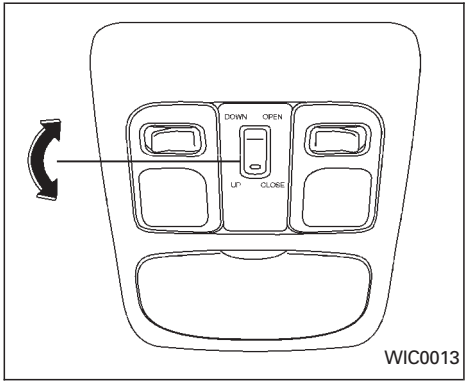

The sunroof operates only when the ignition key is in the ON position.

Sliding the sunroof

To open the roof, press and hold the switch to the DOWN/OPEN side.

To close the roof, press and hold the switch to the UP/CLOSE side.

Tilting the sunroof

To tilt up, first close the sunroof, then push and hold the UP/CLOSE side of the tilt switch. To close the sunroof, push and hold the DOWN/CLOSE side.

Sun shade

Open and close the sun shade by sliding it forward or backward.

⚠ WARNING

- **In an accident you could be thrown from the vehicle through an open sunroof. Always use seat belts and child restraints.**
- **Do not allow anyone to stand up or extend any portion of their body out of the opening while the vehicle is in motion or while the sunroof is closing.**

⚠ CAUTION

- **Remove water drops, snow, ice or sand from the sunroof before opening.**
- **Do not place heavy objects on the sunroof or surrounding area.**

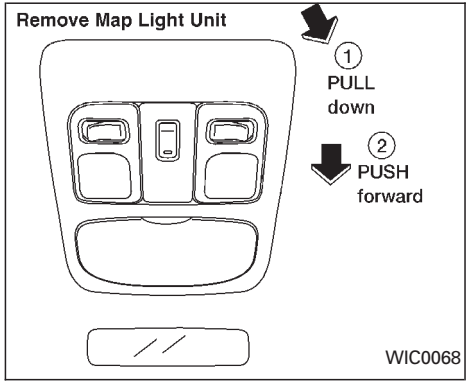

If the sunroof does not close

1. Turn the ignition key to the OFF position. Be sure no objects are caught in the sunroof opening.
2. Remove the map light unit. The shaft end of the sunroof motor will be visible.

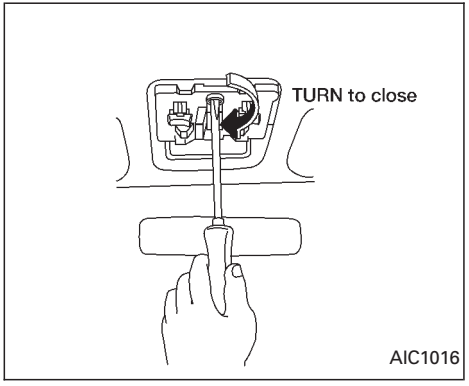

3. Using a wide blade screwdriver, turn the shaft clockwise to close the sunroof.

Have the sunroof system checked and repaired by your NISSAN dealer.

INTERIOR LIGHT

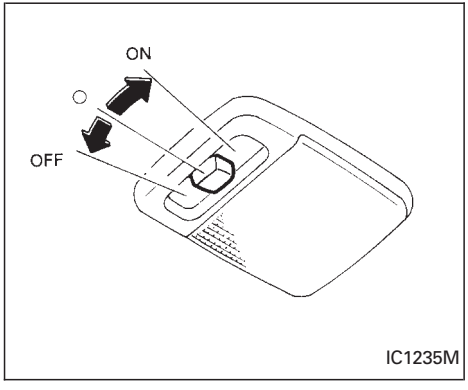

The interior light operates regardless of ignition key position.

The interior light has a three-position switch.

- When the switch is in the OFF position, the interior light does not illuminate, regardless of door position.
- When the switch is in the center ○ position, the interior light illuminates when a door is opened.
- When the switch is in the ON position, the interior light illuminates, whether any door is open or closed.

⚠ CAUTION

Do not use for extended periods of time with the engine stopped. This could result in a discharged battery.

MAP LIGHTS (if so equipped)

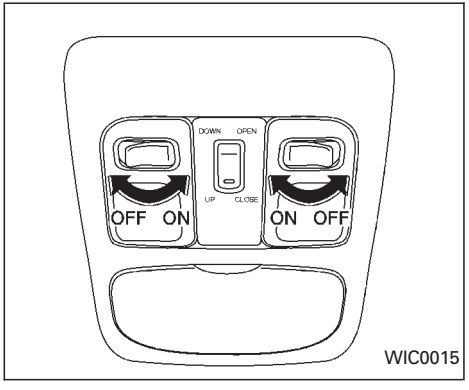

To turn on the map lights, press the switches. To turn them off, press the switches again.

⚠ CAUTION

Do not use for extended periods of time with the engine stopped. This could result in a discharged battery.

TRUNK LIGHT

The light illuminates when the trunk lid is opened. When the trunk lid is closed, the light goes off.

INTEGRATED HOMELINK® UNIVERSAL TRANSCEIVER (if so equipped)

The Integrated HomeLink® Universal Transceiver provides a convenient way to consolidate the functions of up to three individual hand-held transmitters into one built-in device.

Integrated HomeLink® Universal Transceiver:

- Will operate most Radio Frequency (RF) devices such as garage doors, gates, home and office lighting, entry door locks and security systems.
- Is powered by your vehicle's battery. No separate batteries are required. If the vehicle's battery is discharged or is disconnected, HomeLink® will retain all programming.

Once the Integrated HomeLink® Universal Transceiver is programmed, retain the original transmitter for future programming procedures (i.e., new vehicle purchases). Upon sale of the vehicle, the programmed Integrated HomeLink® Universal Transceiver buttons should be erased for security purposes. For additional information refer to ''Programming the Integrated HomeLink® Universal Transceiver'' later in this section.

⚠ WARNING

- **Do not use the Integrated HomeLink® Universal Transceiver with any garage door opener that lacks safety stop and reverse features as required by federal safety standards. (These standards became effective for opener models manufactured after April 1, 1982). A garage door opener which cannot detect an object in the path of a closing garage door and then automatically stop and reverse, does not meet current federal safety standards. Using a garage door opener without these features increases the risk of serious injury or death.**
- **During programming, your garage door or gate may open or close. Make sure that people and objects are clear of the garage door or gate that you are programming.**
- **Your vehicle's engine should be turned off while programming the Integrated HomeLink® Universal Transceiver.**

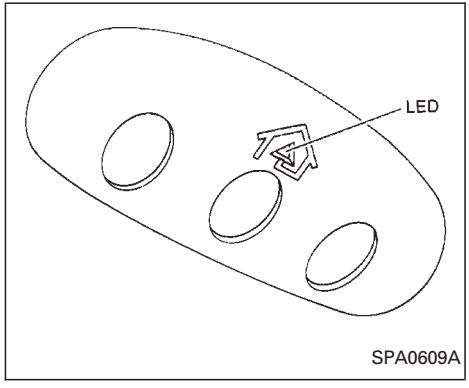

PROGRAMMING HomeLink®

1. With the ignition key in the OFF position, press and hold the two outside buttons, and release when the indicator light begins to flash (approximately 20 seconds). This procedure erases the factory set default codes and does not have to be followed when programming additional hand-held transmitters.
2. Hold the end of the hand-held transmitter (from the device you wish to train) approximately 2 to 5 inches (50 to 127 mm) away from the surface of HomeLink® keeping the indicator light in view.
3. Using both hands, simultaneously push the hand-held transmitter button and the desired HomeLink® button. Do not release the buttons until step 4 has been completed.

NOTE:

Some garage door openers may require the procedures noted under ''Canadian Programming''.

4. The HomeLink® indicator light will flash, first slowly and then rapidly. When the indicator light flashes rapidly, both buttons may be released. The rapid flashing light indicates the Integrated HomeLink® Universal Transceiver has been successfully programmed.

To program the remaining two buttons, follow steps 2 through 4.

If, after repeated attempts, you do not successfully program the Integrated HomeLink® Universal Transceiver to learn the signal of the hand-held transmitter, refer to ''Rolling Code Programming'' later in this section.

PROGRAMMING HomeLink® FOR CANADIAN CUSTOMERS

Prior to 1992, D.O.C. regulations required hand-held transmitters to stop transmitting after 2 seconds. To program your hand-held transmitter to HomeLink®, continue to press and hold the HomeLink® button (note step 2 through 4 under ‘‘Programming HomeLink®’’) while you press and re-press (‘‘cycle’’) your hand-held transmitters every 2 seconds until the indicator light flashes rapidly (indicating successful programming).

NOTE:

If programming a garage door opener, etc., it is advised to unplug the device during the ‘‘cycling’’ process to prevent possible damage to the garage door opener components.

OPERATING THE INTEGRATED HomeLink® UNIVERSAL TRANSCEIVER

The Integrated HomeLink® Universal Transceiver (once programmed) may now be used to activate the garage door, etc. To operate, simply press the appropriate programmed Integrated HomeLink® Universal Transceiver button. The red indicator light will illuminate while the signal is being transmitted.

PROGRAMMING TROUBLE-DIAGNOSIS

If the HomeLink® does not quickly learn the hand-held transmitter information:

- replace the hand-held transmitter batteries with new batteries.
- position the hand-help transmitter with its battery area facing away from the HomeLink® surface.
- press and hold both the HomeLink® and hand-held transmitter buttons without interruption.
- position the hand-held transmitter 2 to 5 inches (50 to 127 mm) away from the HomeLink® surface. Hold the transmitter in that position for up to 15 seconds. If HomeLink® is not programmed within that time, try holding the transmitter in another position - keeping the indicator light in view at all times.

If you continue to have programming difficulties, please contact the NISSAN Consumer Affairs Department. The phone numbers are located in the Foreword of this owner’s manual.

CLEARING THE PROGRAMMED INFORMATION

Individual buttons cannot be cleared, however to clear all programming, press and hold the two outside buttons and release when the indicator light begins to flash (approximately 20 seconds)

ROLLING CODE PROGRAMMING

Rolling code garage door openers (or other rolling code devices) which are ‘‘code protected’’ and manufactured after 1996, may be determined by the following:

A. Reference the garage door opener Owner’s Manual for verification.

B. The hand-held transmitter appears to program the Integrated HomeLink® Universal Transceiver but does not activate the garage door.

C. Press and hold the trained HomeLink® button. If the garage door opener has the rolling code feature, the HomeLink® indicator light will flash rapidly, then remains on after 2 seconds.

To program the Integrated HomeLink® Universal Transceiver to a garage door opener with the rolling code feature, follow these instructions after completing the ‘‘Programming HomeLink®’’ (the aid of a second person may make the following procedures quicker and easier).

1. Locate the training button on the garage door opener motor unit. Exact location and color of the button may vary by garage door opener brand. If there is difficulty locating the training button, reference the garage door opener Owner’s Manual.
2. Press the training button on the garage door opener motor unit (which may activate a training light).

NOTE:

Following step 2, there are 30 seconds in which to initiate step 3.

3. Firmly press and release the programmed HomeLink® button. Press and release the HomeLink® button a second time to complete the training process. (Some garage door openers may require you to do this procedure a third time to complete the training.)

The garage door opener should now recognize the Integrated HomeLink® Universal Transceiver and activate when the HomeLink® button is pressed. The remaining two buttons may now be programmed (if not yet programmed, follow steps 2 through 4 in the ‘‘Programming HomeLink®’’ procedures earlier in this section).

REPROGRAMMING A SINGLE HomeLink® BUTTON

To reprogram an Integrated HomeLink® Universal Transceiver button, complete the following.

1. Press and hold the desired HomeLink® button. **Do not** release the button until step 4 has been completed.
2. When the indicator light begins to flash slowly (after 20 seconds), position the hand-held transmitter 2 to 5 inches (50 to 127 mm) away from the HomeLink® surface.
3. Press and hold the hand-held transmitter button.
4. The HomeLink® indicator light will flash, first slowly and then rapidly. When the indicator light begins to flash rapidly, release both buttons.

The Integrated HomeLink® Universal Transceiver button has now been reprogrammed. The new device can be activated by pushing the HomeLink® button that was just programmed. This procedure will not affect any other programmed HomeLink® buttons.

IF YOUR VEHICLE IS STOLEN

If your vehicle is stolen, you should change the codes of any non-rolling code device that has been programmed into HomeLink®. Consult the Owner’s Manual of each device or call the manufacturer or dealer of those devices for additional information.

When your vehicle is recovered, you will need to reprogram the Integrated HomeLink® Universal Transceiver with your new transmitter information.

FCC Notice:

This device complies with FCC rules part 15. Operation is subject to the following two conditions: (1) This device may not cause harmful interference and (2) This device must accept any interference that may be received, including interference that may cause undesired operation.

This transmitter has been tested and complies with FCC and DOC/MDC rules. Changes or modifications not expressly approved by the party responsible for compliance could void the user's authority to operate the device.

DOC: ISTC 1763K1313

FCC I.D. CV2V67690

MEMO

3 Pre-driving checks and adjustments

Keys 3-2
Nissan vehicle immobilizer system (NVIS) keys 3-2
Doors 3-2
Locking with key 3-3
Locking with inside lock knob.....3-3
Locking with power door lock switch.....3-4
Child safety rear door lock 3-5
Multi-remote control system (if so equipped).....3-5
How to use multi-remote control system.....3-5
Battery replacement 3-8
Hood 3-9
Trunk lid.....3-10
Opener operation 3-10
Key operation 3-10
Interior trunk lid release (if so equipped) 3-11
Fuel filler lid 3-12
Opener operation 3-12
Fuel filler cap 3-12
Steering wheel 3-14
Tilt operation.....3-14
Sunvisors.....3-14
Vanity mirrors 3-14
Mirrors 3-15
Inside mirror.....3-15
Outside mirror remote control 3-15

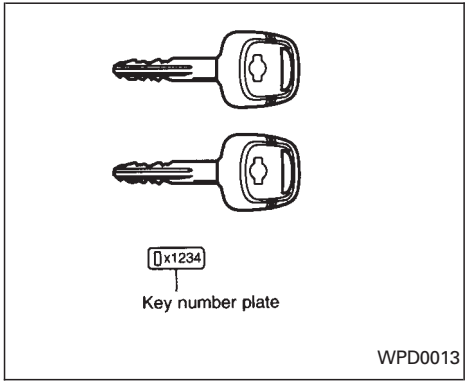

NISSAN VEHICLE IMMOBILIZER SYSTEM (NVIS) KEYS

You can only start your vehicle using the keys which are supplied by your NISSAN dealer. Each key has a transponder chip in the key head which is electronically registered to your vehicle's NVIS. These keys can be used for all the key locks on your vehicle.

Never leave these keys in the vehicle.

A key number plate is supplied with your keys.

Record the key number and keep it in a safe place (such as your wallet), not in the vehicle. NISSAN does not record key numbers so it is very important to keep track of your key number plate.

A key number is only necessary when you have lost all keys and do not have one to duplicate from. If you still have a key, this key can be duplicated by your NISSAN dealer.

New or duplicate keys can only be obtained from your NISSAN dealer and must be registered to the Nissan Vehicle Immobilizer System (NVIS) components in your vehicle by your NISSAN dealer. As many as 5 NVIS keys can be used with one vehicle. At this time, you should bring all NVIS keys that you have to your NISSAN dealer for registration. This is because the registration process will erase the memory of all key codes previously registered into the Nissan Vehicle Immobilizer System. After the registration process, these components will only recognize keys coded into the Nissan Vehicle Immobilizer System (NVIS) during registration. Any key that is not given to your dealer at the time of registration will no longer be able to start your vehicle.

⚠ WARNING

- **Always have the doors locked while driving. Along with the use of seat belts, this provides greater safety in the event of an accident by helping to prevent persons from being thrown from the vehicle. This also helps keep children and others from unintentionally opening the doors, and will help keep out intruders.**
- **Before opening any door, always look for and avoid oncoming traffic.**
- **Do not leave children unattended inside the vehicle. They could unknowingly activate switches or controls. Unattended children could become involved in serious accidents.**

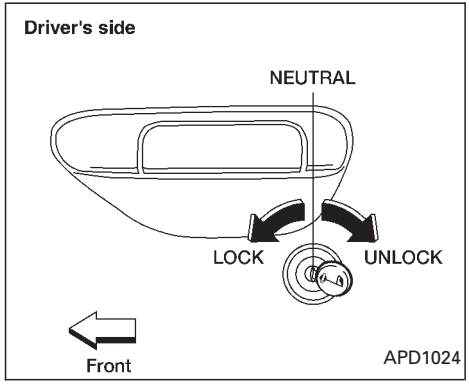

LOCKING WITH KEY

Manual

To lock the door, turn the key toward the front of the vehicle. To unlock, turn it toward the rear.

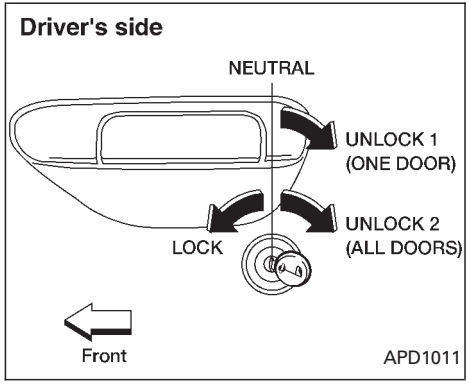

Power

For vehicles equipped with the theft warning system, the power door lock system allows you to lock or unlock all doors simultaneously.

Turning the front door key to the front of the vehicle locks all doors.

Turning the front door key one time to the rear of the vehicle unlocks the corresponding door. From that position, returning the key to neutral (where the key can only be removed and inserted) and turning it to the rear again within 5 seconds unlocks all doors.

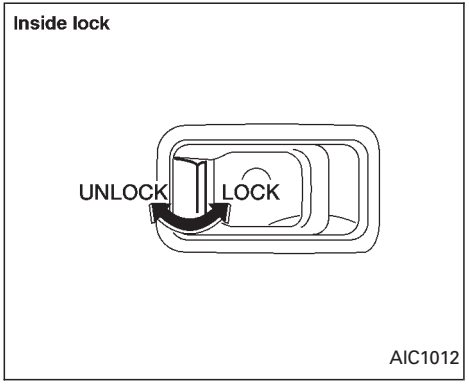

LOCKING WITH INSIDE LOCK KNOB

Manual

To lock a door without the key, move the inside lock knob to the lock position.

When locking a door this way, be certain not to leave the key inside the vehicle.

Power

For vehicles equipped with the theft warning system, moving the inside lock

knob (driver side only) to the lock position locks all doors.

When the inside lock knob (driver side only) is moved to the lock position with the key in the ignition and any door open, all doors will lock and then unlock automatically.

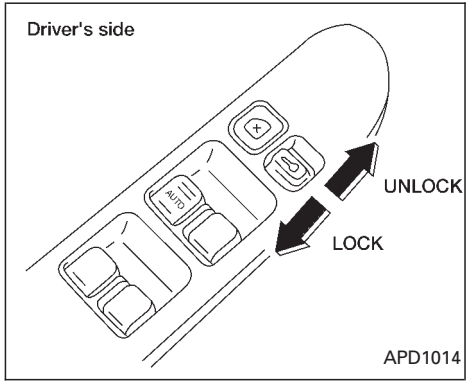

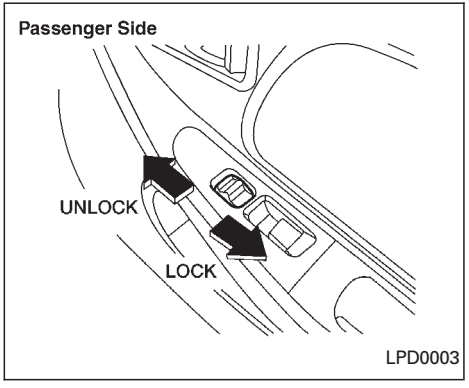

LOCKING WITH POWER DOOR LOCK SWITCH

To lock all the doors without a key, push the door lock switch (driver or front passenger side), to the lock position. When locking the door this way, be certain not to leave the key inside the vehicle.

When the power door lock switch (driver or passenger side) is moved to the lock position with the key in the ignition and any door open, all doors will lock and then unlock automatically.

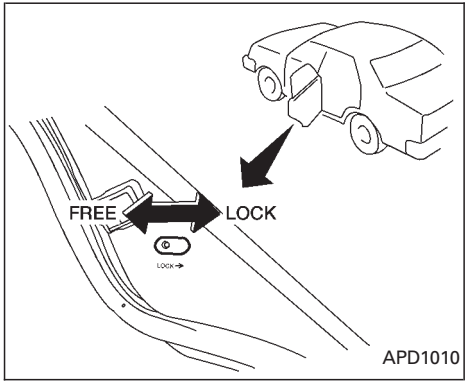

CHILD SAFETY REAR DOOR LOCK

Child safety locks help prevent rear doors from being opened accidentally, especially when small children are in the vehicle.

The child safety lock levers are located on the edge of the rear doors.

When the lever is in the lock position, the door can be opened only from the outside.

MULTI-REMOTE CONTROL SYSTEM (if so equipped)

It is possible to lock/unlock all doors, turn the interior light on and activate the panic alarm by using the remote controller from outside the vehicle.

Be sure to remove the key from the vehicle before locking the doors.

The remote controller can operate at a distance of approximately 33 ft (10 m) from the vehicle. The effective distance depends on the conditions around the vehicle.

As many as four remote controllers can be used with one vehicle. For information concerning the purchase and use of additional remote controllers, contact an authorized NISSAN dealer.

⚠ CAUTION

Listed below are conditions or occurrences which will damage the remote controller:

- **Do not allow the remote controller to become wet.**
- **Do not drop the remote controller.**
- **Do not strike the remote controller sharply against another object.**
- **Do not place the remote controller for an extended period in an area where temperatures exceed 140°F (60°C).**

HOW TO USE MULTI-REMOTE CONTROL SYSTEM

Locking doors

1. Close all windows.
2. Remove the key from the ignition switch.
3. Close all doors.

   All of the doors will lock when the button on the multi-remote controller is pushed even though a door remains open. If the doors are locked while any door is open, the horn beep feature will not function. Also, if the button is pushed while any door is open and the key is in the ignition, all doors will lock and then unlock automatically.
4. Push the button on the multi-remote controller. All doors lock. The hazard lights flash twice and the horn beeps once to indicate all doors are locked.

- When the button is pushed with all doors locked, the hazard lights flash twice and the horn beeps once as a reminder that the doors are already locked.
  The horn may or may not beep once. Refer to ‘‘Silencing the horn beep feature’’ later in this section for details.

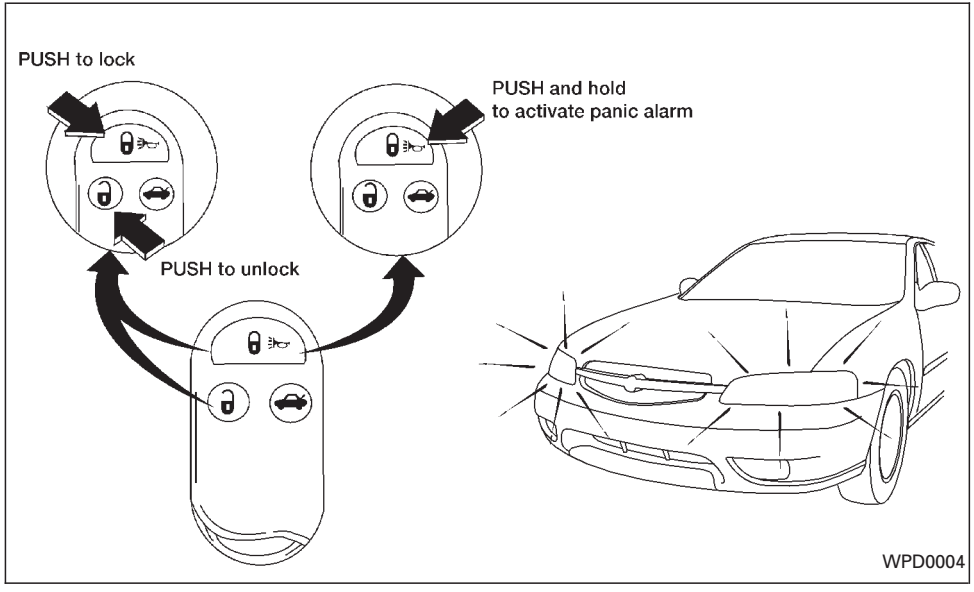

Unlocking doors

1. Push the button on the multi-remote controller. Only the driver’s side door unlocks.
2. Push the button on the multi-remote controller again within five seconds. The passenger doors unlock.
3. The interior light comes on and stays on for 30 seconds when the light switch is in the O position.

Releasing the trunk lid

1. Push the trunk button on the multi-

remote controller for longer than 0.5 second. The trunk release button on the multi-remote controller will not operate when the ignition switch is in the ON position.

2. The trunk lid opens.

Using the panic alarm

If you are near your vehicle and feel threatened, you may activate the alarm to call attention as follows:

1. Push and hold the button on the remote controller for **longer than 1.5 seconds.**
2. The theft warning alarm and headlights will stay on for 30 seconds.
3. The panic alarm stops when:

- it has run for 30 seconds, or
- any button is pressed on the multi-remote controller.

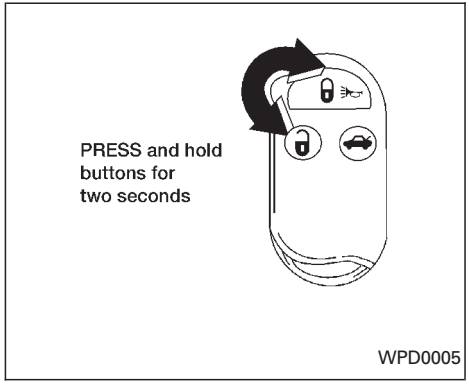

Silencing the horn beep feature

If desired, the horn beep feature can be deactivated using the multi-remote controller. The instructions are on the back of the multi-remote controller.

To deactivate: Press and hold the and buttons **for at least two seconds.**

The hazard lights will flash three times to confirm that the horn beep feature has been deactivated.

To activate: Press and hold the and buttons **for at least two seconds once more.**

The hazard lights will flash three times to confirm that the horn beep feature has been reactivated.

Deactivating the horn feature does not silence the horn if the alarm is triggered.

Using the interior light

The interior light can be turned off without waiting 30 seconds by inserting the key into the ignition or locking the doors with the multi-remote controller or pushing the interior light button to OFF.

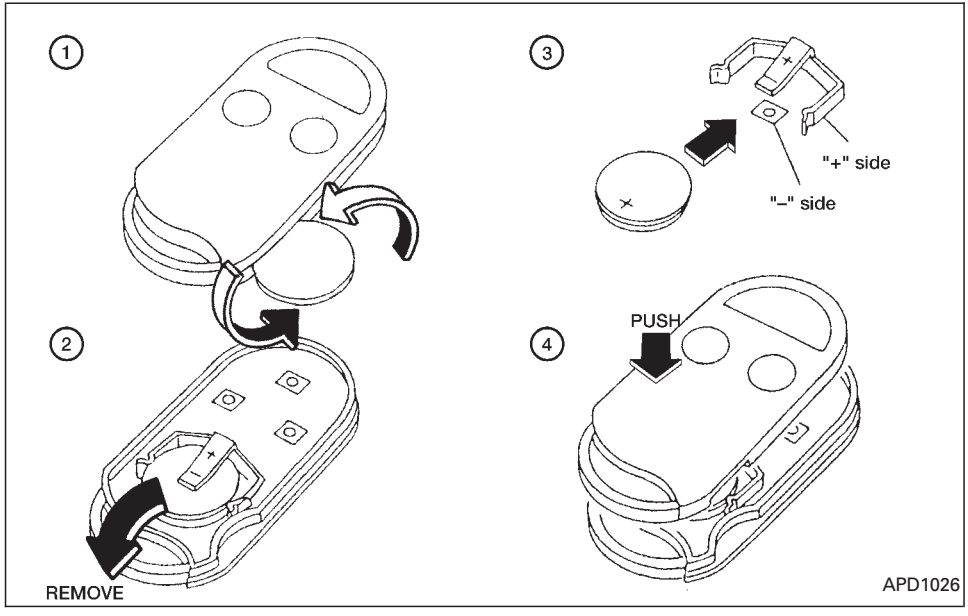

BATTERY REPLACEMENT

Replace the battery in the multi-remote controller as follows:

1. Open the lid using a coin.
2. Replace the battery with a new one. Recommended battery: Sanyo CR2025 or equivalent.
3. Close the lid securely.
4. Press the button, then the button two or three times to check the multi-remote controller operation. Each time the button is pressed, the hazard lights flash once.

If the battery is removed for any reason other than replacement, perform step 4.

- **An improperly disposed battery can hurt the environment. Always confirm local regulations for battery disposal.**
- **The multi-remote controller is water-resistant; however, if it does get wet, immediately wipe completely dry.**
- **The operational range of the multi-remote controller extends to approximately 33 ft (10 m) from the vehicle. This range may vary with conditions.**

FCC Notice:

Changes or modifications not expressly approved by the manufacturer for compliance could void the user's authority to operate the equipment.

This device complies with part 15 of the FCC Rules and RSS-210 of Industry Canada.

Operation is subject to the following two conditions: (1) This device may not

cause harmful interference, and (2) this device must accept any interference received including interference that may cause undesired operation of the device.

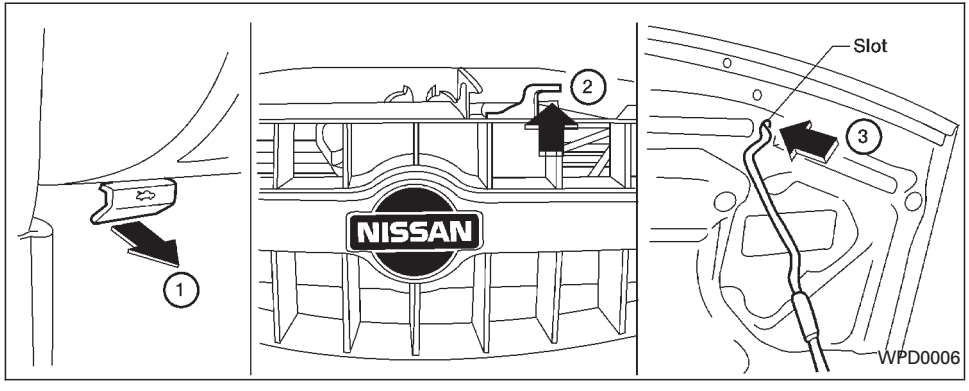

1. Pull the hood lock release handle ① located below the driver side instrument panel; the hood springs up slightly.
2. Lift the lever ② at the front of the hood with your fingertips and raise the hood.
3. Insert the support rod ③ into the slot on the underside of the hood.
4. When closing the hood, return the support rod to its original position, lower the hood to approximately 12 inches above the latch and release it. This allows proper engagement of the hood latch.

⚠ WARNING

- **Make sure the hood is completely closed and latched before driving. Failure to do so could cause the hood to fly open and result in an accident.**
- **If you see steam or smoke coming from the engine compartment, to avoid injury do not open the hood.**

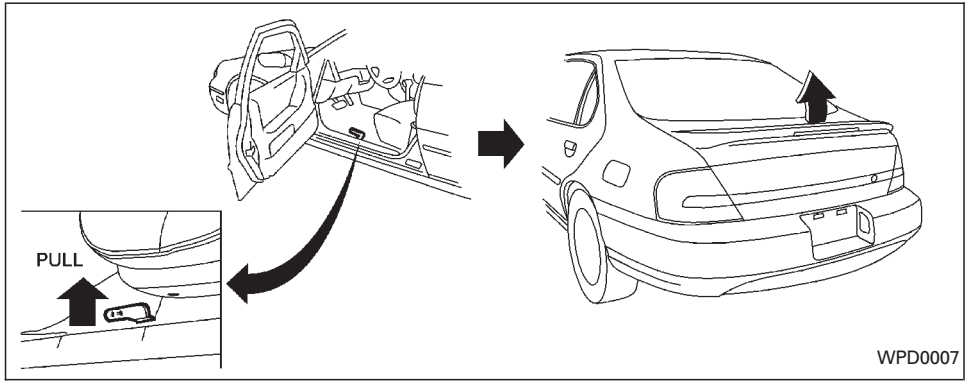

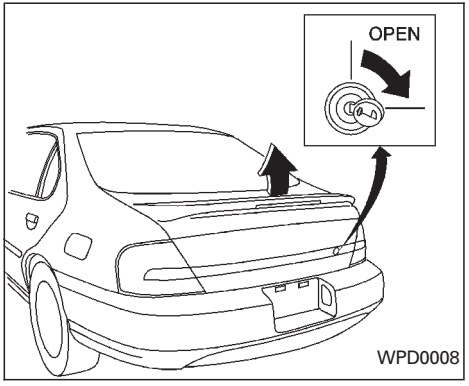

OPENER OPERATION

⚠ WARNING

- **Do not drive with the trunk lid open. This could allow dangerous exhaust gases to be drawn into the vehicle. See ‘‘Exhaust gas’’ in the ‘‘Starting and driving’’ section of this manual.**
- **Closely supervise children when they are around cars to prevent them from playing and becoming locked in the trunk where they could be seriously injured. Keep the car locked, with the trunk closed, when not in use, and prevent children’s access to car keys.**

The trunk lid opener lever is located on the outside of the driver’s seat. To open the trunk lid, pull the opener lever up.

To close the trunk lid, lower and push the trunk lid down securely.

KEY OPERATION

To open the trunk lid, turn the key clockwise. To close the trunk lid, lower and push the trunk lid down securely.

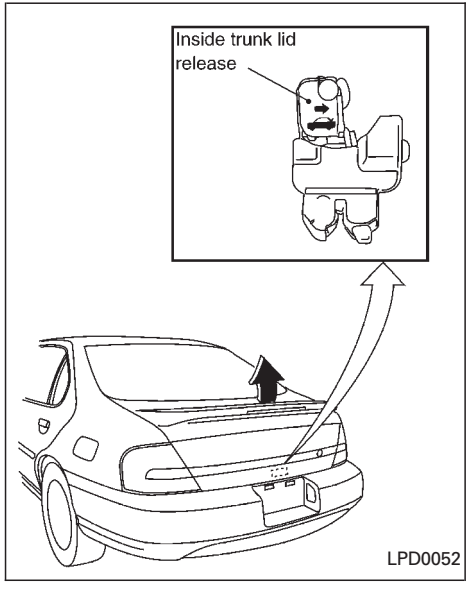

INTERIOR TRUNK LID RELEASE (if so equipped)

⚠ WARNING

Closely supervise children when they are around cars to prevent them from playing and becoming locked in the trunk where they could be seriously injured. Keep the car locked, with the trunk lid closed, when not in use, and prevent children's access to car keys.

The interior trunk lid release mechanism provides a means of escape for children and adults in the event they become locked inside the trunk.

To open the trunk from the inside, rotate the illuminated lever until the lock releases and push up on the trunk lid. The release lever is made of a material that glows in the dark after a brief exposure to ambient light.

The handle is located inside the trunk compartment on the trunk lock at the center of the trunk lid.

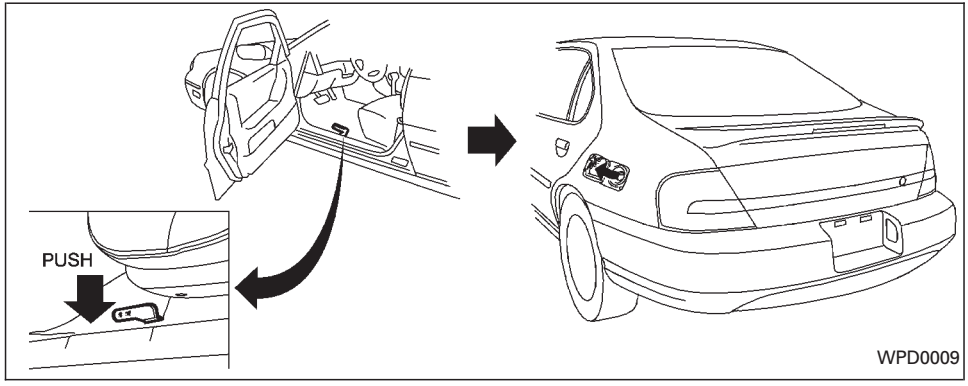

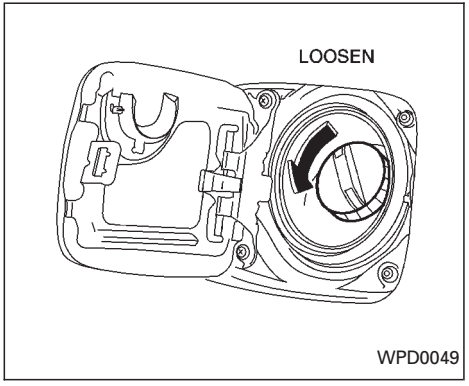

OPENER OPERATION

The fuel filler lid opener lever is located on the outside of the driver's seat. To open the fuel filler lid, push the opener lever down. To lock, close the fuel filler lid securely.

FUEL FILLER CAP

The fuel filler cap is a ratcheting type. Tighten the cap clockwise until ratcheting clicks are heard.

WARNING

- **Gasoline is extremely flammable and highly explosive under certain conditions. You could be burned or seriously injured if it is misused or mishandled. Always stop the engine and do not smoke or allow open flames or sparks near the vehicle when refueling.**
- **Fuel may be under pressure. Turn the cap one-half turn, and wait for any ‘‘hissing’’ sound to stop to prevent fuel from spraying out and possible personal injury. Then remove the cap.**
- **Do not attempt to top off the fuel tank after the fuel pump nozzle shuts off automatically. Continued refueling may cause fuel overflow, resulting in fuel spray and possibly fire.**
- **Use only an original equipment type fuel filler cap as a replacement. It has a built-in safety valve needed for proper operation of the fuel system and emission control system. An incorrect cap can result in a serious malfunction and possible injury.**
- **Never pour fuel into the throttle body to attempt to start your vehicle.**

CAUTION

- **If fuel is spilled on the vehicle body, flush it away with water to avoid paint damage.**
- **Tighten until the fuel filler cap clicks. Failure to tighten the fuel filler cap properly may cause the SERVICE ENGINE SOON malfunction indicator lamp (MIL) to illuminate. If the SERVICE ENGINE SOON lamp illuminates because the fuel filler cap is loose or missing, tighten or install the cap and continue to drive the vehicle. The SERVICE ENGINE SOON lamp should turn off after a few driving trips. If the SERVICE ENGINE SOON lamp does not turn off after a few driving trips, have the vehicle inspected by an authorized NISSAN dealer.**
- **For additional information, see the “Malfunction indicator lamp (MIL)’’ in the “Instrument and controls” section earlier in this manual.**

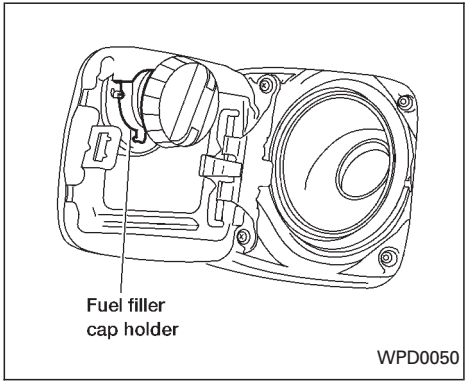

Put the fuel filler cap on the cap holder while refueling.

STEERING WHEEL

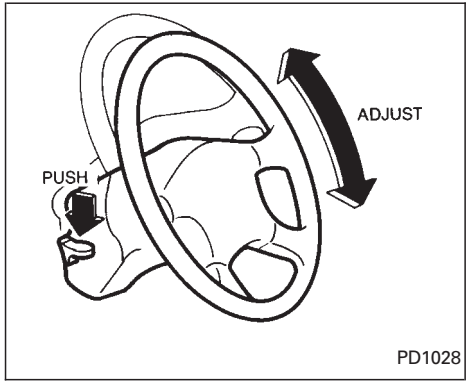

TILT OPERATION

Push the lock lever down and adjust the steering wheel up or down to the desired position.

Pull the lock lever up firmly to lock the steering wheel in place.

WARNING

Do not adjust the steering wheel while driving. You could lose control of your vehicle and cause an accident.

SUNVISORS

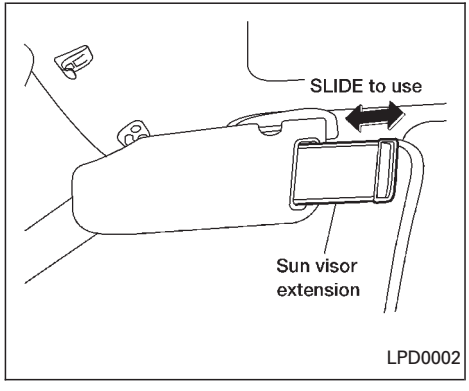

CAUTION

Do not store the main sun visor before storing the extension sun visor.

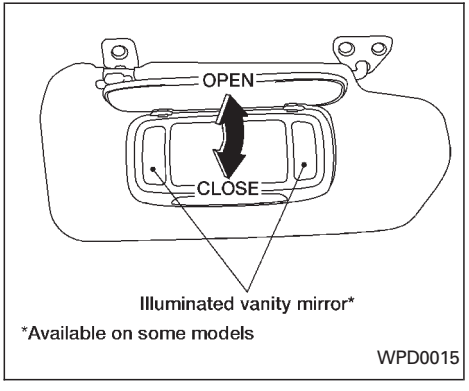

VANITY MIRRORS

To access the vanity mirror, pull the sun visor down and flip open the mirror cover. Some vanity mirrors are illuminated and turn on when the mirror cover is opened.

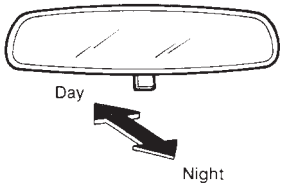

PD1006M

INSIDE MIRROR

The night position reduces glare from the headlights of vehicles behind you at night.

⚠ WARNING

Use the night position only when necessary, because it reduces rear view clarity.

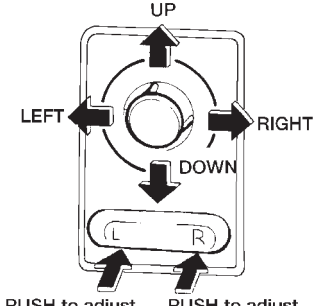

APD0646

OUTSIDE MIRROR REMOTE CONTROL

The outside mirror remote control only operates when the ignition switch is in the ACC or ON position.

Push the right or left side of the switch to select the right or left outside mirror, then adjust using the control lever.

⚠ WARNING

Objects viewed in the outside mirror on the passenger side are closer than they appear. Be careful when moving to the right. Using only this mirror could cause an accident. Use the inside mirror or glance over your shoulder to properly judge distances to other objects.

MEMO

4 Heater, air conditioner and audio systems

Ventilators 4-2
Center ventilators 4-2
Side ventilators 4-2
Heater and air conditioner.....4-3
Controls 4-3
Heater operation.....4-4
Air conditioner operation (if so equipped).....4-5
Air flow charts.....4-6
Servicing air conditioner.....4-9
Audio system.....4-10
FM-AM radio with compact disc (CD) player.....4-10
FM-AM radio with cassette player and compact disc (CD) player.....4-17
FM-AM radio with compact disc (CD) changer (if so equipped) 4-24
Antenna 4-37
Car phone or CB radio.....4-37

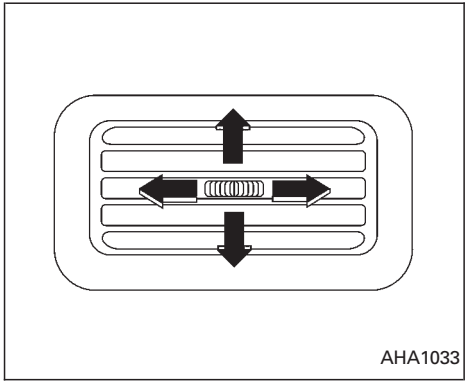

CENTER VENTILATORS

Adjust air flow direction by moving the ventilator slide.

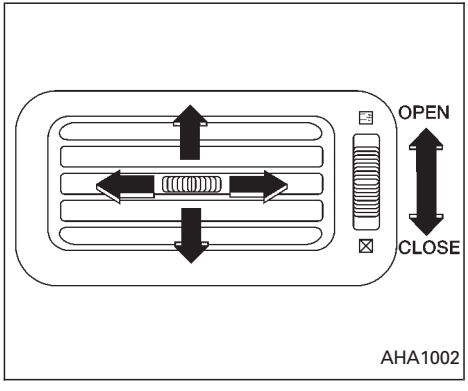

SIDE VENTILATORS

You can open or close the side ventilators by using the dial located at the side of the ventilators. Adjust air flow direction by moving the ventilator slide.

⊠ : This symbol indicates a vent is closed.

≋ : This symbol indicates a vent is open.

HEATER AND AIR CONDITIONER

WARNING

- **The air conditioner cooling function operates only when the engine is running.**
- **Do not leave children, impaired adults, or pets alone in your vehicle. On hot sunny days, temperatures in a closed vehicle could quickly become high enough to cause severe or possibly fatal injuries to people or animals.**
- **Do not use the recirculation mode for long periods as it may cause the interior air to become stale and the windows to fog up.**
- **Positioning of the heating or air conditioning controls should not be done while driving, so full attention may be given to vehicle operation.**

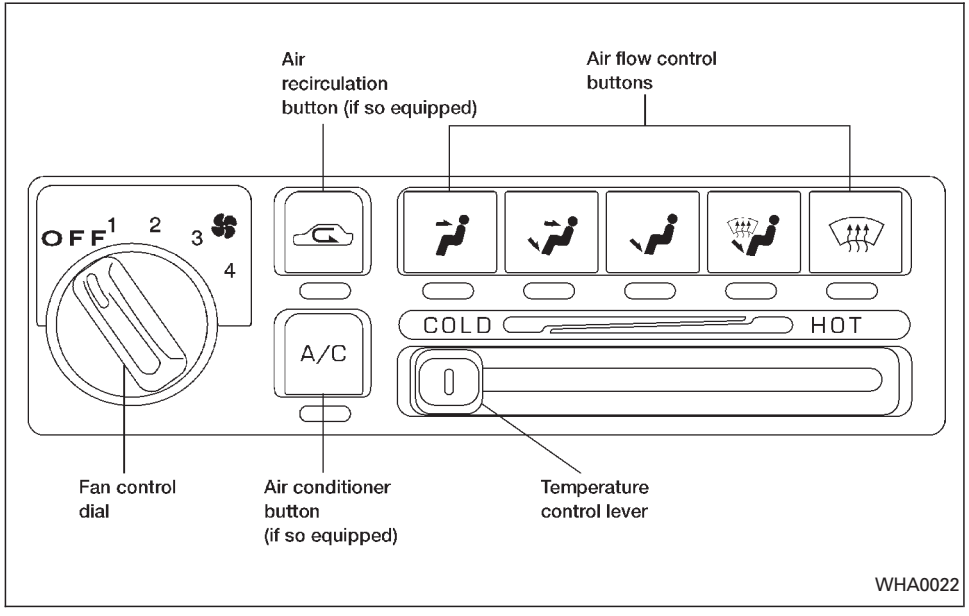

CONTROLS

Fan control dial

This dial turns the fan on and off, and controls fan speed.

Air flow control buttons

These buttons allow you to select the air flow outlets.

— Air flows from center and side ventilators.

— Air flows from center and side ventilators and foot outlets.

— Air flows mainly from foot outlets.

— Air flows from defroster outlets and foot outlets.

— Air flows mainly from defroster outlets.

Temperature control lever

This lever allows you to adjust the temperature of the outlet air.

Air recirculation button (if so equipped)

Off position (Indicator light off):

Outside air is drawn into the passenger compartment and distributed through the selected outlet.

Use the off position for normal heater or air conditioner operation.

On position (Indicator light on):

Interior air is recirculated inside the vehicle.

Push the button to the on position when:

- driving on a dusty road.
- to avoid traffic fumes.
- for maximum cooling when using the air conditioner

Air conditioner button (if so equipped)

This button is provided only on vehicles equipped with an air conditioner.

Start the engine, turn the fan control dial to the desired (1 to 4) position and push the A/C button to turn on the air conditioner. The indicator light comes on when the air conditioner is operating. To stop the air conditioner, push the switch again.

The air conditioner cooling function operates only when the engine is running.

HEATER OPERATION

Heating

This mode is used to direct heated air to the foot outlets. Some air also flows from the defroster outlets.

1. Push the button to the off position for normal heating.
2. Push the button in.
3. Move the fan control dial to the desired position.
4. Move the temperature control lever to the desired position between the middle and the HOT position.

Ventilation

This mode directs outside air to the side and center ventilators.

1. Push the button to the off position.
2. Push the button in.
3. Move the fan control dial to the desired position.
4. Move the temperature control lever to the desired position.

Defrosting or defogging

This mode is used to defrost/defog the windows.

1. Push the button in.
2. Move the fan control dial to the desired position.
3. Move the temperature control lever to the

desired position between the middle and the HOT position.

- To quickly remove ice or fog from the windows, turn on the fan control dial to 4 and the temperature control lever to the full HOT position.
- When the position is selected, the air conditioner automatically turns on (however, the indicator light will not illuminate). This dehumidifies the air which helps defog the windshield. The air recirculation mode automatically turns off, allowing outside air to be drawn into the passenger compartment which helps defog the windshield.

Bi-level heating/cooling

This mode directs air from the side, center and foot outlets.

1. Push the button to the off position.
2. Push the button in.
3. Move the fan control dial to the desired position.
4. Move the temperature control lever to the desired position.

Heating and defogging

This mode heats the interior and defogs the windshield.

1. Push the button in.
2. Move the fan control dial to the desired position.
3. Move the temperature control lever to the desired position between the middle and the HOT position.

Operating tips

- **Clear snow and ice from the wiper blades and air inlet in front of the windshield. This improves heater operation.**
- When the or switch is selected, the air recirculation mode automatically turns off.

  Outside air is drawn into the passenger compartment to improve the defogging performance.

AIR CONDITIONER OPERATION (if so equipped)

Start the engine, move the fan control dial to the desired (1 to 4) position and push in the A/C button to activate the air conditioner. When the air conditioner is on, cooling and dehumidifying functions are added to the heater operation.

The air conditioner cooling function operates only when the engine is running.

Cooling

This mode is used to cool and dehumidify the air.

1. Push the button to the off position.
2. Push the button in.
3. Move the fan control dial to the desired position.
4. Push on the air conditioner button. The indicator light comes on.
5. Move the temperature control lever to the desired position.

- For quick cooling when the outside temperature is high, push the button to the on position (Indicator light on). Be sure to return the button to the off position for normal cooling.

Dehumidified heating

This mode is used to heat and dehumidify.

1. Push the button to the off position.

2. Push the button in.
3. Move the fan control dial to the desired position.
4. Push on the air conditioner button. The indicator light comes on.
5. Move the temperature control lever to the desired position.

Dehumidified defogging

This mode defogs the windows and dehumidifies the air.

1. Push the button in.

   When the position is selected, the air conditioner automatically turns on (however, the indicator light will not illuminate). This dehumidifies the air which helps defog the windshield. The air recirculation mode automatically turns off, allowing outside air to be drawn into the passenger compartment which helps defog the windshield.
2. Move the fan control dial to the desired position.
3. Move the temperature control lever to the desired position.

Outside air is drawn into the passenger compartment to improve the defogging performance.

Operating tips

- Keep the windows and sun roof closed while the air conditioner is in operation.
- After parking in the sun, drive for two or three minutes with the windows open to vent hot air from the passenger compartment. Then, close the windows. This allows the air conditioner to cool the interior more quickly.
- **The air conditioner system should be operated for approximately ten minutes at least once a month. This helps prevent damage to the system due to lack of lubrication.**
- If the engine coolant temperature gauge exceeds the H (hot) position, turn the air conditioner off. See ‘‘If your vehicle overheats’’ in the ‘‘In case of emergency’’ section of this owner’s manual for additional information.

AIR FLOW CHARTS

The charts on the following pages show the switch and lever positions for **MAXIMUM and QUICK** heating, cooling, or defrosting.

Defrosting

Defogging

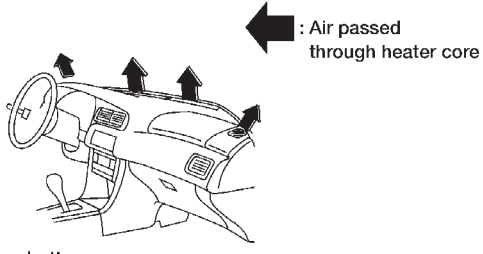

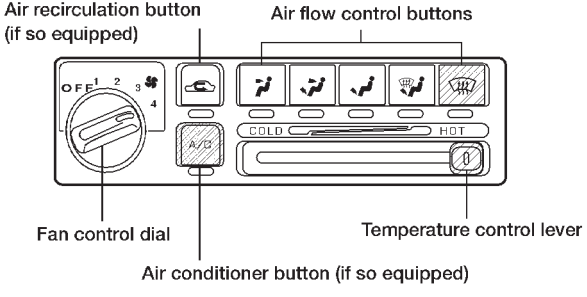

A/C button (if so equipped)	Air recirculation (if so equipped)	Air control	Temp. control	Fan control
ON	OFF		HOT (RIGHT)	4

WHA0017

Heating

Heated air at center vents

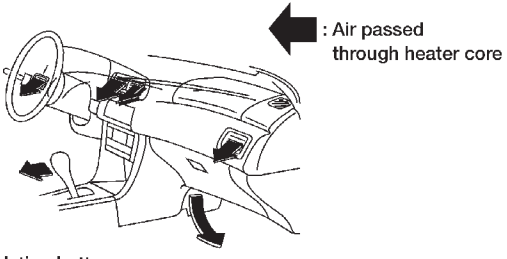

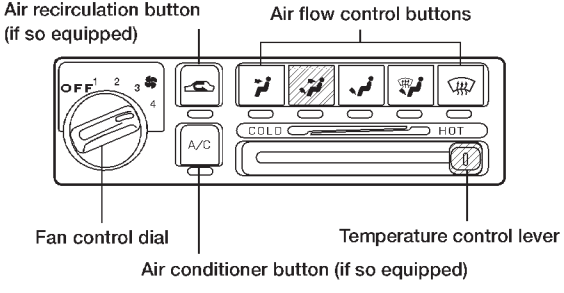

A/C button (if so equipped)	Air recirculation (if so equipped)	Air control	Temp. control	Fan control
OFF	OFF		HOT (RIGHT)	4

WHA0018

Heating

No air at center vents

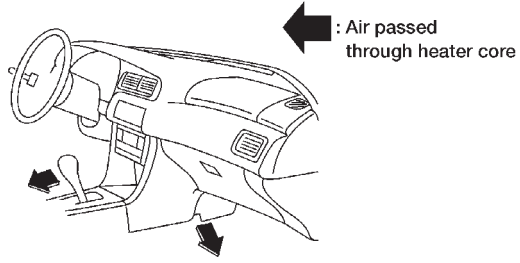

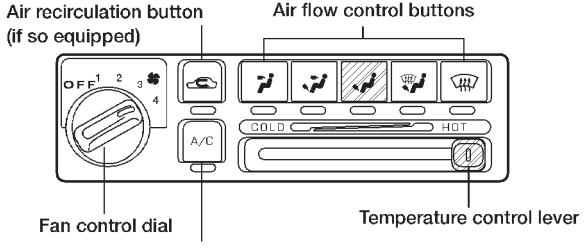

A/C button (if so equipped)	Air recirculation (if so equipped)	Air control	Temp. control	Fan control
OFF	OFF		HOT (RIGHT)	4

WHA0021

Heating & Defrosting/ Defogging

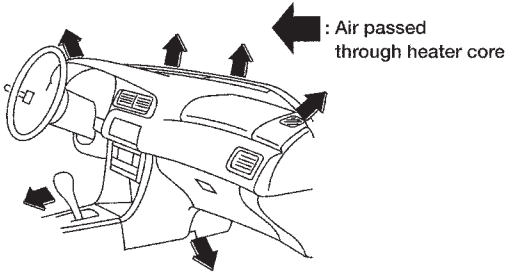

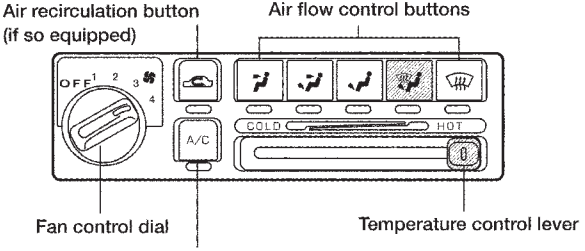

A/C button (if so equipped)	Air recirculation (if so equipped)	Air control	Temp. control	Fan control
OFF	OFF		HOT (RIGHT)	4

WHA0019

Cooling

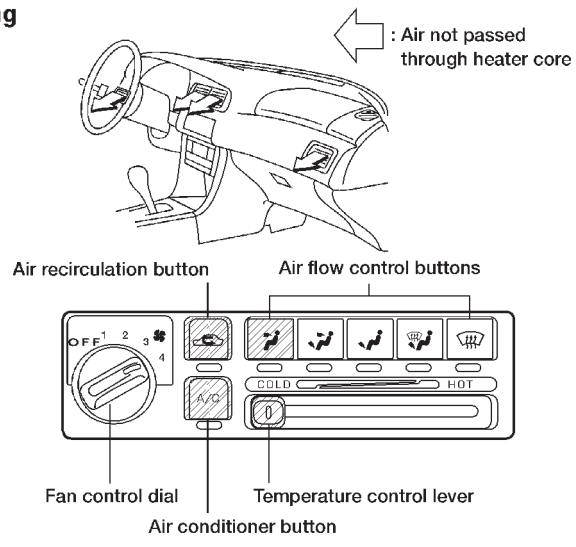

A/C button	Air recirculation	Air control	Temp. control	Fan control
ON	ON		COLD (LEFT)	4

WHA0020

SERVICING AIR CONDITIONER

The air conditioner system in your NISSAN vehicle is charged with a refrigerant designed with the environment in mind.

This refrigerant does not harm the earth's ozone layer.

Special charging equipment and lubricant is required when servicing your NISSAN air conditioner. Using improper refrigerants or lubricants will cause severe damage to your air conditioner system. See ''Air conditioner system refrigerant and lubricant recommendations'' in the ''Technical and consumer information'' section of this manual.

Your NISSAN dealer is able to service your environmentally ''friendly'' air conditioning system.

⚠ WARNING

The air conditioner system contains refrigerant under high pressure. To avoid personal injury, any air conditioner service should be done only by an experienced technician with proper equipment.

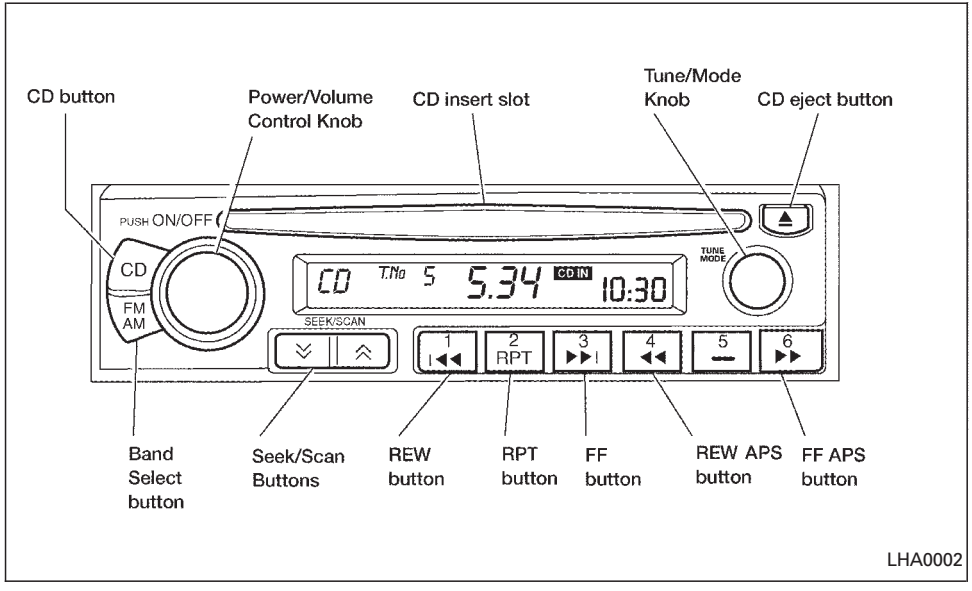

FM-AM RADIO WITH COMPACT DISC (CD) PLAYER

Audio main operation

To turn the radio on, turn the ignition key to ACC or ON. If you listen to the radio with the engine not running, turn the key to the ACC position.

Radio reception is affected by station signal strength, distance from radio transmitter, buildings, bridges, mountains and other external influences. Intermittent changes in reception quality normally are caused by these external influences.

Using a cellular phone in or near the vehicle may influence radio reception quality.

Power/Volume control

Turn the ignition key to ACC or ON, then push the power/volume control knob. The mode (radio or CD) which was playing immediately before the system was turned off resumes playing. When no CD is loaded, the radio comes on. Pushing the power/volume control knob again turns the system off.

Turn the power/volume control knob to the right to increase volume or to the left to decrease volume.

Adjusting tone quality and speaker balance

To adjust Bass, Treble, Fader or Balance, press the TUNE MODE knob for less than 1.5 seconds. A beep signals entry into the audio adjustment mode and BASS will appear in the display. Rotate the TUNE MODE knob to adjust Bass (BASS) to the desired level.

Press the TUNE MODE knob a second time and TREB appears in the display. Rotate the TUNE MODE knob to adjust Treble (TREB) to the desired level.

Press the TUNE MODE knob a third time and FAD appears in the display. Fader (FAD) adjusts the sound between the front and rear speaker. Rotate the TUNE MODE knob to adjust Fader (FAD) to the desired level.

Press the TUNE MODE knob a fourth time and BAL appears in the display. Balance (BAL) adjusts the sound between the right and left speakers. Rotate the TUNE MODE knob to adjust Balance (BAL) to the desired level.

After 10 seconds, the radio or CD display will reappear. Once the sound quality is set to the desired level, press the TUNE MODE knob repeatedly until the radio or CD display reappears.

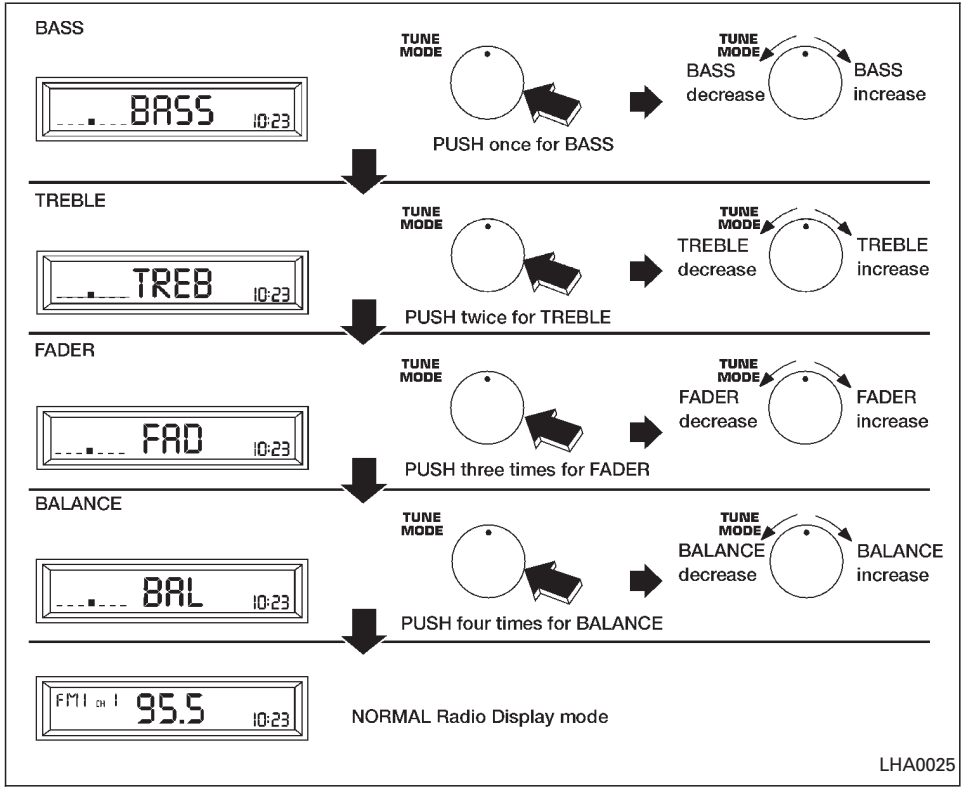

Clock operation

The clock is on in the display regardless of what mode, media, or function the radio is in as long as the ignition is in ACC or ON.

Clock set

To adjust the clock, press the TUNE MODE knob for longer than 1.5 seconds. A beep signals entry into the clock adjustment mode and CL appears in the display. The hours will be blinking. Rotate the TUNE MODE knob to adjust the hours to the desired level.

Press the TUNE MODE knob a second time and the minutes will start to blink. Rotate the TUNE MODE knob to adjust the minutes to the desired level.

After 10 seconds, the radio or CD display will reappear. Once the clock is set to the desired level, press the TUNE MODE knob repeatedly until the radio or CD display reappears.

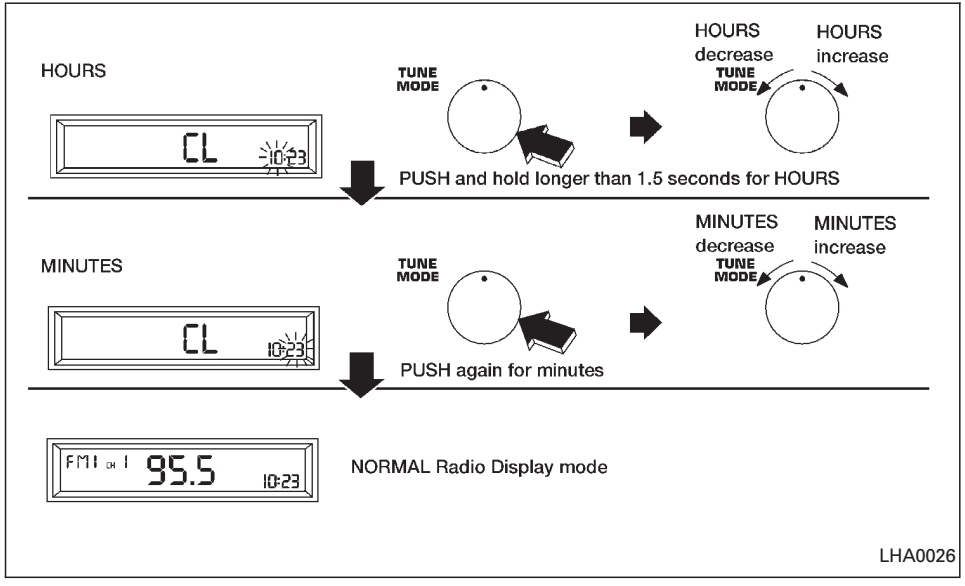

FM/AM radio operation

FM/AM band select

Push the band select button (FM/AM) to change from AM to FM1 to FM2 reception.

The FM stereo indicator, ST, illuminates during FM stereo reception. When the stereo broadcast signal is weak, the radio automatically changes from stereo to monaural reception.

TUNE MODE Knob

⚠ WARNING

The radio should not be tuned while driving so full attention may be given to vehicle operation.

Rotate the TUNE MODE knob to the right or to the left for manual tuning.

SEEK/SCAN tuning

SEEK tuning

Push the SEEK/SCAN tuning button ≫ or ≪ for less than 1.5 seconds. SEEK tuning begins from high to low frequencies or low to high frequencies, depending on which button is pressed, and stops at the next broadcasting station. Once the highest broadcasting station is reached, the radio continues in the SEEK mode at the lowest broadcasting station. If using the ≫ button, once the lowest broadcasting station is reached, the radio continues in the SEEK mode at the highest broadcasting station.

SCAN tuning

Push the SEEK/SCAN tuning button ≫ or ≪ for more than 1.5 seconds. SCAN appears in the display window. SCAN tuning begins from high to low frequencies or low to high frequencies, depending on which button is pressed. SCAN tuning stops at each broadcasting station for five seconds. Pushing the button again during this five second period stops SCAN tuning and the radio remains tuned to that station.

Station memory operations

Six stations can be set for the AM band. 12 stations can be set for the FM band (six for FM1, six for FM2).

1. Push band select button (FM/AM) to select AM, FM1, or FM2. The selected band illuminates in the display.
2. Tune to the desired station.
3. Push the desired station select button for more than 1.5 seconds. The radio mutes when the select button is pushed.
4. When the indicator illuminates in the display and the sound resumes, memorizing is complete.
5. Other station select buttons can be set in the same manner.

If the battery cable is disconnected, or if the radio fuse opens, the radio memory is cancelled. In that case, reset the desired stations.

COMPACT DISC (CD) player operation

Turn the ignition key to the ACC or ON position, and carefully insert the compact disc into the slot with the label side up. The compact disc is automatically pulled into the slot and starts to play.

If the radio is already operating, it automatically turns off and the compact disc begins to play.

⚠ CAUTION

Do not force the compact disc into the slot. This could damage the player.

CD button

When this button is pushed with the compact disc loaded and the radio playing, the radio turns off and the compact disc starts to play.

When power/volume control knob is pushed while the compact disc is playing, the compact disc stops playing.

FF (Fast forward), REW (Rewind)

When the ▶▶ 6 or ◀◀ 4 button is pushed while the compact disc is playing, the compact disc plays at an increased speed while fast forwarding or rewinding. When the button is released, the compact disc returns to normal play speed.

APS (Automatic Program Search) FF, APS REW

When the ▶▶| 3 button is pushed while the compact disc is playing, the selection following the present one starts to play from the beginning. Push or hold the ▶▶| 3 button several times to skip several selections. Each time the button is pushed, the CD advances one selection. (When the last selection on the compact disc is skipped, the first selection is played.)

When the |◀◀ 1 button is pushed, the selection being played returns to the beginning. Push or hold the |◀◀ 1 button several times to skip back several selections. Each

time the button is pushed, the CD moves back one selection.

2 RPT (Repeat)

When the 2 RPT repeat button is pushed while the compact disc is playing, the play pattern changes as follows.

1: The current selection is repeated.

MIX: Selections are played at random, not following the sequence on the compact disc. The same program may be repeated twice.

Normal (no symbol): All selections are played in sequence, and the compact disc stops when the last selection is finished.

When a new compact disc is inserted, the play pattern automatically changes to the ''Normal'' play pattern.

CD EJECT

When the ⏏ button is pushed with a compact disc loaded, the compact disc ejects.

When the ⏏ button is pushed while the compact disc is playing, the compact disc ejects and the system turns off.

If the compact disc ejects and is not removed within 10 seconds, it is pulled back into the slot.

DISC indicator light

CD IN appears on the display when a CD is loaded with the system ON.

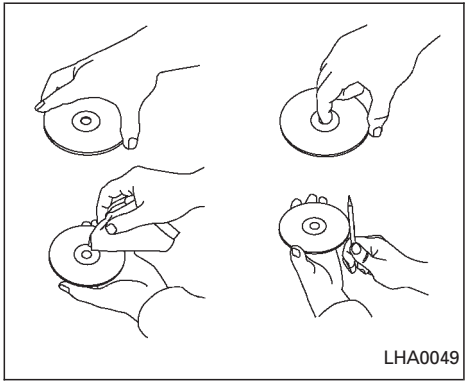

CD care and cleaning

- Handle a CD by its edges. Never touch the surface of the disc. Do not bend the disc.
- Always place the discs in the storage case when they are not being used.
- To clean a disc, wipe the surface from the center to the outer edge using a clean, soft cloth. Do not wipe the disc using a circular motion.

  Do not use a conventional record cleaner or alcohol intended for industrial use.

- A new disc may be rough on the inner and outer edges. Remove the rough edges by rubbing the inner and outer edges with the side of a pen or pencil as illustrated.

⚠ CAUTION

- **During cold weather or rainy days, the player may malfunction due to the humidity. If this occurs, remove the CD and dehumidify or ventilate the player completely.**
- **The player may skip while driving on rough roads.**
- **The CD player sometimes cannot function when the passenger compartment temperature is extremely high. Decrease the temperature before use.**
- **Do no expose the CD to direct sunlight.**
- **Do not touch the playing surface of the disc.**
- **Do not use 8cm discs. They may cause player damage even if using with the optional adapter.**

- **Recordable compact discs (CD-R) may not function properly in the CD player.**

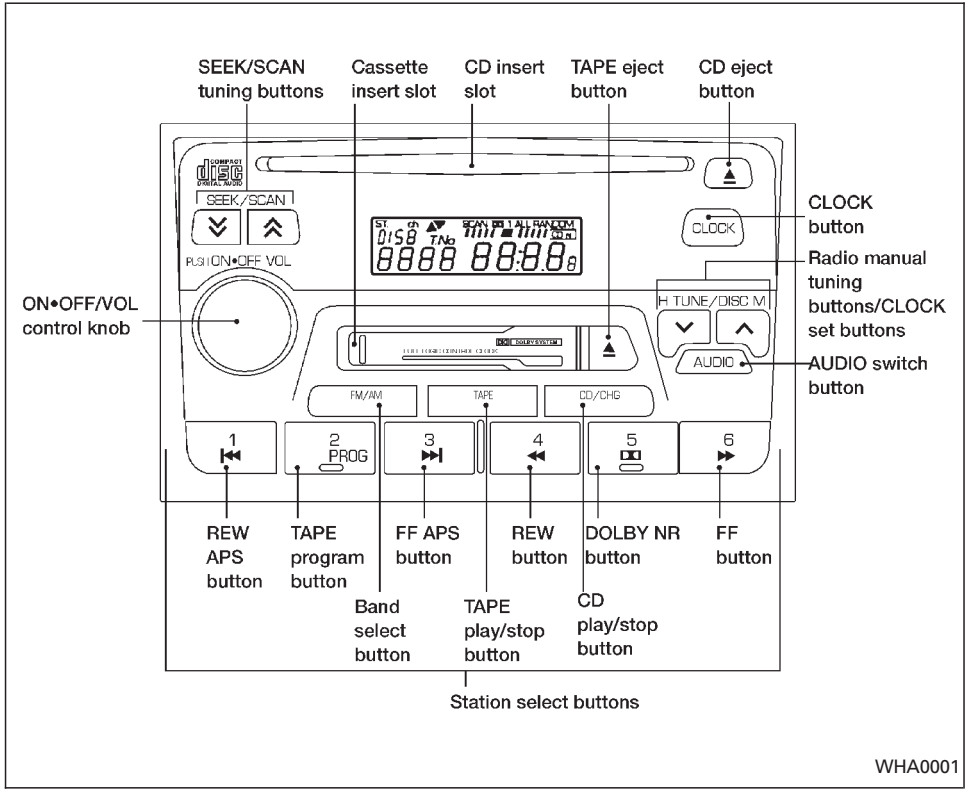

FM-AM RADIO WITH CASSETTE PLAYER AND COMPACT DISC (CD) PLAYER

Audio main operation

To turn the radio on, turn the ignition key to ACC or ON. If you listen to the radio with the engine not running, turn the key to the ACC position.

Radio reception is affected by station signal strength, distance from radio transmitter, buildings, bridges, mountains and other external influences. Intermittent changes in reception quality normally are caused by these external influences.

Using a cellular phone in or near the vehicle may influence radio reception quality.

ON·OFF/VOL control knob

Turn the ignition key to ACC or ON, then push the ON·OFF/VOL control knob button. The mode (radio, tape or CD) which was playing immediately before the system was turned off resumes playing. When no CD or tape is loaded, the radio comes on. Pushing the ON·OFF/VOL control knob button again turns the system off.

Turn the ON·OFF/VOL control knob to the right to increase volume or to the left to decrease volume.

Adjusting tone quality and speaker balance

To adjust the audio levels for bass, treble, balance, and fader, push the audio button and adjust the level with the TUNE/DISC buttons.

Press the audio button once for BAS (bass), twice for TRE (treble), three times for FAD (fader), and four times for BAL (balance).

Once the audio level is set the display will return back to radio, cassette or CD display mode after 7 seconds or the audio button can be pressed again within 7 seconds to set the next audio level. Pressing the audio button a fifth time will also return the display back to radio, cassette or CD display mode.

Fader adjusts the sound level between the front and rear speakers, balance adjusts the sound level between the right and left speakers.

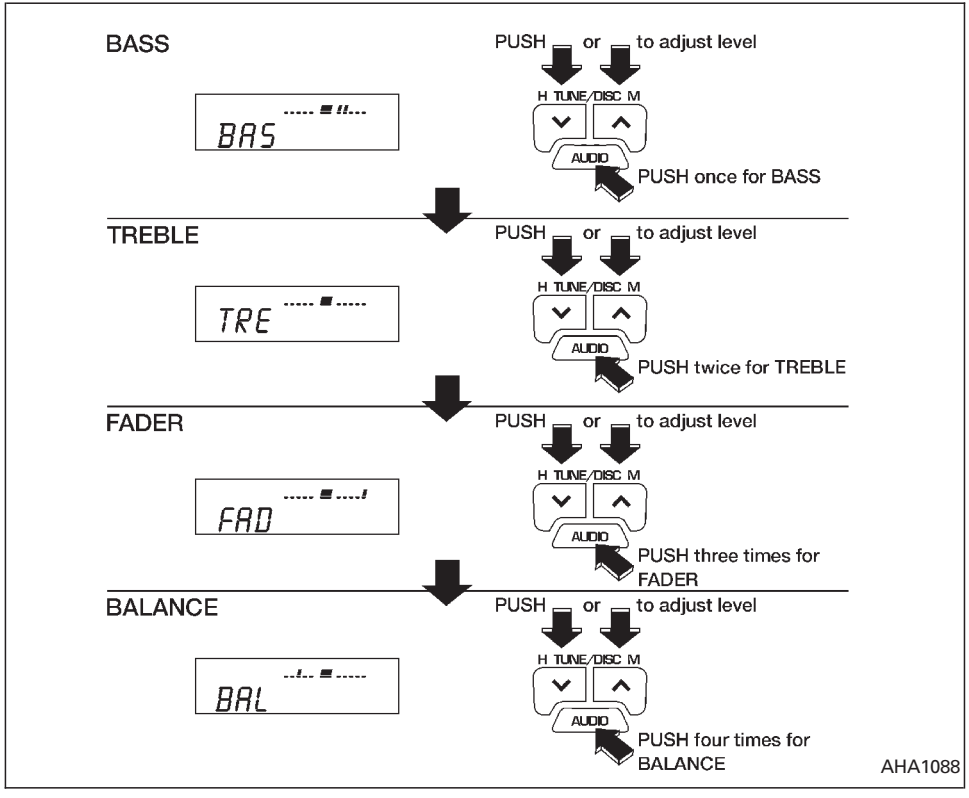

Clock operation

Pressing the clock button alternates the clock and the radio/cassette/CD player options in the display.

Clock set

Depressing the clock and ∨ buttons together sets hours. Depressing the clock and ∧ buttons together sets minutes.

Clock priority mode

In this mode the clock is shown in the display. If any radio, cassette or CD functions are activated, the radio, cassette or CD display illuminates for 10 seconds then returns to the clock mode.

NOTE:

After clock adjustment, the radio is in the clock priority mode.

FM/AM Radio operation

FM/AM band select

Push the FM/AM button to change from AM to FM reception.

The FM stereo indicator, ST, illuminates during FM stereo reception. When the stereo broadcast signal is weak, the radio automatically changes from stereo to monaural reception.

TUNE/DISC

WARNING

The radio should not be tuned while driving so full attention may be given to vehicle operation.

Use the ∨ and ∧ buttons for manual tuning. To move quickly through the channels, hold either of the tuning buttons down.

SEEK/SCAN buttons

SEEK tuning

Push the SEEK/SCAN tuning button ⌃ or ⌄ for less than 0.5 seconds. SEEK tuning begins from high to low frequencies or low to high frequencies, depending on which button is pressed, and stops at the next broadcasting station. Once the highest broadcasting station is reached, the radio continues in the SEEK mode at the lowest broadcasting station. If using the ⌄ button, once the lowest broadcasting station is reached, the radio continues in the SEEK mode at the highest broadcasting station.

SCAN tuning

Push the SEEK/SCAN tuning button ⌃ or ⌄ for more than 0.5 seconds. SCAN illuminates in the display, and the radio station blinks. SCAN tuning begins from low to high frequencies or high to low frequencies, depending on which button is pressed. SCAN tuning stops at each broadcasting station for five seconds. During the SCAN function, SCAN comes on and the radio station blinks in the display window. Pushing the button again during this five second period stops SCAN tuning and the radio remains tuned to that station.

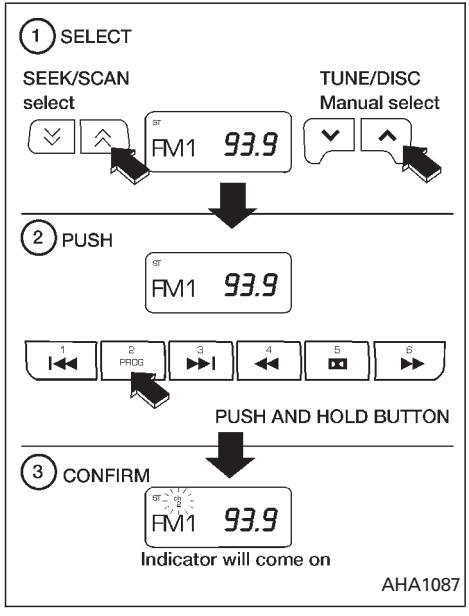

Station memory operations

Six stations can be set for the AM band. 12 stations can be set for the FM band (six for FM1, six for FM2).

1. Push FM/AM to select AM, FM1, or FM2. The selected band illuminates in the display.
2. Tune to the desired station.
3. Push the desired station select button for more than 1.5 seconds. For example, in the illustrations ch2 is to be memorized. The radio mutes when the select button is pushed.
4. The indicator, ch2, then illuminates in the display and the sound resumes. Memorizing is now complete.
5. Other station select buttons can be set in the same manner.

If the battery cable is disconnected, or if the radio fuse opens, the radio memory is cancelled. In that case, reset the desired stations.

Cassette tape player operation

Precautions on cassette tape player operation

- **To maintain good quality sound, NISSAN recommends using cassette tapes of 60 minutes or shorter in length.**
- **Cassette tapes should be removed from the player when not in use. Store cassettes in their protective cases and away from direct sunlight, heat, dust moisture or magnetic sources.**
- **Direct sunlight can cause the cassette to become deformed. The use of deformed cassettes may cause the cassette to jam in the player.**
- **Do not use cassettes that have peeling or loose labels. If used, the label could jam in the player.**
- **If a cassette has loose tape, insert a pencil through one of the cassette hubs and rewind the tape firmly. Loose tape may cause jamming and wavering sound quality.**
- **Over a period of time, the playback head, capstan and pinch roller may collect a tape coating residue as the tape is played. This residue accumulation can cause a weak or wavering sound and should be removed periodically with a head cleaning tape. If the residue is not removed periodically, the player may need to be disassembled for cleaning.**

TAPE PLAY/STOP

When the TAPE button is pushed with the system turned off and a tape loaded, the system comes on and the tape plays. The word TAPE illuminates in the display.

When the TAPE button is pushed with either the radio or compact disc turned on and a tape loaded, the compact disc or the radio turns off and the tape plays.

FF (Fast Forward), REW (Rewind)

Push the ▶▶ button to fast forward the tape. Push the ◀◀ button to rewind the tape. Either REW or FF illuminates in the display. To stop the FF or REW function, press the TAPE , ▶▶ , or ◀◀ buttons.

APS (Automatic Program Search) FF, APS REW

When the ▶▶I button is pushed while the tape is being played, the tape runs quickly, stops, then plays the next selection from the beginning. Push the ▶▶I button several times to skip several selections. Each time the button is pushed, the tape fast forwards one additional selection. This number appears in the display window. The tape can be fast forwarded through up to nine selections. (for example: 7 in the display indicates that the ▶▶I button has been pushed seven times to skip forward through seven selections).

When the I◀◀ button is pushed, the selection being played starts again from the beginning. Push the I◀◀ button several times to rewind several selections. Each time the I◀◀ button is pushed, the tape rewinds back one additional selection. The number of selections skipped appears in the display window as a negative number (for example: −7 in the display indicates that the I◀◀ button has been pushed seven times to rewind back through seven selections).

Either the FF or REW blinks in the display when the I◀◀ or ▶▶I button is pushed.

The system searches for the blank intervals between selections. If there is a blank interval within one selection or there is no interval between selections, the system may not stop in the desired or expected location.

PROG (Program)

Push the PROG button to change the tape side while the tape is being played.

The cassette tape automatically changes directions to play the other side when the first side is complete.

Dolby NR (Noise Reduction)

Push the button for Dolby NR encoded tapes to reduce high frequency tape noise. The DD indicator illuminates in the display.

Dolby NR is manufactured under license from Dolby Laboratories Licensing Corporation. DOLBY NR and the double-D symbol are trademarks of Dolby Laboratories Licensing Corporation.

Metal or chrome tape usage

The cassette player is automatically set to high performance play when playing a metal or chrome cassette tape.

TAPE EJECT

Push the ⏏ button to eject the cassette tape.

COMPACT DISC (CD) player operation

Turn the ignition key to the ACC or ON position, and carefully insert the compact disc into the slot with the label side up. The compact disc is automatically pulled into the slot and starts to play.

If the radio or cassette tape is already operating, it automatically turns off and the compact disc begins to play.

⚠ CAUTION

Do not force the compact disc into the slot. This could damage the player.

CD/CHG button

When the CD/CHG button is pushed with the compact disc loaded and the tape or the radio playing, the tape or radio turns off and compact disc starts to play.

FF (Fast Forward), REW (Rewind)

When the 6 ▶▶ or 4 ◀◀ button is pushed while the compact disc is playing, the compact disc plays at an increased speed while fast forwarding or rewinding. When the button is released, the compact disc returns to normal play speed.

APS (Automatic Program Search) FF, APS REW

When the 3 ▶▶| button is pushed while the compact disc is playing, the selection following the present one starts to play from the beginning. Push the 3 ▶▶| button several times to skip several selections. Each time the button is pushed, the CD advances one additional selection. The number appears in the display window. (When the last selection on the compact disc is skipped, the first selection is played.)

When the 1 |◀◀ button is pushed, the selection being played returns to the beginning. Push the 1 |◀◀ button several times to skip back several selections. Each time the button is pushed, the CD moves back one selection.

PROG (Program)

When the 2 PROG button is pushed while the compact disc is playing, the play pattern changes as follows.

RPT (Repeat)

1. The current selection is repeated.

RANDOM: Selections are played at random, not following the sequence on the compact disc. The same program may be repeated twice.

Normal (no symbol): All selections are played repeatedly in sequence.

When a new compact disc is inserted, the play pattern automatically changes to the "Normal" play pattern.

CD EJECT

When the ⏏ button is pushed with a compact disc loaded, the compact disc ejects.

When the ⏏ button is pushed while the compact disc is playing, the compact disc ejects and the system turns off.

If the compact disc ejects and is not removed within 10 seconds, it is pulled back into the slot.

DISC indicator light

CD IN appears in the display when a compact disc is loaded with the system on.

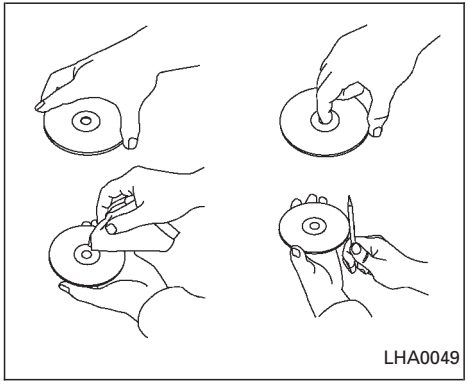

CD care and cleaning

- Handle a CD by its edges. Never touch the surface of the disc.
- To clean a disc, wipe the surface from the center to the outer edge using a clean, soft cloth. Do not wipe the disc using a circular motion.

  Do not use a conventional record cleaner or alcohol intended for industrial use.
- A new disc may be rough on the inner and outer edges. Remove the rough edges by rubbing the inner and outer edges with the side of a pen or pencil as illustrated.

⚠ CAUTION

- **During cold weather or rainy days, the player may malfunction due to the humidity. If this occurs, remove the CD and dehumidify or ventilate the player completely.**
- **The player may skip while driving on rough roads.**
- **The CD player sometimes cannot function when the passenger compartment temperature is extremely high. Decrease the temperature before use.**
- **Do not expose the CD to direct sunlight.**
- **Do not touch the playing surface of the disc.**
- **Do not use 8cm discs. They may cause player damage even if using with optional adapter.**
- **Recordable compact discs (CD-R) may not function properly in the CD player.**

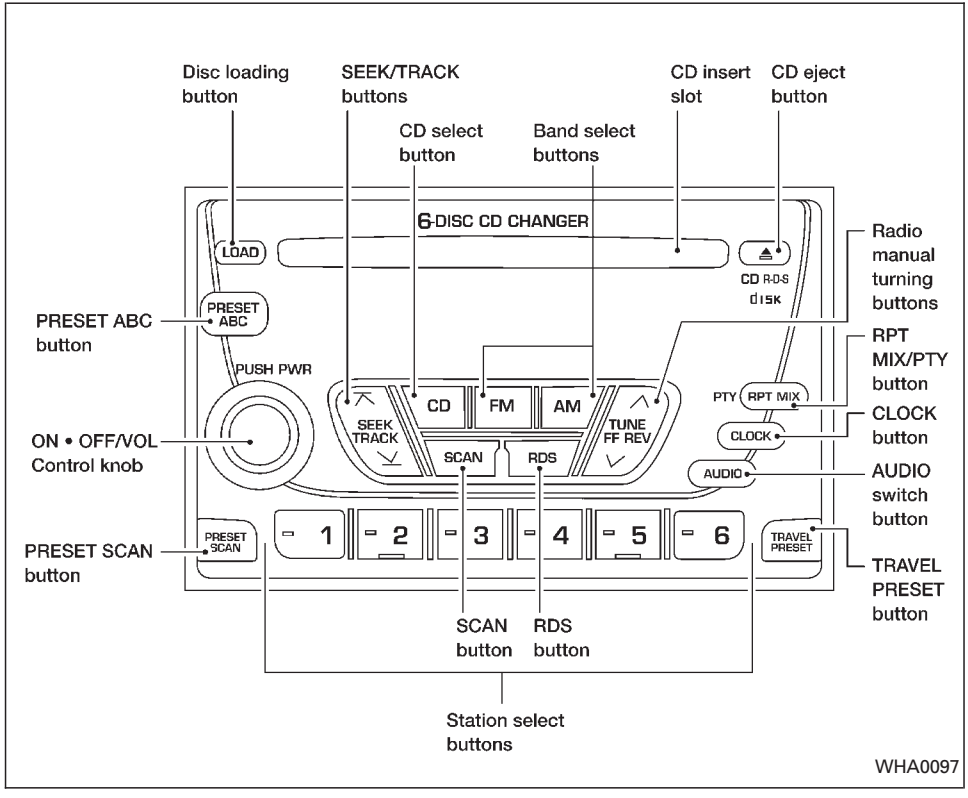

FM-AM RADIO WITH COMPACT DISC (CD) CHANGER (if so equipped)

ON·OFF/VOL control

Turn the ignition key to the ACC or ON position, then push the PWR control knob. If you listen to the radio with the engine not running, turn the key to the ACC position. The mode (radio or CD) that was playing immediately before the system was turned off resumes playing.

When no CD is loaded, the radio comes on. Pushing the PWR control knob again turns the system off.

Turn the PWR control knob to the right to increase volume or to the left to decrease volume.

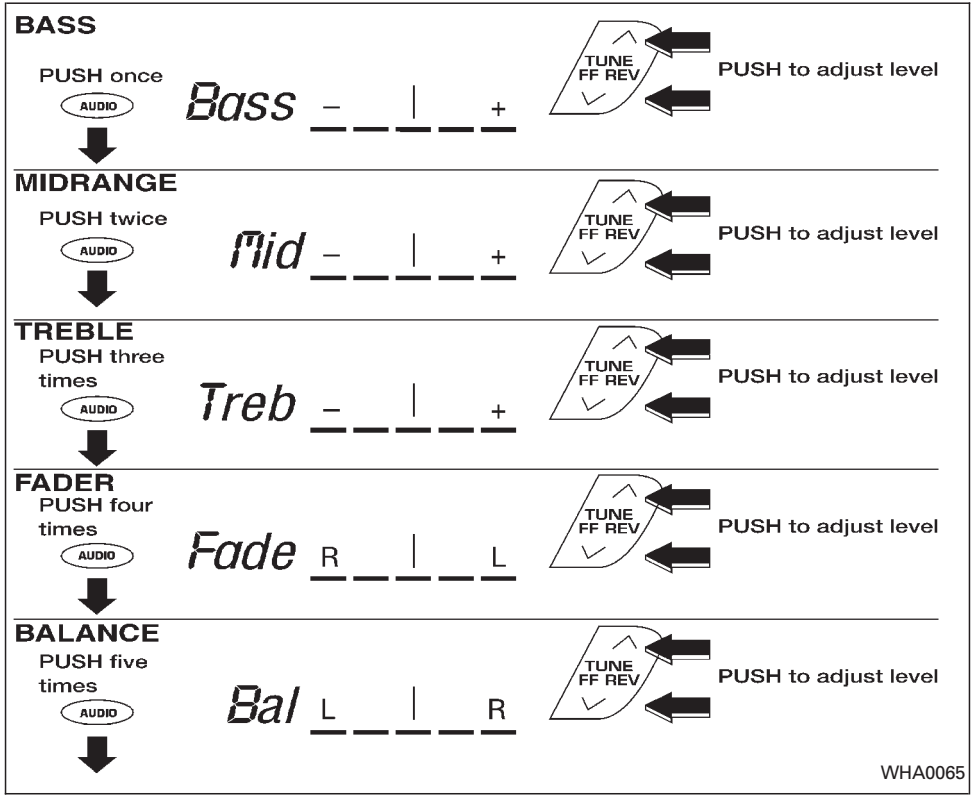

Adjusting tone quality and speaker balance

Press the AUDIO button to enter the audio adjust mode:

Bass→Mid→Treb→Fade→Bal

Press the TUNE/FF-REV (⌃ or ⌄) or SEEK/TRACK (⊼ or ⊻) to adjust to the desired levels. The display will return to the regular radio display after 7 seconds, or you may press the AUDIO button again to return to the regular radio display.

Clock operation

Pressing the CLOCK button displays the clock with the radio on or off. Press the CLOCK button again to turn off the clock display.

Clock set

1. Press and hold the CLOCK button until it beeps (>2 seconds).
2. The hours will start flashing. Press TUNE/FF-REV (⌃ or ⌄) or SEEK/TRACK (⊼ or ⊻) to adjust the hours.
3. Press the CLOCK button to switch to the minute adjustment.

4. Press TUNE/FF-REV (⋀ or ⋁) or SEEK/TRACK (⊼ or ⊻) to adjust the minutes.
5. Press the CLOCK button again to exit the clock set mode.

The display will return to the regular clock display after 7 seconds, or you may press the CLOCK button again to return to the regular clock display.

FM-AM radio operation

FM-AM band select

Push the AM or the FM button to change from AM to FM reception.

The FM stereo indicator, ST, illuminates during FM stereo reception. When the stereo broadcast signal is weak, the radio automatically changes from stereo to monaural reception.

Station signal strength, distance from radio transmitter, buildings, bridges, mountains, and other external influences affect radio reception. Intermittent changes in reception quality normally are caused by these external influences.

Using a cellular phone in or near the vehicle may influence radio reception quality.

TUNE/FF-REV

⚠ WARNING

The radio should not be tuned while driving so full attention may be given to vehicle operation.

Use the ⋀ or ⋁ buttons for manual tuning. To move quickly through the channels, hold the tuning buttons down.

SEEK tuning

Push SEEK/TRACK (⊼ or ⊻). SEEK tuning begins from low to high frequencies or high to low frequencies, depending on which button is pressed, and stops at the next broadcasting station. If using the up button, once the highest broadcasting station is reached, the radio continues in the SEEK mode at the lowest broadcasting station. If using the down button, once the lowest broadcasting station is reached, the radio continues in the SEEK mode at the highest broadcasting station.

SCAN tuning

Push the SCAN button. SCAN illuminates in the display window. Scan tuning begins from low to high frequencies or from high to low frequencies. Scan tuning stops at each broadcasting station that has sufficient signal strength for 5 seconds. When scanning, SCAN blinks in the display. Pushing the SCAN button again during this 5 second period stops Scan tuning and the radio remains tuned to that station.

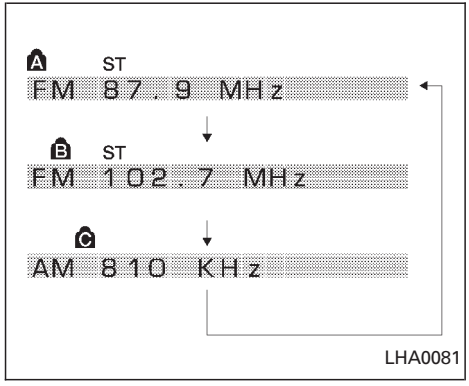

Station memory operation − Travel Preset is OFF

Each preset mode (A, B or C) has 6 presets, capable of storing any combination of AM, FM and FM RDS stations.

Press the PRESET ABC button to change between the presets:

A→B→C

The radio displays icon A, B or C to indicate which set of presets is active.

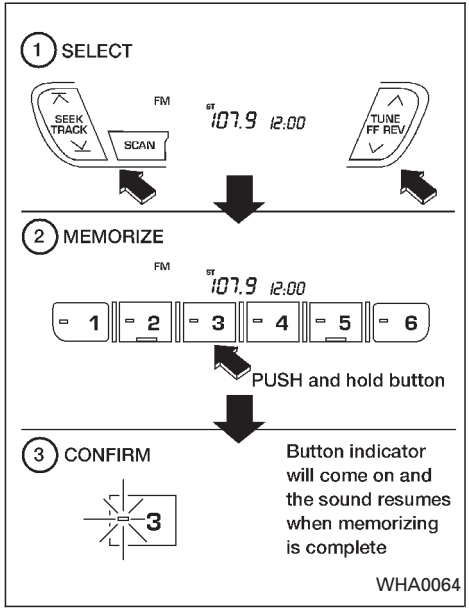

To store a radio station in a preset:

1. Tune to the desired station.
2. Press the desired station select button (>2 seconds.) For example, in the illustrations ch3 is to be memorized.
3. When the indicator illuminates in the station selection button, a beep will sound indicating memorization is complete. For FM stations, the indicator will turn green. For AM stations, the indicator will turn amber.
4. Other station select buttons can be set in the same manner.

If the battery cable is disconnected, or if the radio fuse opens, the radio memory is cancelled. In that case, reset the desired stations.

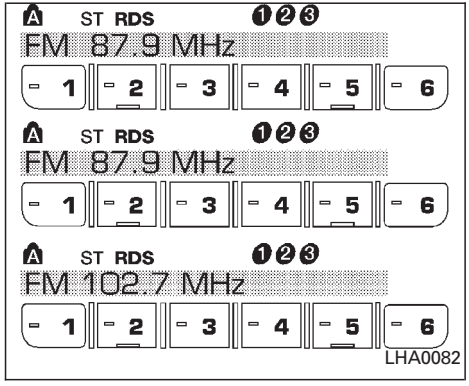

Turning ON Travel Preset

1. Press the TRAVEL PRESET button (<1.5 seconds). The green TRAVEL PRESET button indicator turns on.
2. The radio selects the strongest stations in the area and stores them in Travel Presets A, B and C. 12 FM stations and 6 AM stations are the default settings. To change the default settings, see “Editing Travel Preset” later in this section.
3. When finished storing radio stations, the radio tunes to the first stored preset of Travel Preset A.
4. If the radio cannot find any stations, the radio displays **“NO STATION”** and mutes the audio.
5. If the radio cannot fill all the presets, the remaining presets are stored with 87.9 for FM, and 600 for AM.

The TUNE, SCAN, SEEK and preset memory functions are available while Travel Preset mode is on.

Canceling Travel Preset

Press the TRAVEL PRESET button (<1.5 seconds) to clear the Travel Preset memory. This turns off the green indicator. The radio returns to the last used preset of A, B or C in the permanent preset memory.

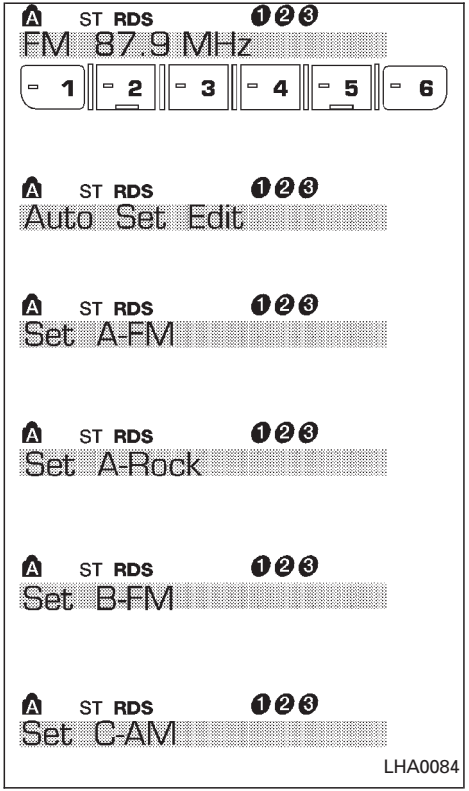

Editing Travel Preset

1. Press and hold the TRAVEL PRESET button (>3 seconds) until the radio beeps to start the editing mode. The green Travel Preset indicator will flash while in TRAVEL PRESET EDIT mode.
2. The radio displays **“TRAVEL EDIT”** for 2 seconds and then changes to **“SET A-*”**.
3. Press TUNE/FF-REV (⋀ or ⋁) to select a mode.
4. Press the TRAVEL PRESET button to save the mode.
5. Display is changed to **“SET B-*”**, repeat steps 3 and 4.
6. Display is changed to **“SET C-*”**, repeat step 3.
7. Press the TRAVEL PRESET button to exit the edit mode and return to normal mode.

*: AM, FM, FM RDS, Rock, Classic Rock, Soft Rock, Top 40, Country, Jazz, Classical, Oldies, News, Sports, Talk.

Storing Travel Preset stations in permanent memory

1. While in Travel Preset mode, press and hold the TRAVEL PRESET button until it beeps (>3 seconds).
2. The presets are transferred from Travel Preset memory to the permanent preset memory for A, B, and C. **“PRESETS LOADED”** is displayed.
3. The TRAVEL PRESET indicator turns off.

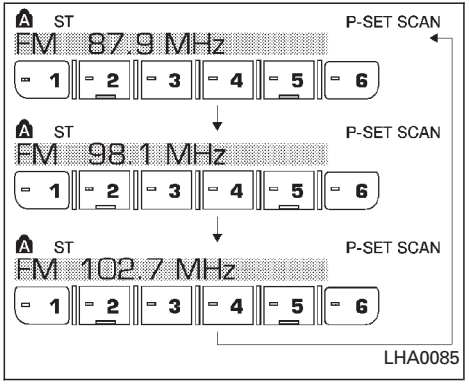

Preset Scan

Pressing the Preset Scan button (<1.5 seconds) scans the permanent preset memory that is selected (A, B or C) from 1-6 for 5 seconds. If the Travel Preset is ON, the travel preset that is selected (A, B, or C) from 1-6 is scanned for 5 seconds.

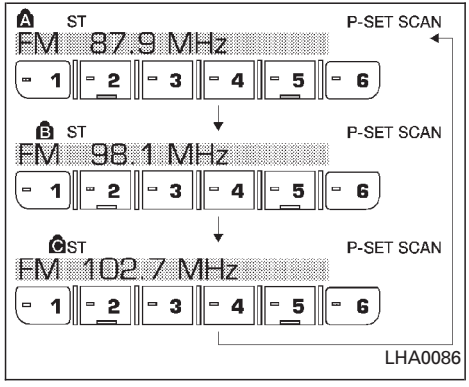

All Preset Scan

Pressing the Preset Scan button (>1.5 seconds) scans all the permanent preset memory banks (A, B or C) from 1-6 for 5 seconds. If the Travel Preset is ON, all the travel preset memory banks (A, B, or C) from 1-6 are scanned for 5 seconds.

Canceling preset scan mode

Pressing any button except CLOCK, EJECT and PTY cancels the Preset Scan mode.

RDS (Radio Data System)

RDS stands for Radio Data System, and is a data information service transmitted by some radio stations on the FM band (not AM band) encoded within a regular radio broadcast. Currently, most RDS stations are in large cities, but many stations are now considering broadcasting RDS data.

RDS can display:

- Station call sign, such as “WHFR 98.3”.
- Station name, such as “The Groove”.
- Music or programming type such as “Classical”, “Country”, or “Rock”.
- Traffic reports about delays or construction.

If the station broadcasts RDS information, the RDS icon is displayed. The RDS information will be displayed according to the option chosen in the RDS setup mode. (FM & RDS is the default.) Press the RDS button again to display the frequency for 3 seconds. The radio will then return to the normal display. If the station does not broadcast RDS information, the RDS icon will not be displayed.

Setting RDS Mode

Press the RDS button (>3 seconds) until the display shows **“RDS SET MODE”**. This display will last 2 seconds and then change to **“TRAFFIC-OFF”**. Press TUNE/FF-REV (∧ or ∨) to toggle the RDS traffic mode from “OFF” to “ON”. Press the RDS button again to set your traffic mode selection.

The display changes to **“SHOW”** for the second part of the RDS mode selection. Press TUNE/FF-REV (∧ or ∨) to switch between the following RDS display modes:

- “FM & RDS”: the radio display will show the station’s broadcast frequency and the station’s name.
- “RDS ONLY”: the radio display will show the station’s name only.
- “RDS TEMP”: the radio display will show the station’s name for 5 seconds and then display only the radio station’s broadcast frequency.

PTY (Program Type)

PTY can be used to search for a certain program type. Certain areas have a limited number of stations that transmit RDS. Many stations transmit call letters and frequencies

only. Searching or scanning by program type may yield a limited number of selections.

1. Press the PTY button. The display changes from **“RDS PTY SEARCH”** to **“SELECT BY TUNE”**.
2. Press TUNE/FF-REV (⋀ or ⋁) up/down button to choose a specific program type:

   ROCK, CLASSIC ROCK, SOFT ROCK, TOP 40, COUNTRY, JAZZ, CLASSICAL, OLDIES, NEWS, SPORTS, TALK, ANY
3. Press the SEEK or SCAN button to search for the next station with the selected PTY. The SCAN icon flashes when the SCAN button is pressed. The radio continues to seek or scan until a radio station is found matching the selected PTY.
4. Press the PTY button again to cancel the PTY SEEK mode.

Compact disc (CD) operation

Turn the ignition key to the ACC or ON position.

⚠ CAUTION

- **Do not force a compact disc (CD) into the CD insert slot. This could damage the CD and/or CD changer.**
- **Trying to load a CD with the CD door closed could damage the CD and/or CD changer.**

CD button

When the CD button is pressed with a compact disc loaded and the radio playing, the radio turns off and the last used compact disc starts to play.

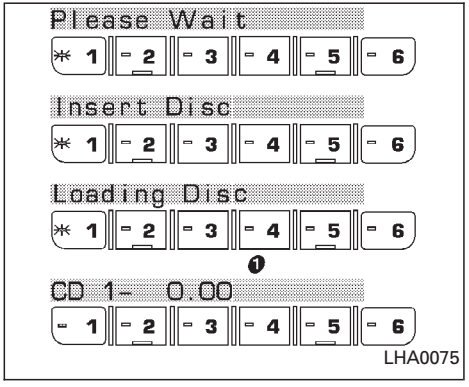

LOAD CD Loading

Press the LOAD button to start CD loading mode.

The following sequence will occur:

1. The **green** indicator on the lowest available disc select button will start blinking. (Same as preset memory button). The display shows **“Please Wait”**.
2. The display changes to **“Insert Disc”** for a maximum of 15 seconds.

3. During the 15 second interval, insert the disc. The display changes to **“Loading Disc”**.
4. The CD will play after the disc is set to a play position.
5. The indicator changes from **blinking green** to **solid green** and the display changes to show the Disc number icon, Disc number, Track number and Elapsed time.

All disc loading

1. Press and hold the LOAD button until the radio beeps (>1.5 seconds).
2. The **green** indicator on the lowest available disc select button will start blinking. (Same as preset memory button). The display shows **“Please Wait”**.
3. The display changes to **“Insert Disc”** for a maximum of 15 seconds.
4. During the 15 second interval, insert the disc. The display changes to **“Loading Disc”**.
5. The indicator changes from **blinking green** to **solid green**.
6. The disc number icon is turned on.
7. Steps 2-5 are repeated until all discs are loaded, then the last loaded disc will begin to play. The display shows the Disc number, Track number and Elapsed Time.

Selected disc loading

1. Press a disc select button whose indicator is off. The display shows **“Please Wait”**.
2. The **green** indicator starts blinking and the display shows **“Insert Disc”** for 15 seconds.
3. Insert the CD. The display shows **“Loading Disc”**.
4. The CD will play after the disc is set to a play position.
5. The indicator color changes from **blinking green** to **solid green** and the display shows the Disc icon, Disc number, Track number and Elapsed Time.

If a disc is not inserted within 15 seconds or if the load button is pressed during load sequence, the entire disc load sequence will be canceled.

Disc Play

Press the CD button. If a CD is loaded and the radio is playing, the radio turns off and the last loaded disc starts to play.

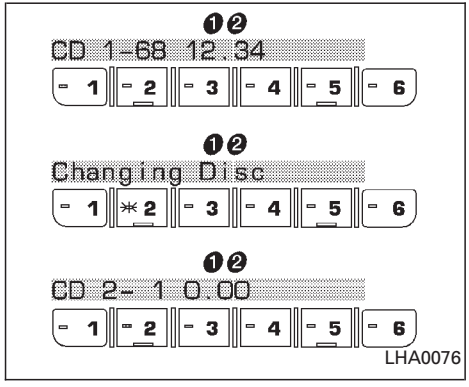

Selected disc play

1. Press the disc select button whose disc icon is displayed.
2. The indicator blinks **green** during the change and the display shows **"Changing Disc"**.
3. The CD plays after the disc is set to a play position.
4. The indicator changes from **blinking green** to **solid green** and the display shows the Disc number, Track number and Elapsed Time.

FF (fast forward) REW (rewind) buttons

When the TUNE/FF-REV (⋀ or ⋁) button is pressed while the compact disc is playing, the compact disc plays at an increased speed while fast forwarding or rewinding. When the button is released, the CD returns to normal play speed.

SEEK/TRACK buttons

When ⊼ is pressed while the compact disc is playing, the selection following the present one starts to play from the beginning. Press ⊼ several times to skip several selections. Each time the button is pressed, the CD advances one additional selection. The track number appears in the display window. (When the last selection on the compact disc is skipped, the first selection is played.)

When ⊻ is pressed, the selection being played returns to the beginning. Press ⊻ several times to skip back several selections. Each time the button is pressed, the CD moves back one selection. If the play pattern is in MIX mode when the button is pressed, the next random selection will be played.

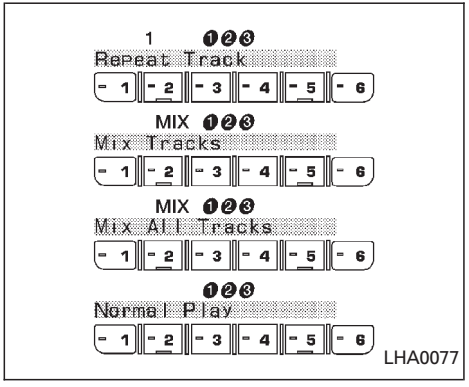

Repeat/Mix

Press the RPT MIX button to change CD play patterns:

Repeat→Mix→All Mix→Normal Play

Repeat

Press the RPT MIX button (<1.5 seconds) once to repeat the current track. The "1" icon is turned on, and the display shows **"Repeat Track"** for 2 seconds. The display then shows the Track number and Elapsed time as normal.

Mix

Press the RPT MIX button (<1.5 seconds) again to start shuffle play of the current disc. The “MIX” icon is turned on and the display shows **“Mix Tracks”** for 2 seconds. The display then shows the Track number and Elapsed time as normal.

All Mix

Press the RPT MIX button (<1.5 seconds) again to start shuffle play of all discs. The “MIX” icon is turned on, and the display shows **“Mix All Tracks”** for 2 seconds. The display then shows the Track number and Elapsed time as normal. Also, the indicators of the loaded discs are turned on with amber color. (Green for current disc.)

Normal Play

Press the RPT MIX button (<1.5 seconds) again to change to normal play mode. The “MIX” icon and the amber LED’s are turned off. The display shows **“Normal Play”** for 2 seconds. The display then shows the Track number and Elapsed time as normal.

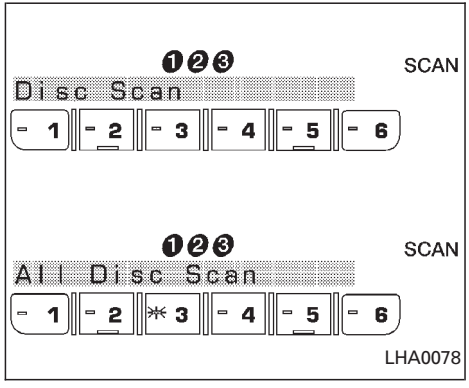

CD Scan

1 Disc All Tracks

Press the SCAN button (<1.5 seconds) to scan all tracks of the current disc for 7 seconds per track. The display shows **“Disc Scan”** for 2 seconds, and then shows the track number and elapsed time as normal. The SCAN icon is flashed during Scan mode.

The Scan mode is cancelled once it scans through all tracks on the disc, or if the SCAN button is pressed during Scan mode.

All Discs, 1 Track

Press and hold the SCAN button (>1.5 seconds) to scan the first track of all the loaded discs for 7 seconds per track. The display shows **“All Disc Scan”** for 2 seconds, and then shows the track number and elapsed time as normal. The SCAN icon is flashed during Scan mode.

The Scan mode is cancelled once it scans through all the loaded discs, or if the SCAN button is pressed during Scan mode.

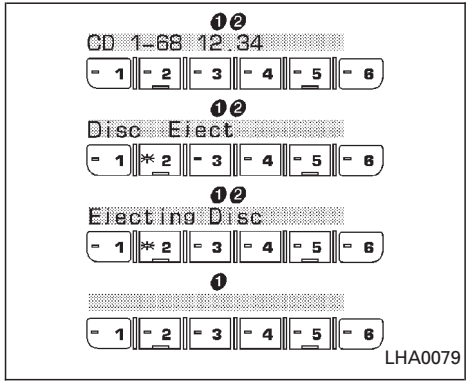

Eject CD

Current disc

1. Press the EJECT button.
2. The **green** indicator starts to blink and the display shows **“Disc Eject”** for 2 seconds. The display then changes to **“Ejecting Disc”**.
3. The disc ejects. Remove the disc. (If disc is not removed within 15 seconds, the disc will reload.)
4. The indicator and symbol for the disc are turned off.

Select a disc

1. Press the desired disc, then press the EJECT button.
2. The **green** indicator starts blinking and the display shows **“Disc Eject”** for 2 seconds. The display then changes to **“Ejecting Disc”**.
3. The disc ejects. Remove the disc. (If disc is not removed within 15 seconds, disc will reload.)
4. The indicator and symbol for the disc are turned off.

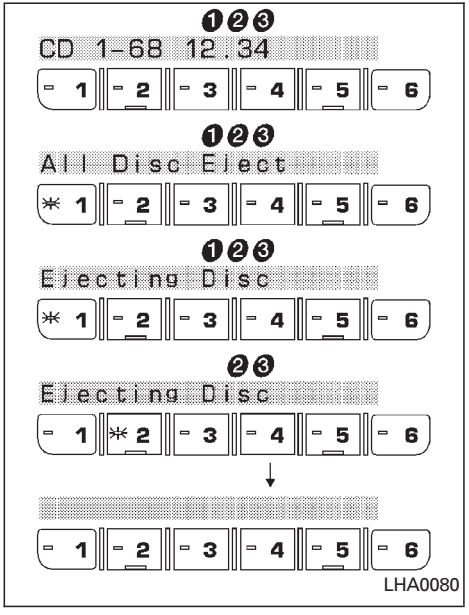

All discs

1. Press and hold the EJECT button until it beeps (>1.5 seconds).
2. Lowest used disc number indicator blinks **green** and display shows **“All Disc**

Eject" for 2 seconds. The display then changes to **"Ejecting Disc"**.

3. When a disc is removed, the indicator and disc icon will be turned off, and then the next disc will emerge, and so on.
4. The display will be turned off after all discs are ejected and removed.

If a disc is not removed within 15 seconds, or if the EJECT button is pressed again during the Eject sequence, the entire disc Eject sequence will be canceled.

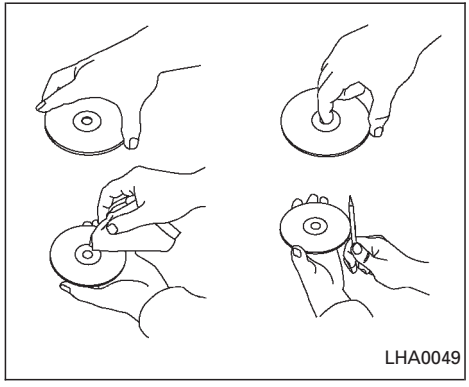

CD care and cleaning:

- Handle a CD by its edges. Never touch the surface of the disc.
- To clean a disc, wipe the surface from the center to the outer edge using a clean, soft cloth. Do not wipe the disc using a circular motion.

  Do not use a conventional record cleaner or alcohol intended for industrial use.
- A new disc may be rough on the inner and outer edges. Remove the rough edges by rubbing the inner and outer edges with the side of a pen or pencil as illustrated.

⚠ CAUTION

- **During cold weather or rainy days, the player may malfunction due to the humidity. If this occurs, remove the CD and dehumidify or ventilate the player completely.**
- **The player may skip while driving on rough roads.**
- **The CD player sometimes cannot function when the passenger compartment temperature is extremely high. Decrease the temperature before use.**
- **Do not expose the CD to direct sunlight.**
- **Do not touch the playing surface of the disc.**
- **Do not use 8 cm discs. They may cause player damage even if using with the optional adapter.**
- **Recordable compact discs (CD-R) may not function properly in the CD player.**

ANTENNA

Window antenna

The antenna pattern is printed inside the rear window.

⚠ CAUTION

- **Do not place metalized film near the rear window glass or attach any metal parts to it. This may cause poor reception or noise.**
- **When cleaning the inside of the rear window, be careful not to scratch or damage the rear window antenna. Lightly wipe along the antenna with a dampened soft cloth.**

When installing a CB, ham radio or car phone in your NISSAN, be sure to observe the following cautions, otherwise the new equipment may adversely affect the MFI (Multiport Fuel Injection) system and other electronic parts.

⚠ WARNING

- **A cellular telephone should not be used while driving so full attention may be given to vehicle operation. Some jurisdictions prohibit the use of cellular telephones while driving.**
- **If you must make a call while your vehicle is in motion, the hands free cellular phone operational mode (if so equipped) is highly recommended. Exercise extreme caution at all times so full attention may be given to vehicle operation.**
- **If a conversation in a moving vehicle requires you to take notes, pull off the road to a safe location and stop your vehicle before doing so.**

⚠ CAUTION

- **Keep the antenna as far as possible away from the Engine Control Module (ECM).**
- **Keep the antenna wire more than 8 in. (20 cm) away from the Multiport Fuel Injection harness. Do not route the antenna wire next to any harness.**
- **Adjust the antenna standing-wave ratio as recommended by the manufacturer.**
- **Connect the ground wire from the CB radio chassis to the body.**
- **For details, consult an authorized NISSAN dealer.**

MEMO

5 Starting and driving

Precautions when starting and driving.....5-2
Exhaust gas (carbon monoxide) 5-2
Three-way catalyst 5-2
Avoiding collision and rollover.....5-3
Drinking alcohol/drugs and driving.....5-3
Ignition switch.....5-4
Automatic transmission 5-4
Manual transmission.....5-5
Key positions 5-5
Nissan vehicle immobilizer system (NVIS).....5-6
Before starting the engine.....5-6
Starting the engine.....5-7
Driving the vehicle.....5-7
Automatic transmission 5-7
Manual transmission.....5-11
Parking brake 5-12
Cruise control (if so equipped).....5-13
Precautions on cruise control.....5-13
Cruise control operations 5-14
Break-in schedule 5-15
Increasing fuel economy 5-15
Parking/parking on hills.....5-16
Power steering 5-17
Brake system.....5-17
Braking precautions.....5-17
Anti-lock brake system (ABS) (if so equipped).....5-18
Cold weather driving 5-19
Freeing a frozen door lock 5-19
Anti-freeze 5-19
Battery 5-19
Draining of coolant water 5-19
Tire equipment.....5-20
Special winter equipment 5-20
Driving on snow or ice.....5-20
Engine block heater (if so equipped) 5-21

WARNING

- **Do not leave children, impaired adults, or pets alone in your vehicle. They could accidentally injure themselves or others through inadvertent operation of the vehicle. Also, on hot, sunny days, temperatures in a closed vehicle could quickly become high enough to cause severe or possibly fatal injuries to people or animals.**
- **Closely supervise children when they are around cars to prevent them from playing and becoming locked in the trunk where they could be seriously injured. Keep the car locked, with the trunk closed, when not in use, and prevent children's access to car keys.**

EXHAUST GAS (Carbon Monoxide)

WARNING

Do not breathe exhaust gases; they contain colorless and odorless carbon monoxide. Carbon monoxide is dangerous. It can cause unconsciousness or death.

- **If you suspect that exhaust fumes are entering the vehicle, drive with all windows fully open, and have the vehicle inspected immediately.**
- **Do not run the engine in closed spaces such as a garage.**
- **Do not park the vehicle with the engine running for any extended length of time.**
- **Keep the trunk lid closed while driving, otherwise exhaust gases could be drawn into the passenger compartment. If you must drive with the trunk lid open, follow these precautions:**
  1. **Open all the windows.**
  2. **Set the air recirculation button (if so equipped) to the off position and turn the fan control dial to 4 (high) to circulate the air.**
- **If electrical wiring or other cable connections must pass to a trailer through the seal on the trunk lid or the body, follow the manufacturer's recommendation to prevent carbon monoxide entry into the vehicle.**
- **The exhaust system and body should be inspected by a qualified mechanic whenever:**
  a. **The vehicle is raised for service.**
  b. **You suspect that exhaust fumes are entering into the passenger compartment.**
  c. **You notice a change in the sound of the exhaust system.**
  d. **You have had an accident involving damage to the exhaust system, underbody, or rear of the vehicle.**

THREE-WAY CATALYST

The three-way catalyst is an emission control device installed in the exhaust system. Exhaust gases in the three-way catalyst are burned at high temperatures to help reduce pollutants.

⚠ WARNING

- **The exhaust gas and the exhaust-system are very hot. Keep people, animals or flammable materials away from the exhaust system components.**
- **Do not stop or park the vehicle over flammable materials such as dry grass, waste paper or rags. They may ignite and cause a fire.**

⚠ CAUTION

- **Do not use leaded gasoline. Deposits from leaded gasoline seriously reduce the three way catalyst's ability to help reduce exhaust pollutants.**
- **Keep your engine tuned up. Malfunctions in the ignition, fuel injection, or electrical systems can cause over-rich fuel flow into the three-way catalyst, causing it to overheat. Do not keep driving if the engine misfires, or if noticeable loss of performance or other unusual operating conditions are detected. Have the vehicle inspected promptly by an authorized NISSAN dealer.**
- **Avoid driving with an extremely low fuel level. Running out of fuel could-cause the engine to misfire, damaging the three way catalyst.**
- **Do not race the engine while warming it up.**
- **Do not push or tow your vehicle to start the engine.**

AVOIDING COLLISION AND ROLLOVER

⚠ WARNING

Failure to operate this vehicle in a safe and prudent manner may result in loss of control or an accident.

Be alert and drive defensively at all times. Obey all traffic regulations. Avoid excessive speed, high speed cornering, or sudden steering maneuvers, because these driving practices could cause you to lose control of your vehicle. **As with any vehicle, loss of control could result in a collision with other vehicles or objects, or cause the vehicle to roll over, particularly if the loss of control causes the vehicle to slide sideways.** Be attentive at all times, and avoid driving when tired. Never drive when under the influence of alcohol or drugs (including prescription or over-the-counter drugs which may cause drowsiness). Always wear your seat belt as outlined in the ''Seats, restraints and supplemental air bag systems'' section of this manual, and also instruct your passengers to do so.

DRINKING ALCOHOL/DRUGS AND DRIVING

⚠ WARNING

Never drive under the influence of alcohol or drugs. Alcohol in the bloodstream reduces coordination, delays reaction time and impairs judgement. Driving after drinking alcohol increases the likelihood of being involved in an accident injuring yourself and others. Additionally, if you are injured in an accident, alcohol can increase the severity of the injury.

NISSAN is committed to safe driving. However, you must choose not to drive under the influence of alcohol. Every year thousands of people are injured or killed in alcohol related accidents. Although the local

laws vary on what is considered to be legally intoxicated, the fact is that alcohol affects all people differently and most people underestimate the effects of alcohol.

Remember, drinking and driving don't mix!

And that's true for drugs, too (over the counter, prescription, and illegal drugs). Don't drive if your ability to operate your vehicle is impaired by alcohol, drugs, or some other physical condition.

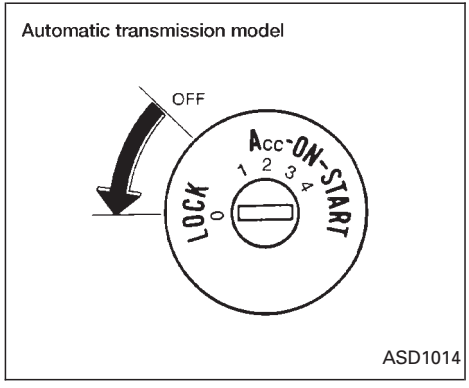

AUTOMATIC TRANSMISSION

On automatic transmission models the ignition lock is designed so the key cannot be turned to LOCK and removed until the shift selector lever is moved to the P (Park) position.

When removing the key from the ignition, make sure the shift selector lever is in the P (Park) position.

If the key cannot be turned to the LOCK position, proceed as follows to remove the key.

1) Move the shift selector lever into the P (Park) position.
2) Turn the ignition key slightly toward the ON position.
3) Turn the key to the LOCK position.
4) Remove the key.

The shift lever is designed so it cannot be moved out of P (Park) and into any of the other gear positions if the ignition key is turned to OFF or if the key is removed from the switch.

The shift selector lever can be moved if the ignition switch is in the ACC position. This allows the vehicle to be moved if the battery is discharged. The shift selector lever can also be moved if the ignition switch is in the ON position and the foot brake pedal is depressed.

There is an OFF position between the LOCK and ACC positions. The OFF position is indicated by a "1" on the key cylinder. When the ignition is in OFF, the steering wheel is not locked.

In order for the steering wheel to be locked, it must be turned about 1/8 of a turn clockwise from the straight up position.

To lock the steering wheel, turn the key to the LOCK position. Remove the key. To unlock the steering wheel, insert the key and turn it gently while rotating the steering wheel slightly right and left.

⚠ WARNING

Never remove or turn the key to the LOCK position while driving. The steering wheel will lock. This may cause the driver to lose control of the vehicle and could result in serious vehicle damage or personal injury.

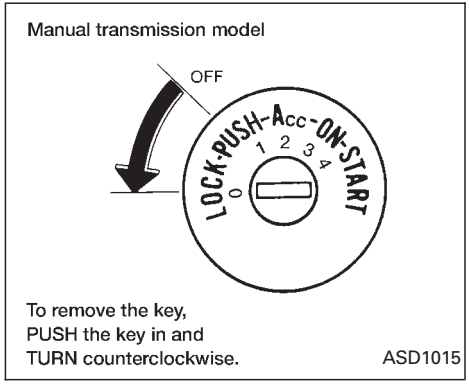

MANUAL TRANSMISSION

The ignition switch includes an anti-theft steering lock device.

The key can only be removed when the ignition switch is in the LOCK position.

On manual transmission models, to turn the ignition key to LOCK from ACC or ON, turn the key to OFF, push the key in, then turn the key to LOCK.

In order for the steering wheel to be locked, it must be turned about 1/8 of a turn clockwise from the straight up position.

To lock the steering wheel, turn the key to the LOCK position. Remove the key. To unlock the steering wheel, insert the key and turn it gently while rotating the steering wheel slightly right and left.

⚠ WARNING

Never remove or turn the key to the LOCK position while driving. The steering wheel will lock. This may cause the driver to lose control of the vehicle and could result in serious vehicle damage or personal injury.

KEY POSITIONS

LOCK Normal parking position (0)

OFF (1)

The engine can be turned off without locking the steering wheel.

ACC (Accessories) (2)

This position activates electrical accessories such as the radio when the engine is not running.

ON Normal operating position (3)

This position turns on the ignition system and the electrical accessories.

START (4)

This position activates the starter motor, which starts the engine.

NISSAN VEHICLE IMMOBILIZER SYSTEM (NVIS)

The Nissan Vehicle Immobilizer System (NVIS) will not allow the engine to run without the use of the registered NVIS key.

If the engine fails to run using the registered NVIS key, it may be due to interference caused by another NVIS key, an automated toll road device or automated payment device on the key ring. Restart the engine using the following procedures:

1. Leave the ignition switch in the ON position for approximately 5 seconds.
2. Turn the ignition switch to the OFF or LOCK position and wait approximately 5 seconds.
3. Repeat step 1 and 2 again.
4. Restart the engine while holding the device (which may have caused the interference) separate from the registered NVIS key.

If this procedure allows the engine to run, NISSAN recommends placing the registered NVIS key on a separate key ring to avoid interference from other devices.

BEFORE STARTING THE ENGINE

- Make sure the area around the vehicle is clear.
- Maintenance items listed here should be checked periodically, for example, each time you check engine oil.
- Check that all windows and lights are clean.
- Visually inspect tires for their appearance and condition. Also check tires for proper inflation.
- Lock all doors.
- Position seat and adjust head restraints.
- Adjust inside and outside mirrors.
- Fasten seat belts and ask all passengers to do likewise.
- Check the operation of warning lights when key is turned to the ON (3) position. See ‘‘Warning/Indicator lights and chimes’’ in the ‘‘Instruments and controls’’ section.

1. Apply the parking brake.
2. **Automatic transmission:**

   Move the shift selector lever to P (Park) or N (Neutral). (P is recommended.)

   The shift selector lever cannot be moved out of P (Park) and into any of the other gear positions if the ignition key is turned to OFF or if the key is removed.

   The starter is designed not to operate if the shift selector lever is in any of the driving positions.

   Manual transmission:

   Move the shift lever to N (Neutral), and depress the clutch pedal to the floor while cranking the engine.

   The starter is designed not to operate unless the clutch pedal is fully depressed.
3. Crank the engine **with your foot off the accelerator pedal** by turning the ignition key to START. Release the key when the engine starts. If the engine starts, but fails to run, repeat the above procedure.

   — If the engine is very hard to start in extremely cold or hot weather, depress and hold the accelerator pedal to help start the engine.

   — In the summer, when restarting the engine within 30 minutes after it has been stopped, keep the accelerator pedal fully depressed while starting.

⚠ CAUTION

Do not operate the starter for more than 15 seconds at a time. If the engine does not start, turn the key off and wait 10 seconds before cranking again, otherwise the starter could be damaged.

4. **Warm-up**

   Allow the engine to idle for at least 30 seconds after starting. Drive at moderate speed for a short distance first, especially in cold weather.

AUTOMATIC TRANSMISSION

⚠ WARNING

- **Do not depress the accelerator pedal while shifting from P (Park) or N (Neutral) to R (Reverse), D (Drive), 2 or 1. Always depress the brake pedal until shifting is completed. Failure to do so could cause you to lose control and have an accident.**
- **Cold engine idle speed is high, so use caution when shifting into a forward or reverse gear before the engine has warmed up.**
- **Never shift to P (Park) or R (Reverse) while the vehicle is moving. This could cause an accident.**

⚠ CAUTION

- **When stopping the vehicle on an uphill grade, do not hold the vehicle by depressing the accelerator pedal. The foot brake should be used for this purpose.**
- **Do not downshift abruptly on slippery roads. This may cause a loss of control.**

The automatic transmission in your vehicle is electronically controlled by the transmission control module to produce maximum power and smooth operation.

The recommended operating procedures for this transmission are shown on the following pages. Follow these procedures for maximum vehicle performance and driving enjoyment.

Starting the vehicle

- After starting the engine, fully depress the foot brake pedal before shifting the shift selector lever to the D (Drive), R (Reverse), 2 or 1 position. Be sure the vehicle is fully stopped before attempting to shift the shift selector lever.
- Keep the foot brake pedal depressed and shift into a driving gear.
- Release the foot brake, then gradually start the vehicle in motion.

The automatic transmission is designed so the foot brake pedal MUST be depressed before shifting from P (Park) to any drive position while the ignition switch is ON.

The selector lever cannot be moved out of P (Park) and into any of the other gear positions if the ignition key is turned to LOCK or if the key is removed.

The shift selector lever can be moved if the ignition switch is in the ACC position. This allows the vehicle to be moved if the battery is discharged.

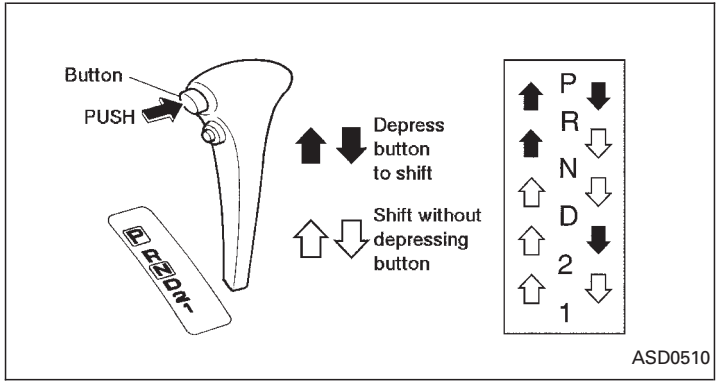

Shifting

Push the button to shift into P (Park), R (Reverse) or from D (Drive) to 2. All other positions can be selected without pushing the button.

P (Park):

Use this position when the vehicle is parked or when starting the engine. Always be sure the vehicle is at a complete stop. For maximum safety, depress the brake pedal, then push in the selector lever button and move the shift selector lever to the P (Park) position. Apply the parking brake. When parking on a hill, apply the parking brake first, then move the shift selector lever into the P (Park) position.

Shifting from P (Park)

If the ignition switch is in the ON position and the foot brake pedal is depressed, but the shift selector lever still cannot be moved out of P (Park), follow these instructions.

1. Turn the ignition key to the lock position and remove the key.
2. Apply the parking brake.
3. Insert the key and turn it to the ACC position.
4. Depress the foot brake pedal, and move the selector lever to N (Neutral).
5. Start the engine.

These instructions for starting the vehicle in N (Neutral) should only be used until service can be obtained at an authorized NISSAN dealership.

R (Reverse)

Use this position to back up. Always be sure the vehicle is at a complete stop before moving the shift selector lever to the R (Reverse) position. Check to ensure the area behind the vehicle is clear. With the brake pedal depressed, push in the selector lever button and move the shift selector lever to the R (Reverse) position.

N (Neutral)

Neither forward nor reverse gear is engaged. The engine can be started in this position. You may shift to N (Neutral) and restart a stalled engine while the vehicle is moving.

D (Drive)

Use this position for all normal forward driving.

2 (Second gear)

Use this position for hill climbing or engine braking on downhill grades.

Do not shift into the 2 position at speeds above 74 MPH (118 Km/h). Do not exceed 74 MPH (118 Km/h) in the 2 position.

1 (Low gear)

Use this position when climbing steep hills slowly or slow driving through deep snow, sand or mud, or for maximum engine braking on steep downhill grades.

Do not shift into the 1 position at speeds above 41 MPH (66 km/h). Do not exceed 41 MPH (66 km/h) in the 1 position.

Accelerator downshift— in D position—

For rapid passing or hill climbing while driving, fully depress the accelerator pedal to the floor. This shifts the transmission down into second gear or first gear, depending on vehicle speed.

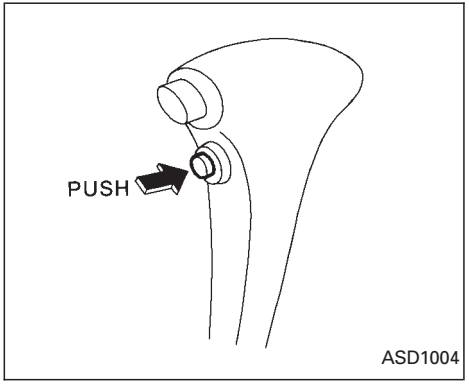

Overdrive switch

ON: With the engine running and the selector lever in the D (Drive) position, the transmission upshifts into OVERDRIVE as vehicle speed increases.

OVERDRIVE does not engage until the engine has reached operating temperature.

OFF: For driving up and down long slopes where engine braking is necessary, push the OVERDRIVE switch once. The O/D OFF indicator light on the instrument panel comes on at this time.

When cruising at a low speed or climbing a gentle slope, you may feel uncomfortable shift shocks as the transmission shifts between 3rd gear and overdrive repeatedly. In this case, depress the OVERDRIVE switch to turn the OVERDRIVE off. The O/D off indicator light on the instrument panel comes on at this time.

When driving conditions change, depress the overdrive switch on the selector/lever to turn the OVERDRIVE on.

Remember not to drive at high speeds for extended periods of time with the OVERDRIVE off. This reduces fuel economy.

MANUAL TRANSMISSION

WARNING

- **Do not downshift abruptly on slippery roads. This may cause a loss of control.**
- **Do not over-rev the engine when shifting to a lower gear. This may cause a loss of control or engine damage.**

CAUTION

- **Do not rest your foot on the clutch pedal while driving. This may cause clutch damage.**
- **Stop your vehicle completely before shifting into R (Reverse).**
- **When the vehicle is stopped with the engine running (for example at a stop light), shift to N (Neutral) and release the clutch pedal with the foot brake applied.**

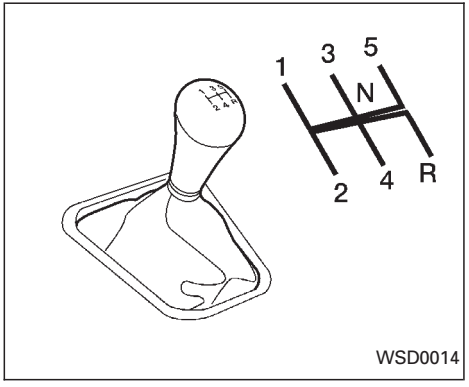

Shifting

To change gears, or when upshifting or downshifting, depress the clutch pedal fully, shift into the appropriate gear, then release the clutch slowly and smoothly.

You cannot shift directly from 5th gear into R (Reverse). First shift into N (Neutral), then into R (Reverse).

If it is difficult to move the shift lever into R (Reverse) or 1st, shift into N (Neutral), then release and depress the clutch pedal again and shift into R (Reverse) or 1st.

Suggested up-shift speeds

Shown below are suggested vehicle speeds for shifting into a higher gear. These suggestions relate to fuel economy and vehicle performance. Actual shift-up speeds will vary according to road conditions, the weather and individual driving habits.

For normal acceleration in low altitude areas (less than 4,000 ft [1,219 m]):

GEAR CHANGE	ACCEL shift point MPH (km/h)	CRUISE shift point MPH (km/h)
1st to 2nd	15 (24)	15 (24)
2nd to 3rd	25 (40)	18 (29)
3rd to 4th	36 (58)	30 (48)
4th to 5th	40 (64)	39 (63)

For quick acceleration in low altitude areas and high altitude areas (over 4,000 ft [1,219 m]):

GEAR CHANGE	MPH (km/h)
1st to 2nd	15 (24)
2nd to 3rd	25 (40)
3rd to 4th	40 (64)
4th to 5th	45 (72)

Suggested maximum speed in each gear

Downshift to a lower gear if the engine is not running smoothly, or if you need to accelerate.

Do not exceed the maximum suggested speed (shown below) in any gear. For level road driving, use the highest gear suggested for that speed. Always observe posted speed limits, and drive according to the road conditions, which will ensure safe operation. Do not over-rev the engine when shifting to a lower gear as it may cause engine damage or loss of vehicle control.

GEAR	MPH (km/h)
1st	30 (48)
2nd	60 (96)
3rd	90 (144)
4th	–
5th	–

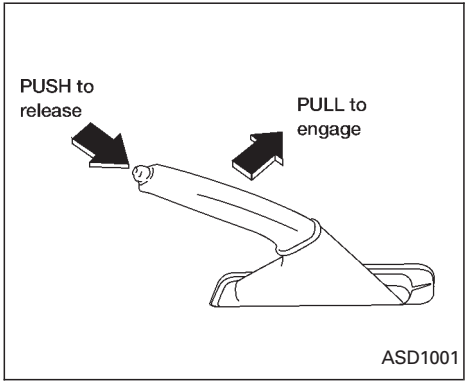

To engage: pull the lever up.

To release:

1. Firmly apply foot brake.
2. **Manual transmission models:**

   Place the shift selector lever in the N (neutral) position.

   Automatic transmission models:

   Move the shift selector lever to the P (park) position.
3. While pulling up on the parking brake lever slightly, push the button and lower completely.

4. Before driving, be sure the brake warning light goes out.

WARNING

- **Be sure the parking brake is fully released before driving. Failure to do so can cause brake failure and lead to an accident.**
- **Do not release the parking brake from outside the vehicle.**
- **Do not use the gear shift in place of the parking brake. When parking, be sure the parking brake is fully engaged.**
- **Do not leave children unattended in a vehicle. They could release the parking brake and cause an accident.**

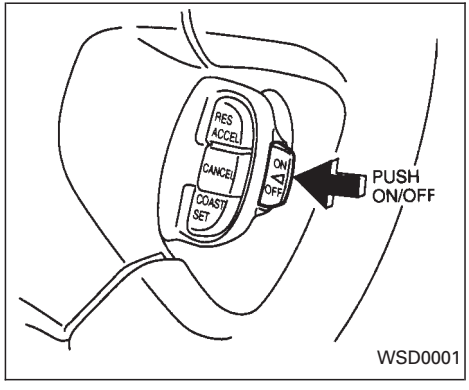

PRECAUTIONS ON CRUISE CONTROL

- If the cruise control system malfunctions, it cancels automatically. The SET indicator light in the instrument panel then blinks to warn the driver.
- If the SET indicator light blinks, turn the cruise control main switch off and have the system checked by an authorized NISSAN dealer.
- The SET indicator light may blink when the cruise control main switch is turned ON while pushing the RES/ACCEL, COAST/SET, or CANCEL switch (located on the steering wheel). To properly use the cruise control system, use the following procedures.

WARNING

Do not use the cruise control when driving under the following conditions.

- **When it is not possible to keep the vehicle at a set speed.**
- **In heavy traffic or in traffic that varies in speed.**
- **On winding or hilly roads.**
- **On slippery roads (rain, snow, ice, etc.).**
- **In very windy areas.**

Doing so could cause a loss of vehicle control and result in an accident.

CAUTION

On manual transmission models, do not shift into N (Neutral) without depressing the clutch pedal when the cruise control is set. Should this occur, depress the clutch pedal and turn the main switch off immediately. Failure to do so may cause engine damage.

CRUISE CONTROL OPERATIONS

The cruise control allows driving at a speed between 30 to 90 MPH (48 to 144 km/h) without keeping your foot on the accelerator pedal.

To turn on the cruise control, push the main switch. The CRUISE indicator light in the instrument panel comes on.

To set cruising speed, accelerate the vehicle to the desired speed, push the COAST/SET switch and release it. The SET light in the instrument cluster comes on. Take your foot off the accelerator pedal. Your vehicle maintains the set speed.

- **To pass another vehicle,** depress the accelerator pedal. When you release the pedal, the vehicle returns to the previously set speed.
- The vehicle may not maintain the set speed when going up or down steep hills. If this happens, drive without the cruise control.

To cancel the preset speed, use one of the following three methods:

a) Push the CANCEL button; the SET light in the instrument cluster goes out.

b) Tap the brake pedal; the SET light goes out.

c) Turn the main switch off. Both the CRUISE indicator on the main switch and SET light in the instrument cluster go out.

The cruise control is automatically cancelled and the SET light in the instrument panel goes out if:

- you depress the brake or clutch pedal while pushing the RES/ACCEL or COAST/SET switch.
- the vehicle slows down more than 8 MPH (13 km/h) below the set speed.
- you depress the clutch pedal (manual transmission), or move the shift selector lever to N (Neutral) (automatic transmission).

To reset at a faster cruising speed, use one of the following three methods.

a) Depress the accelerator pedal. When the vehicle attains the desired speed, push and release the COAST/SET switch.

b) Push and hold the RES/ACCEL switch. When the vehicle attains the speed you desire, release the switch.

c) Push and release the RES/ACCEL switch. Each time you do this, the set speed increases by about 1 MPH (1.6 km/h).

To reset at a slower cruising speed, use one of the following three methods:

a) Lightly tap the brake pedal. When the vehicle attains the desired speed, push the COAST/SET switch and release it.

b) Push and hold the COAST/SET switch. Release the switch when the vehicle slows to the desired speed.

c) Push and release the COAST/SET switch. Each time you do this, the set speed decreases by about 1 MPH (1.6 km/h).

To resume the preset speed, push and release the RES/ACCEL switch. The vehicle returns to the last set cruising speed when the vehicle speed is over 30 MPH (48 km/h).

BREAK-IN SCHEDULE

During the first 1,000 miles (1,600 km), follow these recommendations for the future reliability and economy of your new vehicle. Failure to follow these recommendations may result in vehicle damage or shortened engine life.

- Do not drive over the legal speed limit and do not run the engine over 4,000 rpm. Avoid driving for long periods at constant speed, either fast or slow.
- Do not accelerate at full throttle in any gear.
- Avoid quick starts.
- Avoid hard braking as much as possible.
- Do not tow a trailer for the first 500 miles (800 km).

INCREASING FUEL ECONOMY

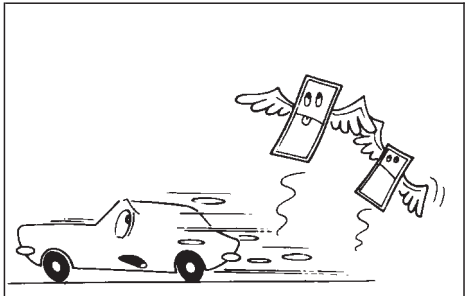

Abrupt starts and stops waste fuel and money.

SD1001M

- Accelerate slowly and smoothly. Maintain cruising speeds with a constant accelerator position.
- Drive at moderate speeds on the highway. Driving at high speed lowers fuel economy.
- Avoid unnecessary stopping and braking. Maintain a safe distance behind other vehicles.
- Use a proper gear range which suits road conditions. On level roads, shift into high gear as soon as possible.
- Avoid unnecessary engine idling.
- Keep your engine tuned up.
- Follow the recommended periodic maintenance schedule.
- Keep the tires inflated at the correct pressure. Low tire pressure increases tire wear and wastes fuel.
- Keep the front wheels in correct alignment. Improper alignment increases tire wear and lowers fuel economy.
- Air conditioner operation lowers fuel economy. Use the air conditioner only when necessary.
- When cruising at highway speeds, it is more economical to use the air conditioner and leave the windows closed to reduce drag.

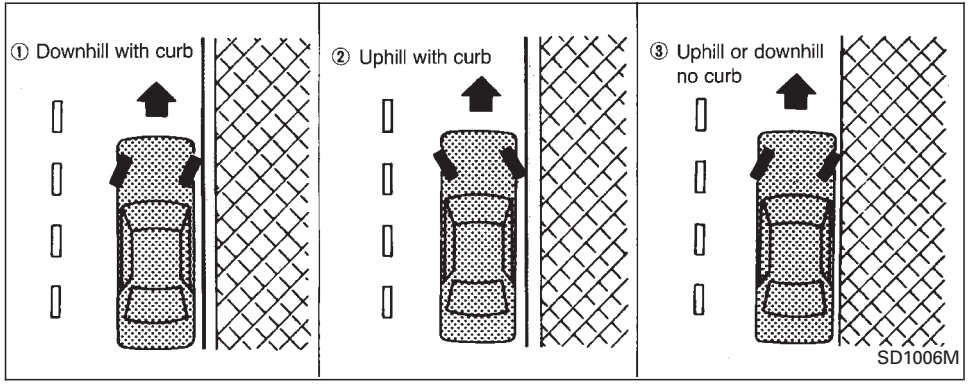

⚠ WARNING

Do not park the vehicle over flammable materials such as dry grass, waste paper or rags. They may ignite and cause a fire.

1. Firmly apply the parking brake.
2. **Manual transmission models:**

   Place the shift lever in the R (Reverse) position. When parking on an uphill grade, place the shift lever in 1 (First) gear.

   Automatic transmission models:

   Move the selector lever to the P (Park) position.

⚠ WARNING

- **Safe parking procedures require that both the parking brake be set and the transmission placed into P (Park) for automatic transmission models or in an appropriate gear for manual transmission models. Failure to do so could cause the vehicle to move unexpectedly or roll away and result in an accident. Make sure the shift lever has been pushed as far forward as it can go and cannot be moved without depressing the button at the end of the lever.**
- **Never leave the engine running while the vehicle is unattended.**
- **Do not leave children unattended inside the vehicle. They could unknowingly activate switches or controls. Unattended children could become involved in serious accidents.**

3. To help prevent the vehicle from rolling into traffic when parked on an incline, it is a good practice to turn the wheels as illustrated.

- HEADED DOWNHILL WITH CURB: ①

  Turn the wheels into the curb and move the vehicle forward until the curb side wheel gently touches the curb.

- HEADED UPHILL WITH CURB: ②

  Turn the wheels away from the curb and move the vehicle back until the curb side wheel gently touches the curb.

- HEADED UPHILL OR DOWNHILL, NO CURB: ③

  Turn the wheels toward the side of the road so the vehicle will move away from the center of the road if it moves.

4. Turn the ignition key to the LOCK position and remove the key.

POWER STEERING

The power assisted steering is designed to use a hydraulic pump, driven by the engine, to assist steering.

If the engine stops or the hydraulic pump drive belt breaks, you will still have control of the vehicle. However, much greater steering effort is needed, especially in sharp turns and at low speeds.

⚠ WARNING

If the engine is not running or is turned off while driving, the power assist for the steering will not work. Steering will be much harder to operate.

BRAKE SYSTEM

The brake system has two separate hydraulic circuits. If one circuit malfunctions, you will still have braking at two wheels.

BRAKING PRECAUTIONS

Vacuum assisted brake

The brake booster aids braking by using engine vacuum. If the engine stops, you can stop the vehicle by depressing the brake pedal. However, greater foot pressure on the brake pedal will be required to stop the vehicle and stopping distance will be longer.

Using the brakes

Avoid resting your foot on the brake pedal while driving. This overheats the brakes, increases wear on the brake linings and pads, and reduces gas mileage.

To help save the brakes and to prevent the brakes from overheating, reduce speed and downshift to a lower gear before going down a slope or long grade. Overheated brakes may reduce braking performance and could result in loss of vehicle control.

⚠ WARNING

- **While driving on a slippery surface, be careful when braking, accelerating or downshifting. Abrupt braking or accelerating could cause the wheels to skid and result in an accident.**
- **If the engine is not running or is turned off while driving, the power assist for the brakes will not work. Braking will be harder.**

Wet brakes

When the vehicle is washed or driven through water, the brakes may get wet. As a result, your braking distance will be longer and the vehicle may pull to one side during braking.

To dry brakes, drive the vehicle at a safe speed while lightly pressing the brake pedal to heat-up the brakes. Do this until the brakes return to normal. Avoid driving the vehicle at high speeds until the brakes function correctly.

ANTI-LOCK BRAKE SYSTEM (ABS) (if so equipped)

The anti-lock brake system installed in some models controls the brakes at each wheel so the wheels do not lock when braking abruptly or when braking on slippery surfaces. The system detects the rotation speed at each wheel and varies the brake fluid pressure to prevent each wheel from locking and sliding. By preventing wheel lockup, the system helps the driver maintain steering control and helps to minimize swerving and spinning on slippery surfaces.

Using the system

Depress the brake pedal and hold it down.

⚠ WARNING

Do not pump the brake pedal. Doing so may result in increased stopping distances.

Normal operation

The anti-lock brake system does not operate at speeds below 3 to 6 MPH (5 to 10 km/h). The speeds vary according to road conditions. When the anti-lock system senses that one or more wheels are close to locking up, the actuator (under the hood) rapidly applies and releases hydraulic pressure (like pumping the brakes very quickly). While the actuator is working, you may feel a pulsation in the brake pedal and hear a noise or vibration from the actuator under the hood. This is normal and indicates that the anti-lock system is working properly. However, the pulsation may indicate that road conditions are hazardous and extra care is required while driving.

Self-test feature

The anti-lock brake system is sophisticated, with electronic sensors, electric pumps, and hydraulic solenoids controlled by a computer. The computer has a built-in diagnostic feature that tests the system each time you start the engine and move the vehicle at a low speed in forward or reverse. When the self-test occurs, you may hear a ‘‘clunk’’ noise and/or feel a pulsation in the brake pedal. This is normal and is not an indication of any malfunction. If the computer senses any malfunction, it switches the anti-lock brake system OFF and turns on the ABS brake warning light in the dashboard.

The brake system then operates normally, but without anti-lock assistance.

If the light comes on during the self-test or while driving, take the vehicle to an authorized NISSAN dealer for repair.

⚠ WARNING

The anti-lock brake system is a sophisticated device, but it cannot prevent accidents resulting from careless or dangerous driving techniques. It can help maintain vehicle control during braking on slippery surfaces, but remember that the stopping distance on slippery surfaces will be longer than on normal surfaces, even with the anti-lock brake system. Stopping distances may also be longer on rough, gravel or snow covered roads, or if you are using tire chains. Always maintain a safe distance from the vehicle in front of you. Ultimately, the responsibility for safety of self and others rests in the hands of the driver.

Tire type and condition of tires may also affect braking effectiveness.

- **When replacing tires, install the specified size of tire on all four wheels.**
- **When installing a spare tire, make sure it is the proper size and type as specified on the tire placard. For tire placard location information, refer to "Tire placard" in the ''Technical and Consumer information'' section of this manual.**

Refer to ''Wheels and tires'' in the ''Do-it-yourself'' section of this manual.

FREEING A FROZEN DOOR LOCK

To prevent a door lock from freezing, apply de-icer or glycerin through the key hole. If the lock becomes frozen, heat the key before inserting it into the key hole.

ANTI-FREEZE

In the winter when it is anticipated that the temperature will drop below 32°F (0°C), check the anti-freeze (ethylene glycol base) to assure proper winter protection. For details, see ''Engine cooling system'' in the ''Do-it-yourself'' section.

BATTERY

If the battery is not fully charged during extremely cold weather conditions, the battery fluid may freeze and damage the battery. To maintain maximum efficiency, the battery should be checked regularly. For details, see ''Battery'' in the ''Do-it-yourself '' section.

DRAINING OF COOLANT WATER

If the vehicle is to be left outside without anti-freeze, drain the cooling system by opening the drain valves located under the

radiator and on the engine block. Refill before operating the vehicle. See ‘‘Changing engine coolant’’ in the ‘‘Do-it-yourself’’ section.

TIRE EQUIPMENT

1. SUMMER tires have a tread designed to provide superior performance on dry pavement. However, the performance of these tires will be substantially reduced in snowy and icy conditions. If you operate your vehicle on snowy or icy roads, NISSAN recommends the use of MUD & SNOW or ALL SEASON tires on all four wheels. Please consult an authorized NISSAN dealer for the tire type, size, speed rating and availability information.
2. For additional traction on icy roads, studded tires may be used. However, some U.S. States and Canadian Provinces prohibit their use. Check local, state and provincial laws before installing studded tires.

Skid and traction capabilities of studded snow tires, on wet or dry surfaces, may be poorer than that of non-studded snow tires.

3. Tire chains may be used. Make sure they are the proper size for the tires on your vehicle and are installed according to the chain manufacturer’s suggestions.

Use of tire chains may be prohibited according to location. Check the local laws before installing tire chains. When installing tire chains, make sure they are of proper size for the tires on your vehicle and are installed according to the chain manufacturer’s suggestions. **Use only SAE Class ‘‘S’’ chains.** Other types may damage your vehicle. Use chain tensioners when recommended by the tire chain manufacturer to ensure a tight fit. Loose end links of the tire chain must be secured or removed to prevent the possibility of whipping action damage to the fenders or underbody. If possible, avoid fully loading your vehicle when using tire chains. In addition, drive at a reduced speed. Otherwise, your vehicle may be damaged and/or vehicle handling and performance may be adversely affected.

Never install tire chains on spare tires. Do not use tire chains on dry roads.

SPECIAL WINTER EQUIPMENT

It is recommended that the following items be carried in the vehicle during winter:

1. A scraper and stiff-bristled brush to remove ice and snow from the windows and wiper blades.
2. A sturdy, flat board to be placed under the jack to give it firm support.
3. A shovel to dig the vehicle out of snowdrifts.
4. Extra window washer fluid to refill the reservoir tank.

DRIVING ON SNOW OR ICE

⚠ WARNING

- **Wet ice (32°F, 0°C and freezing rain), very cold snow or ice can be slick and very hard to drive on. The vehicle will have much less traction or ‘‘grip’’ under these conditions. Try to avoid driving on wet ice until the road is salted or sanded.**
- **Whatever the condition, drive with caution. Accelerate and slow down with care. If accelerating or downshifting too fast, the drive wheels will lose even more traction.**

- **Allow more stopping distance under these conditions. Braking should be started sooner than on dry pavement.**
- **Allow greater following distances on slippery roads.**
- **Watch for slippery spots (glare ice). These may appear on an otherwise clear road in shaded areas. If a patch of ice is seen ahead, brake before reaching it. Try not to brake while on the ice, and avoid any sudden steering maneuvers.**
- **Do not use the cruise control on slippery roads.**
- **Snow can trap dangerous exhaust gases under your vehicle. Keep snow clear of the exhaust pipe and from around your vehicle.**

ENGINE BLOCK HEATER (if so equipped)

An engine block heater to assist extreme cold temperature starting is available through an authorized NISSAN dealer.

⚠ WARNING

Do not use your heater with an ungrounded electrical system or two-pronged (cheater) adapters. You can be injured by an electrical shock if you use an ungrounded connection.

MEMO

6 In case of emergency

Flat tire 6-2
Changing a flat tire 6-2
Jump starting 6-8
Push starting 6-10
If your vehicle overheats 6-10
Towing your vehicle 6-11
Towing recommended by Nissan 6-12
Vehicle recovery (freeing a stuck vehicle) 6-13

CHANGING A FLAT TIRE

If you have a flat tire, follow the instructions below:

Stopping the vehicle

1. Safely move the vehicle off of the road and away from traffic.
2. Turn on the hazard warning flashers.
3. Park on a level surface and apply the parking brake. Shift the manual transmission into R (Reverse), or the automatic transmission into P (Park).
4. Turn off the engine.
5. Raise the hood to warn other traffic, and to signal professional road assistance personnel that you need assistance.
6. Have all passengers get out of the vehicle and stand in a safe place, away from traffic and clear of the vehicle.

⚠ WARNING

- **Make sure the parking brake is securely applied and the manual transmission is shifted into R (Reverse), or the automatic transmission into P (Park).**
- **Never change tires when the vehicle is on a slope, ice or slippery areas. This is hazardous.**
- **Never change tires if oncoming traffic is close to your vehicle. Wait for professional road assistance.**

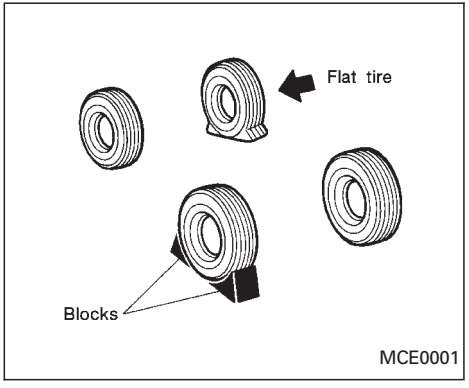

Blocking wheels

Place suitable blocks at both the front and back of the wheel diagonally opposite the flat tire to prevent the vehicle from rolling when it is jacked up.

⚠ WARNING

Be sure to block the wheel as the vehicle may move and result in personal injury.

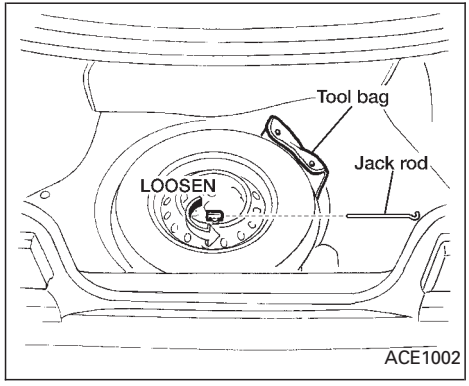

Getting the spare tire and tools

1. Open the trunk. Lift the trunk floor carpeting and spare tire cover. Remove the tool bag (which contains the jack rod and wheel nut wrench) and the spare tire. If necessary, use the flat end of the jack rod as shown to loosen the spare tire hold-down bolt.

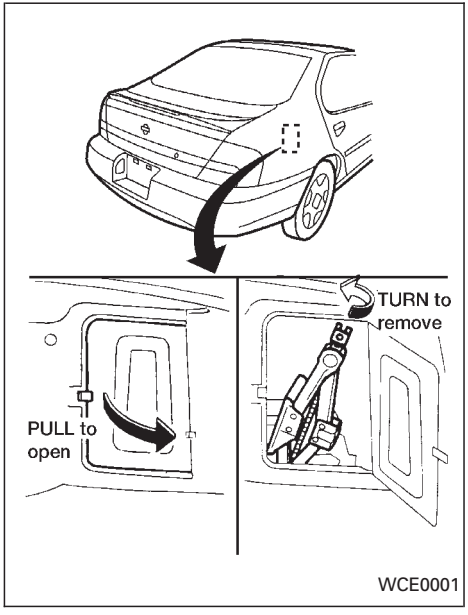

2. Push the release clip on the jack access door to open. To remove the jack, turn the jack screw counterclockwise. Use either end of the jack rod to loosen the jack from its storage position.

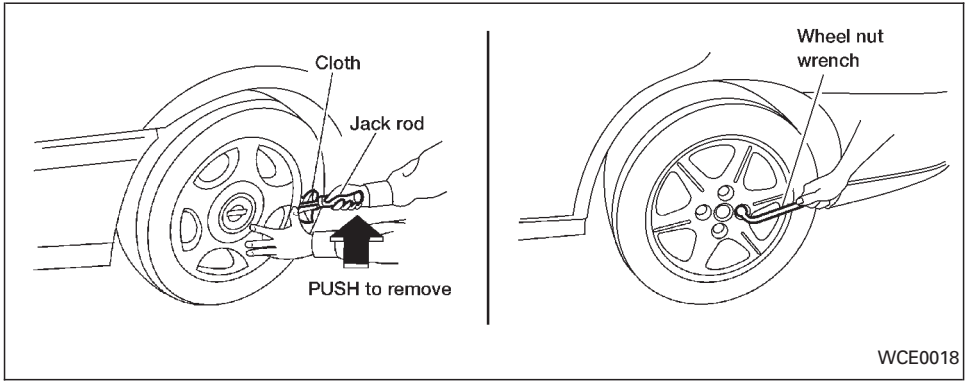

Removing wheel cover

Remove the wheel covers as shown.

CAUTION

Do not use your hands to pry off wheel caps or wheel covers. Doing so could result in personal injury.

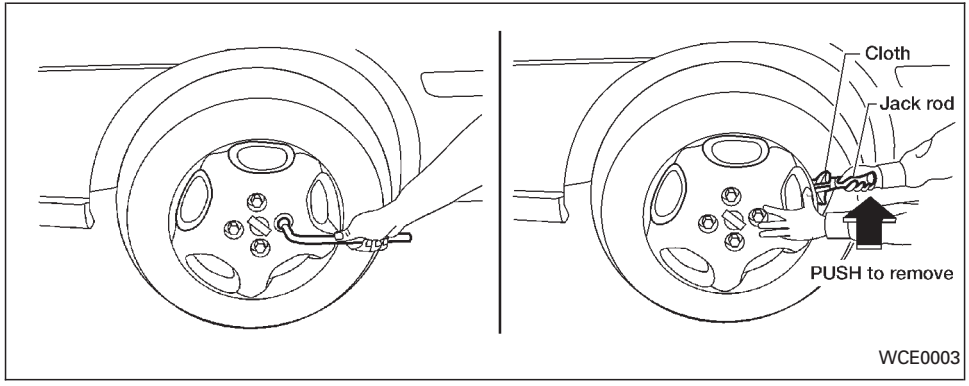

Bolt-on wheel covers:

Wheel cover attachment to the wheel is made by plastic nuts that are integral to the wheel covers. These plastic nuts screw to the outside of the bolt-on specific wheel nuts. The plastic nuts need to be removed before the wheel cover can be removed from the wheel.

Bolt-on wheel cover nut tightening torque:

36-70 in-lb
(4-8 N·m)

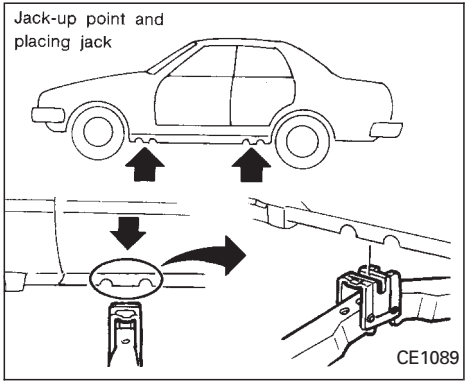

Jacking up vehicle and removing the damaged tire

⚠ WARNING

- **Never get under the vehicle while it is supported only by the jack.**
- **Use only the jack provided with your vehicle. Do not use the jack provided with your vehicle on other vehicles. The jack is designed for lifting only your vehicle during a tire change.**

- **Use the correct jack-up points. Never use any other part of the vehicle for jack support.**
- **Never jack up the vehicle more than necessary.**
- **Never use blocks on or under the jack.**
- **Do not start or run engine while vehicle is on the jack. It may cause the vehicle to move. This is especially true for vehicles with limited slip differential carriers.**
- **Do not allow passengers to stay in the vehicle while it is on the jack.**
- **Never run the engine with the wheels off the ground. It may cause the vehicle to move.**

Carefully read the caution label attached to the jack body and the following instructions:

1. Loosen each wheel nut one or two turns by turning them counterclockwise with the wheel nut wrench. **Do not remove the wheel nuts until the tire is off the ground.**

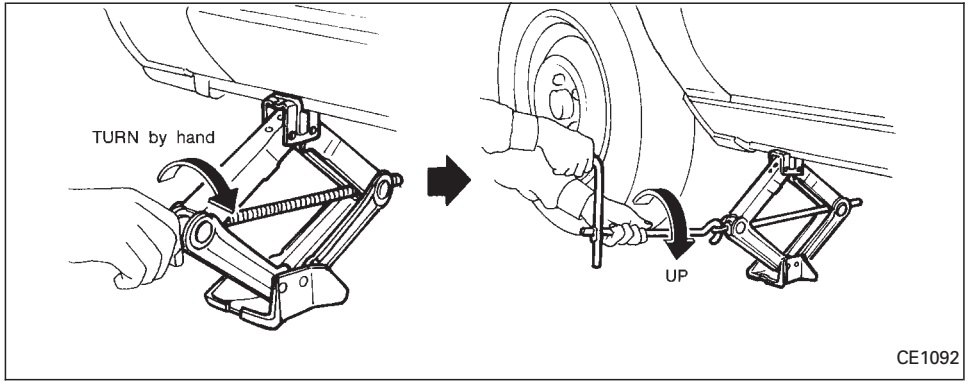

2. Place the jack directly under the jack-up point as illustrated above so the top of the jack contacts the vehicle at the jack-up point. Align the jack head between the two notches in the front or the rear as shown. Also fit the groove of the jack head between the notches as shown.

   The jack should be used on firm and level ground.

3. To lift the vehicle, securely hold the jack lever and rod with both hands as shown. Carefully raise the vehicle until the tire clears the ground. Remove the wheel nuts, and then remove the tire.

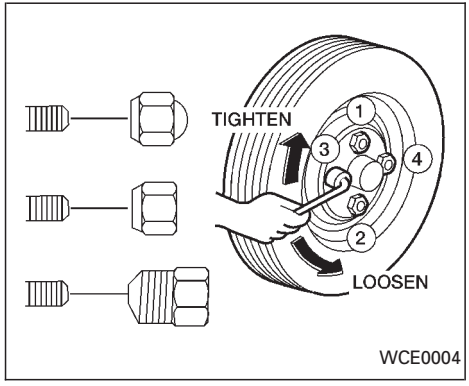

Installing the spare tire

The spare tire is designed for emergency use. See specific instructions under the heading ''Wheels and tires'' in the ''Do-it-yourself'' section.

1. Clean any mud or dirt from the surface between the wheel and hub.
2. Carefully put the spare tire on and install the wheel nuts finger-tight.
3. With the wheel nut wrench, tighten wheel nuts alternately and evenly until they are tight.
4. Lower the vehicle slowly until the tire touches the ground. Then, with the wheel nut wrench, tighten the wheel nuts securely in the sequence as illustrated. Lower the vehicle completely.

⚠ WARNING

- **Incorrect wheel nuts or improperly tightened wheel nuts can cause the wheel to become loose or come off. This could cause an accident.**
- **Do not use oil or grease on the wheel studs or nuts. This could cause the nuts to become loose.**
- **Retighten the wheel nuts when the vehicle has been driven for 600 miles (1,000 km) (also in cases of a flat tire, etc.).**

As soon as possible, tighten the wheel nuts to the specified torque with a torque wrench.

Wheel nut tightening torque:

72 to 86 ft-lb
(98 to 117 N·m)

Adjust tire pressure to the COLD pressure.

COLD pressure: After vehicle has been parked for three hours or more or driven less than 1 mile (1.6 km).

COLD tire pressures are shown on the tire placard affixed to the driver's door, center pillar.

5. With the spare tire installed on the vehicle, place the damaged tire in the spare tire storage area. Put the jack rod and wheel nut wrench in the tool bag and place the tool bag in the spare tire storage area.
6. Place the spare tire cover and the trunk floor carpeting over the damaged tire.

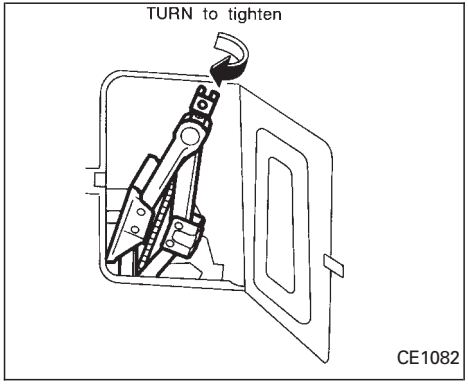

7. Install the jack in its storage area and tighten the jack screw clockwise.
8. Close the jack access door. Close the trunk.

WARNING

- **Always make sure that the spare tire and jacking equipment are properly secured after use. Such items can become dangerous projectiles in an accident or sudden stop.**

- **The spare tire is designed for emergency use. See specific instructions under the heading ‘‘Wheels and tires’’ in the ‘‘Do-it-yourself’’ section of this manual.**

To start your engine with a booster battery, the instructions and precautions below must be followed.

WARNING

- **If done incorrectly, jump starting can lead to a battery explosion, resulting in severe injury or death. It could also damage your vehicle.**
- **Explosive hydrogen gas is always present in the vicinity of the battery. Keep all sparks and flames away from the battery.**
- **Do not allow battery fluid to come into contact with eyes, skin, clothing or painted surfaces. Battery fluid is a corrosive sulfuric acid solution which can cause severe burns. If the fluid should come into contact with anything, immediately flush the contacted area with water.**
- **Keep the battery out of the reach of children.**
- **The booster battery must be rated at 12 volts. Use of an improper rated battery can damage your vehicle.**

- **Whenever working on or near a battery, always wear suitable eye protectors (for example, goggles or industrial safety spectacles) and remove rings, metal bands, or any other jewelry. Do not lean over the battery when jump starting.**
- **Do not attempt to jump start a frozen battery. It could explode and cause serious injury.**
- **Your vehicle has an automatic engine cooling fan. It could come on at any time. Keep hands and other objects away from it.**

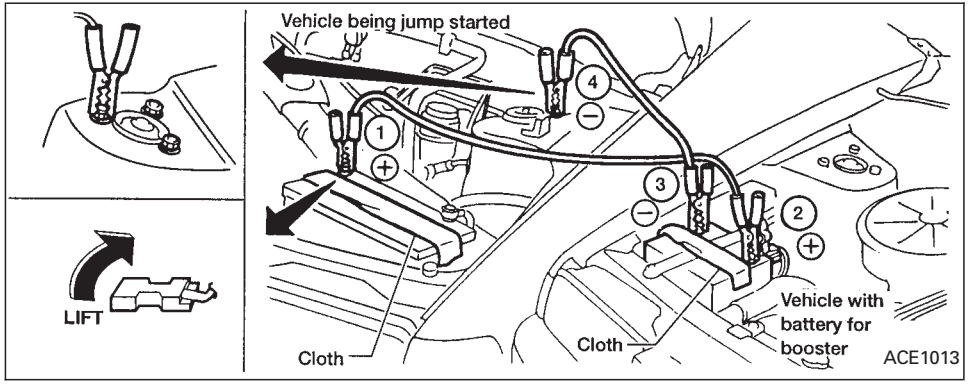

Always follow the instructions below. Failure to do so could result in damage to the charging system and cause personal injury.

1. If the booster battery is in another vehicle, position the two vehicles to bring their batteries into close proximity to each other.

   Do not allow the two vehicles to touch.

2. Apply the parking brake. Move the shift selector lever to N (Neutral) (manual transmission) or to P (Park) (automatic transmission). Switch off all unncessary electrical systems (lights, heater, air conditioner, etc.).
3. Remove vent caps on the battery (if so equipped). Cover the battery with an old cloth to reduce explosion hazard.
4. Connect jumper cables in the sequence as illustrated.

⚠ CAUTION

- **Always connect positive (+) to positive (+) and negative (−) to body ground (for example, strut mounting**

bolt, engine lift bracket, etc.) — not to the battery.

- **Make sure the jumper cables do not touch moving parts in the engine compartment and that the cable clamps do not contact any other metal.**

5. Start the engine of the booster vehicle and let it run for a few minutes.
6. Keep the engine speed of the booster vehicle at about 2,000 rpm, and start the engine of the vehicle being jump started.

⚠ CAUTION

Do not keep starter motor engaged for more than 10 seconds. If the engine does not start right away, turn the key off and wait 3 to 4 seconds before trying again.

7. After starting the engine, carefully disconnect the negative cable and then the positive cable.
8. Replace the vent caps (if so equipped). Be sure to dispose of the cloth used to cover the vent holes as it may be contaminated with corrosive acid.

PUSH STARTING

⚠ CAUTION

- **Automatic transmission models cannot be push started. This may cause transmission damage.**
- **Three way catalyst equipped models should not be started by pushing. The three way catalyst may be damaged.**
- **Never try to start the vehicle by towing it. When the engine starts, the forward surge could cause the vehicle to collide with the tow vehicle.**

IF YOUR VEHICLE OVERHEATS

If your vehicle is overheating (indicated by an extremely high temperature gauge reading), or if you feel a lack of engine power, detect abnormal noise, etc., take the following steps.

⚠ WARNING

- **Do not continue to drive if your vehicle overheats. Doing so could cause a vehicle fire.**
- **To avoid the danger of being scalded, never remove the radiator cap while the engine is still hot. When the radiator cap is removed, pressurized hot water will spurt out, possibly causing serious injury.**
- **Do not open the hood if steam is coming out.**

1. Move the vehicle safely off the road, apply the parking brake and move the shift lever to N (Neutral) (manual transmission) or to P (Park) (automatic transmission).

   Do not stop the engine.
2. Turn off the air conditioner. Open all the windows, move the heater or air conditioner temperature control to maximum hot and fan control to high speed.

3. If engine overheating is caused by climbing a long hill on a hot day, run the engine at a fast idle (approximately 1,500 rpm) until the temperature gauge indication returns to normal.
4. Get out of the vehicle. Look and listen for steam or coolant escaping from the radiator before opening the hood. Wait until no steam or coolant can be seen before proceeding.
5. Open the engine hood.

⚠ WARNING

If steam or water is coming from the engine, stand clear to prevent getting burned.

6. Visually check drive belts for damage or looseness. Also check if the cooling fan is running. The radiator hoses and radiator should not leak water. If coolant is leaking, the water pump belt is missing or loose, or the cooling fan does not run, stop the engine.

⚠ WARNING

Be careful not to allow your hands, hair, jewelry or clothing to come into contact with, or get caught in, engine belts or the engine cooling fan. The engine cooling fan motor can start at any time when the coolant temperature is high.

7. After the engine cools down, check the coolant level in the reservoir tank with the engine running. Add coolant to the reservoir tank if necessary. Have your vehicle repaired at an authorized NISSAN dealer.

When towing your vehicle, all State (Provincial in Canada) and local regulations for towing must be followed. Incorrect towing equipment could damage your vehicle. Towing instructions are available from an authorized NISSAN dealer. Local service operators will generally be familiar with the applicable laws and procedures for towing. To assure proper towing and to prevent accidental damage to your vehicle, NISSAN recommends having a service operator tow your vehicle. It is advisable to have the service operator carefully read the following precautions:

⚠ WARNING

- **Never ride in a vehicle that is being towed.**
- **Never get under your vehicle after it has been lifted by a tow truck.**

⚠ CAUTION

- **When towing, make sure that the transmission, axles, steering system and powertrain are in working condition. If any unit is damaged, dollies must be used.**
- **Always attach safety chains before towing.**

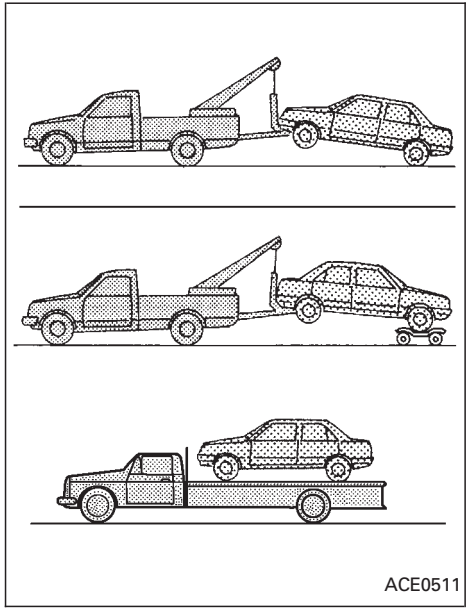

TOWING RECOMMENDED BY NISSAN

NISSAN recommends that your vehicle be towed with the driving (front) wheels off the ground or place the vehicle on a flat bed truck as illustrated.

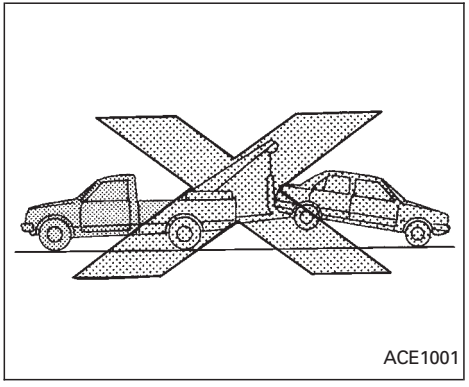

⚠ CAUTION

- **Never tow automatic transmission models with the front wheels on the ground or four wheels on the ground (forward or backward), as this may cause serious and expensive damage to the transmission. If it is necessary to tow the vehicle with the rear wheels raised, always use towing dollies under the front wheels.**
- **When towing automatic transmission models with the front wheels on**

towing dollies, or when towing manual transmission models with the front wheels on the ground:

- **Turn the ignition key to the OFF position, and secure the steering wheel in a straight-ahead position with a rope or similar device. Never place the ignition key in the LOCK position. This will result in damage to the steering lock mechanism.**
- **Move the gearshift lever to the N (Neutral) position.**

- **When towing automatic or manual transmission models with the rear wheels on the ground (if you do not use towing dollies): Always release the parking brake.**

VEHICLE RECOVERY (Freeing a stuck vehicle)

- Tow chains or cables must be attached only to the main structual members of the vehicle.
- Pulling devices should be routed so they do not touch any part of the suspension, steering, brake or cooling systems.
- Always pull the cable straight out from the front or rear of the vehicle. Never pull on the vehicle at an angle.
- Pulling devices such as ropes or canvas straps are not recommended for use in vehicle towing or recovery.
- Stand clear of a stuck vehicle.

⚠ WARNING

Do not spin your tires at high speed. This could cause them to explode and result in serious injury. Parts of your vehicle could also overheat and be damaged.

MEMO

7 Appearance and care

Cleaning exterior 7-2
Washing.....7-2
Waxing.....7-2
Removing spots.....7-3
Underbody 7-3
Glass.....7-3
Aluminum alloy wheels.....7-4
Chrome parts.....7-4
Cleaning interior 7-4
Floor mats.....7-4
Seat belts 7-5
Corrosion protection.....7-5
Most common factors contributing to vehicle corrosion.....7-5
Environmental factors influence the rate of corrosion.....7-5
To protect your vehicle from corrosion 7-6

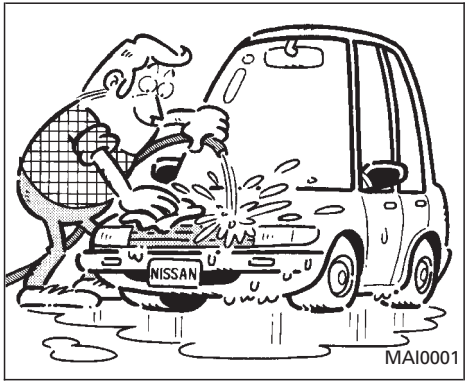

In order to maintain the appearance of your vehicle, it is important to take proper care of it.

In the following cases, please wash your vehicle as soon as possible to protect the paint surface:

- after a rainfall to prevent possible damage from acid rain.
- after driving on coastal roads.
- when contaminants such as soot, bird droppings, tree sap, metal particles or bugs get on the paint surface.
- when dust or mud builds up on the surface.

Whenever possible, store or park your vehicle inside a garage or in a covered area.

When it is necessary to park outside, park in a shady area or protect the vehicle with a body cover.

Be careful not to scratch the paint surface when putting on or removing the body cover.

WASHING

Wash dirt off with a wet sponge and plenty of water. Clean the vehicle thoroughly using a mild soap, a special vehicle soap or general purpose dishwashing liquid mixed with clean, lukewarm (never hot) water.

⚠ CAUTION

- **Do not wash the vehicle with strong household soap, strong chemical detergents, gasoline or solvents.**
- **Do not wash the vehicle in direct sunlight or while the vehicle body is hot, as the surface may become water-spotted.**
- **Avoid using tight-napped or rough cloths, such as washing mitts. Care must be taken when removing caked-on dirt or other foreign substances so that the paint surface is not scratched or damaged.**

Rinse the vehicle thoroughly with plenty of clean water.

Inside flanges, seams and folds on the doors, hatches and hood are particularly vulnerable to the effects of road salt. Therefore, these areas must be regularly cleaned. Take care that the drain holes in the lower edge of the door are open. Spray water under the body and in the wheel wells to loosen the dirt and wash away road salt.

A damp chamois can be used to dry the vehicle to avoid water spots.

WAXING

Regular waxing protects the paint surface and helps retain new vehicle appearance. After waxing, polishing is recommended to remove built-up residue and to avoid a ‘‘weathered’’ appearance.

Your NISSAN dealer can assist you in

choosing the proper product.

- Wax your vehicle only after a thorough washing. Follow the instructions supplied with the wax.
- Do not use a wax containing any abrasives, cutting compounds or cleaners that may damage the vehicle finish.
- If the surface does not polish easily, use a “road tar” remover and wax again.

Machine compounding or aggressive polishing on a base coat/clear coat paint finish may dull the finish or leave swirl marks.

REMOVING SPOTS

Remove tar and oil spots, industrial dust, insects, and tree sap as quickly as possible from the surface of the paint to avoid lasting damage or staining. Special cleaning products are available at an authorized NISSAN dealer or any automotive accessory store.

UNDERBODY

In areas where road salt is used in winter, the underbody must be cleaned regularly. This will prevent dirt and salt from building up and causing underbody and suspension corrosion. Before winter and again in the spring, the underseal must be checked and, if necessary, retreated.

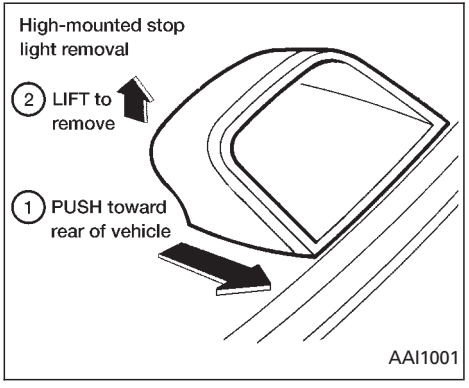

GLASS

When cleaning the rear window, it may be easier to clean if the high-mounted stop light is removed first.

Be careful when removing the high-mounted stop light to reduce the risk of damaging the high-mounted stop light wires.

The high-mounted stop light must be properly reinstalled before driving your vehicle.

Use glass cleaner to remove smoke and dust film from the glass surfaces. It is normal for glass to become coated with a film

after the vehicle is parked in the hot sun. Glass cleaner and a soft cloth will easily remove this film.

CAUTION

When cleaning the inside of the windows, do not use sharp-edged tools, abrasive cleaners or chlorine based disinfectant cleaners. They could damage the electrical conductors, radio antenna, or rear window defogger elements.

ALUMINUM ALLOY WHEELS

Wash regularly, especially during winter months in areas where road salt is used. If not removed, salt could discolor the wheels.

CHROME PARTS

Clean all chrome parts regularly with a non-abrasive chrome polish to maintain the finish.

Occasionally remove loose dust from the interior trim, plastic parts and seats using a vacuum cleaner or soft brush. Wipe the vinyl and leather surfaces with a clean, soft cloth dampened in mild soap solution, then wipe clean with a dry, soft cloth. Before using any fabric protector, read the manufacturer's recommendations. Some fabric protectors contain chemicals that may stain or bleach the seat material. Use a cloth dampened only with water, to clean the meter and gauge lens.

CAUTION

- **Never use benzine, thinner, or any similar material.**
- **The leather seats should be regularly coated with a leather wax like saddle soap. Never use car wax.**
- **Never use fabric protectors unless recommended by the manufacturer.**
- **Do not use glass or plastic cleaner on meter or gauge lens covers. It may damage the lens cover.**

FLOOR MATS

The use of Genuine NISSAN floor mats can extend the life of your vehicle carpet and make it easier to clean the interior. **No matter what mats are used, be sure they are fitted for your vehicle and are properly positioned in the footwell to prevent interference with pedal operation.** Mats should be maintained with regular cleaning and replaced if they become excessively worn.

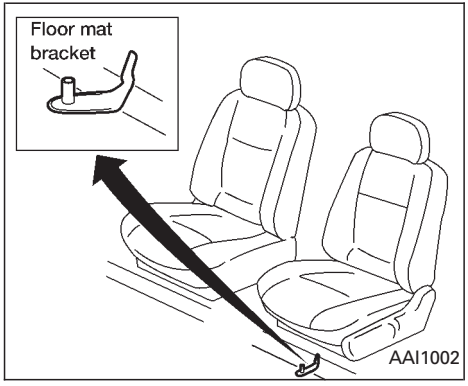

Floor mat positioning aid (Driver's side only)

This vehicle includes a front floor mat bracket to act as a floor mat positioning aid. NISSAN floor mats have been specially designed for your vehicle model. The driver's side floor mat has a grommet hole incorporated in it. Position the mat by placing the floor mat bracket hook through the floor mat grommet hole while centering the mat in the footwell.

Periodically check to make certain the mats are properly positioned.

SEAT BELTS

The seat belts can be cleaned by wiping them with a sponge dampened in a mild soap solution. Allow the belts to dry completely in the shade before using them. See "Seat belt maintenance" in the "Seats, restraints and supplemental air bag systems" section of this owner's manual.

⚠ WARNING

Do not allow wet seat belts to roll up in the retractor. NEVER use bleach, dye, or chemical solvents to clean the seat belts, since these may severely weaken the seat belt webbing.

MOST COMMON FACTORS CONTRIBUTING TO VEHICLE CORROSION

1. The accumulation of moisture-retaining dirt and debris in body panel sections, cavities, and other areas.
2. Damage to paint and other protective coatings caused by gravel and stone chips or minor traffic accidents.

ENVIRONMENTAL FACTORS INFLUENCE THE RATE OF CORROSION

Moisture

Accumulation of sand, dirt and water on the vehicle body underside can accelerate corrosion. Wet floor coverings will not dry completely inside the vehicle, and should be removed for drying to avoid floor panel corrosion.

Relative humidity

Corrosion will be accelerated:

- in areas of high relative humidity.
- in areas where the temperatures stay above freezing.

- where atmospheric pollution exists.
- where road salt is used.

Temperature

A temperature increase accelerates the rate of corrosion to those parts which are not well ventilated.

Air pollution

Industrial pollution, the presence of salt in the air in coastal areas, or heavy road salt use accelerates the corrosion process. Road salt also accelerates the disintegration of paint surfaces.

TO PROTECT YOUR VEHICLE FROM CORROSION

- wash and wax your vehicle often to keep the vehicle clean.
- always check for minor damage to the paint and repair it as soon as possible.
- keep drain holes at the bottom of the doors open to avoid water accumulation.
- check the underbody for accumulation of sand, dirt or salt. If present, wash with water as soon as possible.

⚠ CAUTION

- **NEVER remove dirt, sand or other debris from the passenger compartment by washing it out with a hose. Remove dirt with a vacuum cleaner or broom.**
- **Never allow water or other liquids to come in contact with electronic components inside the vehicle as this may damage them.**

Chemicals used for road surface de-icing are extremely corrosive. They accelerate corrosion and deterioration of underbody components such as the exhaust system, fuel and brake lines, brake cables, floor pan and fenders.

In winter, the underbody must be cleaned periodically.

For additional protection against rust and corrosion, which may be required in some areas, consult an authorized NISSAN dealer.

MEMO

8 Do-it-yourself

Maintenance precautions 8-2
Engine compartment check locations 8-4
Engine cooling system 8-5
Checking engine coolant level 8-5
Changing engine coolant 8-6
Engine oil 8-8
Checking engine oil level 8-8
Changing engine oil 8-9
Changing engine oil filter.....8-10
Automatic transmission fluid 8-11
Temperature conditions for checking.....8-11
Power steering fluid.....8-12
Brake and clutch fluid.....8-12
Brake fluid.....8-12
Clutch fluid.....8-13
Window washer fluid 8-13
Battery 8-14
Jump starting 8-15
Drive belts 8-15
Spark plugs 8-16
Replacing spark plugs 8-16
Air cleaner 8-17
Windshield wiper blades 8-18
Cleaning 8-18
Replacing.....8-18
Parking brake and brake pedal.....8-19
Checking parking brake.....8-19
Checking brake pedal 8-19
Brake booster 8-20
Clutch pedal 8-21
Checking clutch pedal 8-21
Fuses.....8-21
Engine compartment 8-21
Passenger compartment 8-22
Multi-remote controller battery replacement 8-23
Lights 8-24
Headlights.....8-24
Front turn signal lamp 8-28
Front parking and cornering lamp 8-28
Front sidemarker lamp 8-29
Fog lights 8-30
Exterior and interior lights 8-31
Wheels and tires 8-35
Tire pressure 8-35

Types of tires.....8-35
Tire chains.....8-36
Changing tires and wheels.....8-36

MAINTENANCE PRECAUTIONS

When performing any inspection or maintenance work on your vehicle, always take care to prevent serious accidental injury to yourself or damage to the vehicle. The following are general precautions which should be closely observed.

⚠ WARNING

- **Park the vehicle on a level surface, apply the parking brake securely and block the wheels to prevent the vehicle from moving. For manual transmission models, move the shift lever to (N) Neutral. For an automatic transmission models, move the shift selector lever to P (Park).**
- **Be sure the ignition key is in the OFF or LOCK position when performing any parts replacement or repairs.**
- **Your vehicle is equipped with an automatic engine cooling fan. It may come on at any time without warning, even if the ignition key is in the OFF position and the engine is not running. To avoid injury, always disconnect the negative battery cable before working near the fan.**
- **If you must work with the engine running, keep your hands, clothing, hair and tools away from moving fans, belts and any other moving parts.**
- **It is advisable to secure or remove any loose clothing and remove any jewelry, such as rings, watches, etc. before working on your vehicle.**
- **Always wear eye protection whenever you work on your vehicle.**
- **If you must run the engine in an enclosed space such as a garage, be sure there is proper ventilation for exhaust gases to escape.**
- **Never get under the vehicle while it is supported only by a jack. If it is necessary to work under the vehicle, support it with safety stands.**
- **Keep smoking materials, flame and sparks away from the fuel tank and battery.**
- **On gasoline engine models with the multiport fuel injection (MFI) system, the fuel filter or fuel lines should be serviced by an authorized NISSAN dealer because the fuel lines are under high pressure even when the engine is off.**

⚠ CAUTION

- **Do not work under the hood while the engine is hot. Turn off the engine and wait until it cools down.**
- **Never connect or disconnect the battery or any transistorized component while the ignition is in the ON position.**
- **Never leave the engine or automatic transmission related component harnesses disconnected while the ignition is in the ON position.**
- **Avoid contact with used engine oil and coolant. Improperly disposed engine oil, engine coolant, and/or other vehicle fluids can damage the environment. Always conform to local regulations for disposal of vehicle fluid.**

This ‘‘Do-it-yourself’’ section gives instructions regarding only those items which are relatively easy for an owner to perform.

You should be aware that incomplete or improper servicing may result in operating difficulties or excessive emissions, and could affect your warranty coverage. **If in doubt about any servicing, have it done by an authorized NISSAN dealer.**

ENGINE COMPARTMENT CHECK LOCATIONS

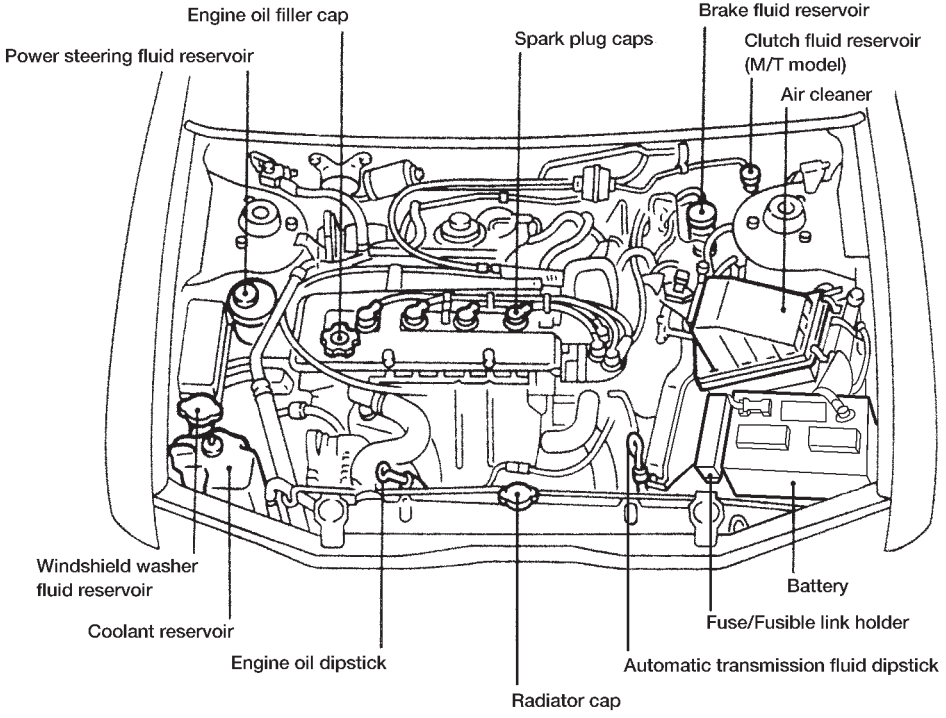

ADI1005

The engine cooling system is filled at the factory with a high-quality, year-round, anti-freeze coolant solution. The anti-freeze solution contains rust and corrosion inhibitors, therefore additional engine cooling system additives are not necessary.

⚠ CAUTION

When adding or replacing coolant, be sure to use only an ethelene glycol anti-freeze with the proper mixture ratio of 50% Genuine Nissan Anti-freeze coolant or equivalent and 50% soft tap water. The use of other types of coolant solutions may damage the engine cooling system.

Outside temperature down to		Genuine Nissan Anti-freeze coolant or equivalent	Soft tap water
°C	°F		
–35	–30	50%	50%

⚠ WARNING

- **Never remove the radiator cap when the engine is hot. Serious burns could be caused by high pressure fluid escaping from the radiator.**
- **The radiator is equipped with a pressure type radiator cap. To prevent engine damage, use only a genuine NISSAN radiator cap.**

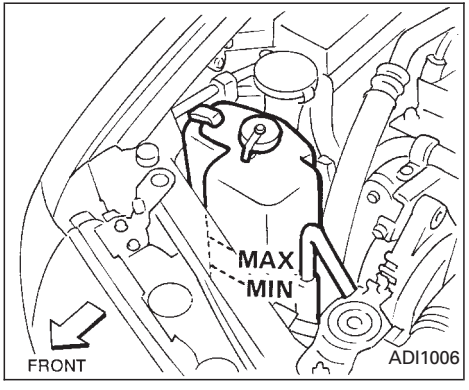

CHECKING ENGINE COOLANT LEVEL

Check the coolant level in the reservoir when the engine is cold. If the coolant level is below MIN, add coolant up to the MAX level. If the reservoir is empty, check the coolant level in the radiator **when the engine is cold.** If there is insufficient coolant in the radiator, fill the radiator with coolant up to the filler opening and also add it to the reservoir up to the MAX level.

If the cooling system frequently requires coolant, have it checked by an authorized NISSAN dealer.

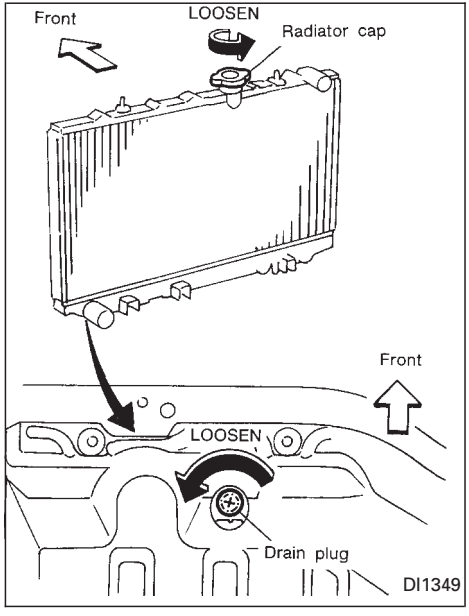

CHANGING ENGINE COOLANT

- Major cooling system repairs should be performed by an authorized NISSAN dealer. The service procedures can be found in an appropriate NISSAN Service Manual.
- Improper servicing can result in reduced heater performance and engine overheating.

⚠ WARNING

- **To avoid the danger of being scalded, never change the coolant when the engine is hot.**
- **Never remove the radiator cap when the engine is hot. Serious burns could be caused by high pressure fluid escaping from the radiator.**
- **Avoid direct skin contact with used coolant. If skin contact is made, wash thoroughly with soap or hand cleaner as soon as possible.**
- **Keep coolant out of reach of children and pets.**

Perform the following procedure to open the heater water cock:

1. Turn the ignition switch ON and set the temperature control lever to the maximum hot position. Wait 10 seconds, then turn the switch OFF.
2. Open the radiator drain plug. Open the

drain plug on the engine water pipe.

3. Open the radiator cap to drain the coolant.
   - Waste coolant must be disposed of properly.
   - Check your local regulations.
4. Flush the cooling system by running fresh water through the radiator.
5. Close the radiator drain plug and the drain plug on the engine water pipe securely.
6. See the ‘‘Technical and consumer information’’ section for cooling system capacity. Fill the radiator slowly with the proper mixture of coolant and water. Fill the reservoir tank up to the MAX level.
7. Open and close the air release plug to release air. Then fill the radiator again and install the radiator cap.
8. Start the engine and let it idle until it reaches normal operating temperature. Then race the engine 2 or 3 times under no load. Watch the engine coolant temperature gauge for signs of overheating.
9. Stop the engine. After it completely cools down, refill the radiator up to the filler opening. Fill the reservoir tank up to the MAX level.
10. Open and close the air release plug to release air. Then fill the radiator again and install the radiator cap.

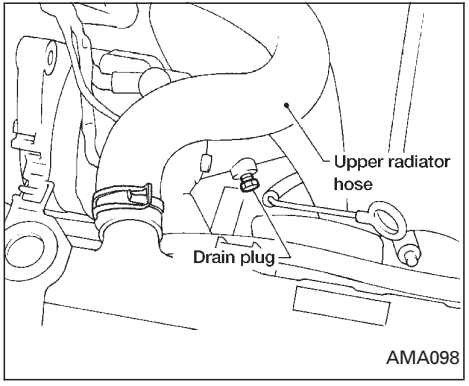

11. Check the radiator drain plug and the drain plug on the engine water pipe for any sign of leakage, tighten if necessary.

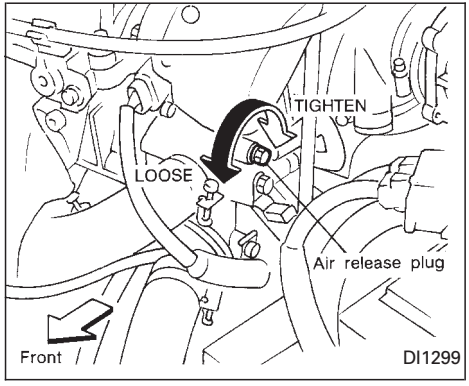

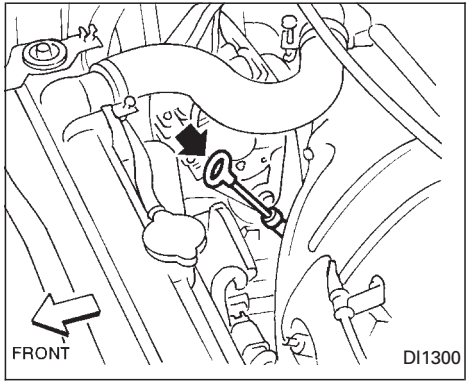

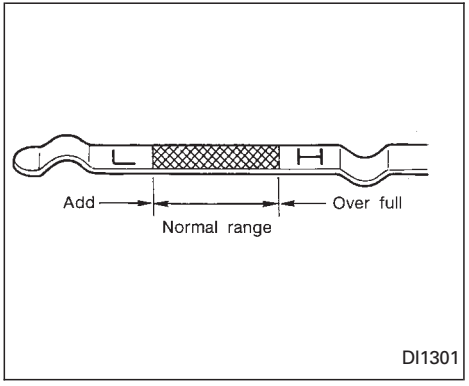

CHECKING ENGINE OIL LEVEL

1. Park the vehicle on a level surface and apply the parking brake.
2. Start the engine and let it idle until it reaches operating temperature.
3. Turn off the engine. **Wait a few minutes for the oil to drain back into the oil pan.**
4. Remove the dipstick and wipe it clean. Reinsert it all the way.
5. Remove the dipstick again and check the oil level. It should be between the H (High) and L (Low) marks. If the oil level is below the L (Low) mark, remove the oil filler cap and pour recommended oil through the opening. **Do not overfill.**
6. Recheck the oil level with the dipstick.

It is normal to add some oil between oil maintenance intervals or during the break-in period, depending on the severity of operating conditions.

⚠ CAUTION

Oil level should be checked regularly. Operating the engine with an insufficient amount of oil can damage the engine, and such damage is not covered by warranty.

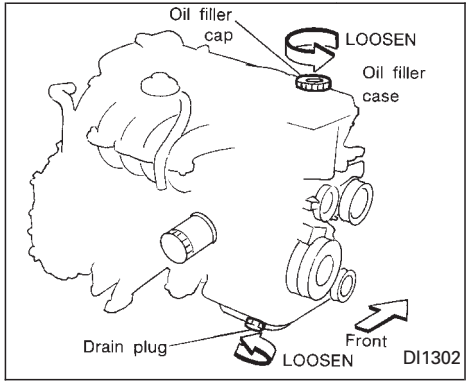

CHANGING ENGINE OIL

1. Park the vehicle on a level surface and apply the parking brake.
2. Start the engine and let it idle until it reaches operating temperature, then turn it off.
3. Remove the oil filler cap.
4. Place a large drain pan under the drain plug.
5. Remove the drain plug with a wrench and completely drain the oil.

   If the oil filter is to be changed, remove and replace it at this time. See ‘‘Changing engine oil filter’’ later in this section.

⚠ CAUTION

Be careful not to burn yourself. The engine oil may be hot.

- **Waste oil must be disposed of properly.**
- **Check your local regulations.**

6. Clean and reinstall the drain plug and a new washer. Securely tighten the drain plug with a wrench.

   Drain plug tightening torque:

   22 to 29 ft-lb
   (29 to 39 N·m)

   Do not overtighten.

7. Refill the engine with a recommended oil through the oil filler opening, then install the oil filler cap securely.

   See the ‘‘Technical and consumer information’’ section for drain and refill capacity.

The drain and refill capacity depends on the oil temperature and drain time. Use these specifications for reference only. Always

use the dipstick to determine when the proper amount of oil is in the engine.

8. Start the engine. Check for leakage around the drain plug. Correct as required.
9. Turn the engine off and wait several minutes. Check the oil level with the dipstick. Add engine oil if necessary.

⚠ WARNING

- **Prolonged and repeated contact with used engine oil may cause skin cancer.**
- **Try to avoid direct skin contact with used oil. If skin contact is made, wash thoroughly with soap or hand cleaner as soon as possible.**
- **Keep used engine oil out of reach of children.**

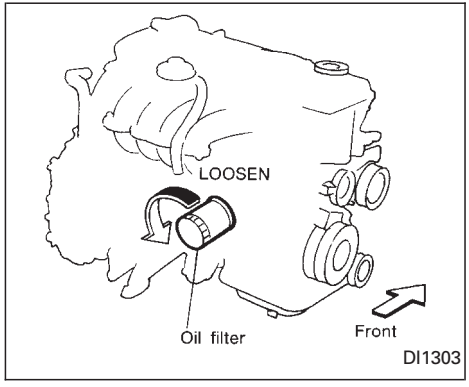

CHANGING ENGINE OIL FILTER

1. Park the vehicle on a level surface and apply the parking brake.
2. Turn the engine off.
3. Place a large drain pan under the oil filter.
4. Loosen the oil filter with an oil filter wrench. Then, remove the oil filter by turning it by hand.

⚠ CAUTION

Be careful not to burn yourself. The engine oil may be hot.

5. Wipe the engine oil filter mounting surface with a clean rag.

   Be sure to remove any old gasket material remaining on the mounting surface of the engine.
6. Coat the gasket on the new filter with clean engine oil.
7. Screw on the oil filter until a slight resistance is felt, then tighten an additional 2/3 turn.
8. Start the engine and check for leakage around the oil filter. Correct as required.
9. Turn the engine off and wait several minutes. Check the oil level. Add engine oil if necessary.

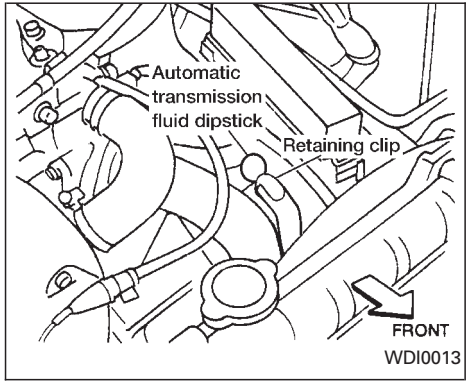

⚠ WARNING

- **When the engine is running, keep hands, jewelry and clothing away from any moving parts such as the cooling fan and drive belts.**
- **Automatic transmission fluid is poisonous and should be stored carefully in marked containers out of the reach of children.**

TEMPERATURE CONDITIONS FOR CHECKING

- The fluid level should be checked using the HOT range on the dipstick after the following conditions have been met:

— The engine should be warmed up to operating temperature.

— The vehicle should be driven at least 5 minutes.

— The automatic transmission fluid should be warmed to between 122° and 176°F (50° to 80°C).

- The fluid can be checked at fluid temperatures of 86° to 122°F (30 to 50°C) using the COLD range on the dipstick, after the engine is warmed up and before driving. However, the fluid should be re-checked using the HOT range.

1. Park the vehicle on a level surface and set the parking brake.
2. Start the engine and then move the shift selector lever through each gear range. Move the shift selector lever to P (Park) after you have moved it through all ranges.

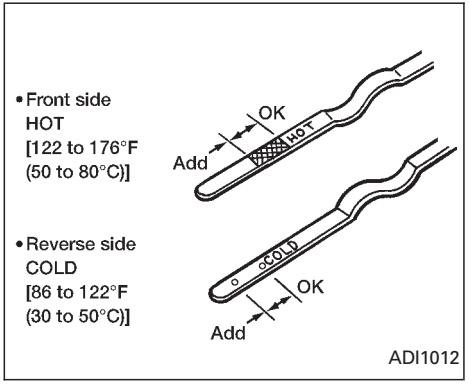

3. Check the fluid level with the engine idling.
4. Remove the dipstick and wipe it clean with lint-free paper.
5. Reinsert the dipstick into the dipstick tube as far as it will go.
6. Remove the dipstick and note the reading. If the level is at the low side of either range, add fluid through the dipstick tube.

⚠ CAUTION

DO NOT OVERFILL. USE ONLY NISSAN Matic 'D' (Continental U.S. and Alaska) or Canada NISSAN Automatic Transmission Fluid. Dexron™ III/Mercon™ or equivalent may also be used. Outside the continental United States and Alaska contact an authorized NISSAN dealership for more information regarding suitable fluids, including recommended brand(s) of Dexron™ III/Mercon™ Automatic Transmission Fluid.

NOTE:

If the vehicle has been driven for a long time at high speeds, or in city traffic in hot weather, or if it is being used to pull a trailer, the accurate fluid level cannot be read. You should wait until the fluid has cooled down (about 30 minutes).

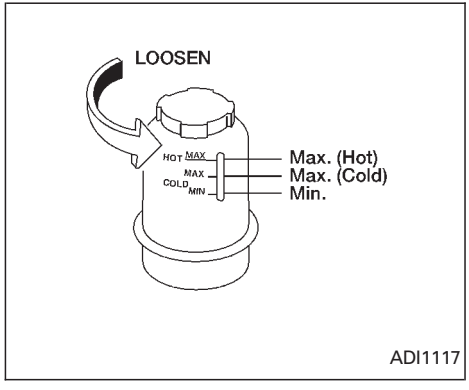

The fluid level should be checked using the HOT MAX range on the power steering fluid reservoir at fluid temperatures of 122° to 176°F (50° to 80°C) or using the COLD MAX range on the power steering fluid reservoir at fluid temperatures of 32° to 86°F (0 to 30°C).

⚠ CAUTION

- **DO NOT OVERFILL.**
- **Recommended fluid is Genuine NISSAN PSF II or equivalent.**

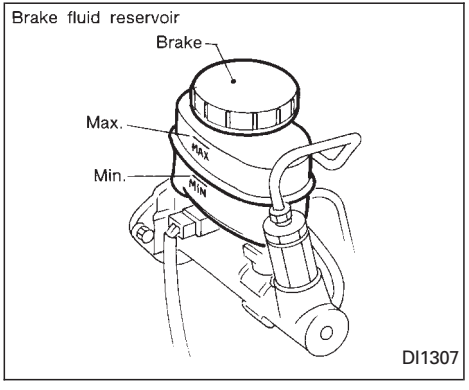

BRAKE FLUID

Check the brake fluid level in the reservoir. If the fluid level is below the MIN line or the brake warning light comes on, add Genuine Nissan Brake Fluid or equivalent **DOT 3** fluid up to the MAX line. If fluid must be added frequently, the system should be thoroughly checked by an authorized NISSAN dealer.

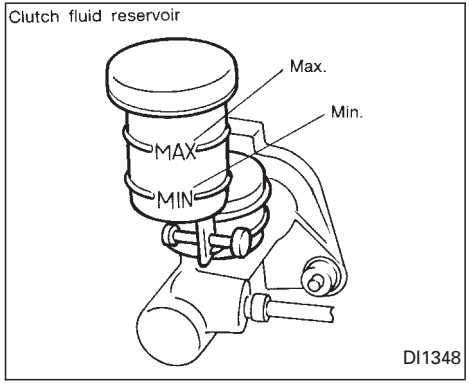

CLUTCH FLUID

Check the clutch fluid level in the reservoir (manual transmission only). If the fluid level is below the MIN line, add Genuine Nissan Brake Fluid or equivalent **DOT 3** fluid up to the MAX line. If fluid must be added frequently, the system should be thoroughly checked by an authorized NISSAN dealer.

For further brake and clutch fluid specification information, refer to ‘‘Capacities and recommended fuel/lubricants’’ in the ‘‘Technical and consumer information’’ section of this manual.

⚠ WARNING

Use only new fluid from a sealed container. Old, inferior, or contaminated fluid may damage the brake and clutch systems. The use of improper fluids can damage the brake system and affect the vehicle’s stopping ability.

⚠ CAUTION

Do not spill the fluid on painted surfaces. This will damage the paint. If fluid is spilled, immediately wash the surface with water.

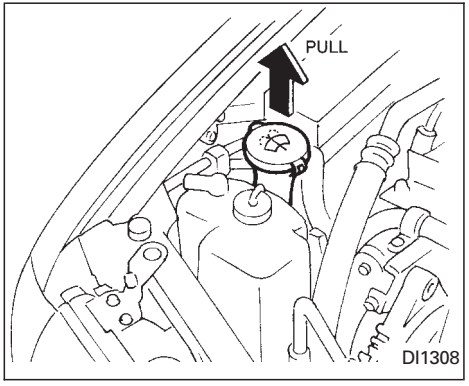

To fill the window washer fluid reservoir, lift the cap off the reservoir tank and pour the window washer fluid into the tank opening.

Add a washer solvent to the water for better cleaning. In the winter season, add a windshield washer antifreeze. Follow the manufacturer’s instructions for the mixture ratio.

For USA

Fill the window washer fluid reservoir periodically. Perform the refilling operation more often under driving conditions that require an increased amount of window washer fluid.

For Canada

Add window washer fluid when the light comes on.

CAUTION

Do not substitute engine anti-freeze coolant for windshield washer solution. This may result in damage to the paint.

- Keep the battery surface clean and dry. Any corrosion should be washed off with a solution of baking soda and water.
- Make certain the terminal connections are clean and securely tightened.
- If the vehicle is not to be used for 30 days or longer, disconnect the negative (—) battery terminal cable to prevent discharge.

WARNING

- **Do not expose the battery to flames or electrical sparks. Hydrogen gas generated by the battery is explosive. Do not allow battery fluid to contact your skin, eyes, fabrics, or painted surfaces. After touching a battery or battery cap, do not touch or rub your eyes. Thoroughly wash your hands. If the acid contacts your eyes, skin or clothing, immediately flush with water for at least 15 minutes and seek medical attention.**
- **When working on or near the battery, always wear suitable eye protection and remove all jewelry.**
- **Battery posts, terminals and related accessories contain lead and lead compounds. Wash hands after handling.**
- **Keep the battery out of the reach of children.**

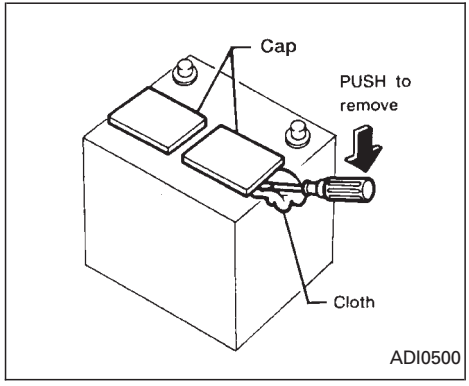

1. To remove the cap, gently pry between the battery cap and cover as illustrated.

   Use a cloth to protect the battery case.

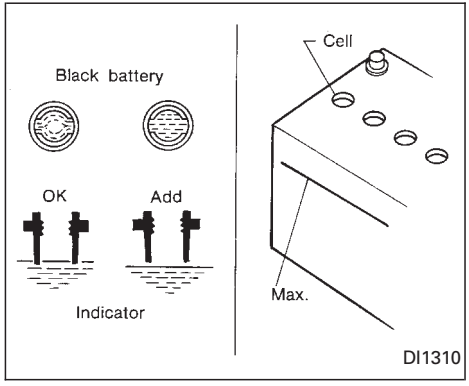

2. Check the fluid level in each cell.

   If it is necessary to add fluid, add only distilled water to bring the level up to the OK level indicator in each filler opening. **Do not overfill.**

JUMP STARTING

If jump starting is necessary, see the ‘‘In case of emergency’’ section of this owner’s manual. If the engine does not start by jump starting, the battery may have to be replaced. Contact an authorized NISSAN dealer.

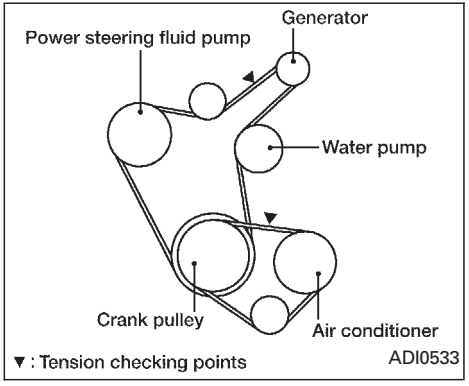

⚠ WARNING

Be sure the ignition key is in the OFF or LOCK position. The engine could rotate unexpectedly.

1. Visually inspect each belt for signs of unusual wear, cuts, fraying or looseness. If the belt is in poor condition or is loose, have it replaced or adjusted by an authorized NISSAN dealer.
2. Have the belts checked regularly for condition and tension in accordance with the maintenance schedule found in the ‘‘Maintenance’’ section of this manual.

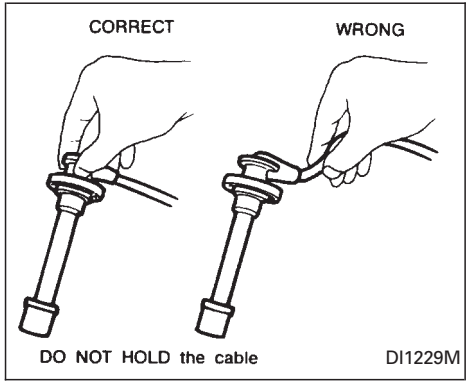

REPLACING SPARK PLUGS

⚠ WARNING

Be sure the engine and ignition switch are off and that the parking brake is engaged securely.

⚠ CAUTION

Be sure to use the correct socket to remove the spark plugs. An incorrect socket can damage the spark plugs.

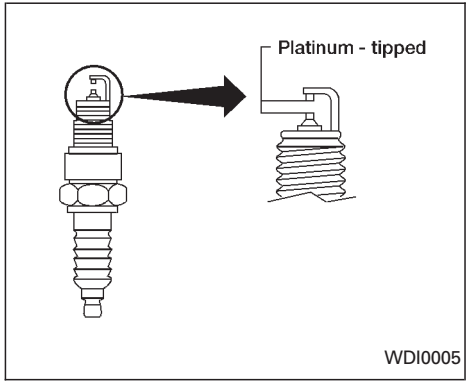

Platinum-tipped spark plugs

It is not necessary to replace platinum-tipped spark plugs as frequently as conventional type spark plugs because they last much longer. Follow the maintenance schedule, but do not reuse the spark plugs by cleaning or regapping.

- **Always replace spark plugs with recommended or equivalent ones.**

1. Remove brackets as necessary to give access to the high tension spark plug cables and spark plugs.
2. Disconnect the spark plug cables from the spark plugs.

   When disconnecting, always hold the boots, not the cables. Mark all cables to identify their original locations.
3. Remove the spark plugs with a spark plug socket.

   The plug socket has a rubber seal that holds the spark plug so it does not fall when it is pulled out. Make sure each spark plug is snugly fitted into the spark plug socket.
4. Fit the new plugs, one at a time, into the spark plug socket and install them. **Use only the specified spark plugs.** Turn each plug several full turns by hand, then tighten with the spark plug socket to the correct torque. Do not overtighten.

   Spark plug tightening torque:

   14 to 22 ft-lb
   (20 to 29 N·m)
5. Holding the boot, reconnect each high tension cable to its proper spark plug by pushing it on until you feel a snap.
6. Reinstall all brackets as necessary.

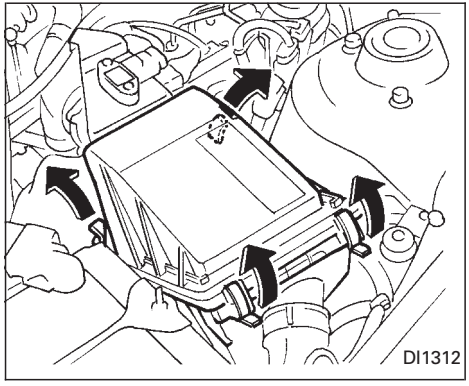

The air cleaner filter should not be cleaned and reused. Replace it according to the maintenance intervals shown in the ‘‘Maintenance’’ section of this manual. When replacing the filter, wipe the inside of the air cleaner filter housing and the cover with a damp cloth.

⚠ WARNING

- **Operating the engine with the air cleaner removed can cause you or others to be burned. The air cleaner not only cleans the air, it stops the flame if the engine backfires. If it isn’t there, and the engine backfires, you could be burned. Do not drive with the air cleaner removed, and be careful when working on the engine with the air cleaner removed.**
- **Never pour fuel into the throttle body or attempt to start the engine with the air cleaner removed. Doing so could result in serious injury.**

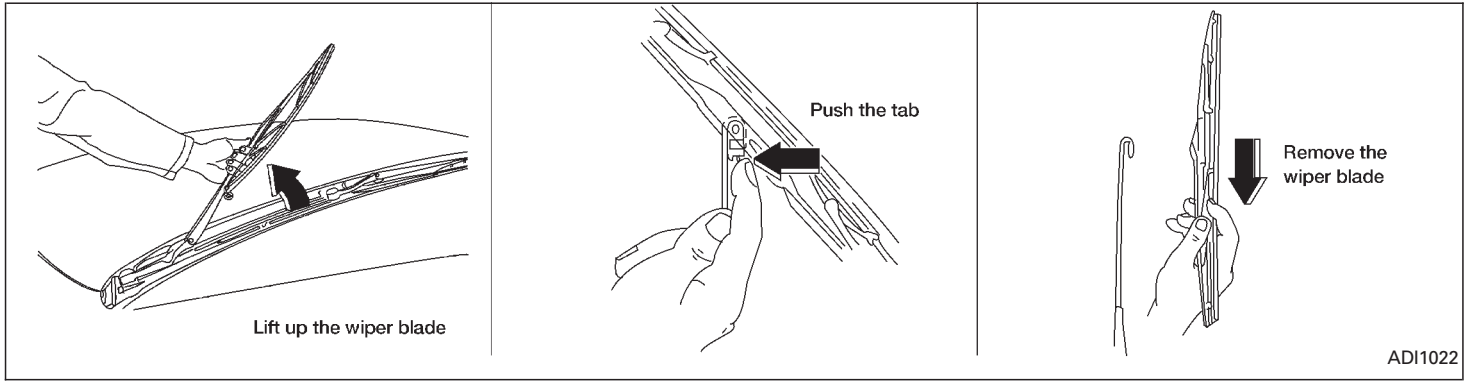

CLEANING

If your windshield is not clear after using the windshield washer or if a wiper blade chatters when running, wax or other material may be on the blade or windshield.

Clean the outside of the windshield with a washer solution or a mild detergent. Your windshield is clean if beads do not form when rinsing with clear water.

Clean each blade by wiping it with a cloth soaked in a washer solution or a mild detergent. Then rinse the blade with clear water. If your windshield is still not clear after cleaning the blades and using the wiper, replace the blades.

REPLACING

1. Pull the wiper arm away from the windshield.
2. Push the tab, then move the wiper blade down the wiper arm to remove.
3. Remove the wiper blade.
4. Insert the new wiper blade onto the wiper arm until it clicks.

⚠ CAUTION

- **After wiper blade replacement, return the wiper arm to its original position; otherwise it may be damaged when the hood is opened.**
- **Make sure the wiper blades contact the glass; otherwise the arms may be damaged from wind pressure.**

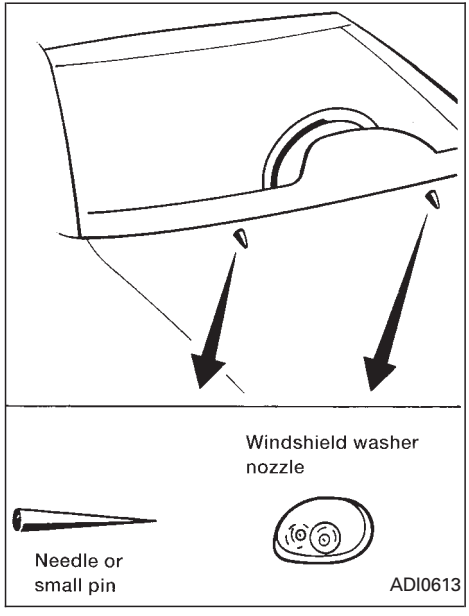

If you wax the surface of the hood, be careful not to let wax get into the washer nozzle. This may cause clogging or improper windshield washer operation. If wax gets into the nozzle, remove it with a needle or small pin.

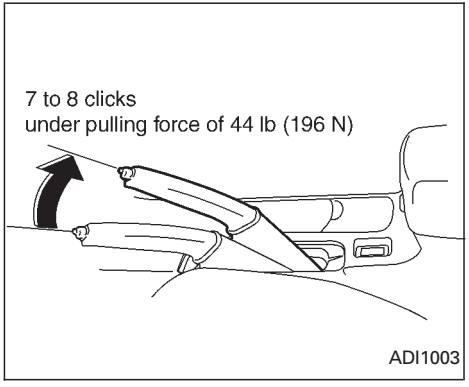

CHECKING PARKING BRAKE

From the released position, pull the parking brake lever up slowly and firmly. If the number of clicks is out of the range listed above, see an authorized NISSAN dealer.

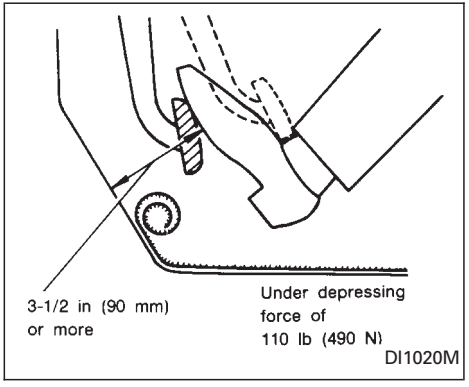

CHECKING BRAKE PEDAL

With the engine running, check the distance between the upper surface of the pedal and the metal floor. If it is out of the range shown above, see an authorized NISSAN dealer.

Self-adjusting brakes

Your vehicle is equipped with self-adjusting brakes.

The front (and rear, if equipped) disc-type brakes self-adjust every time the brake pedal is applied. The rear drum-type brakes also self-adjust every time the brake pedal is applied.

If the brake pedal goes down farther than normal, it may be due to a lack of adjustment of the rear drum brakes. To adjust, apply the parking brake several times.

⚠ WARNING

See an authorized NISSAN dealer for a brake system check if the brake pedal height does not return to normal.

Brake pad wear indicators

The disc brake pads on your vehicle have audible wear indicators. When a brake pad requires replacement, it makes a high pitched scraping or screeching sound when the vehicle is in motion whether or not the brake pedal is depressed. Have the brakes checked as soon as possible if the wear indicator sound is heard.

Under some driving or climate conditions, occasional brake squeak, squeal or other noise may be heard. Occasional brake noise during light to moderate stops is normal and does not affect the function or performance of the brake system.

The rear drum brakes (if so equipped) do not have audible wear indicators. Should you ever hear an unusually loud noise from the rear drum brakes, have them inspected as soon as possible by an authorized NISSAN dealer.

Proper brake inspection intervals should be followed. For more information regarding brake inspections, see the appropriate maintenance schedule information in the ‘‘Maintenance’’ section of this manual.

BRAKE BOOSTER

Check the brake booster function as follows:

1. With the engine off, press and release the brake pedal several times. When brake pedal movement (distance of travel) remains the same from one pedal application to the next, continue on to the next step.
2. While depressing the brake pedal, start the engine. The pedal height should drop a little.
3. With the brake pedal depressed, stop the engine. Keep the pedal depressed for about 30 seconds. The pedal height should not change.
4. Run the engine for one minute without depressing the brake pedal, then turn it off. Depress the brake pedal several times. The pedal travel distance will decrease gradually with each depression as the vacuum is released from the booster.

If the brakes do not operate properly, see an authorized NISSAN dealer.

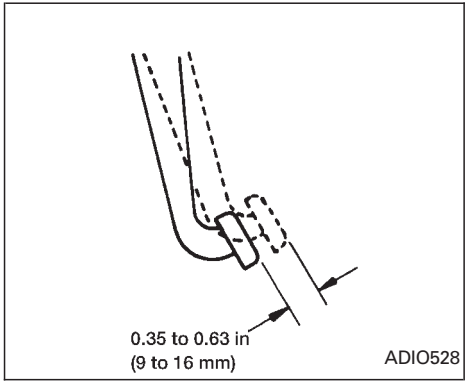

CHECKING CLUTCH PEDAL

Press the pedal by hand and be sure the free travel is within the limits shown above. If free travel is out of the range shown above, see an authorized NISSAN dealer.

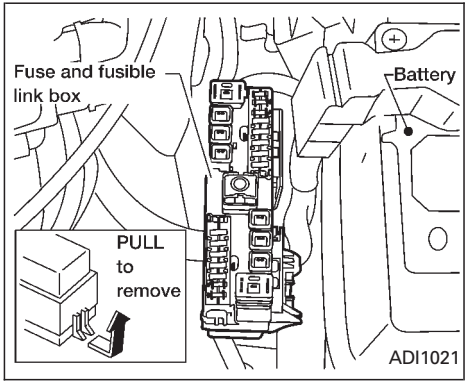

ENGINE COMPARTMENT

⚠ CAUTION

Never use a fuse of a higher amperage rating than specified on the fuse box cover. This could damage the electrical system or cause a fire.

If the electrical equipment does not come on, check for an open fuse.

1. Be sure the ignition switch and the headlight switch are OFF.
2. Open the engine hood.
3. Remove the fuse box cover.
4. Remove the fuse with the fuse puller located in the passenger compartment fuse box.
5. If the fuse is open, replace it with a new fuse.
6. If a new fuse also opens, have the electrical system checked and repaired by an authorized NISSAN dealer.

Fusible links

If the electrical equipment does not operate and fuses are in good condition, check the fusible links. If any of these fusible links are melted, replace only with genuine NISSAN parts.

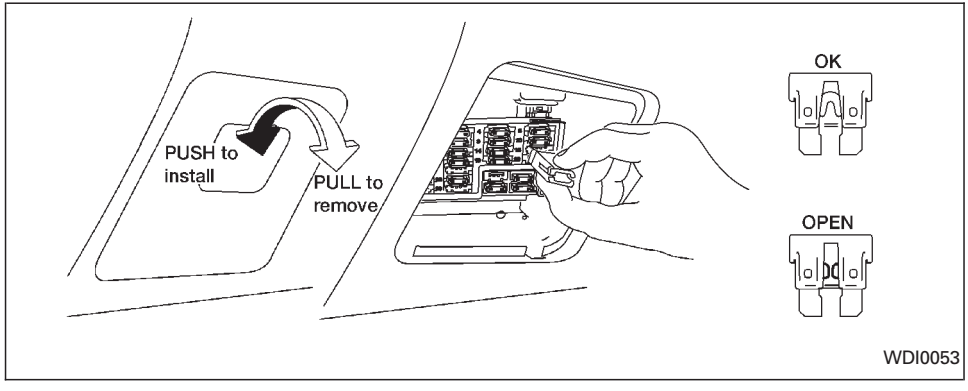

PASSENGER COMPARTMENT

⚠ CAUTION

Never use a fuse of a higher amperage rating than specified on the fuse box cover. This could damage the electrical system or cause a fire.

If any electrical equipment does not operate, check for an open fuse.

1. Be sure the ignition switch and the headlight switch are OFF.
2. Open the fuse box cover.
3. Remove the fuse with the fuse puller.
4. If the fuse is open, replace it with a new fuse.
5. If a new fuse also opens, have the electrical system checked and repaired by an authorized NISSAN dealer.

MULTI-REMOTE CONTROLLER BATTERY REPLACEMENT

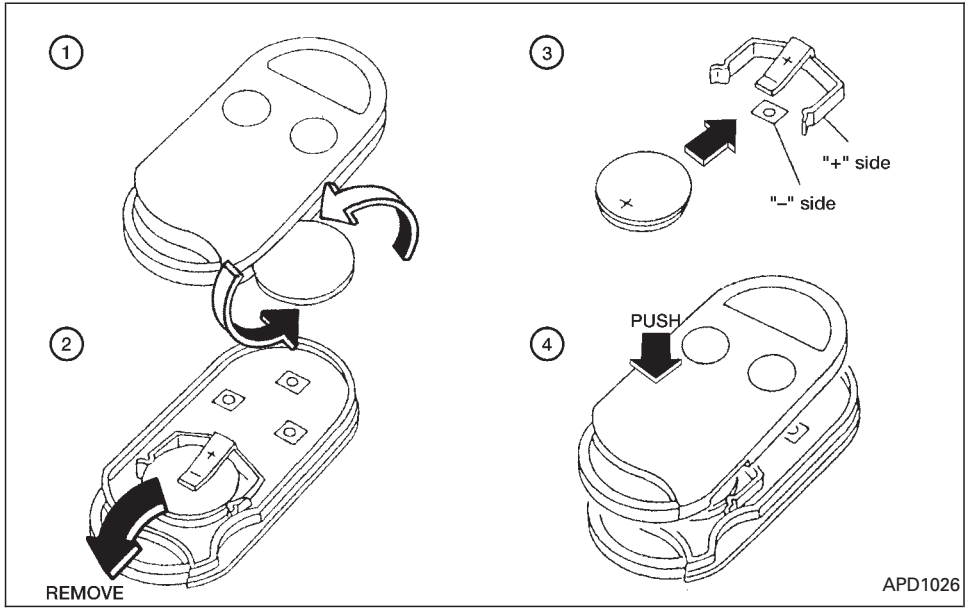

Replace the battery in the multi-remote controller as follows:

1. Open the lid using a coin.

2. Replace the battery with a new one. Recommended battery: Sanyo CR2025 or equivalent.

3. Close the lid securely.

4. Press the button, then the button two or three times to check the multi-remote controller operation.

Each time the button is pressed, the hazard lights flash once.

If the battery is removed for any reason other than replacement, perform step 4.

- **An improperly disposed battery can hurt the environment. Always confirm local regulations for battery disposal.**
- **The multi-remote controller is water-resistant; however, if it does get wet, immediately wipe completely dry.**
- **The operational range of the multi-remote controller extends to approximately 33 ft (10 m) from the vehicle. This range may vary with conditions.**

FCC Notice:

Changes or modifications not expressly approved by the manufacturer for compliance could void the user's authority to operate the equipment.

This device complies with part 15 of the FCC Rules and RSS-210 of Industry Canada.

HEADLIGHTS

The headlamp is a semi-sealed beam type which uses a replaceable halogen bulb. Because the headlamp assembly must be removed from the vehicle for bulb replacement, it is recommended that your vehicle be taken to an authorized NISSAN Dealer.

Replacing the headlight bulb

⚠ CAUTION

- **Do not leave the headlamp assembly open without a bulb installed for a long period of time. Dust, moisture, smoke, etc. entering the headlamp body may affect bulb performance. Remove the bulb from the headlamp assembly just before a replacement bulb is installed.**
- **Only touch the plastic base when handling the bulb. Never touch the glass envelope. Touching the glass could significantly affect bulb life and/or headlamp performance.**
- **High pressure halogen gas is sealed inside the halogen bulb. The bulb may break if the glass envelope is scratched or the bulb is dropped.**
- **Use the same number and wattage as originally installed:**

  Wattage 65/55
  Bulb no. 9007(HB5)
- **Aiming is not necessary after replacing the bulb. When aiming adjustment is necessary, contact an authorized NISSAN dealer.**

1. Disconnect the negative (-) battery cable.

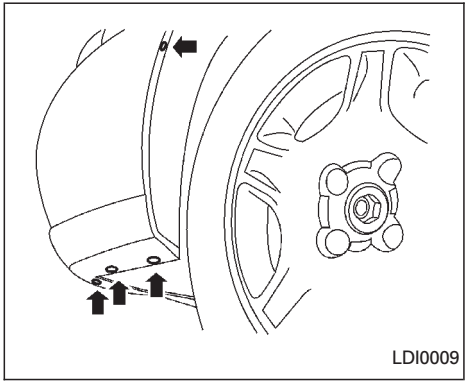

2. Remove the four screws from the bottom of the front fender protector (see above illustration) and position the fender protector aside to allow access to the headlamp mounting fasteners.

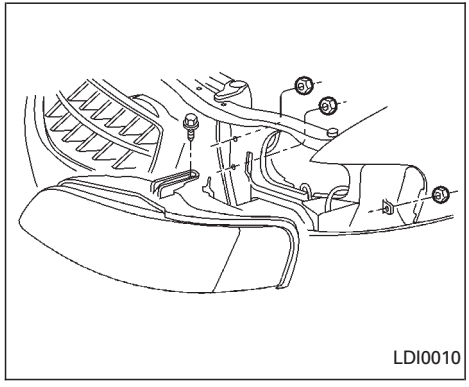

3. Remove the three nuts and one bolt mounting the headlamp assembly (see above illustration).
4. Pull the headlamp assembly evenly away from the front of the vehicle to access the bulb sockets.

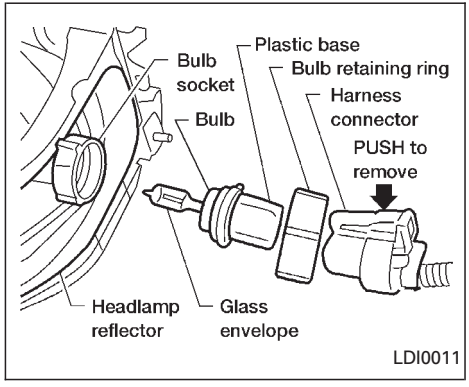

5. Disconnect the harness connector from the back side of the bulb socket (see above illustration).
6. Turn the bulb retaining ring counter-clockwise until it is free from the head-lamp assembly and then remove it.
7. Remove the bulb by pulling it straight out of the lamp assembly. Do not shake the bulb when removing it.
8. Follow the instructions in reverse order to install new bulb.

Headlamp mounting nuts and bolt torque: 36 to 47 in-lb (4.1 to 5.3 N·m)

Adjusting the headlight aim

Before performing aiming adjustment, make sure of the following:

a. Use an aiming wall screen.

b. Keep all of the tires inflated to the correct pressure.

c. Place the vehicle and screen on level ground.

d. See that the vehicle is unloaded (except for full levels of coolant, engine oil and fuel, and that the spare tire, jack, and tools are stored). Have the driver or an equivalent weight placed in the driver's seat.

Low beam

1. Open the hood. Turn headlamp low beam on.
2. Adjust the vertical aim by turning the adjusting screw.

- Cover the opposite lamp and ensure the fog lamps (if so equipped) are turned off.
- Adjust beam pattern until cutoff line is positioned at the same height off ground as bulb center (on H-line).

If the vehicle front body has been repaired and/or the headlight assembly has been replaced, check aiming. Use the aiming chart shown in the illustration.

- Basic illuminating area should be within the range shown. Adjust headlamps accordingly.

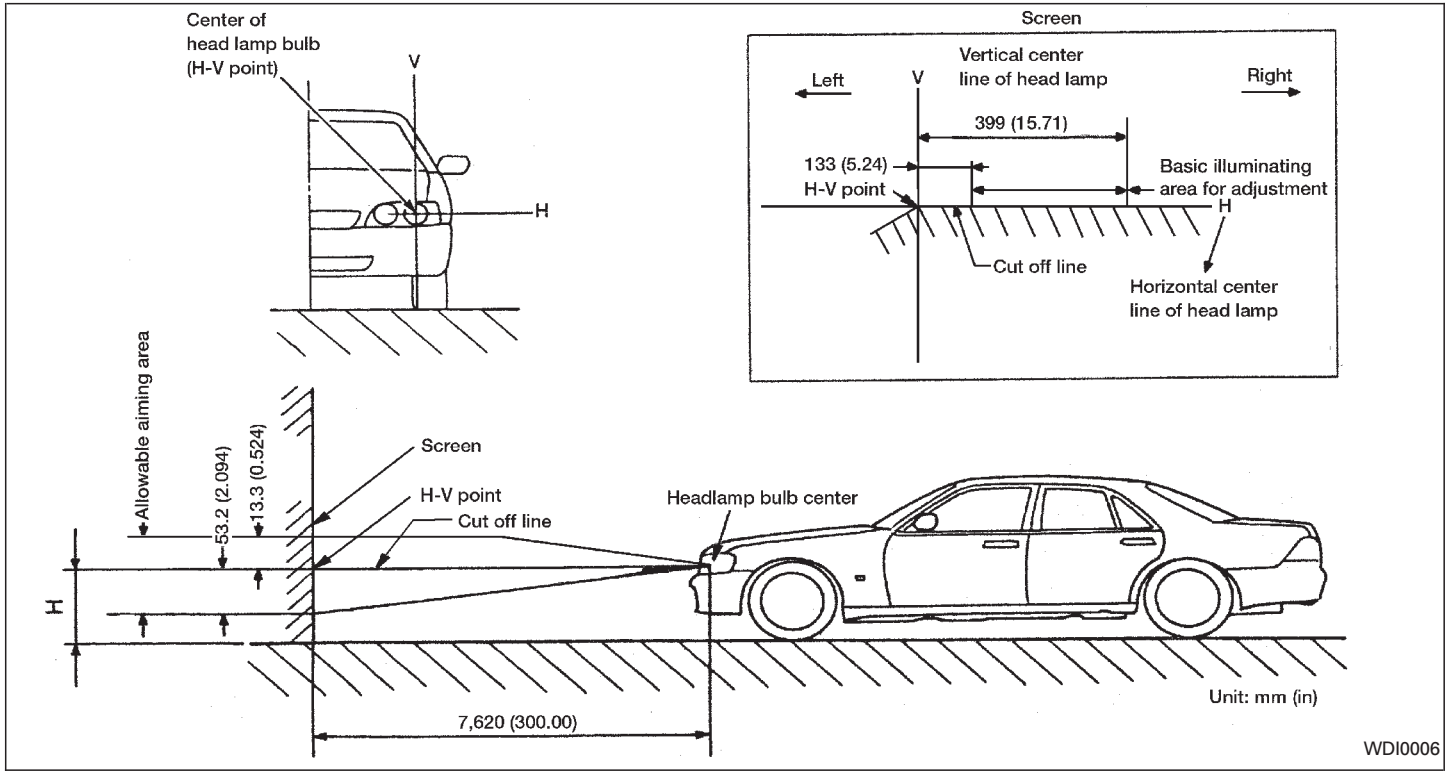
Center of
head lamp bulb
(H-V point)
V
H
Screen
Vertical center
line of head lamp
Left
V
Right
399 (15.71)
133 (5.24)
H-V point
Basic illuminating
area for adjustment
H
Cut off line
Horizontal center
line of head lamp
Allowable aiming area
53.2 (2.094)
13.3 (0.524)
Screen
H-V point
Cut off line
Headlamp bulb center
H
7,620 (300.00)
Unit: mm (in)
WDI0006

FRONT TURN SIGNAL LAMP

Replacing the front turn signal lamp bulb

1. Disconnect the negative (-) battery cable.
2. Reach between the grille and radiator to access the turn signal bulb socket.
3. Rotate the socket counter-clockwise and pull it out of the headlamp assembly. Do not shake the bulb socket when removing it.
4. Pull the bulb out of the socket.
5. Follow the instructions in reverse order to install new bulb.

FRONT PARKING AND CORNERING LAMP

Replacing the front parking and cornering lamp bulb

1. Disconnect the negative (-) battery cable.

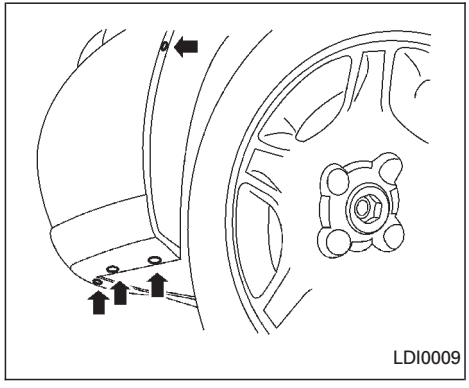

2. Remove the four screws from the bottom of the front fender protector (see above illustration) and position the fender protector aside to allow access to the headlamp mounting fasteners.

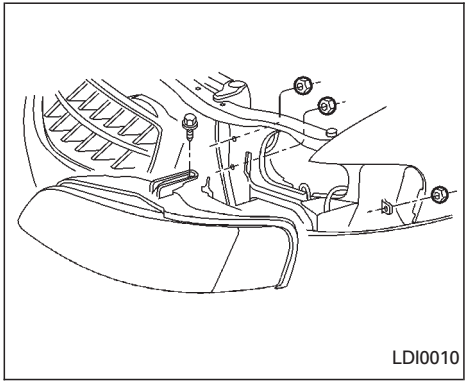

3. Remove the three nuts and one bolt mounting the headlamp assembly (see above illustration).
4. Pull the headlamp assembly evenly away from the front of the vehicle to access the bulb sockets.
5. Rotate the socket counter-clockwise and pull it out of the headlamp assembly. Do not shake the bulb socket when removing it.
6. Pull the bulb out of the socket.
7. Follow the instructions in reverse order to install new bulb.

Headlamp mounting nuts and bolt torque: 36 to 47 in-lb (4.1 to 5.3 N·m)

FRONT SIDEMARKER LAMP

Replacing the front sidemarker lamp bulb

1. Disconnect the negative (-) battery cable.

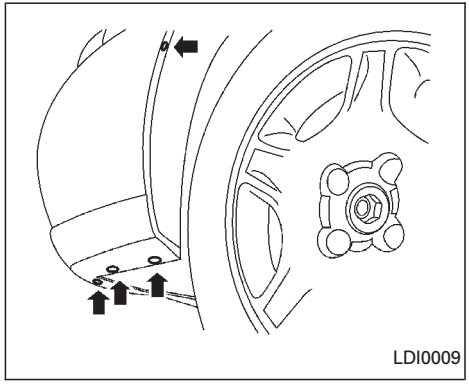

2. Remove the four screws from the bottom of the front fender protector (see above illustration) and position the fender protector aside to allow access to the headlamp mounting fasteners.

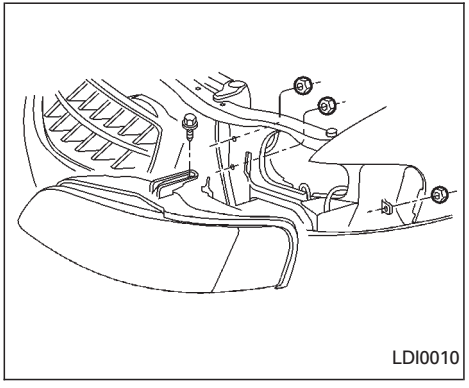

3. Remove the three nuts and one bolt mounting the headlamp assembly (see above illustration).
4. Pull the headlamp assembly evenly away from the front of the vehicle to access the bulb sockets.
5. Rotate the socket counter-clockwise and pull it out of the headlamp assembly. Do not shake the bulb socket when removing it.
6. Pull the bulb out of the socket.
7. Follow the instructions in reverse order to install new bulb.

Headlamp mounting nuts and bolt torque: 36 to 47 in-lb (4.1 to 5.3 N·m)

FOG LIGHTS

Replacing the fog light bulb

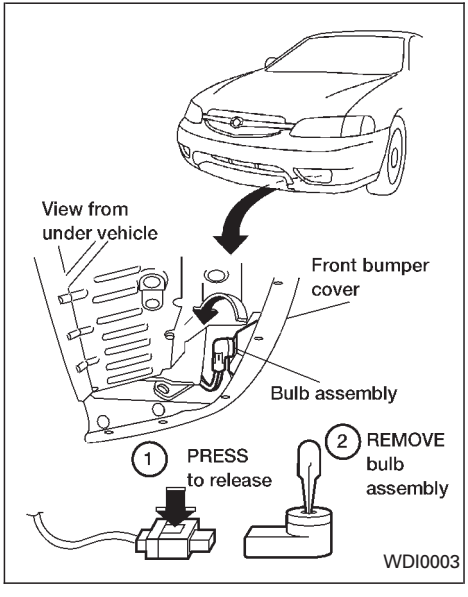

EXTERIOR AND INTERIOR LIGHTS

Item	Wattage (W)	Bulb No.
Headlamp assembly		
High/Low	65/55	HB5 (9007)
Front turn signal	30	3457AK
Parking and cornering	27/8	3157K
Side marker	3.8	194
Front fog light	37.5	881L
Rear combination light:		
Turn signal:	27	3156K
Stop/Tail	27/8	3157K
Back-up	18	921
License plate light	5	168
High-mounted stop light		
inside	18	921
spoiler (if so equipped)	See an authorized NISSAN dealer for assistance	
Interior light	8	68
Map light	10	578
Trunk light	3.4	158
Glove box light (if so equipped)	1.1	658

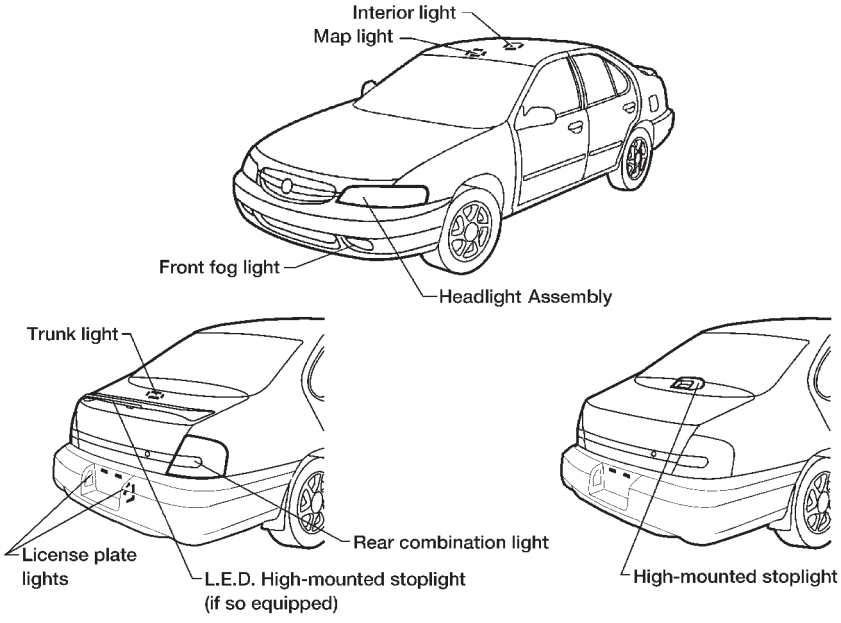

WDI0052

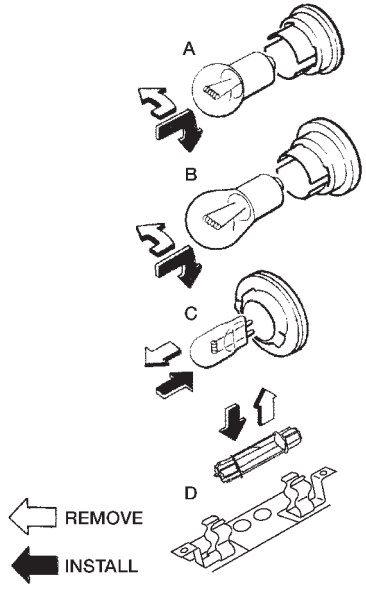

ADI1049

Replacement procedures

All other lights are either type A, B, C or D. When replacing a bulb, first remove the lens and/or cover.

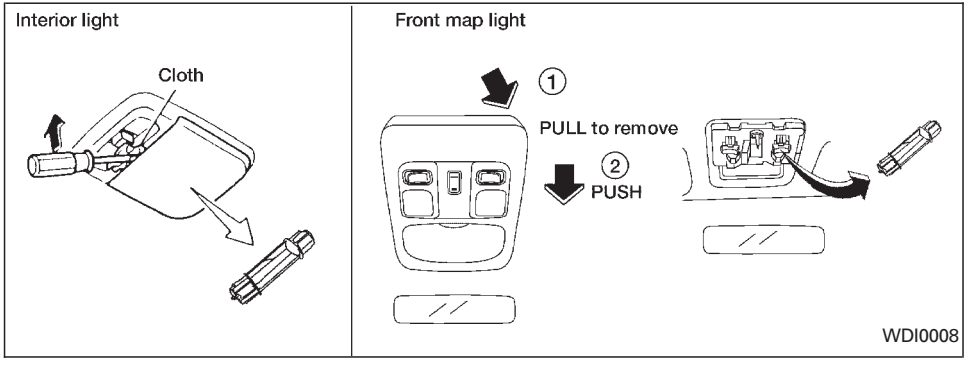
Interior light
Cloth
Front map light
1
PULL to remove
2
PUSH
WDI0008

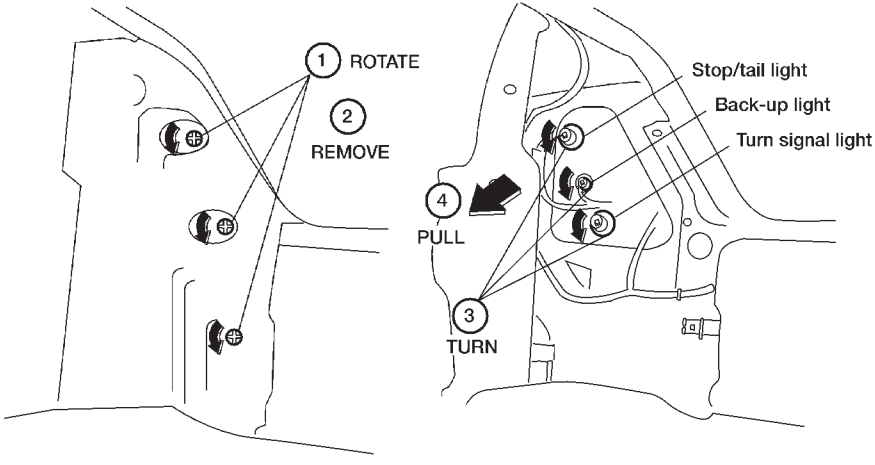
1 ROTATE
2 REMOVE
4 PULL
3 TURN
Stop/tail light
Back-up light
Turn signal light

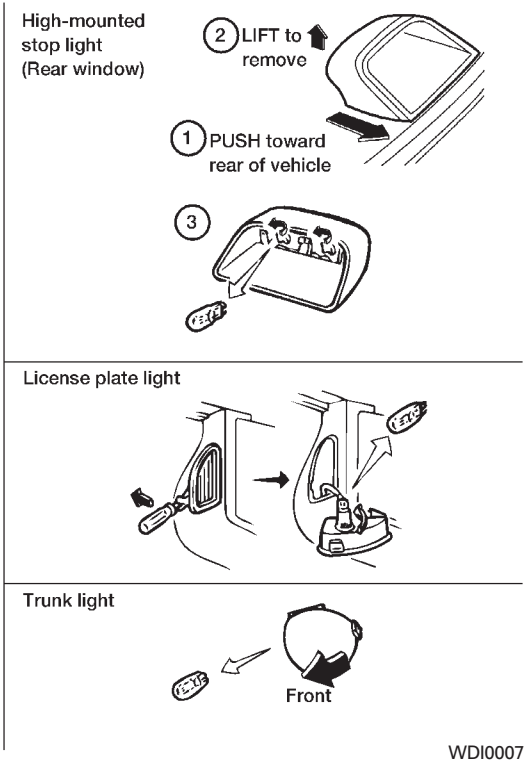
High-mounted stop light (Rear window)
2 LIFT to remove
1 PUSH toward rear of vehicle
3
License plate light
Trunk light
Front
WDI0007

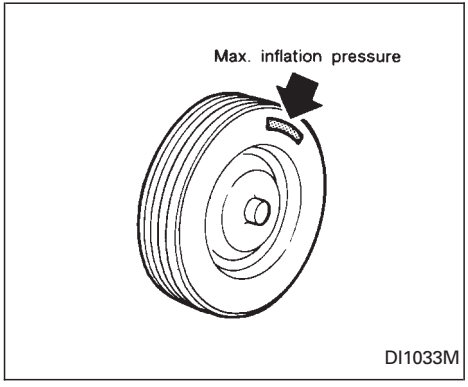

If you have a flat tire, see the ‘‘In case of emergency’’ section of this manual.

TIRE PRESSURE

Maximum inflation pressure

Do not exceed the maximum inflation pressures shown on the side wall of the tire.

Tire inflation pressure

Periodically check the tire pressure (including the spare). Incorrect tire pressure may adversely affect tire life and vehicle handling. Tire pressure should be checked when tires are COLD. Tires are considered COLD after the vehicle has been parked for three or more hours, or driven less than 1 mile (1.6 km). COLD tire pressures are shown on the tire placard affixed to the driver’s door center pillar.

⚠ WARNING

- **Improperly inflated tires can fail suddenly and cause an accident.**
- **The vehicle weight capacity is indicated on the tire placard. Do not load your vehicle beyond this capacity. Overloading your vehicle may result in reduced tire life, unsafe operating conditions due to premature tire failure, or unfavorable handling characteristics and could also lead to a serious accident. Loading beyond the specified capacity may also result in failure of other vehicle components.**
- **Before taking a long trip, or whenever you heavily load your vehicle, use a tire pressure gauge to ensure that the tire pressures are at the specified level.**
- **Do not drive your vehicle over 85 MPH (140 km/h) unless it is equipped with high speed rated tires. Driving faster than 85 MPH (140 km/h) may result in tire failure, loss of control and possible injury.**

TYPES OF TIRES

⚠ WARNING

When changing or replacing tires, be sure all four tires are of the same type (i.e., summer, all season or snow) and construction. An authorized NISSAN dealer may be able to help you with information about tire type, size, speed rating and availability. Replacement tires may have a lower speed rating than the factory equipped tires, and may not match the potential maximum vehicle speed. Never exceed the maximum speed rating of the tire.

All Season tires

NISSAN specifies All Season tires on some models to provide good performance for use all year around, including snowy and icy road conditions. All Season Tires are identified by ALL SEASON and/or M&S on the tire sidewall. Snow tires have better snow traction than All Season tires and may be more appropriate in some areas.

Summer tires

NISSAN specifies summer tires on some models to provide superior performance on dry roads. Summer tire performance in snow and ice is substantially reduced. Summer tires do not have the tire traction rating M&S on the tire sidewall.

If you plan to operate your vehicle in snowy or icy conditions, NISSAN recommends the use of SNOW or ALL SEASON tires on all four wheels.

Snow tires

If snow tires are needed, it is necessary to select tires equivalent in size and load rating to the original equipment tires. If you do not, it can adversely affect the safety and handling of your vehicle.

Generally, snow tires have lower speed ratings than factory equipped tires and may not match the potential maximum vehicle speed. Never exceed the maximum speed rating of the tire.

For additional traction on icy roads, studded tires may be used. However, some U.S States and Canadian Provinces prohibit their use. Check local, state and provincial laws before installing studded tires. Skid and traction capabilities of studded snow tires on wet or dry surfaces may be poorer than that of non-studded snow tires.

TIRE CHAINS

Use of tire chains may be prohibited according to location. Check the local laws before installing tire chains. When installing tire chains, make sure they are of proper size for the tires on your vehicle and are installed according to the chain manufacturer's suggestions. **Use only SAE class ''S'' chains.** Other types may damage your vehicle. Use chain tensioners when recommended by the tire chain manufacturer to ensure a tight fit. Loose end links of the tire chain must be secured or removed to prevent the possibility of whipping action damage to the fenders or underbody. If possible, avoid fully loading your vehicle when using tire chains. In addition, drive at a reduced speed. Otherwise, your vehicle may be damaged and/or vehicle handling and performance may be adversely affected.

Never install tire chains on TEMPORARY USE ONLY spare tires. Do not use tire chains on dry roads.

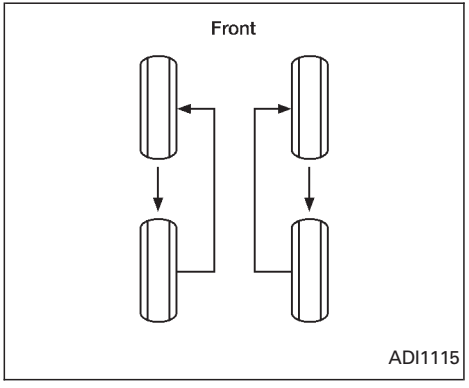

Tire chains must be installed only on the front wheels and not on the rear wheels.

CHANGING TIRES AND WHEELS

Tire rotation

Tires should be rotated every 7,500 miles (12,000 km).

See ''Flat tire'' in the ''In case of emergency'' section for tire replacing procedures.

As soon as possible, tighten the wheel nuts to the specified torque with a nut tightening torque:

72 to 87 ft-lb (98 to 118 N·m)

The wheel nuts must be kept tightened to specifications at all times. It is recommended that wheel nuts be tightened to specification at each rotation interval.

⚠ WARNING

- **After rotating the tires, check and adjust the tire pressure.**
- **Retighten the wheel nuts when the vehicle has been driven for 600 miles (1,000 km) (also in cases of a flat tire, etc.).**
- **Do not include the spare tire in the tire rotation.**

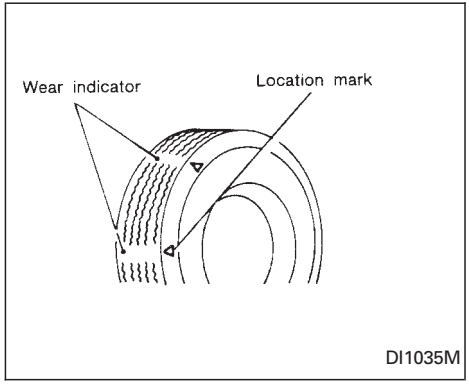

Tire wear and damage

⚠ WARNING

- **Tires should be periodically inspected for wear, cracking, bulging, or objects caught in the tread. If excessive wear, cracks, bulging, or deep cuts are found, the tire(s) should be replaced.**
- **The original tires have a built-in tread wear indicator. When the wear indicator is visible, the tire(s) should be replaced.**
- **Improper service of the spare tire may result in serious personal injury. If it is necessary to repair the spare tire, contact an authorized NISSAN dealer.**

Replacing wheels and tires

When replacing a tire, use the same size, tread design, speed rating and load carrying capacity as originally equipped. Recommended types and sizes are shown in ‘‘wheels/tire size’’ in the ‘‘Technical and consumer information’’ section of this manual.

⚠ WARNING

- **The use of tires other than those recommended, or the mixed use of tires of different brands, construction (bias, bias-belted, radial), or tread patterns can adversely affect the ride, braking, handling, ground clearance, body-to-tire clearance, tire chain clearance, speedometer calibration, headlight aim and bumper height. Some of these effects may lead to accidents and could result in serious personal injury.**

- **If the wheels are changed for any reason, always replace with wheels which have the same off-set dimension. Wheels of a different off-set could cause pre-mature tire wear, degrade vehicle handling characteristics and/or interference with the brake discs/drums. Such interference can lead to decreased braking efficiency and/or early brake pad/shoe wear. Refer to ''Wheel/tire size'' in the ''Technical and consumer information'' section of this manual for wheel off-set dimensions.**
- **Do not install a deformed wheel or tire even if it has been repaired. Such wheels or tires could have unknown structural damage and could fail without warning.**
- **The use of retread tires is not recommended.**

Wheel balance

Unbalanced wheels may affect vehicle handling and tire life. Even with regular use, wheels can get out of balance. Therefore, they should be balanced as required.

Wheel balance service should be performed with the wheels off the vehicle. Spin balancing the front wheels on the vehicle could lead to transmission damage.

Care of wheels

- Wash the wheels when washing the vehicle to maintain their appearance.
- Clean the inner side of the wheels when the wheel is changed or the underside of the vehicle is washed.
- Do not use abrasive cleaners when washing the wheels.
- Inspect wheel rims regularly for dents or corrosion. Such damage may cause loss of pressure or poor seal at the tire bead.
- NISSAN recommends waxing the road wheels to protect against road salt in areas where it is used during winter.

Spare tire (TEMPORARY USE ONLY spare tire)

Observe the following precautions if the TEMPORARY USE ONLY spare tire must be used, otherwise your vehicle could be damaged or involved in an accident:

⚠ WARNING

- **The spare tire should be used for emergency use only. It should be replaced with the standard tire at the first opportunity to avoid possible tire or differential damage.**
- **Drive carefully while the TEMPORARY USE ONLY spare tire is installed. Avoid sharp turns and abrupt braking while driving.**
- **Periodically check spare tire inflation pressure. Always keep the pressure of the TEMPORARY USE ONLY spare tire at 60 psi (420 kPa, 4.2 bar).**
- **With the TEMPORARY USE ONLY spare tire installed do not drive the vehicle at speeds faster than 50 MPH (80 km/h).**
- **When driving on roads covered with snow or ice, the TEMPORARY USE ONLY spare tire should be used on the rear wheels and the original tire used on the front wheels (drive wheels). Use tire chains only on the front (original) tires.**

- **Tire tread of the TEMPORARY USE ONLY spare tire will wear at a faster rate than the standard tire. Replace the spare tire as soon as the tread wear indicators appear.**
- **Do not use the spare tire on other vehicles.**
- **Do not use more than one spare tire at the same time.**
- **Do not tow a trailer when the TEMPORARY USE ONLY spare tire is installed.**

⚠ CAUTION

- **Do not use tire chains on the TEMPORARY USE ONLY spare tire. Tire chains will not fit properly and may cause damage to the vehicle.**
- **Because the TEMPORARY USE ONLY spare tire is smaller than the original tire, ground clearance is reduced. To avoid damage to the vehicle, do not drive over obstacles. Also, do not drive the vehicle through an automatic car wash since it may get caught.**

MEMO

9 Maintenance

Maintenance precautions 9-2
General maintenance 9-2
Explanation of maintenance items 9-2
Exterior maintenance.....9-2
Interior maintenance.....9-3
Periodic maintenance schedules 9-5
Schedule 1 9-5
Schedule 2 9-5
Explanation of maintenance items 9-10

MAINTENANCE PRECAUTIONS

Your new NISSAN has been designed to have minimum maintenance requirements with longer service intervals to save you both time and money. However, some day-to-day and regular maintenance is essential to maintain your NISSAN's good mechanical condition, as well as its emission and engine performance.

It is the owner's responsibility to make sure the specified periodic maintenance, as well as general maintenance, is performed.

As the vehicle owner, you are the only one who can ensure that your vehicle receives proper maintenance. You are a vital link in the maintenance chain.

General maintenance

General maintenance includes those items which should be checked during normal day-to-day operation of the vehicle. They are essential if your vehicle is to continue to operate properly. It is your responsibility to perform these maintenance procedures regularly as prescribed.

These checks or inspections can be done by yourself, a qualified technician or, if you prefer, an authorized NISSAN dealer.

Periodic maintenance

The maintenance items listed under periodic maintenance are required to be serviced at regular intervals.

However, under severe driving conditions, additional or more frequent maintenance is required.

Where to go for service

If maintenance service is required or your vehicle appears to malfunction, have the systems checked and tuned by an authorized NISSAN dealer.

NISSAN technicians are well-trained specialists who are kept up-to-date with the latest service information through technical bulletins, service tips, and in-dealership training programs. They are completely qualified to work on NISSAN vehicles **before** they work on your vehicle, rather than after they have worked on it.

You can be confident that an authorized NISSAN dealer's service department performs the best job to meet the maintenance requirements on your vehicle — in a reliable and economic way.

GENERAL MAINTENANCE

During the normal day-to-day operation of the vehicle, general maintenance should be performed regularly as prescribed in this section. If you detect any unusual sounds, vibrations or smells, be sure to check for the cause or have an authorized NISSAN dealer do it promptly. In addition, you should notify an authorized NISSAN dealer if you think repairs are required.

When performing any checks or maintenance work, closely observe the precautions in the ''Do-it-yourself'' section of this manual.

EXPLANATION OF MAINTENANCE ITEMS

Additional information on the items marked with an ''*'' can be found in the ''Do-it-yourself'' section of this manual.

EXTERIOR MAINTENANCE

Outside the vehicle

The maintenance items listed here should be performed from time to time, unless otherwise specified.

Tires* — Check the pressure with a gauge periodically when at a service station, in-

cluding the spare, and adjust to the specified pressure if necessary. Check carefully for damage, cuts or excessive wear.

Wheel nuts* — When checking the tires, make sure no wheel nuts are missing, and check for any loose wheel nuts. Tighten if necessary.

Tire rotation* — Tires should be rotated every 7,500 miles (12,000 km).

Wheel alignment and balance — If the vehicle should pull to either side while driving on a straight and level road, or if you detect uneven or abnormal tire wear, there may be a need for a wheel alignment.

If the steering wheel or seat vibrates at normal highway speeds, wheel balancing may be needed.

Windshield wiper blades* — Check for cracks or wear if they do not wipe properly.

Doors and engine hood — Check that all doors and the hood operate properly. Also ensure all latches lock securely. Lubricate hinges, latches, rollers and links if necessary. Make sure the secondary latch keeps the hood from opening when the primary latch is released.

When driving in areas using road salt or other corrosive materials, check lubrication frequently.

Lights* — Make sure the headlights, stop lights, tail lights, turn signal lights, and other lights are all operating properly and installed securely. Also check headlight aim.

INTERIOR MAINTENANCE

The maintenance items listed here should be checked on a regular basis, such as when performing periodic maintenance, cleaning the vehicle, etc.

Additional information on the following items with an ''*'' is found in the ''Do-it-yourself'' section of this manual.

Warning lights and chimes — Make sure all warning lights and buzzers/chimes are operating properly.

Windshield wiper and washer* — Check that the wipers and washer operate properly and that the wipers do not streak.

Windshield defroster — Check that the air comes out of the defroster outlets properly and in sufficient quantity when operating the heater or air conditioner.

Steering wheel — Check for changes in the steering conditions, such as excessive freeplay, hard steering or strange noises.

Seats — Check seat position controls such as seat adjusters, seatback recliner, etc. to ensure they operate smoothly and all latches lock securely in every position. Check that the head restraints move up and down smoothly and the locks (if so equipped) hold securely in all latched positions.

Seat belts — Check that all parts of the seat belt system (for example, buckles, anchors, adjusters and retractors) operate properly and smoothly, and are installed securely. Check the belt webbing for cuts, fraying, wear or damage.

Accelerator pedal — Check the pedal for smooth operation and make sure the pedal does not catch or require uneven effort. Keep the floor mat away from the pedal.

Clutch pedal* — Make sure the pedal operates smoothly and check that it has the proper free travel.

Brakes — Check that the brakes do not pull the vehicle to one side when applied.

Brake pedal and booster* — Check the pedal for smooth operation and make sure it has the proper distance under it when depressed fully. Check the brake booster function. Be certain to keep the floor mat away from the pedal.

Parking brake* — Check that the lever has the proper travel and confirm that your vehicle is held securely on a fairly steep hill with only the parking brake applied.

Automatic transmission P position mechanism — On a fairly steep hill check that your vehicle is held securely with the shift selector lever in the P (Park) position without applying any brakes.

Under the hood and vehicle

The maintenance items listed here should be checked periodically, such as each time you check the engine oil or refuel.

Additional information on the items marked with an "*" can be found in the "Do-it-yourself'' section of this manual.

Windshield washer fluid* — Check that there is adequate fluid in the tank.

Engine oil level* — Check the level after parking the vehicle on a level surface, with the engine off. Wait a few minutes for the oil to drain back into the oil pan.

Brake and (if so equipped) clutch fluid levels* — Make sure that the brake and clutch fluid level are between the MIN and MAX lines on each reservoir.

Power steering fluid level* and lines — Check the level when the fluid is cold and with the engine off. Check the lines for proper attachment, leaks, cracks, etc.

Automatic transmission fluid level* — Check the level after putting the shift selector lever in P (Park) with the engine idling at operating temperature.

Engine coolant level* — Check the coolant level when the engine is cold.

Radiator and hoses — Check the front of the radiator and clean off any dirt, insects, leaves, etc., that may have accumulated. Make sure the hoses have no cracks, deformation, rot or loose connections.

Engine drive belts* — Make sure the drive belts are not frayed, worn, cracked or oily.

Battery* — Check the fluid level in each cell. It should be between the MAX and MIN lines.

Exhaust system — Make sure there are no cracks, holes, loose joints or supports. If the sound of the exhaust seems unusual or there is a smell of exhaust fumes, immediately have the exhaust system inspected by a qualified individual. (See the carbon monoxide warning in the ''Starting and driving'' section of this manual.)

Underbody — The underbody is frequently exposed to corrosive substances such as those used on icy roads or to control dust. It is very important to remove these substances from the underbody, otherwise rust may form on the floor pan, frame, fuel linesand exhaust system. At the end of winter, the underbody should be thoroughly flushed with plain water, especially those areas where mud and dirt may accumulate. See the ''Appearance and care'' section for additional information.

Fluid leaks — Check under the vehicle for fuel, oil, water or other fluid leaks after the vehicle has been parked for a while. Water dripping from the air conditioner after use is normal. If you should notice any leaks or if gasoline fumes are evident, check for the cause and have it corrected immediately by an authorized NISSAN dealer.

PERIODIC MAINTENANCE SCHEDULES

To ensure smooth, trouble-free, safe and economical driving, NISSAN provides two periodic maintenance schedules that may be used, depending upon the conditions in which you usually drive. These schedules contain both distance and time intervals, up to 60,000 miles (96,000 km)/48 months. For most people, the odometer reading indicates when service is needed. However, if you drive very little, your vehicle should be serviced at the regular time intervals shown in the schedules. **After 60,000 miles (96,000 km)/48 months, continue periodic maintenance at the same mileage/time intervals.**

SCHEDULE 1

Follow Periodic Maintenance Schedule 1 if your driving habits frequently include one or more of the following driving conditions:

- **Repeated short trips of less than 5 miles (8 km).**
- **Repeated short trips of less than 10 miles (16 km) with outside temperatures below freezing.**
- **Operating the vehicle in hot weather during in stop-and-go ‘‘rush hour’’ traffic.**
- **Extensive idling and/or low speed driving for long distances, such as police, taxi or door-to-door delivery use.**
- **Driving in dusty conditions.**
- **Driving on rough, muddy, or salt spread roads.**
- **Towing a trailer, using a camper or a car-top carrier.**

SCHEDULE 2

Follow Periodic Maintenance Schedule 2 if none of the driving conditions shown in Schedule 1 apply to your driving habits.

Schedule 1

Abbreviations: R = Replace I = Inspect. Correct or replace if necessary. [ ]: At the mileage intervals only

MAINTENANCE OPERATION		MAINTENANCE INTERVAL															
Perform at number of miles, kilometers or months, whichever comes first.	Miles x 1,000	3.75	7.5	11.25	15	18.75	22.5	26.25	30	33.75	37.5	41.25	45	48.75	52.5	56.25	60
	(km x 1,000)	(6)	(12)	(18)	(24)	(30)	(36)	(42)	(48)	(54)	(60)	(66)	(72)	(78)	(84)	(90)	(96)
	Months	3	6	9	12	15	18	21	24	27	30	33	36	39	42	45	48
Emission control system maintenance																	
Drive belts	See NOTE (1)																I*
Air cleaner filter	See NOTE (2)								[R]								[R]
EVAP vapor lines									I*								I*
Fuel lines									I*								I*
Fuel filter	See NOTE (3)*																
Engine coolant	See NOTE (4)																R*
Engine oil		R	R	R	R	R	R	R	R	R	R	R	R	R	R	R	R
Engine oil filter		R	R	R	R	R	R	R	R	R	R	R	R	R	R	R	R
Spark plugs (Use PLATINUM-TIPPED type)		Replace every 105,000 miles (169,000 km)															
Intake & exhaust valve clearance	See NOTE (5)*																

NOTE: (1) After 60,000 miles (96,000 km) or 48 months, inspect every 15,000 miles (24,000 km) or 12 months.
(2) If operating mainly in dusty conditions, more frequent maintenance may be required.
(3) When the filter becomes clogged, the vehicle speed cannot be increased as the driver wishes. In such an event, replace the filter.
(4) After 60,000 miles (96,000 km) or 48 months, replace every 30,000 miles (48,000 km) or 24 months.
(5) If valve noise increases, inspect valve clearance.
*** Maintenance items and intervals marked with an "*" are recommended by NISSAN for reliable vehicle operation. The owner need not perform such maintenance in order to maintain the emission warranty or manufacturer recall liability. Other maintenance items and intervals are required.**

Schedule 1

Abbreviations: I = Inspect. Correct or replace if necessary.

MAINTENANCE OPERATION		MAINTENANCE INTERVAL							
Perform at number of miles, kilometers or months, whichever comes first.	Miles x 1,000	7.5	15	22.5	30	37.5	45	52.5	60
	(km x 1,000)	(12)	(24)	(36)	(48)	(60)	(72)	(84)	(96)
	Months	6	12	18	24	30	36	42	48
Chassis and body maintenance									
Brake lines & cables			I		I		I		I
Brake pads, rotors, drums & linings		I	I	I	I	I	I	I	I
Manual transmission oil & automatic transmission fluid	See NOTE (2)		I		I		I		I
Steering gear & linkage, axle & suspension parts		I	I	I	I	I	I	I	I
Tire rotation	See NOTE (3)								
Exhaust system		I	I	I	I	I	I	I	I
Drive shaft boots		I	I	I	I	I	I	I	I
Supplemental front and side air bag system	See NOTE (1)								
Automatic speed control device (ASCD) vacuum hoses			I		I		I		I

NOTE: (1) Inspect the supplemental air bag system 10 years after the date of manufacture noted on the FMVSS certification label.
(2) If towing a trailer, using a camper or a car-top carrier, or driving on rough or muddy roads, change (not just inspect) oil at every 30,000 miles (48,000 km) or 24 months.
(3) Refer to ‘‘Tire rotation’’ under the ‘‘General Maintenance’’ heading earlier in this section.

Schedule 2

Abbreviations: R = Replace I = Inspect. Correct or replace if necessary. [ ]: At the mileage intervals only

MAINTENANCE OPERATION		MAINTENANCE INTERVAL							
Perform at number of miles, kilometers or months, whichever comes first.	Miles x 1,000	7.5	15	22.5	30	37.5	45	52.5	60
	(km x 1,000)	(12)	(24)	(36)	(48)	(60)	(72)	(84)	(96)
	Months	6	12	18	24	30	36	42	48
Emission control system maintenance									
Drive belts	See NOTE (1)								I*
Air cleaner filter					[R]				[R]
EVAP vapor lines					I*				I*
Fuel lines					I*				I*
Fuel filter	See NOTE (2)*								
Engine coolant	See NOTE (3)								R*
Engine oil		R	R	R	R	R	R	R	R
Engine oil filter		R	R	R	R	R	R	R	R
Spark plugs (Use PLATINUM-TIPPED type)		Replace every 105,000 miles (169,000 km)							
Intake & exhaust valve clearance	See NOTE (4)*								

NOTE: (1) After 60,000 miles (96,000 km) or 48 months, inspect every 15,000 miles (24,000 km) or 12 months.
(2) When the filter becomes clogged, the vehicle speed cannot be increased as the driver wishes. In such an event, replace the filter.
(3) After 60,000 miles (96,000 km) or 48 months, replace every 30,000 miles (48,000 km) or 24 months.
(4) If valve noise increases, inspect valve clearance.
*** Maintenance items and intervals marked with an "*" are recommended by NISSAN for reliable vehicle operation. The owner need not perform such maintenance in order to maintain the emission warranty or manufacturer recall liability. Other maintenance items and intervals are required.**

Schedule 2

Abbreviations: I = Inspect. Correct or replace if necessary.

MAINTENANCE OPERATION		MAINTENANCE INTERVAL							
Perform at number of miles, kilometers or months, whichever comes first.	Miles x 1,000	7.5	15	22.5	30	37.5	45	52.5	60
	(km x 1,000)	(12)	(24)	(36)	(48)	(60)	(72)	(84)	(96)
	Months	6	12	18	24	30	36	42	48
Chassis and body maintenance									
Brake lines & cables			I		I		I		I
Brake pads, rotors, drums & linings			I		I		I		I
Manual transmission oil & automatic transmission fluid			I		I		I		I
Steering gear & linkage, axle & suspension parts					I				I
Tire rotation	See NOTE (2)								
Exhaust system					I				I
Drive shaft boots			I		I		I		I
Supplemental front and side air bag system	See NOTE (1)								
Automatic speed control device (ASCD) vacuum hoses			I		I		I		I

NOTE: (1) Inspect the supplemental air bag system 10 years after the date of manufacture noted on the FMVSS certification label.
(2) Refer to "Tire rotation" under the "General Maintenance" heading earlier in this section.

EXPLANATION OF MAINTENANCE ITEMS

Additional information on the following items marked with an ''*'' is found in the ''Do-it- yourself'' section of this manual.

Emission control system maintenance

Drive belts* — Check drive belts for wear, fraying or cracking and also for proper tension. Replace any damaged drive belts.

Air cleaner filter — Under normal driving conditions, the air cleaner filter should be replaced in accordance with the maintenance schedule. However, driving the vehicle in dusty areas may cause rapid clogging of the element. Consequently, the element may have to be replaced more frequently.

EVAP vapor lines — Check vapor lines and connections for leaks, looseness or deterioration. If leaks are found, replace them.

Fuel lines — Check the fuel hoses, piping and connections for leaks, looseness or deterioration. Replace any damaged parts.

Fuel filter — If the vehicle is operated under extremely adverse weather conditions or in areas where ambient temperatures are either extremely low or extremely high, the filter might become clogged. In such an event, replace the filter immediately.

Engine coolant* — Drain and flush the cooling system.

Engine oil & oil filter* — Under normal driving conditions, the engine oil and oil filter should be replaced in accordance with the maintenance schedule. However, under severe driving conditions, they may have to be replaced more frequently.

Spark plugs* — Replace with new plugs having the correct heat range.

Intake & exhaust valve clearance — Check the valve clearance if valve noise increases.

Chassis and body maintenance

Brake lines & cables — Check the brake lines and hoses (including brake booster vacuum hoses, connections & check valve) and parking brake cables for proper attachment, leaks, cracks, chafing, abrasion, deterioration, etc.

Brake pads, rotors, drums & linings — Check these and the other neighboring brake components for wear, deterioration and leaks. Under severe driving conditions, they may have to be inspected more frequently.

Manual & automatic transmission fluid* — Check the fluid level and visually inspect for signs of leakage.

Under severe driving conditions, the fluid should be replaced at the specified interval.

Steering gear & linkage, axle & suspension parts, and drive shaft boots — Check for damage, looseness and leakage of oil or grease. Under severe driving conditions, inspection should be performed more frequently.

Exhaust system — Visually check the exhaust pipes, muffler, and hangers for proper attachment, leaks, cracks, chafing, abrasion, deterioration, etc. Under severe driving conditions, inspection should be performed more frequently.

Supplemental air bag, and supplemental side air bag (if so equipped) systems — Check the supplemental air bag system(s) components for proper attachment, damage, deformities, cracks, rust, etc. Work around and on the supplemental air bag system(s) should be done by an authorized NISSAN dealer.

Automatic speed control device (ASCD) vacuum hoses — Check vacuum hose between ASCD actuator and ASCD pump for breakage, cracks or fractures.

MEMO

10 Technical and consumer information

Capacities and recommended fuel/lubricants.....10-2
Fuel recommendation.....10-3
Engine oil and oil filter recommendation.....10-5
Recommended SAE viscosity number.....10-6
Air conditioner system refrigerant and lubricant recommendations 10-7
Specifications 10-8
Engine 10-8
Wheels and tires.....10-9
Dimensions and weights 10-9
When traveling or registering your vehicle in another country 10-10
Vehicle identification 10-10
Vehicle identification number (VIN) plate.....10-10
Vehicle identification number (chassis number).....10-10
Engine serial number 10-11
F.M.V.S.S. certification label 10-11
Emission control information label 10-12
Tire placard.....10-12
Air conditioner specification label.....10-12
Installing front license plate.....10-13
Vehicle loading information 10-13
Terms.....10-13
Determining vehicle load capacity.....10-14
Loading tips 10-14
Towing a trailer.....10-15
Maximum load limits.....10-15
Towing load/specification chart 10-16
Towing safety 10-16
Uniform tire quality grading.....10-18
Emission control system warranty 10-19
Reporting safety defects (US only).....10-19
Readiness for inspection/maintenance (I/M) test (US only) 10-20
Owner’s manual/service manual order information.....10-21
In the event of a collision 10-22

CAPACITIES AND RECOMMENDED FUEL/ LUBRICANTS

The following are approximate capacities. The actual refill capacities may be a little different. When refilling, follow the procedure described in the ''Do-it-yourself'' section to determine the proper refill capacity.

	Capacity (Approximate)			Recommended Fluids and Lubricants
	US measure	Imp measure	Liter	
Fuel	15-7/8 gal	13-1/4 gal	60	Unleaded gasoline with an octane rating of at least 87 AKI (RON 91)*1
Engine oil *7				● API Certification Mark *2 *3 ● API grade SG/SH, Energy Conserving I & II or API grade SJ, Energy Conserving *2 *3 ● ILSAC grade GF-1 & GF-II *2 *3
Drain and refill				
With oil filter change	3-5/8 qt	3 qt	3.4	
Without oil filter change	3-3/8 qt	2-7/8 qt	3.2	
Cooling system				
With reservoir	7-3/8 qt	6-1/8 qt	7.0	50% Genuine NISSAN Anti-freeze coolant or equivalent
Reservoir	5/8 qt	1/2 qt	0.6	50% Soft tap water
Manual transaxle gear oil	9-1/2 to 10-1/8 pt	7-7/8 to 8-1/2 pt	4.5 to 4.8	API GL-4, Viscosity SAE 80W-90 only
Automatic transaxle fluid	10 qt	8-1/4 qt	9.4	Nissan Matic 'D' (Continental U.S. and Alaska) or Canada NISSAN Automatic Transmission Fluid . *4
Power steering fluid	1 qt	3/4 qt	0.9	Genuine NISSAN PSF II or equivalent. *8
Brake and clutch fluid	Refill to the proper level according to the instructions in the ''Do-it-yourself'' section.			Genuine Nissan Brake Fluid*5 or equivalent DOT 3 (US FMVSS No. 116)
Multi-purpose grease	—	—	—	NLGI No. 2 (Lithium soap base)
Air conditioning system refrigerant	—	—	—	HFC-134a (R-134a)*6
Air conditioning system lubricant	—	—	—	Nissan A/C System Oil Type R or exact equivalent*6

*1: For further details, see ''Fuel recommendation.''
*2: For further details, see ''Engine oil and oil filter recomendations.''
*3: For further details, see ''Recommended SAE engine oil viscosity.''
*4: Dexron™ III/Mercon™ or equivalent may also be used. Outside the Continental United States and Alaska contact a NISSAN dealership for more information regarding suitable fluids, including recommended brand(s) of Dexron™ III/Mercon™ Automatic Transmission Fluid.
*5: Available in mainland USA through your NISSAN dealer.
*6: For further details, see ''Air conditioner specification label.''
*7: For further details, see ''Changing engine oil.''
*8: Genuine NISSAN PSF, Canada NISSAN Automatic Transmission Fluid, Dexron™ III/Mercon™, or equivalent ATF may also be used.

FUEL RECOMMENDATION

Your vehicle is designed to operate on unleaded gasoline with an octane rating of at least 87 AKI (Anti-Knock Index) (Research octane number 91).

⚠ CAUTION

- **Using a fuel other than that specified could adversely affect the emission control system, and may also affect warranty coverage.**
- **Under no circumstances should a leaded gasoline be used since this will damage the three way catalyst.**

Reformulated gasoline

Some fuel suppliers are now producing reformulated gasolines. These gasolines are specially designed to reduce vehicle emissions. NISSAN supports efforts towards cleaner air and suggests that you use reformulated gasoline when available.

Gasoline containing oxygenates

Some fuel suppliers sell gasoline containing oxygenates such as ethanol, MTBE and methanol with or without advertising their presence. Nissan does not recommend the use of fuels of which the oxygenate content and the fuel compatibility for your NISSAN cannot be readily determined. If in doubt, ask your service station manager.

If you use oxygenate-blend gasoline, please take the following precautions as the usage of such fuels may cause vehicle performance problems and/or fuel system damage.

- **The fuel should be unleaded and have an octane rating no lower than that recommended for unleaded gasoline.**
- **If an oxygenate-blend other than a methanol blend is used, it should contain no more than 10% oxygenate. (MTBE may, however, be added up to 15%.)**
- **If a methanol blend is used, it should contain no more than 5% methanol (methyl alcohol, wood alcohol). It should also contain a suitable amount of appropriate cosolvents and corrosion inhibitors. If not properly formulated with appropriate cosolvents and corrosion inhibitors, such methanol blends may cause fuel system damage and/or vehicle performance problems. At this time, sufficient data is not available to ensure that all methanol blends are suitable for use in NISSAN vehicles.**

If any driveability problems such as engine stalling and difficult hot-starting are experienced after using oxygenate-blend fuels, immediately change to a non-oxygenate fuel or a fuel with a low blend of MTBE.

Take care not to spill gasoline during refueling. Gasoline containing oxygenates can cause paint damage.

Aftermarket fuel additives

NISSAN does not recommend the use of any fuel additives (i.e.: fuel injector cleaner, octane booster, intake valve deposit removers, etc.) which are sold commercially. Many of these additives intended for gum, varnish or deposit removal may contain active solvents or similar ingredients that can be harmful to the fuel system and engine.

Octane rating tips

In most parts of North America, you should use unleaded gasoline with an octane rating

of at least 87 AKI (Anti-Knock Index) number. However, you may use unleaded gasoline with an octane rating as low as 85 AKI (Anti-Knock Index) number in high altitude areas [over 4,000 ft (1,219 m)] such as: Colorado, Montana, New Mexico, Utah, Wyoming, northeastern Nevada, southern Idaho, western South Dakota, western Nebraska, and the part of Texas which is directly south of New Mexico.

Using unleaded gasoline with an octane rating lower than stated above can cause persistent, heavy ‘‘spark knock.’’ (‘‘Spark knock’’ is a metallic rapping noise.) If severe, this can lead to engine damage. If you detect a persistent heavy spark knock even when using gasoline of the stated octane rating, or if you hear steady spark knock while holding a steady speed on level roads, have an authorized dealer correct the condition. Failure to correct the condition is misuse of the vehicle, for which NISSAN is not responsible.

Incorrect ignition timing may result in spark knock, after-run or overheating, which may cause excessive fuel consumption or engine damage. If any of the above symptoms are encountered, have your vehicle checked at an authorized NISSAN dealer or other competent service facility.

However, now and then you may notice light spark knock for a short time while accelerating or driving up hills. This is no cause for concern, because you get the greatest fuel benefit when there is light spark knock for a short time under heavy engine load.

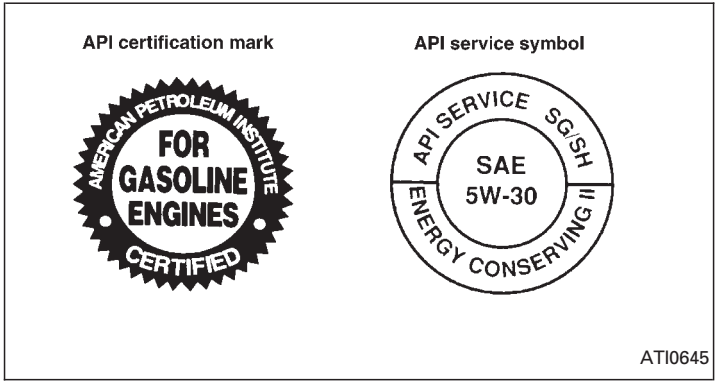

ENGINE OIL AND OIL FILTER RECOMMENDATION

Selecting the correct oil

It is essential to choose engine oil with the correct quality and viscosity oil to ensure satisfactory engine life and performance. NISSAN recommends the use of a low friction oil (energy conserving oil) in order to improve fuel economy and conserve energy. Oils which do not have the specified quality label should not be used as they could cause engine damage.

Only those engine oils with the American Petroleum Institute (API) CERTIFICATION MARK on the front of the container should be used. This type of oil supersedes the existing API SG, SH, or SJ and Energy Conserving I & II categories.

If you cannot find engine oil with the API CERTIFICATION MARK, use an API grade SG/SH, Energy Conserving II or API grade SJ, Energy Conserving oil. An oil with a single designation SG or SH, or in combination with other categories (for example, SG/CC or SG/CD) may also be used if one with the API CERTIFICATION MARK cannot be found. An ILSAC grade GF-I & GF-II oil can also be used.

Mineral based or synthetic type oils may be used in your NISSAN vehicle. These oils must however, meet the API quality and SAE viscosity ratings specified for your vehicle. Do not mix mineral based and synthetic type oils in the engine.

Oil additives

NISSAN does not recommend the use of oil additives. The use of an oil additive is not necessary when the proper oil type is used and maintenance intervals are followed.

Oil which may contain foreign matter or has been previously used should not be used.

Oil viscosity

The engine oil viscosity or thickness changes with temperature. Because of this, it is important that the engine oil viscosity be selected based on the temperatures at which the vehicle will be operated before the next oil change. The chart ‘‘Recommended SAE viscosity number’’ shows the recommended oil viscosities for the expected ambient temperatures. Choosing an oil viscosity other than that recommended could cause serious engine damage.

Selecting the correct oil filter

Your new NISSAN vehicle is equipped with a high- quality genuine NISSAN oil filter. When replacing, use a genuine NISSAN oil filter or its equivalent for the reason described in ‘‘Change intervals’’.

Change intervals

The oil and oil filter change intervals for your engine are based on the use of the specified quality oils and filters. Oil and filter other than the specified quality, or oil and filter change intervals longer than recommended could reduce engine life. Damage to the engine caused by improper maintenance or use of incorrect oil and filter quality and/or viscosity is not covered by the new NISSAN vehicle warranties.

Your engine was filled with a high quality engine oil when it was built. You do not have to change the oil before the first recommended change interval. Oil and filter change intervals depend upon how you use your vehicle. Operation under the following conditions may require more frequent oil and filter changes:

— repeated short distance driving at cold outside temperatures,

— driving in dusty conditions,

— extensive idling,

— towing a trailer.

RECOMMENDED SAE VISCOSITY NUMBER

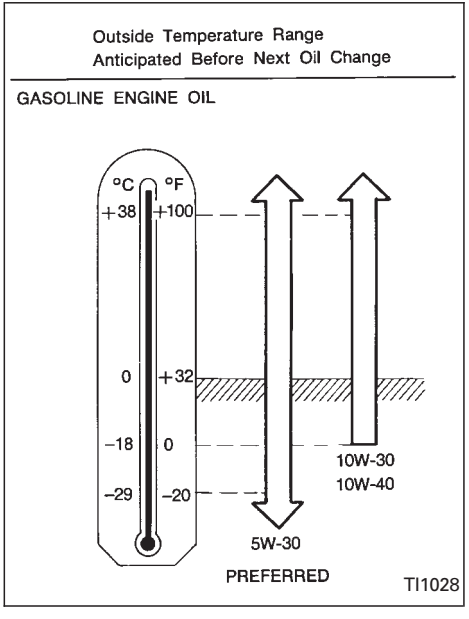

- **SAE 5W-30 viscosity oil is preferred for all temperatures. SAE 10W-30 or 10W-40 viscosity oil may be used if**

the ambient temperature is above 0°F (-18°C).

AIR CONDITIONER SYSTEM REFRIGERANT AND LUBRICANT RECOMMENDATIONS

The air conditioner system in this NISSAN vehicle must be charged with the refrigerant HFC-134a (R-134a) and the lubricant, NISSAN A/C system oil Type R or the exact equivalents.

⚠ CAUTION

The use of any other refrigerant or lubricant will cause severe damage to the air conditioning system and will require the replacement of all air conditioner system components.

The refrigerant HFC-134a (R-134a) in your NISSAN vehicle does not harm the earth's ozone layer. Although this refrigerant does not affect the earth's atmosphere, certain government regulations require the recovery and recycling of any refrigerant during automotive air conditioner system service. An authorized NISSAN dealer has the trained technicians and equipment needed to recover and recycle your air conditioner system refrigerant.

Contact an authorized NISSAN dealer when servicing your air conditioner system.

ENGINE

Model		KA24DE
Type		Gasoline, 4-cycle, DOHC
Cylinder arrangement		4-cylinder, in-line
Bore x Stroke	in (mm)	3.504 x 3.780 (89.0 x 96.0)
Displacement	cu in (cm^3)	145.7 (2,389)
Firing order		1-3-4-2
Idle speed	rpm	
M/T		700 ± 50
A/T (in "N" position)		700 ± 50
Ignition timing (degree B.T.D.C. at idle speed)		20° ± 2°
CO % at idle		Idle mixture screw is preset and sealed at factory
Spark plug		PFR5G-11 (Standard) PFR6G-11 (Cold) PFR7G-11 (Cold)
Spark plug gap (Nominal)	in (mm)	0.043 (1.1)
Camshaft operation		Timing Chain
Generator belt size		
Width x Length	in (mm)	0.8409 x 52.56 (21.36 x 1,335)

The spark ignition system of this vehicle meets all requirements of the Canadian Interference - Causing Equipment Regulations.

WHEELS AND TIRES

		Conventional	T type (Spare)
Road wheel			
Steel	XE, GXE	15 x 6JJ	15 x 4T
Aluminum	SE, GLE, GXE(1)	16 x 6JJ	15 x 4T
Offset in (mm)		1.77 (45)	1.57 (40)
Tire size	XE, GXE	P195/65R15T	
	GXE	P205/60R15T	
	GXE, GLE	P205/55R16T	T125/70D15
	SE	P205/55R16H	

(1) if so equipped

DIMENSIONS AND WEIGHTS

Overall length	in (mm)	185.7 (4,717)
Overall width	in (mm)	69.1 (1,754)
Overall height	in (mm)	55.9 (1,420)
Front tread	in (mm)	59.3 (1,505)
Rear tread	in (mm)	58.9 (1,495)
Wheelbase	in (mm)	103.1 (2,620)
Gross vehicle weight rating	lb (kg)	See the ''F.M.V.S.S. certification label'' on the driver side, center door pillar.
Gross axle weight rating		
Front	lb (kg)	
Rear	lb (kg)	

WHEN TRAVELING OR REGISTERING YOUR VEHICLE IN ANOTHER COUNTRY

When planning to travel in another country, you should first find out if the fuel available is suitable for your vehicle's engine.

Using fuel with an octane rating that is too low may cause engine damage. All gasoline vehicles must be operated with unleaded gasoline. Therefore, avoid taking your vehicle to areas where appropriate fuel is not available.

When transferring the registration of your vehicle to another country, state, province or district, it may be necessary to modify the vehicle to meet local laws and regulations.

The laws and regulations for motor vehicle emission control and safety standards vary according to the country, state, province or district; therefore, vehicle specifications may differ.

When any vehicle is to be taken into another country, state, province or district and registered, its modifications, transportation, and registration are the responsibility of the user. NISSAN is not responsible for any inconvenience that may result.

VEHICLE IDENTIFICATION

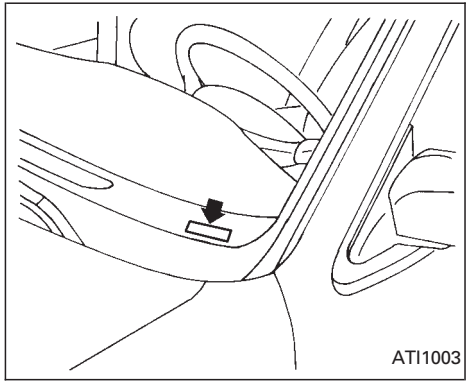

VEHICLE IDENTIFICATION NUMBER (VIN) PLATE

The vehicle identification number plate is attached as shown. This number is the identification for your vehicle and is used in the vehicle registration.

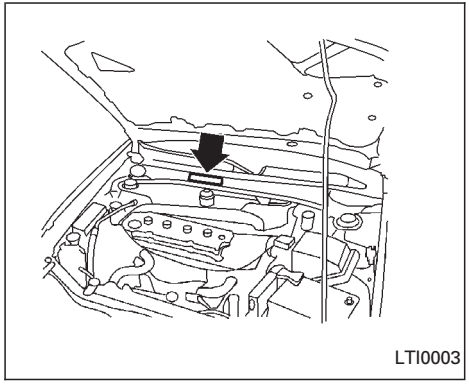

VEHICLE IDENTIFICATION NUMBER (Chassis number)

The number is stamped as shown.

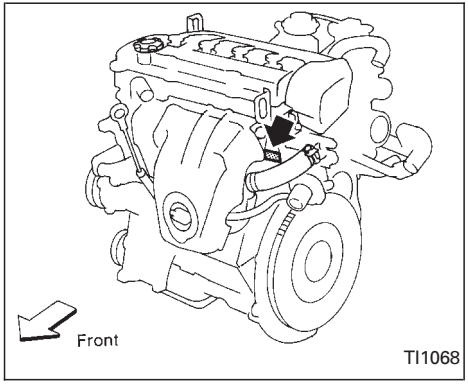

ENGINE SERIAL NUMBER

The number is stamped on the engine as shown.

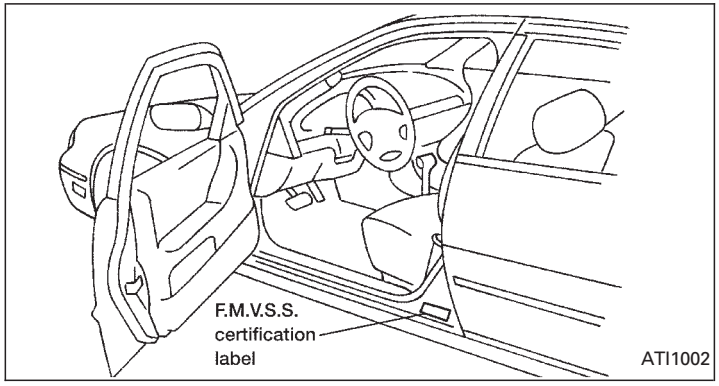

F.M.V.S.S. CERTIFICATION LABEL

The Federal Motor Vehicle Safety Standards (F.M.V.S.S.) certification label is affixed as shown. This label contains valuable vehicle information, such as: Gross Vehicle Weight Ratings (GVWR), Gross Axle Weight Rating (GAWR), month and year of manufacture, Vehicle Identification Number, (VIN), etc. Review it carefully.

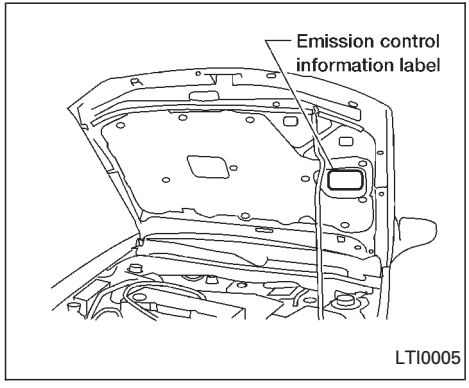

EMISSION CONTROL INFORMATION LABEL

The emission control information label is attached as shown.

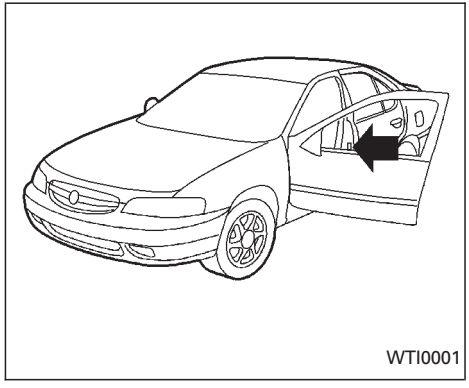

TIRE PLACARD

The cold tire pressure is shown on the tire placard, affixed to the driver's door, center pillar.

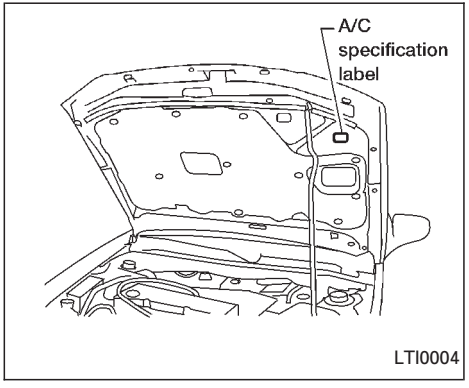

AIR CONDITIONER SPECIFICATION LABEL

The air conditioner specification label is affixed as shown.

INSTALLING FRONT LICENSE PLATE

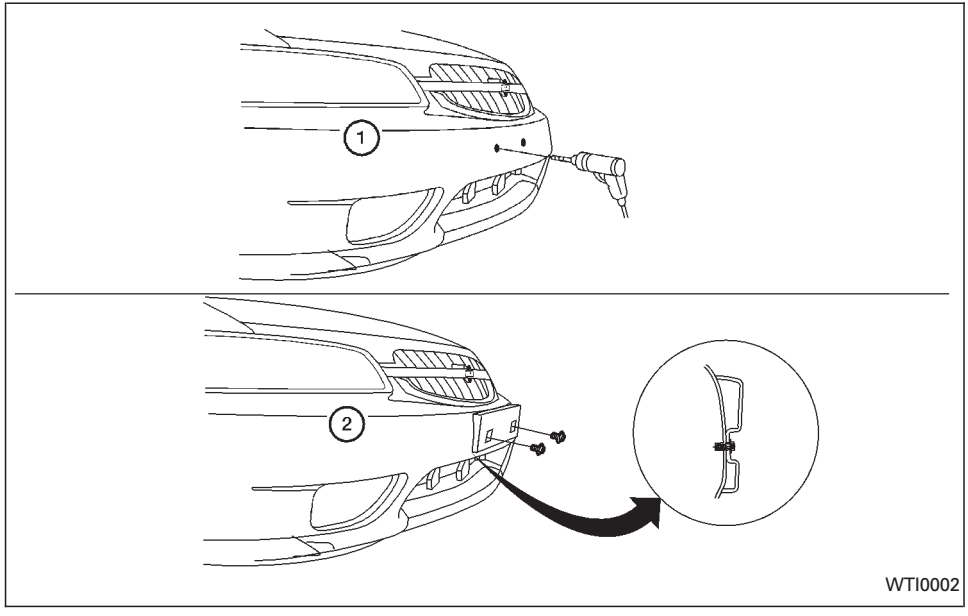

Use the following steps to mount the license plate:

1. Make a hole in each plastic finisher at the location mark (small dimple) using a 0.31 in (8 mm) drill. To avoid damaging the threads behind the finisher, apply only light pressure to the drill.
2. Mount the license plate bracket using two of the four **8 mm slotted hex head screws.**
3. Use the remaining two **8 mm slotted hex head screws** to mount the license plate to the license plate bracket.

VEHICLE LOADING INFORMATION

WARNING

- **It is extremely dangerous to ride in a cargo area inside the vehicle. In a collision, people riding in these areas are more likely to be seriously injured or killed.**
- **Do not allow people to ride in any area of the vehicle that is not equipped with seats and seat belts.**
- **Be sure everyone in the vehicle is in a seat with their seat belt properly fastened.**

TERMS

It is important to familiarize yourself with the following terms before loading your vehicle:

- Curb Weight (actual weight of your vehicle) - vehicle weight including: standard and optional equipment, fluids, emergency tools, and spare tire assembly. This weight **does not** include passengers and cargo.
- GVW (Gross Vehicle Weight) - curb weight plus the combined weight of passengers and cargo.
- GVWR (Gross Vehicle Weight Rating) -

maximum total weight (load) limit specified for the vehicle.

- GAWR (Gross Axle Weight Rating) - maximum weight (load) limit specified for the front or rear axle.

DETERMINING VEHICLE LOAD CAPACITY

The load capacity of this vehicle is determined by weight, not by available cargo space. For example, a luggage rack, bike carrier, cartop carrier or similar equipment does not increase load carrying capacity of your vehicle.

To determine vehicle load capacity:

Vehicle weight can be determined by using a commercial-grade scale, found at places such as a truck stop, gravel quarry, grain elevator, or a scrap metal recycling facility.

1) Determine the curb weight of your vehicle.
2) Compare the curb weight amount to the GVWR specified for your vehicle to determine how much more weight your vehicle can carry.
3) After loading (cargo and passengers), re-weigh your vehicle to determine if either GVWR or GAWR for your vehicle is exceeded. If GVWR is exceeded, remove cargo as necessary. If either the front or rear GAWR is exceeded, shift the load or remove cargo as necessary.

LOADING TIPS

- The GVW must not exceed GVWR or GAWR as specified on the FMVSS Certification Label.
- Do not load the front and rear axle to the GAWR. Doing so will exceed the GVWR.

⚠ WARNING

- **Properly secure all cargo to help prevent it from sliding or shifting. Do not place cargo higher than the seatbacks. In a sudden stop or collision, unsecured cargo could cause personal injury.**
- **Do not load your vehicle any heavier than the GVWR or the maximum front and rear GAWRs. If you do, parts of your vehicle can break, or it can change the way your vehicle handles. This could result in loss of control and cause personal injury.**
- **Overloading can shorten the life of the vehicle. Failures caused by overloading are not covered by the vehicle's warranty.**

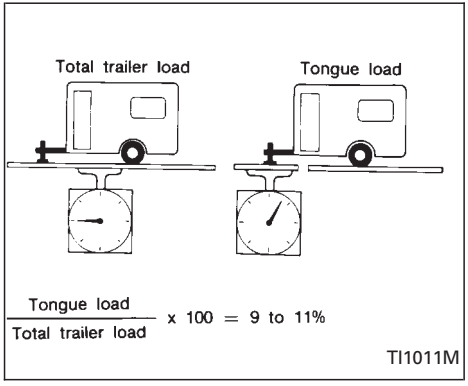

Your new vehicle was designed to be used primarily to carry passengers and cargo. Remember that towing a trailer will place additional loads on your vehicle's engine, drive train, steering, braking and other systems.

A Nissan Trailer Towing Guide (U.S. only) containing information on trailer towing ability and the special equipment required may be obtained from an authorized NISSAN dealer.

MAXIMUM LOAD LIMITS

Maximum trailer loads:

Never allow the total trailer load to exceed 1,000 lb (454 kg). The total trailer load equals trailer weight plus its cargo weight. Towing loads greater than 1,000 lb (454 kg) or using improper towing equipment could adversely affect vehicle handling, braking and performance.

The ability of your vehicle to tow a trailer is not only related to the maximum trailer loads, but also the places you plan to tow. Tow weights appropriate for level highway driving may have to be reduced on very steep grades or in low traction situations (for example, on slippery boat ramps).

⚠ WARNING

Vehicle damage and/or personal injury resulting from improper towing procedures are not covered by NISSAN warranties. A NISSAN Trailer Towing Guide (U.S. only) containing information on trailer towing ability and the special equipment required may be obtained from an authorized NISSAN dealer.

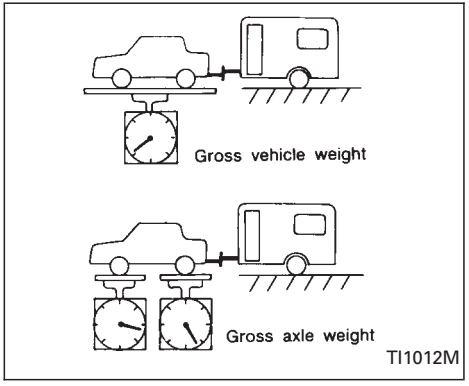

Tongue load:

Keep the tongue load between 9 and 11% of the total trailer load. If the tongue load becomes excessive, rearrange cargo to allow for proper tongue load.

Maximum gross vehicle weight/ maximum gross axle weight:

The gross vehicle weight of the towing vehicle must not exceed the gross vehicle weight rating (GVWR) shown on the F.M.V.S.S. certification label. The gross vehicle weight equals the combined weight of the unloaded vehicle, passengers, luggage,

hitch, trailer tongue load and any other optional equipment. In addition, front or rear gross axle weight must not exceed the gross axle weight rating (GAWR) shown on the F.M.V.S.S. certification label.

TOWING LOAD/SPECIFICATION CHART

	UNIT: lb (kg)
MAXIMUM TOWING LOAD	1,000 (454)
MAXIMUM TONGUE LOAD	110 (49)

TOWING SAFETY

Trailer hitch

Choose a proper hitch for your vehicle and trailer. A genuine NISSAN trailer hitch is available from your NISSAN dealer (Canada only). Make sure the trailer hitch is securely attached to the vehicle, to help avoid personal injury or property damage due to sway caused by crosswinds, rough road surfaces or passing trucks.

CAUTION

- **Do not use axle-mounted hitches.**
- **The hitch should not be attached to or affect the operation of the impact-absorbing bumper.**
- **Do not modify the vehicle exhaust system, brake system, etc. to install a trailer hitch.**
- **To reduce the possibility of additional damage if your vehicle is struck from the rear, where practical, remove the hitch and/or receiver when not in use.**
- **After the hitch is removed, seal the bolt holes to prevent exhaust fumes, water or dust from entering the passenger compartment.**
- **Regularly check that all hitch mounting bolts are securely mounted.**

Tire pressures

- When towing a trailer, inflate the vehicle tires to the recommended cold tire pressure indicated on the tire placard (affixed to the driver's door, center pillar).
- Trailer tire condition, size, load rating and proper inflation pressure should be in accordance with the trailer and tire manufacturer's specifications.

Safety chains

Always use suitable chains between your vehicle and the trailer. Safety chains should be crossed and should be attached to the hitch, not to the vehicle bumper or axle. Be sure to leave enough slack in the chains to permit turning corners.

Trailer lights

Trailer lights should comply with federal and/ or local regulations. When wiring the vehicle for towing, connect the stop and tail light pickup into the vehicle electrical circuit.

Trailer brakes

If your trailer is equipped with a braking system, make sure it conforms to Federal and/or local regulations and that it is properly installed.

⚠ WARNING

Never connect a trailer brake system directly to the vehicle brake system.

Pre-towing tips

- Be certain your vehicle maintains a level position when a loaded and/or unloaded trailer is hitched. Do not drive the vehicle if it has an abnormal nose-up or nose- down condition; check for improper tongue load, overload, worn suspension or other possible causes of either condition.
- Always secure items in the trailer to prevent load shift while driving.
- Be certain your rear view mirrors conform to all federal, state or local regulations. If not, install any mirrors required for towing before driving the vehicle.

Trailer towing tips

In order to gain skill and an understanding of the vehicle's behavior, you should practice turning, stopping and backing up in an area which is free from traffic. Steering stability and braking performance will be somewhat different than under normal driving conditions.

- Always secure items in the trailer to prevent load shift while driving.
- Avoid abrupt starts, acceleration or stops.
- Avoid sharp turns or lane changes.
- Always drive your vehicle at a moderate speed.
- Always block the wheels on both vehicle and trailer when parking. Parking on a slope is not recommended; however, if you must do so, and if your vehicle is equipped with an automatic transmission, first block the wheels and apply the parking brake, and then move the shift lever into the P position. If you move the shift lever to the P position before blocking the wheels and applying the parking brake, transmission damage could occur.
- When going down a hill, shift into a lower gear and use the engine braking effect. When ascending a long grade, downshift the transmission to a lower gear and reduce speed to reduce chances of engine overloading and/or overheating.
- If the engine coolant rises to an extremely high temperature when the air conditioner system is on, turn off the air conditioner. Coolant heat can be additionally vented by opening the windows, switching the fan control to high and setting the temperature control to the HOT position.
- Trailer towing requires more fuel than normal circumstances.
- Avoid towing a trailer for the first 500 miles (800 km).
- Have your vehicle serviced more often than at intervals specified in the recommended Maintenance Schedule.
- When making a turn, your trailer wheels will be closer to the inside of the turn than your vehicle wheels. To compensate for this, make a larger than normal turning radius during the turn.
- Crosswinds and rough roads will adversely affect vehicle/trailer handling, possibly causing vehicle sway. When being passed by larger vehicles, be prepared for possible changes in crosswinds that could affect vehicle handling. If swaying does occur, firmly grip the steering wheel, steer straight ahead, and immediately (but gradually) reduce vehicle

speed. This combination will help stabilize the vehicle. Never increase speed.

- Be careful when passing other vehicles. Passing while towing a trailer requires considerably more distance than normal passing. Remember the length of the trailer must also pass the other vehicle before you can safely change lanes.
- To maintain engine braking efficiency and electrical charging performance, do not use fifth gear (manual transmission) or overdrive (automatic transmission).
- Avoid holding the brake pedal down too long or too frequently. This could cause the brakes to overheat, resulting in reduced braking efficiency.

When towing a trailer, change the transmission fluid more frequently. For additional information see the ''Maintenance'' section earlier in this manual.

UNIFORM TIRE QUALITY GRADING

DOT (Department of Transportation) Quality Grades: All passenger car tires must conform to federal safety requirements in addition to these grades.

Quality grades can be found where applicable on the tire sidewall between tread shoulder and maximum section width. For example:

Treadwear 200 Traction AA Temperature A

Treadwear

Treadwear grade is a comparative rating based on tire wear rate when tested under controlled conditions on specified government test courses. For example, a tire graded 150 would wear one and a half (1-1/2) times as well on the government course as a tire graded 100. However, relative tire performance depends on actual driving conditions, and may vary significantly due to variations in driving habits, service practices and differences in road characteristics and climate.

Traction AA, A, B and C

The traction grades, from highest to lowest, are AA, A, B, and C. Those grades represent the tire's ability to stop on wet pavement as measured under controlled conditions on specified government test surfaces of asphalt and concrete. A tire marked C may have poor traction performance.

WARNING

The traction grade assigned to your vehicle tires is based on straight-ahead braking traction tests and does not include acceleration, cornering, hydroplaning, or peak traction characteristics.

Temperature A, B and C

Temperature grades are A (the highest), B, and C. They represent a tire's resistance to heat build-up, and its ability to dissipate heat when tested under controlled conditions on a specified indoor laboratory test wheel. Sustained high temperature can cause tire material to degenerate, reducing tire life. Excessive temperatures can lead to sudden tire failure. Grade C corresponds to a performance level which all passenger car tires must meet under the Federal Motor Vehicle Safety Standard No. 109. Grades A and B represent higher levels of performance on laboratory test wheels than the minimum required by law.

⚠ WARNING

The temperature grade for this tire is established for a tire that is properly inflated and not overloaded. Excessive speed, underinflation, or excessive loading, either separately or in combination, can cause heat buildup and possible tire failure.

EMISSION CONTROL SYSTEM WARRANTY

Your NISSAN vehicle is covered by the following emission warranties:

For US

1) Emission Defects Warranty

2) Emissions Performance Warranty

For Canada

Emission Control System Warranty

Details of these warranties may be found with other vehicle warranties in your Warranty and Roadside Assistance Information Booklet that comes with your NISSAN vehicle. If you did not receive a Warranty and Roadside Assistance Information Booklet, or it is lost, you may obtain a replacement by writing to:

- Nissan North America Inc.
  Consumer Affairs Department
  P.O. Box 191
  Gardena, CA 90248-0191
- Nissan Canada Inc.
  5290 Orbitor Drive
  Mississauga, Ontario, L4W 4Z5

REPORTING SAFETY DEFECTS (US only)

If you believe that your vehicle has a defect which could cause a crash or could cause injury or death, you should immediately inform the National Highway Traffic Safety Administration (NHTSA) in addition to notifying NISSAN.

If NHTSA receives similar complaints, it may open an investigation, and if it finds that a safety defect exists in a group of vehicles, it may order a recall and remedy campaign. However, NHTSA cannot become involved in individual problems between you, your dealer, or NISSAN.

To contact NHTSA, you may either call the Auto Safety Hotline toll-free at 1-800-424-9393 (or 366-0123 in Washington, D.C. area) or write to: NHTSA, U.S. Department of Transportation, Washington, D.C. 20590. You can also obtain other information about motor vehicle safety from the Hotline.

You may notify NISSAN by contacting our Consumer Affairs Department, toll-free, at 1-800-NISSAN-1.

In Hawaii call (808) 836-0888.

READINESS FOR INSPECTION/MAINTENANCE (I/M) TEST (US only)

Due to legal requirements in some states and Canadian Provinces, your vehicle may be required to be in what is called the ‘‘ready condition’’ for an Inspection/Maintenance (I/M) test of the emission control system.

The vehicle is set to the ‘‘ready condition’’ when it is driven through certain driving patterns. Usually, the ready condition can be obtained by ordinary usage of the vehicle.

If a powertrain system component is repaired or the battery is disconnected, the vehicle may be reset to a ‘‘not ready’’ condition. Before taking the I/M test, drive the vehicle through the following pattern to set the vehicle to the ready condition. If you cannot or do not want to perform the driving pattern, a NISSAN dealer can conduct it for you.

WARNING

Always drive the vehicle in a safe and prudent manner according to traffic conditions and obey all traffic laws.

1. Start the engine when the engine coolant temperature gauge needle points to C. Allow the engine to idle until the gauge needle points between the C and H (normal operating temperature).
2. Accelerate the vehicle to 55 mph (88 km/h), then quickly release the accelerator pedal completely and keep it released for at least 6 seconds.
3. Quickly depress the accelerator pedal for a moment, then drive the vehicle at a speed of 53 to 60 mph (86 to 96 km/h) for at least 5 minutes.
4. Stop the vehicle.
5. Accelerate the vehicle to 35 mph (55 km/h) and maintain the speed for 20 seconds.
6. Repeat steps four through five at least three times.
7. Accelerate the vehicle to 55 mph (88 km/h) and maintain the speed for at least 3 minutes.
8. Stop the vehicle (shift lever in the ‘‘P’’ or ‘‘N’’ position).
9. Rev the engine up between 2,500 and 3,500 rpm and hold it for 3 consecutive minutes, then release the accelerator pedal completely.
10. Wait 5 seconds at idle.
11. Rev the engine up between 2,000 and 3,000 rpm and maintain it for 5 consecutive minutes.
12. Stop the vehicle and turn the engine off.
13. Repeat steps one through twelve at least one more time.

If step one through seven is interrupted, repeat the preceding step. Any safe driving mode is acceptable between steps. Do not stop the engine until step seven is completed.

Genuine Nissan Service Manuals

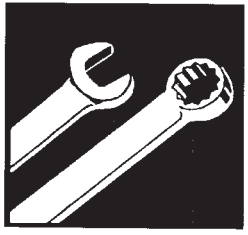

GET THE INSIDE STORY

OWNER'S MANUAL/SERVICE MANUAL ORDER INFORMATION

A genuine NISSAN Service Manual is the best source of service and repair information for your vehicle. Filled with wiring diagrams, illustrations and step-by-step diagnostic and adjustment procedures, this manual is the same one used by the factory trained technicians working at authorized NISSAN dealerships. Also available are genuine NISSAN Owner's Manuals, and genuine NISSAN Service and Owner's Manuals for older NISSAN models.

In the USA:

For current pricing and availability of genuine **NISSAN Service Manuals** for the 2000 model year and later, contact:

Tweddle Litho Company
1-800-639-8841
www.nissan-techinfo.com

For current pricing and availability of genuine **NISSAN Service Manuals** for the 1999 model year and prior, see an authorized NISSAN dealer, or contact:

Dyment Distribution Services
20770 Westwood Road
Strongsville OH 44136
1-800-247-5321

For current pricing and availability of genuine **NISSAN Owner's Manuals** for the 2001 model year and prior, see an authorized NISSAN dealer, or contact:

Dyment Distribution Services
20770 Westwood Road
Strongsville OH 44136
1-800-247-5321

In Canada:

To purchase a copy of a Genuine NISSAN Service Manual or Owner's Manual please contact your nearest NISSAN Dealer. For the phone number and location of a NISSAN Dealer in your area call the NISSAN Satisfaction Center at 1-800-387-0122 and a bilingual NISSAN representative will assist you.

Also available are Genuine NISSAN Service and Owner's Manuals for older NISSAN models.

IN THE EVENT OF A COLLISION

Unfortunately, accidents do occur. In this unlikely event, there is some important information you should know.

Many insurance companies routinely authorize the use of non-genuine collision parts in order to cut costs, among other reasons.

Insist on the use of Genuine Nissan/Infiniti Collision Parts!

If you want your vehicle to be restored using parts made to Nissan's/Infiniti's original exacting specifications − if you want to help it to last and hold its resale value, the solution is simple. ***Tell your insurance agent and your repair shop to only use Genuine Nissan/Infiniti Collision Parts.*** Nissan does not warrant non-Nissan parts, nor does Nissan's warranty apply to damage caused by a non-genuine part.

Using Genuine Nissan/Infiniti Parts can help protect your personal safety, preserve your warranty protection and maintain the resale value of your vehicle. And if your vehicle was leased, using Genuine Nissan/Infiniti Parts may prevent or limit unnecessary excess wear and tear expenses at the end of your lease.

Nissan/Infiniti designs its hoods with crumple zones to minimize the risk that the hood will penetrate the windshield of your vehicle in an accident. Non-genuine (imitation) parts may not provide such built in safeguards. Also, non-genuine parts often show premature wear, rust and corrosion.

Why should you take a chance?

In over 40 states, the law says you must be advised if non-genuine parts are used to repair your vehicle. And some states have enacted laws that restrict insurance companies from authorizing the use of non-genuine collision parts during the new vehicle warranty. These laws help protect you, so you can take action to protect yourself.

It's your right!

If you should need further information visit us at: *www.nissandriven.com.*

11 Index

A

Air bag (See supplemental restraint system) 1-8
Air bag warning light 1-14, 1-19, 2-7
Air cleaner housing filter 8-17
Air conditioner
- Air conditioner operation 4-5
- Air conditioner service 4-9
- Air conditioner specification label 10-12
- Air conditioner system refrigerant and lubrication recommendations 10-7
- Heater and air conditioner controls 4-3
- Servicing air conditioner 4-9

Air flow charts 4-6
Alarm system (See vehicle security system) 2-10
Anchor point locations 1-34
Antenna 4-37
Anti-lock brake system (ABS) 5-18
Anti-lock brake warning light 2-8
Armrests 1-7
Ashtray (See cigarette lighter and ashtray) 2-20
Audio system
- FM-AM radio with cassette player and compact disc (CD) player 4-17
- FM-AM radio with compact disc (CD) changer 4-24
- FM-AM radio with compact disc (CD) player 4-10

Automatic
- Automatic power window switch 2-26
- Automatic transmission fluid (ATF) 8-11
- Driving with automatic transmission 5-4

B

Battery 8-14
Battery
- Charge warning light 2-7

Battery replacement (See multi-remote control system) 3-8
Before starting the engine 5-6
Belts (See drive belts) 10-8, 8-15
Brake
- Anti-lock brake system (ABS) 5-18
- Brake booster 8-20
- Brake fluid 8-12
- Brake light (See stop light) 8-34
- Brake pedal 8-19
- Brake system 5-17
- Brake warning light 2-7
- Brake wear indicators 2-9, 8-20
- Parking brake check 8-19
- Parking brake operation 5-12
- Self-adjusting brakes 8-20

Break-in schedule 5-15
Bulb check/instrument panel 2-6
Bulb replacement 8-31

C

Capacities and recommended fuel/lubricants 10-2
Car phone or CB radio 4-37
Cargo (See vehicle loading information) 10-13
Check engine indicator light (See malfunction indicator light) 2-9
Child restraint with top tether strap 1-34
Child restraints 1-22, 1-28
Child safety rear door lock 3-5
Cigarette lighter (accessory) and ashtray 2-20
Cleaning exterior and interior 7-2
Clock 4-12, 4-19
Clutch
- Clutch fluid 8-13
- Clutch pedal 8-21

Cold weather driving 5-19
Controls
- Heater and air conditioner controls 4-3

Coolant
Capacities and recommended fuel/ lubricants 10-2
Changing engine coolant..... 8-6
Checking engine coolant level 8-5
Engine coolant temperature gauge 2-4
Cornering light 2-18
Corrosion protection 7-5
Cruise control..... 5-13
Cup holders 2-22

D

Daytime running light system (Canada only) 2-17
Defogger switch
Rear window defogger switch 2-15
Dimensions and weights..... 10-9
Door locks..... 3-2
Door open warning light 2-7
Drive belts..... 8-15
Driving
Cold weather driving..... 5-19
Driving with automatic transmission..... 5-4
Driving with manual transmission..... 5-5
Precautions when starting and driving ... 5-2

E

Economy - fuel..... 5-15
Emission control information label..... 10-12
Emission control system warranty..... 10-19
Engine
Before starting the engine 5-6
Capacities and recommended fuel/ lubricants 10-2
Changing engine coolant..... 8-6
Changing engine oil..... 8-9
Changing engine oil filter..... 8-10
Checking engine coolant level 8-5
Checking engine oil level 8-8
Engine compartment check locations 8-4
Engine coolant temperature gauge 2-4
Engine cooling system 8-5
Engine oil..... 8-8
Engine oil and oil filter recommendation 10-5
Engine oil pressure warning light 2-6
Engine oil viscosity 10-5
Engine serial number 10-11
Engine specifications..... 10-8
Starting the engine 5-7
Exhaust gas (Carbon monoxide)..... 5-2
Explanation of maintenance items 9-2

F

Flashers (See hazard warning flasher switch)..... 2-18
Flat tire..... 6-2
Floor mat positioning aid 7-5
Fluid
Automatic transmission fluid (ATF) 8-11
Brake fluid..... 8-12
Capacities and recommended fuel/ lubricants 10-2
Clutch fluid..... 8-13
Engine coolant..... 8-5
Engine oil..... 8-8
Power steering fluid..... 8-12
Window washer fluid 8-13
F.M.V.S.S. certification label 10-11
Front fog light switch 2-18
Front seats..... 1-2
Fuel
Capacities and recommended fuel/ lubricants 10-2
Fuel economy 5-15
Fuel filler cap 3-12
Fuel filler lid lock opener lever 3-12
Fuel gauge..... 2-4
Fuel octane rating..... 10-3
Fuel recommendation..... 10-3
Fuses 8-21
Fusible links 8-21

G

Gauge
Engine coolant temperature gauge 2-4
Fuel gauge..... 2-4
Odometer..... 2-3
Speedometer 2-3
Tachometer..... 2-4
Trip odometer 2-3

General maintenance 9-2
Glasses case 2-21
Glove box..... 2-23
Glove box lock 2-23

H

Hazard warning flasher switch 2-18
Head restraints 1-8
Headlight and turn signal switch 2-16
Heater
  Heater and air conditioner controls 4-3
  Heater operation 4-4
Homelink Transceiver
  Integrated HomeLink® Universal Transceiver (If so equipped) 2-29
Hood release 3-9
Horn 2-19

I

Ignition switch 5-4
Immobilizer system 2-12, 3-2, 5-6
Important vehicle information label..... 10-11
Increasing fuel economy..... 5-15
Indicator lights and chimes (See warning/indicator lights and chimes)..... 2-6
Inside mirror..... 3-15
Instrument brightness control 2-17
Integrated HomeLink® Universal Transceiver (If so equipped)..... 2-29
Interior light 2-28
Interior trunk lid release..... 3-11

J

Jump starting..... 6-8, 8-15

K

Key..... 3-2
Keyless entry system (See multi-remote control system) 3-5

L

Labels
  Air conditioner specification label..... 10-12
  Emission control information label..... 10-12
  Engine serial number 10-11
  F.M.V.S.S. certification label 10-11
  Vehicle identification number (VIN) plate 10-10
  Warning labels (for SRS) 1-18
License plate
  Installing the license plate 10-13
Light
  Air bag warning light..... 1-14, 1-19, 2-7
  Brake light (See stop light)..... 8-34
  Bulb check/instrument panel 2-6
  Bulb replacement..... 8-31
  Charge warning light 2-7
  Cornering light 2-18
  Front fog light switch 2-18
  Headlight and turn signal switch 2-16
  Interior light..... 2-28
  Low washer fluid warning light 2-7
  Spotlights (See map light)..... 2-28
  Trunk light..... 2-29
  Warning/indicator lights and chimes 2-6
Lock
  Child safety rear door lock 3-5
  Door locks..... 3-2
  Fuel filler lid lock opener lever 3-12
  Glove box lock..... 2-23
  Power door locks..... 3-3
  Trunk lid lock opener lever..... 3-10

M

Maintenance
  General maintenance 9-2
  Inside the vehicle..... 9-3
  Maintenance precautions 8-2
  Outside the vehicle..... 9-2
  Periodic maintenance schedules..... 9-5
  Seat belt maintenance..... 1-27
  Under the hood and vehicle 9-4
Malfunction indicator lamp (MIL) 2-9
Map lights 2-28
Map pocket 2-21
Meters and gauges..... 2-2
Mirror
  Inside mirror..... 3-15

Outside mirror control 3-15
Vanity mirror 3-14
Multi-remote control system 3-5
Multi-remote controller battery replacement 8-23

N

Nissan vehicle immobilizer system (NVIS) 2-10, 3-2, 5-6

O

Octane rating (See fuel octane rating) 10-3
Odometer 2-3
Oil
Capacities and recommended fuel/ lubricants 10-2
Changing engine oil 8-9
Changing engine oil filter 8-10
Checking engine oil level 8-8
Engine oil 8-8
Engine oil and oil filter recommendation 10-5
Engine oil viscosity 10-5
Outside mirror control 3-15
Overdrive switch 5-10
Overheat
If your vehicle overheats 6-10
Owner's manual/service manual order information 10-21

P

Parking
Parking brake check 8-19
Parking brake operation 5-12
Parking/parking on hills 5-16
Periodic maintenance schedules 9-5
Power
Power door locks 3-3
Power socket 2-19
Power steering fluid 8-12
Power steering system 5-17
Power windows 2-25
Precautions
Maintenance precautions 8-2
Precautions on seat belt usage 1-20
Precautions when starting and driving ... 5-2
Push starting 6-10

R

Radio
Car phone or CB radio 4-37
FM-AM radio with cassette player and compact disc (CD) player 4-17
FM-AM radio with compact disc (CD) changer 4-24
FM-AM radio with compact disc (CD) player 4-10
Readiness for inspection maintenance (I/M) test 10-20
Rear seat 1-6
Rear window defogger switch 2-15
Refrigerant recommendation 10-7
Registering your vehicle in another country 10-10
Remote keyless entry system (See multi-remote control system) 3-5
Reporting safety defects (USA) 10-19

S

Safety
Child safety rear door lock 3-5
Reporting safety defects (USA) 10-19
Seat adjustment
Front manual seat adjustment 1-3
Front power seat adjustment 1-4
Seat belt
Precautions on seat belt usage 1-20
Seat belt extenders 1-27
Seat belt maintenance 1-27
Seat belts 1-20
Shoulder belt height adjustment 1-26
Three-point type with retractor 1-23
Seat belt warning light 2-7
Seats
Front seats 1-2
Rear seat 1-6
Self-adjusting brakes 8-20
Servicing air conditioner 4-9
Shifting
Automatic transmission 5-9
Manual transmission 5-11

Shoulder belt height adjustment 1-26
Spark plug replacement 8-16
Speedometer 2-3
Spotlights (See map light) 2-28
SRS warning label 1-18
Starting
  Before starting the engine 5-6
  Jump starting 6-8, 8-15
  Precautions when starting and driving ... 5-2
  Push starting 6-10
  Starting the engine 5-7
Steering
  Power steering fluid 8-12
  Power steering system 5-17
  Tilting steering wheel 3-14
Stop light 8-34
Storage 2-21
Sunroof 2-26
Supplemental restraint system
  Information and warning labels 1-18
Supplemental restraint system
(Supplemental air bag system) 1-8
Switch
  Automatic power window switch 2-26
  Front fog light switch 2-18
  Hazard warning flasher switch 2-18
  Headlight and turn signal switch 2-16
  Ignition switch 5-4
  Overdrive switch 5-10
  Rear window defogger switch 2-15
  Windshield wiper and washer switch ... 2-14

T

Tachometer 2-4
Three-way catalyst 5-2
Tilting steering wheel 3-14
Tire
  Flat tire 6-2
  Spare tire 6-7, 8-38
  Tire chains 8-36
  Tire placard 10-12
  Tire pressure 10-16, 8-35
  Tire rotation 8-36
  Types of tires 8-35
  Uniform tire quality grading 10-18
  Wheels and tires 8-35
  Wheel/tire size 10-9
Towing
  Tow truck towing 6-11
  Towing load/specification chart 10-16
  Trailer towing 10-15
Transmission
  Automatic transmission fluid (ATF) 8-11
  Driving with automatic transmission 5-4
  Driving with manual transmission 5-5
Travel (See registering your vehicle in
another country) 10-10
Trip odometer 2-3
Trunk access through the rear seat 1-6
Trunk lid lock opener lever 3-10
Trunk light 2-29
Trunk side net 2-25
Turn signal switch (See headlight and turn
signal switch) 2-16, 2-17

U

Uniform tire quality grading 10-18

V

Vanity mirror 3-14
Vehicle dimensions and weights 10-9
Vehicle identification 10-10
Vehicle identification number (VIN)
(chassis number) 10-10
Vehicle identification number (VIN)
plate 10-10
Vehicle loading information 10-13
Vehicle recovery 6-13
Vehicle security system 2-12
Ventilators 4-2

W

Warning
  Air bag warning light 1-14, 1-19, 2-7
  Hazard warning flasher switch 2-18
  Vehicle security system 2-12
  Warning labels (for SRS) 1-18
  Warning/indicator lights and chimes 2-6
Weights (See dimensions and weights) 10-9
Wheels and tires 8-35

Wheel/tire size 10-9
When traveling or registering your vehicle in another country..... 10-10
Window washer fluid..... 8-13
Windows
Locking passengers' windows..... 2-26
Power windows..... 2-25
Windshield wiper and washer switch 2-14
Wiper
Windshield wiper and washer switch ... 2-14
Wiper blades..... 8-18

Recommended fuel:

Unleaded gasoline, at least 87 AKI number (RON 91).

For further details such as gasohol, see ‘‘Fuel recommendation’’ in the ‘‘Technical and consumer information’’ section.

Recommended engine oil:

- API Certification Mark
- API grade SG/SH Energy Conserving I & II or API grade SJ Energy Conserving
- ILSAC grade GF-1 & GF-II

See ‘‘Engine oil and oil filter recommendation’’ in the ‘‘Technical and consumer information’’ section.

Tire cold pressure:

See the tire placard affixed to the driver’s door center pillar.

Recommended new vehicle break-in procedure:
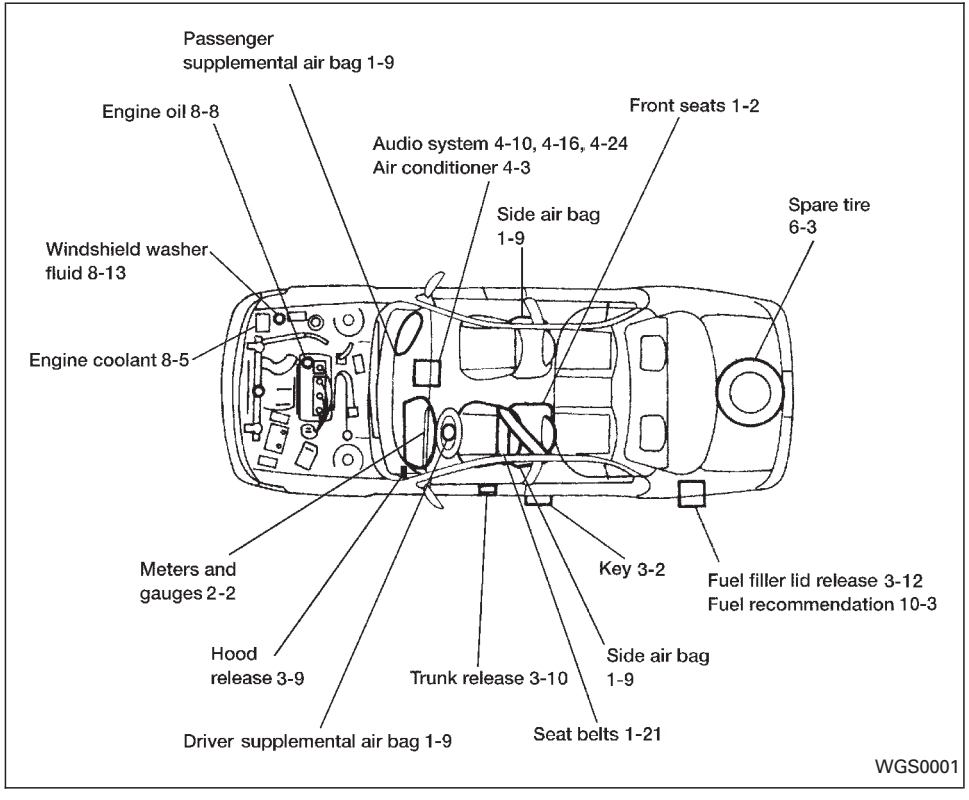
During the first 1,000 miles (1,600 km) of vehicle use, follow the recommendations outlined in the “BREAK-IN SCHEDULE Information found in the “Starting and Driving” section of this Owner’s Manual. Follow these recommendations for the future reliability and economy of your new vehicle. Failure to follow these recommendations may result in vehicle damage or shortened engine life.