2009 cube

OWNER'S MANUAL

For your safety, read carefully and keep in this vehicle.

Foreword

Welcome to the growing family of new NISSAN owners. This vehicle is delivered to you with confidence. It was produced using the latest techniques and strict quality control.

This manual was prepared to help you understand the operation and maintenance of your vehicle so that you may enjoy many miles of driving pleasure. Please read through this manual before operating your vehicle.

A separate Warranty Information Booklet explains details about the warranties covering your vehicle. The NISSAN Service and Maintenance Guide explains details about maintaining and servicing your vehicle. Additionally, a separate Customer Care/Lemon Law Booklet (U.S. only) will explain how to resolve any concerns you may have with your vehicle, as well as clarify your rights under your state's lemon law.

Your NISSAN dealer knows your vehicle best. When you require any service or have any questions, we will be glad to assist you with the extensive resources available to us.

READ FIRST — THEN DRIVE SAFELY

Before driving your vehicle, read your Owner's Manual carefully. This will ensure familiarity with controls and maintenance requirements, assisting you in the safe operation of your vehicle.

WARNING

IMPORTANT SAFETY INFORMATION REMINDERS FOR SAFETY!

Follow these important driving rules to help ensure a safe and comfortable trip for you and your passengers!

- **NEVER drive under the influence of alcohol or drugs.**
- **ALWAYS observe posted speed limits and never drive too fast for conditions.**
- **ALWAYS give your full attention to driving and avoid using vehicle features or taking other actions that could distract you.**
- **ALWAYS use your seat belts and appropriate child restraint systems. Pre-teen children should be seated in the rear seat.**
- **ALWAYS provide information about the proper use of vehicle safety features to all occupants of the vehicle.**
- **ALWAYS review this Owner's Manual for important safety information.**

MODIFICATION OF YOUR VEHICLE

This vehicle should not be modified. Modification could affect its performance, safety or durability, and may even violate governmental regulations. In addition, damage or performance problems resulting from modification may not be covered under NISSAN warranties.

WHEN READING THE MANUAL

This manual includes information for all options available on this model. Therefore, you may find some information that does not apply to your vehicle.

All information, specifications and illustrations in this manual are those in effect at the time of printing. NISSAN reserves the right to change specifications or design at any time without notice.

IMPORTANT INFORMATION ABOUT THIS MANUAL

You will see various symbols in this manual. They are used in the following ways:

WARNING

This is used to indicate the presence of a hazard that could cause death or serious personal injury. To avoid or reduce the risk, the procedures must be followed precisely.

CAUTION

This is used to indicate the presence of a hazard that could cause minor or moderate personal injury or damage to your vehicle. To avoid or reduce the risk, the procedures must be followed carefully.

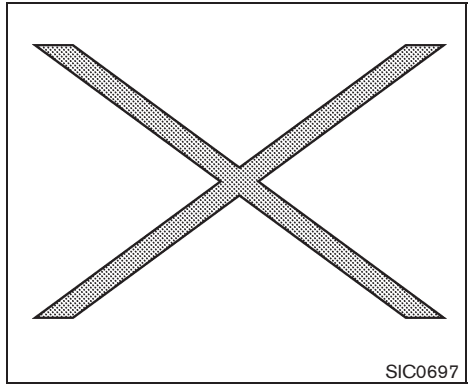

If you see the symbol above, it means **"Do not do this"** or **"Do not let this happen"**.

If you see a symbol similar to those above in an illustration, it means the arrow points to the front of the vehicle.

Arrows in an illustration that are similar to those above indicate movement or action.

Arrows in an illustration that are similar to those above call attention to an item in the illustration.

CALIFORNIA PROPOSITION 65 WARNING

WARNING

Engine exhaust, some of its constituents, and certain vehicle components contain or emit chemicals known to the State of California to cause cancer and birth defects or other reproductive harm. In addition, certain fluids contained in vehicles and certain products of component wear contain or emit chemicals known to the State of California to cause cancer and birth defects or other reproductive harm.

CALIFORNIA PERCHLORATE ADVISORY

Some vehicle parts, such as lithium batteries, may contain perchlorate material. The following advisory is provided: "Perchlorate Material - special handling may apply, See www.dtsc.ca.gov/hazardouswaste/perchlorate."

BLUETOOTH® is a trademark owned by Bluetooth SIG, Inc., U.S.A.

XM Radio® requires subscription, sold separately after first 90 days. Not available in Alaska, Hawaii or Guam. For more information, visit www.xmradio.com.

© 2009 NISSAN MOTOR CO., LTD.

All rights reserved. No part of this Owner's Manual may be reproduced or stored in a retrieval system, or transmitted in any form, or by any means, electronic, mechanical, photocopying, recording or otherwise, without the prior written permission of Nissan Motor Co., Ltd.

NISSAN CUSTOMER CARE PROGRAM

NISSAN CARES ...

Both NISSAN and your NISSAN dealer are dedicated to serving all your automotive needs. Your satisfaction with your vehicle and your NISSAN dealer are our primary concerns. Your NISSAN dealer is always available to assist you with all your automobile sales and service needs.

However, if there is something that your NISSAN dealer cannot assist you with or you would like to provide NISSAN directly with comments or questions, please contact the NISSAN Consumer Affairs Department using our toll-free number:

For U.S. customers
1-800-NISSAN-1
(1-800-647-7261)
For Canadian customers
1-800-387-0122

The Consumer Affairs Department will ask for the following information:

— Your name, address, and telephone number

— Vehicle identification number (attached to the top of the instrument panel on the driver's side)

— Date of purchase

— Current odometer reading

— Your NISSAN dealer's name

— Your comments or questions

OR

You can write to NISSAN with the information at:

For U.S. customers
Nissan North America, Inc.
Consumer Affairs Department
P.O. Box 685003
Franklin, TN 37068-5003

For Canadian customers
Nissan Canada Inc.
5290 Orbitor Drive
Mississauga, Ontario L4W 4Z5

We appreciate your interest in NISSAN and thank you for buying a quality NISSAN vehicle.

Table of Contents

Illustrated table of contents	0
Safety — Seats, seat belts and supplemental restraint system	1
Instruments and controls	2
Pre-driving checks and adjustments	3
Heater, air conditioner, audio and phone systems	4
Starting and driving	5
In case of emergency	6
Appearance and care	7
Maintenance and do-it-yourself	8
Technical and consumer information	9
Index	10

0 Illustrated table of contents

Seats, seat belts and Supplemental Restraint System (SRS) 0-2
Exterior front 0-3
Exterior rear 0-4
Exterior (Krōm models) 0-5
Passenger compartment 0-6
Cockpit 0-7
Instrument panel 0-8
Meters and gauges 0-9
Engine compartment 0-10
MR18DE engine 0-10

SEATS, SEAT BELTS AND SUPPLEMENTAL RESTRAINT SYSTEM (SRS)

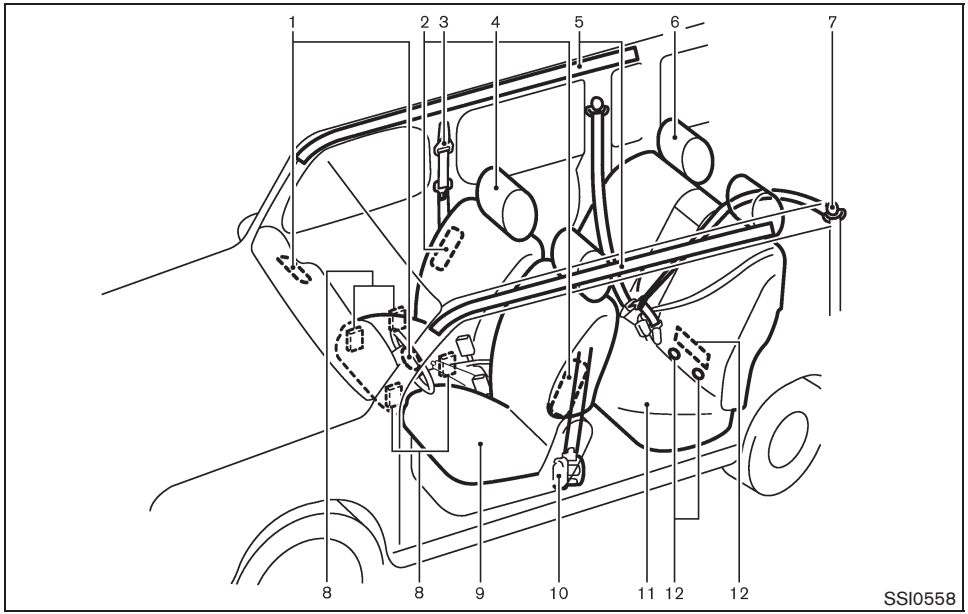

1. Supplemental front-impact air bags (Page 1-40)
2. Front seat-mounted side-impact supplemental air bags (P.1-40)
3. Seat belts (P.1-8)
4. Head restraints (P.1-6)
   — Front-seat Active Head Restraints (P.1-7)
5. Roof-mounted curtain side-impact supplemental air bags (P.1-40)
6. Rear headrest* (P.1-7)
7. Rear center seat belt* (P.1-16)
8. Occupant classification sensors (weight sensors)
   — Advanced Air Bag System (P.1-46)
9. Front seats (P.1-3)
10. Seat belt with pretensioner (P.1-52)
11. Rear seats* (P.1-4)
    — Child restraints (P.1-19)
12. LATCH (Lower Anchors and Tethers for CHildren) system* (P.1-20)

*: except for Cargo Van models

EXTERIOR FRONT

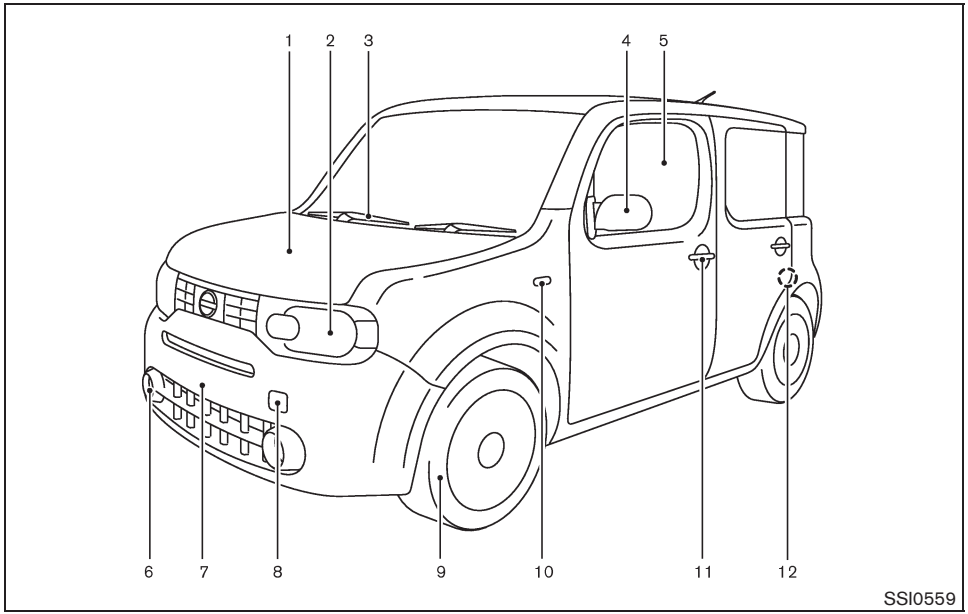

1. Hood (P.3-21)
2. Headlight and turn signal lights
   — Switch operation (P.2-23)
   — Bulb replacement (P.8-26)
3. Windshield wiper and washer
   — Switch operation (P.2-20)
   — Blade replacement (P.8-17)
   — Window washer fluid (P.8-12)
4. Outside mirrors (P.3-27)
5. Power windows (P.2-36)
6. Fog lights*
   — Switch operation (P.2-27)
   — Bulb replacement (P.8-27)
7. License plate installation (P.9-11)
8. Recovery hook (P.6-15)
9. Tires
   — Wheel and tires (P.8-28, P.9-7)
   — Flat tire (P.6-2)
   — Tire Pressure Monitoring System (TPMS) (P.2-13, P.5-3)
10. Side turn signal lights
    — Switch operation (P.2-26)
    — Bulb replacement (P.8-27)
11. Doors
    — Keys (P.3-2)
    — Door locks (P.3-4)
    — Remote keyless entry system* (P.3-7)
    — Intelligent Key system* (P.3-10)
    — Security system (P.2-17)
12. Child safety rear door lock (P.3-6)

*: if so equipped

EXTERIOR REAR

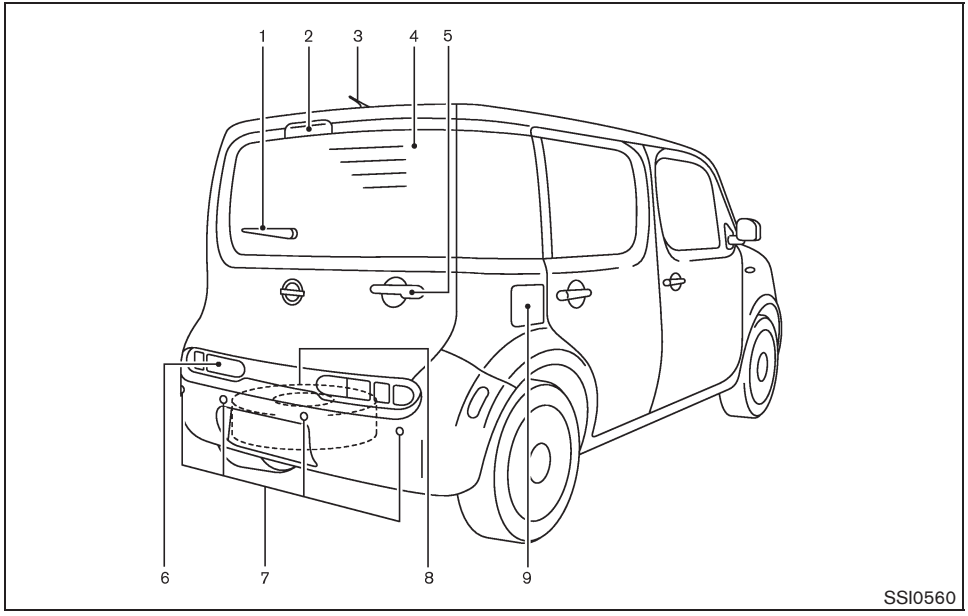

1. Rear window wiper and washer
   — Switch operation (P.2-22)
   — Window washer fluid (P.8-12)
2. High-mounted stop light
   — Bulb replacement (P.8-27)
3. Antenna (P.4-29)
   — Satellite radio antenna* (P.4-10)
4. Rear window defroster (P.2-23)
5. Back door (P.3-22)
   — Intelligent Key system* (P.3-10)
6. Rear combination light
   — Bulb replacement (P.8-27)
7. Sonar sensors*
   — Sonar system* (P.5-24)
8. Spare tire (under the vehicle) (P.6-4)
9. Fuel-filler door
   — Operation (P.3-24)
   — Fuel recommendation (P.9-3)

*: if so equipped

EXTERIOR (Krōm models)

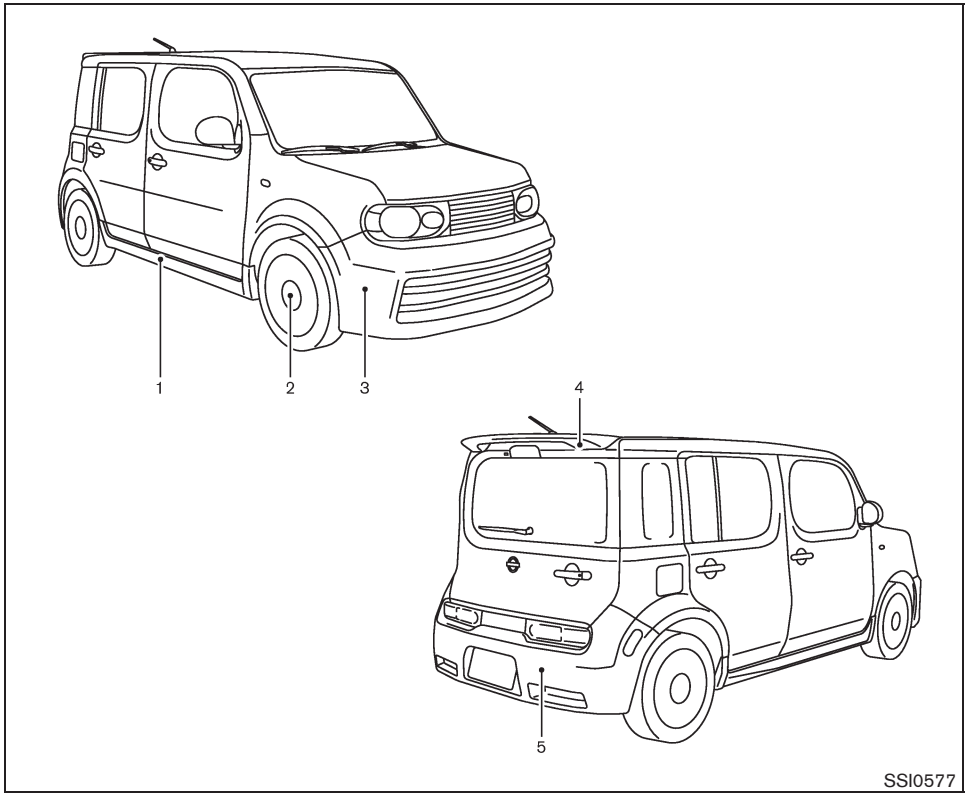

For Krōm models, the vehicle parts listed below require special care or caution for treating. Refer to additional information in each section.

1. Side sill extensions (P.3-23)
2. Aluminum alloy wheels (P.7-4)
3. Front bumper (P.3-23, P.6-14)
4. Rear spoiler (P.7-3)
5. Rear bumper (P.3-23, P.6-14)

PASSENGER COMPARTMENT

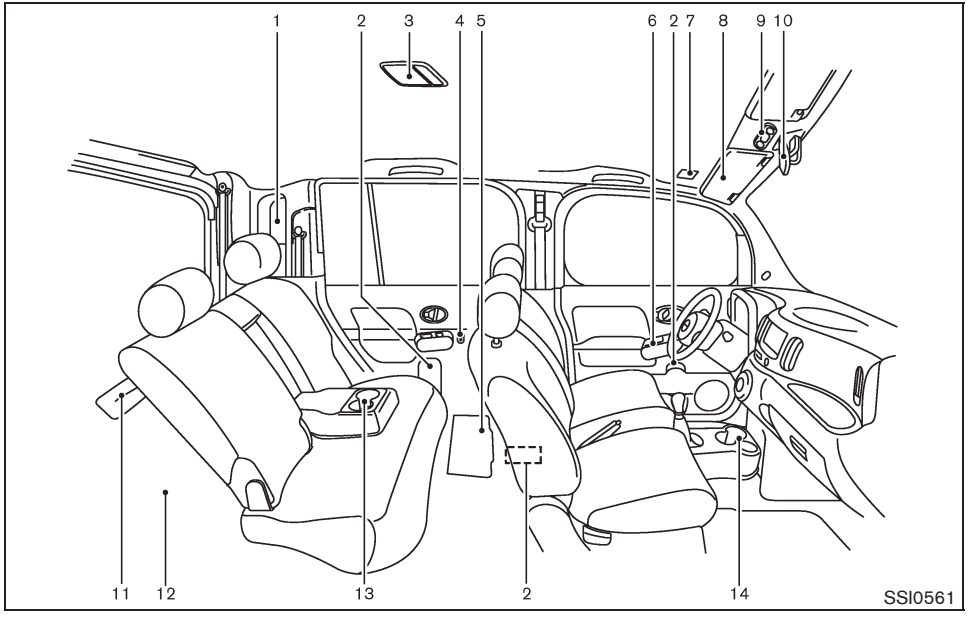

1. Rear pillar pocket (P.2-33)
2. Soft bottle holders (P.2-32)
3. Ceiling light (P.2-40)
4. Utility hooks* (P.2-36)
5. Jack and tools (P.6-3)
6. Door armrest
   — Power window switch (P.2-36)
   — Power door lock switch (P.3-5)
7. Microphone*
   — Bluetooth® Hands-Free Phone System* (P.4-31)
8. Sun visors (P.3-26)
9. Map lights* (P.2-39)
10. Inside rearview mirror (P.3-26)
11. Cargo cover* (P.2-34)
12. Cargo area
    — Luggage hooks (P.2-35)
    — Cargo light* (P.2-41)
13. Rear cup holders* (P.2-31)
14. Front cup holders (P.2-31)

*: if so equipped

COCKPIT

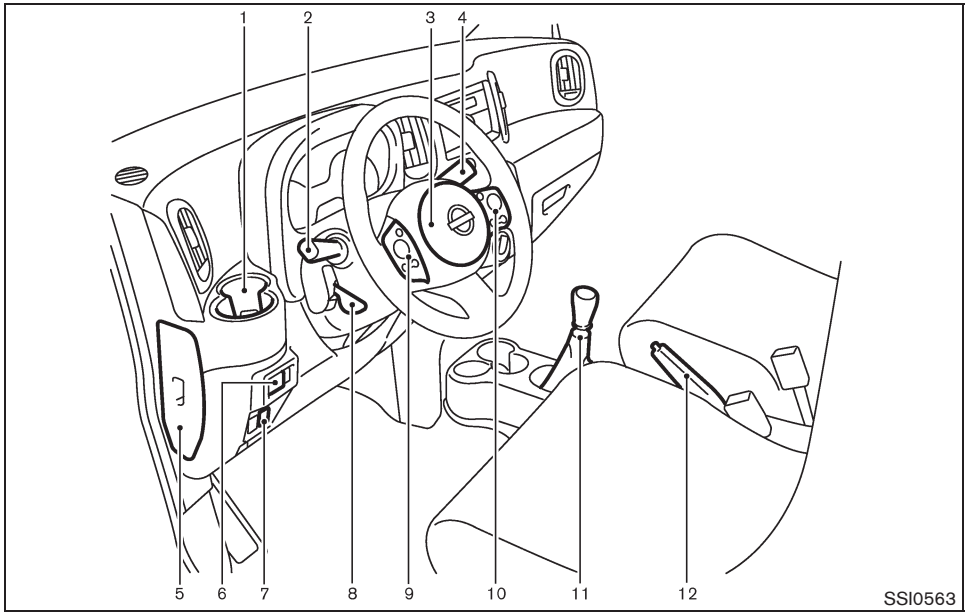

1. Front cup holders (P.2-31)
2. Headlight, fog light and turn signal switch
   — Headlight (P.2-23)
   — Turn signal (P.2-26)
   — Fog light* (P.2-27)
3. Steering wheel
   — Electric power steering system (P.5-26)
   — Horn (P.2-28)
   — Driver's supplemental front-impact air bag (P.1-40)
4. Wiper and washer switch (P.2-20)
5. Fuse box cover (P.8-21)
6. Outside mirror remote control switch (P.3-27)
7. Vehicle Dynamic Control (VDC) OFF switch (P.5-29)
8. Tilting steering wheel lever (P.3-25)
9. Steering-wheel-mounted controls (left side)*
   — Audio control* (P.4-28)
   — Bluetooth® Hands-Free Phone System control* (P.4-31)
10. Steering-wheel-mounted controls (right side)*
    — Cruise control switches* (P.5-21)
11. Selector lever or Shift lever
    — Continuously Variable Transmission (CVT) (P.5-14)
    — Manual Transmission (MT) (P.5-18)
12. Parking brake (P.5-20)

*: if so equipped

INSTRUMENT PANEL

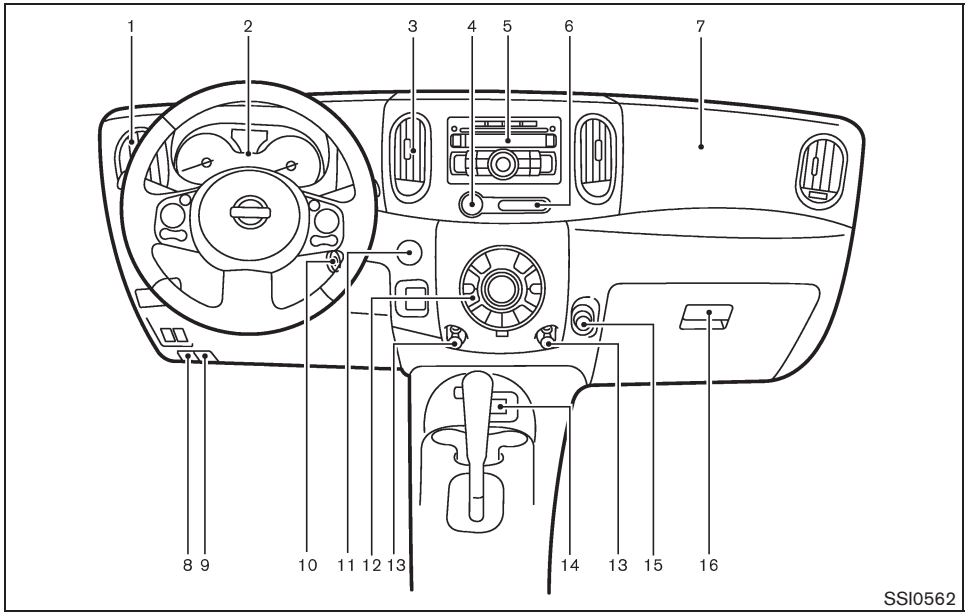

1. Side ventilator (P.4-2)
2. Meters and gauges (P.2-4)
3. Center ventilator (P.4-2)
4. Hazard warning flasher switch (P.2-27)
5. Audio system* (P.4-9)
   — Clock* (P.2-28)
6. Front passenger air bag status light (P.1-47)
7. Front passenger supplemental air bag (P.1-40)
8. Fuel-filler door release handle (P.3-24)
9. Hood release handle (P.3-21)
10. Ignition switch (models without Intelligent Key system) (P.5-7)
11. Push-button ignition switch (models with Intelligent Key system) (P.5-9)
12. Heater/air conditioner* control (P.4-2)
    — Rear window and outside mirror* defroster switch (P.2-23)
13. Utility hooks* (P.2-36)
14. iPod® connector* (P.4-25)
15. Power outlet (P.2-30)
16. Glove box (P.2-33)

*: if so equipped

METERS AND GAUGES

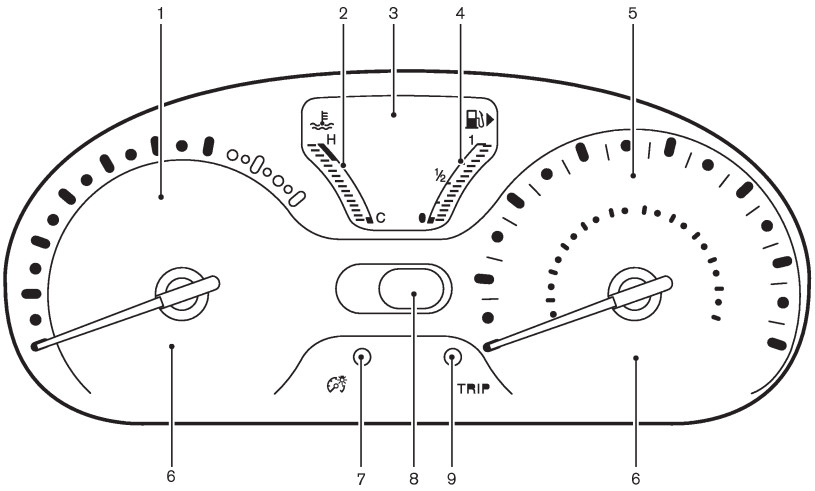

SIC4119

1. Tachometer (P.2-6)
2. Engine coolant temperature gauge (P.2-6)
3. Vehicle information display (P.2-7)
   — Odometer/twin trip odometer (P.2-5)
   — Trip computer (P.2-8)
   — Outside air temperature* (P.2-7)
4. Fuel gauge (P.2-7)
5. Speedometer (P.2-5)
6. Warning/indicator lights (P.2-10)
7. Instrument brightness control knob (P.2-26)
8. Continuously Variable Transmission (CVT) position indicator* (P.2-8)
9. RESET switch for trip odometer (P.2-5)/Trip computer mode switch (P.2-8)

*: if so equipped

ENGINE COMPARTMENT

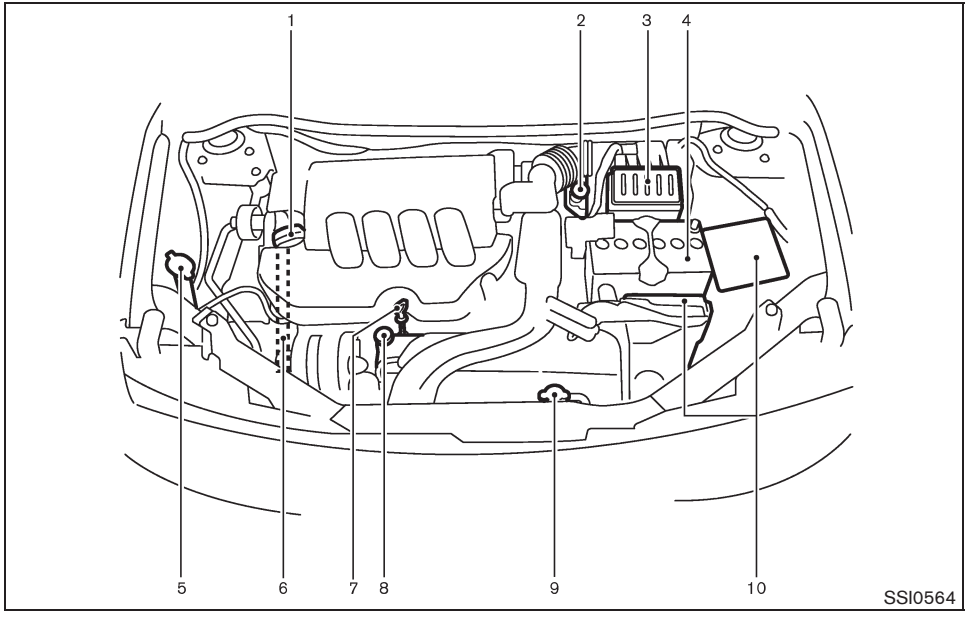

*1: for Manual Transmission (MT) models

MR18DE ENGINE

1. Engine oil filler cap (P.8-8)
2. Brake and clutch (*1) fluid reservoir (P.8-11)
3. Air cleaner (P.8-16)
4. Battery (P.8-13)
   — Jump starting (P.6-8)
5. Window washer fluid reservoir (P.8-12)
6. Engine drive belt location (P.8-15)
7. Engine oil dipstick (P.8-8)
8. Engine coolant reservoir (P.8-8)
9. Radiator filler cap (P.8-7)
   — Vehicle overheat (P.6-11)
10. Fuse/fusible link holder (P.8-19)

1 Safety — Seats, seat belts and supplemental restraint system

Seats 1-2
Front seats 1-3
Rear seats (if so equipped) 1-4
Head restraints 1-6
Front-seat Active Head Restraints 1-7
Armrest (if so equipped) 1-8
Seat belts 1-8
Precautions on seat belt usage 1-8
Child safety 1-11
Pregnant women 1-12
Injured persons 1-12
Three-point type seat belt 1-12
Seat belt extenders 1-18
Seat belt maintenance 1-18
Child restraints 1-19
Precautions on child restraints 1-19
Lower Anchors and Tethers for CHildren system (LATCH) (except for Cargo Van models) 1-20
Top tether strap child restraint 1-22
Child restraint installation using LATCH (except for Cargo Van models) 1-24
Child restraint installation using the seat belts 1-29
Booster seats 1-35
Precautions on booster seats 1-35
Booster seat installation on front passenger seat and rear seat 1-37
Supplemental restraint system 1-40
Precautions on supplemental restraint system 1-40
NISSAN Advanced Air Bag System (front seats) 1-46
Front seat-mounted side-impact supplemental air bag and roof-mounted curtain side-impact supplemental air bag systems 1-50
Seat belts with pretensioners (front seats) 1-52
Supplemental air bag warning labels 1-53
Supplemental air bag warning light 1-53
Repair and replacement procedure 1-54

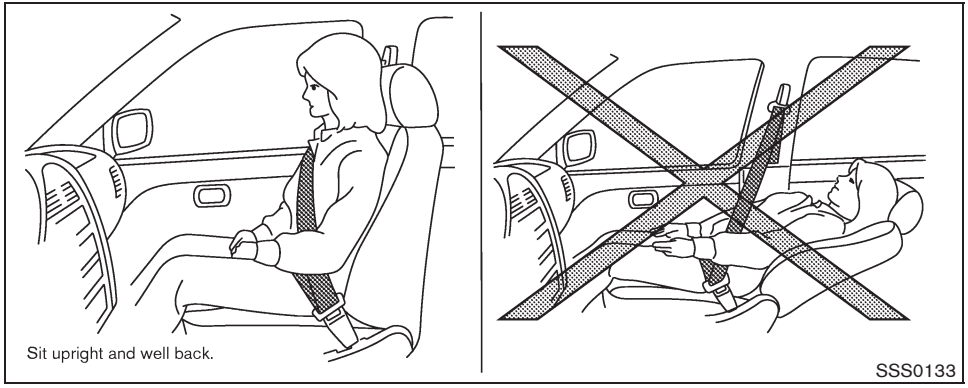

WARNING

- **Do not ride in a moving vehicle when the seatback is reclined. This can be dangerous. The shoulder belt will not be against your body. In an accident, you could be thrown into it and receive neck or other serious injuries. You could also slide under the lap belt and receive serious internal injuries.**
- **For the most effective protection when the vehicle is in motion, the seat should be upright. Always sit well back in the seat with both feet on the floor and adjust the seat properly. See "PRECAUTIONS ON SEAT BELT USAGE" later in this section.**
- **After adjustment, gently rock in the seat to make sure it is securely locked.**
- **Do not leave children unattended inside the vehicle. They could unknowingly activate switches or controls. Unattended children could become involved in serious accidents.**
- **The seatback should not be reclined any more than needed for comfort. Seat belts are most effective when the passenger sits well back and straight up in the seat. If the seatback is reclined, the risk of sliding under the lap belt and being injured is increased.**

CAUTION

When adjusting the seat positions, be sure not to contact any moving parts to avoid possible injuries and/or damages.

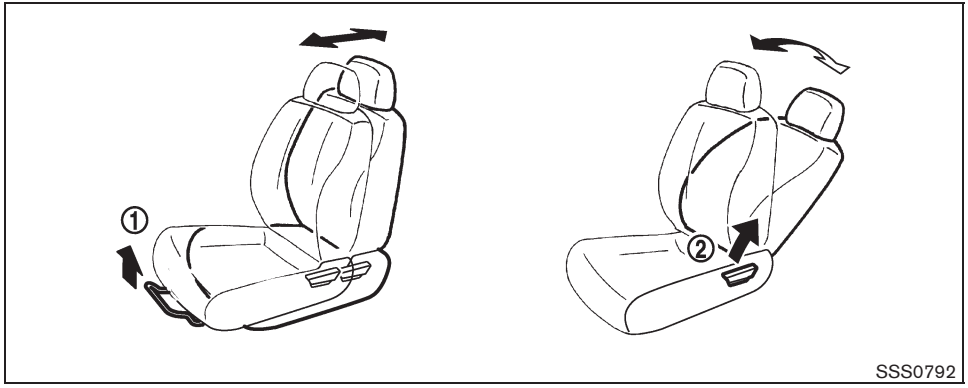

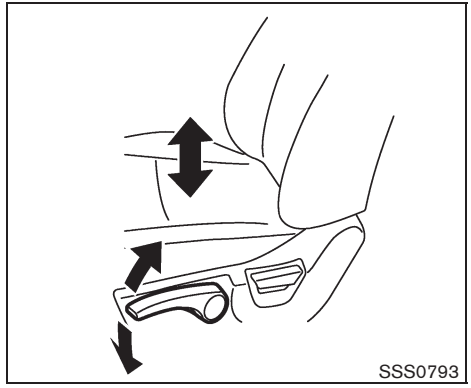

FRONT SEATS

Front manual seat adjustment

Forward and backward:

Pull the lever ① up and hold it while you slide the seat forward or backward to the desired position. Release the lever to lock the seat in position.

Reclining:

To recline the seatback, pull the lever ② up and lean back. To bring the seatback forward, pull the lever up and lean your body forward. Release the lever to lock the seatback in position.

The reclining feature allows adjustment of the seatback for occupants of different sizes for added comfort and to help obtain proper seat belt fit. (See “PRECAUTIONS ON SEAT BELT USAGE” later in this section.) Also, the seatback can be reclined to allow occupants to rest when the vehicle is stopped and the transmission is in the P (Park) position or N (Neutral) position with the parking brake fully applied.

Seat lifter (for driver’s seat):

Pull up or push down the adjusting lever to adjust the seat height until the desired position is achieved.

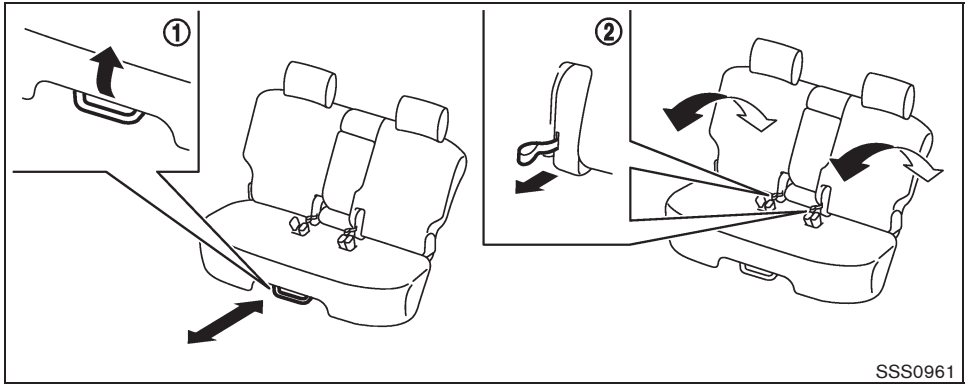

REAR SEATS (if so equipped)

Forward and backward

Pull the lever (1) up and hold it while you slide the seat forward or backward to the desired position. Release the lever to lock the seat in position.

Reclining

To recline the seatback, pull the strap (2) and lean back. To bring the seatback forward, pull the strap up and lean your body forward. Release the strap to lock the seatback in position.

The reclining feature allows adjustment of the seatback for occupants of different sizes for added comfort and to help obtain proper seat belt fit. (See “PRECAUTIONS ON SEAT BELT USAGE” later in this section.)

Folding

Before folding the rear seats:

- Secure the seat belts on the seat belt hooks on the side wall. (See “Seat belt hooks (except for Cargo Van models)” later in this section.)
- Release the connector tongue of the rear center seat belt from the buckle, and secure the connector and seat belt tongues on the seat belt hook. (See “Rear center seat belt (except for Cargo Van models)” later in this section.)

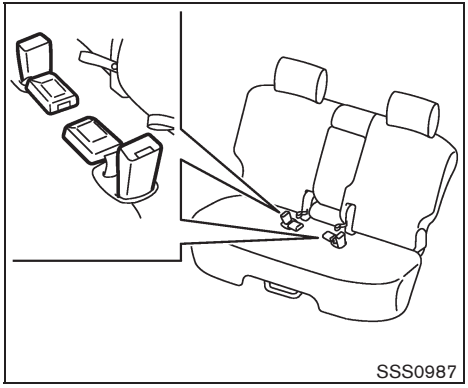

- Stow seat belt buckles by pushing the seat belt buckles into seat pockets.

The seat belt buckles should only be stowed when the rear seat is folded. The rear seat belt buckles should be in the unstowed position at all other times.

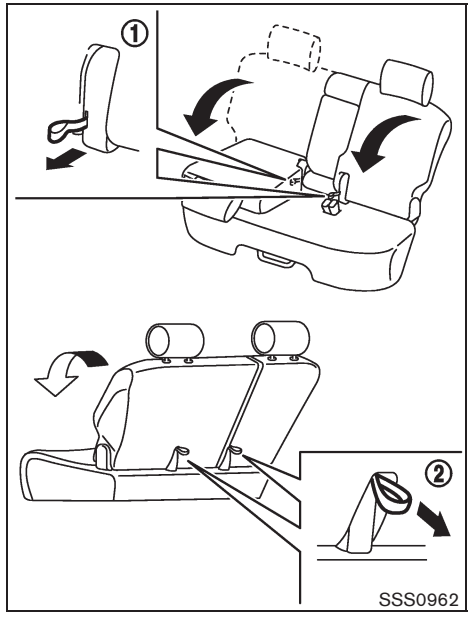

To fold down the seatback of each rear seat, pull the strap ① or ②.

CAUTION

When folding or returning the seatback(s) to the upright position, to avoid injury to yourself and others:

- **Make sure that the seat path is clear before moving the seat.**
- **The seatback is spring assisted and may move at a rapid rate. Be careful not to allow the seatback to pinch or hit any part of your body when you fold it.**

To return the seatback to the seating position, lift up each seatback and push it to the upright position until it is latched. Unstow the seat belt buckles by pulling the buckles out of the pockets.

WARNING

- **Do not use the rear seat belts when the buckles are stowed in the seat pockets. Failure to do so may reduce the effectiveness of the entire restraint system and increase the chance or severity of injury in an accident.**
- **Do not fold down the rear seats when occupants are in the rear seat area or any objects are on the rear seats.**
- **Never allow anyone to ride in the**

cargo area or on the rear seats when they are in the fold-down position. Use of these areas by passengers without proper restraints could result in serious injury in an accident or sudden stop.

- **Properly secure all cargo with ropes or straps to help prevent it from sliding or shifting. Do not place cargo higher than the seatbacks. In a sudden stop or collision, unsecured cargo could cause personal injury.**
- **When returning the seatbacks to the upright position, be certain they are completely secured in the latched position. If they are not completely secured, passengers may be injured in an accident or sudden stop.**

HEAD RESTRAINTS

WARNING

Head restraints should be adjusted properly as they may provide significant protection against injury in an accident. Do not remove them. Check the adjustment after someone else uses the seat.

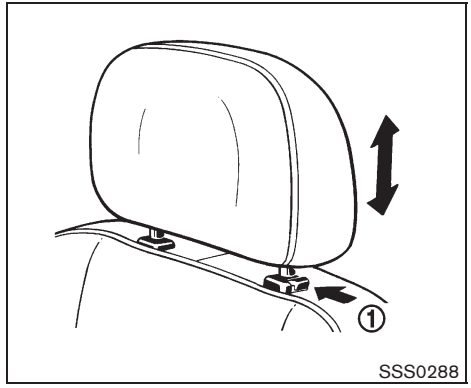

SSS0288

Adjustment (front seats)

To raise the head restraint, pull it up.

To lower, push and hold the lock knob ① and push the head restraint down.

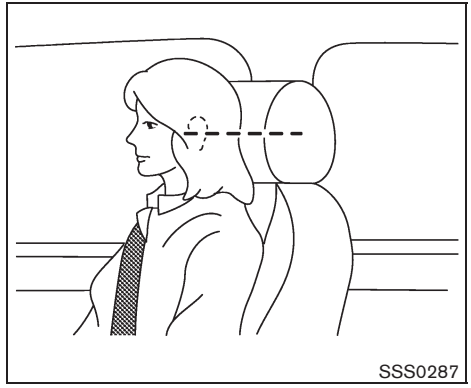
SSS0287

Adjust the head restraint so the center is level with the center of your ears.

Adjustment (rear seats)

Rear headrests cannot be adjusted.

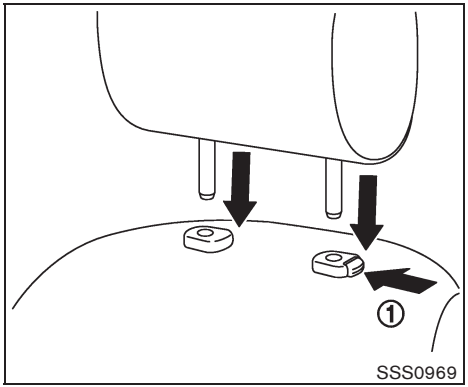

Removal and attachment

To remove the head restraint or headrest, push and hold the lock knob ① and pull the head restraint/headrest up.

To attach the head restraint/headrest, push and hold the lock knob ① and insert the head restraint/headrest stalks into the holes.

If the head restraint/headrest is removed, store it in a secure place. Reinstall the head restraint/headrest when the head restraint/headrest does not need to be removed.

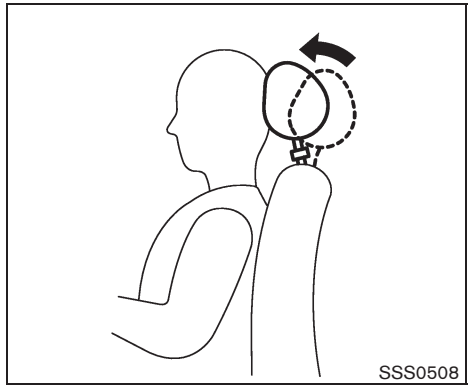

FRONT-SEAT ACTIVE HEAD RESTRAINTS

WARNING

- **Always adjust the head restraints properly as specified in this section. Failure to do so can reduce the effectiveness of the Active Head Restraint.**
- **Active Head Restraints are designed to supplement other safety systems. Always wear seat belts. No system can prevent all injuries in any accident.**
- **Do not attach anything to the head restraint stalks. Doing so could impair Active Head Restraint function.**

The Active Head Restraint moves forward utilizing the force that the seatback receives from the occupant in a rear-end collision. The movement of the head restraint helps support the occupant's head by reducing its backward movement and helping absorb some of the forces that may lead to whiplash-type injuries.

Active Head Restraints are effective for collisions at low to medium speeds in which it is said that whiplash injury occurs most.

Active Head Restraints operate only in certain rear-end collisions. After the collision, the head restraints return to their original positions.

Properly adjust the Active Head Restraints as described in this section.

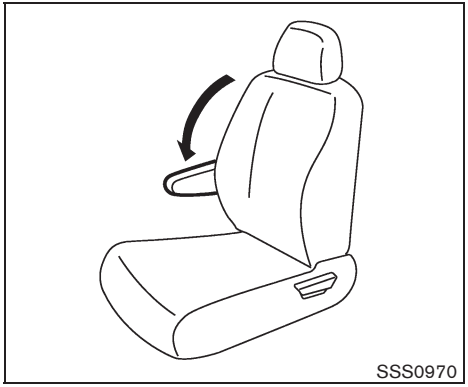

ARMREST (if so equipped)

Front

Pull the armrest down until it is horizontal.

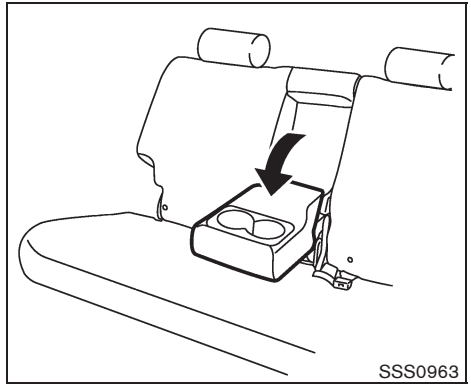

Rear

Pull the armrest forward until it is horizontal.

PRECAUTIONS ON SEAT BELT USAGE

If you are wearing your seat belt properly adjusted, and you are sitting upright and well back in your seat with both feet on the floor, your chances of being injured or killed in an accident and/or the severity of injury may be greatly reduced. NISSAN strongly encourages you and all of your passengers to buckle up every time you drive, even if your seating position includes a supplemental air bag.

Most U.S. states and Canadian provinces or territories specify that seat belts be worn at all times when a vehicle is being driven.

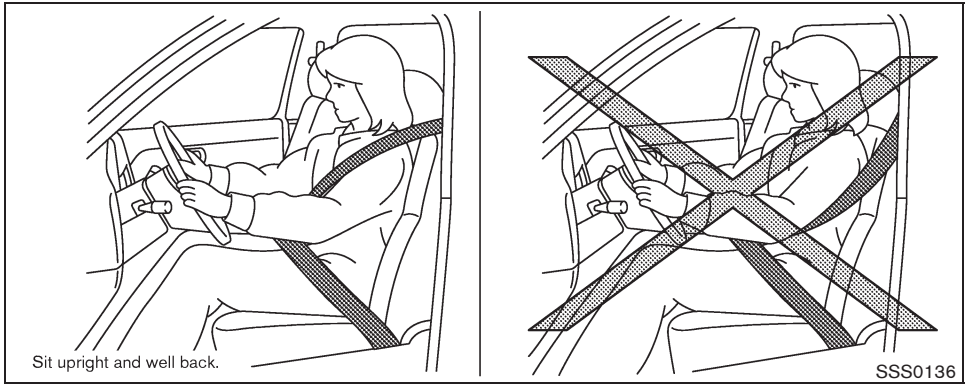
Sit upright and well back.
SSS0136

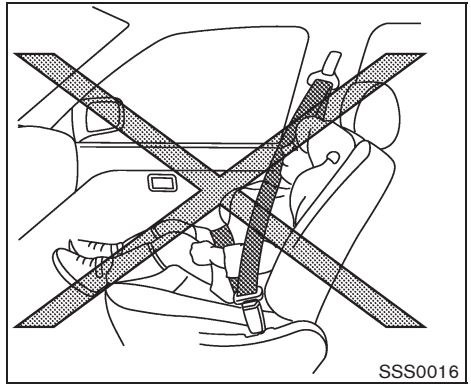
SSS0016

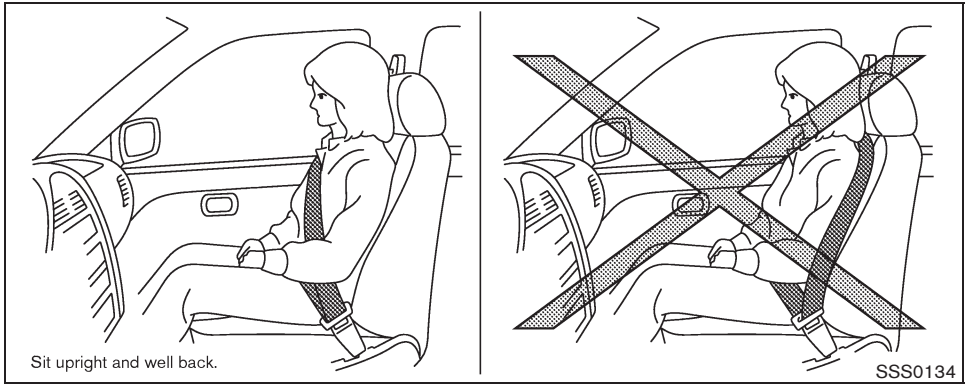
Sit upright and well back.
SSS0134

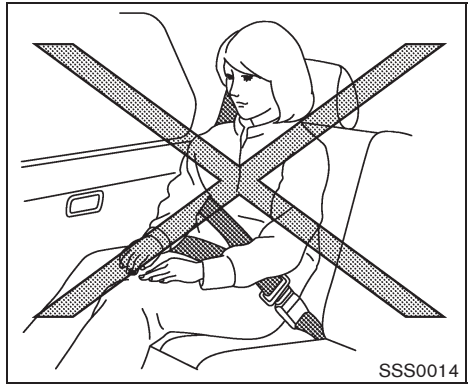
SSS0014

⚠ WARNING

- Every person who drives or rides in this vehicle should use a seat belt at all times. Children should be properly restrained in the rear seat and, if appropriate, in a child restraint.
- The seat belt should be properly adjusted to a snug fit. Failure to do so may reduce the effectiveness of the entire restraint system and increase the chance or severity of injury in an accident. Serious injury or death can occur if the seat belt is not worn properly.
- Always route the shoulder belt over your shoulder and across your chest. Never put the belt behind your back, under your arm or across your neck. The belt should be away from your face and neck, but not falling off your shoulder.
- Position the lap belt as low and snug as possible AROUND THE HIPS, NOT THE WAIST. A lap belt worn too high could increase the risk of internal injuries in an accident.
- Be sure the seat belt tongue is securely fastened to the proper buckle.
- Do not wear the seat belt inside out or twisted. Doing so may reduce its effectiveness.
- Do not allow more than one person to use the same seat belt.
- Never carry more people in the vehicle than there are seat belts.
- If the seat belt warning light glows continuously while the ignition is turned ON with all doors closed and all seat belts fastened, it may indicate a malfunction in the system. Have the system checked by a NISSAN dealer.
- No changes should be made to the seat belt system. For example, do not modify the seat belt, add material, or install devices that may change the seat belt routing or tension. Doing so may affect the operation of the seat belt system. Modifying or tampering with the seat belt system may result in serious personal injury.
- Once a seat belt pretensioner has activated, it cannot be reused and must be replaced together with the retractor. See a NISSAN dealer.
- Removal and installation of the pretensioner system components should be done by a NISSAN dealer.
- All seat belt assemblies, including retractors and attaching hardware, should be inspected after any collision by a NISSAN dealer. NISSAN recommends that all seat belt assemblies in use during a collision be replaced unless the collision was minor and the belts show no damage and continue to operate properly. Seat belt assemblies not in use during a collision should also be inspected and replaced if either damage or improper operation is noted.
- All child restraints and attaching hardware should be inspected after any collision. Always follow the restraint manufacturer's inspection instructions and replacement recommendations. The child restraints should be replaced if they are damaged.

CHILD SAFETY

Children need adults to help protect them. They need to be properly restrained.

In addition to the general information in this manual, child safety information is available from many other sources, including doctors, teachers, government traffic safety offices, and community organizations. Every child is different, so be sure to learn the best way to transport your child.

There are three basic types of child restraint systems:

- Rear-facing child restraint
- Front-facing child restraint
- Booster seat

The proper restraint depends on the child's size. Generally, infants (up to about 1 year and less than 20 lb (9 kg)) should be placed in rear-facing child restraints. Front-facing child restraints are available for children who outgrow rear-facing child restraints and are at least 1 year old. Booster seats are used to help position a vehicle lap/shoulder belt on a child who can no longer use a front-facing child restraint.

WARNING

Infants and children need special protection. The vehicle's seat belts may not fit them properly. The shoulder belt may come too close to the face or neck. The lap belt may not fit over their small hip bones. In an accident, an improperly fitting seat belt could cause serious or fatal injury. Always use appropriate child restraints.

All U.S. states and Canadian provinces or territories require the use of approved child restraints for infants and small children. (See "CHILD RESTRAINTS" later in this section.)

Also, there are other types of child restraints available for larger children for additional protection.

NISSAN recommends that all pre-teens and children be restrained in the rear seat. According to accident statistics, children are safer when properly restrained in the rear seat than in the front seat.

This is especially important because your vehicle has a supplemental restraint system (air bag system) for the front passenger. (See "SUPPLEMENTAL RESTRAINT SYSTEM" later in this section.)

Infants

Infants up to at least 1 year old should be placed in a rear-facing child restraint. NISSAN recommends that infants be placed in child restraints that comply with Federal Motor Vehicle Safety Standards or Canadian Motor Vehicle Safety Standards. You should choose a child restraint that fits your vehicle and always follow the manufacturer's instructions for installation and use.

Small children

Children that are over 1 year old and weigh at least 20 lb (9 kg) can be placed in a front-facing child restraint. Refer to the manufacturer's instructions for minimum and maximum weight and height recommendations. NISSAN recommends that small children be placed in child restraints that comply with Federal Motor Vehicle Safety Standards or Canadian Motor Vehicle Safety Standards. You should choose a child restraint that fits your vehicle and always follow the manufacturer's instructions for installation and use.

Larger children

Children who are too large for child restraints should be seated and restrained by the seat belts which are provided. The seat belt may not fit properly if the child is less than 4 ft 9 in (142.5 cm) tall and weighs between 40 lb (18 kg) and 80 lb (36 kg). A booster seat should be used to obtain proper seat belt fit.

NISSAN recommends that a child be placed in a commercially available booster seat if the shoulder belt in the child's seating position fits

close to the face or neck or if the lap portion of the seat belt goes across the abdomen. The booster seat should raise the child so that the shoulder belt is properly positioned across the top, middle portion of the shoulder and the lap belt is low on the hips. A booster seat can only be used in seating positions that have a three-point type seat belt. The booster seat should fit the vehicle seat and have a label certifying that it complies with Federal Motor Vehicle Safety Standards or Canadian Motor Vehicle Safety Standards. Once the child has grown so the shoulder belt is no longer on or near the face and neck, use the shoulder belt without the booster seat.

WARNING

Never let a child stand or kneel on any seat and do not allow a child in the cargo areas while the vehicle is moving. The child could be seriously injured or killed in an accident or sudden stop.

PREGNANT WOMEN

NISSAN recommends that pregnant women use seat belts. The seat belt should be worn snug, and always position the lap belt as low as possible around the hips, not the waist. Place the shoulder belt over your shoulder and across your chest. Never put the lap/shoulder belt over your abdominal area. Contact your doctor for specific recommendations.

INJURED PERSONS

NISSAN recommends that injured persons use seat belts, depending on the injury. Check with your doctor for specific recommendations.

THREE-POINT TYPE SEAT BELT

WARNING

- **Every person who drives or rides in this vehicle should use a seat belt at all times.**
- **Do not ride in a moving vehicle when the seatback is reclined. This can be dangerous. The shoulder belt will not be against your body. In an accident, you could be thrown into it and receive neck or other serious injuries. You could also slide under the lap belt and receive serious internal injuries.**
- **For the most effective protection when the vehicle is in motion, the seat should be upright. Always sit well back in the seat with both feet on the floor and adjust the seat belt properly.**

Fastening the seat belts

1. Adjust the seat. (See “SEATS” earlier in this section.)
2. Make sure rear seat belt buckles are removed from the stowed position. See “Rear seat belt buckles (except for Cargo Van models)” later in this section.

3. Slowly pull the seat belt out of the retractor and insert the tongue into the buckle until you hear and feel the latch engage.
   - **The retractor is designed to lock during a sudden stop or on impact. A slow pulling motion permits the belt to move and allows you some freedom of movement in the seat.**
   - **If the seat belt cannot be pulled from its fully retracted position, firmly pull the belt and release it. Then smoothly pull the belt out of the retractor.**

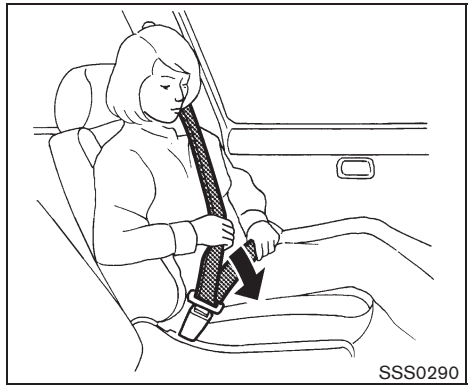

4. Position the lap belt portion **low and snug on the hips** as shown.
5. Pull the shoulder belt portion toward the retractor to take up extra slack. Be sure the shoulder belt is routed over your shoulder and across your chest.

The front passenger seat and the rear seating positions three-point seat belts have two modes of operation:

- Emergency Locking Retractor (ELR)
- Automatic Locking Retractor (ALR)

The Emergency Locking Retractor (ELR) mode allows the seat belt to extend and retract to allow the driver and passengers some freedom of movement in the seat. The ELR locks the seat belt when the vehicle slows down rapidly or during certain impacts.

The Automatic Locking Retractor (ALR) mode (child restraint mode) locks the seat belt for child restraint installation.

When ALR mode is activated the seat belt cannot be extended again until the seat belt tongue is detached from the buckle and fully retracted. The seat belt returns to the ELR mode after the seat belt fully retracts. For additional information, see “CHILD RESTRAINTS” later in this section.

The ALR mode should be used only for child restraint installation. During normal seat belt use by an occupant, the ALR mode should not be activated. If it is activated, it may cause uncomfortable seat belt tension.

WARNING

When fastening the seat belts, be certain that seatbacks are completely secured in the latched position. If they are not completely secured, passengers may be injured in an accident or sudden stop.

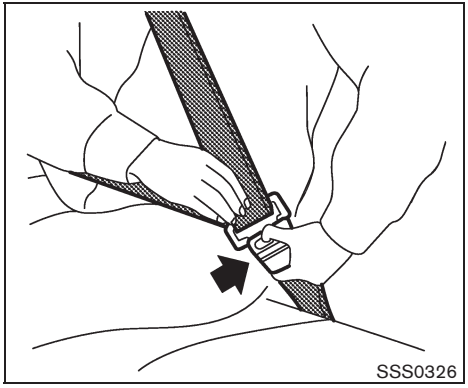

Unfastening the seat belts

To unfasten the seat belt, push the button on the buckle. The seat belt automatically retracts.

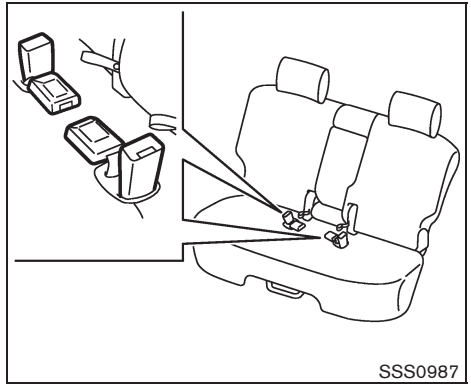

Rear seat belt buckles (except for Cargo Van models)

The rear seat belt buckles can be stowed by pushing the buckles into the pockets of the seat cushion when the rear seatback is folded. The buckles should only be stowed when the seatback is folded. At all other times the seat belt buckles must be pulled out of the pockets in the unstowed position.

WARNING

Do not use the rear seat belts when the buckles are stowed in the seat pockets. Failure to do so may reduce the effectiveness of the entire restraint system and increase the chance or severity of injury in an accident.

Checking seat belt operation

Seat belt retractors are designed to lock seat belt movement by two separate methods:

- When the belt is pulled quickly from the retractor.
- When the vehicle slows down rapidly.

To increase your confidence in the seat belts, check the operation as follows:

- Grasp the shoulder belt and pull forward quickly. The retractor should lock and restrict further belt movement.

If the retractor does not lock during this check or if you have any question about seat belt operation, see a NISSAN dealer.

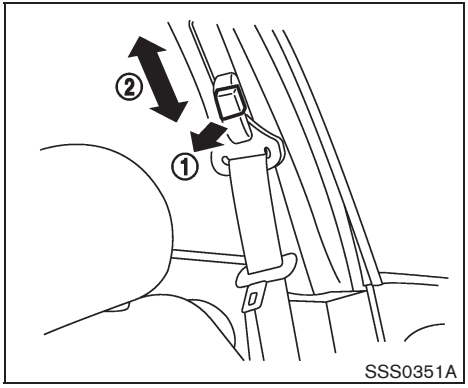

Shoulder belt height adjustment (for front seats)

The shoulder belt anchor height should be adjusted to the position best for you. (See “PRECAUTIONS ON SEAT BELT USAGE” earlier in this section.)

To adjust, pull the adjustment button ①, and then move the shoulder belt anchor to the desired position ②, so that the belt passes over the center of the shoulder. The belt should be away from your face and neck, but not falling off of your shoulder. Release the adjustment button to lock the shoulder belt anchor into position.

WARNING

- **After adjustment, release the adjustment button and try to move the shoulder belt anchor up and down to make sure it is securely fixed in position.**
- **The shoulder belt anchor height should be adjusted to the position best for you. Failure to do so may reduce the effectiveness of the entire restraint system and increase the chance or severity of injury in an accident.**

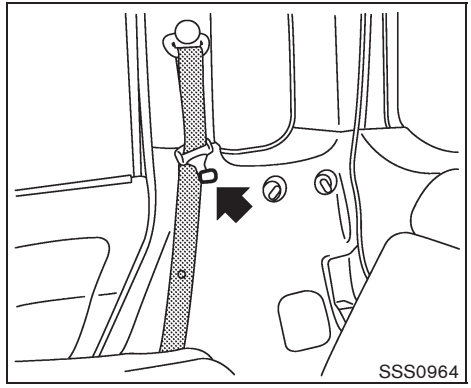

Seat belt hooks (except for Cargo Van models)

When the rear seat belts are not in use and when folding down the rear seats, hook the rear outer seat belts on the seat belt hooks.

The hook for the rear center seat belt is located on the left wall behind the rear seat. (See “Rear center seat belt (except for Cargo Van models)” later in this section for details.)

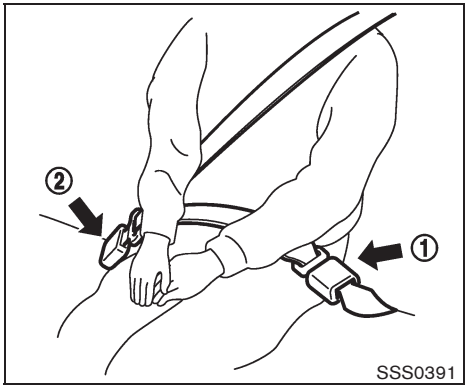

Rear center seat belt (except for Cargo Van models)

The rear center seat belt has a connector tongue ① and a seat belt tongue ②. Both the connector tongue and the seat belt tongue must be securely latched for proper seat belt operation.

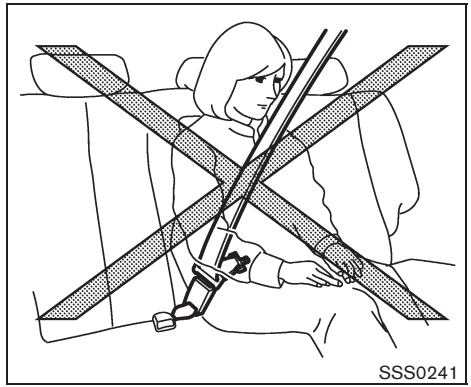

WARNING

- **Always fasten the connector tongue and the seat belt in the order shown.**
- **Always make sure both the connector tongue and the seat belt tongue are secured when using the seat belt or installing a child restraint. Do not use the seat belt or child restraint with only the seat belt tongue attached. This could result in serious personal injury in case of an accident or a sudden stop.**

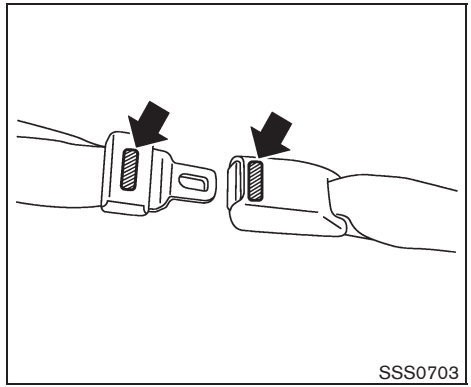

The center seat belt buckle and the tongue are identified by the CENTER mark. The center seat belt tongue can be fastened only into the center seat belt buckle.

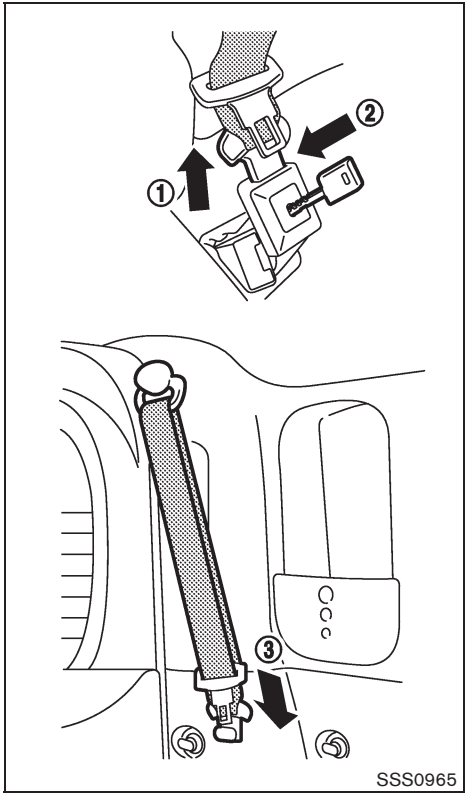

Stowing rear center seat belt:

When folding down the rear seat, the rear center seat belt can be retracted into a stowed position as follows:

1. Hold the connector tongue ① so that the seat belt does not retract suddenly when the tongue is released from the connector buckle. Release the connector tongue ① by inserting a suitable tool such as key ② into the connector buckle.
2. Retract the seat belt and secure the seat belt tongue and connector tongue on the seat belt hook ③.

WARNING

- **Do not unfasten the rear center seat belt connector except when folding down the rear seat.**
- **When returning the seatback, be sure to attach the rear center seat belt connector.**

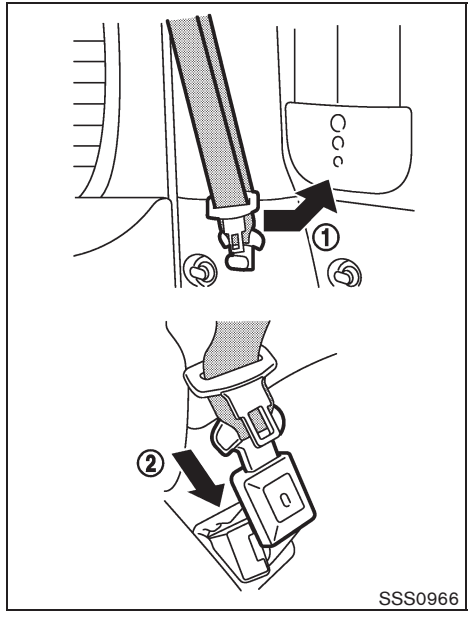

Attaching rear center seat belt:

Always be sure the rear center seat belt connector tongue and connector buckle are attached. Disconnect only when folding down the rear seat.

To connect the buckle:

1. Remove the seat belt tongue and connector tongue from the seat belt hook ①.
2. Pull the seat belt and secure the connector buckle until it clicks ②.

The center seat belt connector tongue can be attached only into the rear center seat belt connector buckle.

To fasten the seat belt, see “Fastening the seat belts” earlier in this section.

WARNING

- **When attaching the rear center seat belt connector, be certain that the seatbacks are completely secured in the latched position and the rear center seat belt connector is completely secured.**
- **If the rear center seat belt connector and the seatbacks are not secured in the correct position, serious personal injury may result in an accident or sudden stop.**

SEAT BELT EXTENDERS

If, because of body size or driving position, it is not possible to properly fit the lap-shoulder belt and fasten it, an extender is available that is compatible with the installed seat belts. The extender adds approximately 8 in (200 mm) of length and may be used for either the driver or front passenger seating position. See a NISSAN dealer for assistance if an extender is required.

WARNING

- **Only NISSAN seat belt extenders, made by the same company which made the original equipment seat belts, should be used with NISSAN seat belts.**
- **Adults and children who can use the standard seat belt should not use an extender. Such unnecessary use could result in serious personal injury in the event of an accident.**
- **Never use seat belt extenders to install child restraints. If the child restraint is not secured properly, the child could be seriously injured in a collision or a sudden stop.**

SEAT BELT MAINTENANCE

- **To clean the seat belt webbing,** apply a mild soap solution or any solution recommended for cleaning upholstery or carpets. Then wipe with a cloth and allow the seat belts to dry in the shade. Do not allow the seat belts to retract until they are completely dry.
- **If dirt builds up in the shoulder belt guide** of the seat belt anchors, the seat belts may retract slowly. Wipe the shoulder belt guide with a clean, dry cloth.
- **Periodically check to see that the seat belt and the metal components**, such as buckles, tongues, retractors, flexible wires and anchors, work properly. If loose parts, deterioration, cuts or other damage on the webbing is found, the entire seat belt assembly should be replaced.

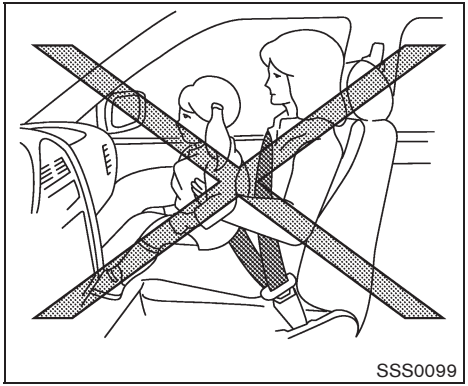
SSS0099

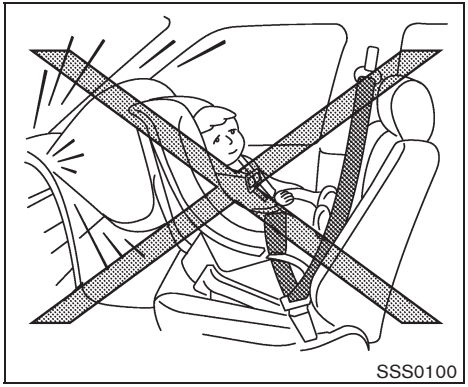
SSS0100

PRECAUTIONS ON CHILD RESTRAINTS

WARNING

- **Infants and small children should always be placed in an appropriate child restraint while riding in the vehicle. Failure to use a child restraint can result in serious injury or death.**
- **Infants and small children should never be carried on your lap. It is not possible for even the strongest adult to resist the forces of a severe accident. The child could be crushed between the adult and parts of the vehicle. Also, do not put the same seat belt around both your child and yourself.**
- **Even with the NISSAN Advanced Air Bag System, never install a rear-facing child restraint in the front seat. An inflating front air bag could seriously injure or kill your child. A rear-facing child restraint must only be used in the rear seat.**
- **NISSAN recommends that the child restraint be installed in the rear seat. According to accident statistics, children are safer when properly restrained in the rear seat than in the front seat. If you must install a front-facing child restraint in the front seat, see "CHILD RESTRAINT INSTALLATION USING THE SEAT BELTS" later in this section.**
- **Improper use or improper installation of a child restraint can increase the risk or severity of injury for both the child and other occupants of the vehicle and can lead to serious injury or death in an accident.**
- **Follow all of the child restraint manufacturer's instructions for installation and use. When purchasing a child restraint, be sure to select one which will fit your child and vehicle. It may not be possible to properly install some types of child restraints in your vehicle.**
- **If the child restraint is not anchored properly, the risk of a child being injured in a collision or a sudden stop greatly increases.**
- **Child restraint anchor points are designed to withstand only those**

loads imposed by correctly fitted child restraints. Under no circumstances are they to be used for adult seat belts or harnesses.

- **Adjustable seatbacks should be positioned to fit the child restraint, but as upright as possible.**
- **After attaching the child restraint, test it before you place the child in it. Push it from side to side while holding the seat near the LATCH attachment or by the seat belt path. The child restraint should not move more than 1 inch (25 mm) from side to side. Try to tug it forward and check to see if the belt holds the restraint in place. If the restraint is not secure, tighten the belt as necessary, or put the restraint in another seat and test it again. You may need to try a different child restraint. Not all child restraints fit in all types of vehicles.**
- **When your child restraint is not in use, keep it secured with the LATCH system or a seat belt to prevent it from being thrown around in case of a sudden stop or accident.**

CAUTION

Remember that a child restraint left in a closed vehicle can become very hot. Check the seating surface and buckles before placing your child in the child restraint.

This vehicle is equipped with a universal child restraint lower anchor system, referred to as the Lower Anchors and Tethers for CHildren System or LATCH. Some child restraints include two rigid or webbing-mounted attachments that can be connected to these lower anchors. For details, see "Lower Anchors and Tethers for CHildren System (LATCH) (except for Cargo Van models)" later in this section.

If you do not have a LATCH compatible child restraint, the vehicle seat belts can be used. (See "CHILD RESTRAINT INSTALLATION USING THE SEAT BELTS" later in this section.) In general, child restraints are also designed to be installed with a lap/shoulder seat belt.

Several manufacturers offer child restraints for infants and small children of various sizes. When selecting any child restraint, keep the following points in mind:

- Choose only a restraint with a label certifying that it complies with Federal Motor Vehicle Safety Standard 213 or Canadian Motor Vehicle Safety Standard 213.
- Check the child restraint in your vehicle to be sure it is compatible with the vehicle's seat and seat belt system.
- If the child restraint is compatible with your vehicle, place your child in the child restraint and check the various adjustments to be sure the child restraint is compatible with your child. Choose a child restraint that is designed for your child's height and weight. Always follow all recommended procedures.

All U.S. states and Canadian provinces or territories require that infants and small children be restrained in an approved child restraint at all times while the vehicle is being operated. Canadian law requires the top tether strap on front-facing child restraints be secured to the designated anchor point on the vehicle.

Lower Anchors and Tethers for CHildren System (LATCH) (except for Cargo Van models)

Your vehicle is equipped with special anchor points that are used with Lower Anchors and Tethers for CHildren System (LATCH) compatible child restraints. This system may also be referred to as the ISOFIX or ISOFIX compatible system. With this system, you do not have to use a vehicle seat belt to secure the child restraint.

The LATCH anchor points are provided to install child restraints in the rear outboard seating positions only. Do not attempt to install a child restraint in the center position using the LATCH anchors.

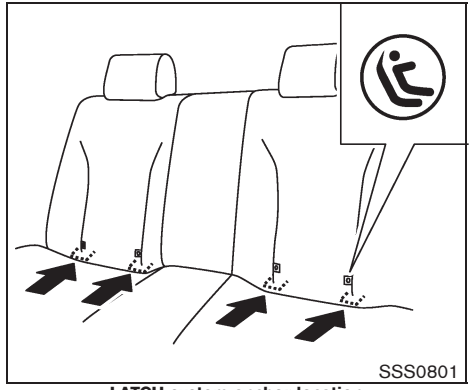

LATCH system anchor location

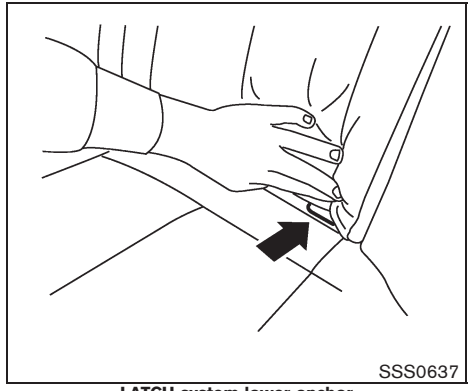

LATCH system lower anchor

LATCH lower anchor point locations

The LATCH anchors are located at the rear of the seat cushion near the seatback. A label is attached to the seatback to help you locate the LATCH anchors.

WARNING

- **Attach LATCH system compatible child restraints only at the locations shown in the illustration. If a child restraint is not secured properly, your child could be seriously injured or killed in an accident.**
- **Do not secure a child restraint in the center rear seating position using the LATCH anchors. The child restraint will not be secured properly.**
- **Child restraint anchor points are designed to withstand only those loads imposed by correctly fitted child restraints. Under no circumstances are they to be used for adult seat belts or harnesses.**

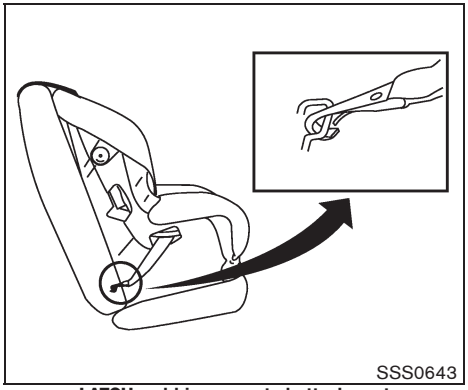

LATCH webbing-mounted attachment

Installing child restraint LATCH anchor attachments

LATCH compatible child restraints include two rigid or webbing-mounted attachments that can be connected to two anchors located at certain seating positions in your vehicle. With this system, you do not have to use a vehicle seat belt to secure the child restraint. Check your child restraint for a label stating that it is compatible with LATCH system. This information may also be in the instructions provided by the child restraint manufacturer.

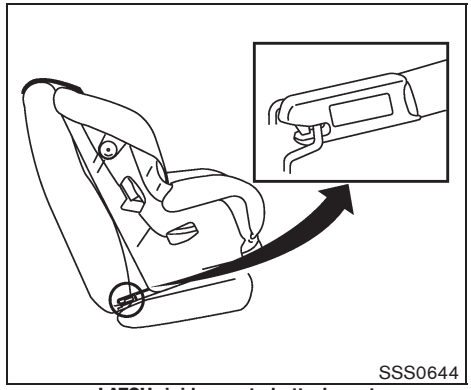

LATCH rigid-mounted attachment

LATCH child restraints generally require the use of a top tether strap. (See “TOP TETHER STRAP CHILD RESTRAINT” later in this section for installation instructions.)

When installing a child restraint, carefully read and follow the instructions in this manual and those supplied with the child restraint. (See “CHILD RESTRAINT INSTALLATION USING LATCH (except for Cargo Van models)” later in this section.)

TOP TETHER STRAP CHILD RESTRAINT

If the manufacturer of your child restraint requires the use of a top tether strap, it must be secured to an anchor point.

WARNING

- **Child restraint anchor points are designed to withstand only those loads imposed by correctly fitted child restraints. Under no circumstances are they to be used for adult seat belts or harnesses.**
- **If the cargo cover contacts the top tether strap when it is attached to the top tether anchor, remove the cargo cover from the vehicle or secure it on the cargo floor below its attachment location. If the cargo cover is not removed, it may damage the top tether strap during a collision. Your child could be seriously injured or killed in a collision if the child restraint top tether strap is damaged.**
- **Do not allow cargo to contact the top tether strap when it is attached to the top tether anchor. Properly**

secure the cargo so it does not contact the top tether strap. Cargo that is not properly secured or that contacts the top tether strap may damage the top tether strap during a collision. Your child could be seriously injured or killed in a collision if the child restraint top tether strap is damaged.

Top tether anchor point locations

Anchor points are located in the following locations.

- On the seat cushion behind the outboard and center seating positions (except for Cargo Van models)
- On the floor behind the front passenger seat (Cargo Van models)

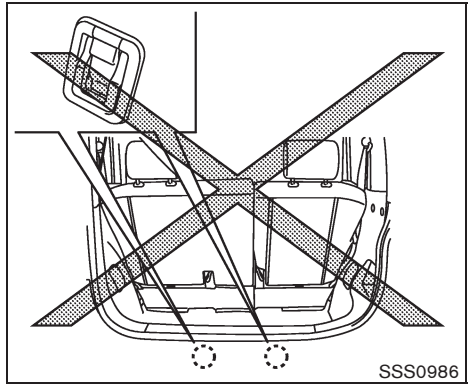

WARNING

Do not attach upper tether anchors to the luggage hooks. The child restraint will not be properly installed. Your child could be injured or killed in a sudden stop or collision.

Installing top tether strap

First secure the child restraint with the LATCH system (except for Cargo Van models: rear outboard seating positions only) or the seat belt as applicable.

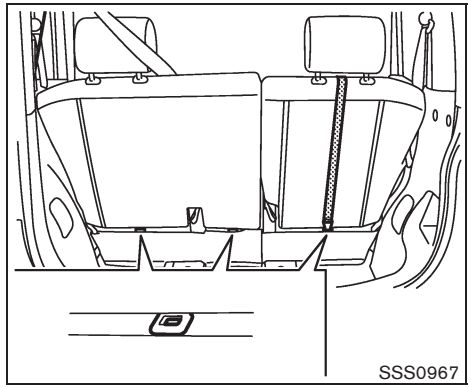

Rear seats (except for Cargo Van models):

1. Position the top tether strap over the top of the seatback and under the headrest.
2. Secure the tether strap to the tether anchor on the seat directly behind the child restraint.
3. Tighten the tether strap according to the manufacturer's instructions to remove any slack.

For the best child restraint fit, see the child restraint installation instructions in this section and the child restraint manufacturer's instructions.

If you have any questions when installing a top tether strap child restraint on the rear seat, consult your NISSAN dealer for details.

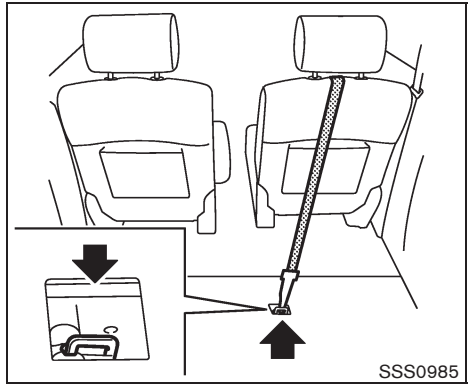

Front passenger seat (Cargo Van models):

For the front passenger seat in Cargo Van models, install the top tether strap according to the following procedure.

1. Adjust the head restraint to its highest position.
2. Route the top tether strap between the head restraint and the top of the seatback.
3. Secure the tether strap to the tether anchor point on the floor behind the seat.
4. Tighten the tether strap according to the manufacturer's instructions to remove any slack.

For the best child restraint fit, see the child restraint installation instructions in this section and the child restraint manufacturer's instructions.

If you have any questions when installing a top tether strap child restraint on the front passenger's seat, consult your NISSAN dealer for details.

CHILD RESTRAINT INSTALLATION USING LATCH (except for Cargo Van models)

WARNING

- **Attach LATCH system compatible child restraints only at the locations shown. For the LATCH lower anchor locations, see "Lower Anchors and Tethers for CHildren System (LATCH) (except for Cargo Van models)" earlier in this section. If a child restraint is not secured properly, your child could be seriously injured or killed in an accident.**
- **The LATCH anchors are designed to withstand only those loads imposed by correctly fitted child restraints. Under no circumstance are they to be used for adult seat belts or**

harnesses.

- **Inspect the lower anchors by inserting your fingers into the lower anchor area and feeling to make sure there are no obstructions over the LATCH anchors, such as seat belt webbing or seat cushion material. The child restraint will not be secured properly if the LATCH anchors are obstructed.**

Front-facing

Follow these steps to install a front-facing child restraint using LATCH system:

1. Adjust the rear seat to the upright and rearmost position.
2. Position the child restraint on the seat. Always follow the child restraint manufacturer's instructions.

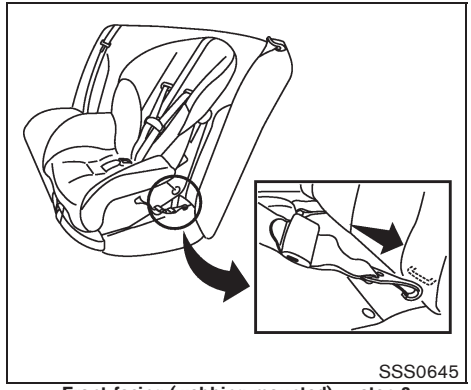

Front-facing (webbing-mounted) — step 3

3. Secure the child restraint anchor attachments to the LATCH lower anchors. Check to make sure the LATCH attachment is properly attached to the lower anchors.

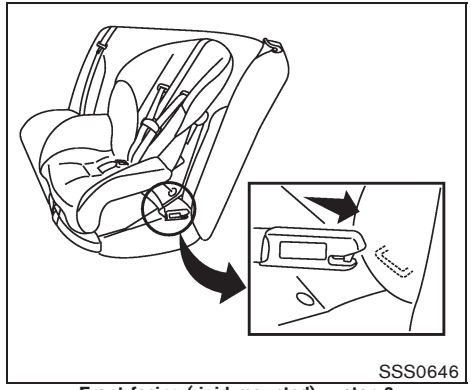

Front-facing (rigid-mounted) — step 3

4. The back of the child restraint should be secured against the seatback. If necessary, remove the headrest to obtain the correct child restraint fit. (See “HEAD RESTRAINTS” earlier in this section.)

   If the headrest is removed, store it in a secure place. Be sure to reinstall the headrest when the child restraint is removed. If the seating position does not have a removal headrest and it is interfering with the proper child restraint fit, try another seating position or a different child restraint.

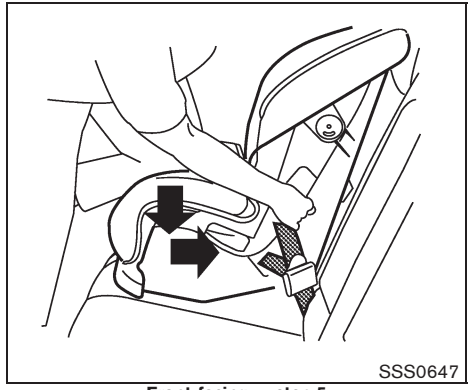

Front-facing — step 5

5. For child restraints that are equipped with webbing-mounted attachments, remove any additional slack from the anchor attachments. Press downward and rearward firmly in the center of the child restraint with your knee to compress the vehicle seat cushion and seatback while tightening the webbing of the anchor attachments.

6. If the child restraint is equipped with a top tether strap, route the top tether strap and secure the tether strap to the tether anchor point. (See “TOP TETHER STRAP CHILD RESTRAINT” earlier in this section.)

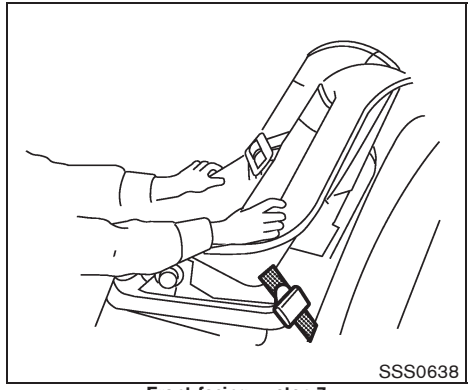

Front-facing — step 7

7. After attaching the child restraint, test it before you place the child in it. Push it from side to side while holding the seat near the LATCH attachment path. The child restraint should not move more than 1 inch (25 mm) from side to side. Try to tug it forward and check to see if the LATCH attachment holds the restraint in place. If the restraint is not secure, tighten the LATCH attachment as necessary, or put the restraint in another seat and test it again. You may need to try a different child restraint. Not all child restraints fit in all types of vehicles.

8. Check to make sure the child restraint is properly secured prior to each use. If the child restraint is loose, repeat steps 3 through 7.

Rear-facing

Follow these steps to install a rear-facing child restraint using LATCH system:

1. Adjust the rear seat to the upright and rearmost position.
2. Position the child restraint on the seat. Always follow the child restraint manufacturer's instructions.

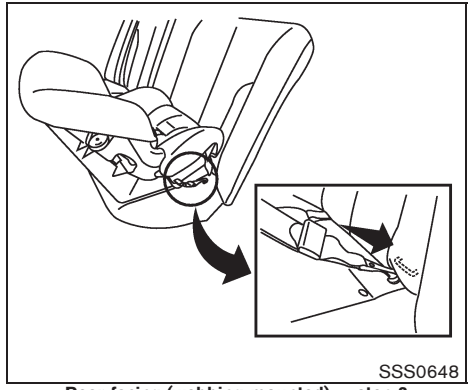

Rear-facing (webbing-mounted) — step 3

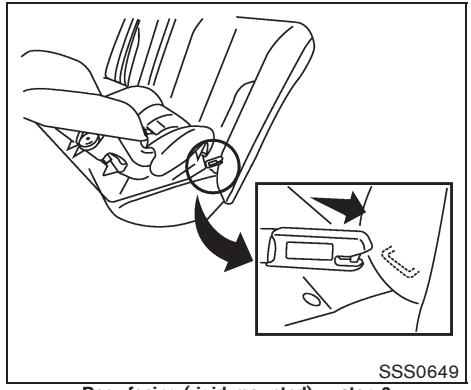

Rear-facing (rigid-mounted) — step 3

3. Secure the child restraint anchor attachments to the LATCH lower anchors. Check to make sure the LATCH attachment is properly attached to the lower anchors.

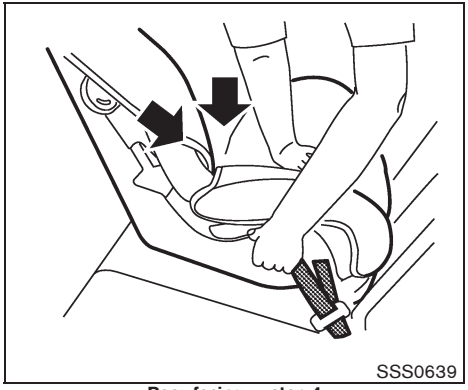

Rear-facing — step 4

4. For child restraints that are equipped with webbing-mounted attachments, remove any additional slack from the anchor attachments. Press downward and rearward firmly in the center of the child restraint with your hand to compress the vehicle seat cushion and seatback while tightening the webbing of the anchor attachments.

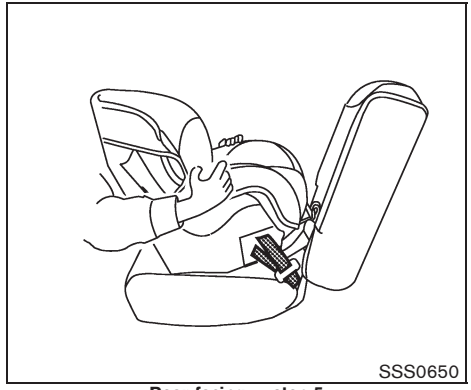

Rear-facing — step 5

5. After attaching the child restraint, test it before you place the child in it. Push it from side to side while holding the seat near the LATCH attachment path. The child restraint should not move more than 1 inch (25 mm) from side to side. Try to tug it forward and check to see if the LATCH attachment holds the restraint in place. If the restraint is not secure, tighten the LATCH attachment as necessary, or put the restraint in another seat and test it again. You may need to try a different child restraint. Not all child restraints fit in all types of vehicles.

6. Check to make sure the child restraint is properly secured prior to each use. If the child restraint is loose, repeat steps 3 through 5.

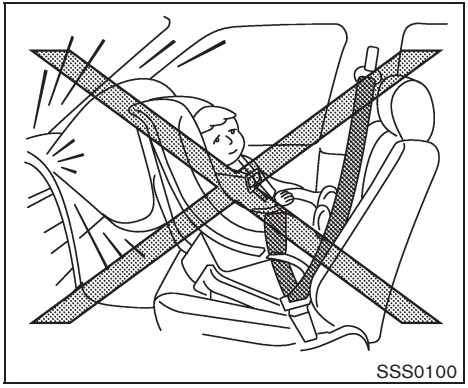

CHILD RESTRAINT INSTALLATION USING THE SEAT BELTS

WARNING

- **Even with the NISSAN Advanced Air Bag System, never install a rear-facing child restraint in the front passenger seat. Front air bags inflate with great force. A rear-facing child restraint could be struck by the front air bag in a crash and could seriously injure or kill your child.**
- **NISSAN recommends that child restraints be installed in the rear seat. However, if you must install a front-facing child restraint in the front passenger seat, move the passenger seat to the rearmost position. Also, be sure the front passenger air bag status light is illuminated to indicate the passenger air bag is OFF. See "Front passenger air bag and status light" later in this section for details.**
- **The three-point seat belt in your vehicle is equipped with an Automatic Locking Retractor (ALR) which must be used when installing a child restraint.**
- **Failure to use the ALR mode will result in the child restraint not being properly secured. The restraint could tip over or otherwise be unsecured and cause injury to the child in a sudden stop or collision.**
- **When using the rear center seat belt to install a child restraint, make sure the connector tongue and the seat belt tongue are secured. Do not use the seat belt with only the seat belt tongue attached. This could result in serious personal injury in case of an accident or sudden stop.**
- **A child restraint with a top tether strap should not be used in the front passenger seat (except for Cargo Van models).**

The instructions in this section apply to child restraint installation using the vehicle seat belts in the rear seat or the front passenger seat.

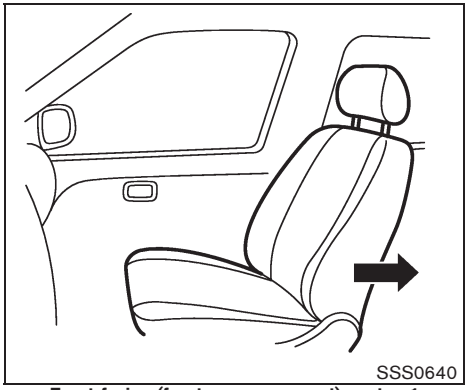

Front-facing (front passenger seat) — step 1

Front-facing

Follow these steps to install a front-facing child restraint using the vehicle seat belt in the rear seat (except for Cargo Van models) or in the front passenger seat:

1. Adjust the rear seat to the upright and rearmost position.

   If you must install a child restraint in the front seat, it should be placed in a front-facing direction only. Move the seat to the rearmost position. Child restraints for infants must be used in the rear-facing direction and therefore must not be used in the front seat.

2. Position the child restraint on the seat. Always follow the child restraint manufacturer's instructions.

   The back of the child restraint should be secured against the seatback.

   If necessary, adjust the head restraint (front passenger seat only) or remove the head restraint/headrest to obtain the correct child restraint fit. (See "HEAD RESTRAINTS" earlier in this section.)

   If the head restraint/headrest is removed, store it in a secure place. Be sure to reinstall the head restraint/headrest when the child restraint is removed.

   If the seating position does not have a removal head restraint/headrest and it is interfering with the proper child restraint fit, try another seating position or a different child restraint.

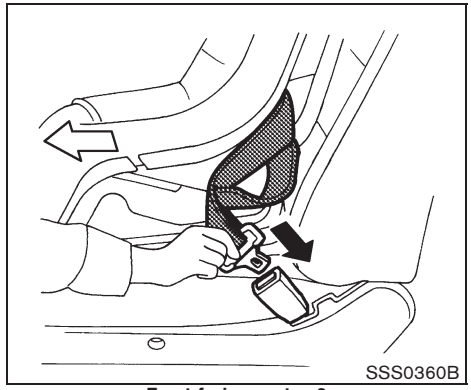

Front-facing — step 3

3. Route the seat belt tongue through the child restraint and insert it into the buckle until you hear and feel the latch engage. Be sure to follow the child restraint manufacturer's instructions for belt routing.

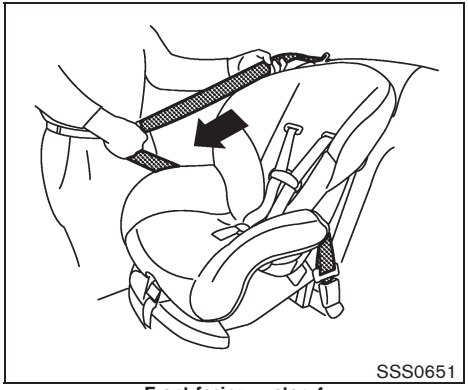

Front-facing — step 4

4. Pull the shoulder belt until the belt is fully extended. At this time, the seat belt retractor is in the Automatic Locking Retractor (ALR) mode (child restraint mode). It reverts to the Emergency Locking Retractor (ELR) mode when the seat belt is fully retracted.

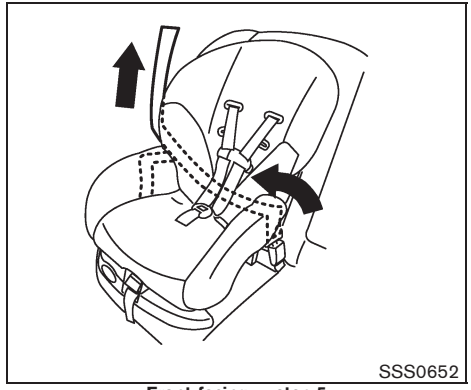

Front-facing — step 5

5. Allow the seat belt to retract. Pull up on the shoulder belt to remove any slack in the belt.

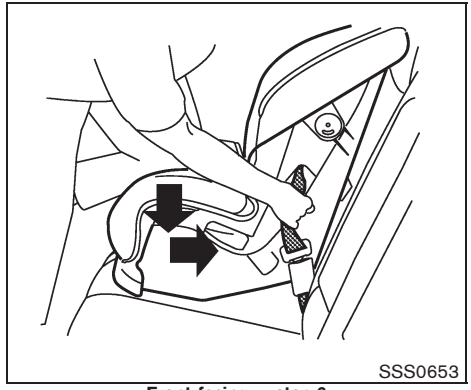

Front-facing — step 6

6. Remove any additional slack from the seat belt; press downward and rearward firmly in the center of the child restraint with your knee to compress the vehicle seat cushion and seatback while pulling up on the seat belt.

7. If the child restraint is equipped with a top tether strap, route the top tether strap and secure the tether strap to the tether anchor point. (See “TOP TETHER STRAP CHILD RESTRAINT” earlier in this section.) Do not install child restraints that require the use of a top tether strap to seating positions that do not have a top tether anchor.

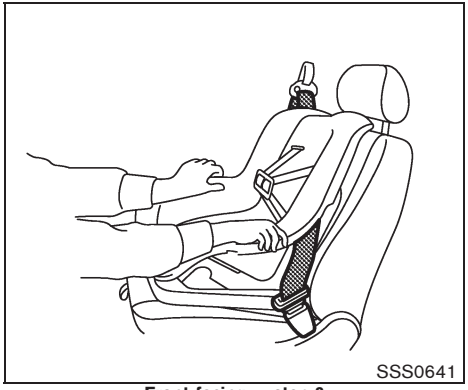

Front-facing — step 8

8. After attaching the child restraint, test it before you place the child in it. Push it from side to side while holding the seat by the seat belt path. The child restraint should not move more than 1 inch (25 mm) from side to side. Try to tug it forward and check to see if the belt holds the restraint in place. If the restraint is not secure, tighten the belt as necessary, or put the restraint in another seat and test it again. You may need to try a different child restraint. Not all child restraints fit in all types of vehicles.
9. Check that the retractor is in the ALR mode by trying to pull more seat belt out of the retractor. If you cannot pull any more belt webbing out of the retractor, the retractor is in the ALR mode.
10. Check to make sure the child restraint is properly secured prior to each use. If the seat belt is not locked, repeat steps 3 through 9.

Front-facing — step 11

11. If the child restraint is installed in the front passenger seat, place the ignition switch in the ON position. The front passenger air bag status light PASS AIR BAG OFF should illuminate. If this light is not illuminated, see “Front passenger air bag and status light” later in this section. **Move the child restraint to another seating position**. Have the system checked by a NISSAN dealer.

After the child restraint is removed and the seat belt is fully retracted, the ALR mode (child restraint mode) is canceled.

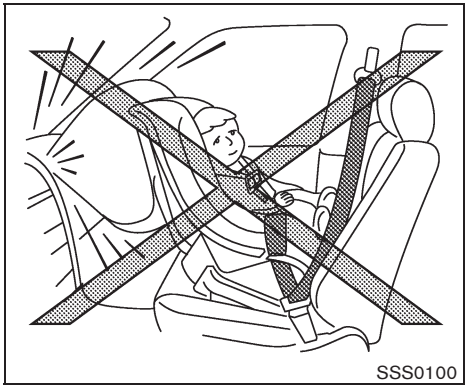

Rear-facing

Follow these steps to install a rear-facing child restraint using the vehicle seat belt in the rear seat (except for Cargo Van models):

1. **Child restraints for infants must be used in the rear-facing direction and therefore must not be used in the front seat.**

   Adjust the rear seat to the upright and rearmost position. Position the child restraint on the seat. Always follow the restraint manufacturer's instructions.

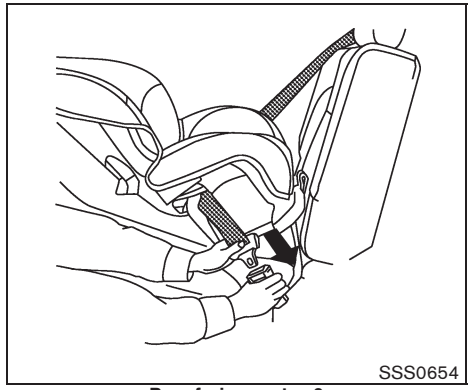

Rear-facing — step 2

2. Route the seat belt tongue through the child restraint and insert it into the buckle until you hear and feel the latch engage. Be sure to follow the child restraint manufacturer's instructions for belt routing.

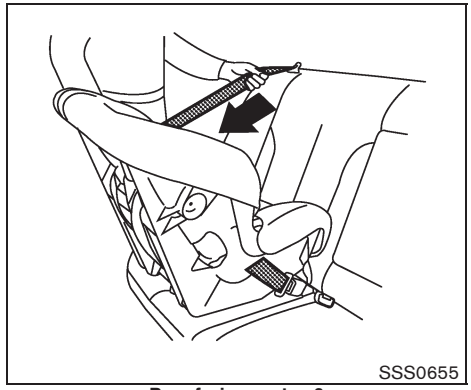

Rear-facing — step 3

3. Pull the shoulder belt until the belt is fully extended. At this time, the seat belt retractor is in the Automatic Locking Retractor (ALR) mode (child restraint mode). It reverts to the Emergency Locking Retractor (ELR) mode when the seat belt is fully retracted.

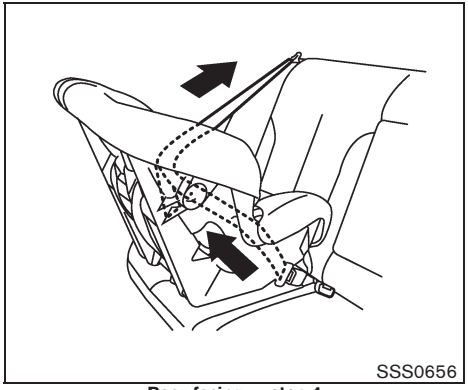

Rear-facing — step 4

4. Allow the seat belt to retract. Pull up on the shoulder belt to remove any slack in the belt.

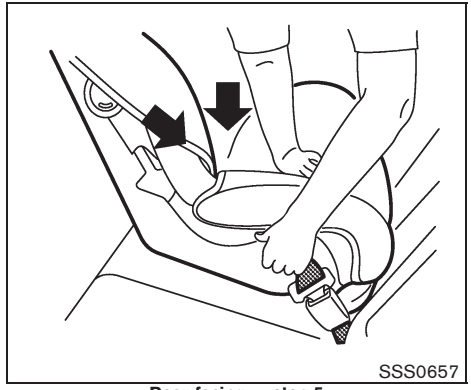

Rear-facing — step 5

5. Remove any additional slack from the child restraint; press downward and rearward firmly in the center of the child restraint with your hand to compress the vehicle seat cushion and seatback while pulling up on the seat belt.

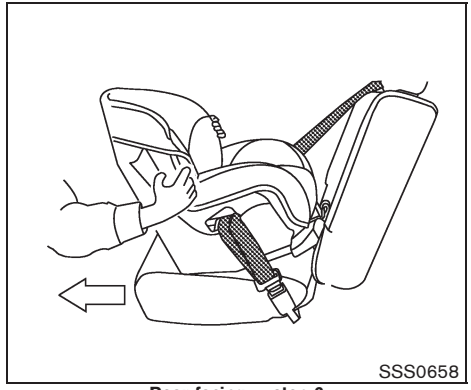

Rear-facing — step 6

6. After attaching the child restraint, test it before you place the child in it. Push it from side to side while holding the seat by the seat belt path. The child restraint should not move more than 1 inch (25 mm) from side to side. Try to tug it forward and check to see if the belt holds the restraint in place. If the restraint is not secure, tighten the belt as necessary, or put the restraint in another seat and test it again. You may need to try a different child restraint. Not all child restraints fit in all types of vehicles.

7. Check that the retractor is in the ALR mode by trying to pull more seat belt out of the retractor. If you cannot pull any more seat belt webbing out of the retractor, the retractor is in the ALR mode.
8. Check to make sure that the child restraint is properly secured prior to each use. If the seat belt is not locked, repeat steps 3 through 7.

After the child restraint is removed and the seat belt fully retracted, the ALR mode (child restraint mode) is canceled.

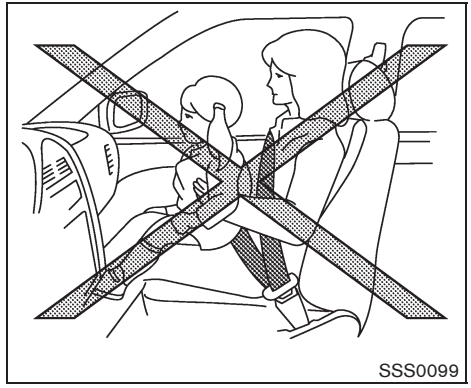

PRECAUTIONS ON BOOSTER SEATS

WARNING

- **Infants and small children should always be placed in an appropriate child restraint while riding in the vehicle. Failure to use a child restraint or booster seat can result in serious injury or death.**
- **Infants and small children should never be carried on your lap. It is not possible for even the strongest adult to resist the forces of a severe accident. The child could be crushed between the adult and parts of the vehicle. Also, do not put the same seat belt around both your child and yourself.**
- **NISSAN recommends that the booster seat be installed in the rear seat. According to accident statistics, children are safer when properly restrained in the rear seat than in the front seat. If you must install a booster seat in the front seat, see "BOOSTER SEAT INSTALLATION ON FRONT PASSENGER SEAT AND REAR SEAT" later in this section.**
- **A booster seat must only be installed in a seating position that has a lap/shoulder belt. Failure to use a three-point type seat belt with a booster seat can result in a serious injury in sudden stop or collision.**
- **Improper use or improper installation of a booster seat can increase the risk or severity of injury for both the child and other occupants of the vehicle and can lead to serious injury or death in an accident.**
- **Do not use towels, books, pillows or other items in place of a booster**

seat. Items such as these may move during normal driving or a collision and result in serious injury or death. Booster seats are designed to be used with a lap/shoulder belt. Booster seats are designed to properly route the lap and shoulder portions of the seat belt over the strongest portions of a child's body to provide the maximum protection during a collision.

- **Follow all of the booster seat manufacturer's instructions for installation and use. When purchasing a booster seat, be sure to select one which will fit your child and vehicle. It may not be possible to properly install some types of booster seats in your vehicle.**
- **If the booster seat and seat belt is not used properly, the risk of a child being injured in a collision or a sudden stop greatly increases.**
- **Adjustable seatbacks should be positioned to fit the booster seat, but as upright as possible.**
- **After placing the child in the booster seat and fastening the seat belt, make sure the shoulder portion of the belt is away from the child's face and neck and the lap portion of the belt does not cross the abdomen.**
- **Do not put the shoulder belt behind the child or under the child's arm. If you must install a booster seat in the front seat, see "BOOSTER SEAT INSTALLATION ON FRONT PASSENGER SEAT AND REAR SEAT" later in this section.**
- **When your booster seat is not in use, keep it secured with a seat belt to prevent it from being thrown around in case of a sudden stop or accident.**

CAUTION

Remember that a booster seat left in a closed vehicle can become very hot. Check the seating surface and buckles before placing your child in the booster seat.

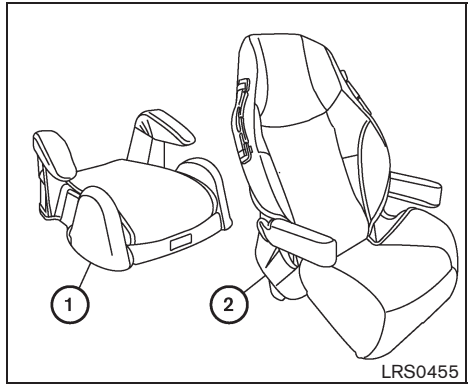

Booster seats of various sizes are offered by several manufacturers. When selecting any booster seat, keep the following points in mind:

- Choose only a booster seat with a label certifying that it complies with Federal Motor Vehicle Safety Standard 213 or Canadian Motor Vehicle Safety Standard 213.
- Check the booster seat in your vehicle to be sure it is compatible with the vehicle's seat and seat belt system.

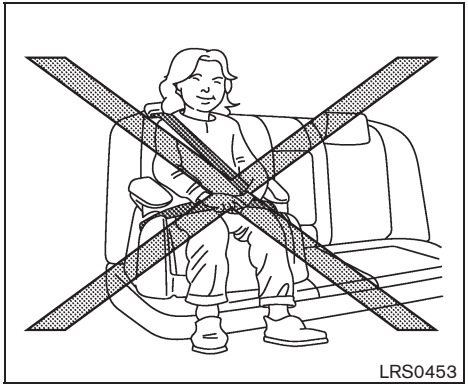

- Make sure the child's head will be properly supported by the booster seat or vehicle seat. The seatback must be at or above the center of the child's ears. For example, if a low back booster seat ① is chosen, the vehicle seatback must be at or above the center of the child's ears. If the seatback is lower than the center of the child's ears, a high back booster seat ② should be used.

- If the booster seat is compatible with your vehicle, place your child in the booster seat and check the various adjustments to be sure the booster seat is compatible with your child. Always follow all recommended procedures.

All U.S. states and Canadian provinces or territories require that infants and small children be restrained in an approved child restraint at all times while the vehicle is being operated.

The instructions in this section apply to booster seat installation in the rear seats or the front passenger seat.

BOOSTER SEAT INSTALLATION ON FRONT PASSENGER SEAT AND REAR SEAT

WARNING

NISSAN recommends that booster seats be installed in the rear seat. However, if you must install a booster seat in the front passenger seat, move the passenger's seat to the rearmost position.

CAUTION

Do not use the lap/shoulder belt Automatic Locking Retractor (ALR) mode when using a booster seat with the seat belts.

Follow these steps to install a booster seat in the rear seat or in the front passenger seat:

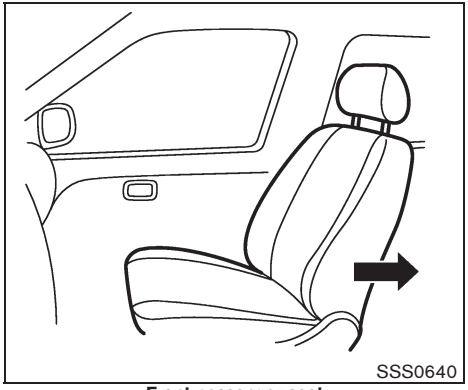

Front passenger seat

1. Adjust the rear seat to the upright and rearmost position.

   If you must install a booster seat in the front seat, move the seat to the rearmost position.

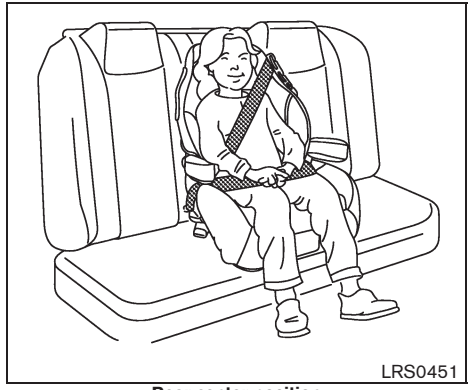

Rear center position

2. Position the booster seat on the seat. Only place it in a front-facing direction. Always follow the booster seat manufacturer's instructions.
3. The booster seat should be positioned on the vehicle seat so that it is stable.

Rear outboard position

If necessary, adjust the head restraint (front passenger seat only) or remove the head restraint/headrest to obtain the correct booster seat fit. (See "HEAD RESTRAINTS" earlier in this section.)

If the head restraint/headrest is removed, store it in a secure place. Be sure to reinstall the head restraint/headrest when the booster seat is removed.

If the seating position does not have a removable head restraint/headrest and it is interfering with the proper booster seat fit, try another seating position or a different booster seat.

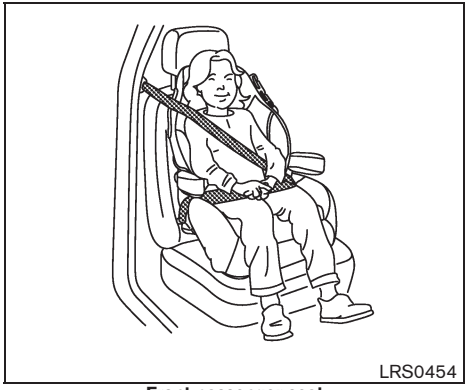

Front passenger seat

4. Position the lap portion of the seat belt low and snug on the child's hips. Be sure to follow the booster seat manufacturer's instructions for adjusting the seat belt routing.

5. Pull the shoulder belt portion of the seat belt toward the retractor to take up extra slack. Be sure the shoulder belt is positioned across the top, middle portion of the child's shoulder. Be sure to follow the booster seat manufacturer's instructions for adjusting the seat belt routing.

6. Follow the warnings, cautions and instructions for properly fastening a seat belt shown in the "THREE-POINT TYPE SEAT BELT" earlier in this section.

7. If the booster seat is installed in the front passenger seat, place the ignition switch in the ON position. The front passenger air bag status light PASS AIR BAG OFF may or may not be illuminated depending on the size of the child and the type of booster seat used. (See "Front passenger air bag and status light" later in this section.)

SUPPLEMENTAL RESTRAINT SYSTEM

PRECAUTIONS ON SUPPLEMENTAL RESTRAINT SYSTEM

This Supplemental Restraint System (SRS) section contains important information concerning the following systems:

- Driver and passenger supplemental front-impact air bag (NISSAN Advanced Air Bag System)
- Front seat-mounted side-impact supplemental air bag
- Roof-mounted curtain side-impact supplemental air bag
- Seat belt with pretensioner

Supplemental front-impact air bag system: The NISSAN Advanced Air Bag System can help cushion the impact force to the head and chest of the driver and front passenger in certain frontal collisions.

Front seat-mounted side-impact supplemental air bag system: This system can help cushion the impact force to the chest area of the driver and front passenger in certain side impact collisions. The side air bags are designed to inflate on the side where the vehicle is impacted.

Roof-mounted curtain side-impact supplemental air bag system: This system can help cushion the impact force to the head of occupants in front and rear outboard seating positions in certain side impact collisions. The curtain air bags are designed to inflate on the side where the vehicle is impacted.

These supplemental restraint systems are designed to **supplement** the crash protection provided by the driver and passenger seat belts and are **not a substitute** for them. Seat belts should always be correctly worn and the occupant seated a suitable distance away from the steering wheel, instrument panel and door finishers. (See “SEAT BELTS” earlier in this section for instructions and precautions on seat belt usage.)

The supplemental air bags operate only when the ignition switch is in the ON position.

After turning the ignition switch to the ON position, the supplemental air bag warning light illuminates. The supplemental air bag warning light will turn off after about 7 seconds if the systems are operational.

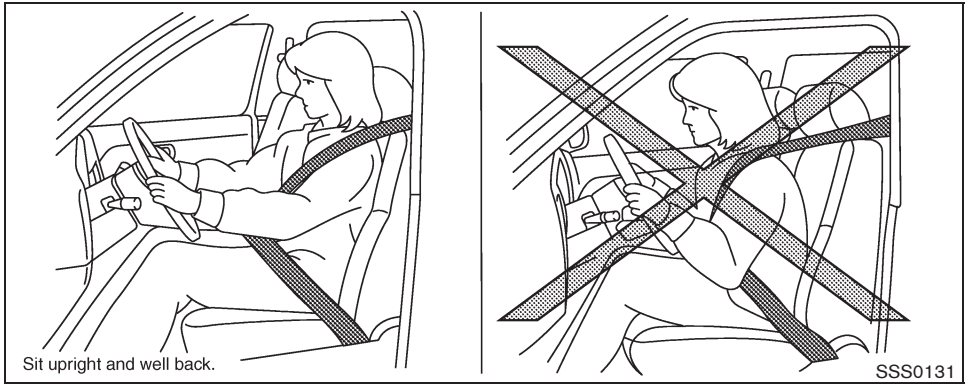

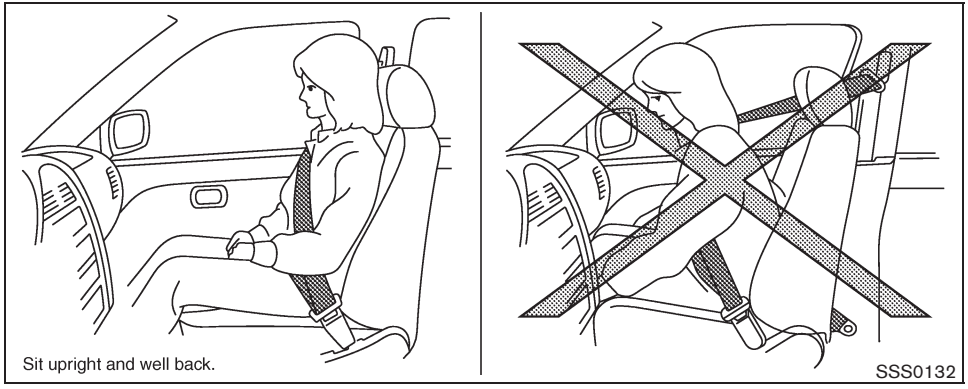

WARNING

- **The front air bags ordinarily will not inflate in the event of a side impact, rear impact, rollover, or lower severity frontal collision. Always wear your seat belts to help reduce the risk or severity of injury in various kinds of accidents.**
- **The front passenger air bag will not inflate if the passenger air bag status light is lit or if the front passenger seat is unoccupied. See "Front passenger air bag and status light" later in this section.**
- **The seat belts and the front air bags are most effective when you are sitting well back and upright in the seat with both feet on the floor. The front air bags inflate with great force. Even with the NISSAN Advanced Air Bag System, if you are unrestrained, leaning forward, sitting sideways or out of position in any way, you are at greater risk of injury or death in a crash. You may also receive serious or fatal injuries from the front air bag if you are up against it when it inflates. Always sit**

back against the seatback and as far-away as practical from the steering wheel or instrument panel. Always use the seat belts.

- The driver and front passenger seat belt buckles are equipped with sensors that detect if the seat belts are fastened. The Advanced Air Bag System monitors the severity of a collision and seat belt usage then inflates the air bags. Failure to properly wear seat belts can increase the risk or severity of injury in an accident.
- The front passenger seat is equipped with occupant classification sensors (weight sensors) that turn the front passenger air bag OFF under some conditions. This sensor is only used in this seat. Failure to be properly seated and wearing the seat belt can increase the risk or severity of injury in an accident. See “Front passenger air bag and status light” later in this section.
- Keep hands on the outside of the steering wheel. Placing them inside the steering wheel rim could increase the risk that they are injured if the front air bag inflates.

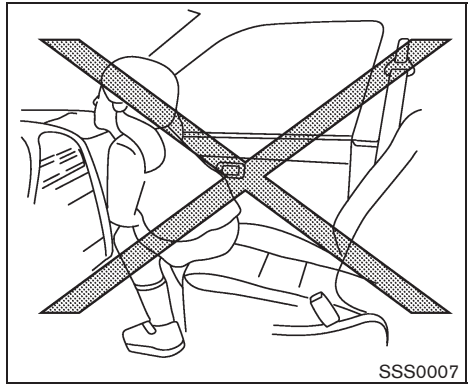
SSS0007

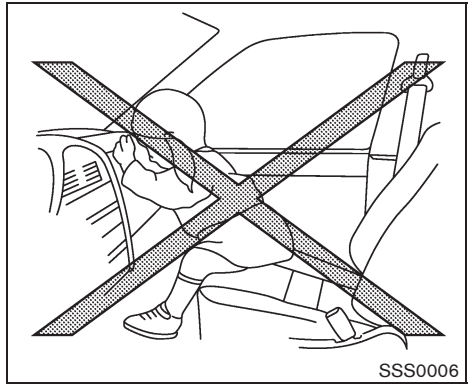
SSS0006

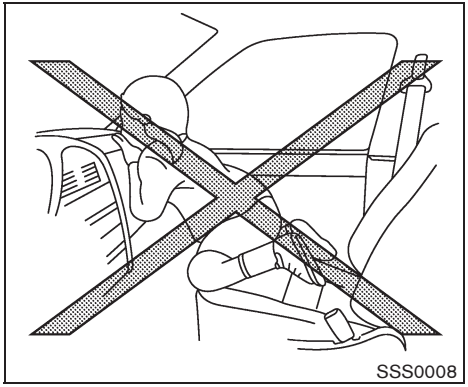
SSS0008

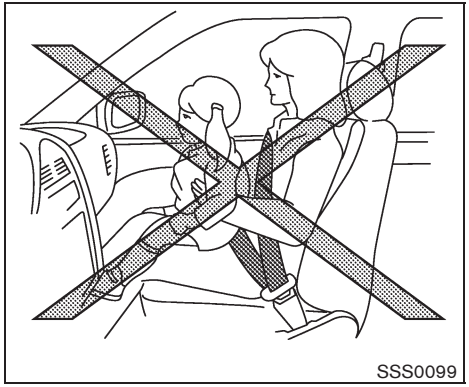
SSS0099

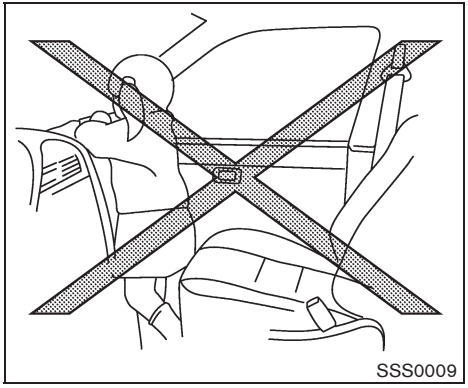
SSS0009

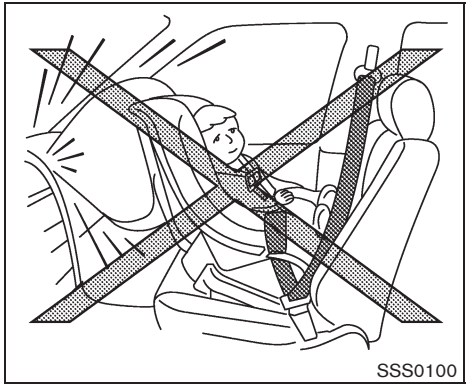
SSS0100

WARNING

- **Never let children ride unrestrained or extend their hands or face out of the window. Do not attempt to hold them in your lap or arms. Some examples of dangerous riding positions are shown in the illustrations.**
- **Children may be severely injured or killed when the front air bags, side air bags or curtain air bags inflate if they are not properly restrained. Pre-teens and children should be properly restrained in the rear seat, if possible.**
- **Even with the NISSAN Advanced Air Bag System, never install a rear-facing child restraint in the front seat. An inflating front air bag could seriously injure or kill your child. See “CHILD RESTRAINTS” earlier in this section for details.**

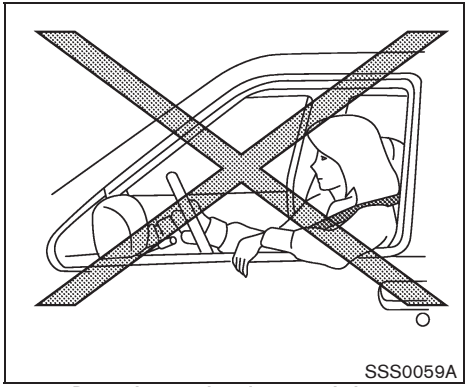

Do not lean against doors or windows.

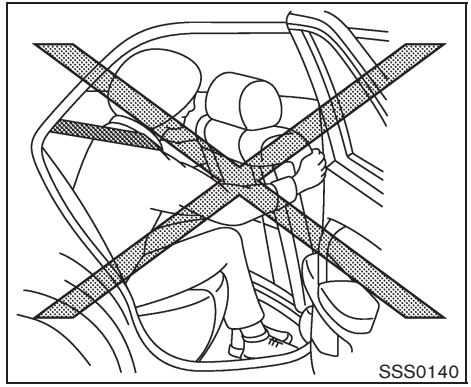

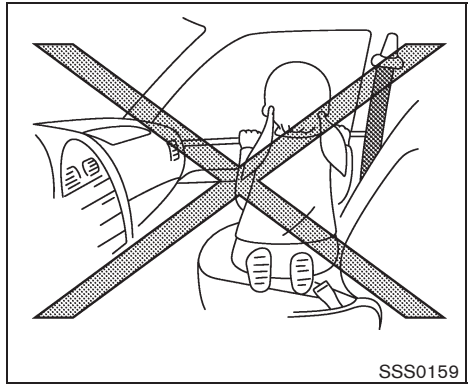

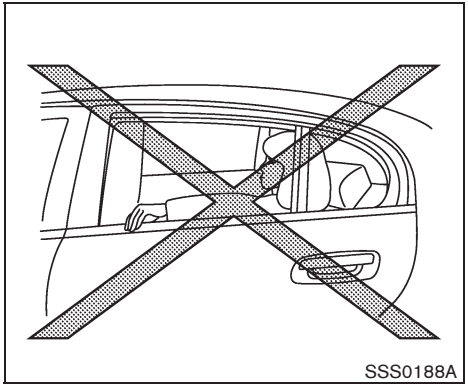

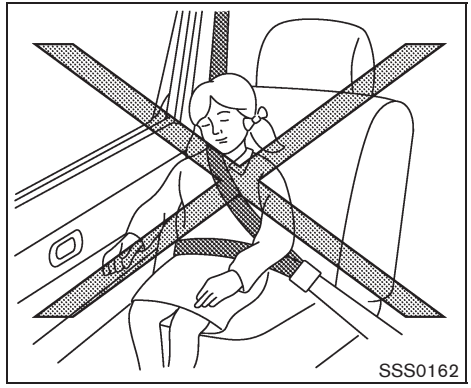

⚠ WARNING

Front seat-mounted side-impact supplemental air bags and roof-mounted curtain side-impact supplemental air bags:

- **The side air bags and curtain air bags ordinarily will not inflate in the event of a frontal impact, rear impact or lower severity side collision. Always wear your seat belts to help reduce the risk or severity of injury in various kinds of accidents.**
- **The seat belts, the side air bags and**

curtain air bags are most effective when you are sitting well back and upright in the seat. The side air bag and curtain air bag inflate with great force. Do not allow anyone to place their hand, leg or face near the side air bag on the side of the seatback of the front seat or near the side roof rails. Do not allow anyone sitting in the front seats or rear outboard seats to extend their hand out of the window or lean against the door. Some examples of dangerous riding positions are shown in the previous illustrations.

- **When sitting in the rear seat, do not hold onto the seatback of the front seat. If the side air bag inflates, you may be seriously injured. Be especially careful with children, who should always be properly restrained. Some examples of dangerous riding positions are shown in the illustrations.**
- **Do not use seat covers on the front seatbacks. They may interfere with side air bag inflation.**

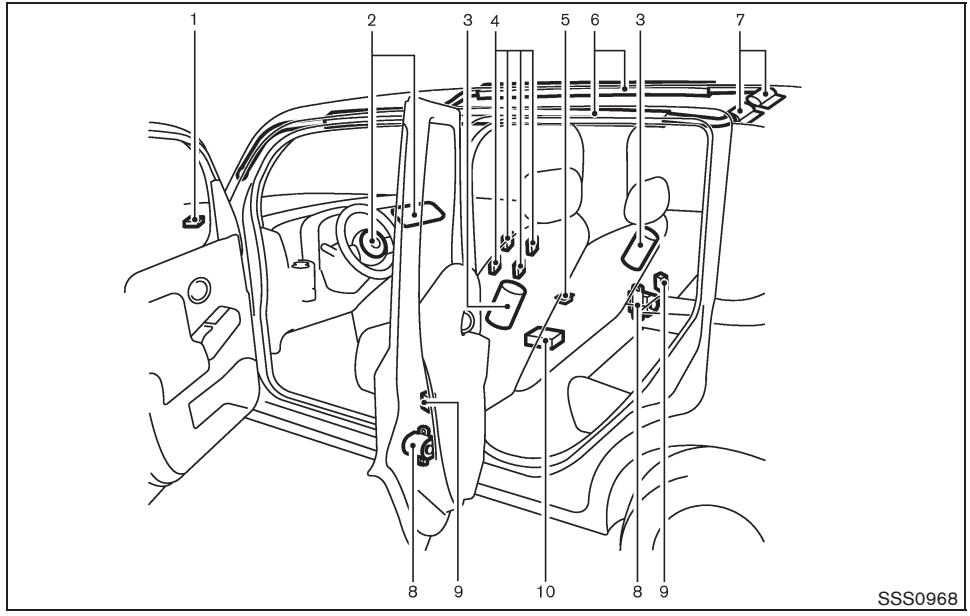

1. Crash zone sensor
2. Supplemental front-impact air bag modules
3. Front seat-mounted side-impact supplemental air bag modules
4. Occupant classification sensors (weight sensors)
5. Occupant detection system control unit
6. Roof-mounted curtain side-impact supplemental air bags modules
7. Roof-mounted curtain side-impact supplemental air bag inflators
8. Seat belt pretensioners
9. Satellite sensors
10. Air bag Control Unit (ACU)

NISSAN ADVANCED AIR BAG SYSTEM (front seats)

WARNING

To ensure proper operation of the passenger's advanced air bag system, please observe the following items.

- **Do not allow a passenger in the rear seat to push or pull on the seatback pocket.**
- **Do not place heavy loads heavier than 2.2 lb (4 kg) on the seatback, headrest or in the seatback pocket.**
- **Do not store luggage behind the seat that can press into the seatback.**
- **Confirm the operating condition with the front passenger air bag status light.**
- **If you notice that the front passenger air bag status light is not operating in accordance with the above description, please take your vehicle to your NISSAN dealer to check the passenger seat advanced air bag system.**
- **Until you have confirmed with your dealer that your passenger seat advanced air bag is working properly, position the occupants in the rear seating positions.**

This vehicle is equipped with the NISSAN Advanced Air Bag System for the driver and front passenger seats. This system is designed to meet certification requirements under U.S. regulations. It is also permitted in Canada. **However, all of the information, cautions and warnings in this manual still apply and must be followed.**

The driver supplemental front-impact air bag is located in the center of the steering wheel. The passenger supplemental front-impact air bag is mounted in the instrument panel above the glove box. The front air bags are designed to inflate in higher severity frontal collisions, although they may inflate if the forces in another type of collision are similar to those of a higher severity frontal impact. They may not inflate in certain frontal collisions. Vehicle damage (or lack of it) is not always an indication of proper front air bag operation.

The NISSAN Advanced Air Bag System has dual stage air bag inflators. The system monitors information from the Air bag Control Unit (ACU), seat belt buckle sensors and the occupant classification sensors (weight sensors). Inflator operation is based on the severity of a collision and seat belt usage for the driver. For the front passenger, the occupant classification sensors are also monitored. Based on information from the sensors, only one front air bag may inflate in a crash, depending on the crash severity and whether the front occupants are belted or unbelted. Additionally, the front passenger air bag may be automatically turned OFF under some conditions, depending on the information provided by the occupant classification sensors. If the front passenger air bag is OFF, the passenger air bag status light will be illuminated (if the seat is unoccupied, the light will not be illuminated, but the air bag will be off). (See "Front passenger air bag and status light" later in this section for further details.) One front air bag inflating does not indicate improper performance of the system.

If you have any questions about your air bag system, contact NISSAN or a NISSAN dealer. If you are considering modification of your vehicle due to a disability, you may also contact NISSAN. Contact information is contained in the front of this Owner's Manual.

When a front air bag inflates, a fairly loud noise may be heard, followed by release of smoke. This smoke is not harmful and does not indicate a fire. Care should be taken not to inhale it, as it may cause irritation and choking. Those with a history of a breathing condition should get fresh air promptly.

Front air bags, along with the use of seat belts, help to cushion the impact force on the head and chest of the front occupants. They can help save lives and reduce serious injuries. However, an inflating front air bag may cause facial abrasions or other injuries. Front air bags do not provide restraint to the lower body.

Even with NISSAN Advanced Air Bags, seat belts should be correctly worn and the driver and passenger seated upright as far as practical away from the steering wheel or instrument panel. The front air bags inflate quickly in order to help protect the front occupants. Because of this, the force of the front air bag inflating can increase the risk of injury if the occupant is too close to, or is against, the air bag module during inflation.

The front air bags deflate quickly after a collision.

The front air bags operate only when the ignition switch is in the ON position.

After pushing the ignition switch to the ON position, the supplemental air bag warning light illuminates. The supplemental air bag warning light will turn off after about 7 seconds if the system is operational.

Front passenger air bag status light

Front passenger air bag and status light

WARNING

The front passenger air bag is designed to automatically turn OFF under some conditions. Read this section carefully to learn how it operates. Proper use of the seat, seat belt and child restraints is necessary for most effective protection. Failure to follow all instructions in this manual concerning the use of seats, seat belts and child restraints can increase the risk or severity of injury in an accident.

Status light:

The front passenger air bag status light is located on the instrument panel. The light operates as follows:

- Unoccupied passenger seat: The light is OFF and the front passenger air bag is OFF and will not inflate in a crash.
- Passenger's seat occupied by a small adult, child or child restraint as outlined in this section: The light illuminates to indicate that the front passenger air bag is OFF and will not inflate in a crash.
- Occupied passenger seat and the passenger meets the conditions outlined in this section: The light is OFF to indicate that the front passenger air bag is operational.

Front passenger air bag:

The front passenger air bag is designed to automatically turn OFF when the vehicle is operated under some conditions as described below as permitted by U.S. regulations. If the front passenger air bag is OFF, it will not inflate in a crash. The driver air bag and other air bags in your vehicle are not part of this system.

The purpose of the regulation is to help reduce the risk of injury or death from an inflating air bag to certain front passenger seat occupants, such

as children, by requiring the air bag to be automatically turned OFF.

The occupant classification sensors (weight sensors) are on the seat cushion frame under the front passenger seat and are designed to detect an occupant and objects on the seat. For example, if a child is in the front passenger seat, the Advanced Air Bag System is designed to turn the passenger air bag OFF in accordance with the regulations. Also, if a child restraint of the type specified in the regulations is on the seat, the occupant classification sensors can detect it and cause the air bag to turn OFF.

Front passenger seat adult occupants who are properly seated and using the seat belt as outlined in this manual should not cause the passenger air bag to be automatically turned OFF. For small adults it may be turned OFF, however, if the occupant does not sit in the seat properly (for example, by not sitting upright, by sitting on an edge of the seat, or by otherwise being out of position), this could cause the sensors to turn the air bag OFF. Always be sure to be seated and wearing the seat belt properly for the most effective protection by the seat belt and supplemental air bag.

NISSAN recommends that pre-teens and children be properly restrained in a rear seat. NISSAN also recommends that appropriate child restraints and booster seats be properly installed in a rear seat. If this is not possible, the occupant classification sensors are designed to operate as described above to turn the front passenger air bag OFF for specified child restraints. Failing to properly secure child restrains and to use the Automatic Locking Retractor (ALR) mode (child restraint mode) may allow the restraint to tip or move in an accident or sudden stop. This can also result in the passenger air bag inflating in a crash instead of being OFF. (See “CHILD RESTRAINTS” earlier in this section for proper use and installation.)

If the front passenger seat is not occupied, the passenger air bag is designed not to inflate in a crash. However, heavy objects placed on the seat could result in air bag inflation, because of the object being detected by the occupant classification sensors. Other conditions could also result in air bag inflation, such as if a child is standing on the seat, or if two children are on the seat, contrary to the instructions in this manual. Always be sure that you and all vehicle occupants are seated and restrained properly.

Using the passenger air bag status light, you can monitor when the front passenger air bag is automatically turned OFF with the seat occupied. The light will not illuminate when the front passenger seat is unoccupied.

If an adult occupant is in the seat but the passenger air bag status light is illuminated (indicating that the air bag is OFF), it could be that the person is a small adult, or is not sitting on the seat properly.

If a child restraint must be used in the front seat, the passenger air bag status light may or may not be illuminated, depending on the size of the child and the type of child restraint being used. If the air bag status light is not illuminated (indicating that the air bag might inflate in a crash), it could be that the child restraint or seat belt is not being used properly. Make sure that the child restraint is installed properly, the seat belt is used properly and the occupant is positioned properly. If the air bag status light is not illuminated, reposition the occupant or child restraint in a rear seat.

If the passenger air bag status light will not illuminate even though you believe that the child restraint, the seat belts and the occupant are properly positioned, the system may be sensing an unoccupied seat (in which case the air bag is OFF). Your NISSAN dealer can check that the system is OFF by using a special tool. However, until you have confirmed with your dealer that your air bag is working properly, reposition the occupant or child restraint in a rear seat.

The air bag system and passenger air bag status light will take a few seconds to register a change in the passenger seat status. However, if the seat becomes unoccupied, the air bag status light will remain off.

If a malfunction occurs in the front passenger air bag system, the supplemental air bag warning light , located in the meter and gauges area, will blink. Have the system checked by a NISSAN dealer.

Other supplemental front-impact air bag precautions

WARNING

- **Do not place any objects on the steering wheel pad or on the instrument panel. Also, do not place any objects between any occupant and the steering wheel or instrument panel. Such objects may become dangerous projectiles and cause injury if the front air bags inflate.**
- **Do not place objects with sharp edges on the seat. Also, do not place heavy objects on the seat that will leave permanent impressions in the seat. Such objects can damage the seat or occupant classification sensors (weight sensors). This can affect the operation of the air bag system and result in serious personal injury.**
- **Do not use water or acidic cleaners (hot steam cleaners) on the seat. This can damage the seat or occupant classification sensors. This can also affect the operation of the air bag system and result in serious personal injury.**
- **Immediately after inflation, several front air bag system components will be hot. Do not touch them; you may severely burn yourself.**
- **No unauthorized changes should be made to any components or wiring of the supplemental air bag system. This is to prevent accidental inflation of the supplemental air bag or damage to the supplemental air bag system.**
- **Do not make unauthorized changes to your vehicle's electrical system, suspension system or front end structure. This could affect proper operation of the front air bag system.**
- **Tampering with the front air bag system may result in serious personal injury. Tampering includes changes to the steering wheel and the instrument panel assembly by placing material over the steering wheel pad and above the instrument panel or by installing additional trim material around the air bag system.**
- **Modifying or tampering with the front passenger seat may result in serious personal injury. For example, do not change the front seats by placing material on the seat cushion or by installing additional trim material, such as seat covers, on the seat that is not specifically designed to assure proper air bag operation. Additionally, do not stow any objects under the front passenger seat or the seat cushion and seatback. Such objects may interfere with the proper operation of the occupant classification sensors.**
- **No unauthorized changes should be made to any components or wiring of the seat belt system. This may affect the front air bag system. Tampering with the seat belt system may result in serious personal injury.**
- **Work on and around the front air bag system should be done by a NISSAN dealer. Installation of elec-**

trical equipment should also be done by a NISSAN dealer. The Supplemental Restraint System (SRS) wiring harnesses* should not be modified or disconnected. Unauthorized electrical test equipment and probing devices should not be used on the air bag system.

- **A cracked windshield should be replaced immediately by a qualified repair facility. A cracked windshield could affect the function of the supplemental air bag system.**

***The SRS wiring harness connectors are yellow and orange for easy identification.**

When selling your vehicle, we request that you inform the buyer about the front air bag system and guide the buyer to the appropriate sections in this Owner's Manual.

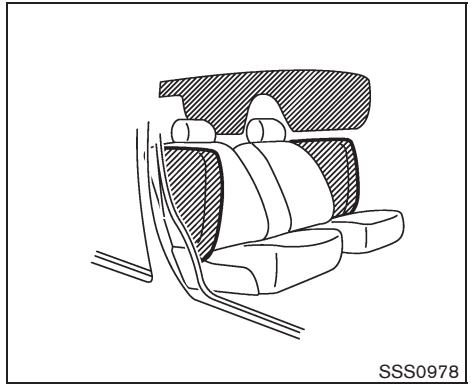

FRONT SEAT-MOUNTED SIDE-IMPACT SUPPLEMENTAL AIR BAG AND ROOF-MOUNTED CURTAIN SIDE-IMPACT SUPPLEMENTAL AIR BAG SYSTEMS

The side air bags are located in the outside of the seatback of the front seats. The curtain air bags are located in the side roof rails. These systems are designed to meet voluntary guidelines to help reduce the risk of injury to out-of-position occupants. **However, all of the information, cautions and warnings in this manual still apply and must be followed.** The side air bags and curtain air bags are designed to inflate in higher severity side collisions, although they may inflate if the forces in another type of collision are similar to those of a higher severity side impact. They are designed to inflate on the side where the vehicle is impacted. They may not inflate in certain side collisions on the side where the vehicle is impacted.

Vehicle damage (or lack of it) is not always an indication of proper side air bag and curtain air bag operation.

When the side air bags and curtain air bags inflate, a fairly loud noise may be heard, followed by release of smoke. This smoke is not harmful and does not indicate a fire. Care should be taken not to inhale it, as it may cause irritation and choking. Those with a history of a breathing condition should get fresh air promptly.

Side air bags, along with the use of seat belts, help to cushion the impact force on the chest and pelvic area of the front occupants. Curtain air bags help to cushion the impact force to the head of occupants in the front and rear outboard seating positions. They can help save lives and reduce serious injuries. However, side air bags and curtain air bags may cause abrasions or other injuries. Side air bags and curtain air bags do not provide restraint to the lower body.

The seat belts should be correctly worn and the driver and passenger seated upright as far as practical away from the side air bags. Rear seat

passengers should be seated as far away as practical from the door finishers and side roof rails. The side air bags and curtain air bags inflate quickly in order to help protect the occupants in the outboard seating positions. Because of this, the force of the side air bags and curtain air bags inflating can increase the risk of injury if the occupant is too close to, or is against, these air bag modules during inflation. The side air bags and curtain air bags will deflate quickly after the collision is over.

The side air bags and curtain air bags operate only when the ignition switch is in the ON position.

After turning the ignition switch to the ON position, the supplemental air bag warning light illuminates. The supplemental air bag warning light will turn off after about 7 seconds if the systems are operational.

WARNING

- **Do not place any objects near the seatback of the front seats. Also, do not place any objects (an umbrella, bag, etc.) between the front door finisher and the front seat. Such objects may become dangerous projectiles and cause injury if a side air bag inflates.**
- **Right after inflation, several side air bag and curtain air bag system components will be hot. Do not touch them; you may severely burn yourself.**
- **No unauthorized changes should be made to any components or wiring of the side air bag and curtain air bag systems. This is to prevent damage to or accidental inflation of the side air bag and curtain air bag systems.**
- **Do not make unauthorized changes to your vehicle's electrical system, suspension system or side panel. This could affect proper operation of the side air bag and curtain air bag systems.**
- **Tampering with the side air bag system may result in serious personal injury. For example, do not change the front seats by placing material near the seatbacks or by installing additional trim material, such as seat covers, around the side air bag.**
- **Work around and on the side air bag and curtain air bag systems should be done by a NISSAN dealer. Installation of electrical equipment should also be done by a NISSAN dealer. The Supplemental Restraint System (SRS) wiring harnesses* should not be modified or disconnected. Unauthorized electrical test equipment and probing devices should not be used on the side air bag and curtain supplemental air bag systems.**

***The SRS wiring harnesses connectors are yellow and orange for easy identification.**

When selling your vehicle, we request that you inform the buyer about the side air bag and curtain air bag systems and guide the buyer to the appropriate sections in this Owner's Manual.

SEAT BELTS WITH PRETENSIONERS (front seats)

WARNING

- **The pretensioners cannot be reused after activation. They must be replaced together with the retractor and buckle as a unit.**
- **If the vehicle becomes involved in a frontal collision but a pretensioner is not activated, be sure to have the pretensioner system checked and, if necessary, replaced by a NISSAN dealer.**
- **No unauthorized changes should be made to any components or wiring of the pretensioner system. This is to prevent damage to or accidental activation of the pretensioners. Tampering with the pretensioner system may result in serious personal injury.**
- **Work around and on the pretensioner system should be done by a NISSAN dealer. Installation of electrical equipment should also be done by a NISSAN dealer. Unauthorized electrical test equipment and probing devices should not be used on the pretensioner system.**
- **If you need to dispose of a pretensioner or scrap the vehicle, contact a NISSAN dealer. Correct pretensioner disposal procedures are set forth in the appropriate NISSAN Service Manual. Incorrect disposal procedures could cause personal injury.**

The pretensioner system activates in conjunction with the front air bag system. The pretensioner system also activates with the curtain air bags in certain types of rollover collisions or near rollovers. Working with the seat belt retractor, it helps tighten the seat belt when the vehicle becomes involved in certain types of collisions, helping to restrain front seat occupants.

The pretensioner is encased with the seat belt retractor. These seat belts are used the same way as conventional seat belts.

When a pretensioner activates, smoke is released and a loud noise may be heard. The smoke is not harmful and does not indicate a fire. Care should be taken not to inhale it, as it may cause irritation and choking. Those with a history of a breathing condition should get fresh air promptly.

After pretensioner activation, load limiters allow the seat belt to release webbing (if necessary) to reduce forces against the chest.

If any abnormality occurs in the pretensioner system, the supplemental air bag warning light will not come on, will flash intermittently or will turn on for 7 seconds and remain on after the ignition switch has been placed in the ON position. In this case, the pretensioner system may not function properly. They must be checked and repaired. Take your vehicle to the nearest NISSAN dealer.

When selling your vehicle, we request that you inform the buyer about the pretensioner system and guide the buyer to the appropriate sections in this Owner's Manual.

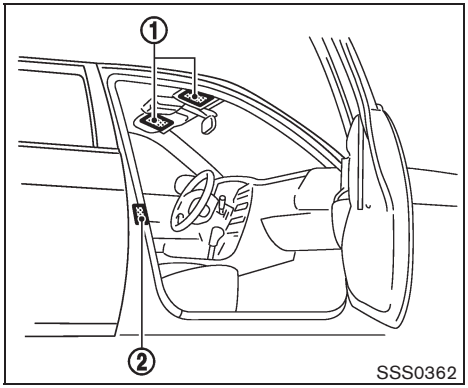

SUPPLEMENTAL AIR BAG WARNING LABELS

Warning labels about the supplemental front-impact air bag and front seat-mounted side-impact supplemental air bag systems are placed in the vehicle as shown in the illustration.

① SRS air bag

The warning labels are located on the surface of the sun visors.

② SRS side air bags

The warning label is located on the side of the passenger's side center pillar.

SUPPLEMENTAL AIR BAG WARNING LIGHT

The supplemental air bag warning light, displaying in the instrument panel, monitors the circuits of the supplemental front-impact air bag, front seat-mounted side-impact supplemental air bag, roof-mounted curtain side-impact supplemental air bag and seat belt pretensioner systems. The monitored circuits include Air bag Control Unit (ACU), crash zone sensor, satellite sensors, occupant classification system, front air bag modules, side air bag modules, curtain air bag modules, pretensioners and all related wiring.

When the ignition switch is in the ON position, the supplemental air bag warning light illuminates for about 7 seconds and then turns off. This means the system is operational.

If any of the following conditions occur, the front air bag, side air bag, curtain air bag and pretensioner systems need servicing:

- The supplemental air bag warning light remains on after approximately 7 seconds.
- The supplemental air bag warning light flashes intermittently.
- The supplemental air bag warning light does not come on at all.

Under these conditions, the front air bag, side air bag, curtain air bag and pretensioner systems may not operate properly. They must be checked and repaired. Take your vehicle to the nearest NISSAN dealer.

WARNING

If the supplemental air bag warning light is on, it could mean that the front air bag, side air bag, curtain air bag and/or pretensioner systems will not operate in an accident. To help avoid injury to yourself or others, have your vehicle checked by a NISSAN dealer as soon as possible.

REPAIR AND REPLACEMENT PROCEDURE

The front air bags, side air bags, curtain air bags and pretensioners are designed to activate on a one-time-only basis. As a reminder, unless it is damaged, the supplemental air bag warning light will remain illuminated after inflation has occurred. Repair and replacement of these systems should be done only by a NISSAN dealer.

When maintenance work is required on the vehicle, the front air bags, side air bags, curtain air bags and pretensioners and related parts should be pointed out to the person performing the maintenance. The ignition switch should always be in the LOCK position when working under the hood or inside the vehicle.

WARNING

- **Once a front air bag, side air bag or curtain air bag has inflated, the air bag module will not function again and must be replaced. Additionally, if any of the front air bags inflate, the activated pretensioners must also be replaced. The air bag module and pretensioner should be replaced by a NISSAN dealer. The air bag modules and pretensioner system cannot be repaired.**
- **The front air bag, side air bag and curtain air bag systems, and pretensioner system should be inspected by a NISSAN dealer if there is any damage to the front end or side portion of the vehicle.**
- **If you need to dispose of a supplemental air bag or pretensioner or scrap the vehicle, contact a NISSAN dealer. Correct supplemental air bag and pretensioner system disposal procedures are set forth in the appropriate NISSAN Service Manual. Incorrect disposal procedures could cause personal injury.**

MEMO

MEMO

2 Instruments and controls

Cockpit 2-2
Instrument panel 2-3
Meters and gauges 2-4
Speedometer and odometer 2-5
Tachometer 2-6
Engine coolant temperature gauge 2-6
Fuel gauge 2-7
Vehicle information display 2-7
Outside air temperature (if so equipped) 2-7
Continuously Variable Transmission (CVT) position indicator (if so equipped) 2-8
Trip computer 2-8
Warning/indicator lights and audible reminders 2-10
Checking bulbs 2-10
Warning lights 2-10
Indicator lights 2-15
Audible reminders 2-17
Security systems 2-17
Vehicle security system 2-17
NISSAN Vehicle Immobilizer System 2-19
Windshield wiper and washer switch 2-20
Rear window wiper and washer switch 2-22
Rear window and outside mirror defroster switch 2-23
Headlight and turn signal switch 2-23
Headlight switch 2-23
Turn signal switch 2-26
Fog light switch (if so equipped) 2-27
Hazard warning flasher switch 2-27
Horn 2-28
Vehicle Dynamic Control (VDC) OFF switch 2-28
Clock (if so equipped) 2-28
Adjusting the time 2-29
Resetting the time 2-30
Power outlet 2-30
Storage 2-31
Cup holders 2-31
Glove box 2-33
Rear pillar pocket 2-33
Cargo cover (if so equipped) 2-34
Luggage hooks 2-35
Utility hooks (if so equipped) 2-36
Windows 2-36
Power windows 2-36
Interior lights 2-39
Map lights (if so equipped) 2-39
Map light control switch (if so equipped) 2-39
Ceiling light 2-40
Cargo light (if so equipped) 2-41

COCKPIT

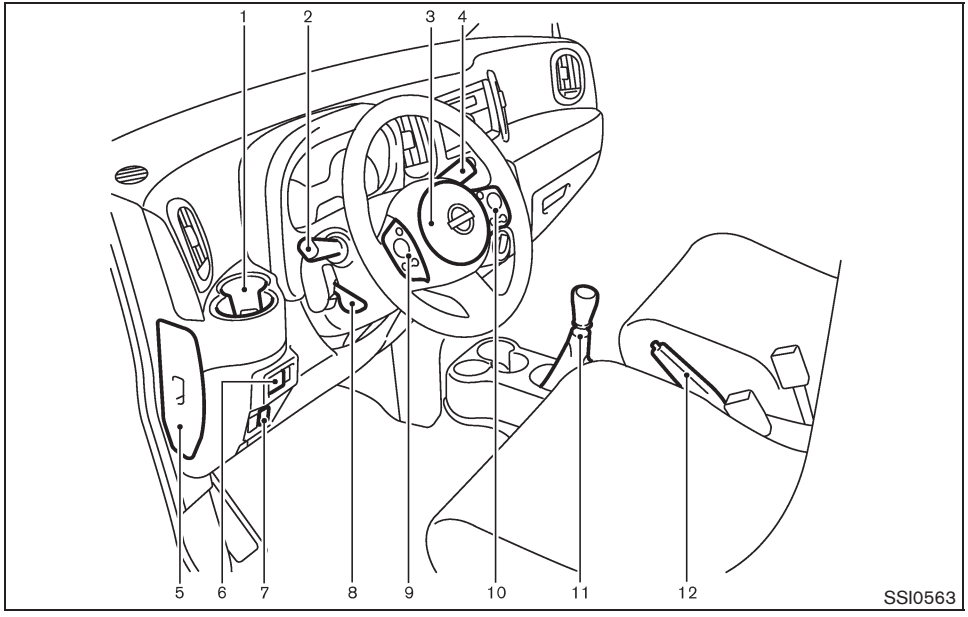

1. Front cup holders
2. Headlight, fog light and turn signal switch
3. Steering wheel
   — Horn
   — Driver's supplemental front-impact air bag
4. Wiper and washer switch
5. Fuse box cover
6. Outside mirror remote control switch
7. Vehicle Dynamic Control (VDC) OFF switch
8. Tilting steering wheel lever
9. Steering-wheel-mounted controls (left side)*
   — Audio control*
   — Bluetooth® Hands-Free Phone System control*
10. Steering-wheel-mounted controls (right side)*
    — Cruise control switches*
11. Selector lever or Shift lever
    — Continuously Variable Transmission (CVT)
    — Manual Transmission (MT)
12. Parking brake

*: if so equipped

INSTRUMENT PANEL

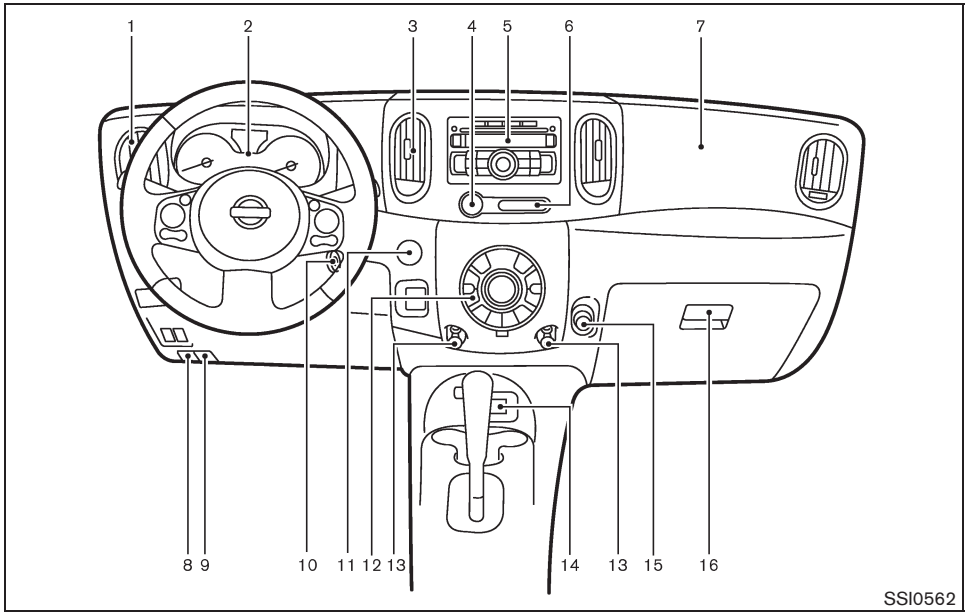

1. Side ventilator
2. Meters and gauges
3. Center ventilator
4. Hazard warning flasher switch
5. Audio system*
   — Clock*
6. Front passenger air bag status light
7. Front passenger supplemental air bag
8. Fuel-filler door release handle
9. Hood release handle
10. Ignition switch (models without Intelligent Key system)
11. Push-button ignition switch (models with Intelligent Key system)
12. Heater/air conditioner* control
    — Rear window and outside mirror* defroster switch
13. Utility hooks*
14. iPod® connector*
15. Power outlet
16. Glove box

*: if so equipped

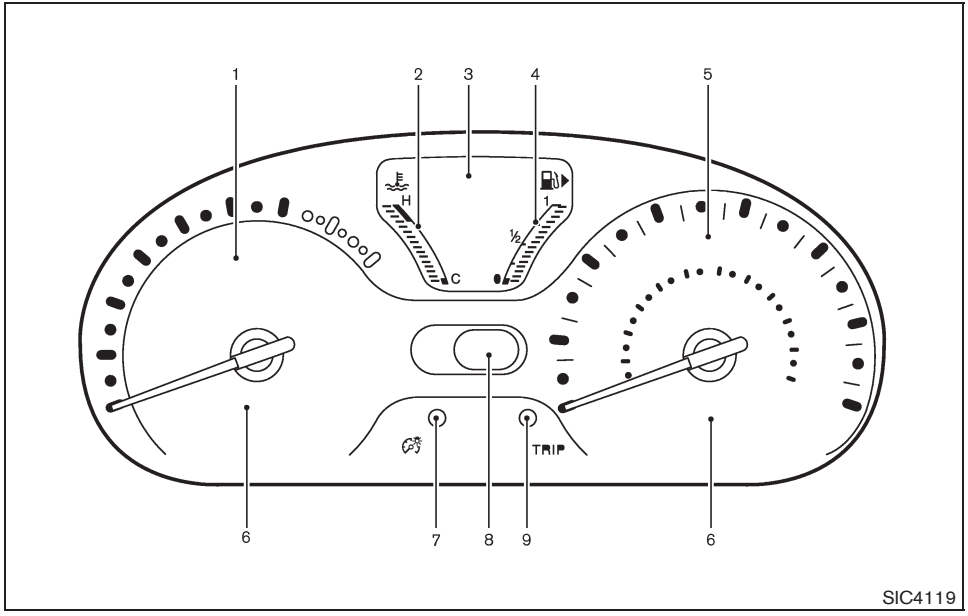

1. Tachometer
2. Engine coolant temperature gauge
3. Vehicle information display
   — Odometer/twin trip odometer
   — Trip computer
   — Outside air temperature*
4. Fuel gauge
5. Speedometer
6. Warning/indicator lights
7. Instrument brightness control knob
8. Continuously Variable Transmission (CVT) position indicator*
9. RESET switch for trip odometer/Trip computer mode switch

*: if so equipped

The needle indicators may move slightly after the ignition switch is placed in the OFF or LOCK position. This is not a malfunction.

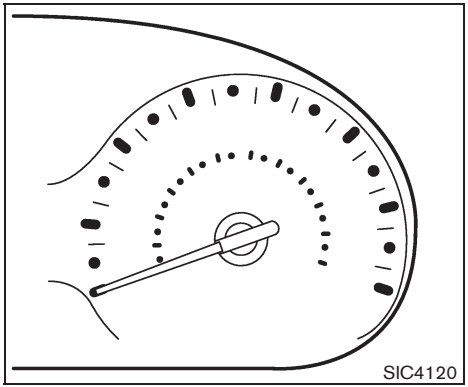

Speedometer

SPEEDOMETER AND ODOMETER

Speedometer

The speedometer indicates vehicle speed in miles per hour (MPH) and kilometers per hour (km/h).

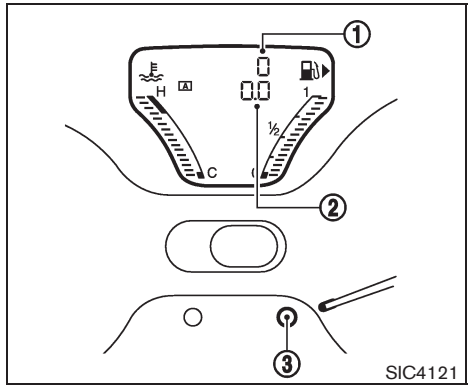

Odometer/twin trip odometer

Odometer/twin trip odometer

The odometer ① /twin trip odometer ② are displayed when the ignition switch is in the ON position.

The odometer records the total distance the vehicle has been driven.

The twin trip odometer records the distance of individual trips.

Changing the display:

Pushing the reset switch ③ located on the meter panel changes the display as follows:

TRIP A → TRIP B → Trip computer mode → TRIP A

For trip computer information, see “TRIP COMPUTER” later in this section.

Resetting the trip odometer:

Pushing the reset switch ③ for approximately 1 second resets the trip odometer to zero.

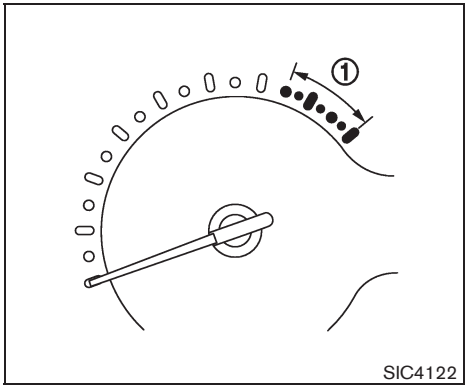

TACHOMETER

The tachometer indicates engine speed in revolutions per minute (RPM). **Do not rev the engine into the red zone ①.**

⚠ CAUTION

When engine speed approaches the red zone, shift to a higher gear or reduce engine speed. Operating the engine in the red zone may cause serious engine damage.

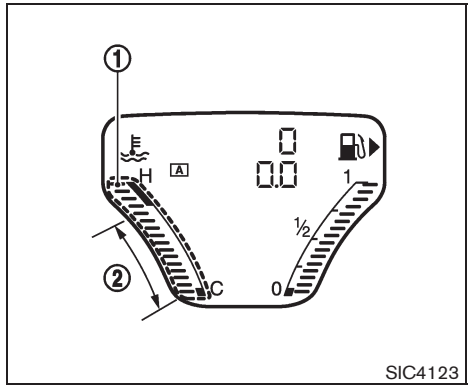

ENGINE COOLANT TEMPERATURE GAUGE

The gauge ① indicates the engine coolant temperature.

The engine coolant temperature is within the normal range when the gauge is within the zone ② shown in the illustration.

The engine coolant temperature varies with the outside air temperature and driving conditions.

⚠ CAUTION

If the gauge indicates engine coolant temperature near the hot (H) end of the normal range, reduce vehicle speed to decrease temperature. If gauge is over the normal range, stop the vehicle as soon as safely possible. If the engine is overheated, continued operation of the vehicle may seriously damage the engine. See "IF YOUR VEHICLE OVERHEATS" in the "6. In case of emergency" section for immediate action required.

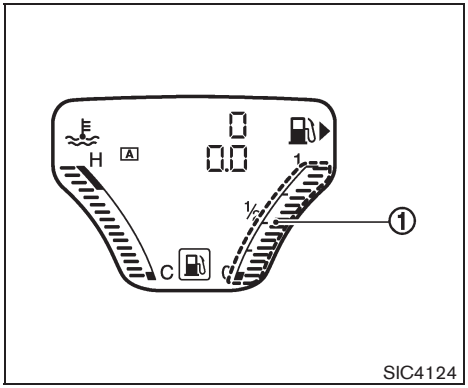

SIC4124

FUEL GAUGE

The gauge ① indicates the **approximate** fuel level in the tank.

The gauge may move slightly during braking, turning, acceleration, or going up or down hills.

Refill the fuel tank before the gauge registers 0 (empty).

The low fuel warning light illuminates when the amount of fuel in the tank is getting low. Refuel as soon as it is convenient, preferably before the gauge reaches 0. There will be a small reserve of fuel in the tank when the fuel gauge reaches 0.

The indicates that the fuel-filler door is located on the front passenger's side of the vehicle.

CAUTION

- **If the vehicle runs out of fuel, the SERVICE ENGINE SOON malfunction indicator light (MIL) may come on. Refuel as soon as possible. After a few driving trips, the SERVICE ENGINE SOON light should turn off. If the light remains on after a few driving trips, have the vehicle inspected by a NISSAN dealer.**
- **For additional information, see "Malfunction Indicator Light (MIL)" later in this section.**

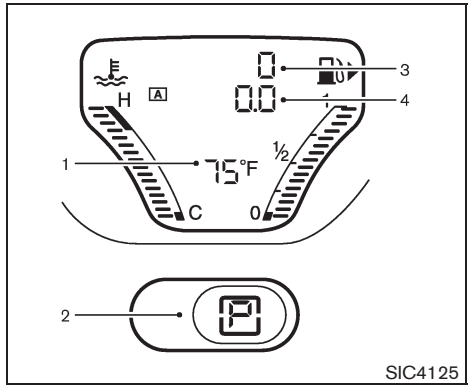

SIC4125

VEHICLE INFORMATION DISPLAY

When the ignition switch is placed in the ON position, the vehicle information display shows the following information:

1. Outside air temperature (if so equipped)
2. Continuously Variable Transmission (CVT) position indicator (if so equipped)
3. Odometer/Instrument brightness control display
4. Twin trip odometer/Trip computer

OUTSIDE AIR TEMPERATURE (if so equipped)

The outside air temperature is displayed in °F or °C.

When the outside air temperature becomes 37°F (3°C) or lower, the outside air temperature display blinks to give a warning. The display will stop blinking after 1 minute or when the outside air temperature becomes 39°F (4°C) or above.

The display may differ from the actual outside temperature displayed on various signs or billboards.

CONTINUOUSLY VARIABLE TRANSMISSION (CVT) POSITION INDICATOR (if so equipped)

The Continuously Variable Transmission (CVT) position indicator indicates the selector lever position when the ignition switch is in the ON position.

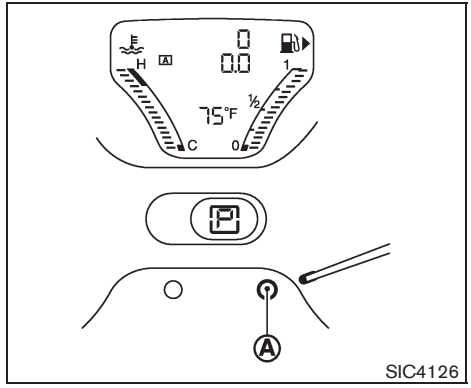

TRIP COMPUTER

The switch for the trip computer is located on the meter panel.

When the ignition switch is placed in the ON position, modes of the trip computer can be selected by pushing the trip computer mode switch Ⓐ .

Each time the trip computer mode switch Ⓐ is pushed, the display will change as follows:

(TRIP A → TRIP B) → Current fuel consumption → Distance to empty (dte) → Average fuel consumption → Average speed → Elapsed time (Canada only) → Maintenance information (Canada only) (→ TRIP A)

Current fuel consumption

The current fuel consumption mode shows the current fuel consumption.

Distance to empty (dte — mls or km)

The distance to empty (dte) mode provides you with an estimation of the distance that can be driven before refueling. The dte is constantly being calculated, based on the amount of fuel in the fuel tank and the actual fuel consumption.

The display is updated every 30 seconds.

The dte mode includes a low range warning feature. When the fuel level is low, the dte mode is automatically selected and the dte display will blink. Push the trip computer mode switch Ⓐ to return to the mode that was selected before the warning occurred.

When the fuel level drops even lower, the dte display will change to “----”.

- If the amount of fuel added is small, the display just before the ignition switch is turned off may continue to be displayed.
- When driving uphill or rounding curves, the fuel in the tank shifts, which may momentarily change the display.

Average fuel consumption (mpg or l (liter)/100 km)

The average fuel consumption mode shows the average fuel consumption since the last reset. Resetting is done by pushing the trip computer mode switch Ⓐ for approximately 1 second.

The display is updated every 30 seconds. At about the first 1/3 mile (500 m) after a reset, the display shows "---".

Average speed (mph or km/h)

The average speed mode shows the average vehicle speed since the last reset. Resetting is done by pushing the trip computer mode switch Ⓐ for approximately 1 second.

The display is updated every 30 seconds. The first 30 seconds after a reset, the display shows "---".

Elapsed time (Canada only)

The elapsed time mode shows the time since the last reset. The displayed time can be reset by pushing the trip computer mode switch Ⓐ for approximately 1 second.

Resetting displays

When the average fuel consumption, average speed, elapsed time or TRIP B is displayed, push the trip computer mode switch Ⓐ for longer than 3 seconds. The average fuel consumption, average speed, elapsed time and trip odometer (TRIP B only) displays will be reset at the same time.

Maintenance information (Canada only)

When the ignition switch is placed in the ON position, maintenance information (the wrench symbol 🔧 and distance to change a maintenance item) comes on for about 5 seconds and then turns off.

The wrench symbol 🔧 appears when the set distance comes for changing an item, such as engine oil.

To set the distance to change an item:

1. Place the ignition switch in the ON position.

   Push the trip computer mode switch Ⓐ for 3 seconds while the wrench symbol 🔧 and maintenance information are displayed. The symbol and distance display will start flashing and the display shows the current interval.

2. Push the switch Ⓐ to increase the interval distance.

   Each step increases the interval distance by 1,000 km (500 miles). The interval distance can be set up to 30,000 km (18,000 miles) after the display returns to 0 (zero).

3. If no further action is made, the display returns to the previous mode and the new interval is set.

If the interval distance is set to 0, the display will skip the maintenance information when the ignition switch is placed in the ON position.

WARNING/INDICATOR LIGHTS AND AUDIBLE REMINDERS

ABS	Anti-lock Braking System (ABS) warning light		Low fuel warning light		High beam indicator light
			Low tire pressure warning light	SERVICE ENGINE SOON	Malfunction Indicator Light (MIL)
BRAKE	Brake warning light		Low washer fluid warning light*	O/D OFF	Overdrive off indicator light*
		P SHIFT	P position selecting warning light*		Security indicator light
	Charge warning light		Seat belt warning light		Slip indicator light
	Door open warning light		Supplemental air bag warning light		Small light indicator light
PS	Electric power steering warning light	PASS AIR BAG OFF	Front passenger air bag status light		Turn signal/hazard indicator lights
	Engine oil pressure warning light	CRUISE	Cruise indicator light*	VDC OFF	Vehicle Dynamic Control (VDC) off indicator light
KEY	Intelligent Key system warning light*		Engine start operation indicator light*	*: if so equipped	

CHECKING BULBS

With all doors closed, apply the parking brake and place the ignition switch in the ON position without starting the engine. The following lights will come on:

, BRAKE or , , SERVICE ENGINE SOON, , PS

The following lights come on briefly and then go off (if so equipped):

, ABS or , , VDC OFF, , KEY, O/D OFF, P SHIFT, PASS AIR BAG OFF

If any light does not come on, it may indicate a burned-out bulb or an open circuit in the electrical system. Have the system checked by a NISSAN dealer.

WARNING LIGHTS

ABS or Anti-lock Braking System (ABS) warning light

When the ignition switch is in the ON position, the Anti-lock Braking System (ABS) warning light illuminates and then turns off. This indicates

the ABS is operational.

If the ABS warning light illuminates while the engine is running, or while driving, it may indicate the ABS is not functioning properly. Have the system checked by a NISSAN dealer.

If an ABS malfunction occurs, the anti-lock function is turned off. The brake system then operates normally, but without anti-lock assistance. (See “BRAKE SYSTEM” in the “5. Starting and driving” section.)

BRAKE or Brake warning light

This light functions for both the parking brake and the foot brake systems.

Parking brake indicator:

When the ignition switch is in the ON position, the light illuminates when the parking brake is applied.

Low brake fluid warning light:

When the ignition switch is in the ON position, the light warns of a low brake fluid level. If the light illuminates while the engine is running with the parking brake not applied, stop the vehicle and perform the following:

1. Check the brake fluid level. Add brake fluid as necessary. (See “BRAKE AND CLUTCH FLUID” in the “8. Maintenance and do-it-yourself” section.)
2. If the brake fluid level is correct, have the warning system checked by a NISSAN dealer.

Anti-lock Braking System (ABS) warning indicator:

When the parking brake is released and the brake fluid level is sufficient, if both the brake warning light and the Anti-lock Braking System (ABS) warning light illuminate, it may indicate the ABS is not functioning properly. Have the brake system checked, and if necessary repaired, by a NISSAN dealer promptly. (See “Anti-lock Braking System (ABS) warning light” earlier in this section.)

WARNING

- **Your brake system may not be working properly if the warning light is on. Driving could be dangerous. If you judge it to be safe, drive carefully to the nearest service station for repairs. Otherwise, have your vehicle towed because driving it could be dangerous.**
- **Pressing the brake pedal with the engine stopped and/or low brake fluid level may increase your stopping distance and braking will require greater pedal effort as well as pedal travel.**
- **If the brake fluid level is below the minimum or MIN mark on the brake fluid reservoir, do not drive until the brake system has been checked at a NISSAN dealer.**

Charge warning light

If the light illuminates while the engine is running, it may indicate the charging system is not functioning properly. Turn the engine off and check the alternator belt. If the belt is loose, broken, missing or if the light remains on, see a NISSAN dealer immediately.

CAUTION

Do not continue driving if the alternator belt is loose, broken or missing.

Door open warning light

This light illuminates when any of the doors and/or back door are not closed securely while the ignition switch is in the ON position.

PS Electric power steering warning light

When the ignition switch is in the ON position, the electric power steering warning light illuminates. After starting the engine, the electric power steering warning light turns off. This indicates the electric power steering system is operational.

If the electric power steering warning light illuminates while the engine is running, it may indicate the electric power steering system is not functioning properly and may need servicing. Have the electric power steering system checked by a NISSAN dealer.

When the electric power steering warning light illuminates with the engine running, the power assist to the steering will cease operation but you will still have control of the vehicle. At this time, greater steering efforts are required to operate the steering wheel, especially in sharp turns and at low speeds.

See “ELECTRIC POWER STEERING SYSTEM” in the “5. Starting and driving” section.

Engine oil pressure warning light

This light warns of low engine oil pressure. If the light flickers or illuminates during normal driving, pull off the road in a safe area, stop the engine **immediately** and call a NISSAN dealer or other authorized repair shop.

The engine oil pressure warning light is not designed to indicate a low oil level. Use the dipstick to check the oil level. (See “ENGINE OIL” in the “8. Maintenance and do-it-yourself” section.)

CAUTION

Running the engine with the engine oil pressure warning light on could cause serious damage to the engine almost immediately. Such damage is not covered by warranty. Turn off the engine as soon as it is safe to do so.

KEY Intelligent Key system warning light (if so equipped)

After the ignition switch is placed in the ON position, this light comes on for about 2 seconds and then turns off.

This light illuminates or blinks as follows:

- The light blinks in yellow when the door is closed with the Intelligent Key left outside the vehicle and the ignition switch in the ACC or ON position. Make sure that the Intelligent Key is inside the vehicle.
- The light blinks in green when the Intelligent Key battery is running out of power. Replace the battery with a new one. (See “KEY BATTERY REPLACEMENT” in the “8. Maintenance and do-it-yourself” section.)
- The light illuminates in yellow when it warns of a malfunction with the electrical steering lock system or the Intelligent Key system.

If the warning light illuminates in yellow while the engine is stopped, it may be impossible to free the steering lock or to start the engine. If the light comes on while the engine is running, you can drive the vehicle. However in these cases, contact a NISSAN dealer for repair as soon as possible.

Low fuel warning light

This light illuminates when the fuel in the tank is getting low. Refuel as soon as it is convenient, preferably before the fuel gauge reaches the 0 (empty) position.

There will be a small reserve of fuel remaining in the tank when the fuel gauge reaches the 0 position.

Low tire pressure warning light

Your vehicle is equipped with a Tire Pressure Monitoring System (TPMS) that monitors the tire pressure of all tires except the spare.

The low tire pressure warning light warns of low tire pressure or indicates that the TPMS is not functioning properly.

After the ignition switch is placed in the ON position, this light illuminates for about 1 second and turns off.

Low tire pressure warning:

If the vehicle is being driven with low tire pressure, the warning light will illuminate.

When the low tire pressure warning light illuminates, you should stop and adjust the tire pressure to the recommended COLD tire pressure shown on the Tire and Loading Information label. The low tire pressure warning light does not automatically turn off when the tire pressure is adjusted. After the tire is inflated to the recommended pressure, the vehicle must be driven at speeds above 16 MPH (25 km/h) to activate the TPMS and turn off the low tire pressure warning light. Use a tire pressure gauge to check the tire pressure.

For additional information, see "TIRE PRESSURE MONITORING SYSTEM (TPMS)" in the "5. Starting and driving" section and "TIRE PRESSURE MONITORING SYSTEM (TPMS)" in the "6. In case of emergency" section.

TPMS malfunction:

If the TPMS is not functioning properly, the low tire pressure warning light will flash for approximately 1 minute when the ignition switch is placed in the ON position. The light will remain on after 1 minute. Have the system checked by a NISSAN dealer.

For additional information, see "TIRE PRESSURE MONITORING SYSTEM (TPMS)" in the "5. Starting and driving" section.

WARNING

- **If the light does not illuminate with the ignition switch placed in the ON position, have the vehicle checked by a NISSAN dealer as soon as possible.**
- **If the light illuminates while driving, avoid sudden steering maneuvers or abrupt braking, reduce vehicle speed, pull off the road to a safe location and stop the vehicle as soon as possible. Driving with under-inflated tires may permanently damage the tires and increase the likelihood of tire failure. Serious vehicle damage could occur and may lead to an accident and could result in serious personal injury. Check the tire pressure for all four tires. Adjust the tire pressure to the recommended COLD tire pressure shown on the Tire and Loading Information label to turn the low tire pressure warning light OFF. If the light still illuminates while driving after adjusting the tire pressure, a tire may be flat. If you have a flat tire, replace it with a spare tire as soon as possible.**
- **When a spare tire is mounted or a wheel is replaced, the TPMS will not function and the low tire pressure warning light will flash for approximately 1 minute. The light will remain on after 1 minute. Contact your NISSAN dealer as soon as possible for tire replacement and/or system resetting.**
- **Replacing tires with those not originally specified by NISSAN could affect the proper operation of the TPMS.**

CAUTION

- **The TPMS is not a substitute for the regular tire pressure check. Be sure to check the tire pressure regularly.**
- **If the vehicle is being driven at speeds of less than 16 MPH (25 km/h), the TPMS may not operate correctly.**
- **Be sure to install the specified size of tires to the four wheels correctly.**

Low washer fluid warning light (Canada only)

This light illuminates when the washer fluid is at a low level. Add washer fluid as necessary. (See "WINDOW WASHER FLUID" in the "8. Maintenance and do-it-yourself" section.)

P position selecting warning light (if so equipped)

The warning light blinks in red when the ignition switch is pushed to stop the engine with the selector lever in any position except the P (Park) position.

If this warning appears, move the selector lever to the P (Park) position or push the ignition switch to the ON position.

An inside warning chime will also sound.

See "INTELLIGENT KEY SYSTEM" in the "3. Pre-driving checks and adjustments" section.

Seat belt warning light

The light and chime remind you to fasten seat belts. The light illuminates whenever the ignition switch is placed in the ON position, and will remain illuminated until the driver's seat belt is fastened. At the same time, the chime will sound for about 6 seconds unless the driver's seat belt is securely fastened.

The seat belt warning light for the front passenger will illuminate if the seat belt is not fastened when the front passenger's seat is occupied. For 5 seconds after the ignition switch is in the ON position, the system does not activate the warning light for the front passenger.

See "SEAT BELTS" in the "1. Safety — Seats, seat belts and supplemental restraint system" section for precautions on seat belt usage.

Supplemental air bag warning light

After turning the ignition switch to the ON position, the supplemental air bag warning light will illuminate. The supplemental air bag warning light will turn off after about 7 seconds if the supplemental front air bag and supplemental side air bag, curtain side-impact air bag systems and/or pretensioner seat belt are operational.

If any of the following conditions occur, the front air bag, side air bag, curtain air bag and pretensioner systems need servicing and your vehicle must be taken to your nearest NISSAN dealer.

- The supplemental air bag warning light remains on after approximately 7 seconds.
- The supplemental air bag warning light flashes intermittently.
- The supplemental air bag warning light does not illuminate at all.

Unless checked and repaired, the Supplemental Restraint Systems and/or the pretensioners may not function properly.

For additional information, see "SUPPLEMENTAL RESTRAINT SYSTEM" in the "1. Safety — Seats, seat belts and supplemental restraint system" section.

WARNING

If the supplemental air bag warning light is on, it could mean that the front air bag, side air bag, curtain air bag and/or pretensioner systems will not operate in an accident. To help avoid injury to yourself or others, have your vehicle checked by a NISSAN dealer as soon as possible.

INDICATOR LIGHTS

CRUISE Cruise indicator light (if so equipped)

Cruise main switch indicator:

This light illuminates when the cruise control main switch is pushed. The light turns off when the main switch is pushed again. When the cruise indicator light illuminates, the cruise control system is operational.

Cruise malfunction:

If the cruise indicator light blinks while the engine is running, it may indicate the cruise control system is not functioning properly. Have the system checked by a NISSAN dealer.

See “CRUISE CONTROL” in the “5. Starting and driving” section.

PASS AIR BAG OFF Front passenger air bag status light

The front passenger air bag status light (located on the center of the instrument panel) will be lit and the passenger front air bag will be OFF depending on how the front passenger seat is being used.

For front passenger air bag status light operation, see “NISSAN ADVANCED AIR BAG SYSTEM (front seats)” in the “1. Safety — Seats, seat belts and supplemental restraint system” section of this manual.

Engine start operation indicator light (if so equipped)

This light appears when the selector lever is in the P (Park) position. This light means that the engine will start by pushing the ignition switch with the brake pedal depressed. You can start the engine directly in any position.

High beam indicator light

This light illuminates when the headlight high beam is on and goes out when the low beam is selected.

SERVICE ENGINE SOON Malfunction Indicator Light (MIL)

If the malfunction indicator light illuminates steady or blinks while the engine is running, it may indicate a potential emission control and/or Continuously Variable Transmission (CVT) malfunction.

The malfunction indicator light may also illuminate steady if the fuel-filler cap is loose or missing, or if the vehicle runs out of fuel. Check to make sure the fuel-filler cap is installed and closed tightly, and that the vehicle has at least 3 US gallons (11.4 liters) of fuel in the fuel tank.

After a few driving trips, the SERVICE ENGINE SOON light should turn off if no other potential emission control system malfunction exists.

If this indicator light remains on for 20 seconds and then blinks for 10 seconds when the engine is not running, it indicates that the vehicle is not ready for an emission control system inspection/maintenance test. (See “READINESS FOR INSPECTION/MAINTENANCE (I/M) TEST” in the “9. Technical and consumer information” section.)

Operation:

The malfunction indicator light will illuminate in one of two ways:

- Malfunction indicator light illuminated steady

— An emission control system and/or CVT malfunction has been detected. Check the fuel-filler cap. If the fuel-filler cap is loose or missing, tighten or install the cap and continue to drive the vehicle. The SERVICE ENGINE SOON light should turn off after a few driving trips. If the SERVICE ENGINE SOON light does not turn off after a few driving trips, have the vehicle inspected by a NISSAN dealer. You do not need to have your vehicle towed to the dealer.

- Malfunction indicator light blinking — An engine misfire has been detected which may damage the emission control system.

  To reduce or avoid emission control system damage:

  a) Do not drive at speeds above 45 MPH (72 km/h).

  b) Avoid hard acceleration or deceleration.

  c) Avoid steep uphill grades.

  d) If possible, reduce the amount of cargo being hauled or towed.

  The malfunction indicator light may stop blinking and remain illuminated.

  Have the vehicle inspected by a NISSAN dealer. You do not need to have your vehicle towed to the dealer.

CAUTION

Continued vehicle operation without having the emission control system and/or CVT system checked and repaired as necessary could lead to poor driveability, reduced fuel economy, and possible damage to the emission control system.

O/D OFF Overdrive off indicator light (if so equipped)

The overdrive off indicator light illuminates when the overdrive off mode is selected.

For additional information, see ""CONTINUOUSLY VARIABLE TRANSMISSION (CVT)" in the "5. Starting and driving" section of this manual.

Security indicator light

The light blinks when the ignition switch is in the ACC, OFF or LOCK position. This function indicates the security system equipped on the vehicle is operational.

If the security system is malfunctioning, this light will remain on while the ignition switch is in the ON position. For additional information, see "SECURITY SYSTEMS" later in this section.

Slip indicator light

The light will blink when the Vehicle Dynamic Control (VDC) system is operating, thus alerting the driver to the fact that the road surface is slippery and the vehicle is nearing its traction limits.

Small light indicator light

The light illuminates when the headlight switch is turned to the position.

Turn signal/hazard indicator lights

The light flashes when the turn signal switch lever or hazard switch is turned on.

VDC OFF Vehicle Dynamic Control (VDC) off indicator light

The light illuminates when the Vehicle Dynamic Control (VDC) off switch is pushed to OFF. This indicates that the VDC system is not operating. When the VDC off indicator light and slip indicator light illuminate with the VDC system turned on, this light alerts the driver to the fact that the VDC system's fail-safe mode is operating, for example the VDC system may not be

functioning properly. Have the system checked by a NISSAN dealer. If a malfunction occurs in the system, the VDC system function will be canceled but the vehicle is still driveable. For additional information, see “VEHICLE DYNAMIC CONTROL (VDC) SYSTEM” in the “5. Starting and driving” section of this manual.

AUDIBLE REMINDERS

Key reminder chime

Models with Intelligent Key system:

A chime will sound if the driver side door is opened while the ignition switch is pushed to the ACC position.

Make sure the ignition switch is pushed to the OFF position, and take the Intelligent Key with you when leaving the vehicle.

Models without Intelligent Key system:

The key reminder chime sounds if the driver’s side door is opened while the key is left in the ignition switch and the ignition switch is in the ACC, OFF or LOCK position. Remove the key and take it with you when leaving the vehicle.

Light reminder chime

The light reminder chime will sound when the driver side door is opened with the light switch in the ≡DC≡ or position, and the ignition switch is in the ACC, OFF or LOCK position. Turn the light switch off when you leave the vehicle.

Brake pad wear warning

The disc brake pads have audible wear warnings. When a brake pad requires replacement, it will make a high pitched scraping sound when the vehicle is in motion. This scraping sound will first occur only when the brake pedal is depressed. After more wear of the brake pad, the sound will always be heard even if the brake pedal is not depressed. Have the brakes checked as soon as possible if the warning sound is heard.

Parking brake reminder chime

The parking brake reminder chime will sound if the vehicle is driven at more than 4 MPH (7 km/h) with the parking brake applied. Stop the vehicle and release the parking brake.

Seat belt warning chime

The seat belt warning chime will sound for about 6 seconds unless the driver’s seat belt is securely fastened.

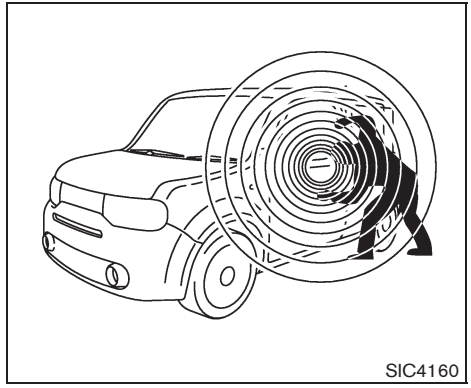
SIC4160

Your vehicle has two types of security systems, as follows:

- Vehicle security system
- NISSAN Vehicle Immobilizer System

The security condition will be shown by the security indicator light.

VEHICLE SECURITY SYSTEM

The vehicle security system provides visual and audio alarm signals if someone opens the doors, or back door when the system is armed. It is not, however, a motion detection type system that activates when a vehicle is moved or when a vibration occurs.

The system helps deter vehicle theft but cannot prevent it, nor can it prevent the theft of interior or exterior vehicle components in all situations. Always secure your vehicle even if parking for a brief period. Never leave your keys in the vehicle, and always lock it when unattended. Be aware of your surroundings, and park in secure, well-lit areas whenever possible.

Many devices offering additional protection, such as component locks, identification markers, and tracking systems, are available at auto supply stores and specialty shops. Your NISSAN dealer may also offer such equipment. Check with your insurance company to see if you may be eligible for discounts for various theft protection features.

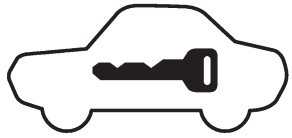

SIC2045

How to arm the vehicle security system

1. Close all windows.

   The system can be armed even if the windows are open.

2. Models with Intelligent Key system:

   Place the ignition switch in the OFF position and remove the Intelligent Key from the vehicle.

   Models without Intelligent Key system:

   Place the ignition switch in the LOCK position and remove the key.

3. Close all doors. Lock all doors. The doors can be locked with:

   - the LOCK button on the keyfob or Intelligent Key (if so equipped)
   - any request switch (Intelligent Key equipped model)
   - the power door lock switch
   - the key — master or mechanical (Intelligent Key equipped model)

4. Confirm that the security indicator light illuminates. The security indicator light stays on for about 30 seconds. The vehicle security system is now pre-armed. After about 30 seconds the vehicle security system automatically shifts into the armed phase. The security light begins to flash once every approximately 3 seconds. If, during this 30-second pre-arm time period, the door is unlocked, or the ignition switch is placed in the ACC or ON position, the system will not arm.

Even when the driver and/or passengers are in the vehicle, the system will activate with all doors locked with the ignition switch in the LOCK position. When turning the ignition switch to the ACC or ON position, the system will be released.

Vehicle security system activation

The vehicle security system will give the following alarm:

- The headlights blink and the horn sounds intermittently.
- The alarm automatically turns off after approximately 50 seconds. However, the alarm reactivates if the vehicle is tampered with again.

The alarm is activated by:

- Unlocking the door without using the keyfob, the Intelligent Key (if so equipped) the request switch (if so equipped) or the key. (Even if the door is opened by releasing the door inside lock knob, the alarm will activate.)

How to stop an activated alarm

The alarm will stop by unlocking a door by pushing the UNLOCK button on the keyfob or Intelligent Key, pushing the request switch or using the key. The alarm will not stop if the ignition switch is placed in the ACC or ON position.

If the system does not operate as described above, have it checked by a NISSAN dealer.

NISSAN VEHICLE IMMOBILIZER SYSTEM

The NISSAN Vehicle Immobilizer System will not allow the engine to start without the use of the registered key.

If the engine fails to start using the registered key, it may be due to interference caused by another registered key, an automated toll road device or automated payment device on the key ring. Restart the engine using the following procedures:

1. Leave the ignition switch in the ON position for approximately 5 seconds.
2. Place the ignition switch in the OFF or LOCK position and wait approximately 10 seconds.
3. Repeat step 1 and 2 again.
4. Restart the engine while holding the device (which may have caused the interference) separate from the registered key.

   If this procedure allows the engine to start, NISSAN recommends placing the registered key on a separate key ring to avoid interference from other devices.

Statement related to section 15 of FCC rules for NISSAN Vehicle Immobilizer System (CONT ASSY-BCM. ANT ASSY-IMMOBILISER)

This device complies with part 15 of the FCC Rules and RSS-210 of Industry Canada. Operation is subject to the following two conditions;

(1) This device may not cause harmful interference, and (2) this device must accept any interference received, including interference that may cause undesired operation of the device.

CHANGES OR MODIFICATIONS NOT EXPRESSLY APPROVED BY THE PARTY RESPONSIBLE FOR COMPLIANCE COULD VOID THE USER'S AUTHORITY TO OPERATE THE EQUIPMENT.

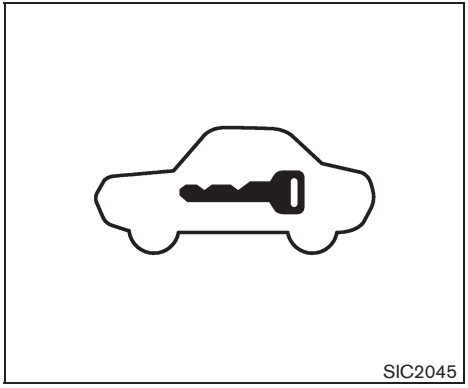

Security indicator light

The security indicator light is located on the meter panel. It indicates the status of the NISSAN Vehicle Immobilizer System.

The light blinks after the ignition switch was in the LOCK position. This function indicates the security systems equipped on the vehicle are operational.

If the NISSAN Vehicle Immobilizer System is malfunctioning, this light will remain on while the ignition switch is in the ON position.

If the light still remains on and/or the engine will not start, see a NISSAN dealer for NISSAN Vehicle Immobilizer System service as soon as possible. Please bring all registered keys that you have when visiting a NISSAN dealer for service.

WINDSHIELD WIPER AND WASHER SWITCH

WARNING

In freezing temperatures the washer solution may freeze on the windshield and obscure your vision which may lead to an accident. Warm windshield with the defroster before you wash the windshield.

CAUTION

- **Do not operate the washer continuously for more than 30 seconds.**
- **Do not operate the washer if the reservoir tank is empty.**
- **Do not fill the window washer reservoir tank with washer fluid concentrates at full strength. Some methyl alcohol based washer fluid concentrates may permanently stain the grille if spilled while filling the window washer reservoir tank.**
- **Pre-mix washer fluid concentrates with water to the manufacturer's recommended levels before pouring the fluid into the window washer reservoir tank. Do not use the window washer reservoir tank to**

mix the washer fluid concentrate and water.

If the windshield wiper operation is interrupted by snow or ice, the wiper may stop moving to protect its motor. If this occurs, turn the wiper switch to the OFF position and remove the snow or ice that is on and around the wiper arms. In approximately 1 minute, turn the switch on again to operate the wiper.

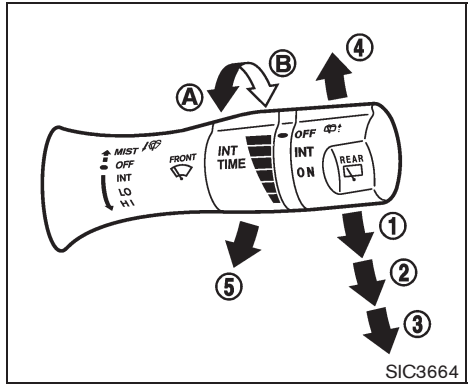

The windshield wiper and washer operates when the ignition switch is in the ON position.

Push the lever down to operate the wiper at the following speed:

1. Intermittent — intermittent operation can be adjusted by turning the knob toward Ⓐ (Slower) or Ⓑ (Faster).
2. Low — continuous low speed operation
3. High — continuous high speed operation

Push the lever up ④ to have one sweep operation of the wiper.

Pull the lever toward you ⑤ to operate the washer. Then the wiper will also operate several times.

REAR WINDOW WIPER AND WASHER SWITCH

WARNING

In freezing temperatures the washer solution may freeze on the rear window glass and obscure your vision. Warm the rear window with the defroster before you wash the rear window.

CAUTION

- **Do not operate the washer continuously for more than 30 seconds.**
- **Do not operate the washer if the reservoir tank is empty.**
- **Do not fill the window washer reservoir tank with washer fluid concentrates at full strength. Some methyl alcohol based washer fluid concentrates may permanently stain the grille if spilled while filling the window washer reservoir tank.**
- **Pre-mix washer fluid concentrates with water to the manufacturer's recommended levels before pouring the fluid into the window washer reservoir tank. Do not use the window washer reservoir tank to mix the washer fluid concentrate and water.**

If the rear window wiper operation is interrupted by snow or ice, the wiper may stop moving to protect its motor. If this occurs, turn the wiper switch to the OFF position and remove the snow or ice that is on and around the wiper arms. In approximately 1 minute, turn the switch on again to operate the wiper.

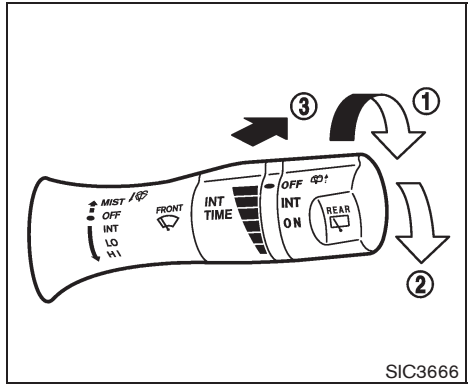

SIC3666

The rear window wiper and washer operate when the ignition switch is in the ON position.

Turn the switch clockwise from the OFF position to operate the wiper.

1. Intermittent (INT) — intermittent operation (not adjustable)
2. Low (ON) — continuous low speed operation

Push the switch forward 3 to operate the washer. Then the wiper will also operate several times.

REAR WINDOW AND OUTSIDE MIRROR DEFROSTER SWITCH

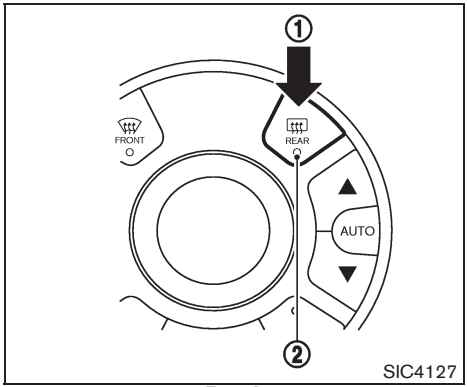

Type A

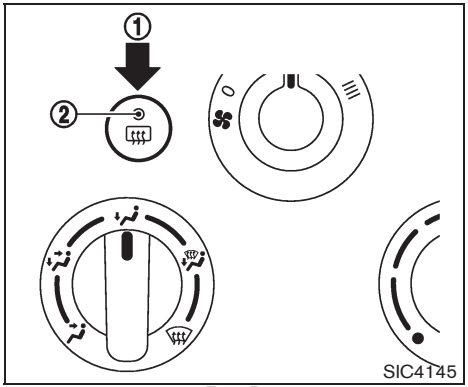

Type B

To defog/defrost the rear window glass and outside mirrors (if so equipped), start the engine and push the switch ① on. The indicator light ② will illuminate. Push the switch again to turn the defroster off.

It will automatically turn off in approximately 15 minutes.

CAUTION

When cleaning the inner side of the rear window, be careful not to scratch or damage the rear window defroster.

HEADLIGHT AND TURN SIGNAL SWITCH

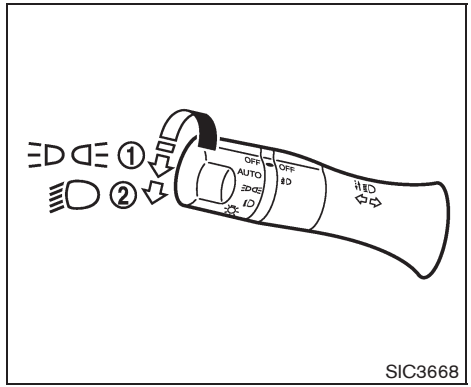

HEADLIGHT SWITCH

Lighting

① Turn the switch to the position:

The front park, side marker, tail, license plate and instrument lights will come on.

② Turn the switch to the position:

Headlights will come on and all the other lights remain on.

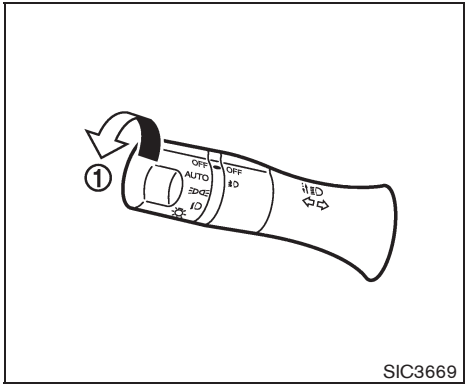

SIC3669

Autolight system (if so equipped)

The autolight system allows the headlights to be set so they turn on and off automatically.

To set the autolight system:

1. Make sure the headlight switch is in the AUTO position (1).
2. Place the ignition switch in the ON position.
3. The autolight system automatically turns the headlights on and off.

To turn the autolight system off, turn the switch to the OFF, or position.

The autolight system can turn on the headlights automatically when it is dark and turn off the headlights when it is light.

For US models: The headlights will also be turned on automatically at twilight or in rainy weather (when the windshield wiper is operated continuously).

If the ignition switch is placed in the OFF position and one of the doors is opened and this condition is continued, the headlights remain on for 5 minutes.

Automatic headlights off delay:

You can keep the headlights on for up to 45 seconds after you place the ignition switch in OFF and open any door then close all the doors.

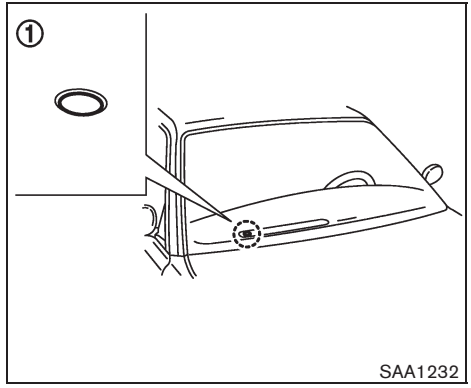

SAA1232

Be sure not to put anything on top of the photo sensor (1) located on the top of the instrument panel. The photo sensor controls the autolight; if it is covered, the photo sensor reacts as if it is dark and the headlights will illuminate.

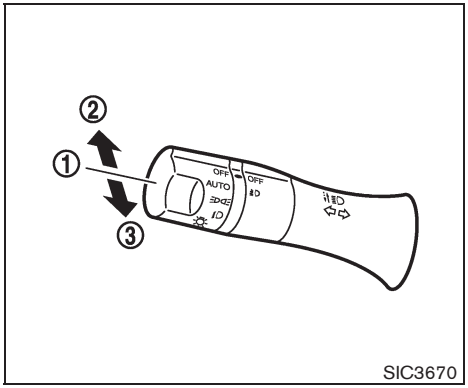

Headlight beam select

① To select the low beam, put the lever in the neutral position as shown.

② To select the high beam, push the lever forward while the switch is in the position. Pull it back to select the low beam.

③ Pulling the lever toward you will flash the headlight high beam even when the headlight switch is in the OFF position.

Battery saver system

- When the headlight switch is in the or position while the ignition switch is in the ON position, the lights will automatically turn off 5 minutes after the ignition switch has been placed in the OFF position.
- When the headlight switch remains in the or position after the lights automatically turn off, the lights will turn on when the ignition switch is placed in the ON position.

CAUTION

- **When you turn on the headlight switch again after the lights automatically turn off, the lights will not turn off automatically. Be sure to turn the light switch to the OFF position when you leave the vehicle for extended periods of time, otherwise the battery will be discharged.**
- **Never leave the light switch on when the engine is not running for extended periods of time even if the headlights turn off automatically.**

Daytime running light system (Canada only)

The daytime running lights automatically illuminate when the engine is started with the parking brake released. The daytime running lights operate with the headlight switch in the OFF position or in the position. Turn the headlight switch to the position for full illumination when driving at night.

If the parking brake is applied before the engine is started, the daytime running lights do not illuminate. The daytime running lights illuminate once the parking brake is released. The daytime running lights will remain on until the ignition switch is placed in the OFF position.

WARNING

When the daytime running light system is active, tail lights on your vehicle are not on. It is necessary at dusk to turn on your headlights. Failure to do so could cause an accident injuring yourself and others.

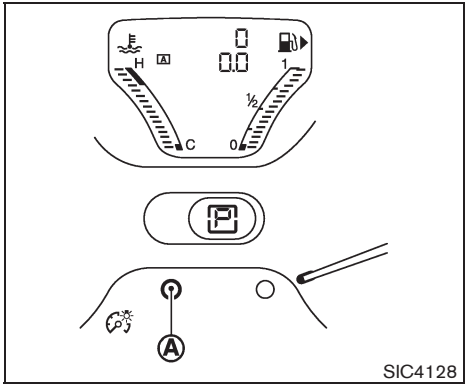

SIC4128

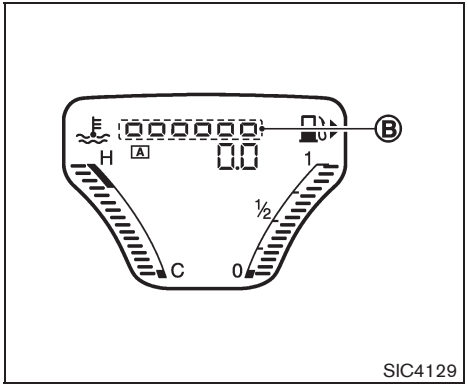

SIC4129

Instrument brightness control

The instrument brightness control operates when the ignition switch is in the ON position.

Push the control knob Ⓐ to adjust the brightness of the instrument panel lights. The brightness indicator Ⓑ will be shown briefly in the vehicle information display when the control is turned.

When the brightness level reaches the maximum or minimum, a beep will sound.

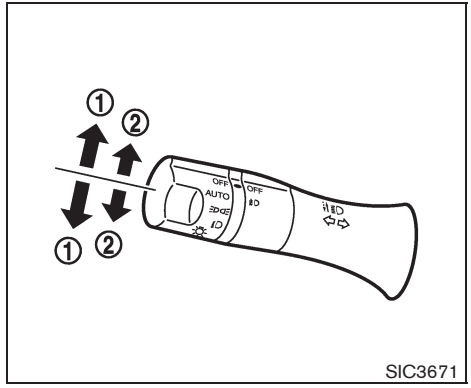

SIC3671

TURN SIGNAL SWITCH

① Turn signal

Move the lever up or down to signal the turning direction. When the turn is completed, the turn signals cancel automatically.

② Lane change signal

To indicate a lane change, move the lever up or down to the point where lights begin flashing.

HAZARD WARNING FLASHER SWITCH

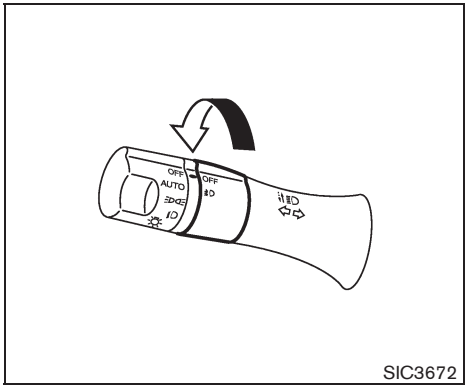

SIC3672

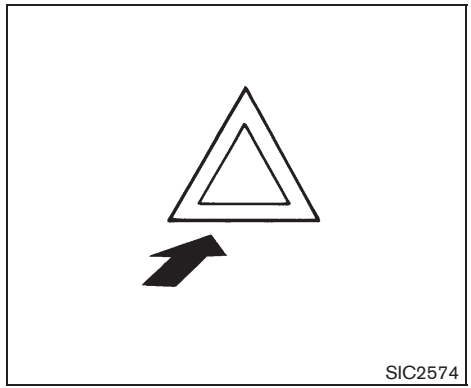
SIC2574

Push the switch on to warn other drivers when you must stop or park under emergency conditions. All turn signal lights will flash.

WARNING

- **If stopping for an emergency, be sure to move the vehicle well off the road.**
- **Do not use the hazard warning flashers while moving on the highway unless unusual circumstances force you to drive so slowly that your vehicle might become a hazard to other traffic.**
- **Turn signals do not work when the hazard warning flasher lights are on.**

The flasher can be actuated with the ignition switch in any position.

Some state laws may prohibit the use of the hazard warning flasher switch while driving.

FOG LIGHT SWITCH (if so equipped)

To turn the fog lights on, turn the headlight switch to the position, then turn the switch to the position. To turn them off, turn the switch to the OFF position.

The headlights must be on for the fog lights to operate.

HORN

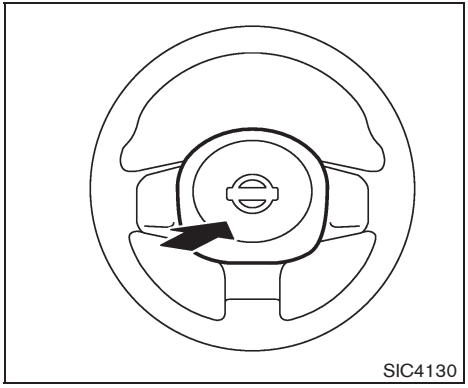

To sound the horn, push the center pad area of the steering wheel.

WARNING

Do not disassemble the horn. Doing so could affect proper operation of the supplemental front air bag system. Tampering with the supplemental front air bag system may result in serious personal injury.

VEHICLE DYNAMIC CONTROL (VDC) OFF SWITCH

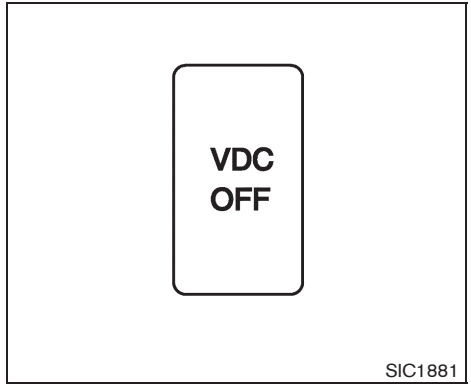

The vehicle should be driven with the Vehicle Dynamic Control (VDC) system on for most driving conditions.

If the vehicle is stuck in mud or snow, the VDC system reduces the engine output to reduce wheel spin. The engine speed will be reduced even if the accelerator is depressed to the floor. If maximum engine power is needed to free a stuck vehicle, turn the VDC system off.

To turn off the VDC system, push the VDC OFF switch. The VDC OFF indicator will illuminate.

Push the VDC OFF switch again or restart the engine to turn on the system. (See “VEHICLE DYNAMIC CONTROL (VDC) SYSTEM” in the “5. Starting and driving” section.)

CLOCK (if so equipped)

The digital clock (in the audio unit) displays time when the ignition switch is in the ACC or ON position.

The clock ON or OFF mode can be selected.

If the power supply is disconnected, the clock will not indicate the correct time. Readjust the time.

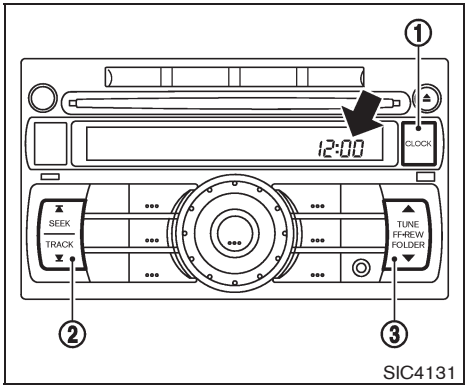

Type A

ADJUSTING THE TIME

Type A

Push the CLOCK button ① to turn the clock on or off.

1. Push and hold the CLOCK button ① until the clock display starts to flash.
2. Push the SEEK/TRACK button ② to adjust the hours.
3. Push the TUNE/FF·REW button ③ to adjust the minutes.
4. Push the CLOCK button ① again to exit the clock set mode.

The display will return to the regular clock display after 10 seconds.

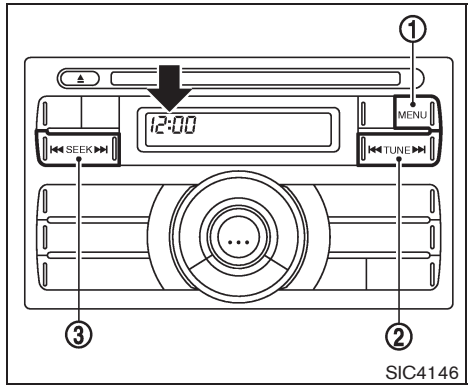

Type B

Type B

Push the MENU button ① until the CLOCK mode appears. Then push the TUNE ② or SEEK ③ button to select “CLK-ON” or “CLK-OFF” to turn the clock on or off.

“CLK-ON” needs to be selected before adjusting the clock display.

1. Push the MENU button ①.
2. Push the MENU button ① again. The clock display starts to flash.
3. Push the TUNE ② or SEEK ③ button to adjust the hours.
4. Push the MENU button ① again. The

display will switch to the minute adjustment mode.

5. Push the TUNE or SEEK button to adjust the minutes.
6. Push the MENU button again to exit the clock mode.

The display will return to the regular clock display after 10 seconds.

RESETTING THE TIME

By holding down the CLOCK (type A) or MENU (type B) button and then pushing the TUNE or SEEK button, the time will be reset as follows.

- In case the displayed minute is in the range of 00 - 29, the hour will stay the same and the minute will be reset to 00.
- In case the displayed minute is in the range of 30 - 59, the hour will be advanced by one hour and the minute will be reset to 00.

For example, if the CLOCK or MENU and TUNE buttons are pushed while the time is between “8:00” and “8:29”, the display will be reset to “8:00”. If pushed while the time is between “8:30” and “8:59”, the display will be reset to “9:00”. At the same time the display will return to the previous audio mode.

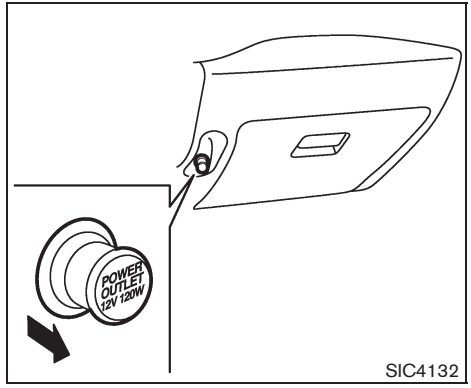

The power outlet is located in the instrument panel.

CAUTION

- **The outlet and plug may be hot during or immediately after use.**
- **Do not use with accessories that exceed a 12 volt, 120W (10A) power draw. Do not use double adapters or more than one electrical accessory.**
- **Use power outlet with the engine running to avoid discharging the vehicle battery.**
- **Avoid using power outlet when the air conditioner, headlights or rear window defroster is on.**
- **This power outlet is not designed for use with a cigarette lighter unit.**
- **Push the plug in as far as it will go. If good contact is not made, the plug may overheat or the internal temperature fuse may open.**
- **Before inserting or disconnecting a plug, be sure the electrical accessory being used is turned OFF.**
- **When not in use, be sure to close the cap. Do not allow water to contact the outlet.**

CUP HOLDERS

CAUTION

- **Avoid abrupt starting and braking when the cup holder is being used to prevent spilling the drink. If the liquid is hot, it can scald you or your passenger.**
- **Use only soft cups in the cup holder. Hard objects can injure you in an accident.**

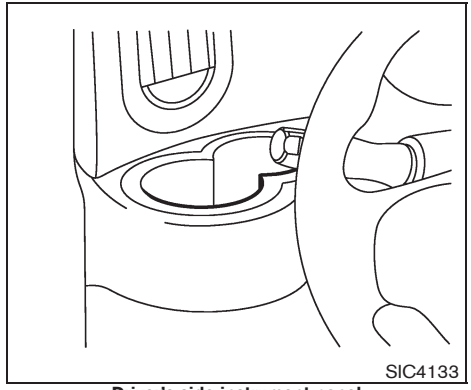

Driver's side instrument panel

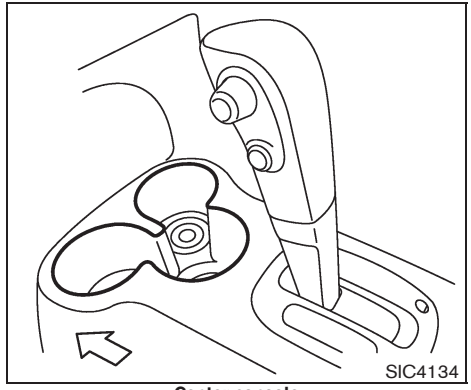

Center console

Front

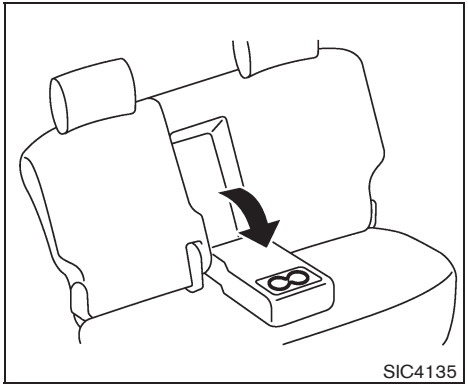

Rear (if so equipped)

Pull the armrest forward until it is horizontal.

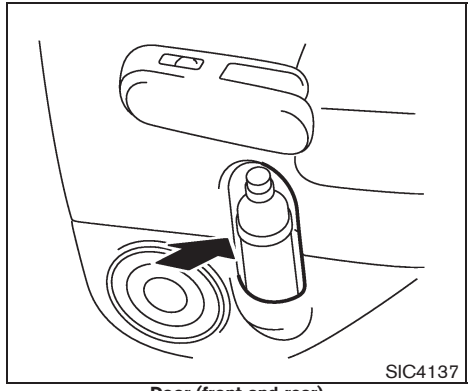

Door (front and rear)

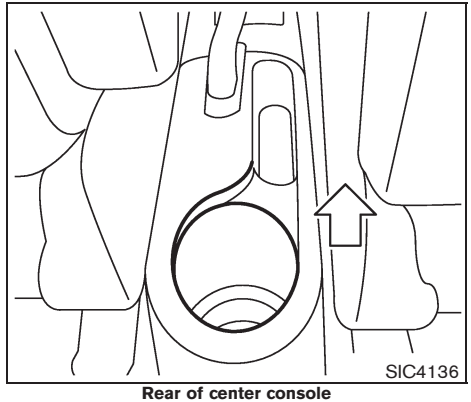

Rear of center console

Soft bottle holders

CAUTION

- **Do not use bottle holder for any other objects that could be thrown about in the vehicle and possibly injure people during sudden braking or an accident.**
- **Do not use bottle holder for open liquid containers.**

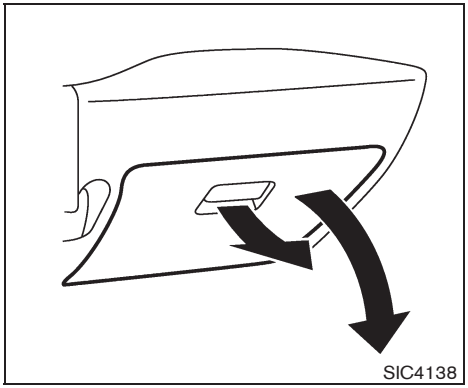

GLOVE BOX

WARNING

Keep glove box lid closed while driving to help prevent injury in an accident or a sudden stop.

To open the glove box, pull the handle.

To close, push the lid in until the lock latches.

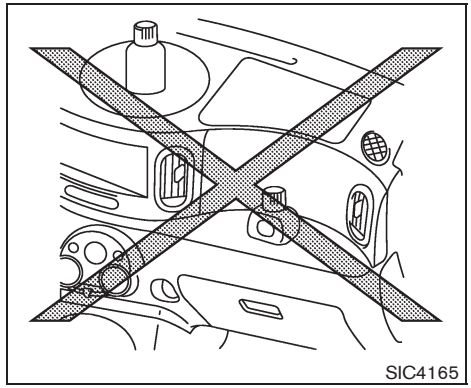

WARNING

Do not store objects on the horizontal surface just above the glove box or on top of the instrument panel. Objects can become projectiles and/or interfere with passenger air bag deployment causing serious personal injury.

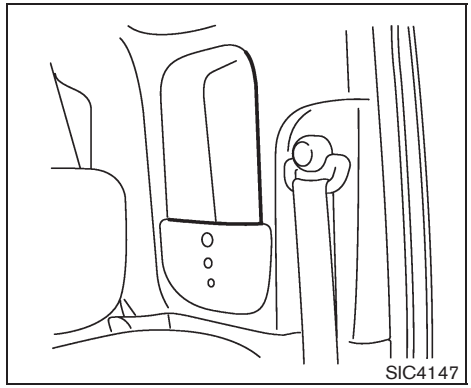

REAR PILLAR POCKET

CAUTION

Do not keep heavy or long objects in the pocket.

CARGO COVER (if so equipped)

The cargo cover keeps the contents in the cargo area hidden from the outside.

Only attach the hook and loop fastener on the cargo cover privacy cloth to the area on the rear seatback where it is supposed to be attached. Otherwise, the seat surface could be damaged.

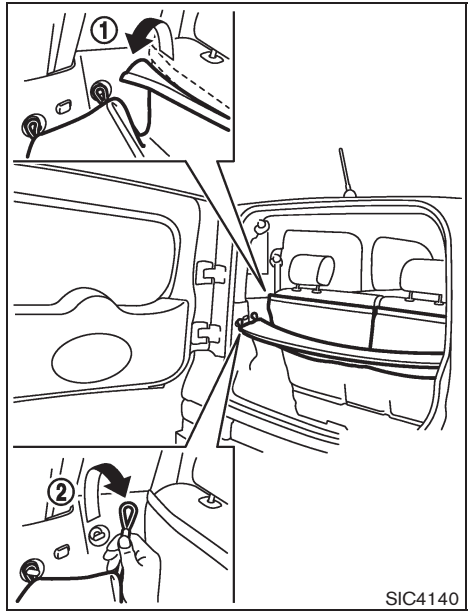

To remove the cargo cover:

1. Remove the edge of the cargo cover privacy cloth (1) from the rear seatback.
2. Remove the straps (2) from the luggage hooks.

WARNING

- **Never put anything on the cargo cover, no matter how small. Any object on it could cause an injury in an accident or sudden stop.**
- **Do not leave the cargo cover in the vehicle with it disengaged from the hooks.**
- **Properly secure all cargo with ropes or straps to help prevent it from sliding or shifting. Do not place cargo higher than the seatbacks. In a sudden stop or collision, unsecured cargo could cause personal injury.**
- **If the cargo cover contacts the top tether strap when it is attached to the top tether anchor, remove the cargo cover from the vehicle or secure it on the cargo floor below its attachment location. If the cargo cover is not removed, it may damage the top tether strap during a collision. Your child could be seriously injured or killed in a collision if the child restraint top tether strap is damaged.**

- **Do not allow cargo to contact the top tether strap when it is attached to the top tether anchor. Properly secure the cargo so it does not contact the top tether strap. Cargo that is not properly secured or that contacts the top tether strap may damage the top tether strap during a collision. Your child could be seriously injured or killed in a collision if the child restraint top tether strap is damaged.**

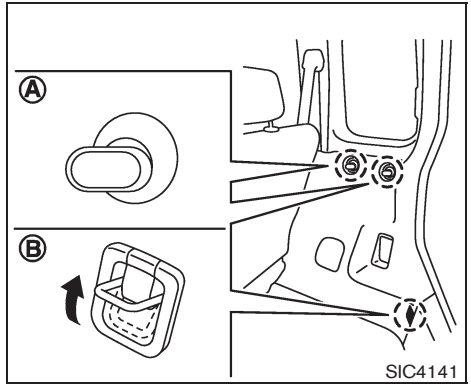

LUGGAGE HOOKS

WARNING

- **Do not attach upper tether anchors to the luggage hooks. The child restraint will not be properly installed. Your child could be injured or killed in a sudden stop or collision.**
- **Always make sure that the luggage is properly secured. Use the suitable ropes and hooks.**
- **Unsecured luggage can become dangerous in an accident or sudden stop.**

CAUTION

Do not apply a total load of more than 7 lb (3 kg) Ⓐ or 22 lb (10 kg) Ⓑ to a single hook.

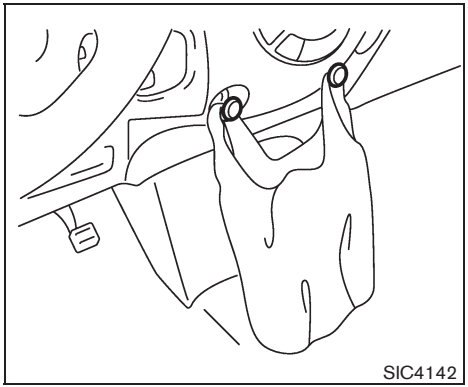

Instrument panel

UTILITY HOOKS (if so equipped)

Two removable utility hooks are supplied with your vehicle. The utility hooks can be attached to or removed from the holes on the instrument panel and the rear doors.

CAUTION

Do not apply a total load of more than 3 lb (1.5 kg) to a single hook.

To remove the hook from the hole, pull it straight up. **Do not twist or turn the hooks for installation or removal.**

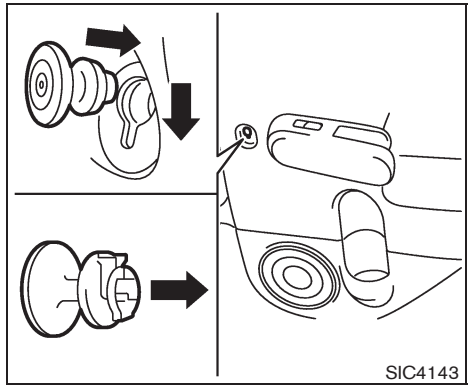

Rear door

The utility hooks can be attached to the holes as illustrated.

WINDOWS

POWER WINDOWS

WARNING

- **Make sure that all passengers have their hands, etc. inside the vehicle while it is in motion and before closing the windows. Use the window lock switch to prevent unexpected use of the power windows.**
- **Do not leave children unattended inside the vehicle. They could unknowingly activate switches or controls and become trapped in the window. Unattended children could become involved in serious accidents.**

The power windows operate when the ignition switch is in the ON position, or for about 45 seconds after the ignition switch is placed in the OFF position. If the driver's or front passenger's door is opened during this period of about 45 seconds, power to the windows is canceled.

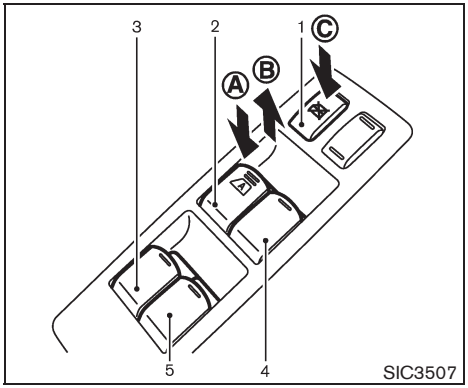

Main power window switch (driver's side)

1. Window lock button
2. Driver side window
3. Rear left passenger side window
4. Front passenger side window
5. Rear right passenger side window

To open or close the window, push down Ⓐ or pull up Ⓑ the switch and hold it. The main switch (driver side switches) will open or close all the windows.

Locking passengers' windows

When the lock button Ⓒ is pushed in, only the driver side window can be opened or closed. Push it in again to cancel.

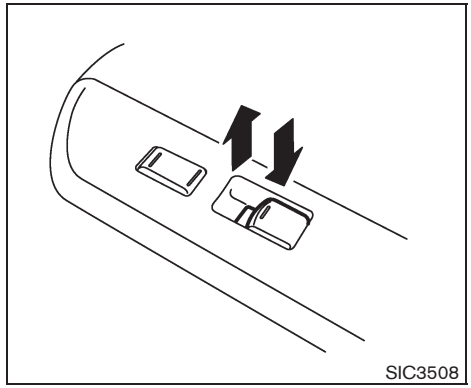

Passenger side power window switch

The passenger side switch will open or close only the corresponding window. To open or close the window, push down or pull up the switch and hold it.

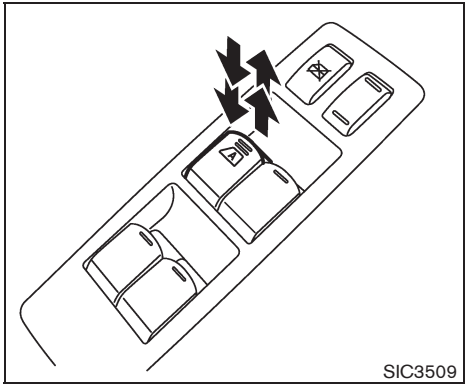

Automatic operation

The automatic operation is available for the switch that has an A mark on its surface.

To fully open or close the window, completely push down or pull up the switch and release it; the switch need not be held. The window will automatically open or close all the way. To stop the window, just push or lift the switch in the opposite direction.

A light push or pull on the switch will cause the window to open or close until the switch is released.

Auto-reverse function

WARNING

There are some small distances immediately before the closed position which cannot be detected. Make sure that all passengers have their hands, etc., inside the vehicle before closing the window.

If the control unit detects something caught in the window as it is closing, the window will be immediately lowered.

The auto reverse function can be activated when the window is closed by automatic operation when the ignition switch is in the ON position or for 45 seconds after the ignition switch is placed in the OFF position.

Depending on the environment or driving conditions, the auto reverse function may be activated if an impact or load similar to something being caught in the window occurs.

If the windows do not close automatically

If the power window automatic function (closing only) does not operate properly, perform the following procedure to initialize the power window system.

1. Place the ignition switch in the ON position.
2. Close the door.
3. Open the window completely by operating the power window switch.
4. Pull the power window switch and hold it to close the window, and then hold the switch more than 3 seconds after the window is closed completely.
5. Release the power window switch. Operate the window by the automatic function to confirm the initialization is complete.

If the power window automatic function does not operate properly after performing the procedure above, have your vehicle checked by a NISSAN dealer.

CAUTION

Do not use for extended periods of time with the engine stopped. This could result in a discharged battery.

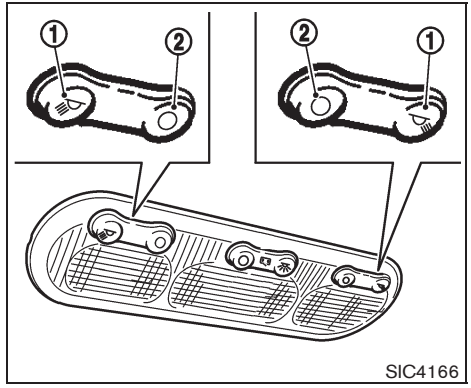

MAP LIGHTS (if so equipped)

Operate the map light switch to turn the map light on or off.

1 : ON position

2 : OFF position

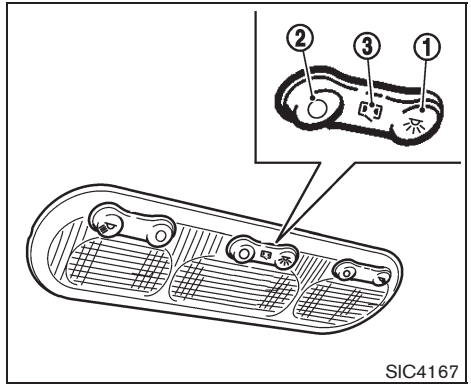

MAP LIGHT CONTROL SWITCH (if so equipped)

The map lights control switch has three positions: ON 1 , OFF 2 and center 3 .

ON position

When the switch is in the ON position 1 , the map lights will illuminate.

OFF position

When the switch is in the OFF position 2 , the map lights will not illuminate, regardless of the condition.

Center position

When the switch is in the center position 3 ,

the map lights will illuminate under the following conditions:

- ignition switch is placed in the OFF position (models with Intelligent Key system)

  — remain on for about 15 seconds.

- the key is removed from the ignition switch (models without Intelligent Key system)

  — remain on for about 15 seconds.

- doors are unlocked by pushing the UNLOCK button (on the keyfob or Intelligent Key) or the request switch (Intelligent Key system equipped model), with the ignition switch in the LOCK position

  — remain on for about 15 seconds.

- any door is opened and then closed with the ignition switch in the LOCK position

  — remain on for about 15 seconds.

- any door is opened with the ignition switch in the ACC or ON position

  — remain on while the door is opened. When the door is closed, the lights go off.

The lights will turn off after 30 minutes when the lights remain illuminated to prevent the battery from becoming discharged.

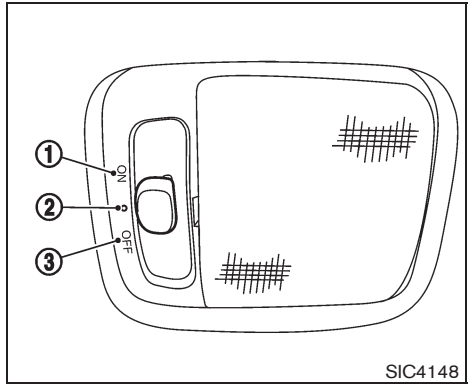

CEILING LIGHT

The ceiling light switch has three positions: ON (1), center (2) and OFF (3).

ON position

When the switch is in the ON position (1), the ceiling light will illuminate.

Center position

When the switch is in the center ● position (2), the ceiling light will illuminate under the following conditions:

- ignition switch is placed in the OFF position (models with Intelligent Key system)

  — remain on for about 15 seconds.

- the key is removed from the ignition switch (models without Intelligent Key system)

  — remain on for about 15 seconds.

- doors are unlocked by pushing the UNLOCK button (on the keyfob or Intelligent Key) or the request switch (Intelligent Key system equipped model), with the ignition switch in the LOCK position

  — remain on for about 15 seconds.

- any door is opened and then closed with the ignition switch in the LOCK position

  — remain on for about 15 seconds.

- any door is opened with the ignition switch in the ACC or ON position

  — remain on while the door is opened. When the door is closed, the lights go off.

The light will turn off after 30 minutes when the lights remain illuminated to prevent the battery from becoming discharged.

OFF position

When the switch is in the OFF position (3), the ceiling light will not illuminate, regardless of the condition.

CARGO LIGHT (if so equipped)

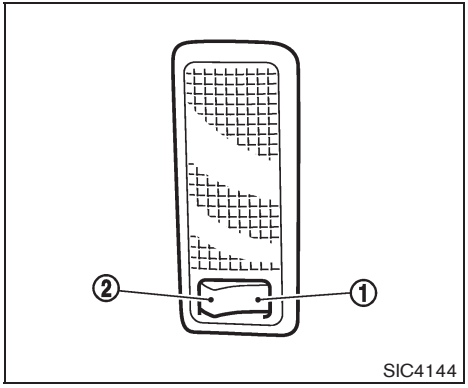

When the switch is in the ON position ①, the light illuminates while the back door is opened. When the back door is closed, the light will turn off.

When the switch is in the OFF position ②, the light will turn off.

MEMO

3 Pre-driving checks and adjustments

Keys 3-2
NISSAN Vehicle Immobilizer System keys 3-2
Intelligent Keys (if so equipped)..... 3-3
Doors..... 3-4
Locking with key 3-4
Locking with inside lock knob 3-5
Locking with power door lock switch 3-5
Automatic door locks 3-5
Child safety rear door lock 3-6
Remote keyless entry system (if so equipped)..... 3-7
How to use remote keyless entry system 3-8
Intelligent Key system (if so equipped) 3-10
Intelligent Key operating range 3-12
Door locks/unlocks precaution 3-12
Intelligent Key operation..... 3-13
Battery saver system..... 3-14
Warning lights and audible reminders 3-14
Troubleshooting guide 3-15
How to use remote keyless entry function 3-17
Hood 3-21
Back door 3-22
Bumpers and side sill extensions (Krōm models) 3-23
Fuel-filler door 3-24
Opening the fuel-filler door..... 3-24
Fuel-filler cap 3-24
Tilt steering column 3-25
Tilt operation..... 3-26
Sun visors 3-26
Mirrors..... 3-26
Inside mirror..... 3-26
Outside mirrors..... 3-27

A key number plate is supplied with your keys. Record the key number and keep it in a safe place (such as your wallet), not in the vehicle. If you lose your keys, see a NISSAN dealer for duplicates by using the key number. NISSAN does not record any key numbers so it is very important to keep track of your key number plate.

A key number is only necessary when you have lost all keys and do not have one to duplicate from. If you still have a key, this key can be duplicated by a NISSAN dealer.

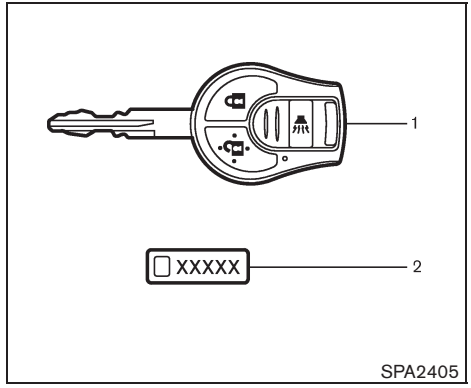

1. Master key (2 sets)
2. Key number plate

NISSAN VEHICLE IMMOBILIZER SYSTEM KEYS

Your vehicle can only be driven with the master keys which are registered to the NISSAN Vehicle Immobilizer System components in your vehicle. These keys have a transponder chip in the key head.

Never leave these keys in the vehicle.

Additional or replacement keys:

If you still have a key, the key number is not necessary when you need extra NISSAN Vehicle Immobilizer System keys. Your dealer can duplicate your existing key. As many as 5 keys can be used with one vehicle. You should bring all the registered keys that you have to a NISSAN dealer for registration. This is because the registration process will erase the memory of all key codes previously registered into the NISSAN Vehicle Immobilizer System. After the registration process, these components will only recognize keys coded into the NISSAN Vehicle Immobilizer System during registration. Any key that is not given to your dealer at the time of registration will no longer be able to start your vehicle.

CAUTION

Do not allow the NISSAN Vehicle Immobilizer System key, which contains an electrical transponder, to come in contact with salt water. This could cause the system to malfunction.

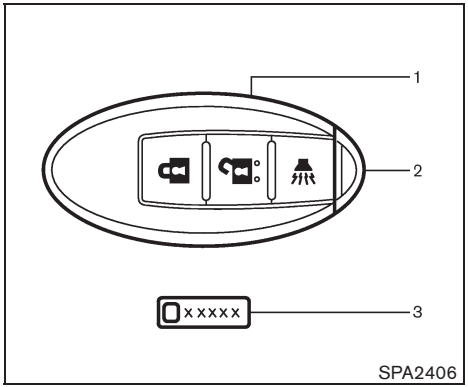

1. Intelligent Key (2 sets)
2. Mechanical key (inside Intelligent Key) (2 sets)
3. Key number plate

INTELLIGENT KEYS (if so equipped)

Your vehicle can only be driven with the Intelligent Keys which are registered to your vehicle's Intelligent Key system components and NISSAN Vehicle Immobilizer System components. As many as 4 Intelligent Keys can be registered and used with one vehicle. The new keys must be registered by a NISSAN dealer prior to use with the Intelligent Key system and NISSAN Vehicle Immobilizer System of your vehicle. Since the registration process requires erasing all memory in the Intelligent Key components when registering new keys, be sure to take all Intelligent Keys that you have to the NISSAN dealer.

⚠ CAUTION

- **Be sure to carry the Intelligent Key with you when driving. The Intelligent Key is a precision device with a built-in transmitter. To avoid damaging it, please note the following.**
  - **— The Intelligent Key is water resistant; however, wetting may damage the Intelligent Key. If the Intelligent Key gets wet, immediately wipe until it is completely dry.**
  - **— Do not bend, drop or strike it against another object.**
  - **— Do not place the Intelligent Key for an extended period in a place where temperatures exceed 140°F (60°C).**
  - **— Do not change or modify the Intelligent Key.**
  - **— Do not use a magnet key holder.**
  - **— Do not place the Intelligent Key near an electric appliance such as a television set, personal computer or cellular phone.**
  - **— Do not allow the Intelligent Key to come into contact with water or salt water, and do not wash it in a washing machine. This could affect the system function.**
- **If an Intelligent Key is lost or stolen, NISSAN recommends erasing the ID code of that Intelligent Key. This will prevent the Intelligent Key from unauthorized use to unlock the vehicle. For information regarding the erasing procedure, please contact a NISSAN dealer.**

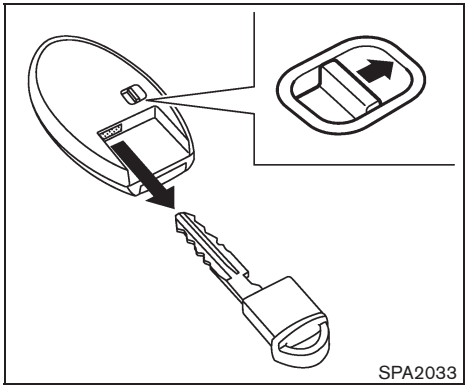

Mechanical key

To remove the mechanical key, release the lock knob at the back of the Intelligent Key.

To install the mechanical key, firmly insert it into the Intelligent Key until the lock knob returns to the lock position.

Use the mechanical key to lock or unlock the doors. (See “DOORS” later in this section.)

CAUTION

Always carry the mechanical key installed in the Intelligent Key.

WARNING

- **Always have the doors locked while driving. Along with the use of seat belts, this provides greater safety in the event of an accident by helping to prevent persons from being thrown from the vehicle. This also helps keep children and others from unintentionally opening the doors, and will help keep out intruders.**
- **Before opening any door, always look for and avoid oncoming traffic.**
- **Do not leave children unattended inside the vehicle. They could unknowingly activate switches or controls. Unattended children could become involved in serious accidents.**

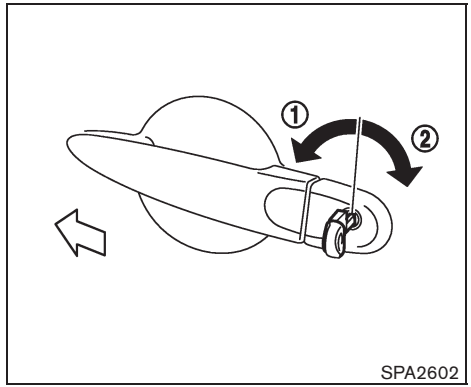

LOCKING WITH KEY

The power door lock system allows you to lock or unlock all doors simultaneously.

- Turning the driver’s door key cylinder to the front of the vehicle (1) will lock all doors and the back door.
- Turning the driver’s door key cylinder once to the rear of the vehicle (2) will unlock the driver’s door. After returning the key to the neutral position, turning it to the rear again within 5 seconds will unlock all doors and the back door.

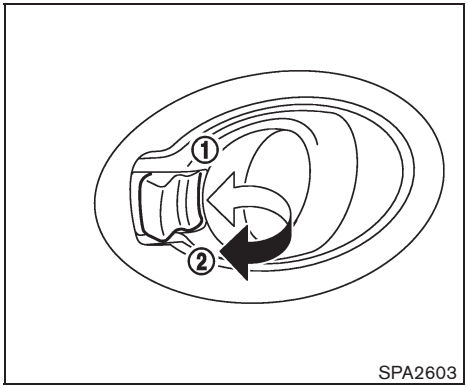

LOCKING WITH INSIDE LOCK KNOB

To lock the door without the key, move the inside lock knob to the lock position ① then close the door.

To unlock, move the inside lock knob to the unlock position ② .

When locking the door without a key, be sure not to leave the key inside the vehicle.

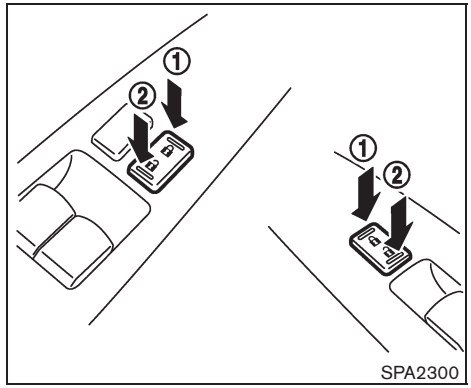

LOCKING WITH POWER DOOR LOCK SWITCH

Operating the power door lock switch will lock or unlock all the doors. The switches are located on the driver's and front passenger's door armrests.

To lock the doors, push the power door lock switch to the lock position ① with the driver's or front passenger's door open, then close the door.

When locking the door this way, be sure not to leave the key inside the vehicle.

To unlock the doors, push the power door lock switch to the unlock position ② .

Lockout protection

Lockout protection function helps to prevent the keys from being accidentally locked inside the vehicle.

For models with Intelligent Key system:

- When the power door lock switch (driver's or front passenger's) is moved to the lock position with the ignition switch placed in the ACC or ON position and any door open, all doors will lock and then unlock automatically.
- When the power door lock switch is moved to the lock position with the Intelligent Key left in the vehicle and any door open, all doors will unlock automatically and a chime will sound after the door is closed.

For models without Intelligent Key system:

When the power door lock switch is moved to the lock position with the key in the ignition switch and any door open, all doors will lock and then unlock automatically.

AUTOMATIC DOOR LOCKS

- All doors will be locked automatically when the vehicle speed reaches 15 MPH (24 km/h).
- All doors will be unlocked automatically when the ignition switch is placed in the

OFF position (models with Intelligent Key system).

- All doors will be unlocked automatically when the key is removed from the ignition switch (models without Intelligent Key system).

The automatic lock and unlock functions can be deactivated or activated independently of each other.

To deactivate or activate the automatic lock or unlock system, perform the following procedure.

1. Close all doors.
2. Place the ignition switch in the ON position.
3. Do one of the following within 20 seconds of performing step 2.
   - To change AUTO UNLOCK settings: push and hold the power door lock switch to the 🔓 position (UNLOCK) for more than 5 seconds.
   - To change AUTO LOCK settings: push and hold the power door lock switch to the 🔒 position (LOCK) for more than 5 seconds.
4. When activated, the hazard indicator will flash twice. When deactivated, the hazard indicator will flash once.
5. The ignition must be placed in the OFF and ON position again between each setting change.

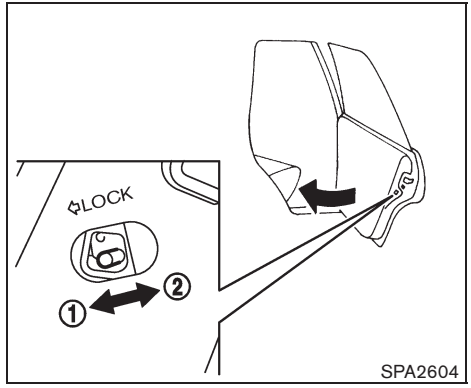

CHILD SAFETY REAR DOOR LOCK

Child safety rear door locks help prevent the rear doors from being opened accidentally, especially when small children are in the vehicle.

When the levers are in the lock position ①, the rear doors can be opened only from the outside.

To disengage, move the levers to the unlock position ②.

REMOTE KEYLESS ENTRY SYSTEM (if so equipped)

It is possible to lock/unlock all doors (including the back door), and activate the panic alarm by using the keyfob from outside the vehicle.

Before locking the doors, make sure the key is not left in the vehicle.

The keyfob can operate at a distance of approximately 33 ft (10 m) from the vehicle. (The effective distance depends upon the conditions around the vehicle.)

As many as 5 keyfobs can be used with one vehicle. For information concerning the purchase and use of additional keyfobs, contact a NISSAN dealer.

The keyfob will not function:

- When the keyfob is not within the operational range.
- When the doors are open or not closed securely.
- When the key is in the ignition switch.
- When the battery is discharged.

WARNING

The remote keyless entry keyfob transmits radio waves when the buttons are pushed. The FAA advises that the radio waves may affect aircraft navigation and communication systems. Do not operate the keyfob while on an airplane. Make sure the buttons are not operated unintentionally when the unit is stored during a flight.

CAUTION

The following conditions or occurrences will damage the keyfob.

- **Do not allow the keyfob to become wet.**
- **Do not drop the keyfob.**
- **Do not strike the keyfob sharply against another object.**
- **Do not place the keyfob for an extended period in an area where temperatures exceed 140°F (60°C).**

If a keyfob is lost or stolen, NISSAN recommends erasing the ID code of that keyfob. This will prevent the keyfob from unauthorized use to unlock the vehicle. For information regarding the erasing procedure, please contact a NISSAN dealer.

If the indicator light on the keyfob does not illuminate when pushing the buttons, the keyfob battery may be discharged.

For information regarding the replacement of a battery, see “KEY BATTERY REPLACEMENT” in the “8. Maintenance and do-it-yourself” section.

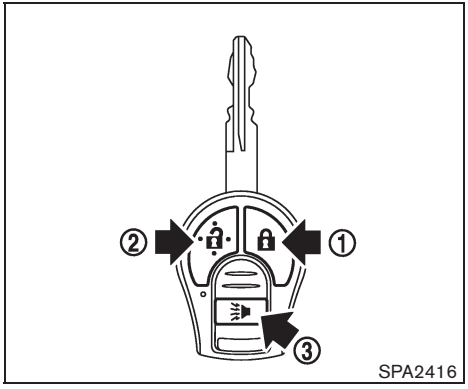

① LOCK button
② UNLOCK button
③ PANIC button

HOW TO USE REMOTE KEYLESS ENTRY SYSTEM

Locking doors

1. Remove the key from the ignition switch.
2. Close all the doors.
3. Push the LOCK button ① on the keyfob.
4. All the doors will lock.

   All of the doors will lock when the LOCK button is pushed even though a door remains open.

5. The hazard indicator flashes twice and the horn chirps once.

- When the LOCK button is pushed with all doors locked, the hazard indicator flashes twice and the horn chirps once as a reminder that the doors are already locked.
- Operate the door handles to confirm that the doors have been securely locked.

Unlocking doors

1. Push the UNLOCK button ② on the keyfob.
   - The driver's door unlocks.
   - The hazard indicator flashes once if all doors are completely closed.
2. Push the UNLOCK button again within 5 seconds.
   - All the doors and the back door unlock.
   - The hazard indicator flashes once if all doors are completely closed.

All doors will be locked automatically unless one of the following operations is performed within 1 minute of pushing the UNLOCK button.

- Opening any door (including the back door).
- Placing the ignition switch in the ON position.

Using panic alarm

If you are near your vehicle and feel threatened, you may activate the alarm to call attention as follows:

1. Push the PANIC button ③ on the keyfob for **more than 1 second.**
2. The theft warning alarm and headlights will stay on for 25 seconds.
3. The panic alarm stops when:
   - It has run for 25 seconds, or
   - Any of the buttons on the keyfob is pushed. (Note: the PANIC button must be pushed for more than 1 second.)

Setting hazard indicator and horn mode

This vehicle is set in hazard indicator and horn mode when you first receive the vehicle.

In hazard indicator and horn mode, when the LOCK button ① is pushed, the hazard indicator flashes twice and the horn chirps once. When the UNLOCK button ② is pushed, the hazard indicator flashes once.

If the horn chirp is not necessary, you can switch to hazard indicator only mode by following the switching procedure.

In hazard indicator only mode, when the LOCK button is pushed, the hazard indicator flashes twice. When the UNLOCK button is pushed, neither the hazard indicator nor the horn operates.

Mode (Pushing the or button)	**DOOR LOCK**	**DOOR UNLOCK**
Hazard indicator and horn mode	HAZARD - **twice** HORN - **once**	HAZARD - **once** HORN - none
Hazard indicator mode	HAZARD - **twice**	HAZARD - none

Switching procedure:

To switch the hazard indicator and horn operation, push the LOCK 🔒 ① and UNLOCK 🔓 ② buttons on the keyfob simultaneously for more than 2 seconds.

- When the hazard indicator mode is set, the hazard indicator flashes 3 times.
- When the hazard indicator and horn mode is set, the hazard indicator flashes once and the horn chirps once.

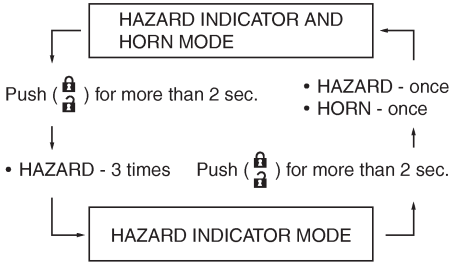

INTELLIGENT KEY SYSTEM (if so equipped)

⚠ WARNING

- **Radio waves could adversely affect electric medical equipment. Those who use a pacemaker should contact the electric medical equipment manufacturer for the possible influences before use.**
- **The Intelligent Key transmits radio waves when the buttons are pushed. The FAA advises that the radio waves may affect aircraft navigation and communication systems. Do not operate the Intelligent Key while on an airplane. Make sure the buttons are not operated unintentionally when the unit is stored during a flight.**

The Intelligent Key system can operate all the door locks using the remote controller function or pushing the request switch on the vehicle without taking the key out from a pocket or purse. The operating environment and/or conditions may affect the Intelligent Key system operation.

Be sure to read the following before using the Intelligent Key system.

⚠ CAUTION

- **Be sure to carry the Intelligent Key with you when operating the vehicle.**
- **Never leave the Intelligent Key in the vehicle when you leave the vehicle.**

The Intelligent Key is always communicating with the vehicle as it receives radio waves. The Intelligent Key system transmits weak radio waves. Environmental conditions may interfere with the operation of the Intelligent Key system under the following operating conditions.

- When operating near a location where strong radio waves are transmitted, such as a TV tower, power station and broadcasting station.
- When in possession of wireless equipment, such as a cellular phone, transceiver, and CB radio.
- When the Intelligent Key is in contact with or covered by metallic materials.
- When any type of radio wave remote control is used nearby.
- When the Intelligent Key is placed near an electric appliance such as a personal

computer.

- When the vehicle is parked near a parking meter.

In such cases, correct the operating conditions before using the Intelligent Key function or use the mechanical key.

Although the life of the battery varies depending on the operating conditions, the battery's life is approximately 2 years. If the battery is discharged, replace it with a new one.

Since the Intelligent Key is continuously receiving radio waves, if the key is left near equipment which transmits strong radio waves, such as signals from a TV and personal computer, the battery life may become shorter.

For information regarding replacement of a battery, see "KEY BATTERY REPLACEMENT" in the "8. Maintenance and do-it-yourself" section.

Because the steering wheel is locked electrically, unlocking the steering wheel with the ignition switch in the LOCK position is impossible when the vehicle battery is completely discharged. Always be careful that the vehicle battery is not completely discharged.

As many as 4 Intelligent Keys can be registered and used with one vehicle. For information about the purchase and use of additional Intelligent Keys, contact a NISSAN dealer.

CAUTION

- **Do not allow the Intelligent Key, which contains electrical components, to come into contact with water or salt water. This could affect the system function.**
- **Do not drop the Intelligent Key.**
- **Do not strike the Intelligent Key sharply against another object.**
- **Do not change or modify the Intelligent Key.**
- **Wetting may damage the Intelligent Key. If the Intelligent Key gets wet, immediately wipe until it is completely dry.**
- **Do not place the Intelligent Key for an extended period in an area where temperatures exceed 140°F (60°C).**
- **Do not attach the Intelligent Key with a key holder that contains a magnet.**
- **Do not place the Intelligent Key near equipment that produces a magnetic field, such as a TV, audio equipment, personal computers or cellular phone.**

If an Intelligent Key is lost or stolen, NISSAN recommends erasing the ID code of that Intelligent Key from the vehicle. This may prevent the unauthorized use of the Intelligent Key to operate the vehicle. For information regarding the erasing procedure, contact a NISSAN dealer.

The Intelligent Key function can be disabled. For information about disabling the Intelligent Key function, contact a NISSAN dealer.

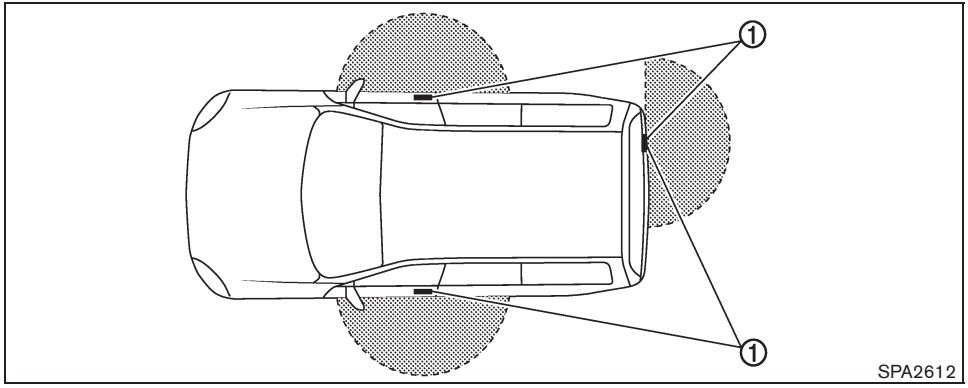

INTELLIGENT KEY OPERATING RANGE

The Intelligent Key functions can only be used when the Intelligent Key is within the specified operating range from the request switch ①.

When the Intelligent Key battery is discharged or strong radio waves are present near the operating location, the Intelligent Key system's operating range becomes narrower, and the Intelligent Key may not function properly.

The operating range is within 31.50 in (80 cm) from each request switch ①.

If the Intelligent Key is too close to the door glass, handle or rear bumper, the request switches may not function.

When the Intelligent Key is within the operating range, it is possible for anyone who does not carry the Intelligent Key to push the request switch to lock/unlock the doors including the back door.

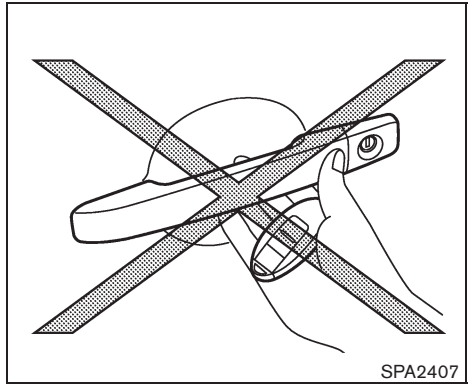

DOOR LOCKS/UNLOCKS PRECAUTION

- Do not push the door handle request switch with the Intelligent Key held in your hand as illustrated. The close distance to the door handle will cause the Intelligent Key system to have difficulty recognizing that the Intelligent Key is outside the vehicle.
- After locking with the door handle request switch, verify the doors are securely locked by testing them.
- To prevent the Intelligent Key from being left inside the vehicle, make sure you carry the key with you and then lock the doors.

- Do not pull the door handle before pushing the door handle request switch. The door will be unlocked but will not open. Release the door handle once and pull it again to open the door.

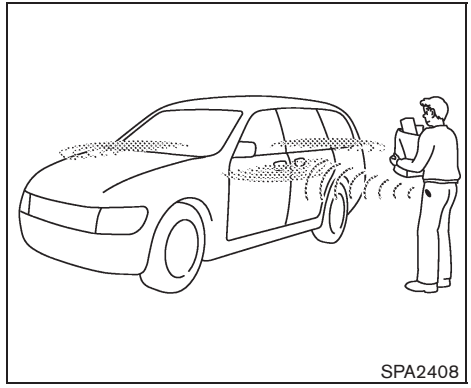
SPA2408

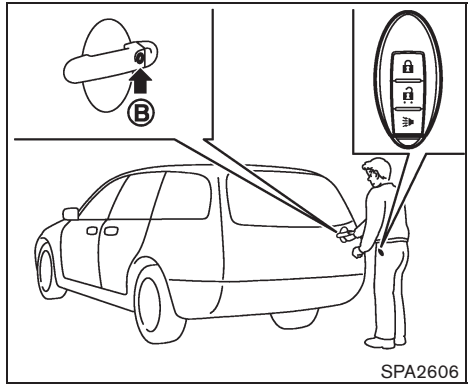

SPA2606

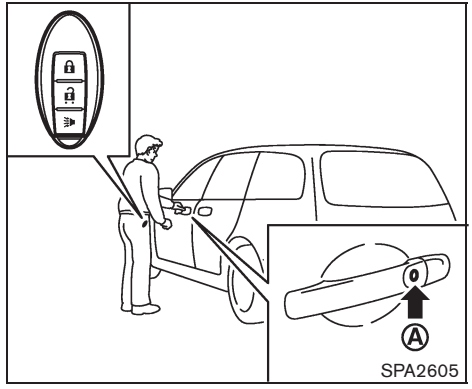

SPA2605

INTELLIGENT KEY OPERATION

You can lock or unlock the doors without taking the key out from your pocket or bag.

When you carry the Intelligent Key with you, you can lock or unlock all doors by pushing the door handle request switch (driver's or front passenger's) Ⓐ or back door request switch Ⓑ within the range of operation.

When you lock or unlock the doors, the hazard indicator will flash and the horn (or the outside chime) will sound as a confirmation. For details, see "Setting hazard indicator and horn mode" later in this section.

Locking doors

1. Place the ignition switch in the OFF position and carry the Intelligent Key with you.*1
2. Close all the doors.*2
3. Push the door handle request switch (driver's or front passenger's) Ⓐ or the back door request switch Ⓑ while carrying the Intelligent Key with you.*3
4. All the doors and the back door will lock.
5. The hazard indicator flashes twice and the outside chime sounds twice.

*1: Doors will lock with the request switch while the ignition switch is in the ACC or ON position.

*2: Doors will not lock with the request switch while any door is open.

*3: Doors will not lock with the request switch when the Intelligent Key is left inside the vehicle. However, when an Intelligent Key is inside the vehicle, doors can be locked with another registered Intelligent Key.

Unlocking doors

1. Push the door handle request switch Ⓐ or the back door request switch Ⓑ while carrying the Intelligent Key with you.
2. The hazard indicator flashes once and outside chime sounds once. The corresponding door or the back door will unlock.
3. Push the request switch again within 1 minute.
4. The hazard indicator flashes once and outside chime sounds once again. All the doors and the back door will unlock.

All doors will be locked automatically unless one of the following operations is performed within 1 minute after pushing the request switch while the doors are locked.

- Opening any door.
- Pushing the ignition switch.

During this 1-minute time period, if the UNLOCK button on the Intelligent Key is pushed, all doors will be locked automatically after another 1 minute.

BATTERY SAVER SYSTEM

When all the following conditions are met for 60 minutes, the battery saver system will cut off the power supply to prevent battery discharge.

- The ignition switch is in the ACC position, and
- All doors are closed, and
- The selector lever is in the P (Park) position.

WARNING LIGHTS AND AUDIBLE REMINDERS

To help prevent the vehicle from moving unexpectedly by erroneous operation of the Intelligent Key listed on the following chart or to help prevent the vehicle from being stolen, chime or beep sounds inside and outside the vehicle and a warning light illuminates or blinks.

When a chime or beep sounds or the warning light illuminates or blinks, be sure to check the vehicle and Intelligent Key.

See "TROUBLESHOOTING GUIDE" later in this section and "WARNING/INDICATOR LIGHTS AND AUDIBLE REMINDERS" in the "2. Instruments and controls" section.

Intelligent Key system warning light: KEY

P position selecting warning light: P SHIFT

TROUBLESHOOTING GUIDE

Symptom		Possible cause	Action to take
When pushing the ignition switch to stop the engine	The P position selecting warning light in the meter illuminates and the inside warning chime sounds continuously.	The selector lever is not in the P (Park) position.	Shift the selector lever to the P (Park) position.
When shifting the selector lever to the P (Park) position.	The inside warning chime sounds continuously.	The ignition switch is in the ACC or ON position.	Push the ignition switch to the OFF position.
When opening the driver's door to get out of the vehicle	The inside warning chime sounds continuously.	The ignition switch is in the ACC position.	Push the ignition switch to the OFF position.
When closing the door after getting out of the vehicle	The Intelligent Key system warning light in the meter blinks in yellow, and the outside chime sounds 3 times and the inside warning chime sounds for a few seconds.	The ignition switch is in the ACC or ON position.	Push the ignition switch to the OFF position.
	The P position selecting warning light in the meter illuminates and the outside chime sounds continuously.	The ignition switch is in the ACC or OFF position and the selector lever is not in the P (Park) position.	Move the selector lever to the P (Park) position and push the ignition switch to the OFF position.
When closing the door with the inside lock knob turned to LOCK	The outside chime sounds for a few seconds and all the doors unlock.	The Intelligent Key is inside the vehicle.	Carry the Intelligent Key with you.
When pushing the request switch or the LOCK button on the Intelligent Key to lock the door	The outside chime sounds for a few seconds.	The Intelligent Key is inside the vehicle.	Carry the Intelligent Key with you.
		A door is not closed securely.	Close the door securely.
When pushing the ignition switch to start the engine	The Intelligent Key system warning light in the meter blinks in green.	The battery charge is low.	Replace the battery with a new one. (See "KEY BATTERY REPLACEMENT" in the "8. Maintenance and do-it-yourself" section.)
	The Intelligent Key system warning light in the meter blinks in yellow and the inside warning chime sounds for a few seconds.	The Intelligent Key is not in the vehicle.	Carry the Intelligent Key with you.

Symptom		Possible cause	Action to take
When pushing the ignition switch	The Intelligent Key system warning light in the meter illuminates in yellow.	It warns of a malfunction with the electrical steering lock system or the Intelligent Key system.	Contact a NISSAN dealer.

HOW TO USE REMOTE KEYLESS ENTRY FUNCTION

WARNING

- **Radio waves could adversely affect electric medical equipment. Those who use a pacemaker should contact the electric medical equipment manufacturer for the possible influences before use.**
- **The Intelligent Key transmits radio waves when the buttons are pushed. The FAA advises that the radio waves may affect aircraft navigation and communication systems. Do not operate the Intelligent Key while on an airplane. Make sure the buttons are not operated unintentionally when the unit is stored during a flight.**

CAUTION

- **Do not allow the Intelligent Key, which contains electrical components, to come into contact with water or salt water. This could affect the system function.**
- **Do not drop the Intelligent Key.**
- **Do not strike the Intelligent Key sharply against another object.**
- **Do not change or modify the Intelligent Key.**
- **Wetting may damage the Intelligent Key. If the Intelligent Key gets wet, immediately wipe until it is completely dry.**
- **Do not place the Intelligent Key for an extended period in an area where temperatures exceed 140°F (60°C).**
- **Do not attach the Intelligent Key with a key holder that contains a magnet.**
- **Do not place the Intelligent Key near equipment that produces a magnetic field, such as a TV, audio equipment, personal computers or cellular phone.**

The remote keyless entry function can operate all door locks using the remote keyless entry function of the Intelligent Key. The remote keyless entry function can operate at a distance of approximately 33 ft (10 m) from the vehicle. (The operating distance depends upon the conditions around the vehicle.)

The remote keyless entry function will not operate:

- When the Intelligent Key is not within the operational range.
- When the doors are open or not closed securely.
- When the Intelligent Key battery is discharged.

The remote keyless entry function can also operate the vehicle alarm.

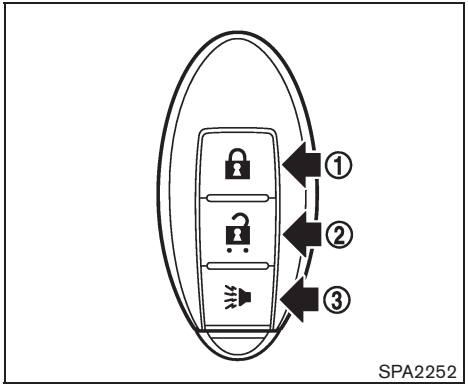

① LOCK button
② UNLOCK button
③ PANIC button

When you lock or unlock the doors, the hazard indicator will flash and the horn will sound as a confirmation. For details, see “Setting hazard indicator and horn mode” later in this section.

Locking doors

1. Place the ignition switch in the OFF position and carry the Intelligent Key with you.*1
2. Carry the Intelligent Key with you.
3. Close all the doors.*2
4. Push the LOCK button ① on the Intelligent Key.
5. All the doors and the back door will lock.
6. The hazard indicator flashes twice and the horn chirps once.

*1: Doors will lock with the Intelligent Key while the ignition switch is in the ACC or ON position.

*2: Doors will not lock with the Intelligent Key while any door is open.

Operate the door handles to confirm that the doors have been securely locked.

Unlocking doors

1. Push the UNLOCK button ② on the Intelligent Key once.
2. The hazard indicator flashes once. The driver’s door will unlock.
3. Push the UNLOCK button again within 1 minute.
4. The hazard indicator flashes once. All the doors and the back door will unlock.

All doors will be locked automatically unless one of the following operations is performed within 1 minute after pushing the UNLOCK button while the doors are locked.

- Opening any door (including the back door).
- Pushing the ignition switch.

During this 1-minute time period, if the UNLOCK button is pushed, all doors will be locked automatically after another 1 minute.

Using panic alarm

If you are near your vehicle and feel threatened, you may activate the alarm to call attention as follows:

1. Push the PANIC button ③ on the Intelligent Key for **more than 1 second.**
2. The theft warning alarm and headlights will stay on for 25 seconds.
3. The panic alarm stops when:
   - It has run for 25 seconds, or
   - Any of the buttons on the Intelligent Key is pushed. (Note: the PANIC button must be pushed for more than 1 second.)

Setting hazard indicator and horn mode

This vehicle is set in hazard indicator and horn mode when you first receive the vehicle.

In hazard indicator and horn mode, when the LOCK button ① is pushed, the hazard indicator flashes twice and the horn chirps once. When the UNLOCK button ② is pushed, the hazard indicator flashes once.

If horns are not necessary, the system can be switched to the hazard indicator mode.

In hazard indicator mode, when the LOCK button is pushed, the hazard indicator flashes twice. When the UNLOCK button is pushed, neither the hazard indicator nor the horn operates.

Hazard indicator and horn mode:

Operation	DOOR LOCK	DOOR UNLOCK
Pushing door handle request switch or back door request switch	HAZARD - **twice** OUTSIDE CHIME - **twice**	HAZARD - **once** OUTSIDE CHIME - **once**
Pushing or button	HAZARD - **twice** HORN - **once**	HAZARD - **once** HORN - none

Hazard indicator mode:

Operation	DOOR LOCK	DOOR UNLOCK
Pushing door handle request switch or back door request switch	HAZARD - **twice** OUTSIDE CHIME - none	HAZARD - none OUTSIDE CHIME - none
Pushing or button	HAZARD - **twice** HORN - none	HAZARD - none HORN - none

Switching procedure:

To switch the hazard indicator and horn (chime) operation, push the LOCK 🔒 ① and UNLOCK 🔓 ② buttons on the Intelligent Key simultaneously for more than 2 seconds.

- When the hazard indicator mode is set, the hazard indicator flashes 3 times.
- When the hazard indicator and horn mode is set, the hazard indicator flashes once and the horn chirps once.

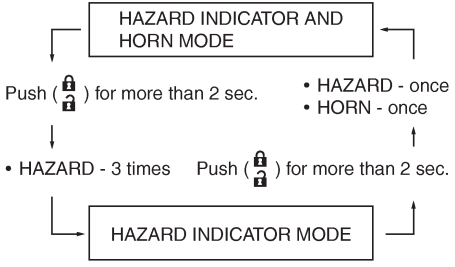

WARNING

- **Make sure the hood is completely closed and latched before driving. Failure to do so could cause the hood to fly open and result in an accident.**
- **If you see steam or smoke coming from the engine compartment, to avoid injury do not open the hood.**

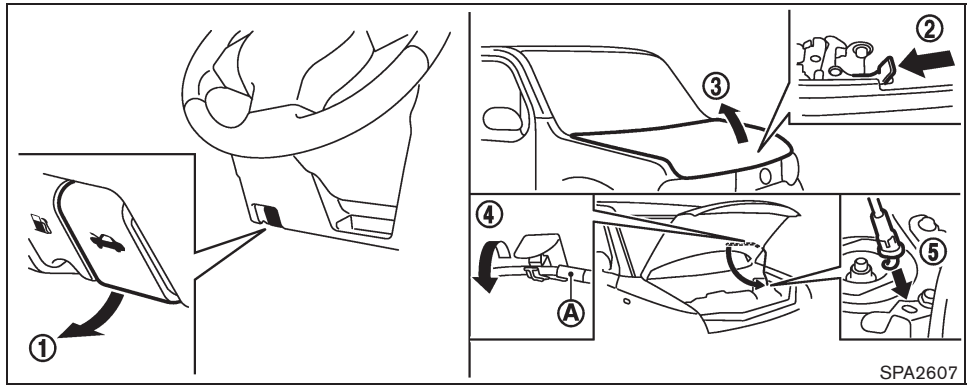

When opening the hood:

1. Pull the hood release handle ① located below the instrument panel; the hood will then spring up slightly.
2. Locate the lever ② in between the hood and grille, and push the lever sideways with your fingertips.
3. Raise the hood ③.
4. Remove the support rod ④ from the hood and insert it into the slot ⑤.

Hold the coated part Ⓐ when removing or resetting the support rod. Avoid direct contact with the metal parts, as they may be hot immediately after the engine has been stopped.

When closing the hood:

1. Return the support rod to its original position.
2. Slowly move the hood down to latch the lock.
3. Push the hood down to lock the hood securely into place.

WARNING

- **Always be sure the back door has been closed securely to prevent it from opening while driving.**
- **Do not drive with the back door open. This could allow dangerous exhaust gases to be drawn into the vehicle. See "EXHAUST GAS (carbon monoxide)" in the "5. Starting and driving" section of this manual.**
- **Make sure that all passengers have their hands, etc. inside the vehicle before closing the back door.**

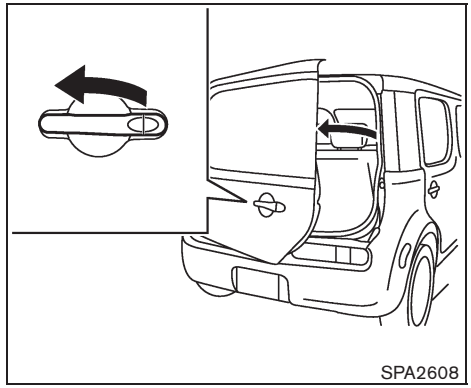
SPA2608

To open the back door, unlock it and pull the handle.

The back door can be unlocked by:

— pushing the unlock button on the keyfob or the Intelligent Key (if so equipped) twice.

— pushing the back door request switch (if so equipped).

— pushing the power door lock switch to the unlock position.

— inserting the key into the driver's door key cylinder and turning it to the rear of the vehicle twice.

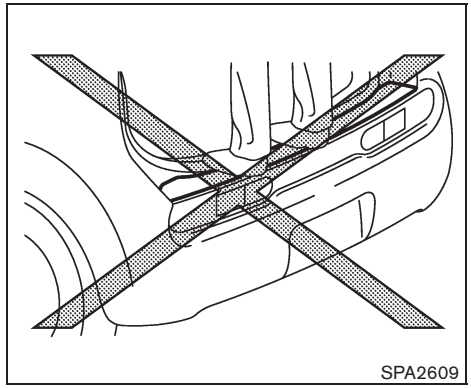
SPA2609

CAUTION

Do not step or place heavy objects on the back door opening (over the rear combination lights). Doing so could cause damage to the rear combination lights and/or personal injury.

BUMPERS AND SIDE SILL EXTENSIONS (Krōm models)

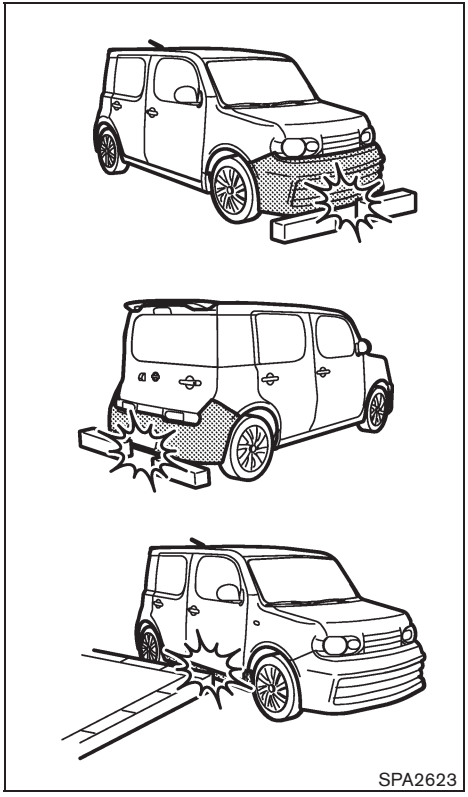
SPA2623

The Krōm models have unique front and rear bumpers and side sill extensions. These parts are close to the ground and may be damaged if they contact objects such as curbs, parking blocks, etc.

CAUTION

Reduce vehicle speed to decrease the possibility of damaging these parts when:

- **driving on bumpy or rutted roads**
- **entering or exiting parking garages and driveways**
- **driving over speed bumps.**

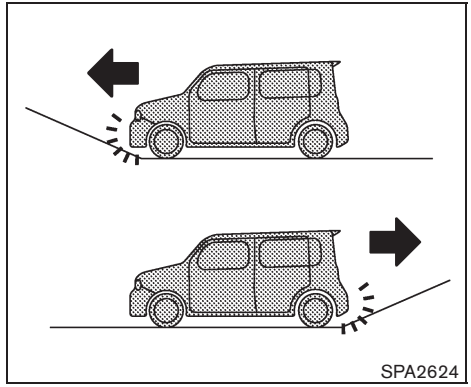
SPA2624

CAUTION

The approach and departure angles are small. Reduce vehicle speed when the vehicle approaches or leaves a steep hill. Otherwise, the front and rear bumpers may contact the road surface and be damaged.

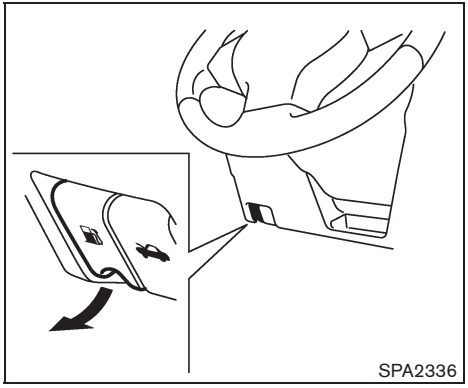

OPENING THE FUEL-FILLER DOOR

To open the fuel-filler door, pull the release handle located below the instrument panel. To lock, close the fuel-filler door securely.

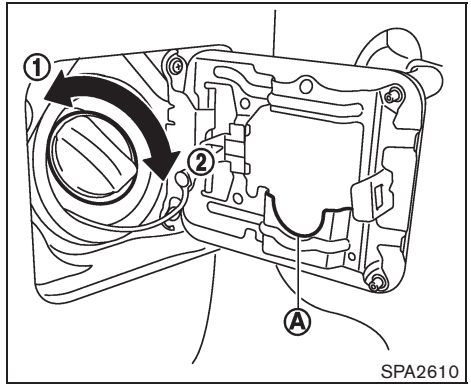

FUEL-FILLER CAP

The fuel-filler cap is a ratcheting type. Turn the cap counterclockwise (1) to remove. To tighten, turn the cap clockwise (2) until ratcheting clicks are heard.

Put the fuel-filler cap on the cap holder (A) while refueling.

WARNING

- **Gasoline is extremely flammable and highly explosive under certain conditions. You could be burned or seriously injured if it is misused or mishandled. Always stop engine and do not smoke or allow open flames or sparks near the vehicle when refueling.**
- **Do not attempt to top off the fuel tank after the fuel pump nozzle shuts off automatically. Continued refueling may cause fuel overflow, resulting in fuel spray and possibly a fire.**
- **Use only an original equipment type fuel-filler cap as a replacement. It has a built-in safety valve needed for proper operation of the fuel system and emission control system. An incorrect cap can result in a serious malfunction and possible injury. It could also cause the malfunction indicator light to come on.**
- **Never pour fuel into the throttle body to attempt to start your vehicle.**
- **Do not fill a portable fuel container in the vehicle or trailer. Static electricity can cause an explosion of flammable liquid, vapor or gas in any vehicle or trailer. To reduce the risk of serious injury or death when**

filling portable fuel containers:

— Always place the container on the ground when filling.

— Do not use electronic devices when filling.

— Keep the pump nozzle in contact with the container while you are filling it.

— Use only approved portable fuel containers for flammable liquid.

CAUTION

- If fuel is spilled on the vehicle body, flush it away with water to avoid paint damage.
- Insert the cap straight into the fuel-filler tube, then tighten until the fuel-filler cap clicks. Failure to tighten the fuel-filler cap properly may cause the SERVICE ENGINE SOON malfunction indicator light (MIL) to illuminate. If the SERVICE ENGINE SOON light illuminates because the fuel-filler cap is loose or missing, tighten or install the cap and continue to drive the vehicle. The SERVICE ENGINE SOON light should turn off after a few driving trips. If the SERVICE ENGINE SOON light does not turn off after a few driving trips, have the vehicle inspected by a NISSAN dealer.

For additional information, see “Malfunction Indicator Light (MIL)” in the “2. Instruments and controls” section.

WARNING

Do not adjust the steering wheel while driving. You could lose control of your vehicle and cause an accident.

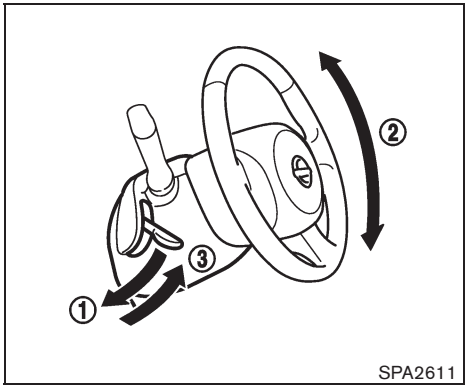

TILT OPERATION

Push the lock lever down ① and adjust the steering wheel up or down ② to the desired position.

Pull the lock lever up ③ securely to lock the steering wheel in place.

SUN VISORS

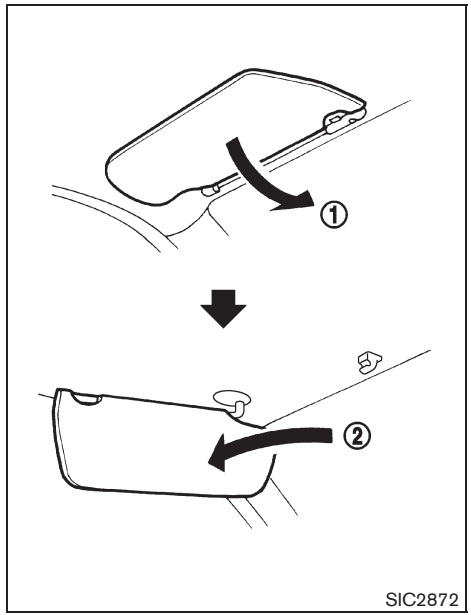

1. To block out glare from the front, swing down the sun visor ①.
2. To block glare from the side, remove the sun visor from the center mount and swing it to the side ②.

MIRRORS

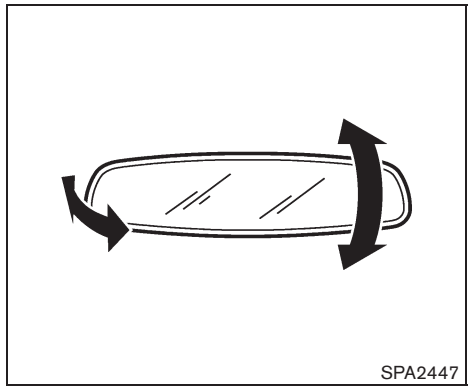

INSIDE MIRROR

Adjust the angle of the inside mirror to the desired position.

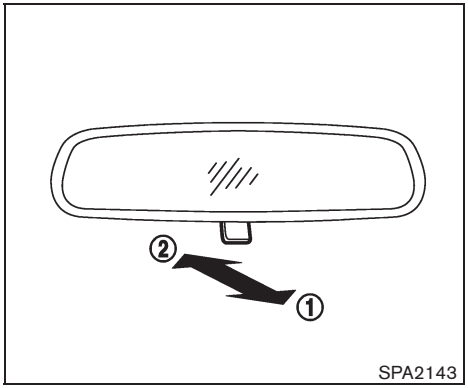

Manual anti-glare type

The night position ① will reduce glare from the headlights of vehicles behind you at night.

Use the day position ② when driving in daylight hours.

WARNING

Use the night position only when necessary, because it reduces rear view clarity.

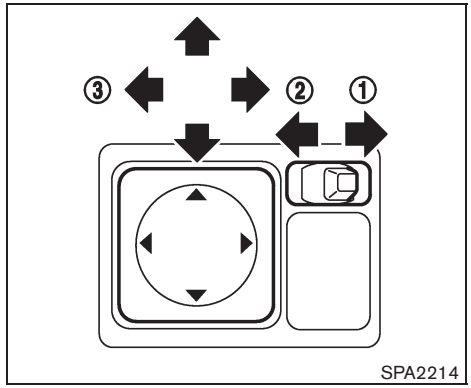

OUTSIDE MIRRORS

WARNING

Objects viewed in the outside mirror on the passenger side are closer than they appear. Be careful when moving to the right. Using only this mirror could cause an accident. Use the inside mirror or glance over your shoulder to properly judge distances to other objects.

Adjusting outside mirrors

The outside mirror control switch is located at the lower part of the instrument panel.

The outside mirror will operate only when the ignition switch is in the ACC or ON position.

Move the switch right ① or left ② to select the right or left side mirror, then adjust ③ using the control switch.

Defrosting outside mirrors (if so equipped)

The outside mirrors will be heated when the rear window defroster switch is operated. (See “REAR WINDOW AND OUTSIDE MIRROR DEFROSTER SWITCH” in the “2. Instruments and controls” section.)

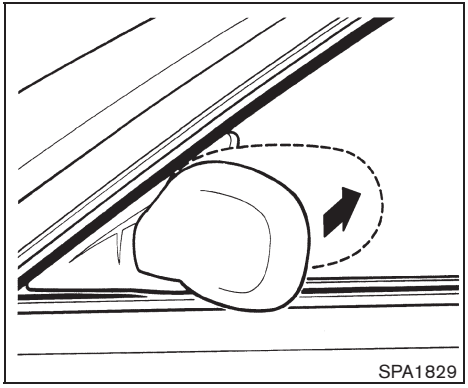

Foldable outside mirrors

Fold the outside mirror by pushing it toward the rear of the vehicle.

MEMO

MEMO

4 Heater, air conditioner, audio and phone systems

Ventilators 4-2
Center ventilators 4-2
Side ventilators 4-2
Heater and air conditioner 4-2
Manual air conditioner 4-3
Automatic air conditioner 4-6
Operating tips 4-8
In-cabin microfilter 4-8
Servicing air conditioner 4-9
Audio system 4-9
Audio operation precautions 4-9
FM-AM radio with Compact Disc (CD) player 4-17
FM-AM-SAT radio with Compact Disc (CD) player 4-21
CD care and cleaning 4-27
Steering wheel switch for audio control (if so equipped) 4-28
Antenna 4-29
Car phone or CB radio 4-31
Bluetooth® Hands-Free Phone System with NISSAN voice recognition (if so equipped) 4-31
Using system 4-33
Speaker Adaptation (SA) mode 4-42
Troubleshooting guide 4-45

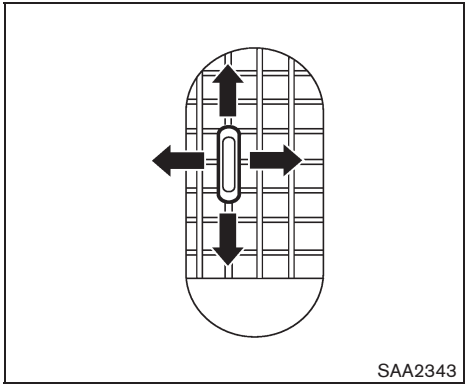

CENTER VENTILATORS

Open or close, and adjust the air flow direction of ventilators as illustrated.

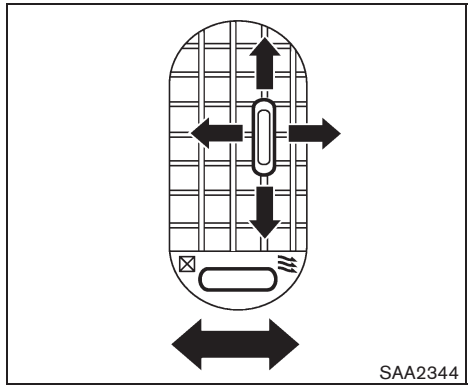

SIDE VENTILATORS

Adjust the air flow direction of ventilators as illustrated.

⊠ : This symbol indicates that the vents are closed.

≋ : This symbol indicates that the vents are open.

⚠ WARNING

- **The air conditioner cooling function operates only when the engine is running.**
- **Do not leave children or adults who would normally require the support of others alone in your vehicle. Pets should not be left alone either. On hot, sunny days, temperatures in a closed vehicle could quickly become high enough to cause severe or possibly fatal injuries to people or animals.**
- **Do not use the recirculation mode for long periods as it may cause the interior air to become stale and the windows to fog up.**

Start the engine and operate the heater and the air conditioner system.

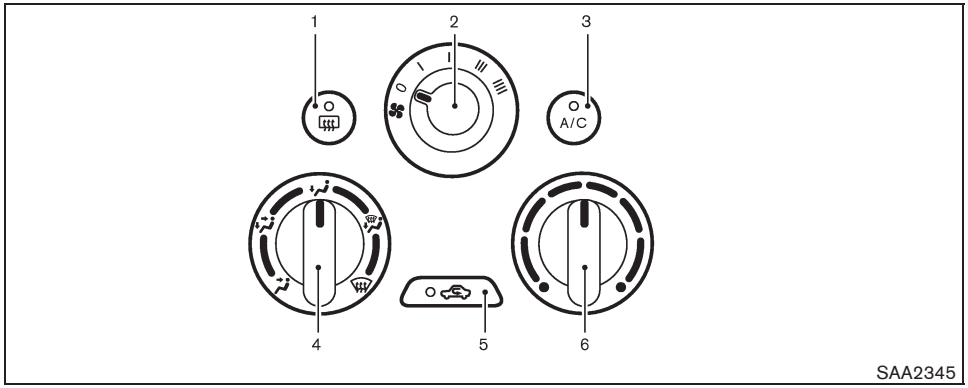

1. Rear window defroster button (See “REAR WINDOW AND OUTSIDE MIRROR DEFROSTER SWITCH” in the “2. Instruments and controls” section.)
2. Fan speed control dial
3. A/C (Air Conditioner) button (if so equipped)
4. Air flow control dial
5. Air recirculation button
6. Temperature control dial

To turn off the heater and air conditioner, turn the fan speed control dial to the OFF (0) position.

MANUAL AIR CONDITIONER

Controls

Outside air circulation:

Push the air recirculation button to turn off the indicator light on the button. The air flow is drawn from outside the vehicle.

Air recirculation:

Push the air recirculation button to turn on the indicator light on the button. The air flow is circulated inside the vehicle.

Air flow control:

Turn the air flow control dial to change the air flow mode.

— Air flows from the center and side ventilators.

— Air flows from the center and side ventilators and foot outlets.

— Air flows mainly from the foot outlets.

— Air flows from the defroster and foot outlets.

— Air flows mainly from the defroster outlets.

- With air conditioner system: When the or position is selected, the air conditioner will automatically turn on. This will dehumidify the air and help to defog the windows. The A/C indicator light will illuminate when the air conditioner automatically turns on. The air conditioner and A/C indicator light will remain on in all flow control modes until the A/C button is pressed or the fan control dial is turned to off.
- When the or position is selected, the air recirculation mode cannot be turned on to prevent the windows from being fogged up.

Fan speed control:

Turn the fan speed control dial clockwise to increase the fan speed.

Turn the fan speed control dial counter-clockwise to decrease the fan speed.

A/C (Air Conditioner) operation (if so equipped):

Push the A/C button to turn on or off the air conditioner. When the air conditioner is on, the A/C indicator light on the button illuminates.

Temperature control:

Turn the temperature control dial to set the desired temperature. Turn the dial between the middle and the right position (in red) to select the hot temperature. Turn the dial between the middle and the left position (in blue) to select the cool temperature.

Heater operation

Heating:

This mode is used to direct heated air to the foot outlets.

1. Push the air recirculation button to switch to the outside air circulation mode. (The indicator light turns off.)
2. Turn the air flow control dial to the position.
3. Turn the fan speed control dial to the desired position.
4. Turn the temperature control dial to the desired position between the middle and the hot (right) position.

Ventilation:

This mode directs outside air to the side and center ventilators.

1. Push the air recirculation button to switch to the outside air circulation mode. (The indicator light turns off.)
2. Turn the air flow control dial to the position.
3. Turn the fan speed control dial to the desired position.

Defrosting or defogging:

This mode directs the air to the defroster outlets to defrost/defog the windows.

1. Turn the air flow control dial to the position.
2. Turn the fan speed control dial to the desired position.
3. Turn the temperature control dial to the desired position between the middle and the hot (right) position.

- To remove frost from the outside surface of the windshield quickly, turn the temperature control dial to the maximum hot position and the fan speed control dial to maximum (IIII) position.
- With air conditioner system: When the position is selected, the air conditioner will automatically turn on. This will dehumidify the air and help to defog the windows. The A/C indicator light will illuminate when the air conditioner automatically turns on. The air conditioner and A/C indicator light will remain on in all flow control modes until the A/C button is pressed or the fan control dial is turned to off.

Bi-level heating:

This mode directs cool air from the side and center vents and warm air from the foot outlets. When the temperature control dial is turned to the maximum hot or cool position, the air between the ventilators and the foot outlets is the same temperature.

1. Push the air recirculation button to switch to the outside air circulation mode. (The indicator light turns off.)
2. Turn the air flow control dial to the position.

3. Turn the fan speed control dial to the desired position.
4. Turn the temperature control dial to the desired position.

Heating and defogging:

This mode heats the interior and defogs the windows.

1. Turn the air flow control dial to the position.
2. Turn the fan speed control dial to the desired position.
3. Turn the temperature control dial to the desired position.

With air conditioner system: When the position is selected, the air conditioner will automatically turn on. This will dehumidify the air and help to defog the windows. The A/C indicator light will illuminate when the air conditioner automatically turns on. The air conditioner and A/C indicator light will remain on in all flow control modes until the A/C button is pressed or the fan control dial is turned to off.

Air conditioner operation (if so equipped)

The air conditioner system should be operated for approximately 10 minutes at least once a month. This helps prevent damage to the air conditioner system due to the lack of lubrication.

Cooling:

This mode is used to cool and dehumidify the air.

1. Push the air recirculation button to switch to the outside air circulation mode. (The indicator light turns off.)
2. Turn the air flow control dial to the position.
3. Turn the fan speed control dial to the desired position.
4. Push the A/C button on. (The A/C indicator light will illuminate.)
5. Turn the temperature control dial to the desired position between the middle and the cool (left) position.

- For quick cooling when the outside temperature is high, push the air recirculation button to switch to the air recirculation mode. (The indicator light turns on.) Be sure to push the air recirculation button to the OFF position for normal cooling.
- A visible mist may be seen coming from the ventilators in hot, humid conditions as the air is cooled rapidly. This does not indicate a malfunction.

Dehumidified heating:

This mode is used to heat and dehumidify the air.

1. Push the air recirculation button to switch to the outside air circulation mode. (The indicator light turns off.)
2. Turn the air flow control dial to the position.
3. Turn the fan speed control dial to the desired position.
4. Push the A/C button on. (The A/C indicator light will illuminate.)
5. Turn the temperature control dial to the desired position between the middle and the hot (right) position.

Dehumidified defogging:

This mode is used to defog the windows and dehumidify the air.

1. Turn the air flow control dial to the position.
2. Turn the fan speed control dial to the desired position.
3. Turn the temperature control dial to the desired position.

When the position is selected, the air

conditioner will automatically turn on. This will dehumidify the air and help to defog the windows. The A/C indicator light will illuminate when the air conditioner automatically turns on. The air conditioner and A/C indicator light will remain on in all flow control modes until the A/C button is pressed or the fan control dial is turned to off.

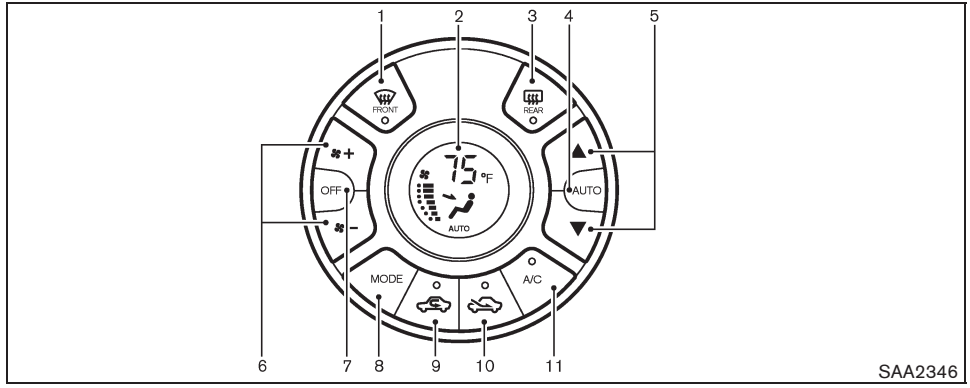

1 Front defroster button
2 Display*
3 Rear window defroster button (See “REAR WINDOW AND OUTSIDE MIRROR DEFROSTER SWITCH” in the “2. Instruments and controls” section.)
4 AUTO button
5 Temperature control ▲, ▼ button
6 Fan speed control +, – button
7 OFF button
8 MODE button
9 Air recirculation button
10 Outside air circulation button
11 A/C (Air Conditioner) button
*: Temperature is displayed °F (US) or °C (Canada).

AUTOMATIC AIR CONDITIONER

Automatic operation (AUTO)

The AUTO mode may be used year-round as the system automatically controls constant temperature, air flow distribution and fan speed.

To turn off the heater and air conditioner, push the OFF button.

Cooling and dehumidified heating:

1. Push the AUTO button. (The AUTO indicator will be displayed.)
2. If the A/C indicator light does not illuminate, push the A/C button. (The A/C indicator light will illuminate.)

3. Push the temperature control ▲, ▼ button to set the desired temperature. The temperature range is between 60°F (18°C) and 90°F (32°C).
4. To set the automatic control mode, perform one of the following operations.
   - When the outside air circulation mode is on, push and hold the outside air circulation button for more than 1.5 seconds.
   - When the air recirculation mode is on, push and hold the air recirculation button for more than 1.5 seconds.

   When setting the automatic control mode, both indicator lights will blink twice indicating that the system is in the automatic control mode.

A visible mist may be seen coming from the ventilators in hot, humid conditions as the air is cooled rapidly. This does not indicate a malfunction.

Heating (A/C off):

1. Push the AUTO button. (The AUTO indicator will be displayed.)
2. If the A/C indicator light illuminates, push the A/C button. (The A/C indicator light will turn off.)
3. Push the temperature control ▲, ▼ button to set the desired temperature. The temperature range is between 60°F (18°C) and 90°F (32°C).
   - Do not set the temperature lower than the outside air temperature. Doing so may cause the temperature to not be controlled properly.
   - If the windows fog up, use dehumidified heating instead of the A/C off heating.

Dehumidified defrosting/defogging:

1. Push the front defroster FRONT button. (The indicator light will illuminate.)
2. Turn the temperature control ▲, ▼ button to set the desired temperature.
   - To remove moisture or fog on the front window quickly, set the temperature to the high temperature and the fan speed to their maximum level.
   - After the windshield is cleared, push the front defroster FRONT button again. (The indicator light will turn off.)
   - When the front defroster FRONT button is pushed, the air conditioner will automatically turn on to defog the windshield. The outside air circulation mode will be selected to improve the defogging performance.

Manual operation

The manual mode can be used to control the heater and air conditioner to your desired settings.

To turn off the heater and air conditioner, push the OFF button.

Fan speed control:

Turn the fan speed control +, − dial to adjust the fan speed.

Air flow control:

Push the MODE button to change the air flow mode.

— Air flows from the center and side ventilators.

— Air flows from the center and side ventilators and foot outlets.

— Air flows mainly from the foot outlets.

— Air flows from the defroster outlets and foot outlets.

Temperature control:

Push the temperature control ▲, ▼ button to set the desired temperature.

The temperature range is between 60°F (18°C)

and 90°F (32°C).

Air recirculation:

Push the air recirculation button to change the air circulation mode. When the indicator light illuminates, the flowing air is recirculated inside the vehicle.

Outside air circulation:

Push the outside air circulation button to change the air circulation mode. When the indicator light illuminates, the flowing air is drawn from outside the vehicle.

Automatic air intake control:

To set the automatic control mode, perform one of the following operations.

- When the outside air circulation mode is on, push and hold the outside air circulation button for more than 1.5 seconds.
- When the air recirculation mode is on, push and hold the air recirculation button for more than 1.5 seconds.

When setting the automatic control mode, both indicator lights will blink twice indicating that the system is in the automatic control mode.

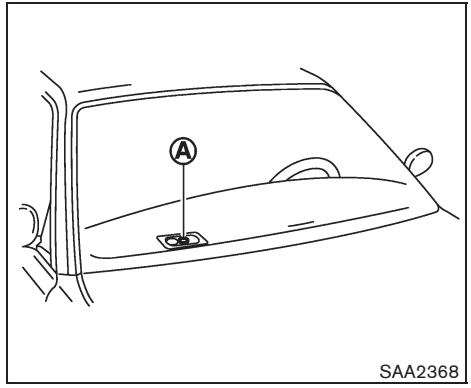

SAA2368

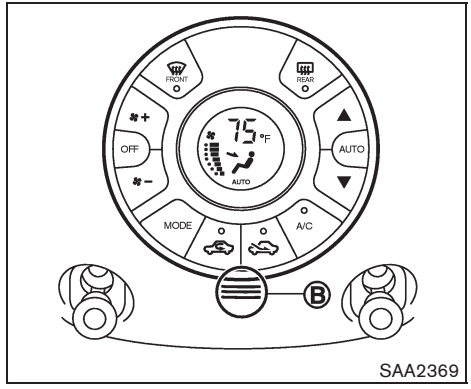

SAA2369

OPERATING TIPS

- When the engine coolant temperature and outside air temperature are low, the air flow from the foot outlets may not operate for a maximum of 150 seconds. This is not a malfunction. After the coolant temperature warms up, air will flow normally from the foot outlets.
- The automatic air conditioner (if so equipped) is equipped with sensors as illustrated. The sensors (A) and (B) on the instrument panel help maintain a constant temperature. Do not put anything on or around these sensors.

IN-CABIN MICROFILTER

The air conditioning system is equipped with an in-cabin microfilter which collects dirt, pollen, dust, etc. To make sure the air conditioner heats, defogs, and ventilates efficiently, replace the filter according to the specified maintenance log shown in the NISSAN Service and Maintenance Guide. To replace the filter, contact a NISSAN dealer.

The filter should be replaced if the air flow decreases significantly or if windows fog up easily when operating the heater or air conditioning system.

SERVICING AIR CONDITIONER

The air conditioner system in your NISSAN is charged with a refrigerant designed with the environment in mind. **This refrigerant will not harm the earth's ozone layer.** Special charging equipment and lubricant are required when servicing your NISSAN air conditioner. Using improper refrigerants or lubricants will cause severe damage to your air conditioner system. (See "CAPACITIES AND RECOMMENDED FUEL/LUBRICANTS" in the "9. Technical and consumer information" section for air conditioner system refrigerant and lubricant recommendations.)

A NISSAN dealer will be able to service your environmentally friendly air conditioner system.

WARNING

The system contains refrigerant under high pressure. To avoid personal injury, any air conditioner service should be done only by an experienced technician with the proper equipment.

AUDIO OPERATION PRECAUTIONS

Radio

Place the ignition switch in the ACC or ON position and push the PWR (power/VOL (volume) control to turn on the radio. If you listen to the radio with the engine not running, the ignition switch should be placed in the ACC position.

Radio reception is affected by station signal strength, distance from radio transmitter, buildings, bridges, mountains and other external influences. Intermittent changes in reception quality normally are caused by these external influences.

Using a cellular phone in or near the vehicle may influence radio reception quality.

Radio reception:

Your NISSAN radio system is equipped with state-of-the-art electronic circuits to enhance radio reception. These circuits are designed to extend reception range, and to enhance the quality of that reception.

However there are some general characteristics of both FM and AM radio signals that can affect radio reception quality in a moving vehicle, even when the finest equipment is used. These characteristics are completely normal in a given reception area, and do not indicate any malfunction in your NISSAN radio system.

Reception conditions will constantly change because of vehicle movement. Buildings, terrain, signal distance and interference from other vehicles can work against ideal reception. Described below are some of the factors that can affect your radio reception.

Some cellular phones or other devices may cause interference or a buzzing noise to come from the audio system speakers. Storing the device in a different location may reduce or eliminate the noise.

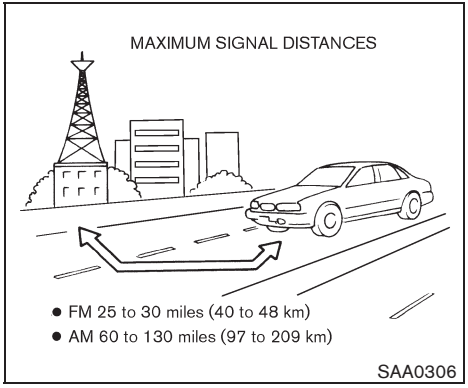

FM radio reception:

Range: FM range is normally limited to 25 to 30 miles (40 to 48 km), with monaural (single channel) FM having slightly more range than stereo FM. External influences may sometimes interfere with FM station reception even if the FM station is within 25 miles (40 km). The strength of the FM signal is directly related to the distance between the transmitter and receiver. FM signals follow a line-of-sight path, exhibiting many of the same characteristics as light. For example they will reflect off objects.

Fade and drift: As your vehicle moves away from a station transmitter, the signals will tend to fade and/or drift.

Static and flutter: During signal interference from buildings, large hills or due to antenna position, usually in conjunction with increased distance from the station transmitter, static or flutter can be heard. This can be reduced by lowering the treble setting to reduce the treble response.

Multipath reception: Because of the reflective characteristics of FM signals, direct and reflected signals reach the receiver at the same time. The signals may cancel each other, resulting in momentary flutter or loss of sound.

AM radio reception:

AM signals, because of their low frequency, can bend around objects and skip along the ground. In addition, the signals can be bounced off the ionosphere and bent back to earth. Because of these characteristics. AM signals are also subject to interference as they travel from transmitter to receiver.

Fading: Occurs while the vehicle is passing through freeway underpasses or in areas with many tall buildings. It can also occur for several seconds during ionospheric turbulence even in areas where no obstacles exist.

Static: Caused by thunderstorms, electrical power lines, electric signs and even traffic lights.

Satellite radio reception (if so equipped):

When the satellite radio is first installed or the battery has been replaced, the satellite radio may not work properly. This is not a malfunction. Wait more than 10 minutes with the satellite radio ON and the vehicle away from any metal or large buildings for the satellite radio to receive all of the necessary data.

The satellite radio mode requires an active XM® Satellite Radio subscription. The satellite radio is not available in Alaska, Hawaii and Guam.

Satellite radio performance may be affected if cargo carried on the roof blocks the satellite radio signal.

If possible, do not put cargo near the satellite antenna.

A buildup of ice on the satellite radio antenna can affect satellite radio performance. Remove the ice to restore satellite radio reception.

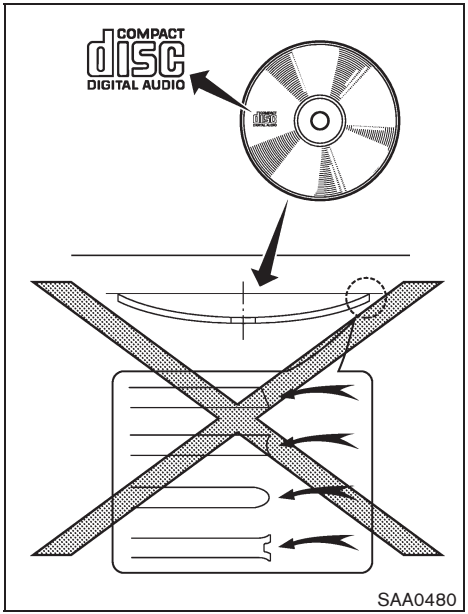

Compact Disc (CD) player

- **Do not force a compact disc into the CD insert slot. This could damage the CD and/or CD player.**
- **During cold weather or rainy days, the player may malfunction due to the humidity. If this occurs, remove the CD and dehumidify or ventilate the player completely.**
- **The player may skip while driving on rough roads.**
- **The CD player sometimes cannot function when the passenger compartment temperature is extremely high. Decrease the temperature before use.**
- **Only use high quality 4.7 in (12 cm) round discs that have the "COMPACT disc DIGITAL AUDIO" logo on the disc or packaging.**
- **Do not expose the CD to direct sunlight.**
- **CDs that are of poor quality, dirty, scratched, covered with fingerprints, or that have pin holes may not work properly.**
- **The following CDs may not work properly:**
  - **Copy control compact discs (CCCD)**
  - **Recordable compact discs (CD-R)**
  - **Rewritable compact discs (CD-RW)**
- **Do not use the following CDs as they may cause the CD player to malfunction.**
  - **3.1 in (8 cm) discs**
  - **CDs that are not round**
  - **CDs with a paper label**
  - **CDs that are warped, scratched, or have abnormal edges**
- **This audio system can only play prerecorded CDs. It has no capabilities to record or burn CDs.**
- **If the CD cannot be played, one of the following messages will be displayed.**

  Check Disc:

  - **Confirm that the CD is inserted correctly (the label side is facing up, etc.).**
  - **Confirm that the CD is not bent or warped and it is free of scratches.**

  Push Eject:

  This is an error due to the temperature inside the player is too high. Remove the CD by pushing the EJECT button, and after a short time reinsert the CD. The CD can be played when the temperature of the player returns to normal.

Unplayable Track:

The file is unplayable in this audio system (only MP3 or WMA CD).

Interface System for iPod® (if so equipped)

- Some characters used in other languages (Chinese, Japanese, etc.) are not displayed properly on the vehicle audio display. We recommend using English language characters with an iPod®.
- Large video podcast files cause slow responses in the iPod®. The vehicle audio display may momentarily black out, but it will soon recover.
- If the iPod® automatically selects large video podcast files while in the shuffle mode, the vehicle audio display may momentarily black out, but it will soon recover.
- Improperly plugging in the iPod® may cause a checkmark to be displayed on and off (flickering). Always make sure that the iPod® is connected properly.
- The iPod® nano (2nd Generation) will continue to fast forward or rewind if it is disconnected during a seek operation.
- An incorrect song title may appear when the Play Mode is changed while using the iPod® nano (2nd Generation).
- Audiobooks may not play in the same order as they appear on the iPod®.
- The iPod® nano (1st Generation) may remain in fast forward or rewind mode if it is connected during a seek operation. In this case, please manually reset the iPod®.
- If you are using an iPod® (3rd Generation with Dock connector), do not use very long names for the song title, album name or artist name to avoid the iPod® from resetting itself.
- Be careful not to do the following, or the cable could be damaged and a loss of function may occur.
  - — Bend the cable excessively (1.6 in (40 mm) radius minimum).
  - — Twist the cable excessively (more than 180 degrees).
  - — Pull or drop the cable.
  - — Store objects with sharp edges in the storage where the cable is stored.
  - — Spill liquids on the cable and connectors.
- Do not connect the cable to the iPod® if the cable and/or connectors are wet. It may damage the iPod®.
- If the cable and connectors are exposed to water, allow the cable and/or connectors to dry completely before connecting the cable to the iPod® (wait 24 hours for it to dry).
- If the connector is exposed to fluids other than water, evaporative residue may cause a short between the connector pins. In this case, replace the cable, otherwise damage to the iPod® and a loss of function may occur.
- If the cable is damaged (insulation cut, connectors cracked, contamination such as liquids, dust, dirt, etc. in the connectors), do not use the cable and contact a NISSAN dealer to replace the cable with a new one.
- When not in use for extended periods of time, store the cable in a clean, dust free environment at room temperature and without direct sun exposure.
- Do not use the cable for any other purposes other than its intended use in the vehicle.
- iPod® charging is only possible for devices that support charging via a FireWire® connection. Devices that can be charged by the iPod player include:
  - — iPod® Classic - 1st through 6th generation
  - — iPod® Mini - 1st and 2nd generation

— iPod® Nano - 1st through 3rd generation only

— iPod® Touch - first generation only

— iPhone® - first generation only

* The iPod® Classic and iPod® Touch may not charge properly in some cases.

* 12V charging is not possible on the iPhone 3G and later models.

* iPod® and FireWire® are trademarks of Apple Inc., registered in the U.S. and other countries.

Compact Disc (CD) with MP3 or WMA (if so equipped)

Explanation of terms:

- MP3 — MP3 is short for Moving Pictures Experts Group Audio Layer 3. MP3 is the most well-known compressed digital audio file format. This format allows for near "CD quality" sound, but at a fraction of the size of normal audio files. MP3 conversion of an audio track from CD-ROM can reduce the file size by approximately 10:1 ratio (Sampling: 44.1 kHz, Bit rate: 128 kbps) with virtually no perceptible loss in quality. MP3 compression removes the redundant and irrelevant parts of a sound signal that the human ear doesn't hear.
- WMA — Windows Media Audio (WMA) is a compressed audio format created by Microsoft as an alternative to MP3. The WMA codec offers greater file compression than the MP3 codec, enabling storage of more digital audio tracks in the same amount of space when compared to MP3s at the same level of quality.
- Bit rate — Bit rate denotes the number of bits per second used by a digital music files. The size and quality of a compressed digital audio file is determined by the bit rate used when encoding the file.
- Sampling frequency — Sampling frequency is the rate at which the samples of a signal are converted from analog to digital (A/D conversion) per second.
- Multisession — Multisession is one of the methods for writing data to media. Writing data once to the media is called a single session, and writing more than once is called a multisession.
- ID3/WMA Tag — The ID3/WMA tag is the part of the encoded MP3 or WMA file that contains information about the digital music file such as song title, artist, album title, encoding bit rate, track time duration, etc. ID3 tag information is displayed on the Album/Artist/Track title line on the display.

* Windows® and Windows Media® are registered trademarks or trademarks of Microsoft Corporation in the United States of America and other countries of Microsoft Corporation of the USA.

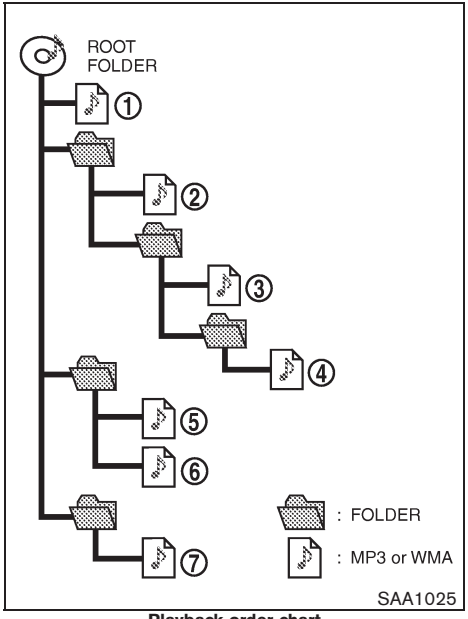

Playback order chart

Playback order:

Music playback order of a CD with MP3 or WMA files is as illustrated.

- The names of folders not containing MP3 or WMA files are not shown in the display.
- If there is a file in the top level of the disc, “Root Folder” is displayed.
- The playback order is the order in which the files were written by the writing software. Therefore, the files might not play in the desired order.

Specification chart:

Supported media			CD, CD-R, CD-RW
Supported file systems			ISO9660 LEVEL1, ISO9660 LEVEL2, Romeo, Joliet * ISO9660 Level 3 (packet writing) is not supported. * Files saved using the Live File System component (on a Windows Vista-based computer) are not supported.
Supported versions*1	MP3	Version	MPEG1, MPEG2, MPEG2.5
		Sampling frequency	8 kHz - 48 kHz
		Bit rate	8 kbps - 320 kbps, VBR*4
	WMA*2	Version	WMA7, WMA8, WMA9
		Sampling frequency	32 kHz - 48 kHz
		Bit rate	32 kbps - 192 kbps, VBR*4
Tag information (Song title and Artist name)			ID3 tag VER1.0, VER1.1, VER2.2, VER2.3 (MP3 only)
			WMA tag (WMA only)
Folder levels			Folder levels: 8, Folders and files: 999 (Max. 255 files for one folder)
Text character number limitation			64 characters
Displayable character codes*3			01: ASCII, 02: ISO-8859-1, 03: UNICODE (UTF-16 BOM Big Endian), 04: UNICODE (UTF-16 Non-BOM Big Endian), 05: UNICODE (UTF-8), 06: UNICODE (Non-UTF-16 BOM Little Endian)

*1 Files created with a combination of 48 kHz sampling frequency and 64 kbps bit rate cannot be played.
*2 Protected WMA files (DRM) cannot be played.
*3 Available codes depend on what kind of media, versions and information are going to be displayed.
*4 When VBR files are played, the playback time may not be displayed correctly.

Troubleshooting guide:

Symptom	Cause and Countermeasure
Cannot play	Check if the disc was inserted correctly.
	Check if the disc is scratched or dirty.
	Check if there is condensation inside the player. If there is, wait until the condensation is gone (about 1 hour) before using the player.
	If there is a temperature increase error, the CD player will play correctly after it returns to the normal temperature.
	Files with extensions other than “.MP3”, “.WMA”, “.mp3” or “.wma” cannot be played. In addition, the character codes and number of characters for folder names and file names should be in compliance with the specifications.
	Check if the disc or the file is generated in an irregular format. This may occur depending on the variation or the setting of MP3/WMA writing applications or other text editing applications.
	Check if the finalization process, such as session close and disc close, is done for the disc.
	Check if the disc is protected by copyright.
Poor sound quality	Check if the disc is scratched or dirty.
	Bit rate may be too low.
It takes a relatively long time before the music starts playing.	If there are many folder or file levels on the MP3/WMA disc, or if it is a multisession disc, some time may be required before the music starts playing.
Music cuts off or skips	The writing software and hardware combination might not match, or the writing speed, writing depth, writing width, etc., might not match the specifications. Try using the slowest writing speed.
Skipping with high bit rate files	Skipping may occur with large quantities of data, such as for high bit rate data.
Move immediately to the next song when playing.	When a non-MP3/WMA file has been given an extension of “.MP3”, “.WMA”, “.mp3” or “.wma”, or when play is prohibited by copyright protection, there will be approximately 5 seconds of no sound and then the player will skip to the next song.
The songs do not play back in the desired order.	The playback order is the order in which the files were written by the writing software. Therefore, the files might not play in the desired order.

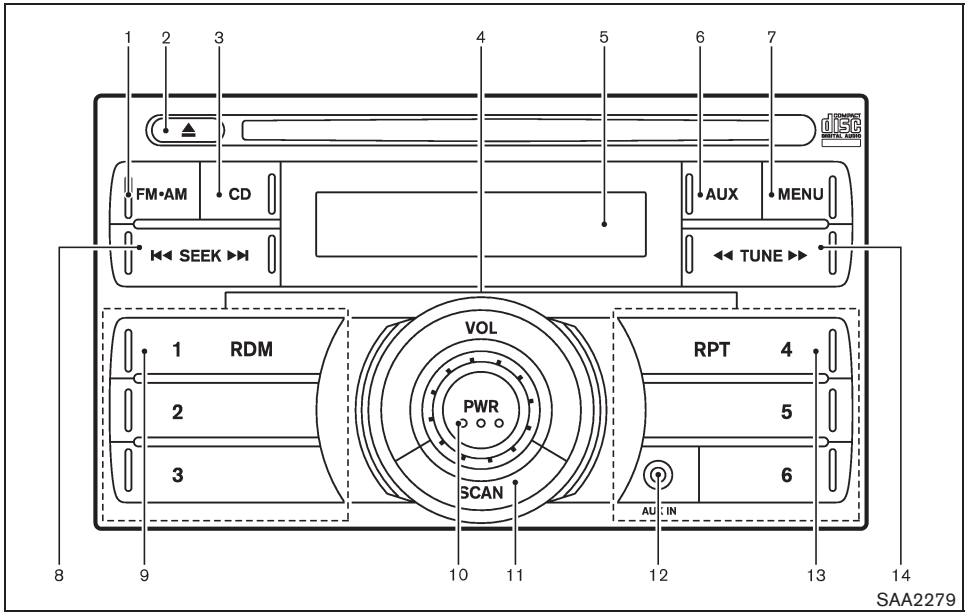

1. FM·AM radio band select button
2. CD EJECT button
3. CD button
4. Station and preset select buttons
5. Audio display
6. AUX (auxiliary) button
7. MENU button
8. SEEK/APS (automatic program search) FF (fast forward)·APS REW (rewind) button
9. RDM (random) button
10. PWR (power) button/VOL (volume) control knob
11. SCAN tuning button
12. AUX IN jack
13. RPT (repeat) button
14. TUNE/FF·REW button

FM-AM RADIO WITH COMPACT DISC (CD) PLAYER

For all operation precautions, see “AUDIO OPERATION PRECAUTIONS” earlier in this section.

Audio main operation

Head unit:

The auto loudness circuit enhances the low and high frequency ranges automatically in both radio reception and CD playback.

ON·OFF/Volume control:

Place the ignition switch in the ACC or ON position, and then push the PWR button while the system is off to call up the mode (radio, CD or AUX) which was playing immediately before the system was turned off. While the system is on, pushing the PWR button turns the system off.

Turn the VOL control knob to adjust the volume.

MENU button:

Push the MENU button to change the selecting mode as follows.

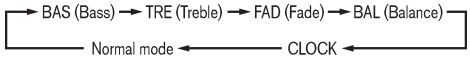

Push the TUNE ◀◀ or ▶▶ or SEEK |◀◀ or ▶▶| button to adjust Bass, Treble, Fade and Balance to the desired level. Fade adjusts the sound level between the front and rear speakers and Balance adjusts the sound between the right and left speakers.

Once you have adjusted the sound quality to the desired level, push the MENU button repeatedly until the radio or CD display reappears (normal mode). Otherwise, the radio or CD display will automatically reappear after approximately 10 seconds.

For information about adjusting the clock display, see “CLOCK” in the “2. Instruments and controls” section.

FM-AM radio operation

FM•AM Radio (FM/AM) band select:

Pushing the radio band select button will change the band as follows:

AM → FM1 → FM2 → AM

When the radio band select button is pushed while the ignition switch is in the ACC or ON position, the radio will come on at the station last played.

The last station played will also come on when the PWR button is pushed to ON.

If another audio source is playing when the radio band select button is pushed, the audio source will automatically be turned off and the last radio station played will come on.

When the stereo broadcast signal is weak, the radio will automatically change from stereo to monaural reception.

◀◀ TUNE ▶▶ TUNE (Tuning):

Push the TUNE button ◀◀ or ▶▶ for manual tuning.

|◀◀ SEEK ▶▶| SEEK tuning:

Push the SEEK button |◀◀ or ▶▶| to tune from low to high or high to low frequencies and to stop at the next broadcasting station.

SCAN SCAN tuning:

Push the SCAN tuning button to tune from low to high frequencies and stops at each broadcasting station for 5 seconds. Pushing the button again during this 5 seconds period will stop SCAN tuning and the radio will remain tuned to that station.

If the SCAN tuning button is not pushed within 5 seconds, SCAN tuning moves to the next station.

1 to 6 Station memory operations:

Twelve stations can be set for the FM band (6 each for FM1 and FM2) and 6 stations can be set for the AM band.

1. Choose the radio band AM, FM1 or FM2 using the radio band select button.
2. Tune to the desired station using the SEEK, SCAN or TUNE button.
3. Select the desired station and push and hold the desired station preset buttons 1 to 6 until a beep sound is heard. (The radio mutes when the select button is pushed.)
4. The station indicator will then come on and the sound will resume. Memorizing is now complete.
5. Other buttons can be set in the same manner.

If the battery cable is disconnected, or if the fuse blows, the radio memory will be erased. In that case, reset the desired stations.

Compact Disc (CD) player operation

Place the ignition switch in the ACC or ON position, and insert the CD into the slot with the label side facing up. The CD will be guided automatically into the slot and start playing.

After loading the disc, the number of tracks on the disc will appear on the display.

If the radio is already operating, it will automatically turn off and the CD will play.

If the system has been turned off while the CD was playing, pushing the PWR button will start the CD.

MP3 or WMA CDs are not supported with this CD player. If an MP3 or WMA CD is inserted into the slot, the counter on the audio display automatically advances without sound. However this is a specification of the CD mechanism and not a malfunction.

Do not use 3.1 in (8 cm) discs.

CD CD PLAY:

When the CD button is pushed with the system off and the CD loaded, the system will turn on and the CD will start to play.

When the CD button is pushed with the CD loaded and the radio playing, the radio will automatically be turned off and the CD will start to play.

◀◀ TUNE ▶▶ FF (Fast Forward), REW (Rewind):

When the ▶▶ (fast forward) or ◀◀ (rewind) of the TUNE button is pushed while the CD is being played, the CD will play while fast forwarding or rewinding.

When the button is released, the CD will return to normal play speed.

⏮ SEEK ⏭ APS (Automatic Program Search) FF, APS REW:

When the ▶▶| (APS FF) of the SEEK button is pushed while the CD is being played, the next track or the current track on the CD will start to play from its beginning. Push several times to skip through tracks. The CD will advance the number of times the button is pushed. (When the last track on the CD is skipped through, the first track will be played.)

When the |◀◀ (APS REW) button is pushed, the track being played returns to its beginning. Push several times to skip back through tracks. The CD will go back the number of times the button is pushed.

RPT RDM REPEAT (RPT)/RANDOM (RDM) play:

When the RPT or RDM button is pushed while a CD is being played, the play pattern can be changed as follows:

RPT button:

1 Disc Repeat (Normal play) ↔ 1 Track Repeat

RDM button:

1 Disc Repeat (Normal play) ↔ 1 Disc Random

The display shows the following symbols:

(No mark): 1 Disc Repeat
1: 1 Track Repeat
RDM: 1 Disc Random

⏏ CD EJECT:

When the CD EJECT button is pushed with the CD loaded, the CD will be ejected.

When this button is pushed while the CD is being played, the CD will come out and the system will turn off.

If the CD comes out and is not removed, it will be pulled back into the slot to protect it.

SCAN SCAN tuning:

When the SCAN tuning button is pushed while the CD is being played, the beginning of all the tracks of the CDs will be played for 10 seconds in sequence.

Pushing the button again during this 10 second period will stop SCAN tuning.

If the SCAN tuning button is not pushed within 10 seconds, SCAN tuning continues to move to the next CD track.

AUX (Auxiliary) input

AUX IN jack:

The AUX IN jack is located on the audio unit. The AUX IN audio input jack accepts any standard analog audio input such as from a portable cassette tape/CD player, MP3 player or laptop computer.

AUX AUX (Auxiliary) button:

Push the AUX button to play a compatible device when it is plugged into the AUX IN jack.

When the AUX button is pushed with no device plugged into the jack, the audio system does not change to the AUX mode (the AUX button is invalid).

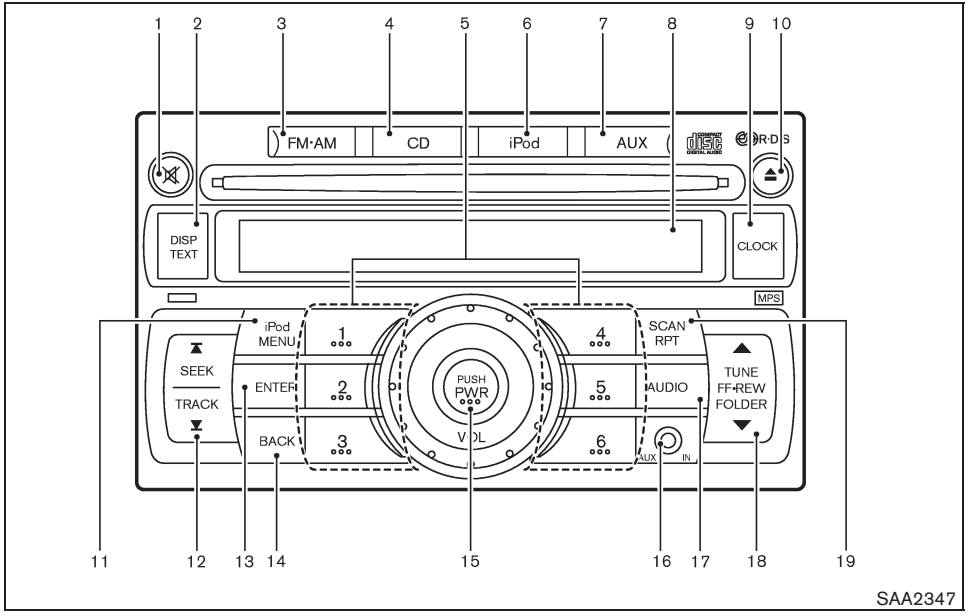

1. MUTE button
2. DISP (display)/TEXT button
3. FM·AM radio band select button
4. CD PLAY button
5. Station preset buttons
6. iPod® button
7. AUX (auxiliary) button
8. Audio display
9. CLOCK button
10. CD EJECT button
11. iPod® MENU button
12. SEEK/TRACK button
13. ENTER button
14 BACK button
15. PWR (power) button/VOL (volume) control knob
16 AUX IN jack
17. AUDIO button
18. TUNE/FF·REW button
19. SCAN/RPT (repeat) button

FM-AM-SAT RADIO WITH COMPACT DISC (CD) PLAYER

For all operation precautions, see “AUDIO OPERATION PRECAUTIONS” earlier in this section.

No satellite radio reception is available when the SAT band option is selected unless the optional satellite receiver and antenna are installed, and there is an active XM Satellite Radio subscription.

It may take some time to receive the activation signal after subscribing to the XM Satellite Radio provider. After receiving the activation signal, an available station list will be automatically updated in the radio. Place the ignition switch from the LOCK to the ACC position to update the station list.

Satellite radio is not available in Alaska, Hawaii and Guam.

Audio main operation

Head unit:

The auto loudness circuit enhances the low and high frequency ranges automatically in both radio reception and CD playback.

ON·OFF/Volume control:

Place the ignition switch in the ACC or ON position, and then push the PWR button while the system is off to call up the normal mode (radio, CD, AUX and iPod) which was playing immediately before the system was turned off. While the system is on, pushing the PWR button turns the system off.

Turn the VOL control knob to adjust the volume.

MUTE button:

Push the button to mute the audio sound.

Push the button again to release the mute setting.

AUDIO button:

Push the AUDIO button to change the selecting mode as follows.

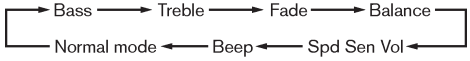

Push the TUNE (▲ , ▼) or SEEK (▼ , ▲) button to adjust Bass and Treble to the desired level. Use the TUNE or SEEK button also to adjust Fade or Balance modes. Fade adjusts the sound level between the front and rear speakers and Balance adjusts the sound between the right and left speakers.

To turn the beep sound off or on, push the TUNE or SEEK button until the desired mode is displayed. This turns on or off the beep sound when audio buttons are pushed.

To change the Speed Sensitive Volume (Spd Sen Vol) mode to OFF, LOW, MID or HIGH, push the TUNE or SEEK button until the desired mode is displayed.

Once you have adjusted the sound quality to the desired level, push the AUDIO button repeatedly until the normal mode display reappears. Otherwise, the normal mode display will automatically reappear after approximately 5 seconds.

CLOCK button:

Push the CLOCK button to turn on or off the CLOCK display.

See “CLOCK” in the “2. Instruments and controls” section for the detailed clock adjustment operation.

AUX (Auxiliary)/SAT radio band select:

Pushing the AUX button will change between the auxiliary input and the XM Satellite Radio bands (if so equipped) as follows:

XM1 → XM2 → XM3 → AUX → XM1

The satellite radio mode will be skipped unless an optional satellite receiver and antenna are installed and an XM Satellite Radio subscription is active. Satellite radio is not available in Alaska, Hawaii and Guam.

If an AUX device is not connected, this mode will be skipped.

See “Radio operation” later in this section for details about using this button for the satellite radio mode.

See “AUX (Auxiliary) input” later in this section for details about using this button when connecting this audio system with AUX devices.

Radio operation

Radio (FM/AM) band select:

Pushing the FM·AM radio band select button will change the band as follows:

AM → FM1 → FM2 → AM

When the stereo broadcast signal is weak, the radio will automatically change from stereo to monaural reception.

When the radio band select button is pushed while the ignition switch is in the ACC or ON position, the radio will come on at the station last played.

AUX SAT radio band select:

The last station played will also come on when the PWR button is pushed to ON.

If another audio source is playing when the satellite radio band select button is turned to ON, the audio source will automatically be turned off and the last radio station played will come on.

▼ ▲ TUNE (Tuning):

Push the TUNE button ▼ or ▲ for manual tuning. To move quickly through the stations, push and hold the TUNE button.

SEEK tuning:

- For AM and FM radio

  Push the SEEK button or to tune from low to high or high to low frequencies and to stop at the next broadcasting station.

- For XM Satellite Radio (if so equipped)

  Push the SEEK button or to tune to the first channel of the next or previous category.

SCAN RPT SCAN tuning:

Push the SCAN button to tune from low to high frequencies and stops at each broadcasting station for 5 seconds. Pushing the button again during this 5 seconds period will stop SCAN tuning and the radio will remain tuned to that station.

If the SCAN tuning button is not pushed within 5 seconds, SCAN tuning moves to the next station.

1 to 6 Station memory operations:

Eighteen channels can be set for the SAT (if so equipped) band (6 each for XM1, XM2 and XM3), 12 stations can be set for the FM band (6 each for FM1 and FM2), and 6 can be set for the AM band for easy access.

1. Choose the radio band using the radio band select button.
2. Tune to the desired station using the SEEK, SCAN or TUNE button.
3. Push and hold the desired radio station preset button 1 to 6 until a beep sound is heard. (The radio mutes when the radio station preset button is pushed.)
4. The station indicator will then come on and the sound will resume. Memorizing is now complete.
5. Other buttons can be set in the same manner.

If the battery cable is disconnected, or if the fuse opens, the radio memory will be erased. In that case, reset the desired stations.

Radio Data System (RDS):

RDS stands for Radio Data System, and is a data information service transmitted by some radio stations on the FM band (not AM band) encoded within a regular radio broadcast. Currently, most RDS stations are in large cities, but many stations are now considering broadcasting RDS data.

RDS can display:

- Station call sign, such as “WHFR 98.3”.
- Station name, such as “The Groove”.
- Music or programming type such as “Classical”, “Country” or “Rock”.
- Traffic reports about delays or construction.

If the station broadcasts RDS information, the RDS icon is displayed.

DISP TEXT RADIO DISPLAY change:

When the DISP button is pushed during the FM or SAT (if so equipped) radio mode, the radio display will change in the following order.

FM radio:

Frequency ↔ PS/PTY

In the FM radio mode, pressing the DISP button will switch the frequency display to the PTY display (if available), and if the DISP button is not pushed again within 5 seconds, it will automatically switch to the PS display. If PTY is not available, pressing the DISP button will only switch between the frequency display and the PS display.

XM Satellite Radio:

Compact Disc (CD) player operation

Place the ignition switch in the ACC or ON position, and insert the CD into the slot with the label side facing up. The CD will be guided automatically into the slot and start playing.

After loading the disc, the number of tracks on the disc will appear on the display.

If the radio is already operating, it will automatically turn off and the CD will play.

If the system has been turned off while the CD was playing, pushing the PWR button will start the CD.

Do not use 3.1 in (8 cm) discs.

CD CD PLAY:

When the CD button is pushed with the system off and the CD loaded, the system will turn on and the CD will start to play.

When the CD button is pushed with the CD loaded and the radio playing, the radio will automatically be turned off and the CD will start to play.

DISP TEXT CD play information:

When the DISP button is pushed for less than 1.5 seconds while the CD is being played, the disc information display will change as follows:

CD:

CD with MP3 or WMA:

▲ ▼ FF (Fast Forward), REW (Rewind):

CD:

When the ▲ (fast forward) or ▼ (rewind) button is pushed while the CD is being played, the CD will play while fast forwarding or rewinding. When the button is released, the CD will return to normal play speed.

CD with MP3 or WMA:

When the ▲ or ▼ button is pushed for less than 1.5 seconds while the CD is being played, the folders in the CD will change.

When the ▲ or ▼ button is pushed for more than 1.5 seconds while the CD is being played, the CD will play while forwarding or rewinding. When the button is released, the CD

will return to the normal play speed.

APS (Automatic Program Search) FF, APS REW:

When the ▲ (APS FF) button is pushed while the CD is being played, the program next to the present one will start to play from its beginning. Push several times to skip through programs. The CD will advance the number of times the button is pushed. (When the last program on the CD is skipped through, the first program will be played.)

When the ▼ (APS REW) button is pushed, the program being played returns to its beginning. Push several times to skip back through programs. The CD will go back the number of times the button is pushed.

SCAN RPT SCAN tuning:

When the SCAN tuning button is pushed for more than 1.5 seconds while the CD is being played, the beginning of all the tracks of CD will be played for 10 seconds in sequence.

Pushing the button again during this 10 second period will stop SCAN tuning.

If the SCAN tuning button is not pushed within 10 seconds, SCAN tuning moves to the next disc program.

SCAN RPT RANDOM (RDM)/REPEAT (RPT):

When the RPT button is pushed for less than 1.5 seconds while the CD is being played, the play pattern can be changed as follows:

CD:

CD with MP3 or WMA:

CD EJECT:

When the CD EJECT button is pushed with the CD loaded, the CD will be ejected.

When this button is pushed while the CD is being played, the CD will come out and the system will turn off.

If the CD comes out and is not removed, it will be pulled back into the slot to protect it.

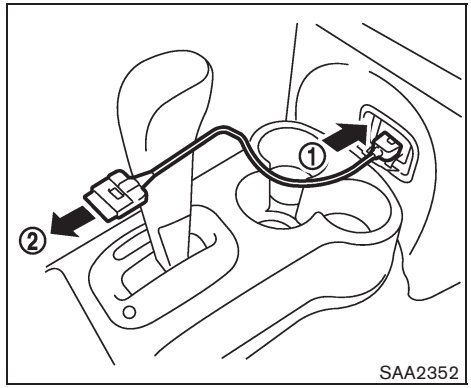

Interface system for iPod® operation

Connecting iPod®:

The iPod® outlet connector is on the lower center of the instrument panel. Connect the cable ① as illustrated, and then connect the other end of the cable to your iPod® ②. Your vehicle is equipped with the specialized cable for connecting the iPod® to your vehicle audio unit. The battery of your iPod® is charged while it is connected to the vehicle if the iPod® supports charging via a FireWire® connection.

When the connection is complete, a NISSAN logo will be displayed on the iPod® and an iPod® icon on the audio display illuminates. While connecting the iPod® to the vehicle, the iPod®

can only be operated by the vehicle audio controls.

To disconnect the cable from the vehicle outlet, fully depress the center connector button to unlatch the connector and pull the connector straight out of the outlet. To disconnect the cable from the iPod®, fully depress the side connector buttons and pull the iPod® connector straight out of the iPod®.

* iPod® is a trademark of Apple Inc., registered in the U.S. and other countries.

Compatibility:

The following models are available:

- Third generation iPod® (Firmware version 2.3 or later) (Audiobook and Podcast are not available)
- Fourth generation iPod® (Firmware version 3.1.1 or later)
- Fifth generation iPod® (Firmware version 1.1.2 or later)
- 5.5 generation iPod® (Firmware version 1.2.3 or later)
- iPod® mini (Firmware version 1.41 or later)
- iPod® photo (Firmware version 1.2.1 or later)
- iPod® nano (Firmware version 1.2 or later)
- The first generation iPod® classic (Firmware version 1.0.3 or later)

The fourth generation iPod® nano, iPod® touch, the second generation iPod classic and iPhone 3G may not work with the system in some cases.

Make sure that your iPod® firmware is updated.

iPod iPod® button:

Place the ignition switch in the ACC or ON position. Then, push the iPod® button to switch to the iPod® mode.

If another audio source is playing and the iPod® is connected, pushing the iPod® button changes to the iPod® mode.

If the system has been turned off while the iPod® was playing, pushing the PWR button will start the iPod®.

iPod MENU Top menu item selecting:

When the iPod® MENU button is pushed while the iPod® is connected, the interface for iPod® operation is shown on the audio display. The items on the menu list can be scrolled by pushing the SEEK button ▲ or ▼ and the TUNE button ▲ or ▼ while the iPod® is operational. To select an item, push ENTER. The display can be changed as follows:

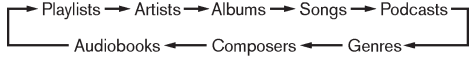

For more information about each item, see the iPod® Owner's Manual.

ENTER BACK BACK, ENTER button:

- When the ENTER button is pushed while the top menu is displayed, program details are shown on the audio display.
- To select the program, push to search using the SEEK ▲ or ▼ and ENTER button.
- When the BACK button is pushed, it returns to the previous display.

DISP TEXT iPod® play information:

When the DISP button is pushed while a program is being played, the program information display will change as follows:

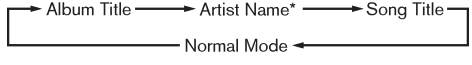

* Artist Name will not be displayed for a Podcast.

▲ ▼ FF (Fast Forward), REW (Rewind) button:

When the ▲ or ▼ button is pushed for more than 1.5 seconds while the iPod® is playing, the iPod® will play while fast forwarding or rewinding. When the button is released, the iPod® will return to the normal play speed.

When the ▲ or ▼ button is pushed for less than 1.5 seconds while the iPod® is playing, the next track or the beginning of the current track on the iPod® will be played.

APS (Automatic Program Search) FF, APS REW button:

When the ⏫ or ⏬ button is pushed for more than 1.5 seconds while the iPod® is playing, numbers of tracks can be skipped through.

When the ⏫ or ⏬ button is pushed for less than 1.5 seconds while iPod® is playing, the next track or the beginning of the current track on the iPod® will be played.

SCAN RPT REPEAT (RPT), RANDOM (RDM):

When the RPT button is pushed while a track is being played, the play pattern can be changed as follows:

Except Podcast and Audiobook:

→ ALL REPEAT → TRACK REPEAT → ALL RANDOM → ALBUM RANDOM →

Podcast:

ALL REPEAT ↔ TRACK REPEAT

Audiobook:

→ NORMAL → FAST → SLOW →

AUX (Auxiliary) input

AUX IN jack:

The AUX IN jack is located on the audio unit. The AUX IN audio input jack accepts any standard analog audio input such as from a portable cassette tape/CD player, MP3 player or laptop computer.

AUX AUX (Auxiliary) button:

With an AUX device plugged in, push the AUX button repeatedly until the display changes to the AUX mode.

When the AUX button is pushed with no device plugged into the jack, the audio system does not change to the AUX mode.

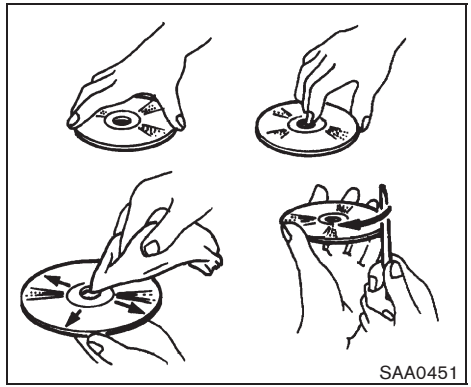

CD CARE AND CLEANING

- Handle a CD by its edges. Never touch the surface of the disc. Do not bend the disc.
- Always place the discs in the storage case when they are not being used.
- To clean a disc, wipe the surface from the center to the outer edge using a clean, soft cloth. Do not wipe the disc using a circular motion.

  Do not use a conventional record cleaner or alcohol intended for industrial use.
- A new disc may be rough on the inner and outer edges. Remove the rough edges by

rubbing the inner and outer edges with the side of a pen or pencil as illustrated.

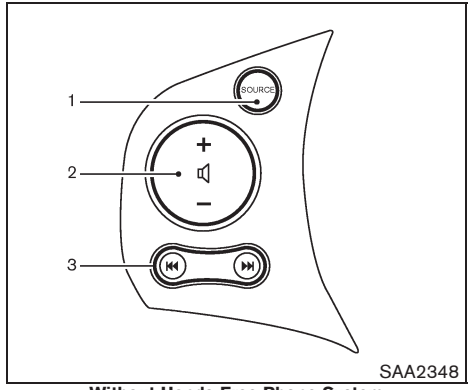

Without Hands-Free Phone System

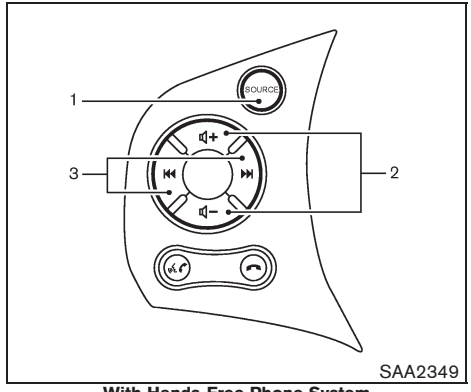

With Hands-Free Phone System

1. SOURCE select switch
2. VOLUME control switch
3. Tuning switch

STEERING WHEEL SWITCH FOR AUDIO CONTROL (if so equipped)

The audio system can be operated using the controls on the steering wheel.

SOURCE select switch

With the ignition switch placed in the ACC or ON position, push the SOURCE select switch to turn the audio system on.

Push the SOURCE select switch to change the mode.

AM, FM, CD, AUX, iPod® (if so equipped) and SAT (if so equipped)

If no CD is loaded or AUX and/or iPod® are not connected, the CD, AUX and/or iPod® modes will be skipped.

VOLUME control switch

Push up or down the VOLUME control switch to increase or decrease the volume.

⏮ ⏭ Tuning switch

Memory change (radio):

Push the tuning switch for less than 1.5 seconds to change the next or previous radio preset.

SEEK tuning (radio):

Push the tuning switch for more than 1.5 seconds to seek the next or previous radio station.

APS (Automatic Program Search) FF, APS REW (CD and iPod®):

Push the tuning switch for less than 1.5 seconds to return to the beginning of the present program or skip to the next program. Push several times to skip back or skip through programs.

This system searches for the blank intervals between selections. If there is a blank interval within one program or there is no interval between programs, the system may not stop in the desired or expected location.

FOLDER change (CD with MP3 or WMA):

Push the tuning switch for more than 1.5 seconds to change the folders (if there are any folders).

ANTENNA

CAUTION

- **To avoid damaging or deforming the antenna, be sure to fold down (if so equipped) or remove the antenna under the following conditions.**
  - **— The vehicle enters a garage with a low ceiling.**
  - **— The vehicle is covered with a car cover.**
- **Be sure that antenna is removed before the vehicle enters an automatic car wash.**
- **Always properly tighten the antenna rod during installation. Otherwise, the antenna rod may break during vehicle operation.**

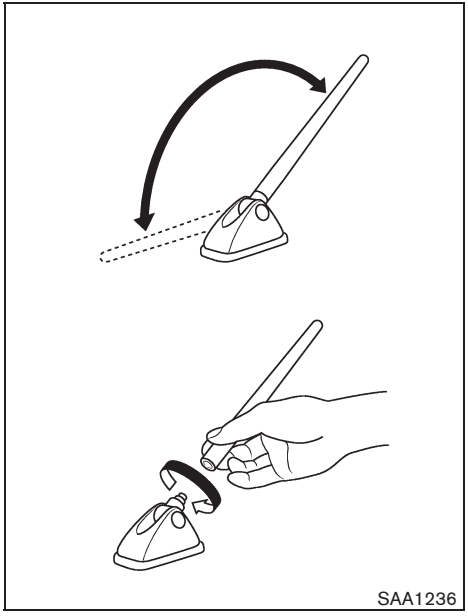

For FM-AM radio

- Adjust the angle of the antenna for the best reception.
- To remove the antenna, hold the bottom of the antenna and turn it counterclockwise.
- To install the antenna, turn the antenna clockwise and tighten.

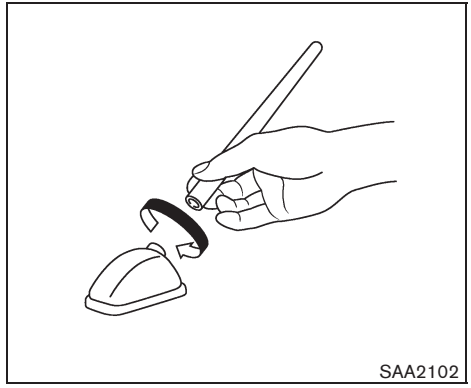

For FM-AM-SAT radio

- To remove the antenna, hold the bottom of the antenna and turn it counterclockwise.
- To install the antenna, turn the antenna clockwise and tighten.

CAR PHONE OR CB RADIO

When installing a car phone or a CB radio in your NISSAN, be sure to observe the following precautions, otherwise the new equipment may adversely affect the electronic control modules and electronic control system harness.

WARNING

- **A cellular telephone should not be used while driving so full attention may be given to vehicle operation. Some jurisdictions prohibit the use of cellular telephones while driving.**
- **If you must make a call while your vehicle is in motion, the hands-free cellular phone operational mode (if so equipped) is highly recommended. Exercise extreme caution at all times so full attention may be given to vehicle operation.**
- **If a conversation in a moving vehicle requires you to take notes, pull off the road to a safe location and stop your vehicle before doing so.**

CAUTION

- **Keep the antenna as far away as possible from the electronic control modules.**
- **Keep the antenna wire more than 8 in (20 cm) away from the electronic control system harness. Do not route the antenna wire next to any harness.**
- **Adjust the antenna standing-wave ratio as recommended by the manufacturer.**
- **Connect the ground wire from the CB radio chassis to the body.**
- **For details, consult a NISSAN dealer.**

BLUETOOTH® HANDS-FREE PHONE SYSTEM WITH NISSAN VOICE RECOGNITION (if so equipped)

WARNING

- **Use a phone after stopping your vehicle in a safe location. If you have to use a phone while driving, exercise extreme caution at all times so full attention may be given to vehicle operation.**
- **If you find yourself unable to devote full attention to vehicle operation while talking on the phone, pull off the road to a safe location and stop your vehicle before doing so.**

CAUTION

To avoid discharging the vehicle battery, use a phone after starting the engine.

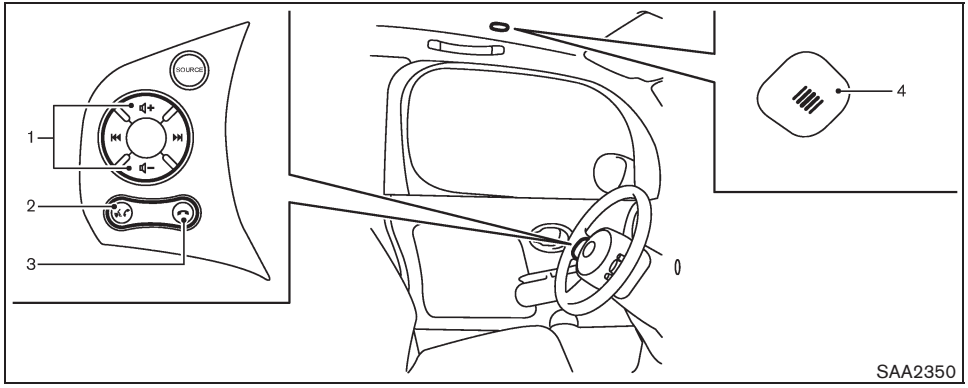

1. Volume control switch −/+
2. PHONE SEND button
3. PHONE END button
4. Microphone

Your NISSAN is equipped with the Bluetooth® Hands-Free Phone System. If you are an owner of a compatible Bluetooth® enabled cellular phone, you can set up the wireless connection between your cellular phone and the in-vehicle phone module. With Bluetooth® wireless technology, you can make or receive a hands-free telephone call with your cellular phone in the vehicle.

Once your cellular phone is paired to the in-vehicle phone module, no other phone connecting procedure is required. Your phone is automatically connected with the in-vehicle phone module when the ignition switch is placed in the ON position with the registered cellular phone turned on and carried in the vehicle.

You can register up to 5 different Bluetooth® cellular phones to the in-vehicle phone module. However, you can talk on only one cellular phone at a time.

Before using the Bluetooth® Hands-Free Phone System, refer to the following notes.

- Set up the wireless connection between a compatible cellular phone and the in-vehicle phone module before using the Bluetooth® Hands-Free Phone System.
- Some Bluetooth® enabled cellular phones may not be recognized by the in-vehicle phone module. Please visit www.nissanusa.com/bluetooth for a recommended phone list.
- You will not be able to use a hands-free phone under the following conditions:
  - Your vehicle is outside of the cellular service area.
  - Your vehicle is in an area where it is difficult to receive a cellular signal; such as in a tunnel, in an underground parking garage, near a tall building or in a mountainous area.
  - Your cellular phone is locked to prevent it from being dialed.
- When the radio wave condition is not ideal or ambient sound is too loud, it may be difficult to hear the other person's voice during a call.
- Immediately after the ignition switch is placed in the ON position, it may be impossible to receive a call for a short period of time.
- Do not place the cellular phone in an area

surrounded by metal or far away from the in-vehicle phone module to prevent tone quality degradation and wireless connection disruption.

- While a cellular phone is connected through the Bluetooth® wireless connection, the battery power of the cellular phone may discharge quicker than usual.
- If the Bluetooth® Hands-Free Phone System seems to be malfunctioning, please refer to "Troubleshooting guide" later in this section. You can also visit www.nissanusa.com/bluetooth for troubleshooting help.
- Some cellular phones or other devices may cause interference or a buzzing noise to come from the audio system speakers. Storing the device in a different location may reduce or eliminate the noise.
- Refer to the cellular phone Owner's Manual regarding the telephone charges, cellular phone antenna and body, etc.

This device complies with Part 15 of the FCC Rules. Operation is subject to the following two conditions: (1) this device may not cause harmful interference, and (2) this device must accept any interference received, including interference that may cause undesired operation.

FCC Radiation Exposure Statement:

This equipment complies with FCC radiation exposure limits set forth for an uncontrolled environment. This equipment should be installed and operated with minimum distance 8 in (20 cm) between the radiator and your body. This Transmitter must not be co-located or operating in conjunction with any other antenna or transmitter.

USING SYSTEM

The NISSAN Voice Recognition system allows hands-free operation of the Bluetooth® Hands-Free Phone System.

If the vehicle is in motion, some commands may not be available so full attention may be given to vehicle operation.

Initialization

When the ignition switch is placed in the ON position, NISSAN Voice Recognition is initialized, which takes a few seconds. If the button is pushed before the initialization completes, the system will announce "Hands-free phone system not ready" and will not react to voice commands.

Operating tips

To get the best performance out of the NISSAN Voice Recognition system, observe the following:

- Wait until the tone sounds before speaking a command. Otherwise, the command will not be received properly.
- Start speaking a command within 5 seconds after the tone sounds.
- Speak in a natural voice without pausing between words.

Giving voice commands

To operate NISSAN Voice Recognition, push and release the button located on the steering wheel. After the tone sounds, speak a command.

The command given is picked up by the microphone, and voice feedback is given when the command is accepted.

- If you need to hear the available commands for the current menu again, say "Help" and the system will repeat them.
- If a command is not recognized, the system announces, "Command not recognized. Please try again." Repeat the command in a clear voice.
- If you want to go back to the previous command, you can say "Go back" or "Correction" anytime the system is waiting for a response.
- You can cancel a command when the

system is waiting for a response by saying, “Cancel” or “Quit.” The system announces “Cancel” and ends the voice recognition (VR) session. You can also push the button on the steering wheel at any time to end the VR session. Whenever the VR session is canceled, a double beep sounds to indicate you have exited the system.

- If you want to adjust the volume of the voice feedback, push the volume control switches (+ or −) on the steering wheel while being provided with feedback. You can also use the radio volume control knob.

How to say numbers:

NISSAN Voice Recognition requires a certain way to speak numbers in voice commands. Refer to the following rules and examples:

- Either “zero” or “oh” can be used for “0”.

  Example: 1-800-662-6200

  —“One eight oh oh six six two six two oh oh”, or

  —“One eight zero zero six six two six two oh oh”

- Words can be used for the first 4 digits places only.

  Example: 1-800-662-6200

  —“One eight hundred six six two six two oh oh”,

  —NOT “One eight hundred six six two sixty two hundred, and

  —NOT “One eight oh oh six six two sixty two hundred.

- Numbers can be spoken in small groups. The system will prompt you to continue entering digits, if desired.

  Example: 1-800-662-6200

  —“One eight oh oh”

  The system repeats the numbers and prompts you to enter more.

  —“six six two”

  The system repeats the numbers and prompts you to enter more.

  —“six two oh oh”

- You can say “Star” for * and “Pound” for # at anytime in any position of the phone number. (Available only when using “Call International” command.)

  Example: 1-555-1212 *123

  —“One five five five one two one two star one two three”

- Say “plus” for “+” (available only when using the “Call International” command).

- Say “pause” for a 2 second pause (available only when storing a phone book number).

  See “Making a call by entering a phone number” later in this section and “Call” later in this section for more information.

NOTE:

For best results, say phone numbers as single digits.

The voice command “Help” is available at any time. Please say the “Help” command to get information about how to use the system.

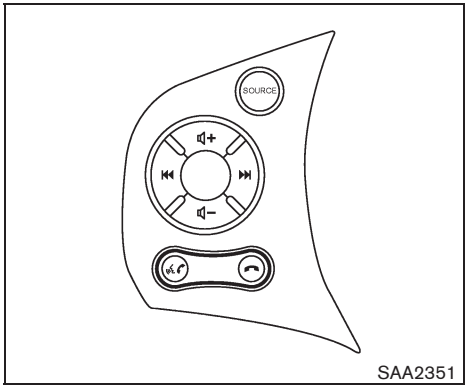

TALK/PHONE SEND button

PHONE END button

Control buttons

The control buttons for the Bluetooth® Hands-Free Phone System are located on the steering wheel.

TALK/PHONE SEND

Push the button to initiate a VR session or answer an incoming call.

You can also use the button to skip through system feedback and to enter commands during a call. (See "List of voice commands" later in this section and "During a call" later in this section for more information.)

PHONE END

Push the button to cancel a VR session or end a call.

Getting started

The following procedures will help you get started using the Bluetooth® Hands-Free Phone System with NISSAN Voice Recognition. For additional command options, see "List of voice commands" later in this section.

Choosing a language

You can interact with the Bluetooth® Hands-Free Phone System using English, Spanish or French.

To change the language, perform the following.

1. Push and hold the button for more than 5 seconds.
2. The system announces: "Press the PHONE SEND () button for the hands-free phone system to enter the speaker adaptation mode or press the PHONE END () button to select a different language."
3. Press the button.

   For information on speaker adaptation, see "SPEAKER ADAPTATION (SA) MODE" later in this section.
4. The system announces the current language and gives you the option to change the language to Spanish (in Spanish) or French (in French). Use the following chart to select the language.

   NOTE:
   You must push the button or the button within 5 seconds to change the language.

Current language	Press (TALK/PHONE SEND) to select	Press (PHONE END) to select
English	Spanish	French
Spanish	English	French
French	English	Spanish

5. If you decide not to change the language, do not push either button. After 5 seconds, the VR session will end, and the language will not be changed.

Pairing procedure

NOTE:

The pairing procedure must be performed when the vehicle is stationary. If the vehicle starts moving during the procedure, the procedure will be cancelled.

Main menu
"Setup" Ⓐ
"Pair Phone" Ⓑ
"New Phone" Ⓒ
Initiate from handset Ⓓ
Name phone Ⓔ
Assign priority Ⓕ
Choose ringtone Ⓖ

1. Push the button on the steering wheel. The system announces the available commands.
2. Say: "Setup" Ⓐ. The system acknowledges the command and announces the next set of available commands.
3. Say: "Pair phone" Ⓑ. The system acknowledges the command and announces the next set of available commands.
4. Say: "New phone" Ⓒ. The system acknowledges the command and asks you to initiate pairing from the phone handset Ⓓ.

   When you are asked to enter a PIN code for pairing your Bluetooth® cellular phone, operate it to enter the code "1234". The code is always "1234" regardless of the number of phones paired.

   The pairing procedure of the cellular phone varies according to each cellular phone. See the cellular phone Owner's Manual for details. You can also visit www.nissanusa.com/bluetooth for instructions on pairing NISSAN recommended cellular phones.
5. The system asks you to say a name for the phone Ⓔ.

   If the name is too long or too short, the system tells you, then prompts you for a name again.

   Also, if more than one phone is paired and the name sounds too much like a name already used, the system tells you, then prompts you for a name again.
6. The system asks you to assign a priority level Ⓕ. The priority level determines which phone is active when more than one paired Bluetooth® phone is in the vehicle. Follow the instructions provided by the system or see "Setup" later in this section for more information on changing priorities.
7. The system will ask if you would like to select a custom ringtone Ⓖ. Follow the instructions provided by the system or see "Setup" later in this section for more information on selecting ringtones.

Making a call by entering a phone number

Main menu
"Call" Ⓐ or "Call International" Ⓑ
Number (speak digits) Ⓒ
"Dial" Ⓓ

1. Push the button on steering wheel. A tone will sound.
2. Say: "Call" Ⓐ. The system acknowledges the command and announces the next set of available commands.

   Say: "Call International" Ⓑ to dial more than 10 digits or any special characters.
3. Say the number you wish to call Ⓒ. For example, 555-1212 can be said as "five five five one two one two." (See "How to say numbers" earlier in this section for more information.)
4. When you have finished speaking the phone number, the system repeats it back and announces the available commands.
5. Say: "Dial" Ⓓ. The system acknowledges the command and makes the call.

For additional command options, see "List of voice commands" later in this section.

Receiving a call

When you hear the ringtone, push the button on the steering wheel.

Once the call has ended, push the button on the steering wheel.

NOTE:

If you do not wish to take the call when you hear the ringtone, push the button on the steering wheel to reject the call.

For additional command options, see “List of voice commands” later in this section.

List of voice commands

Main menu
“Call” or “Call International”
“Phone Book”
“Memo Pad”
“Setup”

When you push and release the button on the steering wheel, you can choose from the commands on the Main Menu. The following pages describe these commands and the commands in each sub-menu.

Remember to wait for the tone before speaking.

You can say “Help” to hear the list of commands currently available anytime the system is waiting for a response.

If you want to end an action without completing it, you can say “Cancel” or “Quit” at anytime the system is waiting for a response. The system will end the VR session. Whenever the VR session is canceled, a double beep is played to indicate you have exited the system.

If you want to go back to the previous command, you can say “Go back” or “Correction” anytime the system is waiting for a response.

When you get used to the menus in the system, you can talk ahead by saying more than one command at a time. For example, say, “Call five five five one two one two” or “Memo pad record.”

Also, when you get used to the system responses, you can skip ahead to the tone by pressing the button on the steering wheel. However, if you press the button when the system is waiting for a response from you it will end the VR session.

Call

Main menu		
	“Call” or “Call International”	
		Name (speak name) Ⓐ
		Number (speak digits) Ⓑ
		“Redial” Ⓒ
		“Call Back” Ⓓ

<Name> (speak name) Ⓐ

If you have stored entries in the phone book, you can dial a number associated with a name and location.

See “Phone book” later in this section to learn how to store entries.

When prompted by the system, say the name of the phone book entry you wish to call. The system acknowledges the name.

If there are multiple locations associated with the name, the system asks you to choose the location.

Once you have confirmed the name and location, the system begins the call.

<Number> (speak digits) Ⓑ

When prompted by the system, say the number you wish to call. (See “How to say numbers” earlier in this section and “Making a call by

entering a phone number" earlier in this section for more details.)

"Redial" Ⓒ

Use the Redial command to call the last number that was dialed within the vehicle.

NOTE:

The system will not redial the last number dialed by the handset keypad.

If a redial number does not exist, the system announces, "There is no number to redial" and ends the VR session.

"Call Back" Ⓓ

Use the Call Back command to dial the number of the last incoming call within the vehicle.

The system acknowledges the command, repeats the number and begins dialing.

If a call back number does not exist, the system announces, "There is no number to call back" and ends the VR session.

International

When you would like to enter a phone number other than in 3-3-4 digit format, say "international". When the system acknowledges this command, the system will prompt you to speak the number you wish to enter.

During a call

During a call there are several command options available. Push the button on the steering wheel to mute the receiving voice and enter commands.

- "Help" — The system announces the available commands.
- "Go back/Correction" — The system announces "Go back," ends the VR session and returns to the call.
- "Cancel/Quit" — The system announces "Cancel," ends the VR session and returns to the call.
- "Send/Enter/Call/Dial" — Use the Send command to enter numbers during a call. For example, if you were directed to dial an extension by an automated system:

  Say: "Send one two three four."

  The system acknowledges the command and sends the tones associated with the numbers. The system then ends the VR session and returns to the call.
- "Transfer Call" — Use the Transfer Call command to transfer the call from the Bluetooth® Hands-Free Phone System to the cellular phone when privacy is desired.

  The system announces, "Transfer call. Call transferred to privacy mode." The system then ends the VR session.

  You can also issue the Transfer Call command again to return to a hands-free call through the vehicle.
- "Mute" — Use the Mute command to mute your voice so the other party cannot hear it. Use the mute command again to unmute your voice.

NOTE:

If the other party ends the call or the cellular phone network connection is lost while the Mute feature is on, the Mute feature may need to be reset to "off."

Phone book

Main menu
- "Phone Book"
  - "New Entry" Ⓐ
  - "Edit" Ⓑ
  - "Delete" Ⓒ
  - "List Names" Ⓓ

The phone book stores up to 40 names for each phone paired with the system. Each name can have up to 4 locations/phone numbers associated with it.

NOTE:

Each phone has its own separate phone book. You cannot access Phone A's phone book if you are currently connected with Phone B.

"New Entry" Ⓐ

Use the New Entry command to store a new name in the system.

When prompted by the system, say the name you would like to give the new entry.

For example, say: "Mary."

If the name is too long or too short, the system tells you, then prompts you for a name again.

Also, if the name sounds too much like a name already stored, the system tells you, then prompts you for a name again.

Once the system accepts the name and you confirm it is correct, the system asks for a location (Home, Office, Mobile or Other).

For example, say: "Home."

The system acknowledges the location.

The system will ask you to say a phone number or to transfer a phone number stored in the cellular phone's memory.

To enter a phone number by voice command:

For example, say: "five five five one two one two." (See "How to say numbers" earlier in this section for more information.)

To transfer a phone number stored in the cellular phone's memory (if so equipped):

Say "Transfer entry." The system acknowledges the command and asks you to initiate the transfer from the phone handset. The new contact phone number will be transferred from the cellular phone via the Bluetooth® communication link.

The transfer procedure varies according to each cellular phone. See the cellular phone Owner's Manual for details. You can also visit www.nissanusa.com/bluetooth for instructions on transferring phone numbers from NISSAN recommended cellular phones.

The system repeats the number and prompts you for the next command. When you have finished entering numbers, choose "Store."

The system confirms the name, location and number. The system then asks if you would like to store another location for the same name. If you do not wish to store another location, the system ends the VR session.

"Edit" Ⓑ

Use the Edit command to alter an existing phone book entry or to add a 2nd, 3rd or 4th phone number to an existing entry.

When prompted by the system, say the name of the entry you wish to edit.

The system acknowledges the name and asks you for the location you would like to edit.

Say the name of the location. The system acknowledges the location.

The system will ask you to say a phone number or to transfer a phone number stored in the cellular phone's memory.

To enter a phone number by voice command:

For example, say: "five five five one two one two." (See "How to say numbers" earlier in this section for more information.)

To transfer a phone number stored in the cellular phone's memory (if so equipped):

Say "Transfer entry." The system acknowledges the command and asks you to initiate the transfer from the phone handset. The new contact phone number will be transferred from the cellular phone via the Bluetooth® communication link.

The transfer procedure varies according to each cellular phone. See the cellular phone Owner's Manual for details. You can also visit www.nissanusa.com/bluetooth for instructions on transferring phone numbers from NISSAN re-

commended cellular phones.

The system repeats the number and prompts you for the next command. When you have finished entering numbers, choose “Store.”

The system confirms the name, location and number, then announces that the entry has been stored. The system then ends the VR session.

“Delete” Ⓒ

Use the Delete command to erase one entry from the phone book, all entries from the phone book, the current redial number or the current call back number.

To delete entries from the phone book, say a name or “All entries” when prompted by the system.

The system acknowledges the command and asks you to confirm the deletion.

To delete the current redial number or call back number, say “redial number” or “call back number” when prompted by the system.

If a redial number or a call back number exists, the system deletes them without asking for confirmation.

If there is no number for the entry you are trying to delete, the system says so and ends the VR session.

“List Names” Ⓓ

Use the List Names command to hear all the names and locations in the phone book.

The system recites the phone book entries but does not include the actual phone numbers. When the playback of the list is complete the system returns to the main menu.

You can stop the playback of the list at any time by pushing the button on the steering wheel. The system ends the VR session.

Memo pad

Main menu
- “Memo Pad”
  - “Play” Ⓐ
  - “Record” Ⓑ
  - “Delete” Ⓒ

The Memo Pad records a maximum of 6 voice memos, each up to 20 seconds long.

“Play” Ⓐ

The system plays back all the memos in the order of newest to oldest. The system ends the VR session.

If there are no memos recorded, the system announces “No messages to play.” The system ends the VR session.

“Record” Ⓑ

The system announces “Recording” and a tone sounds signaling you to begin.

Speak the information you wish to record clearly. When you are done, push the or button on the steering wheel.

A tone sounds and the system announces “Memo recorded.” Another tone sounds to end the VR session.

If the memo pad is full, the system asks if you wish to record over the oldest memo.

“Delete” Ⓒ

The Delete command erases all memos. The system asks you to confirm this action before deleting all memos.

Setup

Main menu
- "Setup"
  - "Pair Phone" (A)
  - "List Phones" (B)
  - "Select Phone" (C)
  - "Change Priority" (D)
  - "Delete Phone" (E)
  - "Select Ringtone" (F)
  - "Bluetooth Off" (G)

Use the Setup command to change options associated with the Bluetooth® Hands-Free Phone System.

"Pair Phone" (A)

Use the Pair Phone command to pair a phone to the Bluetooth® Hands-Free Phone System.

When you are asked to enter a PIN code for pairing your Bluetooth® cellular phone, operate it to enter the code "1234". The code is always "1234" regardless of the number of phones paired.

NOTE:

The pairing procedure must be performed when the vehicle is stationary. If the vehicle starts moving during the procedure, the procedure will be cancelled. Also, see "Pairing procedure" earlier in this section for additional information.

Up to 5 phones can be paired. If you try to pair a sixth phone, the system announces that you must first delete one phone or replace an existing phone.

If you try to pair a phone that has already been paired to your vehicle's system, the system announces the name the phone is already using. The pairing procedure will then be canceled.

When prompted by the system, choose from the following commands:

- "New phone" — see "Pairing procedure" earlier in this section.
- "Replace phone" — The system announces the names of the phones already paired and asks which you would like to replace.

  Once you say the name of the phone you wish to replace, the paring procedure will begin. (See "Pairing procedure" earlier in this section.)
- "List phone" — See the description below.

"List Phones" (B)

Use the List Phones command to hear the names of the phones currently paired. If no phones are paired, the system announces, "No paired phones to list." The system then ends the VR session.

"Select Phone" (C)

Use the Select Phone command to select a phone of lesser priority when two or more phones paired with Bluetooth® Hands-Free Phone System are in the vehicle at the same time.

The system asks you to name the phone and confirm the selection.

Once the selection is confirmed, the selected phone remains active until the ignition switch is placed in the off position or you select a new phone.

"Change Priority" (D)

Use the Change Priority command to change the priority level of the active phone.

The priority level determines which phone is active when more than one paired Bluetooth® phone is in the vehicle.

The system states the priority level of the active phone and asks for a new priority level (1, 2, 3, 4, 5).

If the new priority level is already being used for another phone, the two phones will swap priority levels.

For example, if the current priority levels are:

Priority Level 1 = Phone A
Priority Level 2 = Phone B
Priority Level 3 = Phone C

and you change the priority level of Phone C to Level 1, then:

Priority Level 1 = Phone C
Priority Level 2 = Phone B
Priority Level 3 = Phone A

“Delete Phone” Ⓔ

Use the Delete Phone command to delete a specific phone or all phones from the Bluetooth® Hands-Free Phone System.

The system announces the names of the phones already paired with the system and their priority level. The system then gives you the option to delete a specific phone, all phones or listen to the list again.

Once you chose to delete a phone or all phones, the system asks you to confirm this action.

NOTE:

When you delete a phone, the associated phone book for that phone will also be deleted.

“Select Ringtone” Ⓕ

Use the Select Ringtone command to select the tone heard in the vehicle when an incoming call is received.

The system announces the name of the active phone and asks you to choose from the following commands:

- “Ringtone” — The system plays a ringtone and asks if you would like to select that tone. If you say no, the system plays the next ringtone available and continues to cycle through the ringtones until you select one or quit.
- “Silent” — The system asks you to confirm your wish to disable the ringtone.

“Bluetooth Off” Ⓖ

Use the Bluetooth® Off command to turn off the Bluetooth Hands-Free Phone System.

When Bluetooth® Hands-Free Phone System is off, you will not be able to make or receive calls using NISSAN Voice Recognition. Also, you will not have access to the Phone Book.

You can still use the Memo Pad and access Setup.

SPEAKER ADAPTATION (SA) MODE

Speaker Adaptation allows up to two out-of dialect users to train the system to improve recognition accuracy. By repeating a number of commands, the users can create a voice model of their own voice that is stored in the system. The system is capable of storing a different speaker adaptation model for memory A and memory B.

If memory A is available, the system will use memory A to store the model. If memory A is in use and memory B is available, the system will use memory B to store the model. If both of the memory locations are in use, the system will ask the user to select which memory location should be overwritten.

Training procedure

The procedure for training a voice is as follows.

1. Position the vehicle in a reasonably quiet outdoor location.
2. Sit in the driver’s seat with the engine running, the parking brake applied, and the transmission in P (Park) position.
3. Push and hold the button for more than 5 seconds.
4. The system announces: “Press the PHONE SEND ( ) button for the hands-free phone system to enter the speaker adaptation mode or press the PHONE END ( ) button to select a different language”.
5. Push the button.

   For information about selecting a different

language, see “Choosing a language” earlier in this section.

6. Voice memory A or memory B is selected automatically. If both memory locations are already in use, the system will prompt you to overwrite one. Follow the instructions provided by the system.
7. When preparation is complete and you are ready to begin, push the button.
8. The SA mode will be explained. Follow the instructions provided by the system.
9. When training is finished, the system will tell you an adequate number of phrases have been recorded.
10. The system will ask you to say your name. Follow the instructions to register your name.
11. The system will announce that speaker adaptation has been completed and the system is ready.

The SA mode will stop if:

- The button is pushed for more than 5 seconds in SA mode.
- The vehicle is driven during SA mode.
- The ignition switch is placed in the OFF or LOCK position.

Training phrases

During the SA mode, the system instructs you to say the following phrases. (The system will prompt you for each phrase.)

- phone book new entry
- dial three oh four two nine
- delete call back number
- setup pair phone
- memo pad play
- eight pause nine three two pause seven
- delete all entries
- call seven two four zero nine
- phone book delete entry
- memo pad record
- dial star two one seven oh
- Yes
- No
- select ringtone
- dial eight five six nine two
- Bluetooth on
- setup change priority
- call three one nine oh two
- nine seven pause pause three oh eight
- Cancel
- call back number
- call star two zero nine five
- delete phone
- dial eight three zero five one
- Home
- four three pause two nine pause zero
- delete redial number
- phone book list names
- call eight oh five four one
- Correction
- setup change ringtone
- dial seven four oh one eight
- setup main menu
- Delete
- dial nine seven two six six
- memo pad delete
- call seven six three oh one

- go back
- call five six two eight zero
- dial six six four three seven

TROUBLESHOOTING GUIDE

The system should respond correctly to all voice commands without difficulty. If problems are encountered, try the following solutions.

Where the solutions are listed by number, try each solution in turn, starting with number 1, until the problem is resolved.

Symptom	Solution
System fails to interpret the command correctly.	1. Ensure that the command format is valid. (See “List of voice commands” earlier in this section.)
	2. Ensure that the command is spoken after the tone.
	3. Speak clearly without pausing between words and at a level appropriate to the ambient noise level in the vehicle.
	4. Ensure that the ambient noise level is not excessive (for example, windows open or defroster on). NOTE: If it is too noisy to use the phone, it is likely that the voice commands will not be recognized.
	5. If more than one command was said at a time, try saying the commands separately.
	6. If the system consistently fails to recognize commands, the voice training procedure should be carried out to improve the recognition response for the speaker. (See “SPEAKER ADAPTATION (SA) MODE” earlier in this section.)
The system consistently selects the wrong entry from the phone book.	1. Ensure that the phone book entry name requested matches what was originally stored. This can be confirmed by using the “List Names” command. (See “Phone book” earlier in this section.)
	2. Replace one of the names being confused with a new name.

MEMO

5 Starting and driving

Precautions when starting and driving 5-2
Exhaust gas (carbon monoxide) 5-2
Three-way catalyst..... 5-2
Tire Pressure Monitoring System (TPMS)..... 5-3
Avoiding collision and rollover 5-5
Off-road recovery..... 5-5
Rapid air pressure loss..... 5-6
Drinking alcohol/drugs and driving..... 5-6
Ignition switch
(models without Intelligent Key system) 5-7
Continuously Variable Transmission (CVT)..... 5-7
Manual Transmission (MT)..... 5-8
Steering lock..... 5-8
Key positions 5-8
Push-button ignition switch
(models with Intelligent Key system) 5-9
Operating range for engine start function..... 5-9
Push-button ignition switch operation..... 5-10
Push-button ignition switch positions..... 5-11
Intelligent Key battery discharge 5-11
Before starting the engine 5-12
Starting the engine 5-12
Models without Intelligent Key system 5-12
Models with Intelligent Key system 5-13
Driving the vehicle 5-14
Continuously Variable Transmission (CVT)..... 5-14
Manual Transmission (MT)..... 5-18
Parking brake 5-20
Cruise control (if so equipped)..... 5-21
Precautions on cruise control..... 5-21
Cruise control operations 5-21
Break-in schedule 5-23
Increasing fuel economy 5-23
Sonar system (if so equipped)..... 5-24
Parking/parking on hills..... 5-25
Electric power steering system..... 5-26
Brake system 5-27
Braking precautions..... 5-27
Anti-lock Braking System (ABS) 5-28
Vehicle Dynamic Control (VDC) system..... 5-29
Cold weather driving..... 5-30
Freeing a frozen door lock..... 5-30
Anti-freeze..... 5-30
Battery 5-30
Draining of coolant water 5-30
Tire equipment 5-31
Special winter equipment..... 5-31
Driving on snow or ice 5-31
Engine block heater (if so equipped)..... 5-31

WARNING

- **Do not leave children or adults who would normally require the support of others alone in your vehicle. Pets should not be left alone either. They could accidentally injure themselves or others through inadvertent operation of the vehicle. Also, on hot, sunny days, temperatures in a closed vehicle could quickly become high enough to cause severe or possibly fatal injuries to people or animals.**
- **Properly secure all cargo with ropes or straps to help prevent it from sliding or shifting. Do not place cargo higher than the seatbacks. In a sudden stop or collision, unsecured cargo could cause personal injury.**

EXHAUST GAS (carbon monoxide)

WARNING

- **Do not breathe exhaust gases; they contain colorless and odorless carbon monoxide. Carbon monoxide is dangerous. It can cause unconsciousness or death.**
- **If you suspect that exhaust fumes are entering the vehicle, drive with all windows fully open, and have the vehicle inspected immediately.**
- **Do not run the engine in closed spaces such as a garage.**
- **Do not park the vehicle with the engine running for any extended length of time.**
- **Keep the back door closed while driving, otherwise exhaust gases could be drawn into the passenger compartment. If you must drive with the back door open, follow these precautions:**

  1. Open all the windows.

  2. Set the air recirculation to off and the fan control to high to circulate the air.
- **If electrical wiring or other cable connections must pass to a trailer through the seal on the back door or the body, follow the manufacturer's recommendation to prevent carbon monoxide entry into the vehicle.**
- **If a special body, camper or other equipment is added for recreational or other usage, follow the manufacturer's recommendation to prevent carbon monoxide entry into the vehicle. (Some recreational vehicle appliances such as stoves, refrigerators, heaters, etc. may also generate carbon monoxide.)**
- **The exhaust system and body should be inspected by a qualified mechanic whenever:**
  - **— The vehicle is raised for service.**
  - **— You suspect that exhaust fumes are entering into the passenger compartment.**
  - **— You notice a change in the sound of the exhaust system.**
  - **— You have had an accident involving damage to the exhaust system, underbody, or rear of the vehicle.**

THREE-WAY CATALYST

The three-way catalyst is an emission control device installed in the exhaust system. Exhaust gases in the three-way catalyst are burned at high temperatures to help reduce pollutants.

WARNING

- **The exhaust gas and the exhaust system are very hot. Keep people, animals or flammable materials away from the exhaust system components.**
- **Do not stop or park the vehicle over flammable materials such as dry grass, waste paper or rags. They may ignite and cause a fire.**

CAUTION

- **Do not use leaded gasoline. Deposits from leaded gasoline will seriously reduce the three-way catalyst's ability to help reduce exhaust pollutants.**
- **Keep your engine tuned up. Malfunctions in the ignition, fuel injection, or electrical systems can cause overrich fuel flow into the three-way catalyst, causing it to overheat. Do not keep driving if the engine misfires, or if noticeable loss of performance or other unusual operating conditions are detected. Have the vehicle inspected promptly by a NISSAN dealer.**
- **Avoid driving with an extremely low fuel level. Running out of fuel could cause the engine to misfire, damaging the three-way catalyst.**
- **Do not race the engine while warming it up.**
- **Do not push or tow your vehicle to start the engine.**

TIRE PRESSURE MONITORING SYSTEM (TPMS)

Each tire, including the spare (if provided), should be checked monthly when cold and inflated to the inflation pressure recommended by the vehicle manufacturer on the vehicle placard or tire inflation pressure label. (If your vehicle has tires of a different size than the size indicated on the vehicle placard or tire inflation pressure label, you should determine the proper tire inflation pressure for those tires.)

As an added safety feature, your vehicle has been equipped with a Tire Pressure Monitoring System (TPMS) that illuminates a low tire pressure telltale when one or more of your tires is significantly under-inflated. Accordingly, when the low tire pressure telltale illuminates, you should stop and check your tires as soon as possible, and inflate them to the proper pressure. Driving on a significantly under-inflated tire causes the tire to overheat and can lead to tire failure. Under-inflation also reduces fuel efficiency and tire tread life, and may affect the vehicle's handling and stopping ability.

Please note that the TPMS is not a substitute for proper tire maintenance, and it is the driver's responsibility to maintain correct tire pressure, even if under-inflation has not reached the level to trigger illumination of the TPMS low tire pressure telltale.

Your vehicle has also been equipped with a TPMS malfunction indicator to indicate when the system is not operating properly. The TPMS malfunction indicator is combined with the low tire pressure telltale. When the system detects a malfunction, the telltale will flash for approximately one minute and then remain continuously illuminated. This sequence will continue upon subsequent vehicle start-ups as long as the malfunction exists. When the malfunction indicator is illuminated, the system may not be able to detect or signal low tire pressure as intended. TPMS malfunctions may occur for a variety of reasons, including the installation of replacement or alternate tires or wheels on the vehicle that prevent the TPMS from functioning properly. Always check the TPMS malfunction telltale after replacing one or more tires or wheels on your vehicle to ensure that the replacement or

alternate tires and wheels allow the TPMS to continue to function properly.

Additional information

- The TPMS does not monitor the tire pressure of the spare tire.
- The TPMS will activate only when the vehicle is driven at speeds above 16 MPH (25 km/h). Also, this system may not detect a sudden drop in tire pressure (for example a flat tire while driving).
- The low tire pressure warning light does not automatically turn off when the tire pressure is adjusted. After the tire is inflated to the recommended pressure, the vehicle must be driven at speeds above 16 MPH (25 km/h) to activate the TPMS and turn off the low tire pressure warning light. Use a tire pressure gauge to check the tire pressure.
- Tire pressure rises and falls depending on the heat caused by the vehicle's operation and the outside temperature. Low outside temperature can lower the temperature of the air inside the tire which can cause a lower tire inflation pressure. This may cause the low tire pressure warning light to illuminate. If the warning light illuminates in low ambient temperature, check the tire pressure for all four tires.

For additional information, see "Low tire pressure warning light" in the "2. Instruments and controls" section and "TIRE PRESSURE MONITORING SYSTEM (TPMS)" in the "6. In case of emergency" section.

WARNING

- **If the low tire pressure warning light illuminates while driving, avoid sudden steering maneuvers or abrupt braking, reduce vehicle speed, pull off the road to a safe location and stop the vehicle as soon as possible. Driving with under-inflated tires may permanently damage the tires and increase the likelihood of tire failure. Serious vehicle damage could occur and may lead to an accident and could result in serious personal injury. Check the tire pressure for all four tires. Adjust the tire pressure to the recommended COLD tire pressure shown on the Tire and Loading Information label to turn the low tire pressure warning light OFF. If you have a flat tire, replace it with a spare tire as soon as possible. (See "FLAT TIRE" in the "6. In case of emergency" section for changing a flat tire.)**
- **When a spare tire is mounted or a wheel is replaced, the TPMS will not function and the low tire pressure warning light will flash for approximately 1 minute. The light will remain on after 1 minute. Contact your NISSAN dealer as soon as possible for tire replacement and/or system resetting.**
- **Replacing tires with those not originally specified by NISSAN could affect the proper operation of the TPMS.**
- **Do not inject any tire liquid or aerosol tire sealant into the tires, as this may cause a malfunction of the tire pressure sensors.**

CAUTION

- **The TPMS may not function properly when the wheels are equipped with tire chains or the wheels are buried in snow.**
- **Do not place metalized film or any metal parts (antenna, etc.) on the windows. This may cause poor reception of the signals from the tire**

pressure sensors, and the TPMS will not function properly.

Some devices and transmitters may temporarily interfere with the operation of the TPMS and cause the low tire pressure warning light to illuminate. Some examples are:

- Facilities or electric devices using similar radio frequencies are near the vehicle.
- If a transmitter set to similar frequencies is being used in or near the vehicle.
- If a computer (or similar equipment) or a DC/AC converter is being used in or near the vehicle.

FCC Notice:

Changes or modifications not expressly approved by the party responsible for compliance could void the user's authority to operate the equipment.

This device complies with Part 15 of the FCC Rules and RSS-210 of Industry Canada.

Operation is subject to the following two conditions: (1) This device may not cause harmful interference, and (2) this device must accept any interference received, including interference that may cause undesired operation of the device.

AVOIDING COLLISION AND ROLLOVER

WARNING

Failure to operate this vehicle in a safe and prudent manner may result in loss of control or an accident.

Be alert and drive defensively at all times. Obey all traffic regulations. Avoid excessive speed, high speed cornering, or sudden steering maneuvers, because these driving practices could cause you to lose control of your vehicle. **As with any vehicle, a loss of control could result in a collision with other vehicles or objects, or cause the vehicle to rollover, particularly if the loss of control causes the vehicle to slide sideways.** Be attentive at all times, and avoid driving when tired. Never drive when under the influence of alcohol or drugs (including prescription or over-the-counter drugs which may cause drowsiness). Always wear your seat belt as outlined in the "SEAT BELTS" in the "1. Safety — Seats, seat belts and supplemental restraint system" section of this manual, and also instruct your passengers to do so.

Seat belts help reduce the risk of injury in collisions and rollovers. **In a rollover crash, an unbelted or improperly belted person is significantly more likely to be injured or killed than a person properly wearing a seat belt.**

OFF-ROAD RECOVERY

While driving, the right side or left side wheels may unintentionally leave the road surface. If this occurs, maintain control of the vehicle by following the procedure below. Please note that this procedure is only a general guide. The vehicle must be driven as appropriate based on the conditions of the vehicle, road and traffic.

1. Remain calm and do not overreact.
2. Do not apply the brakes.
3. Maintain a firm grip on the steering wheel with both hands and try to hold a straight course.
4. When appropriate, slowly release the accelerator pedal to gradually slow the vehicle.
5. If there is nothing in the way, steer the vehicle to follow the road while the vehicle speed is reduced. Do not attempt to drive the vehicle back onto the road surface until vehicle speed is reduced.
6. When it is safe to do so, gradually turn the steering wheel until both tires return to the road surface. When all tires are on the road surface, steer the vehicle to stay in the

appropriate driving lane.

- If you decide that it is not safe to return the vehicle to the road surface based on vehicle, road or traffic conditions, gradually slow the vehicle to a stop in a safe place off the road.

RAPID AIR PRESSURE LOSS

Rapid air pressure loss or a “blow-out” can occur if the tire is punctured or is damaged due to hitting a curb or pothole. Rapid air pressure loss can also be caused by driving on under-inflated tires.

Rapid air pressure loss can affect the handling and stability of the vehicle, especially at highway speeds.

Help prevent rapid air pressure loss by maintaining the correct air pressure and visually inspect the tires for wear and damage. See “WHEELS AND TIRES” in the “8. Maintenance and do-it-yourself” section of this manual.

If a tire rapidly loses air pressure or “blows-out” while driving maintain control of the vehicle by following the procedure below. Please note that this procedure is only a general guide. The vehicle must be driven as appropriate based on the conditions of the vehicle, road and traffic.

WARNING

The following actions can increase the chance of losing control of the vehicle if there is a sudden loss of tire air pressure. Losing control of the vehicle may cause a collision and result in personal injury.

- **The vehicle generally moves or pulls in the direction of the flat tire.**
- **Do not rapidly apply the brakes.**
- **Do not rapidly release the accelerator pedal.**
- **Do not rapidly turn the steering wheel.**

1. Remain calm and do not overreact.
2. Maintain a firm grip on the steering wheel with both hands and try to hold a straight course.
3. When appropriate, slowly release the accelerator pedal to gradually slow the vehicle.
4. Gradually steer the vehicle to a safe location off the road and away from traffic if possible.
5. Lightly apply the brake pedal to gradually stop the vehicle.
6. Turn on the hazard warning flashers and either contact a roadside emergency service to change the tire or see “CHANGING A FLAT TIRE” in the “6. In case of emergency” section of this Owner’s Manual.

DRINKING ALCOHOL/DRUGS AND DRIVING

WARNING

Never drive under the influence of alcohol or drugs. Alcohol in the bloodstream reduces coordination, delays reaction time and impairs judgement. Driving after drinking alcohol increases the likelihood of being involved in an accident injuring yourself and others. Additionally, if you are injured in an accident, alcohol can increase the severity of the injury.

NISSAN is committed to safe driving. However, you must choose not to drive under the influence of alcohol. Every year thousands of people are injured or killed in alcohol-related accidents. Although the local laws vary on what is considered to be legally intoxicated, the fact is that alcohol affects all people differently and most people underestimate the effects of alcohol.

IGNITION SWITCH (models without Intelligent Key system)

Remember, drinking and driving don't mix! And that is true for drugs, too (over-the-counter, prescription, and illegal drugs). Don't drive if your ability to operate your vehicle is impaired by alcohol, drugs, or some other physical condition.

WARNING

Never remove or turn the key to the LOCK position while driving. The steering wheel will lock. This may cause the driver to lose control of the vehicle and could result in serious vehicle damage or personal injury.

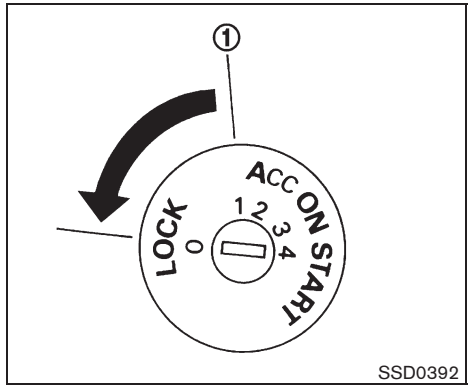

CONTINUOUSLY VARIABLE TRANSMISSION (CVT)

The ignition lock is designed so that the ignition switch cannot be turned to the LOCK position until the selector lever is moved to the P (Park) position.

- When turning the ignition switch to the LOCK position, make sure that the selector lever is in the P (Park) position.
- When removing the key from the ignition switch, make sure that the selector lever is in the P (Park) position.

When the ignition switch cannot be turned to the LOCK position:

1. Move the selector lever to the P (Park) position.
2. Turn the ignition switch slightly in the ON direction.
3. Turn the ignition switch to the LOCK position.
4. Remove the key.

If the ignition switch is turned to the LOCK position, the selector lever cannot be moved from the P (Park) position. The selector lever can be moved if the ignition switch is in the ON position with the foot brake pedal depressed.

There is an OFF position ① between the LOCK and ACC positions, although it is not marked on the ignition switch.

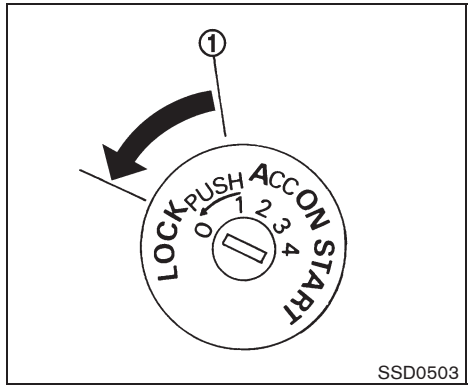

SSD0503

MANUAL TRANSMISSION (MT)

The ignition switch includes a device that helps prevent accidental removal of the key while driving.

The key can only be removed when the ignition switch is in the LOCK position.

To turn the ignition switch to the LOCK position from the ACC or ON position, turn the key to the OFF position, push the key in, then turn the key to the LOCK position.

There is an OFF position ① in between the LOCK and ACC positions. The OFF position is indicated by a “1” on the key cylinder.

STEERING LOCK

To lock steering wheel

1. Turn the ignition switch to the LOCK position.
2. Remove the key.
3. Turn the steering wheel 1/6 of a turn clockwise from the straight up position.

To unlock steering wheel

1. Insert the key into the ignition switch.
2. Gently turn the ignition switch while rotating the steering wheel slightly right and left.

KEY POSITIONS

LOCK (0)

The key can only be removed from the ignition switch at this position.

The steering lock can only be locked at this position.

OFF (1)

The engine is turned off with the steering wheel unlocked.

ACC (2)

The electrical accessory power activates without the engine turned on.

ON (3)

The ignition system and the electrical accessory power activate without the engine turned on.

START (4)

The engine starter activates and the engine will start. The ignition switch, when released, will automatically turn to the ON position.

CAUTION

As soon as the engine has started, release the ignition switch immediately.

WARNING

Do not operate the push-button ignition switch while driving the vehicle except in an emergency. (The engine will stop when the ignition switch is pushed 3 consecutive times or the ignition switch is pushed and held for more than 2 seconds.) If the engine stops while the vehicle is being driven, this could lead to a crash and serious injury.

Before operating the push-button ignition switch, be sure to move the selector lever to the P (Park) position.

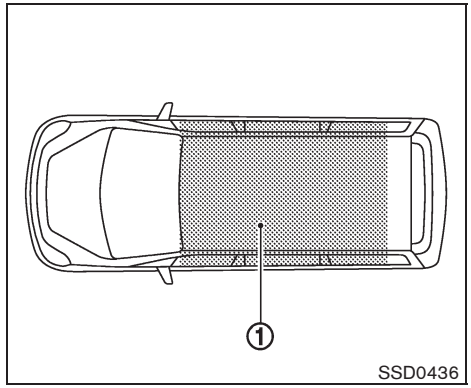

OPERATING RANGE FOR ENGINE START FUNCTION

The Intelligent Key can only be used for starting the engine when the Intelligent Key is within the specified operating range ①.

When the Intelligent Key battery is almost discharged or strong radio waves are present near the operating location, the Intelligent Key system's operating range becomes narrower and may not function properly.

If the Intelligent Key is within the operating range, it is possible for anyone, even someone who does not carry the Intelligent Key, to push the ignition switch to start the engine.

- The cargo room area is not included in the operating range but the Intelligent Key may function.
- If the Intelligent Key is placed on the instrument panel, inside the glove box or door pocket, the Intelligent Key may not function.
- If the Intelligent Key is placed near the door or window outside the vehicle, the Intelligent Key may function.

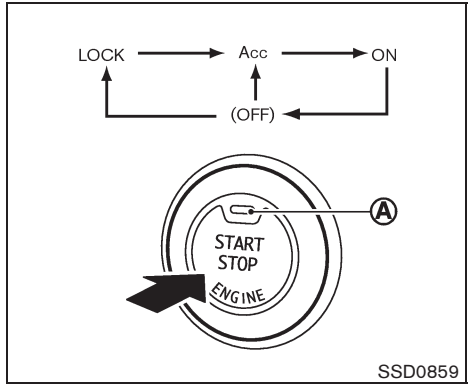

PUSH-BUTTON IGNITION SWITCH OPERATION

When the ignition switch is pushed without depressing the brake pedal, the ignition switch position will change as follows:

- Push center once to change to ACC.
- Push center two times to change to ON.
- Push center three times to change to OFF.
- Push center four times to return to ACC.
- Open or close any door to return to LOCK during the OFF position.

The indicator light Ⓐ on the ignition switch illuminates when the ignition switch is in the ACC or ON position.

The ignition switch is equipped with an anti-theft steering lock device.

In order for the steering wheel to be locked, it must be turned about 1/6 to the right or left from the straight up position.

To lock the steering wheel, push the ignition switch to the OFF position. To unlock the steering wheel, push the ignition switch.

If the ignition switch position does not change from LOCK when pushing the ignition switch, turn the steering wheel right and left, then push the ignition switch again.

If the battery of the vehicle is discharged, the push-button ignition switch position cannot be moved from the LOCK position.

Some indicators and warnings for operation are displayed on the meter. (See “WARNING/ INDICATOR LIGHTS AND AUDIBLE REMINDERS” in the “2. Instruments and controls” section.)

The ignition lock is designed so that the ignition switch position cannot be switched to LOCK until the selector lever is moved to the P (Park) position.

When the ignition switch cannot be pushed toward the LOCK position, proceed as follows:

1. Move the selector lever into the P (Park) position.
2. Push the ignition switch to the OFF position.
3. Open the door. The ignition switch will change to the LOCK position.

The selector lever can be moved from the P (Park) position if the ignition switch is in the ON position and the brake pedal is depressed.

PUSH-BUTTON IGNITION SWITCH POSITIONS

LOCK (Normal parking position)

The ignition switch can only be locked in this position.

The ignition switch will be unlocked when it is pushed to the ACC position while carrying the Intelligent Key.

ACC (Accessories)

This position activates electrical accessories such as the radio, when the engine is not running.

ON (Normal operating position)

This position turns on the ignition system and electrical accessories.

OFF

The engine can be turned off without locking the steering wheel.

The ignition lock is designed so that the ignition switch cannot be switched to the LOCK position until the selector lever is moved to the P (Park) position.

CAUTION

Do not leave the vehicle with the push-button ignition switch in ACC or ON position when the engine is not running for an extended period. This can discharge the battery.

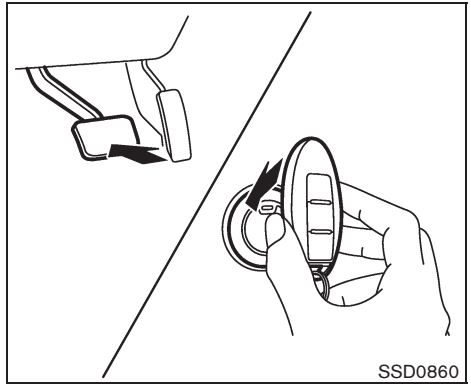

INTELLIGENT KEY BATTERY DISCHARGE

If the battery of the Intelligent Key is discharged, or environmental conditions interfere with the Intelligent Key operation, start the engine according to the following procedure:

1. Move the selector lever to the P (Park) position.
2. Firmly apply the foot brake.
3. Touch the ignition switch with the Intelligent Key as illustrated. (A chime will sound.)
4. Push the ignition switch while depressing the brake pedal within 10 seconds after the

chime sounds. The engine will start.

After step 3 is performed, when the ignition switch is pushed without depressing the brake pedal, the ignition switch position will change to ACC.

NOTE:

- **When the ignition switch is pushed to the ACC or ON position or the engine is started by the above procedures, the Intelligent Key system warning light may blink in yellow even if the Intelligent Key is inside the vehicle. This is not a malfunction. To stop the warning light from blinking, touch the ignition switch with the Intelligent Key again.**
- **If the Intelligent Key system warning light in the meter is blinking in green, replace the battery as soon as possible. (See "KEY BATTERY REPLACEMENT" in the "8. Maintenance and do-it-yourself" section.)**

BEFORE STARTING THE ENGINE

- Make sure the area around the vehicle is clear.
- Check fluid levels such as engine oil, coolant, brake fluid, and window washer fluid as frequently as possible, or at least whenever you refuel.
- Check that all windows and lights are clean.
- Visually inspect tires for their appearance and condition. Also check tires for proper inflation.
- Lock all doors.
- Position seat and adjust head restraints.
- Adjust inside and outside mirrors.
- Fasten seat belts and ask all passengers to do likewise.
- Check the operation of warning lights when the ignition switch is placed in the ON position. (See "WARNING/INDICATOR LIGHTS AND AUDIBLE REMINDERS" in the "2. Instruments and controls" section.)

STARTING THE ENGINE

MODELS WITHOUT INTELLIGENT KEY SYSTEM

1. Apply the parking brake.
2. **Continuously Variable Transmission (CVT) models:**

   Move the selector lever to the P (Park) or N (Neutral) position. (P is recommended.)

   The starter is designed so that it does not operate unless the selector lever is in either of the above positions.

   Manual Transmission (MT) models:

   Move the shift lever to the N (Neutral) position. Depress the clutch pedal fully to the floor.

   The starter is designed not to operate unless the clutch pedal is fully depressed.
3. Crank the engine **with your foot off the accelerator pedal** by turning the ignition switch to START. Release the switch when the engine starts. If the engine starts, but fails to run, repeat the above procedure.
   - If the engine is very hard to start in extremely cold weather or when restarting, depress the accelerator pedal a little (approximately 1/3 to the floor) and hold it and then crank the engine. Release the accelerator pedal when the engine

starts.

- If the engine is very hard to start because it is flooded, depress the accelerator pedal all the way to the floor and hold it. Crank the engine for 5 - 6 seconds. After cranking the engine, release the accelerator pedal. Crank the engine **with your foot off the accelerator pedal** by turning the ignition switch to START. Release the ignition switch when the engine starts. If the engine starts, but fails to run, repeat the above procedure.

CAUTION

Do not operate the starter for more than 15 seconds at a time. If the engine does not start, turn the ignition switch off and wait 10 seconds before cranking again, otherwise the starter could be damaged.

4. **Warm-up**

   Allow the engine to idle for at least 30 seconds after starting. Do not race the engine while warming it up. Drive at moderate speed for a short distance first, especially in cold weather. In cold weather, keep the engine running for a minimum of 2 - 3 minutes before shutting it off. Starting and stopping the engine over a short period of time may make the vehicle more difficult to start.

5. To stop the engine, move the selector lever to the P (Park) position (CVT model) or move the shift lever to the N (Neutral) position (MT model), and turn the ignition switch to the OFF position.

MODELS WITH INTELLIGENT KEY SYSTEM

1. Apply the parking brake.
2. Move the selector lever to the P (Park) or N (Neutral) position. (P is recommended.)

   The starter is designed not to operate unless the selector lever is in either of the above positions.

   The Intelligent Key must be carried when operating the ignition switch.

3. Push the ignition switch to the ON position. Depress the brake pedal and push the ignition switch to start the engine.

   To start the engine immediately, push and release the ignition switch while depressing the brake pedal with the ignition switch in any position.

   - If the engine is very hard to start in extremely cold weather or when restarting, depress the accelerator pedal a little (approximately 1/3 to the floor) and while holding, crank the engine. Release the accelerator pedal when the engine starts.
   - If the engine is very hard to start because it is flooded, depress the accelerator pedal all the way to the floor and hold it. Push the ignition switch to the ON position to start cranking the engine. After 5 or 6 seconds, stop cranking by pushing the ignition switch to OFF. After cranking the engine, release the accelerator pedal. Crank the engine **with your foot off the accelerator pedal** by depressing the brake pedal and pushing the push-button ignition switch to start the engine. If the engine starts, but fails to run, repeat the above procedure.

CAUTION

Do not operate the starter for more than 15 seconds at a time. If the engine does not start, push the ignition switch to OFF and wait 10 seconds before cranking again, otherwise the starter could be damaged.

4. **Warm-up**

   Allow the engine to idle for at least 30 seconds after starting. Do not race the engine while warming it up. Drive at moderate speed for a short distance first, especially in cold weather. In cold weather, keep the engine running for a minimum of 2 - 3 minutes before shutting it off. Starting and stopping the engine over a short period of time may make the vehicle more difficult to start.

   When racing the engine up to 4,000 rpm or more under no load condition, the engine will enter the fuel cut mode.

5. To stop the engine, move the selector lever to the P (Park) position, and push the ignition switch to the OFF position.

CONTINUOUSLY VARIABLE TRANSMISSION (CVT)

The Continuously Variable Transmission (CVT) in your vehicle is electronically controlled to produce maximum power and smooth operation.

The recommended operating procedures for this transmission are shown on the following pages. Follow these procedures for maximum vehicle performance and driving enjoyment.

Engine power may be automatically reduced to protect the CVT if the engine speed increases quickly when driving on slippery roads or while being tested on some dynamometers.

Starting the vehicle

1. After starting the engine, fully depress the foot brake pedal before moving the selector lever out of the P (Park) position.

   This CVT is designed so that the foot brake pedal must be depressed before shifting from P (Park) to any driving position while the ignition switch is in the ON position.

   The selector lever cannot be moved out of the P (Park) position and into any of the other positions if the ignition switch is placed in the LOCK, OFF or ACC position or if the key is removed.

2. Keep the foot brake pedal depressed, push the selector lever button and move the selector lever to a driving position.

3. Release the parking brake and foot brake pedal, and then gradually start the vehicle in motion.

WARNING

- **Do not depress the accelerator pedal while shifting from P (Park) or N (Neutral) to R (Reverse), D (Drive) or L (Low). Always depress the brake pedal until shifting is completed. Failure to do so could cause you to lose control and have an accident.**
- **Cold engine idle speed is high, so use caution when shifting into a forward or reverse gear before the engine has warmed up.**
- **Never shift to P (Park) or R (Reverse) while vehicle is moving. Failure to do so could cause you to lose control and have an accident.**

CAUTION

- **When stopping the vehicle on an uphill grade, do not hold the vehicle by depressing the accelerator pedal. The foot brake should be used for this purpose.**
- **Do not downshift abruptly on slippery roads. This may cause a loss of control.**

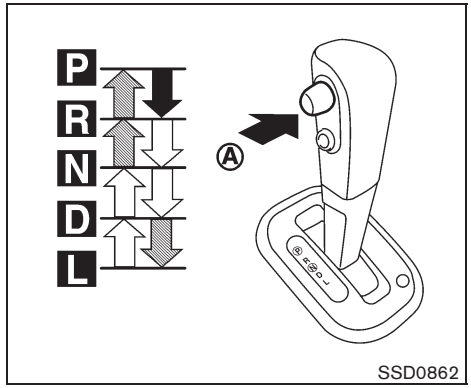

Shifting

To move the selector lever,

➡: Push the button Ⓐ while depressing the brake pedal.

⇨: Push the button Ⓐ .

⇨: Just move the selector lever.

After starting the engine, fully depress the brake pedal, push the selector lever button and move the selector lever from the P (Park) position to any of the desired shift positions.

WARNING

Apply the parking brake if the selector lever is in any position while the engine is not running. Failure to do so could cause the vehicle to move unexpectedly or roll away and result in serious personal injury or property damage.

If the ignition switch is placed in the OFF or ACC position for any reason while the selector lever is in any positions other than the P (Park), the ignition switch cannot be placed in the LOCK position.

If the ignition switch cannot be placed in the LOCK position, perform the following steps:

1. Apply the parking brake when the vehicle is stopped.
2. Place the ignition switch in the ON position while depressing the foot brake pedal.
3. Move the selector lever to the P (Park) position.
4. **Models with Intelligent Key system:**

   Place the ignition switch in the OFF position.

   Models without Intelligent Key system:

   Place the ignition switch in the LOCK

position.

CAUTION

To prevent transmission damage, move the selector lever to the P (Park) or R (Reverse) position only when the vehicle is completely stopped.

P (Park):

Use this selector position when the vehicle is parked or when starting the engine. Make sure the vehicle is completely stopped. **The brake pedal must be depressed and the selector lever button pushed in to move the selector lever from N (Neutral) or any drive position to P (Park).** Apply the parking brake. When parking on a hill, apply the parking brake first, then move the selector lever to the P (Park) position.

R (Reverse):

Use this position to back up. Make sure the vehicle is completely stopped before selecting the R (Reverse) position. **The brake pedal must be depressed and the selector lever button pushed in to move the selector lever from P (Park), N (Neutral) or any driving position to R (Reverse).**

N (Neutral):

Neither forward nor reverse gear is engaged. The engine can be started in this position. You may shift to N (Neutral) and restart a stalled engine while the vehicle is moving.

D (Drive):

Use this position for all normal forward driving.

L (Low):

Use this position for maximum engine braking on steep downhill gradients/climbing steep slopes and whenever approaching sharp bends. Do not use the L (Low) position in any other circumstances.

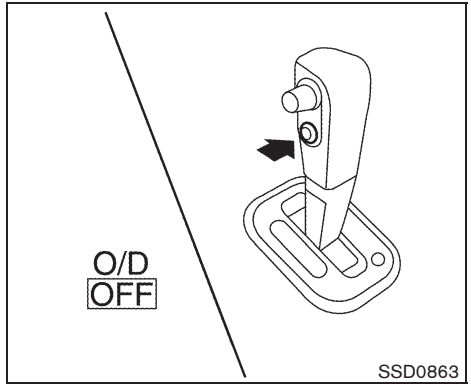

Overdrive (O/D) OFF switch (if so equipped)

When the O/D OFF switch is pushed with the selector lever in the D (Drive) position, the O/D OFF indicator light in the instrument panel illuminates.

Use the overdrive off mode when you need improved engine braking.

To turn off the overdrive off mode, push the O/D OFF switch again. The O/D OFF indicator light will turn off.

Each time the engine is started, or when the selector lever is shifted to any position other than the D (Drive) position, the overdrive off mode will be automatically turned off.

Accelerator downshift
— In D position —

For passing or hill climbing, fully depress the accelerator pedal to the floor. This shifts the transmission down into a lower gear, depending on the vehicle speed.

High fluid temperature protection mode

This transmission has a high fluid temperature protection mode. If the fluid temperature becomes too high (for example, when climbing steep grades in high temperature with heavy loads), engine power and, under some conditions, vehicle speed will be decreased automatically to reduce the chance of transmission damage. Vehicle speed can be controlled with the accelerator pedal, but the engine and vehicle speed may be limited.

Fail-safe

If the vehicle is driven under extreme conditions, such as excessive wheel spinning and subsequent hard braking, the fail-safe system may be activated. The MIL may illuminate to indicate the fail-safe mode is activated. (See "Malfunction Indicator Light (MIL)" in the "2. Instruments and controls" section.) This will occur even if all electrical circuits are functioning properly. In this case, place the ignition switch in the OFF position and wait for 10 seconds. Then turn the switch back to the ON position. The vehicle should return to its normal operating condition. If it does not return to its normal operating condition, have a NISSAN dealer check the transmission and repair if necessary.

WARNING

When the high fluid temperature protection mode or fail-safe operation occurs, vehicle speed may be gradually reduced. The reduced speed may be lower than other traffic, which could increase the chance of a collision. Be especially careful when driving. If necessary, pull to the side of the road at a safe place and allow the transmission to return to normal operation, or have it repaired if necessary.

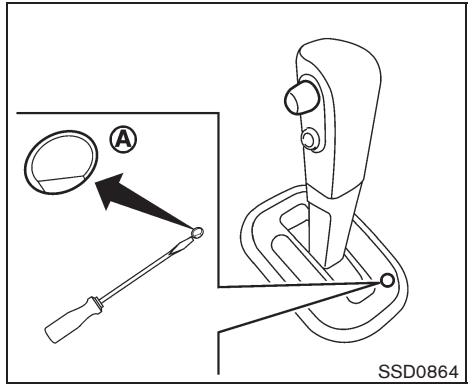

Shift lock release

If the battery charge is low or discharged, the selector lever may not be moved from the P (Park) position even with the brake pedal depressed and the selector lever button pushed.

To move the selector lever, perform the following procedure:

1. **Models with Intelligent Key system:**

   Place the ignition switch in the OFF or LOCK position.

   Models without Intelligent Key system:

   Place the ignition switch in the LOCK position, and remove the key if it is inserted.

2. Apply the parking brake.
3. Remove the shift lock release cover Ⓐ using a suitable tool.
4. Push down the shift lock release using a suitable tool.
5. Push the selector lever button and move the selector lever to the N (Neutral) position while holding down the shift lock release.

Place the ignition switch in the ON position to unlock the steering wheel. The vehicle may be moved to the desired location.

Replace the removed shift lock release cover after the operation.

For models with Intelligent Key system: If the battery is discharged completely, the steering wheel cannot be unlocked. Do not move the vehicle with the steering wheel locked.

If the selector lever cannot be moved out of the P (Park) position, have a NISSAN dealer check the CVT system as soon as possible.

WARNING

If the selector lever cannot be moved from the P (Park) position while the engine is running and the brake pedal is depressed, the stop lights may not work. Malfunctioning stop lights could cause an accident injuring yourself and others.

MANUAL TRANSMISSION (MT)

WARNING

- **Do not downshift abruptly on slippery roads. This may cause a loss of control.**
- **Do not over-rev the engine when shifting to a lower gear. This may cause a loss of control or engine damage.**

CAUTION

- **Do not rest your foot on the clutch pedal while driving. This may damage the clutch.**
- **Fully depress the clutch pedal before shifting to help prevent transmission damage.**
- **Stop your vehicle completely before shifting into R (Reverse).**
- **When the vehicle is stopped for a period of time, for example at a stop light, shift to N (Neutral) and release the clutch pedal with the foot brake applied.**

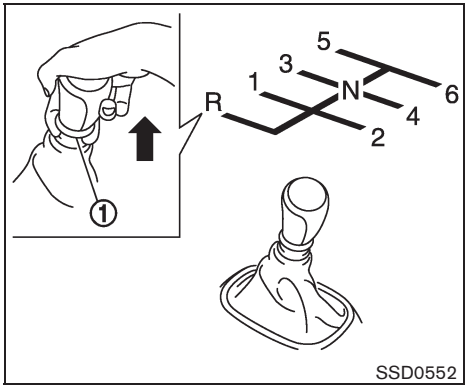

Shifting

To change gears, or when upshifting or downshifting, fully depress the clutch pedal, shift into the appropriate gear, then slowly and smoothly release the clutch pedal.

Start the vehicle in 1st gear and shift to 2nd, 3rd, 4th, 5th and 6th gear in sequence according to vehicle speed.

To back up, pull the shift lever ring ① upward and then move it to the R (Reverse) gear after stopping the vehicle completely.

The shift lever ring returns to its original position when the shift lever is moved to the N (Neutral) position.

If it is difficult to move the shift lever into the R (Reverse) or 1st gear, shift to the N (Neutral) position, and then release the clutch pedal once. Fully depress the clutch pedal again and shift into the R (Reverse) or 1st gear.

Suggested upshift speeds

The following are suggested vehicle speeds for shifting into a higher gear. These suggestions relate to fuel economy and vehicle performance. Actual upshift speeds will vary according to road conditions, the weather and individual driving habits.

For normal acceleration in low altitude areas [less than 4,000 ft (1,219 m)]:

Gear change	MPH (km/h)
1st to 2nd	8 (13)
2nd to 3rd	17 (27)
3rd to 4th	25 (40)
4th to 5th	36 (58)
5th to 6th	51 (82)

For normal acceleration in high altitude areas [over 4,000 ft (1,219 m)]:

Gear change	MPH (km/h)
1st to 2nd	15 (24)
2nd to 3rd	25 (40)
3rd to 4th	40 (64)
4th to 5th	45 (72)
5th to 6th	51 (82)

Suggested maximum speed in each gear

Downshift to a lower gear if the engine is not running smoothly, or if you need to accelerate.

Do not exceed the maximum suggested speed (shown below) in any gear. For level road driving, use the highest gear suggested for that speed. Always observe posted speed limits, and drive according to the road conditions, which will ensure safe operation. Do not over-rev the engine when shifting to a lower gear as it may cause engine damage or loss of vehicle control.

Gear	MPH (km/h)
1st	28 (46)
2nd	50 (82)
3rd	73 (119)
4th	—
5th	—
6th	—

WARNING

- **Be sure the parking brake is fully released before driving. Failure to do so can cause brake failure and lead to an accident.**
- **Do not release the parking brake from outside the vehicle.**
- **Do not use the gear shift in place of the parking brake. When parking, be sure the parking brake is fully engaged.**
- **Do not leave children unattended in a vehicle. They could release the parking brake and cause an accident.**

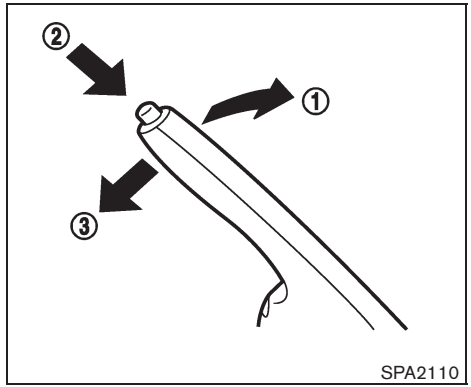

SPA2110

To apply: Pull the parking brake lever up ①.

To release:

1. Firmly apply the foot brake.
2. While pulling up on the parking brake lever slightly, push the button ② and lower the lever completely ③.
3. Before driving, be sure the brake warning light goes out.

PRECAUTIONS ON CRUISE CONTROL

- If the cruise control system malfunctions, it will cancel automatically. The CRUISE indicator light on the meter panel will then blink to warn the driver.
- If the engine coolant temperature becomes excessively high, the cruise control system will cancel automatically.
- If the CRUISE indicator light blinks, turn the cruise control MAIN switch off and have the system checked by a NISSAN dealer.
- The CRUISE indicator light may blink when the cruise control MAIN switch is turned ON while pushing the RESUME/ACCELERATE, SET/COAST or CANCEL switch. To properly set the cruise control system, perform the following procedures.

WARNING

Do not use the cruise control when driving under the following conditions:

- **when it is not possible to keep the vehicle at a set speed**
- **in heavy traffic or in traffic that varies in speed**
- **on winding or hilly roads**
- **on slippery roads (rain, snow, ice, etc.)**
- **in very windy areas**

Doing so could cause a loss of vehicle control and result in an accident.

CAUTION

On Manual Transmission (MT) models, do not shift into N (Neutral) without depressing the clutch pedal when the cruise control is set. Should this occur, depress the clutch pedal and turn the MAIN switch off immediately. Failure to do so may cause engine damage.

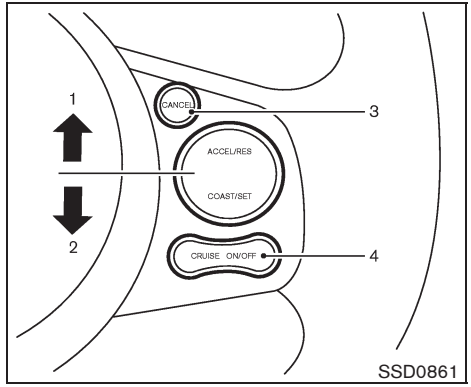

1. RESUME/ACCELERATE switch
2. SET/COAST switch
3. CANCEL switch
4. MAIN (ON·OFF) switch

CRUISE CONTROL OPERATIONS

The cruise control allows driving at a speed between 25 to 89 MPH (40 to 144 km/h) without keeping your foot on the accelerator pedal.

To turn on the cruise control, push the MAIN switch on. The CRUISE indicator light will illuminate.

To set cruising speed, accelerate the vehicle to the desired speed, push the SET/COAST

switch and release it. Take your foot off the accelerator pedal. Your vehicle will maintain the set speed.

- **To pass another vehicle,** depress the accelerator pedal. When you release the pedal, the vehicle will return to the previously set speed.
- The vehicle may not maintain the set speed on winding or hilly roads. If this happens, drive without the cruise control.

To cancel the preset speed, use one of the following methods:

a) Push the CANCEL switch.

b) Tap the brake pedal.

c) Turn the MAIN switch off. The CRUISE light will turn off.

- If you depress the brake pedal while pushing the RESUME/ACCELERATE or SET/COAST switch and reset at the cruising speed, the cruise control will disengage. Turn the MAIN switch off once and then turn it on again.
- The cruise control will automatically cancel if the vehicle slows more than 8 MPH (12 km/h) below the set speed.
- If you move the selector lever to the N (Neutral) position (Continuously Variable Transmission models) or depressing the clutch pedal (Manual Transmission models), the cruise control will be canceled.

To reset at a faster cruising speed, use one of the following methods:

- Depress the accelerator pedal. When the vehicle attains the desired speed, push and release the SET/COAST switch.
- Push and hold the RESUME/ACCELERATE switch. When the vehicle attains the desired speed, release the switch.
- Push, then quickly release the RESUME/ACCELERATE switch. Each time you do this, the set speed will increase by about 1 MPH (1.6 km/h).

To reset at a slower cruising speed, use one of the following methods:

- Lightly tap the brake pedal. When the vehicle attains the desired speed, push the SET/COAST switch and release it.
- Push and hold the SET/COAST switch. Release the switch when the vehicle slows down to the desired speed.
- Push, then quickly release the SET/COAST switch. Each time you do this, the set speed will decrease by about 1 MPH (1.6 km/h).

To resume the preset speed, push and release the RESUME/ACCELERATE switch. The vehicle will resume the last set cruising speed when the vehicle speed is over 25 MPH (40 km/h).

BREAK-IN SCHEDULE

CAUTION

During the first 1,200 miles (2,000 km), follow these recommendations to obtain maximum engine performance and ensure the future reliability and economy of your new vehicle. Failure to follow these recommendations may result in shortened engine life and reduced engine performance.

- Avoid driving for long periods at constant speed, either fast or slow. Do not run the engine over 4,000 rpm.
- Do not accelerate at full throttle in any gear.
- Avoid quick starts.
- Avoid hard braking as much as possible.

INCREASING FUEL ECONOMY

- Accelerate slowly and smoothly. Maintain cruising speeds with a constant accelerator position.
- Drive at moderate speeds on the highway. Driving at high speed lowers fuel economy.
- Avoid unnecessary stopping and braking. Keep a safe distance behind other vehicles.
- Select a gear range suitable to road conditions.
- Avoid unnecessary engine idling.
- Keep your engine tuned up.
- Follow the recommended periodic maintenance schedule.
- Keep the tires inflated to the correct pressure. Low tire pressure increases tire wear and lowers fuel economy.
- Keep the wheels in correct alignment. Improper alignment increases tire wear and lowers fuel economy.
- Air conditioner operation lowers fuel economy. Use the air conditioner only when necessary.
- When cruising at highway speeds, it is more economical to use the air conditioner and leave the windows closed to reduce drag.
- Use the recommended viscosity engine oil. (See “ENGINE OIL AND OIL FILTER RECOMMENDATION” in the “9. Technical and consumer information” section.)

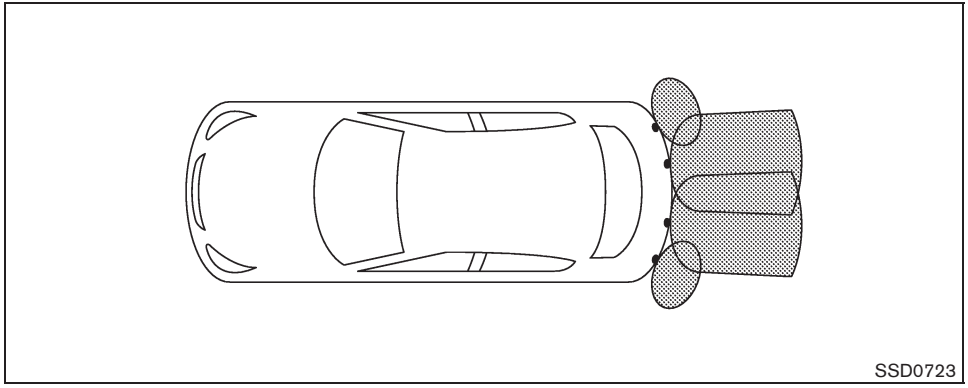

WARNING

- **The sonar system is a convenience but it is not a substitute for proper parking. Always look around and check that it is safe to do so before parking. Always move slowly.**
- **Read and understand the limitations of the sonar system as contained in this section. Inclement weather may affect the function of the sonar system; this may include reduced performance or a false activation.**
- **This system is not designed to prevent contact with small or moving objects.**
- **The system is designed as an aid to the driver in detecting large stationary objects to help avoid damaging the vehicle. The system will not detect small objects below the bumper, and may not detect objects close to the bumper or on the ground.**
- **If your vehicle sustains damage to the bumper fascia, leaving it misaligned or bent, the sensing zone may be altered causing inaccurate measurement of obstacles or false alarms.**

CAUTION

Excessive noise will interfere with the warning chime sound and the chime may not be heard.

When the ignition switch is in the ON position, the sonar system is operational.

The sonar system sounds a tone to warn the driver of obstacles near the bumper. The system detects rear obstacles when the selector lever is in the R (Reverse) position. The system may not detect objects at speeds above 6 MPH (10 km/h) and may not detect certain angular or moving objects.

The sonar system detects obstacles up to 3.9 ft (1.2 m) from the rear bumper with a decreased coverage area at the outer corners of the rear bumper. Refer to the illustration for approximate zone coverage areas. As you move closer to the obstacle, the rate of the tone increases. When the obstacle is less than 11.8 in (30 cm) away, the tone will sound continuously.

Keep the sonar sensors (located on the bumper fascia) free from snow, ice and large accumula-

tions of dirt (do not clean the sensors with sharp objects). If the sensors are covered, it will affect the accuracy of the sonar system.

If the sonar system malfunctions, the beep sounds for 3 seconds when the ignition switch is placed in the ON position. Have the system checked by a NISSAN dealer.

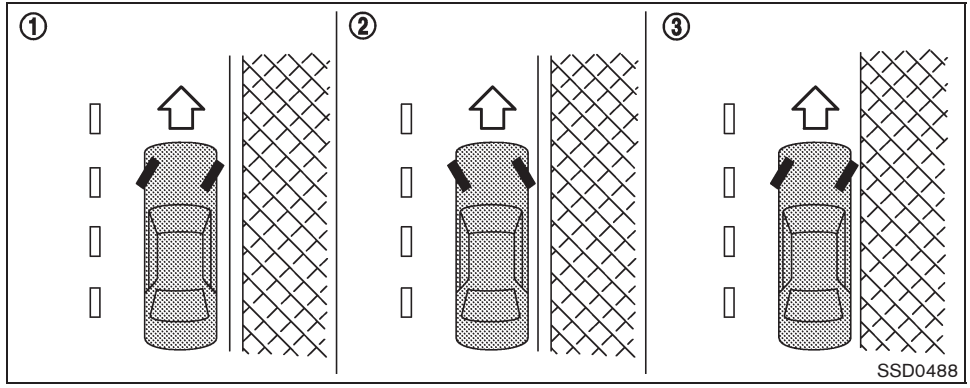

WARNING

- **Do not stop or park the vehicle over flammable materials such as dry grass, waste paper or rags. They may ignite and cause a fire.**
- **Never leave the engine running while the vehicle is unattended.**
- **Do not leave children unattended inside the vehicle. They could unknowingly activate switches or controls. Unattended children could become involved in serious accidents.**
- **Safe parking procedures require that both the parking brake be applied and the transmission placed into P (Park) for Continuously Variable Transmission (CVT) model or in an appropriate gear for Manual Transmission (MT) model. Failure to do so could cause the vehicle to move unexpectedly or roll away and result in an accident.**
- **Make sure the continuously variable transmission selector lever has been pushed as far forward as it**

can go and cannot be moved without depressing the foot brake pedal.

1. Firmly apply the parking brake.
2. **Continuously Variable Transmission (CVT) models:**

   Move the selector lever to the P (Park) position.

   Manual Transmission (MT) models:

   Move the shift lever to the R (Reverse) gear. When parking on an uphill grade, place the shift lever in the 1st gear.
3. To help prevent the vehicle from rolling into the street when parked on a sloping drive way, it is a good practice to turn the wheels as illustrated.

   - HEADED DOWNHILL WITH CURB: ①

   Turn the wheels into the curb and move the vehicle forward until the curb side wheel gently touches the curb.

   - HEADED UPHILL WITH CURB: ②

   Turn the wheels away from the curb and move the vehicle back until the curb side wheel gently touches the curb.

   - HEADED UPHILL OR DOWNHILL, NO CURB: ③

   Turn the wheels toward the side of the road so the vehicle will move away from the center of the road if it moves.
4. **Models with Intelligent Key system:**

   Place the ignition switch in the OFF position.

   Models without Intelligent Key system:

   Place the ignition switch in the LOCK position and remove the key.

WARNING

- **If the engine is not running or is turned off while driving, the power assist for the steering will not work. Steering will be harder to operate.**
- **When the electric power steering warning light illuminates with the engine running, the power assist for the steering will cease operation. You will still have control of the vehicle but the steering will be harder to operate.**

The electric power steering system is designed to provide power assist while driving to operate the steering wheel with light force.

When the steering wheel is operated repeatedly or continuously while parking or driving at a very low speed, the power assist for the steering wheel will be reduced. This is to prevent overheating of the electric power steering system and protect it from getting damaged. While the power assist is reduced, steering wheel operation will become heavy. When the temperature of the electric power steering system goes down, the power assist level will return to normal. Avoid repeating such steering wheel operations that could cause the electric power steering system to overheat.

You may hear a fricative sound when the steering wheel is operated quickly. However, this is not a malfunction.

If the electric power steering warning light **PS** illuminates while the engine is running, it may indicate the electric power steering system is not functioning properly and may need servicing. Have the electric power steering system checked by a NISSAN dealer. (See “Electric power steering warning light” in the “2. Instruments and controls” section.)

When the electric power steering warning light illuminates with the engine running, the power assist for the steering will cease operation. You will still have control of the vehicle. However, greater steering effort is needed, especially in sharp turns and at low speeds.

BRAKING PRECAUTIONS

The brake system has two separate hydraulic circuits. If one circuit malfunctions, you will still have braking at two wheels.

You may feel a small click and hear a sound when the brake pedal is fully depressed slowly. This is not a malfunction and indicates that the brake assist mechanism is operating properly.

Vacuum assisted brakes

The brake booster aids braking by using engine vacuum. If the engine stops, you can stop the vehicle by depressing the brake pedal. However, greater foot pressure on the brake pedal will be required to stop the vehicle and the stopping distance will be longer.

Using the brakes

Avoid resting your foot on the brake pedal while driving. This will cause overheating of the brakes, wearing out the brake pads and shoes faster and reduce gas mileage.

To help reduce brake wear and to prevent the brakes from overheating, reduce speed and downshift to a lower gear before going down a slope or long grade. Overheated brakes may reduce braking performance and could result in loss of vehicle control.

WARNING

- **While driving on a slippery surface, be careful when braking, accelerating or downshifting. Abrupt braking or accelerating could cause the wheels to skid and result in an accident.**
- **If the engine is not running or is turned off while driving, the power assist for the brakes will not work. Braking will be harder.**

Wet brakes

When the vehicle is washed or driven through water, the brakes may get wet. As a result, your braking distance will be longer and the vehicle may pull to one side during braking.

To dry brakes, drive the vehicle at a safe speed while lightly tapping the brake pedal to heat-up the brakes. Do this until the brakes return to normal. Avoid driving the vehicle at high speeds until the brakes function correctly.

ANTI-LOCK BRAKING SYSTEM (ABS)

WARNING

- **The Anti-lock Braking System (ABS) is a sophisticated device, but it cannot prevent accidents resulting from careless or dangerous driving techniques. It can help maintain vehicle control during braking on slippery surfaces. Remember that stopping distances on slippery surfaces will be longer than on normal surfaces even with ABS. Stopping distances may also be longer on rough, gravel or snow covered roads, or if you are using tire chains. Always maintain a safe distance from the vehicle in front of you. Ultimately, the driver is responsible for safety.**
- **Tire type and condition may also affect braking effectiveness.**
  - **When replacing tires, install the specified size of tires on all four wheels.**
  - **When installing a spare tire, make sure that it is the proper size and type as specified on the Tire and Loading Information label. See "TIRE AND LOADING INFORMATION LABEL" in the "9. Technical and consumer information" section of this manual.**
  - **For detailed information, see "WHEELS AND TIRES" in the "8. Maintenance and do-it-yourself" section of this manual.**

The Anti-lock Braking System (ABS) controls the brakes so the wheels do not lock during hard braking or when braking on slippery surfaces. The system detects the rotation speed at each wheel and varies the brake fluid pressure to prevent each wheel from locking and sliding. By preventing each wheel from locking, the system helps the driver maintain steering control and helps to minimize swerving and spinning on slippery surfaces.

Using the system

Depress the brake pedal and hold it down. Depress the brake pedal with firm steady pressure, but do not pump the brakes. The ABS will operate to prevent the wheels from locking up. Steer the vehicle to avoid obstacles.

WARNING

Do not pump the brake pedal. Doing so may result in increased stopping distances.

Self-test feature

The ABS includes electronic sensors, electric pumps, hydraulic solenoids and a computer. The computer has a built-in diagnostic feature that tests the system each time you start the engine and move the vehicle at a low speed in forward or reverse. When the self-test occurs, you may hear a "clunk" noise and/or feel a pulsation in the brake pedal. This is normal and does not indicate a malfunction. If the computer senses a malfunction, it switches the ABS off and illuminates the ABS warning light on the instrument panel. The brake system then operates normally, but without anti-lock assistance.

If the ABS warning light illuminates during the self-test or while driving, have the vehicle checked by a NISSAN dealer.

Normal operation

The ABS operates at speeds above 3 to 6 MPH (5 to 10 km/h). The speed varies according to road conditions.

When the ABS senses that one or more wheels are close to locking up, the actuator rapidly

applies and releases hydraulic pressure. This action is similar to pumping the brakes very quickly. You may feel a pulsation in the brake pedal and hear a noise from under the hood or feel a vibration from the actuator when it is operating. This is normal and indicates that the ABS is operating properly. However, the pulsation may indicate that road conditions are hazardous and extra care is required while driving.

When accelerating or driving on slippery surfaces, the tires may spin or slide. With the Vehicle Dynamic Control (VDC) system, sensors detect these movements and control the braking and engine output to help improve vehicle stability.

- When the VDC system is operating, the “SLIP” indicator in the instrument panel blinks.
- If the “SLIP” indicator blinks, the road conditions are slippery. Be sure to adjust your speed and driving to these conditions. Be sure to drive carefully. (See “Slip indicator light” in the “2. Instruments and controls” section, and “Vehicle Dynamic Control (VDC) off indicator light” in the “2. Instruments and controls” section.)
- Indicator light

  If a malfunction occurs in the system, the “SLIP” and “VDC OFF” indicator lights illuminate in the instrument panel. As long as these indicators are illuminated, the VDC system function is canceled.

The VDC system uses an Active Brake Limited Slip (ABLS) function to improve vehicle traction. The ABLS system works when one of the driving wheels is spinning on a slippery surface. The ABLS system brakes the spinning wheel, which distributes the driving power to the other drive wheel. If the vehicle is operated with the VDC OFF switch pushed and the VDC system turned off, all VDC systems will be turned off. The ABLS system and ABS will still operate with the VDC system off. If the ABLS system is activated, the “SLIP” indicator will blink and you may hear a clunk noise and/or feel a pulsation in the brake pedal. This is normal and is not an indication of a malfunction.

While the VDC system is operating, you may feel a pulsation in the brake pedal and hear a noise or feel a vibration from under the hood. This is normal and indicates that the VDC system is working properly.

The VDC system computer has a built-in diagnostic feature that tests the system each time you start the engine and move the vehicle at a low speed forward or backward. When the self-test occurs, you may hear a “clunk” noise and/or feel a pulsation in the brake pedal. This is normal and is not an indication of a malfunction.

WARNING

- **The VDC system is designed to help improve driving stability but does not prevent accidents due to abrupt steering operation at high speeds or due to careless or dangerous driving techniques. Reduce vehicle**

speed and be especially careful when driving and cornering on slippery surfaces and always drive carefully.

- **Do not modify the vehicle's suspension. If suspension parts such as shock absorbers, struts, springs, stabilizer bars and bushings and wheels are not NISSAN approved or are extremely deteriorated the VDC system may not operate properly. This could adversely affect vehicle handling performance, and the "VDC OFF" indicator or "SLIP" indicator or both indicator lights may illuminate.**
- **If brake related parts such as brake pads, rotors and calipers are not standard equipment or are extremely deteriorated, the "VDC OFF" indicator or "SLIP" indicator or both indicator lights may illuminate.**
- **If engine related parts such as muffler are not standard equipment or are extremely deteriorated, the "VDC OFF" indicator or "SLIP" indicator or both indicator lights may illuminate.**
- **When driving on extremely inclined surfaces such as higher banked corners, the VDC system may not operate properly and the "VDC OFF" indicator or "SLIP" indicator or both indicator lights may illuminate. Do not drive on these types of roads.**
- **When driving on unstable surfaces such as a turntable, ferry, elevator or ramp, the "VDC OFF" indicator or "SLIP" indicator or both indicator lights may illuminate. This is not a malfunction. Restart the engine after driving onto a stable surface.**
- **If wheels or tires other than those recommended are used, the VDC system may not operate properly and "VDC OFF" indicator or "SLIP" indicator or both indicator lights may illuminate.**
- **The VDC system is not a substitute for winter tires or tire chains on a snow covered road.**

FREEING A FROZEN DOOR LOCK

To prevent a door lock from freezing, apply deicer through the key hole. If the lock becomes frozen, heat the key before inserting it into the key hole or use the remote keyless entry keyfob.

ANTI-FREEZE

In the winter when it is anticipated that the outside temperature will drop below 32°F (0°C), check the anti-freeze to assure proper winter protection. For additional information, see "ENGINE COOLING SYSTEM" in the "8. Maintenance and do-it-yourself" section.

BATTERY

If the battery is not fully charged during extremely cold weather conditions, the battery fluid may freeze and damage the battery. To maintain maximum efficiency, the battery should be checked regularly. For additional information, see "BATTERY" in the "8. Maintenance and do-it-yourself" section.

DRAINING OF COOLANT WATER

If the vehicle is to be left outside without anti-freeze, drain the cooling system, including the engine block. Refill before operating the vehicle. For details, see "ENGINE COOLING SYSTEM" in the "8. Maintenance and do-it-yourself" section.

TIRE EQUIPMENT

SUMMER tires have a tread designed to provide superior performance on dry pavement. However, the performance of these tires will be substantially reduced in snowy and icy conditions. If you operate your vehicle on snowy or icy roads, NISSAN recommends the use of MUD & SNOW or ALL SEASON tires on all four wheels. Consult a NISSAN dealer for the tire type, size, speed rating and availability information.

For additional traction on icy roads, studded tires may be used. However, some U.S. states and Canadian provinces prohibit their use. Check local, state and provincial laws before installing studded tires.

Skid and traction capabilities of studded snow tires, on wet or dry surfaces, may be poorer than that of non-studded snow tires.

Tire chains may be used. For details, see “TIRE CHAINS” in the “8. Maintenance and do-it-yourself” section of this manual.

SPECIAL WINTER EQUIPMENT

It is recommended that the following items be carried in the vehicle during winter:

- A scraper and stiff-bristled brush to remove ice and snow from the windows and wiper blades.
- A sturdy, flat board to be placed under the jack to give it firm support.
- A shovel to dig the vehicle out of snowdrifts.
- Extra window washer fluid to refill the reservoir tank.

DRIVING ON SNOW OR ICE

WARNING

- **Wet ice (32°F, 0°C and freezing rain), very cold snow or ice can be slick and very hard to drive on. The vehicle will have much less traction or “grip” under these conditions. Try to avoid driving on wet ice until the road is salted or sanded.**
- **Whatever the condition, drive with caution. Accelerate and slow down with care. If accelerating or downshifting too fast, the drive wheels will lose even more traction.**
- **Allow more stopping distance under these conditions. Braking should be started sooner than on dry pavement.**
- **Allow greater following distances on slippery roads.**
- **Watch for slippery spots (glare ice). These may appear on an otherwise clear road in shaded areas. If a patch of ice is seen ahead, brake before reaching it. Try not to brake while on the ice, and avoid any sudden steering maneuvers.**
- **Do not use cruise control on slippery roads.**
- **Snow can trap dangerous exhaust gases under your vehicle. Keep snow clear of the exhaust pipe and from around your vehicle.**

ENGINE BLOCK HEATER (if so equipped)

Engine block heaters are used to assist in cold temperature starting.

The engine block heater should be used when the outside temperature is 20°F (−7°C) or lower.

To use the engine block heater

1. Turn the engine off.
2. Open the hood and unwrap the engine block heater cord.
3. Plug the engine block heater cord into a grounded 3-wire, 3-pronged extension cord.
4. Plug the extension cord into a Ground Fault Interrupt (GFI) protected, grounded 110-volt AC (VAC) outlet.
5. The engine block heater must be plugged in for at least 2 - 4 hours, depending on outside temperatures, to properly warm the engine coolant. Use an appropriate timer to turn the engine block heater on.
6. Before starting the engine, unplug and properly store the cord to keep it away from moving parts.

WARNING

- **Do not use your engine block heater with an ungrounded electrical system or a 2-pronged adapter. You can be seriously injured by an electrical shock if you use an ungrounded connection.**
- **Disconnect and properly store the engine block heater cord before starting the engine. Damage to the cord could result in an electrical shock and can cause serious injury.**
- **Use a heavy-duty 3-wire, 3-pronged extension cord rated for at least 10A. Plug the extension cord into a Ground Fault Interrupt (GFI) protected, grounded 110-VAC outlet. Failure to use the proper extension cord or a grounded outlet can result in a fire or electrical shock and cause serious personal injury.**

MEMO

MEMO

6 In case of emergency

Flat tire 6-2
Tire Pressure Monitoring System (TPMS) 6-2
Changing a flat tire 6-2
Jump starting 6-8
Push starting 6-10
If your vehicle overheats 6-11
Towing your vehicle 6-12
Towing recommended by NISSAN (except for Krōm models) 6-13
Towing recommended by NISSAN (for Krōm models) 6-14
Vehicle recovery (freeing a stuck vehicle) 6-15

TIRE PRESSURE MONITORING SYSTEM (TPMS)

This vehicle is equipped with the Tire Pressure Monitoring System (TPMS). It monitors tire pressure of all tires except the spare. When the low tire pressure warning light is lit, one or more of your tires is significantly under-inflated. If the vehicle is being driven with low tire pressure, the TPMS will activate and warn you of it by the low tire pressure warning light. This system will activate only when the vehicle is driven at speeds above 16 MPH (25 km/h). For more details, see "WARNING/INDICATOR LIGHTS AND AUDIBLE REMINDERS" in the "2. Instruments and controls" section and "TIRE PRESSURE MONITORING SYSTEM (TPMS)" in the "5. Starting and driving" section.

WARNING

- **If the low tire pressure warning light illuminates while driving, avoid sudden steering maneuvers or abrupt braking, reduce vehicle speed, pull off the road to a safe location and stop the vehicle as soon as possible. Driving with under-inflated tires may permanently damage the tires and increase the likelihood of tire failure. Serious vehicle damage could occur and may lead to an accident and could result in serious personal injury. Check the tire pressure for all four tires. Adjust the tire pressure to the recommended COLD tire pressure shown on the Tire and Loading Information label to turn the low tire pressure warning light OFF. If you have a flat tire, replace it with a spare tire as soon as possible.**
- **When a spare tire is mounted or a wheel is replaced, the TPMS will not function and the low tire pressure warning light will flash for approximately 1 minute. The light will remain on after 1 minute. Contact your NISSAN dealer as soon as possible for tire replacement and/or system resetting.**
- **Replacing tires with those not originally specified by NISSAN could affect the proper operation of the TPMS.**
- **Do not inject any tire liquid or aerosol tire sealant into the tires, as this may cause a malfunction of the tire pressure sensors.**

CHANGING A FLAT TIRE

If you have a flat tire, follow the instructions below.

Stopping the vehicle

1. Safely move the vehicle off the road and away from traffic.
2. Turn on the hazard warning flashers.
3. Park on a level surface and apply the parking brake.
4. **Continuously Variable Transmission (CVT) models:**

   Move the selector lever to the P (Park) position.

   Manual Transmission (MT) models:

   Move the shift lever to the R (Reverse) position.
5. Turn off the engine.
6. Raise the hood to warn other traffic, and to signal professional road assistance personnel that you need assistance.
7. Have all passengers get out of the vehicle and stand in a safe place, away from traffic and clear of the vehicle.

WARNING

- **Make sure the parking brake is securely applied and the Manual Transmission is shifted into R (Reverse), or the Continuously Variable Transmission into P (Park).**
- **Never change tires when the vehicle is on a slope, ice or slippery areas. This is hazardous.**
- **Never change tires if oncoming traffic is close to your vehicle. Wait for professional road assistance.**

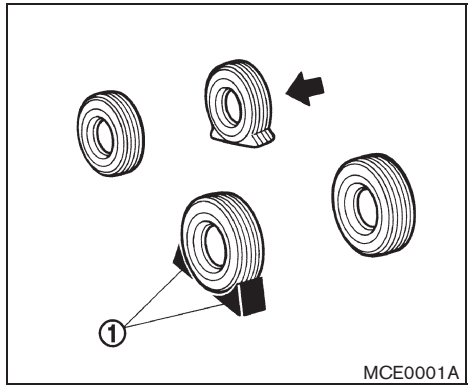

Blocking wheels

Place suitable blocks ① at both the front and back of the wheel diagonally opposite the flat tire to prevent the vehicle from moving when it is jacked up.

WARNING

Be sure to block the wheel as the vehicle may move and result in personal injury.

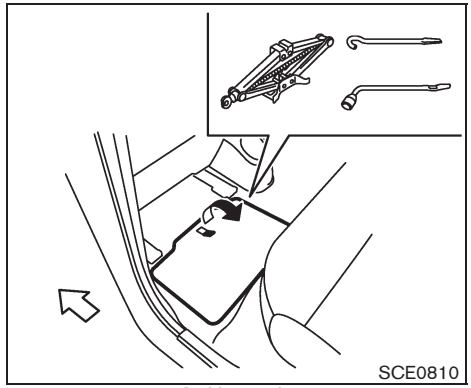

Jacking tools

Getting the spare tire and tools

Jacking tools:

Slide the driver's seat forward and the rear seat in its rear most position, and open the lid located in the floor behind the driver's seat.

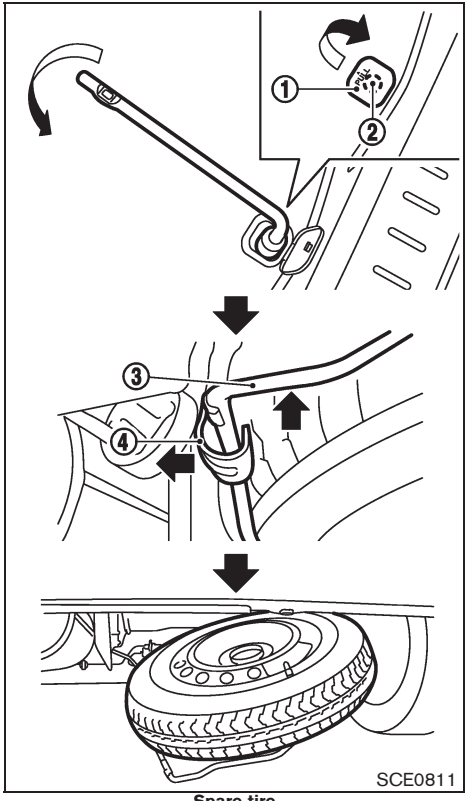

Spare tire

Spare tire:

1. Open the back door.
2. Open the bolt cover ①.
3. Loosen the bolt ② counterclockwise approximately 25 turns using the wheel nut wrench to lower the spare tire.
4. Stop turning the bolt when the tire is lowered to the place where the tire basket ③ can be removed from the hook ④.

   Do not loosen the bolt excessively, otherwise the basket may fall suddenly.
5. Hold the tire basket and remove it from the hook by pushing the basket upward.
6. Lower the tire basket slowly to the ground, and then take out the spare tire.

WARNING

Properly stow the spare tire basket after use. Driving without properly stowing the spare tire basket can cause contact with the road and cause sparks or scatter rocks/road debris resulting in vehicle damage or serious personal injury.

Spare tire basket bolt tightening torque:

48 to 63 ft-lb (64 to 86 N·m)

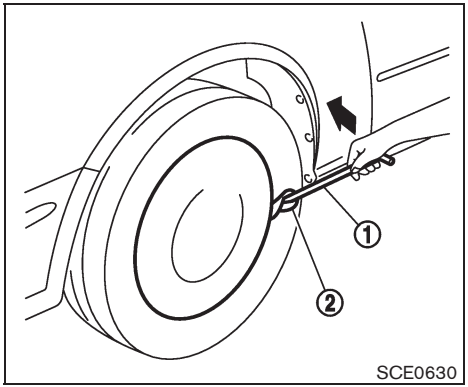

Removing wheel cover (if so equipped)

WARNING

Never use your hands to remove the wheel cover. This may cause personal injury.

To remove the wheel cover, use the jack rod (1) as illustrated.

Apply cloth (2) between the wheel and jack rod to prevent damaging the wheel and wheel cover.

Use caution not to scratch the wheel cover or wheel surface.

Jacking up the vehicle and removing the damaged tire

WARNING

- **Never get under the vehicle while it is supported only by the jack. If it is necessary to work under the vehicle, support it with safety stands.**
- **Use only the jack provided with your vehicle to lift the vehicle. Do not use the jack provided with your vehicle on other vehicles. The jack is designed for lifting only your vehicle during a tire change.**
- **Use the correct jack-up points. Never use any other part of the vehicle for jack support.**
- **Never jack up the vehicle more than necessary.**
- **Never use blocks on or under the jack.**
- **Do not start or run the engine while vehicle is on the jack, as it may cause the vehicle to move.**
- **Do not allow passengers to stay in the vehicle while it is on the jack.**

Carefully read the caution label attached to the jack body and the following instructions.

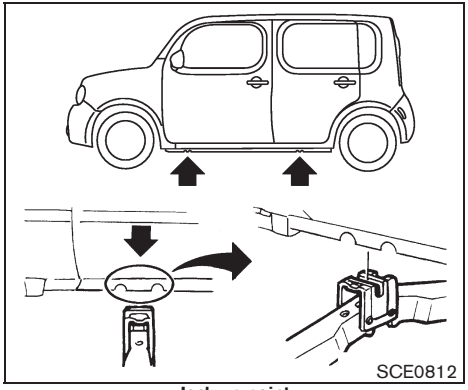

Jack-up point

1. Place the jack directly under the jack-up point as illustrated so the top of the jack contacts the vehicle at the jack-up point. Align the jack head between the two notches in the front or the rear as shown. Also fit the groove of the jack head between the notches as shown.

   The jack should be used on level firm ground.

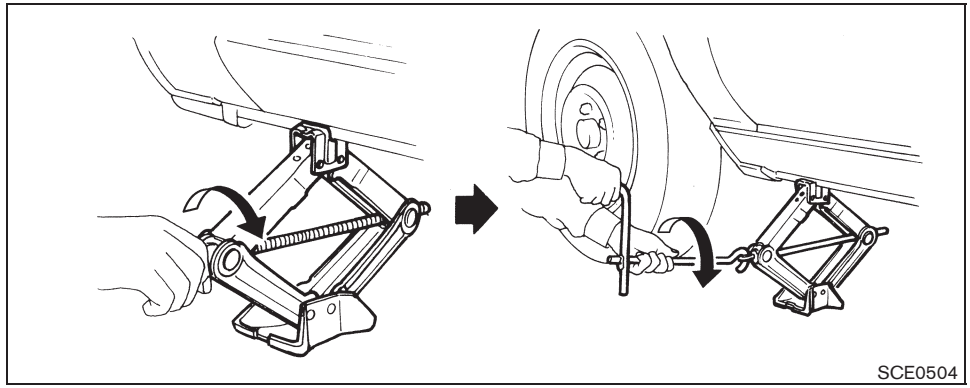

2. Loosen each wheel nut one or two turns by turning it counterclockwise with the wheel nut wrench. **Do not remove the wheel nuts until the tire is off the ground.**

3. To lift the vehicle, securely hold the jack lever and rod with both hands as shown above. Carefully raise the vehicle until the tire clears the ground. Remove the wheel nuts, and then remove the tire.

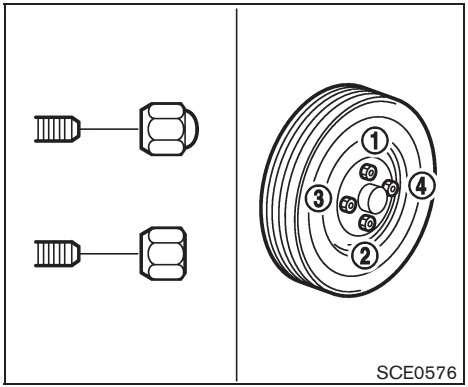

Installing the spare tire

The spare tire is designed for emergency use. (See specific instructions under the heading "WHEELS AND TIRES" in the "8. Maintenance and do-it-yourself" section.)

1. Clean any mud or dirt from the surface between the wheel and hub.
2. Carefully put the spare tire on and tighten the wheel nuts finger tight. Check that all the wheel nuts contact the wheel surface horizontally.
3. With the wheel nut wrench, tighten wheel nuts alternately and evenly in the sequence as illustrated (①, ②, ③, ④), more than 2 times, until they are tight.
4. Lower the vehicle slowly until the tire touches the ground. Then, with the wheel nut wrench, tighten the wheel nuts securely in the sequence as illustrated. Lower the vehicle completely.

WARNING

- **Incorrect wheel nuts or improperly tightened wheel nuts can cause the wheel to become loose or come off. This could cause an accident.**
- **Do not use oil or grease on the wheel studs or nuts. This could cause the nuts to become loose.**
- **Retighten the wheel nuts when the vehicle has been driven for 600 miles (1,000 km) (also in cases of a flat tire, etc.).**

- **As soon as possible, tighten the wheel nuts to the specified torque with a torque wrench.**

Wheel nut tightening torque:
80 ft-lb (108 N·m)

The wheel nuts must be kept tightened to specifications at all times. It is recommended that the wheel nuts be tightened to specifications at each lubrication interval.

- **Adjust tire pressure to the COLD pressure.**

COLD pressure:

After the vehicle has been parked for 3 hours or more or driven less than 1 mile (1.6 km).

COLD tire pressures are shown on the Tire and Loading Information label affixed to the driver side center pillar.

Stowing the damaged tire and the tools

Securely store the jack and tools in the storage area.

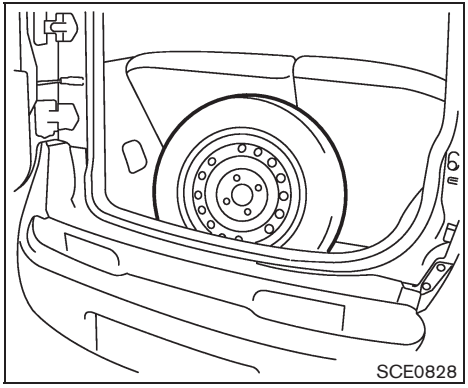

Securely store the damaged tire in the cargo area as illustrated.

The spare tire basket cannot be used for the conventional tire.

Return the spare tire basket to its original position in the reverse order of removal. (See "Getting the spare tire and tools" earlier in this section.)

Spare tire basket bolt tightening torque:

48 to 63 ft-lb (64 to 86 N·m)

WARNING

- **Always make sure that the spare tire and jacking equipment are properly secured after use. Such items can become dangerous projectiles in an accident or sudden stop.**
- **Make sure that the spare tire basket is properly secured in its original position after removing the spare tire.**
- **The spare tire and small size spare tire are designed for emergency use. See specific instructions under the heading "WHEELS AND TIRES" in the "8. Maintenance and do-it-yourself" section.**

JUMP STARTING

To start your engine with a booster battery, the instructions and precautions below must be followed.

WARNING

- **If done incorrectly, jump starting can lead to a battery explosion, resulting in severe injury or death. It could also damage your vehicle.**
- **Explosive hydrogen gas is always present in the vicinity of the battery. Keep all sparks and flames away from the battery.**
- **Do not allow battery fluid to come into contact with eyes, skin, clothing or painted surfaces. Battery fluid is a corrosive sulfuric acid solution which can cause severe burns. If the fluid should come into contact with anything, immediately flush the contacted area with water.**
- **Keep the battery out of the reach of children.**
- **The booster battery must be rated at 12 volts. Use of an improperly rated battery can damage your vehicle.**
- **Whenever working on or near a battery, always wear suitable eye**

protectors (for example, goggles or industrial safety spectacles) and remove rings, metal bands, or any other jewelry. Do not lean over the battery when jump starting.

- **Do not attempt to jump start a frozen battery. It could explode and cause serious injury.**
- **Your vehicle has an automatic engine cooling fan. It could come on at any time. Keep hands and other objects away from it.**

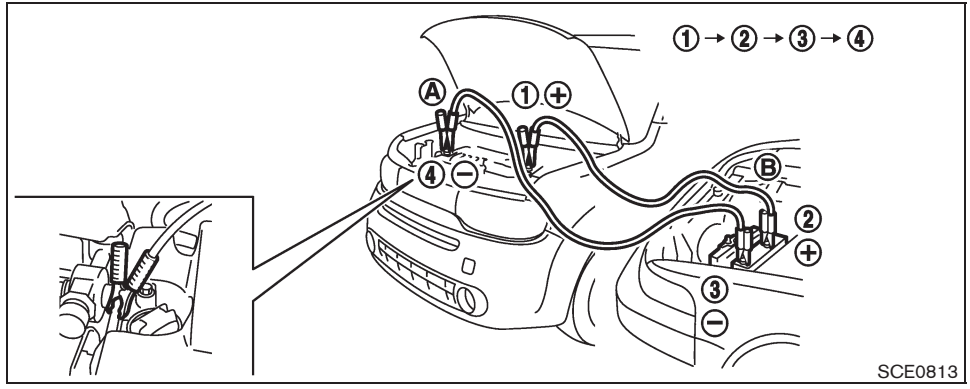

WARNING

Always follow the instructions below. Failure to do so could result in damage to the charging system and cause personal injury.

1. If the booster battery is in another vehicle Ⓑ, position the two vehicles (Ⓐ and Ⓑ) to bring their batteries into close proximity to each other.

   Do not allow the two vehicles to touch.

2. Apply the parking brake.

3. **Continuously Variable Transmission (CVT) models:**

   Move the selector lever to the P (Park) position.

   Manual Transmission (MT) models:

   Move the shift lever to the N (Neutral) position.

4. Switch off all unnecessary electrical systems (headlights, heater, air conditioner, etc.).

5. Remove the vent caps on the battery (if so equipped). Cover the battery with a firmly wrung out moist cloth to reduce explosion hazard.

6. Connect jumper cables in the sequence as illustrated (① → ② → ③ → ④).

   For the vehicle equipped with Intelligent Key system:

   If the battery is discharged, the ignition switch cannot be moved from the OFF position and, if the steering lock is engaged, the steering wheel cannot be moved. Connect the jumper cables to the booster vehicle Ⓑ before turning the ignition switch and disengaging the steering lock.

⚠ CAUTION

- **Always connect positive (+) to positive (+) and negative (–) to body ground (for example, as illustrated), not to the battery.**
- **Make sure the jumper cables do not touch moving parts in the engine compartment and that the cable clamps do not contact any other metal.**

7. Start the engine of the booster vehicle Ⓑ and let it run for a few minutes.
8. Keep the engine speed of the booster vehicle Ⓑ at about 2,000 rpm, and start the engine of the vehicle Ⓐ being jump started.

⚠ CAUTION

Do not keep the starter motor engaged for more than 10 seconds. If the engine does not start right away, place the ignition switch in the OFF position and wait 10 seconds before trying again.

9. After starting your engine, carefully disconnect the negative cable and then the positive cable (④ → ③ → ② → ①).
10. Replace the vent caps (if so equipped). Be sure to dispose of the cloth used to cover the vent holes as it may be contaminated with corrosive acid.

Do not attempt to start the engine by pushing.

⚠ CAUTION

- **Continuously Variable Transmission (CVT) models cannot be push-started or tow-started. Attempting to do so may cause transmission damage.**
- **Three-way catalyst equipped models should not be started by pushing since the three way catalyst may be damaged.**
- **Never try to start the vehicle by towing it; when the engine starts, the forward surge could cause the vehicle to collide with the tow vehicle.**

CAUTION

- **Do not continue to drive if your vehicle overheats. Doing so could cause engine damage or a vehicle fire.**
- **To avoid the danger of being scalded, never remove the radiator cap while the engine is still hot. When the radiator cap is removed, pressurized hot water will spurt out, possibly causing serious injury.**
- **Do not open the hood if steam is coming out.**

If your vehicle is overheating (indicated by an extremely high temperature gauge reading), or if you feel a lack of engine power, detect abnormal noise, etc., take the following steps:

1. Move the vehicle safely off the road and apply the parking brake.
2. **Continuously Variable Transmission (CVT) models:**

   Move the selector lever to the P (Park) position.

   Manual Transmission (MT) models:

   Move the shift lever to the N (Neutral) position.

   Do not stop the engine.
3. Turn off the air conditioner (if so equipped). Open all the windows, move the heater or air conditioner temperature control to maximum hot and fan control to high speed.
4. Get out of the vehicle. Look and listen for steam or coolant escaping from the radiator before opening the hood. (If steam or coolant is escaping, turn off the engine.) Do not open the hood further until no steam or coolant can be seen.
5. Open the engine hood.

WARNING

If steam or water is coming from the engine, stand clear to prevent getting burned.

6. Visually check the drive belt for damage or looseness. Also check if the cooling fan is running. The radiator hoses and radiator should not leak water. If coolant is leaking or the cooling fan does not run, stop the engine.

WARNING

Be careful not to allow your hands, hair, jewelry or clothing to come into contact with, or get caught in, engine belts or the engine cooling fan. The engine cooling fan can start at any time.

7. After the engine cools down, check the coolant level in the reservoir with the engine running. Add coolant to the reservoir if necessary. Have your vehicle repaired at a NISSAN dealer.

TOWING YOUR VEHICLE

When towing your vehicle, all State (Provincial in Canada) and local regulations for towing must be followed. Incorrect towing equipment could damage your vehicle. Towing instructions are available from a NISSAN dealer. Local service operators are familiar with the applicable laws and procedures for towing. To assure proper towing and to prevent accidental damage to your vehicle, NISSAN recommends that you have a service operator tow your vehicle. It is advisable to have the service operator carefully read the following precautions.

WARNING

- **Never ride in a vehicle that is being towed.**
- **Never get under your vehicle after it has been lifted by a tow truck.**

CAUTION

- **When towing, make sure that the transmission, axles, steering system and powertrain are in working condition. If any unit is damaged, dollies must be used.**
- **Always attach safety chains before towing.**

For information about towing your vehicle behind a recreational vehicle (RV), see “FLAT TOWING” in the “9. Technical and consumer information” section of this manual.

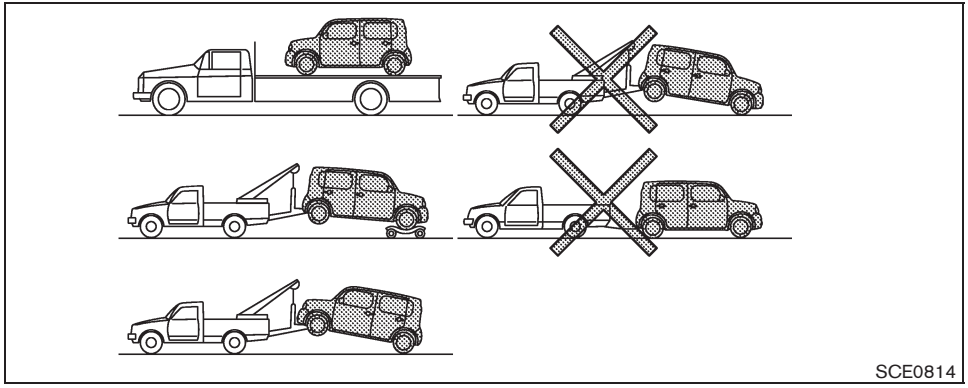

TOWING RECOMMENDED BY NISSAN (except for Krōm models)

NISSAN recommends that your vehicle be towed with the driving (front) wheels off the ground or place the vehicle on a flat bed truck as illustrated.

CAUTION

- **Never tow Continuously Variable Transmission (CVT) models with the front wheels on the ground or four wheels on the ground (forward or backward), as this may cause serious and expensive damage to the transmission. If it is necessary to tow the vehicle with the rear wheels raised, always use towing dollies under the front wheels.**
- **When towing a CVT model or Manual Transmission (MT) model with the front wheels on towing dollies:**
  - **Place the ignition switch in the OFF position (models without Intelligent Key system) or place the ignition switch in the ACC or ON position (models with Intelligent Key system). Secure the steering wheel in a straight-ahead position with a rope or similar device. Never secure the steering wheel by selecting the LOCK position. This may damage the steering lock mechanism.**
  - **Move the selector lever or shift lever to the N (Neutral) position.**
- **When towing a CVT model with the rear wheels on the ground (if you do not use towing dollies): Always release the parking brake.**
- **If you have to tow an MT model with the rear wheels on the ground (if you do not use towing dollies) or four wheels on the ground:**
  - **Place the ignition switch in the ON position and turn off all accessories.**
  - **Always release the parking brake.**
  - **Move the transmission shift lever to the N (Neutral) position.**
  - **Observe the following restricted towing speeds and distances for manual transmission models only:**
    - **Rear wheels on the ground:**

Speed: Below 50 MPH (80 km/h)
Distance: Less than 50 miles (80 km)

- **Four wheels on the ground:**
  Speed: Below 60 MPH (96 km/h)
  Distance: Less than 500 miles (800 km)

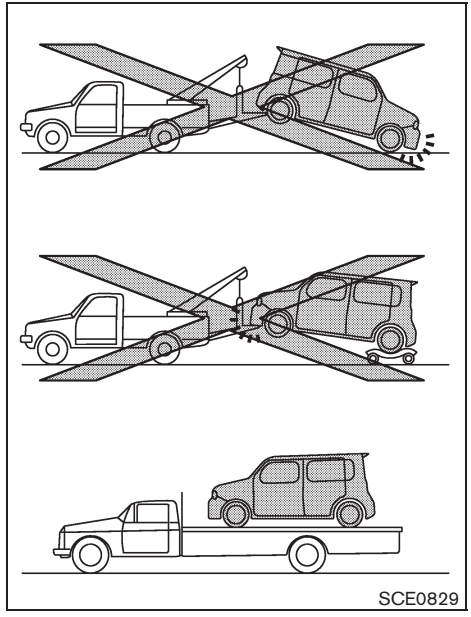

TOWING RECOMMENDED BY NISSAN (for Krōm models)

CAUTION

Do not tow Krōm models with any wheel on the ground, or with the front or rear wheels raised, because this may cause damage to the front or rear bumpers.

NISSAN recommends that you place the vehicle on a flatbed truck as illustrated.

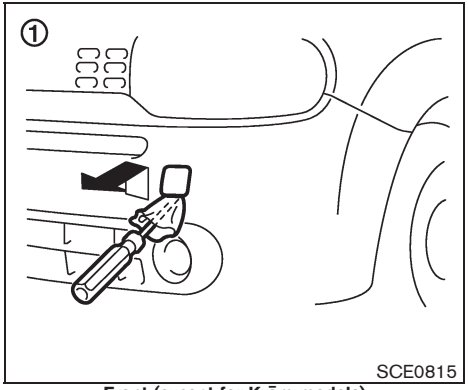

Front (except for Krōm models)

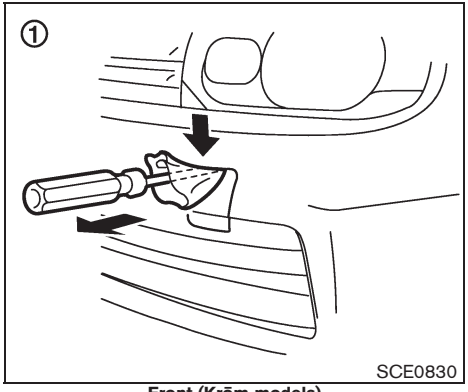

Front (Krōm models)

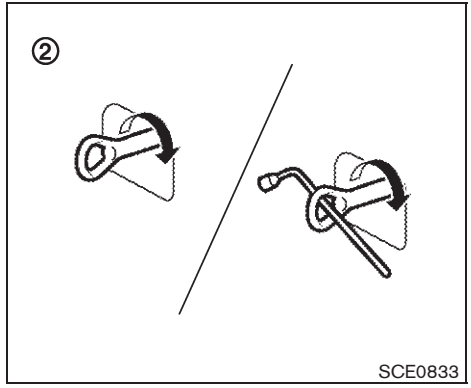

VEHICLE RECOVERY (freeing a stuck vehicle)

WARNING

- **Stand clear of a stuck vehicle.**
- **Do not spin your tires at high speed. This could cause them to explode and result in serious injury. Parts of your vehicle could also overheat and be damaged.**

Pulling a stuck vehicle

Do not use the tie down hook for towing or vehicle recovery.

Front:

1. Remove the hook cover ① from the bumper with a suitable tool.
2. Securely install the recovery hook ② as illustrated. (The hook is stored under the floor behind the driver's seat.)

Make sure that the hook is properly secured in its original position after use.

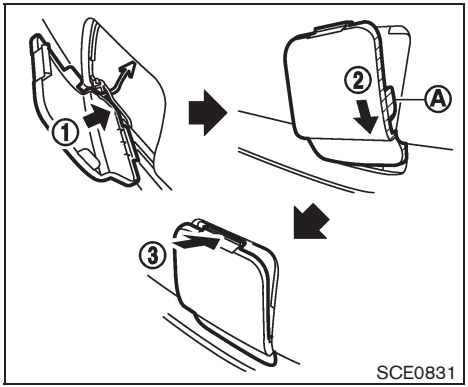

Krōm models

Krōm models: Reinstall the hook cover according to the following procedure as illustrated.

1. Fit the left bottom edge of the cover ① in the opening at an angle.
2. Slide the cover into position ② by aligning the area Ⓐ with the opening.
3. Push the cover in while pushing the upper tab ③.

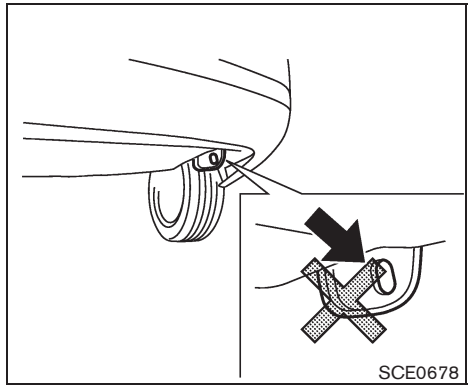

Rear

Rear:

Do not use the tie down hook to pull the vehicle.

CAUTION

- **Tow chains or cables must be attached only to the vehicle recovery hook or main structural members of the vehicle. Otherwise, the vehicle body will be damaged.**
- **Do not use the vehicle tie down hook to free a vehicle stuck in sand, snow, mud, etc.**
- **Never tow a vehicle using the vehicle tie down hook or recovery hook.**
- **Always pull the cable straight out from the front of the vehicle. Never pull on the vehicle at an angle.**
- **Pulling devices should be routed so they do not touch any part of the suspension, steering, brake or cooling systems.**
- **Pulling devices such as ropes or canvas straps are not recommended for use in vehicle towing or recovery.**

Rocking a stuck vehicle

If your vehicle is stuck in sand, snow, mud, etc., use the following procedure:

1. Turn off the Vehicle Dynamic Control (VDC) system.
2. Make sure the area in front and behind the vehicle is clear of obstructions.
3. Turn the steering wheel right and left to clear an area around the front tires.
4. Slowly rock the vehicle forward and backward.
   - Shift back and forth between R (Reverse) and D (Drive) (Continuously Variable Transmission models) or 1st

and R (Reverse) (Manual Transmission models).

- Apply the accelerator as little as possible to maintain the rocking motion.
- Release the accelerator pedal before shifting between R and D (Continuously Variable Transmission models) or 1st and R (Manual Transmission models).
- Do not spin the tires above 35 MPH (55 km/h).

5. If the vehicle cannot be freed after a few tries, contact a professional towing service to remove the vehicle.

MEMO

7 Appearance and care

Cleaning exterior 7-2
Washing 7-2
Waxing 7-3
Removing spots 7-3
Underbody 7-3
Glass 7-3
Wheels 7-3
Chrome parts 7-4
Tire dressing 7-4
Cleaning interior 7-5
Air fresheners 7-5
Floor mats 7-5
Seat belts 7-6
Corrosion protection 7-6
Most common factors contributing to vehicle corrosion 7-6
Environmental factors influence the rate of corrosion 7-6
To protect your vehicle from corrosion 7-7

CLEANING EXTERIOR

In order to maintain the appearance of your vehicle, it is important to take proper care of it.

To protect the paint surfaces, wash your vehicle as soon as you can:

- after a rainfall to prevent possible damage from acid rain
- after driving on coastal roads
- when contaminants such as soot, bird droppings, tree sap, metal particles or bugs get on the paint surface
- when dust or mud builds up on the surface

Whenever possible, store or park your vehicle inside a garage or in a covered area.

When it is necessary to park outside, park in a shady area or protect the vehicle with a body cover.

Be careful not to scratch the paint surface when putting on or removing the body cover.

WASHING

Wash dirt off the vehicle with a wet sponge and plenty of water. Clean the vehicle thoroughly using a mild soap, a special vehicle soap or general purpose dishwashing liquid mixed with clean, lukewarm (never hot) water.

CAUTION

- **Do not use car washes that use acid in the detergent. Some car washes, especially brushless ones, use some acid for cleaning. The acid may react with some plastic vehicle components, causing them to crack. This could affect their appearance, and also could cause them not to function properly. Always check with your car wash to confirm that acid is not used.**
- **Do not wash the vehicle with strong household soap, strong chemical detergents, gasoline or solvents.**
- **Do not wash the vehicle in direct sunlight or while the vehicle body is hot, as the surface may become water-spotted.**
- **Avoid using tight-napped or rough cloths, such as washing mitts. Care must be taken when removing caked-on dirt or other foreign substances so the paint surface is not scratched or damaged.**

Rinse the vehicle thoroughly with plenty of clean water.

Inside flanges, seams and folds on the doors, hatches and hood are particularly vulnerable to the effects of road salt. Therefore, these areas must be regularly cleaned. Make sure that the drain holes in the lower edge of the door are open. Spray water under the body and in the wheel wells to loosen the dirt and wash away road salt.

Avoid leaving water spots on the paint surface by using a damp chamois to dry the vehicle.

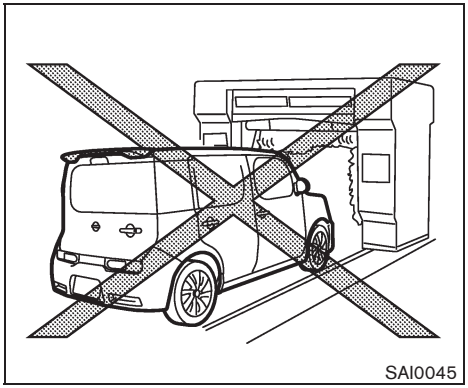

Krōm models

CAUTION

Do not use an automatic car wash for Krōm models. The rear spoiler and the wheel coating may be damaged.

WAXING

Regular waxing protects the paint surface and helps retain new vehicle appearance. Polishing is recommended to remove built-up wax residue and to avoid a weathered appearance before reapplying wax.

A NISSAN dealer can assist you in choosing the proper product.

- Wax your vehicle only after a thorough washing. Follow the instructions supplied with the wax.
- Do not use a wax containing any abrasives, cutting compounds or cleaners that may damage the vehicle finish.

Machine compound or aggressive polishing on a base coat/clear coat paint finish may dull the finish or leave swirl marks.

REMOVING SPOTS

Remove tar and oil spots, industrial dust, insects, and tree sap as quickly as possible from the paint surface to avoid lasting damage or staining. Special cleaning products are available at a NISSAN dealer or any automotive accessory stores.

UNDERBODY

In areas where road salt is used in winter, the underbody must be cleaned regularly. This will prevent dirt and salt from building up and causing the acceleration of corrosion on the underbody and suspension. Before the winter period and again in the spring, the underseal must be checked and, if necessary, re-treated.

GLASS

Use glass cleaner to remove smoke and dust film from the glass surfaces. It is normal for glass to become coated with a film after the vehicle is parked in the hot sun. Glass cleaner and a soft cloth will easily remove this film.

CAUTION

When cleaning the inside of the windows, do not use sharp-edged tools, abrasive cleaners or chlorine-based disinfectant cleaners. They could damage the electrical conductors, radio antenna elements or rear window defroster elements.

WHEELS

Wash the wheels when washing the vehicle to maintain their appearance.

- Clean the inner side of the wheels when the wheel is changed or the underside of the vehicle is washed.
- Inspect wheel rims regularly for dents or corrosion. Such damage may cause loss of pressure or poor seal at the tire bead.
- NISSAN recommends that the road wheels be waxed to protect against road salt in areas where it is used during winter.

CAUTION

Do not use abrasive cleaners when washing the wheels.

Aluminum alloy wheels

Wash regularly with a sponge dampened in a mild soap solution, especially during winter months in areas where road salt is used. Salt could discolor the wheels if not removed.

CAUTION

Follow the directions below to avoid staining or discoloring the wheels:

- **Do not use a cleaner that uses strong acid or alkali contents to clean the wheels.**
- **Do not apply wheel cleaners to the wheels when they are hot. The wheel temperature should be the same as ambient temperature.**
- **Rinse the wheel to completely remove the cleaner within 15 minutes after the cleaner is applied.**

Wheels for Krōm models

The wheels on Krōm models use a different coating process than typical aluminum alloy wheels. These wheels require special cleaning.

CAUTION

- **The surfaces of the wheels use a different coating process than typical aluminum alloy wheels. Do not use aluminum alloy wheel cleaners or abrasive cleaners to clean the wheels. Using such cleaners could damage the wheel surfaces.**
- **Do not use an automatic car wash for Krōm models. The wheel coating may be damaged.**
- **Do not use a brush to wash the wheels on Krōm models. The wheel coating may be damaged.**

CHROME PARTS

Clean chrome parts regularly with a non-abrasive chrome polish to maintain the finish.

TIRE DRESSING

NISSAN does not recommend the use of tire dressings. Tire manufacturers apply a coating to the tires to help reduce discoloration of the rubber. If a tire dressing is applied to the tires, it may react with the coating and form a compound. This compound may come off the tire while driving and stain the vehicle paint.

If you choose to use a tire dressing, take the following precautions:

- Use a water-based tire dressing. The coating on the tire dissolves more easily with an oil-based tire dressing.
- Apply a light coat of tire dressing to help prevent it from entering the tire tread/grooves (where it would be difficult to remove).
- Wipe off excess tire dressing using a dry towel. Make sure the tire dressing is completely removed from the tire tread/grooves.
- Allow the tire dressing to dry as recommended by tire dressing manufacturer.

CLEANING INTERIOR

Occasionally remove loose dust from the interior trim, plastic parts and seats using a vacuum cleaner or soft bristled brush. Wipe the vinyl and leather surfaces with a clean, soft cloth dampened in mild soap solution, then wipe clean with a dry soft cloth.

Regular care and cleaning is required in order to maintain the appearance of the leather.

Before using any fabric protector, read the manufacturer's recommendations. Some fabric protectors contain chemicals that may stain or bleach the seat material.

Use a cloth dampened only with water, to clean the meter and gauge lens.

WARNING

Do not use water or acidic cleaners (hot steam cleaners) on the seat. This can damage the seat or occupant classification sensors. This can also affect the operation of the air bag system and result in serious personal injury.

CAUTION

- **Never use benzine, thinner, or any similar material.**
- **Small dirt particles can be abrasive and damaging to the leather surfaces and should be removed promptly. Do not use saddle soap, car waxes, polishes, oils, cleaning fluids, solvents, detergents or ammonia-based cleaners as they may damage the leather's natural finish.**
- **Never use fabric protectors unless recommended by the manufacturer.**
- **Do not use glass or plastic cleaner on meter or gauge lens covers. It may damage the lens cover.**

AIR FRESHENERS

Most air fresheners use a solvent that could affect the vehicle interior. If you use an air freshener, take the following precautions:

- Hanging-type air fresheners can cause permanent discoloration when they contact vehicle interior surfaces. Place the air freshener in a location that allows it to hang free and not contact an interior surface.
- Liquid-type air fresheners typically clip on the vents. These products can cause immediate damage and discoloration when spilled on interior surfaces.

Carefully read and follow the manufacturer's instructions before using air fresheners.

FLOOR MATS

The use of genuine NISSAN floor mats can extend the life of your vehicle carpet and make it easier to clean the interior. **No matter what mats are used, be sure they are fitted for your vehicle and are properly positioned in the footwell to prevent interference with pedal operation.** Mats should be maintained with regular cleaning and replaced if they become excessively worn.

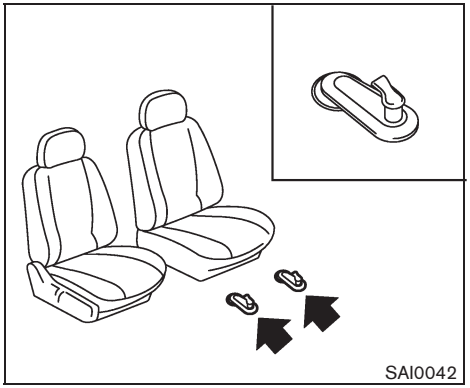

Floor mat positioning aid (driver's side only)

This vehicle includes front floor mat brackets to act as floor mat positioning aid. NISSAN floor mats have been specially designed for your vehicle model. The driver's side floor mat has grommet holes in it. To install, position the mat by placing the floor mat bracket hook through the floor mat grommet hole while centering the mat in the foot area.

Periodically check to make certain that the mats are properly positioned.

SEAT BELTS

The seat belts can be cleaned by wiping them with a sponge dampened in a mild soap solution. Allow the belts to dry completely in the shade before using them.

See "SEAT BELTS" in the "1. Safety — Seats, seat belts and supplemental restraint system" section.

WARNING

Do not allow wet seat belts to roll up in the retractor. NEVER use bleach, dye, or chemical solvents to clean the seat belts, since these materials may severely weaken the seat belt webbing.

CORROSION PROTECTION

MOST COMMON FACTORS CONTRIBUTING TO VEHICLE CORROSION

- The accumulation of moisture-retaining dirt and debris in body panel sections, cavities, and other areas.
- Damage to paint and other protective coatings caused by gravel and stone chips or minor traffic accidents.

ENVIRONMENTAL FACTORS INFLUENCE THE RATE OF CORROSION

Moisture

Accumulation of sand, dirt and water on the vehicle body underside can accelerate corrosion. Wet floor coverings will not dry completely inside the vehicle, and should be removed for drying to avoid floor panel corrosion.

Relative humidity

Corrosion will be accelerated in areas of high relative humidity, especially those areas where the temperatures stay above freezing where atmospheric pollution exists, or where road salt is used.

Temperature

A temperature increase will accelerate the rate of corrosion to those parts which are not well ventilated.

Air pollution

Industrial pollution, the presence of salt in the air in coastal areas, or heavy road salt use will accelerate the corrosion process. Road salt will also accelerate the disintegration of paint surfaces.

TO PROTECT YOUR VEHICLE FROM CORROSION

- Wash and wax your vehicle often to keep the vehicle clean.
- Always check for minor damage to the paint and repair it as soon as possible.
- Keep drain holes at the bottom of the doors open to avoid water accumulation.
- Check the underbody for accumulation of sand, dirt or salt. If present, wash with water as soon as possible.

CAUTION

- **NEVER remove dirt, sand or other debris from the passenger compartment by washing it out with a hose. Remove dirt with a vacuum cleaner.**
- **Never allow water or other liquids to come in contact with electronic components inside the vehicle as this may damage them.**

Chemicals used for road surface deicing are extremely corrosive. They accelerate corrosion and deterioration of underbody components such as the exhaust system, fuel and brake lines, brake cables, floor pan and fenders.

In winter, the underbody must be cleaned periodically.

For additional protection against rust and corrosion, which may be required in some areas, consult a NISSAN dealer.

MEMO

8 Maintenance and do-it-yourself

Maintenance requirement 8-2
Scheduled maintenance..... 8-2
General maintenance 8-2
Where to go for service..... 8-2
General maintenance 8-2
Explanation of maintenance items..... 8-2
Maintenance precautions 8-5
Engine compartment check locations..... 8-6
MR18DE engine 8-6
Engine cooling system..... 8-7
Checking engine coolant level..... 8-8
Changing engine coolant 8-8
Engine oil..... 8-8
Checking engine oil level 8-8
Changing engine oil and filter..... 8-9
Continuously Variable Transmission (CVT) fluid..... 8-11
Brake and clutch fluid 8-11
Window washer fluid 8-12
Battery 8-13
Jump starting 8-14
Variable voltage control system (if so equipped) 8-14
Drive belt 8-15
Spark plugs 8-15
Replacing spark plugs..... 8-16
Air cleaner..... 8-16
Windshield wiper blades..... 8-17
Cleaning 8-17
Replacing..... 8-17
Rear window wiper blade..... 8-18
Brakes..... 8-18
Self-adjusting brakes 8-18
Brake pad wear warning 8-18
Fuses..... 8-19
Engine compartment..... 8-19
Passenger compartment 8-21
Key battery replacement 8-22
Keyfob..... 8-22
Intelligent Key..... 8-23
Lights..... 8-25
Headlights..... 8-26
Exterior and interior lights..... 8-27
Wheels and tires..... 8-28
Tire pressure..... 8-28
Tire labeling..... 8-31
Types of tires 8-33
Tire chains..... 8-34
Changing wheels and tires 8-35

MAINTENANCE REQUIREMENT

Your new NISSAN has been designed to have minimum maintenance requirements with long service intervals to save you both time and money. However, some day-to-day and regular maintenance is essential to maintain your NISSAN's fine mechanical condition, as well as its emission and engine performance.

It is the owner's responsibility to make sure that the scheduled maintenance, as well as general maintenance, is performed.

As the vehicle owner, you are the only one who can ensure that your vehicle receives the proper maintenance care. You are a vital link in the maintenance chain.

SCHEDULED MAINTENANCE

For your convenience, both required and optional scheduled maintenance items are described and listed in your "NISSAN Service and Maintenance Guide". You must refer to that guide to ensure that necessary maintenance is performed on your NISSAN at regular intervals.

GENERAL MAINTENANCE

General maintenance includes those items which should be checked during normal day-to-day operation. They are essential for proper vehicle operation. It is your responsibility to perform these procedures regularly as prescribed.

Performing general maintenance checks requires minimal mechanical skill and only a few general automotive tools.

These checks or inspections can be done by yourself, a qualified technician or, if you prefer, a NISSAN dealer.

WHERE TO GO FOR SERVICE

If maintenance service is required or your vehicle appears to malfunction, have the systems checked and serviced by a NISSAN dealer.

NISSAN technicians are well-trained specialists and are kept up-to-date with the latest service information through technical bulletins, service tips, and in-dealership information systems. They are completely qualified to work on NISSAN vehicles **before** work begins.

You can be confident that a NISSAN dealer's service department performs the best job to meet the maintenance requirements on your vehicle — in a reliable and economical way.

GENERAL MAINTENANCE

During the normal day-to-day operation of the vehicle, general maintenance should be performed regularly as prescribed in this section. If you detect any unusual sounds, vibrations or smell, be sure to check for the cause or have a NISSAN dealer do it promptly. In addition, you should notify a NISSAN dealer if you think that repairs are required.

When performing any checks or maintenance work, see "MAINTENANCE PRECAUTIONS" later in this section.

EXPLANATION OF MAINTENANCE ITEMS

Additional information on the following items with "*" is found later in this section.

Outside the vehicle

The maintenance items listed here should be performed from time to time, unless otherwise specified.

Doors and engine hood: Check that all doors and the engine hood operate properly. Also ensure that all latches lock securely. Lubricate hinges, latches, latch pins, rollers and links if necessary. Make sure that the secondary latch keeps the hood from opening when the primary latch is released.

When driving in areas using road salt or other corrosive materials, check lubrication frequently.

Lights*: Clean the headlights on a regular basis. Make sure that the headlights, stop lights, tail lights, turn signal lights, and other lights are all operating properly and installed securely. Also check headlight aim.

Road wheel nuts (lug nuts)*: When checking the tires, make sure no wheel nuts are missing, and check for any loose wheel nuts. Tighten if necessary.

Tire rotation*: Tires should be rotated every 7,500 miles (12,000 km).

Tires*: Check the pressure with a gauge often and always prior to long distance trips. If necessary, adjust the pressure in all tires, including the spare, to the pressure specified. Check carefully for damage, cuts or excessive wear.

Tire Pressure Monitoring System (TPMS) transmitter components: Replace the TPMS transmitter grommet seal, valve core and cap when the tires are replaced due to wear or age.

Wheel alignment and balance: If the vehicle should pull to either side while driving on a straight and level road, or if you detect uneven or abnormal tire wear, there may be a need for wheel alignment.

If the steering wheel or seat vibrates at normal highway speeds, wheel balancing may be needed.

For additional information regarding tires, refer to “Important Tire Safety Information” (US) or “Tire Safety Information” (Canada) in the Warranty Information Booklet.

Windshield: Clean the windshield on a regular basis. Check the windshield at least every six months for cracks or other damage. Have a damaged windshield repaired by a qualified repair facility.

Windshield wiper blades*: Check for cracks or wear if they do not wipe properly.

Inside the vehicle

The maintenance items listed here should be checked on a regular basis, such as when performing scheduled maintenance, cleaning the vehicle, etc.

Accelerator pedal: Check the pedal for smooth operation and make sure the pedal does not catch or require uneven effort. Keep the floor mat away from the pedal.

Brake pedal: Check the pedal for smooth operation. If the brake pedal suddenly goes down further than normal, the pedal feels spongy or the vehicle seems to take longer to stop, see a NISSAN dealer immediately. Keep the floor mat away from the pedal.

Brakes: Check that the brakes do not pull the vehicle to one side when applied.

Continuously Variable Transmission (CVT) P (Park) position mechanism: On a fairly steep hill, check that the vehicle is held securely with the selector lever in the P (Park) position without applying any brakes.

Parking brake: Check the parking brake operation regularly. The vehicle should be securely held on a fairly steep hill with only the parking brake applied. If the parking brake needs adjusted, see a NISSAN dealer.

Seat belts: Check that all parts of the seat belt system (for example, buckles, anchors, adjusters and retractors) operate properly and smoothly, and are installed securely. Check the belt webbing for cuts, fraying, wear or damage.

Seats: Check seat position controls such as seat adjusters, seatback recliners, etc. to ensure they operate smoothly and that all latches lock securely in every position. Check that the head restraints move up and down smoothly and that the locks (if so equipped) hold securely in all latched positions.

Steering wheel: Check for changes in the steering conditions, such as excessive free play, hard steering or strange noises.

Warning lights and chimes: Make sure that all warning lights and chimes are operating properly.

Windshield defroster: Check that the air comes out of the defroster outlets properly and in sufficient quantity when operating the heater or air conditioner.

Windshield wiper and washer*: Check that the wipers and washers operate properly and that the wipers do not streak.

Under the hood and vehicle

The maintenance items listed here should be checked periodically (for example, each time you check the engine oil or refuel).

Battery*: Check the fluid level in each cell. It should be between the MAX and MIN lines. Vehicles operated in high temperatures or under severe condition require frequent checks of the battery fluid level.

Brake and clutch fluid level*: Make sure that the brake and clutch fluid level is between the MAX and MIN lines on the reservoir.

Engine coolant level*: Check the coolant level when the engine is cold.

Engine drive belt*: Make sure that the drive belt is not frayed, worn, cracked or oily.

Engine oil level*: Check the level after parking the vehicle on a level surface and turning off the engine. Wait more than 10 minutes for the oil to drain back into the oil pan.

Exhaust system: Make sure there are no loose supports, cracks or holes. If the sound of the exhaust seems unusual or there is a smell of exhaust fumes, immediately have the exhaust system inspected by a NISSAN dealer. (See "PRECAUTIONS WHEN STARTING AND DRIVING" in the "5. Starting and driving" section for exhaust gas (carbon monoxide).)

Fluid leaks: Check under the vehicle for fuel, oil, water or other fluid leaks after the vehicle has been parked for a while. Water dripping from the air conditioner after use is normal. If you should notice any leaks or if gasoline fumes are evident, check for the cause and have it corrected immediately.

Radiator and hoses: Check the front of the radiator and clean off any dirt, insects, leaves, etc., that may have accumulated. Make sure the hoses have no cracks, deformation, rot or loose connections.

Underbody: The underbody is frequently exposed to corrosive substances such as those used on icy roads or to control dust. It is very important to remove these substances, otherwise rust will form on the floor pan, frame, fuel lines and around the exhaust system. At the end of winter, the underbody should be thoroughly flushed with plain water, being careful to clean those areas where mud and dirt may accumulate. For additional information, see "CLEANING EXTERIOR" in the "7. Appearance and care" section.

Windshield washer fluid*: Check that there is adequate fluid in the reservoir.

MAINTENANCE PRECAUTIONS

When performing any inspection or maintenance work on your vehicle, always take care to prevent serious accidental injury to yourself or damage to the vehicle. The following are general precautions which should be closely observed.

WARNING

- **Park the vehicle on a level surface, apply the parking brake securely and block the wheels to prevent the vehicle from moving. Move the selector lever to the P (Park) position or the shift lever to the N (Neutral) position.**
- **Be sure the ignition switch is in the OFF or LOCK position when performing any parts replacement or repairs.**
- **If you must work with the engine running, keep your hands, clothing, hair and tools away from moving fans, belts and any other moving parts.**
- **It is advisable to secure or remove any loose clothing and remove any jewelry, such as rings, watches, etc. before working on your vehicle.**
- **Always wear eye protection whenever you work on your vehicle.**
- **If you must run the engine in an enclosed space such as a garage, be sure there is proper ventilation for exhaust gases to escape.**
- **Never get under the vehicle while it is supported only by a jack. If it is necessary to work under the vehicle, support it with safety stands.**
- **Keep smoking materials, flame and sparks away from fuel tank and the battery.**
- **The fuel filter or fuel lines should be serviced by a NISSAN dealer because the fuel lines are under high pressure even when the engine is off.**

CAUTION

- **Do not work under the hood while the engine is hot. Turn the engine off and wait until it cools down.**
- **Avoid direct contact with used engine oil and coolant. Improperly disposed engine oil, and engine coolant and/or other vehicle fluids can damage the environment. Always conform to local regulations for disposal of vehicle fluid.**
- **Never leave the engine or the CVT related component harnesses disconnected while the ignition switch is in the ON position.**
- **Never connect or disconnect the battery or any transistorized component while the ignition switch is in the ON position.**
- **Your vehicle is equipped with an automatic engine cooling fan. It may come on at any time without warning, even if the ignition key is in the OFF position and the engine is not running. To avoid injury, always disconnect the negative battery cable before working near the fan.**

This “8. Maintenance and do-it-yourself” section gives instructions regarding only those items which are relatively easy for an owner to perform.

A genuine NISSAN Service Manual is also available. (See “OWNER’S MANUAL/SERVICE MANUAL ORDER INFORMATION” in the “9. Technical and consumer information” section.)

You should be aware that incomplete or improper servicing may result in operating

difficulties or excessive emissions, and could affect your warranty coverage. **If in doubt about any servicing, we recommend that it be done by a NISSAN dealer.**

ENGINE COMPARTMENT CHECK LOCATIONS

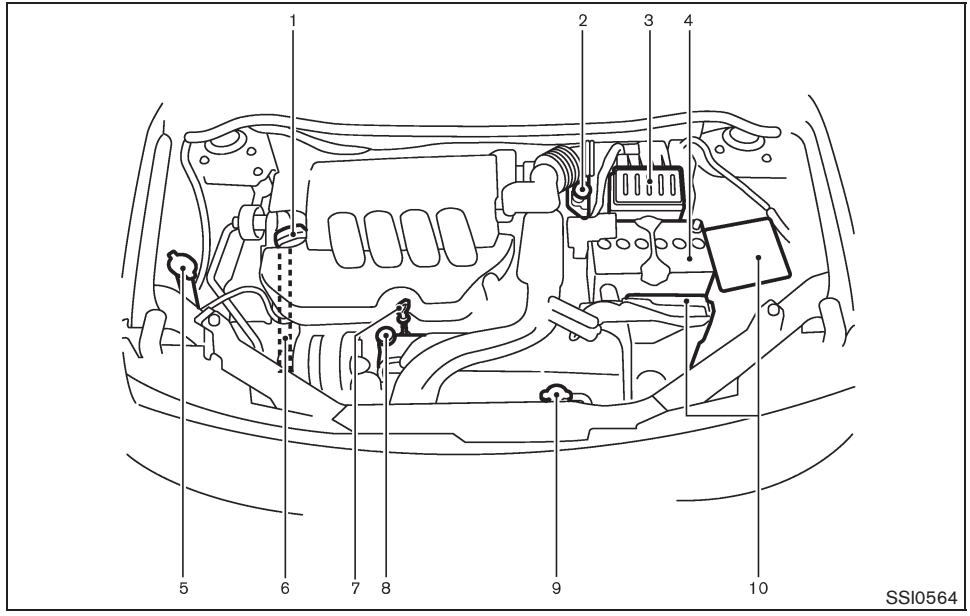

MR18DE ENGINE

1. Engine oil filler cap
2. Brake and clutch (*1) fluid reservoir
3. Air cleaner
4. Battery
5. Window washer fluid reservoir
6. Engine drive belt location
7. Engine oil dipstick
8. Engine coolant reservoir
9. Radiator filler cap
10. Fuse/fusible link holder

*1: for Manual Transmission (MT) models

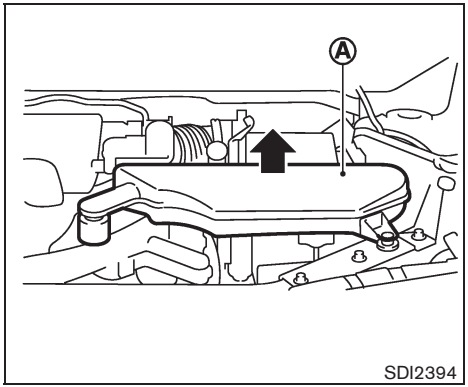

Removing the resonator

Remove the resonator (A) if necessary. Pull the resonator upward to remove it. Install the resonator securely after any inspection or maintenance work is performed.

The engine cooling system is filled at the factory with a high-quality, year-round, anti-freeze coolant solution. The anti-freeze solution contains rust and corrosion inhibitors, therefore additional cooling system additives are not necessary.

WARNING

- **Never remove the radiator or coolant reservoir cap when the engine is hot. Wait until the engine and radiator cool down. Serious burns could be caused by high pressure fluid escaping from the radiator. See precautions in "IF YOUR VEHICLE OVERHEATS" in the "6. In case of emergency" section of this manual.**
- **The radiator is equipped with a pressure type radiator cap. To prevent engine damage, use only a genuine NISSAN radiator cap.**

CAUTION

When adding or replacing coolant, be sure to use only a Genuine NISSAN Long Life Antifreeze/Coolant (green) or equivalent with the proper mixture ratio of 50% anti-freeze and 50% demineralized or distilled water. The use of other types of coolant solutions may damage the engine cooling system.

Outside temperature down to		Anti-freeze	Demineralized water or distilled water
°F	°C		
−30	−35	50%	50%

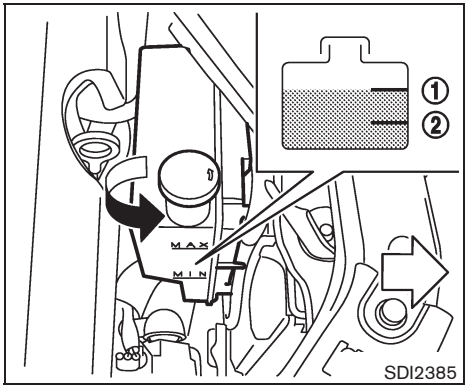

CHECKING ENGINE COOLANT LEVEL

Check the coolant level **in the reservoir when the engine is cold.** If the coolant level is below the MIN level ②, open the reservoir cap and add coolant up to the MAX level ①. If the reservoir is empty, check the coolant level in the radiator **when the engine is cold.** If there is insufficient coolant in the radiator, fill the radiator with coolant up to the filler opening and also add it to the reservoir up to the MAX level ①.

Tighten the cap securely after adding engine coolant.

If the cooling system frequently requires coolant, have it checked by a NISSAN dealer.

CHANGING ENGINE COOLANT

Major cooling system repairs should be performed by a NISSAN dealer. The service procedures can be found in the appropriate NISSAN Service Manual.

Improper servicing can result in reduced heater performance and engine overheating.

⚠ WARNING

- **To avoid the danger of being scalded, never change the coolant when the engine is hot.**
- **Never remove the radiator cap when the engine is hot. Serious burns could be caused by high pressure fluid escaping from the radiator.**
- **Avoid direct skin contact with used coolant. If skin contact is made, wash thoroughly with soap or hand cleaner as soon as possible.**
- **Keep coolant out of reach of children and pets.**

Engine coolant must be disposed of properly. Check your local regulations.

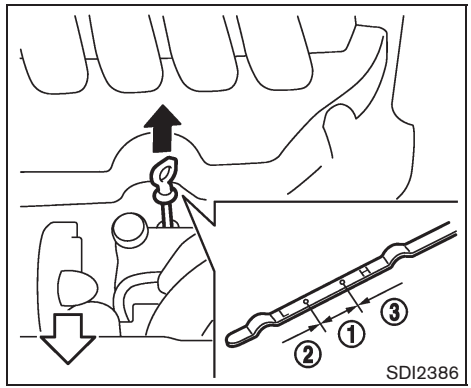

CHECKING ENGINE OIL LEVEL

1. Park the vehicle on a level surface and apply the parking brake.
2. Run the engine until it reaches operating temperature.
3. Turn off the engine. **Wait more than 10 minutes for the oil to drain back into the oil pan.**
4. Remove the dipstick and wipe it clean. Reinsert it all the way.
5. Remove the dipstick again and check the oil level. It should be within the range ①. If the oil level is below ②, remove the oil filler cap

and pour recommended oil through the opening. **Do not overfill ③.**

6. Recheck oil level with the dipstick.

It is normal to add some oil between oil maintenance intervals or during the break-in period, depending on the severity of operating conditions.

CAUTION

Oil level should be checked regularly. Operating the engine with an insufficient amount of oil can damage the engine, and such damage is not covered by the warranty.

CHANGING ENGINE OIL AND FILTER

Change the engine oil and filter according to the maintenance log shown in the NISSAN Service and Maintenance Guide.

Vehicle set-up

1. Park the vehicle on a level surface and apply the parking brake.
2. Run the engine until it reaches the operating temperature.
3. Turn the engine off and wait more than 10 minutes.
4. Raise and support the vehicle using a suitable floor jack and safety jack stands.
   - Place the safety jack stands under the vehicle jack-up points.
   - A suitable adapter should be attached to the jack stand saddle.

CAUTION

Make sure the correct lifting and support points are used to avoid vehicle damage.

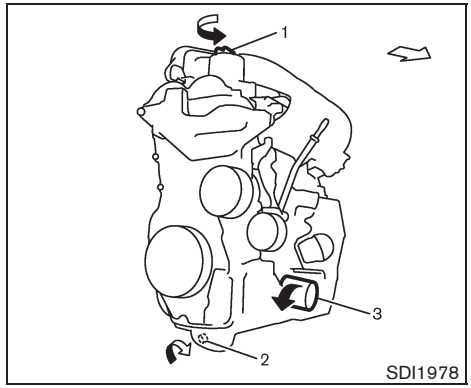

1. Oil filler cap
2. Oil drain plug
3. Oil filter

Engine oil and filter

1. Place a large drain pan under the drain plug.
2. Remove the oil filler cap.
3. Remove the drain plug with a wrench and completely drain the oil.

CAUTION

Be careful not to burn yourself, as the engine oil is hot.

- **Waste oil must be disposed of properly.**
- **Check your local regulations.**

(Perform steps 4 to 8 only when the engine oil filter change is needed.)

4. Remove the engine under cover under the oil filter location by removing the bolts and small plastic clips.
5. Loosen the oil filter with an oil filter wrench. Remove the oil filter by turning it by hand.
6. Wipe the engine oil filter mounting surface with a clean rag.

CAUTION

Be sure to remove any old gasket material remaining on the mounting surface of the engine. Failure to do so could lead to engine damage.

7. Coat the gasket on the new filter with clean engine oil.
8. Screw in the oil filter clockwise until a slight resistance is felt, then tighten additionally more than 2/3 turn.
   Oil filter tightening torque:
   11 to 15 ft-lb
   (14.7 to 20.5 N·m)
9. Clean and re-install the drain plug with a new washer. Securely tighten the drain plug with a wrench.
   Drain plug tightening torque:
   22 to 29 ft-lb
   (29 to 39 N·m)

   Do not use excessive force.
10. Refill the engine with the recommended oil through the oil filler opening, and install the oil filler cap securely.

    See “CAPACITIES AND RECOMMENDED FUEL/LUBRICANTS” in the “9. Technical and consumer information” section for drain and refill capacity. The drain and refill capacity depends on the oil temperature and drain time. Use these specifications for reference only. Always use the dipstick to determine the proper amount of oil in the engine.
11. Start the engine and check for leakage around the drain plug and the oil filter. Correct as required.
12. Turn the engine off and wait more than 10 minutes. Check the oil level with the dipstick. Add engine oil if necessary.

After the operation

1. Install the engine undercover into position as the following steps.
   a. Pull the center of the small plastic clips out.
   b. Hold the engine undercover into position.
   c. Insert the clips through the undercover into the holes in the frame, then push the center of the clips in to lock the clips in place.
   d. Install the bolts that hold the undercover in place. Be careful not to strip the bolts or over-tighten them.
2. Lower the vehicle carefully to the ground.
3. Dispose of waste oil and filter properly.

WARNING

- **Prolonged and repeated contact with used engine oil may cause skin cancer.**
- **Try to avoid direct skin contact with used oil. If skin contact is made, wash thoroughly with soap or hand cleaner as soon as possible.**
- **Keep used engine oil out of reach of children.**

CONTINUOUSLY VARIABLE TRANSMISSION (CVT) FLUID

When checking or replacement is required, we recommend a NISSAN dealer for servicing.

CAUTION

- **Use only Genuine NISSAN CVT Fluid NS-2. Do not mix with other fluids.**
- **Using transmission fluid other than Genuine NISSAN CVT Fluid NS-2 will damage the CVT, which is not covered by the NISSAN new vehicle limited warranty.**

BRAKE AND CLUTCH FLUID

For additional brake and clutch fluid information, see “CAPACITIES AND RECOMMENDED FUEL/LUBRICANTS” in the “9. Technical and consumer information” section of this manual.

WARNING

- **Use only new fluid from a sealed container. Old, inferior or contaminated fluid may damage the brake and clutch systems. The use of improper fluids can damage the brake and clutch systems, and affect the vehicle’s stopping ability.**
- **Clean the filler cap before removing.**
- **Brake and clutch fluid is poisonous and should be stored carefully in marked containers out of the reach of children.**

CAUTION

Do not spill the fluid on any painted surfaces. This will damage the paint. If fluid is spilled, immediately wash the surface with water.

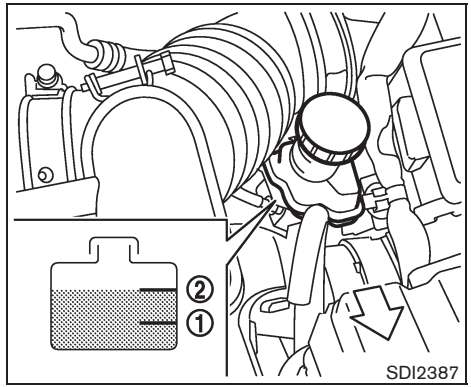

Check the fluid level in the reservoir. If the fluid is below the MIN line ① or the brake warning light comes on, add Genuine NISSAN Super Heavy Duty Brake Fluid or equivalent **DOT 3** fluid up to the MAX line ②. If fluid must be added frequently, the system should be checked by a NISSAN dealer.

WINDOW WASHER FLUID

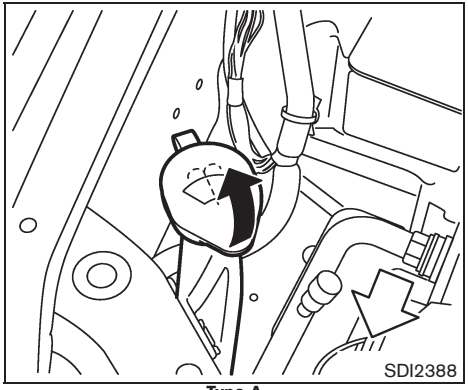

Type A

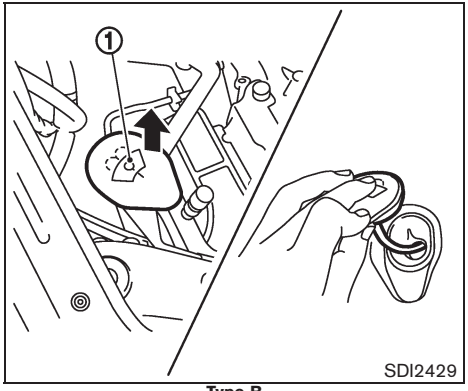

Type B

To fill the window washer fluid reservoir, lift the cap and pour the window washer fluid into the reservoir opening.

Add a washer solvent to the washer for better cleaning. In the winter season, add a windshield washer antifreeze. Follow the manufacturer's instructions for the mixture ratio.

Fill the window washer fluid reservoir periodically.

Type A

Add fluid when the low washer fluid warning light illuminates.

Type B

To check the fluid level, use your finger to plug the center hole ① of the cap/tube assembly, then remove it from the reservoir. If there is no fluid in the tube, add fluid.

Refill the reservoir more frequently when driving conditions require an increased amount of window washer fluid.

Recommended fluid:
Genuine NISSAN Windshield Washer Concentrate Cleaner & Antifreeze or equivalent

⚠ CAUTION

- **Do not substitute engine anti-freeze coolant for window washer solution. This may result in damage to the paint.**
- **Do not fill the window washer reservoir tank with washer fluid concentrates at full strength. Some methyl alcohol based washer fluid concentrates may permanently stain the grille if spilled while filling the window washer reservoir tank.**
- **Pre-mix washer fluid concentrates with water to the manufacturer's recommended levels before pouring the fluid into the window washer reservoir tank. Do not use the window washer reservoir tank to mix the washer fluid concentrate and water.**

BATTERY

- Keep the battery surface clean and dry. Clean the battery with a solution of baking soda and water.
- Make certain the terminal connections are clean and securely tightened.
- If the vehicle is not to be used for 30 days or longer, disconnect the negative ⊖ battery terminal cable to prevent discharging it.

⚠ WARNING

- **Do not expose the battery to flames or electrical sparks. Hydrogen gas generated by the battery is explosive. Do not allow battery fluid to contact your skin, eyes, fabrics or painted surfaces. After touching a battery or battery cap, do not touch or rub your eyes. Thoroughly wash your hands. If the acid contacts your eyes, skin or clothing, immediately flush with water for at least 15 minutes and seek medical attention.**
- **Do not operate the vehicle if the fluid in the battery is low. Low battery fluid can cause a higher load on the battery which can generate heat, reduce battery life, and in some cases lead to an explosion.**
- **When working on or near a battery, always wear suitable eye protection and remove all jewelry.**
- **Battery posts, terminals and related accessories contain lead and lead compounds. Wash hands after handling.**
- **Keep the battery out of the reach of children.**

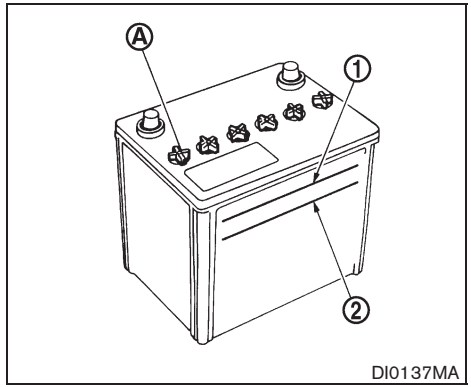

Check the fluid level in each cell. It should be between the UPPER LEVEL ① and LOWER LEVEL ② lines.

If it is necessary to add fluid, add only distilled water to bring the level to the indicator in each filler opening. **Do not overfill.**

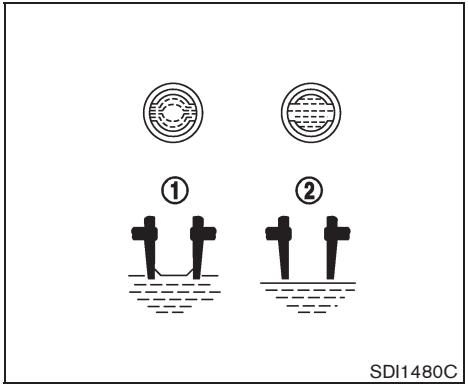

1. Remove the cell plugs Ⓐ .
2. Add distilled water up to the UPPER LEVEL ① line.

   If the side of the battery is not clear, check the distilled water level by looking directly above the cell; the condition ① indicates OK and the condition ② needs more to be added.
3. Tighten cell plugs Ⓐ .

Vehicles operated in high temperatures or under severe conditions require frequent checks of the battery fluid level.

JUMP STARTING

If jump starting is necessary, see “JUMP STARTING” in the “6. In case of emergency” section. If the engine does not start by jump starting, the battery may have to be replaced. Contact a NISSAN dealer.

VARIABLE VOLTAGE CONTROL SYSTEM (if so equipped)

CAUTION

- **Do not ground accessories directly to the battery terminal. Doing so will bypass the variable voltage control system and the vehicle battery may not charge completely.**
- **Use electrical accessories with the engine running to avoid discharging the vehicle battery.**

The variable voltage control system measures the amount of electrical discharge from the battery and controls voltage generated by the generator.

DRIVE BELT

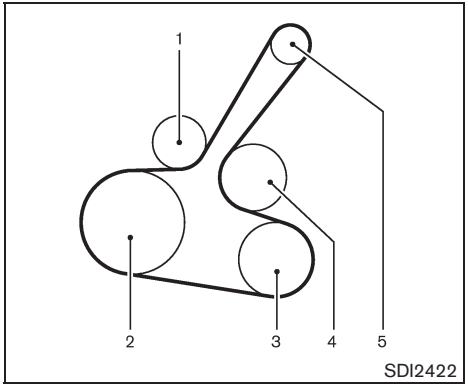

1. Drive belt auto-tensioner
2. Crankshaft pulley
3. Air conditioner compressor
4. Water pump
5. Alternator

WARNING

Be sure the ignition switch is in the OFF or LOCK position before servicing drive belts. The engine could rotate unexpectedly.

1. Visually inspect the belt for signs of unusual wear, cuts, fraying or looseness. If the belt is in poor condition or loose, have it replaced or adjusted by a NISSAN dealer.
2. Have the belt condition checked regularly.

SPARK PLUGS

WARNING

Be sure the engine and ignition switch are off and that the parking brake is engaged securely.

CAUTION

Be sure to use the correct socket to remove the spark plugs. An incorrect socket can damage the spark plugs.

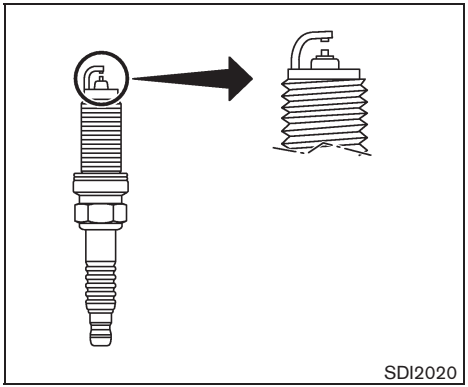

REPLACING SPARK PLUGS

If replacement is required, see a NISSAN dealer for servicing.

Iridium-tipped spark plugs

It is not necessary to replace the iridium-tipped spark plugs as frequently as the conventional type spark plugs since they will last much longer. Follow the maintenance log shown in the "NISSAN Service and Maintenance Guide". Do not reuse the iridium-tipped spark plugs by cleaning or regapping.

Always replace spark plugs with recommended or equivalent ones.

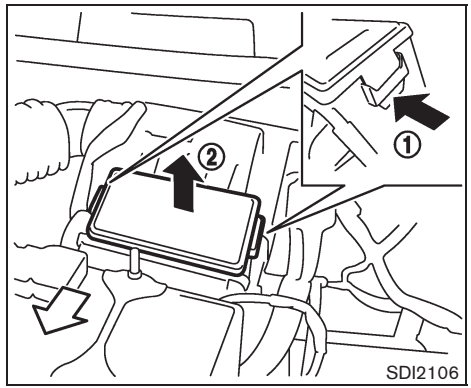

To remove the air cleaner filter, push the tabs ① and pull the filter upward ②.

The air cleaner filter should not be cleaned and reused. Replace it according to the maintenance shown in the "NISSAN Service and Maintenance Guide". When replacing the filter, wipe the inside of the air cleaner housing and the cover with a damp cloth.

WARNING

- **Operating the engine with the air cleaner removed can cause you or others to be burned. The air cleaner not only cleans the air, it stops flame if the engine backfires. If it is not there, and the engine backfires, you could be burned. Do not drive with the air cleaner removed, and be careful when working on the engine with the air cleaner removed.**
- **Never pour fuel into the throttle body or attempt to start the engine with the air cleaner removed. Doing so could result in serious injury.**

WINDSHIELD WIPER BLADES

CLEANING

If your windshield is not clear after using the windshield washer or if a wiper blade chatters when running, wax or other material may be on the blade or windshield.

Clean the outside of the windshield with a washer solution or a mild detergent. Your windshield is clean if beads do not form when rinsing with clear water.

Clean each blade by wiping it with a cloth soaked in a washer solution or a mild detergent. Then rinse the blade with clear water. If your windshield is still not clear after cleaning the blades and using the wiper, replace the blades.

CAUTION

Worn windshield wiper blades can damage the windshield and impair driver vision.

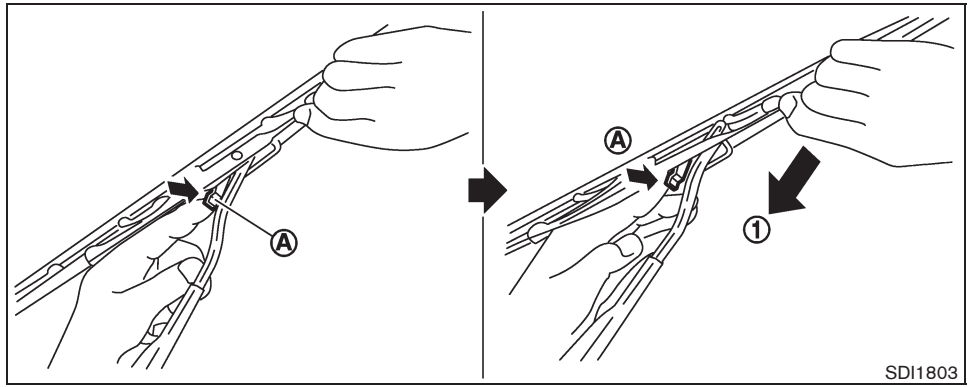

REPLACING

Replace the wiper blades if they are worn.

1. Lift the wiper arm away from the windshield.
2. Push and hold the release tab (A), and move the wiper blade down the wiper arm (1).
3. Insert the new wiper blade onto the wiper arm until a click sounds.
4. Rotate the wiper blade so that the dimple is in the groove.

CAUTION

- **After wiper blade replacement, return the wiper arm to its original position; otherwise it may be damaged when the hood is opened.**
- **Make sure the wiper blades contact the glass; otherwise the arm may be damaged from wind pressure.**

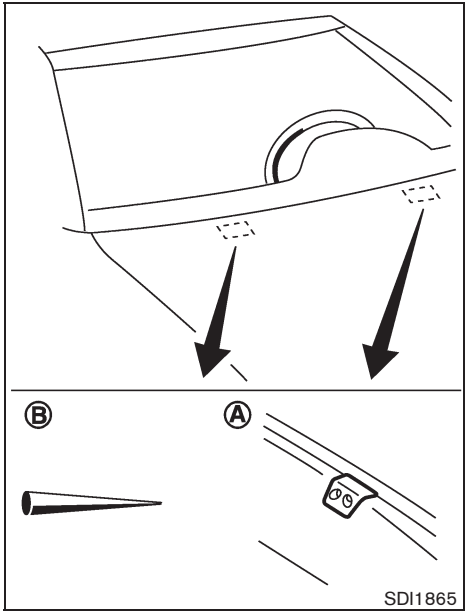

Be careful not to clog the washer nozzle Ⓐ . This may cause improper windshield washer operation. If the nozzle is clogged, remove any objects with a needle or small pin Ⓑ . Be careful not to damage the nozzle.

REAR WINDOW WIPER BLADE

Contact a NISSAN dealer if checking or replacement is required.

BRAKES

If the brakes do not operate properly, have the brakes checked by a NISSAN dealer.

SELF-ADJUSTING BRAKES

Your vehicle is equipped with self-adjusting brakes.

The disc-type brakes self-adjust every time the brake pedal is applied.

WARNING

See a NISSAN dealer for a brake system check if the brake pedal height does not return to normal.

BRAKE PAD WEAR WARNING

The disc brake pads have audible wear warnings. When a brake pad requires replacement, it will make a high pitched scraping sound when the vehicle is in motion. This scraping sound will first occur only when the brake pedal is depressed. After more wear of the brake pad, the sound will always be heard even if the brake pedal is not depressed. Have the brakes checked as soon as possible if the wear warning sound is heard.

Under some driving or climate conditions, occasional brake squeak, squeal or other noise may be heard. Occasional brake noise during light to moderate stops is normal and does not

affect the function or performance of the brake system.

Proper brake inspection intervals should be followed. For additional information, see the maintenance log section of your "NISSAN Service and Maintenance Guide".

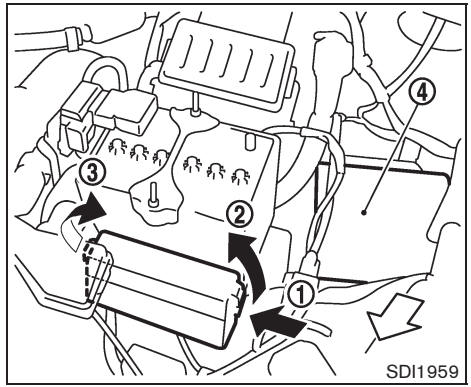

ENGINE COMPARTMENT

CAUTION

Never use a fuse of a higher or lower amperage rating than that specified on the fuse box cover. This could damage the electrical system or cause a fire.

If any electrical equipment does not operate, check for an open fuse.

1. Be sure the ignition switch and the headlight switch are turned off.
2. Open the engine hood.
3. Remove the resonator. (See "ENGINE COMPARTMENT CHECK LOCATIONS" earlier in this section.)
4. Remove the fuse/fusible link holder cover by pushing the tab ① and lifting the cover from the right side ②, then the left side ③.
5. Locate the fuse that needs to be replaced.
6. Remove the fuse using the fuse puller located in the passenger compartment fuse box.

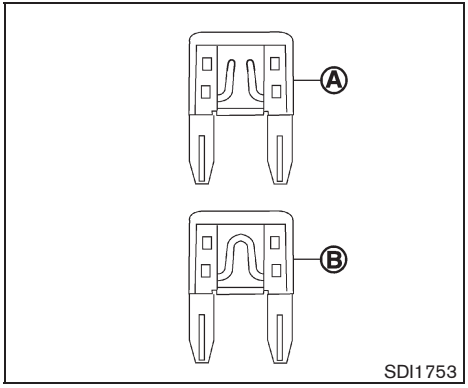

7. If the fuse is open Ⓐ , replace it with a new fuse Ⓑ .
8. If a new fuse also opens, have the electrical system checked and repaired by a NISSAN dealer.

   The holder ④ also contains the fuses. For checking and/or replacing, see a NISSAN dealer.

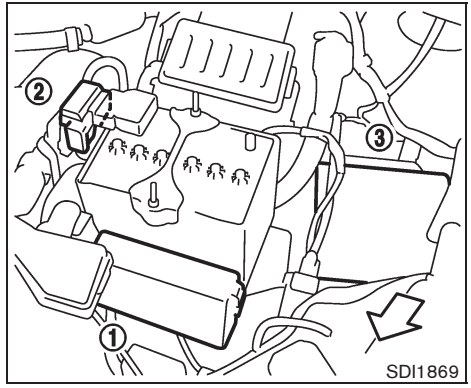

Fusible links

If any electrical equipment does not operate and the fuses are in good condition, check the fusible links in the holders ①, ② and ③. If any of these fusible links are melted, replace only with genuine NISSAN parts.

For checking and replacing the fusible links in the holders ② and ③, see a NISSAN dealer.

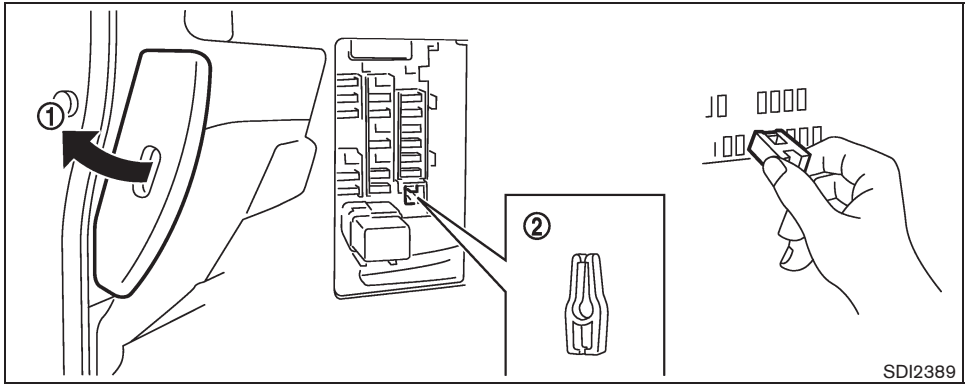

PASSENGER COMPARTMENT

CAUTION

Never use a fuse of a higher or lower amperage rating than that specified on the fuse box cover. This could damage the electrical system or cause a fire.

If any electrical equipment does not operate, check for an open fuse.

1. Be sure the ignition switch and the headlight switch are turned off.
2. Pull to remove the fuse box cover ①.
3. Remove the fuse with the fuse puller ②.

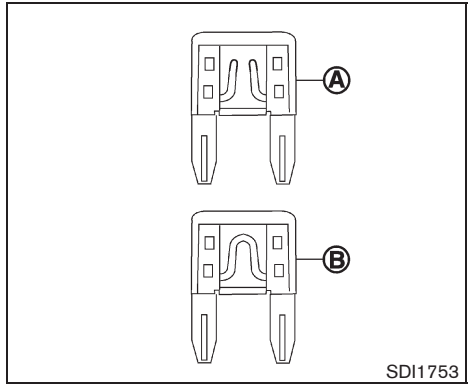

4. If the fuse is open Ⓐ, replace it with a new fuse Ⓑ.
5. If a new fuse also opens, have the electrical system checked and repaired by a NISSAN dealer.

CAUTION

Be careful not to allow children to swallow the battery and removed parts.

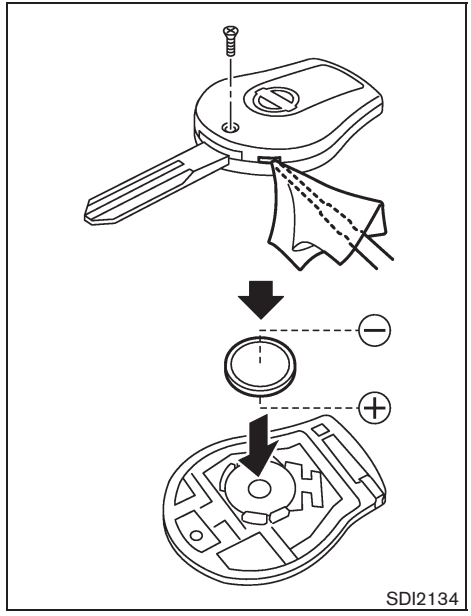

KEYFOB

Replace the battery in the keyfob as follows:

1. Remove the screw.
2. Insert a small screwdriver into the slit of the corner and twist it to separate the upper part from the lower part. Use a cloth to protect the casing.
3. Replace the battery with a new one.

   Recommended battery:

   CR1620 or equivalent

   - Do not touch the internal circuit and electric terminals as doing so could cause a malfunction.
   - Hold the battery by the edges. Holding the battery across the contact points will seriously deplete the storage capacity.
   - Make sure that the ⊕ side faces the bottom of the case.
4. Close the lid securely and install the screw.
5. Operate the buttons to check its operation.

See a NISSAN dealer if you need any assistance for replacement.

FCC Notice:

Changes or modifications not expressly approved by the party responsible for compliance could void the user's authority to operate the equipment.

This device complies with Part 15 of the FCC Rules and RSS-210 of Industry Canada.

Operation is subject to the following two conditions: (1) This device may not cause harmful interference, and (2) this device must accept any interference received, including interference that may cause undesired operation of the device.

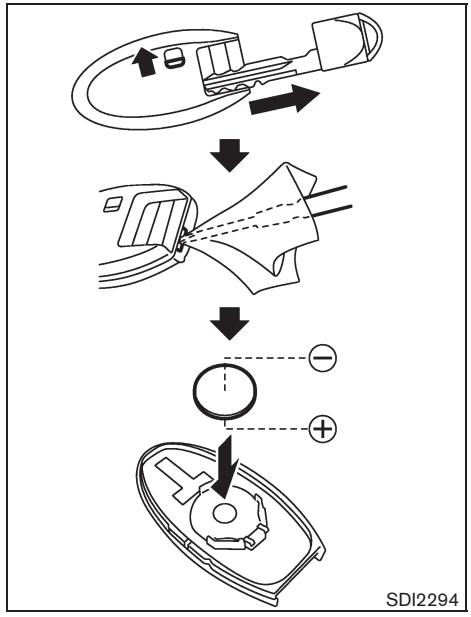

INTELLIGENT KEY

Replace the battery in the Intelligent Key as follows:

1. Remove the mechanical key from the Intelligent Key.
2. Insert a small screwdriver into the slit of the corner and twist it to separate the upper part from the lower part. Use a cloth to protect the casing.
3. Replace the battery with a new one.

   Recommended battery:

   CR2025 or equivalent

   - Do not touch the internal circuit and electric terminals as doing so could cause a malfunction.
   - Hold the battery by the edges. Holding the battery across the contact points will seriously deplete the storage capacity.
   - Make sure that the ⊕ side faces the bottom of the case.

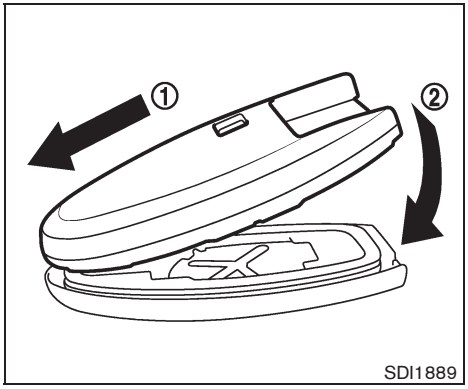

4. Align the tips of the upper and lower parts ①, and then push them together ② until it is securely closed.
5. Operate the buttons to check its operation.

See a NISSAN dealer if you need any assistance for replacement.

FCC Notice:

This equipment has been tested and found to comply with the limits for a Class B digital device pursuant to part 15 of the FCC Rules. These limits are designed to provide reasonable protection against harmful interference in a residential installation. This equipment generates, uses and can radiate radio frequency energy and, if not installed and used in accordance with the instructions, may cause harmful interference to radio communications. However, there is no guarantee that interference will not occur in a particular installation. If this equipment does cause harmful interference to radio or television reception, which can be determined by turning the equipment off and on, the user is encouraged to try to correct the interference by one or more of the following measures:

- **Reorient or relocate the receiving antenna.**
- **Increase the separation between the equipment and the receiver.**
- **Connect the equipment into an outlet on a circuit different from that to which the receiver is connected.**
- **Consult the dealer or an experienced radio/TV technician for help.**

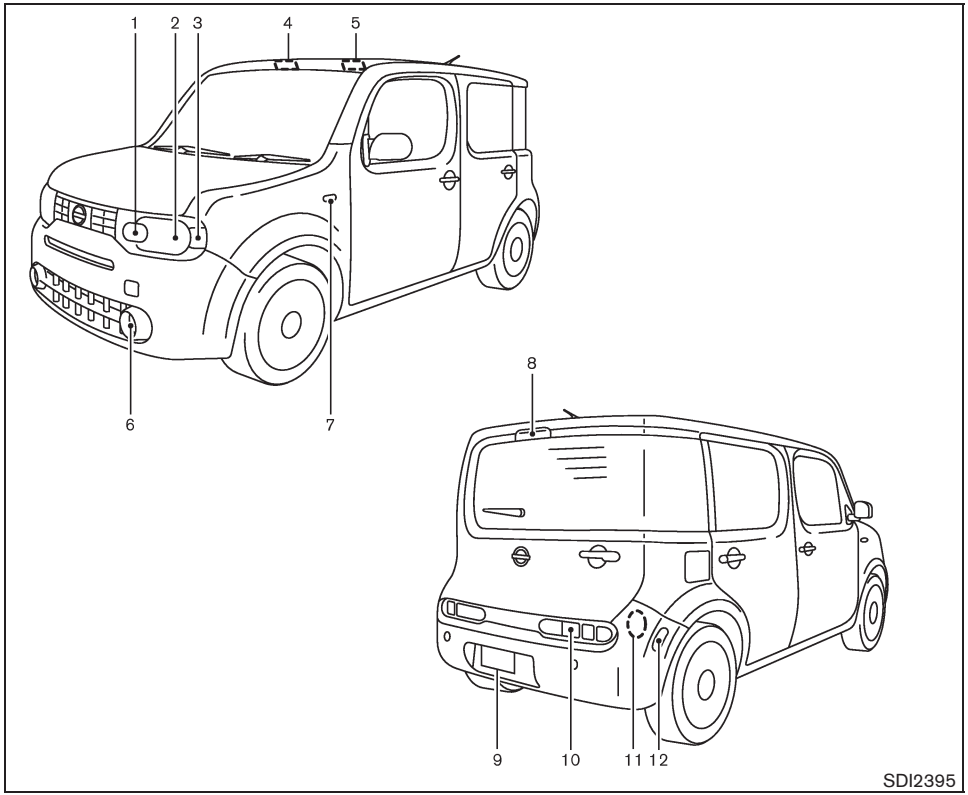

1. Front turn signal light
2. Headlight (high-beam/low-beam)
3. Front side marker/park light
4. Map light (if so equipped)
5. Ceiling light
6. Front fog light (if so equipped)
7. Side turn signal light
8. High-mounted stop light
9. License plate light
10. Rear combination light (stop/tail/turn signal/back-up light)
11. Cargo light (if so equipped)
12. Rear side marker light

HEADLIGHTS

Fog may temporarily form inside the lens of the exterior lights in the rain or in a car wash. A temperature difference between the inside and the outside of the lens causes the fog. This is not a malfunction. If large drops of water collect inside the lens, contact a NISSAN dealer.

Replacing

Halogen headlight model:

The headlight is a semi-sealed beam type which uses a replaceable headlight (halogen) bulb.

CAUTION

- **Do not leave the bulb out of the headlight reflector for a long period of time. Dust, moisture, smoke, etc. entering the headlight body may affect bulb performance.**
- **High pressure halogen gas is sealed inside the halogen bulb. The bulb may break if the glass envelope is scratched or the bulb is dropped.**
- **Only touch the base when handling the bulb. Never touch the glass envelope. Touching the glass envelope could significantly affect bulb life and/or headlight performance.**
- **Aiming is not necessary after replacing the bulb. When aiming adjustment is necessary, contact a NISSAN dealer.**

Use the same number and wattage as originally installed as shown in the chart.

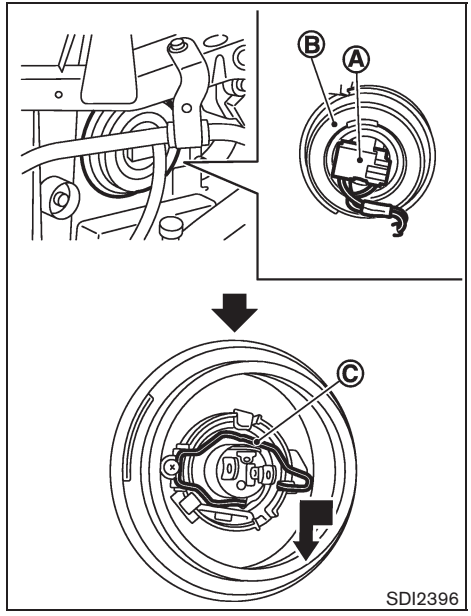

Disconnect the battery negative cable before replacing bulbs.

1. Remove the connector Ⓐ and the back cover Ⓑ .
2. Unlock the retaining spring Ⓒ , and then remove the bulb.

EXTERIOR AND INTERIOR LIGHTS

Item	Wattage (W)	Bulb No.
Headlight high/low beams (Halogen)	60/55	HB2
Front turn signal light*	21	PY21W
Front fog light (if so equipped)*	35	H8
Front side marker/park light*	5	W5W
Side turn signal light*	5	WY5W
Rear combination light*		
turn signal	21	PY21W
stop/tail	21/5	W21/5W
back-up	18	W16W
Rear side marker light*	5	W5W
License plate light*	5	W5W
Map light (if so equipped)	8	—
High-mounted stop light*	18	W16W
Ceiling light	8	—
Cargo light (if so equipped)	8	—

*: See a NISSAN dealer for replacement.
NOTE: Always check with the Parts Department at a NISSAN dealer for the latest information about parts.

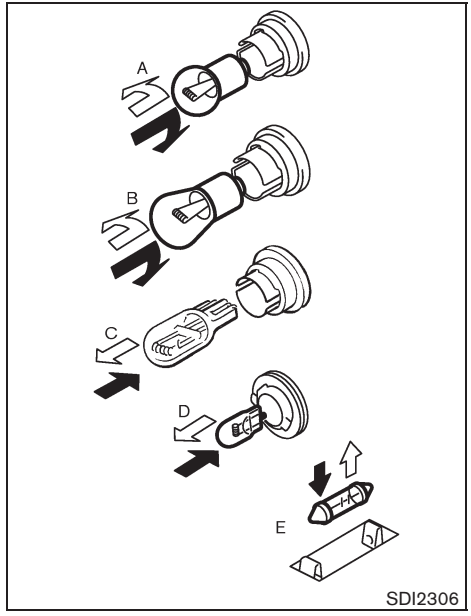

⇨: REMOVE

➡: INSTALL

Replacement procedures

All other lights are either type A, B, C, D or E. When replacing a bulb, first remove the lens and/or cover.

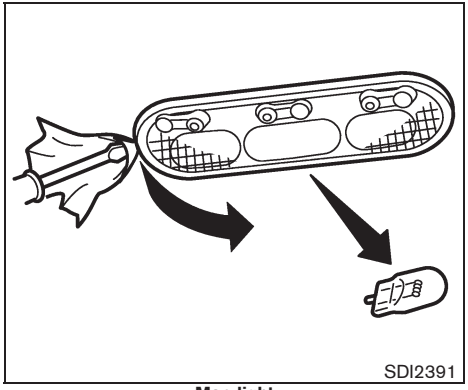

Map light

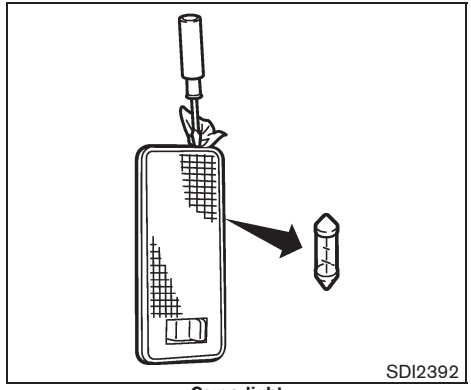

Cargo light

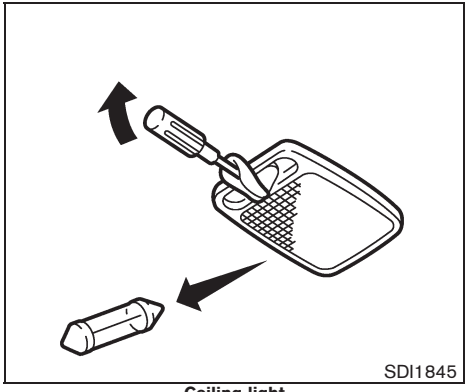

Ceiling light

If you have a flat tire, see "FLAT TIRE" in the "6. In case of emergency" section.

TIRE PRESSURE

Tire Pressure Monitoring System (TPMS)

This vehicle is equipped with the Tire Pressure Monitoring System (TPMS). It monitors tire pressure of all tires except the spare. When the low tire pressure warning light is lit, one or more of your tires is significantly under-inflated.

The TPMS will activate only when the vehicle is driven at speeds above 16 MPH (25 km/h). Also, this system may not detect a sudden drop in tire pressure (for example a flat tire while driving).

For more details, see "Low tire pressure warning light" in the "2. Instruments and controls" section, "TIRE PRESSURE MONITORING SYSTEM (TPMS)" in the "5. Starting and driving" section and "TIRE PRESSURE MONITORING SYSTEM (TPMS)" in the "6. In case of emergency" section.

Tire inflation pressure

Check the pressure of the tires (including the spare) often and always prior to long distance trips. The recommended tire pressure specifications are shown on the Tire and Loading Information label under the "Cold Tire Pressure" heading. The Tire

and Loading Information label is affixed to the driver side center pillar. Tire pressures should be checked regularly because:

- Most tires naturally lose air over time.
- Tires can lose air suddenly when driven over potholes or other objects or if the vehicle strikes a curb while parking.

The tire pressures should be checked when the tires are cold. The tires are considered COLD after the vehicle has been parked for 3 or more hours, or driven less than 1 mile (1.6 km) at moderate speeds.

Incorrect tire pressure, including under inflation, may adversely affect tire life and vehicle handling.

WARNING

- **Improperly inflated tires can fail suddenly and cause an accident.**
- **The Gross Vehicle Weight rating (GVWR) is located on the F.M.V.S.S./C.M.V.S.S. certification label. The vehicle weight capacity is indicated on the Tire and Loading Information label. Do not load your vehicle beyond this capacity. Overloading your vehicle may result in reduced tire life, unsafe operating conditions due to premature tire failure, or unfavorable handling characteristics and could also lead to a serious accident. Loading beyond the specified capacity may also result in failure of other vehicle components.**
- **Before taking a long trip, or whenever you heavily load your vehicle, use a tire pressure gauge to ensure that the tire pressures are at the specified level.**
- **For additional information regarding tires, refer to "Important Tire Safety Information" (US) or "Tire Safety Information" (Canada) in the Warranty Information Booklet.**

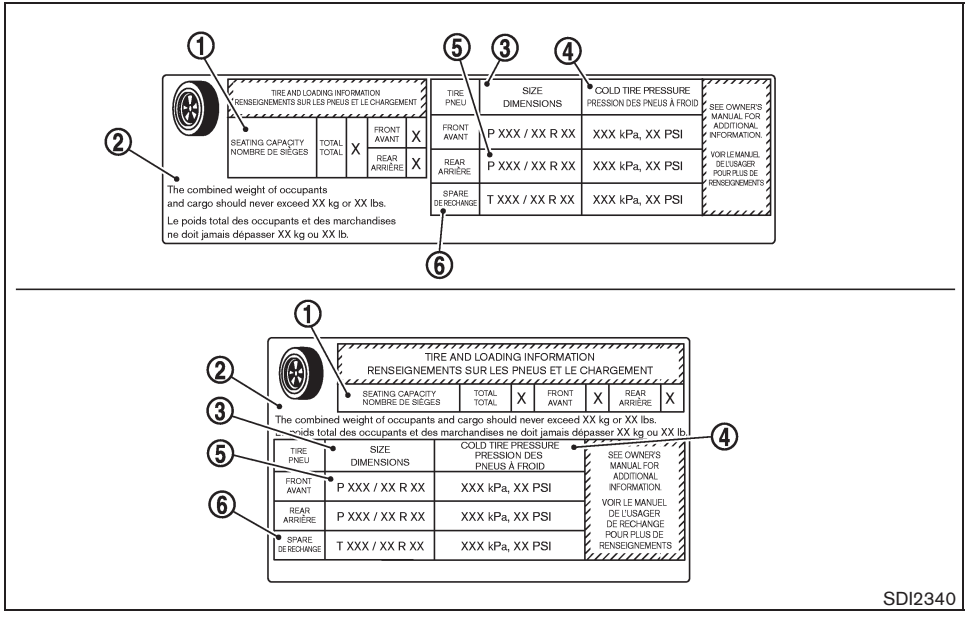

Tire and Loading Information label

① Seating capacity: The maximum number of occupants that can be seated in the vehicle.

② Vehicle load limit: See “VEHICLE LOADING INFORMATION” in the “9. Technical and consumer information” section.

③ Original size: The size of the tires originally installed on the vehicle at the factory.

④ Cold tire pressure: Inflate the tires to this pressure when the tires are cold. Tires are considered COLD after the vehicle has been parked for 3 or more hours, or driven less than 1 mile (1.6 km) at moderate speeds. The recommended cold tire inflation is set by the manufacturer to provide the best balance of tire wear, vehicle handling, driveability, tire noise, etc., up to the vehicle’s GVWR.

⑤ Tire size — see “TIRE LABELING” later in this section.

⑥ Spare tire size or compact spare tire size (if so equipped)

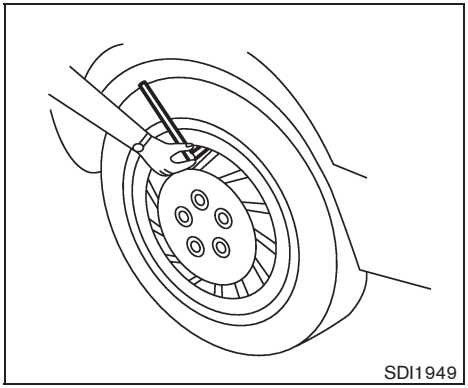

Checking the tire pressure

1. Remove the valve stem cap from the tire.
2. Press the pressure gauge squarely onto the valve stem. Do not press too hard or force the valve stem sideways, or air will escape. If the hissing sound of air escaping from the tire is heard while checking the pressure, reposition the gauge to eliminate this leakage.
3. Remove the gauge.
4. Read the tire pressure on the gauge stem and compare it to the specification shown on the Tire and Loading Information label.
5. Add air to the tire as needed. If too much air is added, press the core of the valve stem briefly with the tip of the gauge stem to release pressure. Recheck the pressure and add or release air as needed.
6. Install the valve stem cap.
7. Check the pressure of all other tires, including the spare.

	SIZE	COLD TIRE INFLATION PRESSURE
FRONT ORIGINAL TIRE	P195/60R15 87H	230 kPa, 33 PSI
	P195/55R16 86V	230 kPa, 33 PSI
REAR ORIGINAL TIRE	P195/60R15 87H	230 kPa, 33 PSI
	P195/55R16 86V	230 kPa, 33 PSI
SPARE TIRE	T125/70D15	420 kPa, 60 PSI

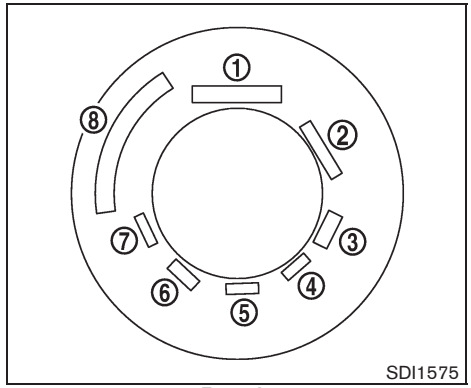

Example

TIRE LABELING

Federal law requires tire manufacturers to place standardized information on the sidewall of all tires. This information identifies and describes the fundamental characteristics of the tire and also provides the tire identification number (TIN) for safety standard certification. The TIN can be used to identify the tire in case of a recall.

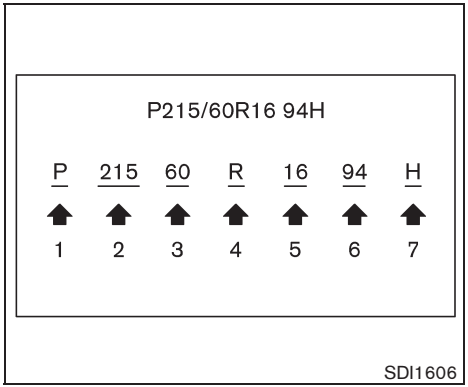

Example

① Tire size (example: P215/60R16 94H)

1. P: The “P” indicates the tire is designed for passenger vehicles. (Not all tires have this information.)
2. Three-digit number (215): This number gives the width in millimeters of the tire from sidewall edge to sidewall edge.
3. Two-digit number (60): This number, known as the aspect ratio, gives the tire’s ratio of height to width.
4. R: The “R” stands for radial.
5. Two-digit number (16): This number is the wheel or rim diameter in inches.
6. Two- or three-digit number (94): This number is the tire’s load index. It is a measurement of how much weight each tire can support. You may not find this information on all tires because it is not required by law.
7. H: Tire speed rating. You should not drive the vehicle faster than the tire speed rating.

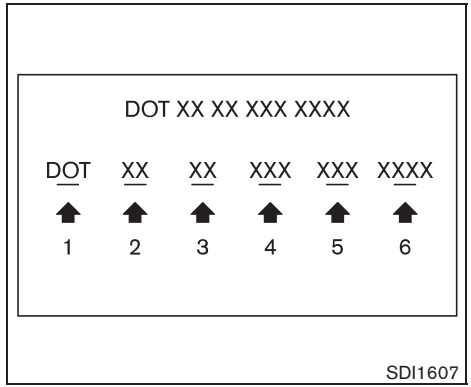

Example

② TIN (Tire Identification Number) for a new tire (example: DOT XX XX XXX XXXX)

1. DOT: Abbreviation for the “Department of Transportation”. The symbol can be placed above, below or to the left or right of the Tire Identification Number.
2. Two-digit code: Manufacturer’s identification mark
3. Two-digit code: Tire size
4. Three-digit code: Tire type code (Optional)

5. Three-digit code: Date of Manufacture
6. Four numbers represent the week and year the tire was built. For example, the numbers 3103 means the 31st week of 2003. If these numbers are missing, then look on the other sidewall of the tire.

③ Tire ply composition and material

The number of layers or plies of rubber-coated fabric in the tire.
Tire manufacturers also must indicate the materials in the tire, which include steel, nylon, polyester, and others.

④ Maximum permissible inflation pressure

This number is the greatest amount of air pressure that should be put in the tire. Do not exceed the maximum permissible inflation pressure.

⑤ Maximum load rating

This number indicates the maximum load in kilograms and pounds that can be carried by the tire. When replacing the tires on the vehicle, always use a tire that has the same load rating as the factory installed tire.

⑥ Term of “tubeless” or “tube type”

Indicates whether the tire requires an inner tube (“tube type”) or not (“tubeless”).

⑦ The word “radial”

The word “radial” is shown, if the tire has radial structure.

⑧ Manufacturer or brand name

Manufacturer or brand name is shown.

Other tire-related terminology:

In addition to the many terms that are defined throughout this section, Intended Outboard Sidewall is (1) the sidewall that contains a whitewall, bears white lettering or bears manufacturer, brand and/or model name molding that is higher or deeper than the same molding on the other sidewall of the tire, or (2) the outward facing sidewall of an asymmetrical tire that has a particular side that must always face outward when mounted on a vehicle.

TYPES OF TIRES

WARNING

- **When changing or replacing tires, be sure all four tires are of the same type (Example: Summer, All Season or Snow) and construction. A NISSAN dealer may be able to help you with information about tire type, size, speed rating and availability.**
- **Replacement tires may have a lower speed rating than the factory equipped tires, and may not match the potential maximum vehicle speed. Never exceed the maximum speed rating of the tire.**
- **Replacing tires with those not originally specified by NISSAN could affect the proper operation of the TPMS.**
- **For additional information regarding tires, refer to “Important Tire Safety Information” (US) or “Tire Safety Information” (Canada) in the Warranty Information Booklet.**

All season tires

NISSAN specifies all season tires on some models to provide good performance all year, including snowy and icy road conditions. All Season tires are identified by ALL SEASON and/or M&S (Mud and Snow) on the tire sidewall. Snow tires have better snow traction than All Season tires and may be more appropriate in some areas.

Summer tires

NISSAN specifies summer tires on some models to provide superior performance on dry roads. Summer tire performance is substantially reduced in snow and ice. Summer tires do not have the tire traction rating M&S on the tire sidewall.

If you plan to operate your vehicle in snowy or icy conditions, NISSAN recommends the use of SNOW tires or ALL SEASON tires on all four wheels.

Snow tires

If snow tires are needed, it is necessary to select tires equivalent in size and load rating to the original equipment tires. If you do not, it can adversely affect the safety and handling of your vehicle.

Generally, snow tires will have lower speed ratings than factory equipped tires and may not match the potential maximum vehicle speed. Never exceed the maximum speed rating of the tire.

If you install snow tires, they must be the same size, brand, construction and tread pattern on all four wheels.

For additional traction on icy roads, studded tires may be used. However, some U.S. states and Canadian provinces prohibit their use. Check local, state and provincial laws before installing studded tires. Skid and traction capabilities of studded snow tires, on wet or dry surfaces, may be poorer than that of non-studded snow tires.

TIRE CHAINS

Use of tire chains may be prohibited according to location. Check the local laws before installing tire chains. When installing tire chains, make sure they are the proper size for the tires on your vehicle and are installed according to the chain manufacturer's suggestions. **Use only SAE Class S chains.** Class "S" chains are used on vehicles with restricted tire to vehicle clearance. Vehicles that can use Class "S" chains are designed to meet the SAE standard minimum clearances between the tire and the closest vehicle suspension or body component required to accommodate the use of a winter traction device (tire chains or cables). The minimum clearances are determined using the factory equipped tire size. Other types may damage your vehicle. Use chain tensioners when recommended by the tire chain manufacturer to ensure a tight fit. Loose end links of the tire chain must be secured or removed to prevent the possibility of whipping action damage to the fenders or underbody. If possible, avoid fully loading your vehicle when using tire chains. In addition, drive at a reduced speed. Otherwise, your vehicle may be damaged and/or vehicle handling and performance may be adversely affected.

Tire chains must be installed only on the front wheels and not on the rear wheels.

Never install tire chains on a TEMPORARY USE ONLY spare tire.

Do not use tire chains on dry roads. Driving with tire chains in such conditions can cause damage to the various mechanisms of the vehicle due to some overstress.

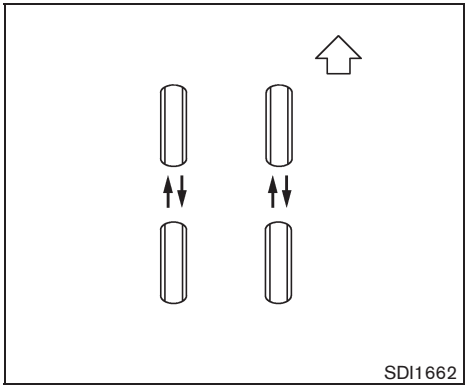

CHANGING WHEELS AND TIRES

Tire rotation

NISSAN recommends rotating the tires every 7,500 miles (12,000 km). (See “FLAT TIRE” in the “6. In case of emergency” section for tire replacing procedures.)

As soon as possible, tighten the wheel nuts to the specified torque with a torque wrench.

Wheel nut tightening torque:
80 ft-lb (108 N·m)

The wheel nuts must be kept tightened to the specification at all times. It is recommended that wheel nuts be tightened to the specification at each tire rotation interval.

WARNING

- **After rotating the tires, check and adjust the tire pressure.**
- **Retighten the wheel nuts when the vehicle has been driven for 600 miles (1,000 km) (also in cases of a flat tire, etc.).**
- **Do not include the spare tire or any other small size spare tire in the tire rotation.**
- **For additional information regarding tires, refer to “Important Tire Safety Information” (US) or “Tire Safety Information” (Canada) in the Warranty Information Booklet.**

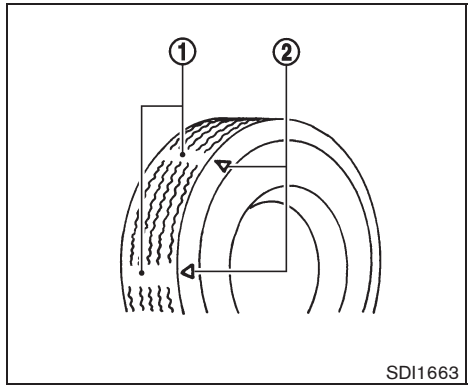

1. Wear indicator
2. Wear indicator location mark

Tire wear and damage

WARNING

- **Tires should be periodically inspected for wear, cracking, bulging or objects caught in the tread. If excessive wear, cracks, bulging or deep cuts are found, the tire(s) should be replaced.**
- **The original tires have built-in tread wear indicators. When**

wear indicators are visible, the tire(s) should be replaced.

- **Tires degrade with age and use. Have tires, including the spare, over 6 years old checked by a qualified technician, because some tire damage may not be obvious. Replace the tires as necessary to prevent tire failure and possible personal injury.**
- **Improper service of the spare tire may result in serious personal injury. If it is necessary to repair the spare tire, contact a NISSAN dealer.**
- **For additional information regarding tires, refer to "Important Tire Safety Information" (US) or "Tire Safety Information" (Canada) in the Warranty Information Booklet.**

Replacing wheels and tires

When replacing a tire, use the same size, tread design, speed rating and load carrying capacity as originally equipped. (See "SPECIFICATIONS" in the "9. Technical and consumer information" section for recommended types and sizes of tires and wheels.)

WARNING

- **The use of tires other than those recommended or the mixed use of tires of different brands, construction (bias, bias-belted or radial), or tread patterns can adversely affect the ride, braking, handling, ground clearance, body-to-tire clearance, tire chain clearance, speedometer calibration, headlight aim and bumper height. Some of these effects may lead to accidents and could result in serious personal injury.**
- **If the wheels are changed for any reason, always replace with wheels which have the same off-set dimension. Wheels of a different off-set could cause premature tire wear, degrade vehicle handling characteristics and/or interference with the brake discs/drums. Such interference can lead to decreased braking efficiency and/or early brake pad/shoe wear. See "WHEELS AND TIRES" in the "9. Technical and consumer information" section of this manual for wheel off-set dimensions.**
- **When a spare tire is mounted or a wheel is replaced, the TPMS will not function and the low tire pressure warning light will flash for approximately 1 minute. The light will remain on after 1 minute. Contact your NISSAN dealer as soon as possible for tire replacement and/or system resetting.**
- **Replacing tires with those not originally specified by NISSAN could affect the proper operation of the TPMS.**
- **Do not install a damaged or deformed wheel or tire even if it has been repaired. Such wheels or tires could have structural damage and could fail without warning.**
- **The use of retread tire is not recommended.**
- **For additional information regarding tires, refer to "Important Tire Safety Information" (US) or "Tire Safety Information" (Canada) in the Warranty Information Booklet.**

Wheel balance

Unbalanced wheels may affect vehicle handling and tire life. Even with regular use, wheels can get out of balance. Therefore, they should be balanced as required.

Wheel balance service should be performed with the wheels off the vehicle. Spin balancing the wheels on the vehicle could lead to mechanical damage.

For additional information regarding tires, refer to “Important Tire Safety Information” (US) or “Tire Safety Information” (Canada) in the Warranty Information Booklet.

Care of wheels

See “CLEANING EXTERIOR” in the “7. Appearance and care” section for details about care of the wheels.

Spare tire

When a spare tire is mounted (TEMPORARY USE ONLY), the TPMS will not function.

Observe the following precautions if the TEMPORARY USE ONLY spare tire must be used, otherwise your vehicle could be damaged or involved in an accident.

WARNING

- **The TEMPORARY USE ONLY spare tire should be used for emergency use. It should be replaced with the standard tire at the first opportunity to avoid possible tire or differential damage.**
- **Drive carefully while the TEMPORARY USE ONLY spare tire is installed. Avoid sharp turns and abrupt braking while driving.**
- **Periodically check spare tire inflation pressure. Always keep the pressure of the TEMPORARY USE ONLY spare tire at 60 psi (420 kPa, 4.2 bar).**
- **With the TEMPORARY USE ONLY spare tire installed do not drive your vehicle at speeds faster than 50 MPH (80 km/h).**
- **When driving on roads covered with snow or ice, the TEMPORARY USE ONLY spare tire should be used on the rear wheels and original tire used on the front wheels (drive wheels). Use tire chains only on the front (original) tires.**
- **Tire tread of the TEMPORARY USE ONLY spare tire will wear at a faster rate than the standard tire. Replace the spare tire as soon as the tread wear indicators appear.**
- **Do not use the spare tire on other vehicles.**
- **Do not use more than one spare tire at the same time.**

CAUTION

- **Do not use tire chains on a TEMPORARY USE ONLY spare tire. Tire chains will not fit properly and may cause damage to the vehicle.**
- **Because the TEMPORARY USE ONLY spare tire is smaller than the original tire, ground clearance is reduced. To avoid damage to the vehicle, do not drive over obstacles. Also do not drive the vehicle through an automatic car wash since it may get caught.**

MEMO

9 Technical and consumer information

Capacities and recommended fuel/lubricants 9-2
Fuel recommendation 9-3
Engine oil and oil filter recommendation..... 9-5
Air conditioning system refrigerant and lubricant recommendations 9-6
Specifications..... 9-7
Engine..... 9-7
Wheels and tires..... 9-7
Dimensions and weights 9-8
When traveling or registering your vehicle in another country..... 9-8
Vehicle identification 9-8
Vehicle Identification Number (VIN) plate 9-8
Vehicle identification number (chassis number)..... 9-9
Engine serial number 9-9
F.M.V.S.S./C.M.V.S.S. certification label 9-9
Emission control information label 9-10
Tire and loading information label..... 9-10
Air conditioner specification label (if so equipped) 9-10
Installing front license plate 9-11
Except for Krōm models..... 9-11
For Krōm models 9-13
Vehicle loading information 9-14
Terms..... 9-14
Vehicle load capacity 9-15
Securing the load..... 9-17
Loading tips..... 9-17
Measurement of weights..... 9-18
Towing a trailer..... 9-18
Flat towing 9-18
Continuously Variable Transmission (CVT)..... 9-19
Manual Transmission..... 9-19
Uniform tire quality grading..... 9-19
Treadwear 9-19
Traction AA, A, B and C..... 9-19
Temperature A, B and C..... 9-19
Emission control system warranty..... 9-20
Reporting safety defects (US only)..... 9-20
Readiness for Inspection/Maintenance (I/M) test..... 9-21
Event Data Recorders (EDR) 9-22
Owner's Manual/Service Manual order information ... 9-22
In the event of a collision 9-23

CAPACITIES AND RECOMMENDED FUEL/LUBRICANTS

The following are approximate capacities. The actual refill capacities may be a little different. When refilling, follow the procedure instructed in the "8. Maintenance and do-it-yourself" section to determine the proper refill capacity.

		Capacity (Approximate)			Recommended specifications
		US measure	Imp measure	Liter	
Fuel		13-1/4 gal	11 gal	50	See "FUEL RECOMMENDATION" later in this section.
Engine oil*1					
Drain and refill					
With oil filter change		4-3/8 qt	3-5/8 qt	4.1	• Engine oil with API Certification Mark*2 • Viscosity SAE 5W-30
Without oil filter change		4 qt	3-3/8 qt	3.8	
Cooling system					
With reservoir	CVT model	7-1/2 qt	6-1/4 qt	7.1	50% Genuine NISSAN Long Life Antifreeze/Coolant or equivalent 50% Demineralized or distilled water
	MT model	7-1/4 qt	6 qt	6.8	
Reservoir		3/4 qt	5/8 qt	0.7	
Continuously Variable Transmission (CVT) fluid		—	—	—	Genuine NISSAN CVT Fluid NS-2*3
Manual Transmission (MT) gear oil		—	—	—	Genuine NISSAN gear oil (ELF XT4447 M+) 75W-80, Genuine NISSAN gear oil (Chevron Texaco ETL8997B) 75W-80 or equivalent*4
Brake fluid		Refill to the proper oil level according to the instructions in the "8. Maintenance and do-it-yourself" section.			Genuine NISSAN Super Heavy Duty Brake Fluid*5 or equivalent DOT 3
Multi-purpose grease		—	—	—	NLGI No. 2 (Lithium soap base)
Air conditioning system refrigerant		—	—	—	HFC-134a (R-134a)*6
Air conditioning system lubricants		—	—	—	NISSAN A/C System Oil Type R or exact equivalent
Window washer fluid		1-1/4 gal	1 gal	4.5	Genuine NISSAN Windshield Washer Concentrate Cleaner & Antifreeze or equivalent

*1: For additional information, see "ENGINE OIL" in the "8. Maintenance and do-it-yourself" section for changing engine oil.
*2: For additional information, see "ENGINE OIL AND OIL FILTER RECOMMENDATION" later in this section.
*3: **Use only Genuine NISSAN CVT Fluid NS-2. Using transmission fluid other than Genuine NISSAN CVT Fluid NS-2 will damage the CVT, which is not covered by the NISSAN new vehicle limited warranty.**
*4: If Genuine NISSAN gear oil is not available, API GL-4, Viscosity SAE 75W-80 may be used as a temporary replacement. Replace with Genuine NISSAN gear oil as soon as it is available.
*5: Available in mainland U.S.A. through a NISSAN dealer.
*6: For additional information, see "VEHICLE IDENTIFICATION" later in this section for air conditioner specification label.

FUEL RECOMMENDATION

Use unleaded regular gasoline with an octane rating of at least 87 AKI (Anti-Knock Index) number (Research octane number 91).

CAUTION

- **Using a fuel other than that specified could adversely affect the emission control system, and may also affect warranty coverage.**
- **Under no circumstances should a leaded gasoline be used, because this will damage the three-way catalyst.**
- **Do not use E-85 fuel in your vehicle. Your vehicle is not designed to run on E-85 fuel. Using E-85 fuel can damage the fuel system components and is not covered by the NISSAN new vehicle limited warranty.**

Gasoline specifications

NISSAN recommends using gasoline that meets the World-Wide Fuel Charter (WWFC) specifications where it is available. Many of the automobile manufacturers developed this specification to improve emission control system and vehicle performance. Ask your service station manager if the gasoline meets the WWFC specifications.

Reformulated gasoline

Some fuel suppliers are now producing reformulated gasolines. These gasolines are specially designed to reduce vehicle emissions. NISSAN supports efforts towards cleaner air and suggests that you use reformulated gasoline when available.

Gasoline containing oxygenates

Some fuel suppliers sell gasoline containing oxygenates such as ethanol, MTBE and methanol with or without advertising their presence. NISSAN does not recommend the use of fuels of which the oxygenate content and the fuel compatibility for your NISSAN cannot be readily determined. If in doubt, ask your service station manager.

If you use oxygenate-blend gasoline, please take the following precautions as the usage of such fuels may cause vehicle performance problems and/or fuel system damage.

- **The fuel should be unleaded and have an octane rating no lower than that recommended for unleaded gasoline.**
- **If an oxygenate-blend, other than methanol blend is used, it should contain no more than 10% oxygenate. (MTBE may, however, be added up to 15%.)**
- **If a methanol blend is used, it should contain no more than 5% methanol (methyl alcohol, wood alcohol). It should also contain a suitable amount of appropriate cosolvents and corrosion inhibitors. If not properly formulated with appropriate cosolvents and corrosion inhibitors, such methanol blends may cause fuel system damage and/or vehicle performance problems. At this time, sufficient data is not available to ensure that all methanol blends are suitable for use in NISSAN vehicles.**

If any driveability problems such as engine stalling and difficult hot-starting are experienced after using oxygenate-blend fuels, immediately change to a non-oxygenate fuel or a fuel with a low blend of MTBE.

Take care not to spill gasoline during refueling. Gasoline containing oxygenates can cause paint damage.

E-85 fuel

E-85 fuel is a mixture of approximately 85% fuel ethanol and 15% unleaded gasoline. E-85 can only be used in a Flexible Fuel Vehicle (FFV). Do not use E-85 fuel in your vehicle. U.S. government regulations require fuel ethanol dispensing

pumps to be identified by a small, square, orange and black label with the common abbreviation or the appropriate percentage for that region.

Aftermarket fuel additives

NISSAN does not recommend the use of any aftermarket fuel additives (for example, fuel injector cleaner, octane booster, intake valve deposit removers, etc.) which are sold commercially. Many of these additives intended for gum, varnish or deposit removal may contain active solvent or similar ingredients that can be harmful to the fuel system and engine.

Octane rating tips

Using unleaded gasoline with an octane rating lower than recommended can cause persistent, heavy "spark knock". (Spark knock is a metallic rapping noise.) If severe, this can lead to engine damage. If you detect a persistent heavy spark knock even when using gasoline of the stated octane rating, or if you hear steady spark knock while holding a steady speed on level roads, have a NISSAN dealer correct the condition. Failure to correct the condition is misuse of the vehicle, for which NISSAN is not responsible.

Incorrect ignition timing will result in spark knock, after-run and/or overheating, which may cause excessive fuel consumption or engine damage. If any of the above symptoms are encountered, have your vehicle checked at a NISSAN dealer.

However, now and then you may notice light spark knock for a short time while accelerating or driving up hills. This is not a cause for concern, because you get the greatest fuel benefit when there is light spark knock for a short time under heavy engine load.

CAUTION

- **Your vehicle is not designed to run on E-85 fuel. Using E-85 fuel in a vehicle not specifically designed for E-85 fuel can damage fuel system components and is not covered by the NISSAN new vehicle limited warranty.**
- **E-85 is a mixture of approximately 85% fuel ethanol and 15% unleaded gasoline.**
- **U.S. government regulations require ethanol dispensing pumps to be identified by a small, square, orange and black label with the common abbreviation or the appropriate percentage for that region.**

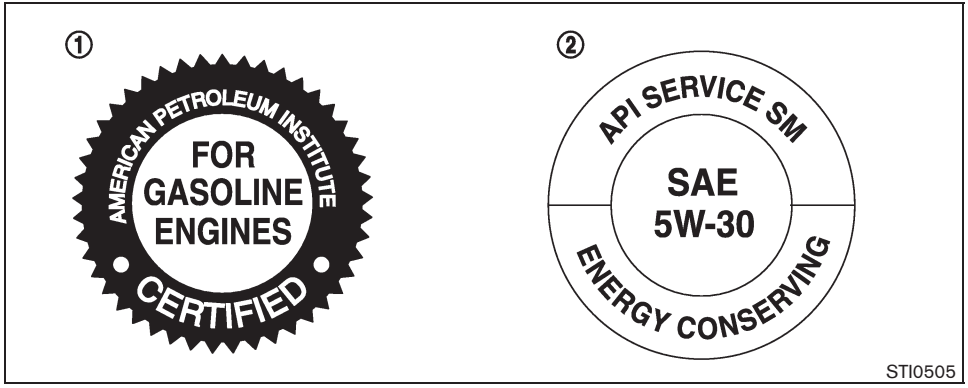

1. API certification mark
2. API service symbol

ENGINE OIL AND OIL FILTER RECOMMENDATION

Selecting the correct oil

It is essential to choose the correct grade, quality, and viscosity engine oil to ensure satisfactory engine life and performance, see "CAPACITIES AND RECOMMENDED FUEL/LUBRICANTS" earlier in this section. NISSAN recommends the use of an energy conserving oil in order to improve fuel economy.

Select only engine oils that meet the American Petroleum Institute (API) certification or International Lubricant Standardization and Approval Committee (ILSAC) certification and SAE viscosity standard. These oils have the API certification mark on the front of the container. Oils which do not have the specified quality label should not be used as they could cause engine damage.

Oil additives

NISSAN does not recommend the use of oil additives. The use of an oil additive is not necessary when the proper oil type is used and maintenance intervals are followed.

Oil which may contain foreign matter or has been previously used should not be used.

Oil viscosity

The engine oil viscosity or thickness changes with temperature. Because of this, it is important to select the engine oil viscosity based on the temperatures at which the vehicle will be operated before the next oil change. Choosing an oil viscosity other than that recommended could cause serious engine damage.

Selecting the correct oil filter

Your new NISSAN vehicle is equipped with a high-quality genuine NISSAN oil filter. When replacing, use a genuine NISSAN oil filter or its equivalent for the reason described in "Change intervals".

Change intervals

The oil and oil filter change intervals for your engine are based on the use of the specified quality oils and filters. Using an engine oil and filter other than the specified quality, or exceeding recommended oil and filter change intervals could reduce engine life. Damage to the engine caused by improper maintenance or use of incorrect oil and filter quality and/or viscosity is not covered by the NISSAN new vehicle limited warranty.

Your engine was filled with a high quality engine oil when it was built. You do not have to change the oil before the first recommended change interval. Oil and filter change intervals depend

upon how you use your vehicle.

Operation under the following conditions may require more frequent oil and filter changes.

- repeated short distance driving at cold outside temperatures
- driving in dusty conditions
- extensive idling
- stop and go commuting

Refer to the “NISSAN Service and Maintenance Guide” for the maintenance schedule.

AIR CONDITIONING SYSTEM REFRIGERANT AND LUBRICANT RECOMMENDATIONS

The air conditioning system in your NISSAN vehicle must be charged with the refrigerant HFC-134a (R-134a) and the oil, NISSAN A/C system oil Type R or the exact equivalents.

CAUTION

The use of any other refrigerant or oil will cause severe damage to the air conditioning system and will require the replacement of all air conditioner system components.

The refrigerant HFC-134a (R-134a) in your NISSAN vehicle will not harm the earth’s ozone layer. Although this refrigerant does not affect the earth’s atmosphere, certain governmental regulations require the recovery and recycling of any refrigerant during automotive air conditioning system service. A NISSAN dealer has the trained technicians and equipment needed to recover and recycle your air conditioning system refrigerant.

Contact a NISSAN dealer when servicing your air conditioning system.

SPECIFICATIONS

ENGINE

Model		MR18DE
Type		Gasoline, 4-cycle, DOHC
Cylinder arrangement		4-cylinder, in-line
Bore × Stroke	in (mm)	3.307 × 3.193 (84.0 × 81.1)
Displacement	cu in (cm^3)	109.65 (1,798)
Firing order		1-3-4-2
Idle speed	rpm	No adjustment is necessary.
Ignition timing (B.T.D.C.)	degree/rpm	
Spark plug	Standard	FXE20HR-11
Spark plug gap (Normal)	in (mm)	0.043 (1.1)
Camshaft operation		Timing chain

This spark ignition system complies with the Canadian standard ICES-002.

WHEELS AND TIRES

Road wheel

Type	Size	Offset in (mm)
Steel	15 × 6J	1.65 (42)
Aluminum	16 × 6J	1.65 (42)
T-type	15 × 4T	1.38 (35)

Tire

Type	Size	Pressure PSI (kPa) [Cold]
Conventional	P195/60R15 87H	33 (230)
	P195/55R16 86V	
T-type	T125/70D15	60 (420)

DIMENSIONS AND WEIGHTS

Overall length	in (mm)	156.7 (3,980)*1 156.5 (3,975)*2 157.8 (4,010)*1, *3 157.5 (4,000)*2, *3
Overall width	in (mm)	66.7 (1,695)
Overall height	in (mm)	66.1 (1,680) 65.0 (1,650)*3
Front tread	in (mm)	58.1 (1,475)
Rear tread	in (mm)	58.3 (1,480)
Wheelbase	in (mm)	99.6 (2,530)
Gross Vehicle Weight Rating (GVWR)	lb (kg)	See the F.M.V.S.S. or C.M.V.S.S. certification label on the driver's side center pillar.
Gross Axle Weight Rating (GAWR)		
Front	lb (kg)	
Rear	lb (kg)	

*1: With front license plate bracket

*2: Without front license plate bracket

*3: Krōm model

WHEN TRAVELING OR REGISTERING YOUR VEHICLE IN ANOTHER COUNTRY

When planning to travel in another country, you should first find out if the fuel available is suitable for your vehicle's engine.

Using fuel with an octane rating that is too low may cause engine damage. All gasoline vehicles must be operated with unleaded gasoline. Therefore, avoid taking your vehicle to areas where appropriate fuel is not available.

When transferring the registration of your vehicle to another country, state, province or district, it may be necessary to modify the vehicle to meet local laws and regulations.

The laws and regulations for motor vehicle emission control and safety standards vary according to the country, state, province or district; therefore, vehicle specifications may differ.

When any vehicle is to be taken into another country, state, province or district and registered, its modifications, transportation, and registration are the responsibility of the user. NISSAN is not responsible for any inconvenience that may result.

VEHICLE IDENTIFICATION

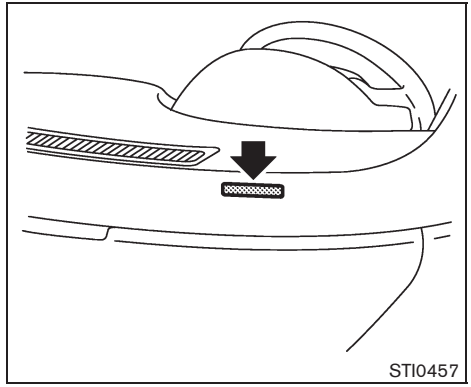

VEHICLE IDENTIFICATION NUMBER (VIN) PLATE

The vehicle identification number plate is attached as shown. This number is the identification for your vehicle and is used in the vehicle registration.

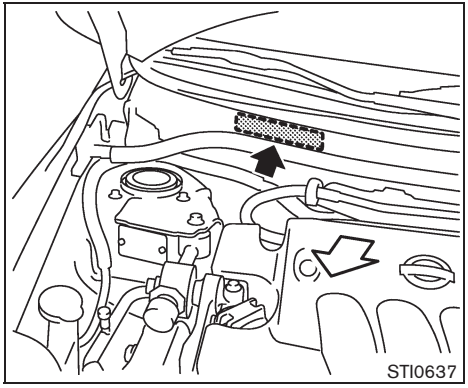

VEHICLE IDENTIFICATION NUMBER (chassis number)

The vehicle identification number is located as shown.

Remove the cover to access the number.

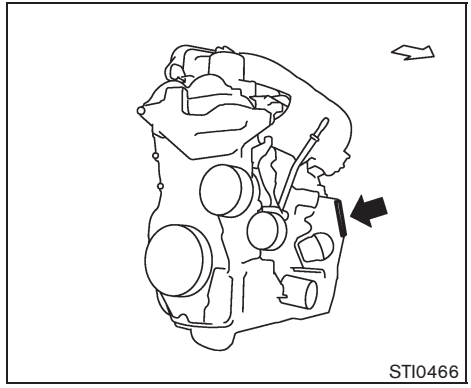

ENGINE SERIAL NUMBER

The number is stamped on the engine as shown.

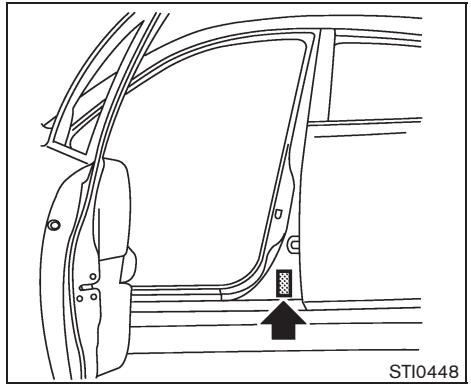

F.M.V.S.S./C.M.V.S.S. CERTIFICATION LABEL

The Federal/Canadian Motor Vehicle Safety Standards (F.M.V.S.S./C.M.V.S.S.) certification label is affixed as shown. This label contains valuable vehicle information, such as: Gross Vehicle Weight Ratings (GVWR), Gross Axle Weight Rating (GAWR), month and year of manufacture, Vehicle Identification Number (VIN), etc. Review it carefully.

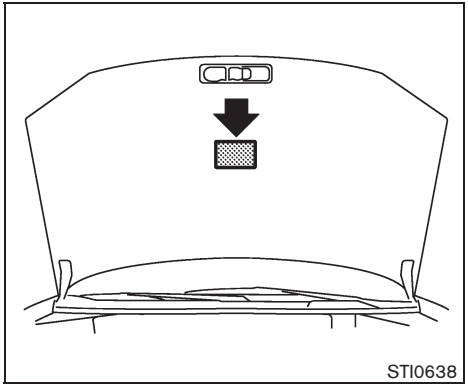

EMISSION CONTROL INFORMATION LABEL

The emission control information label is attached to the underside of the hood as shown.

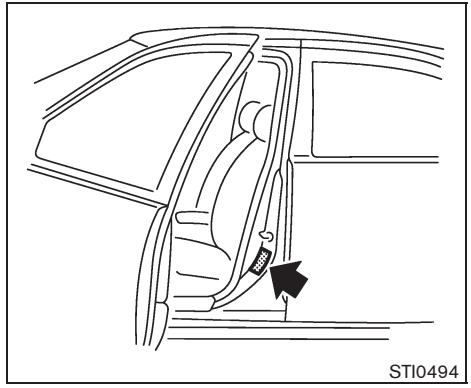

TIRE AND LOADING INFORMATION LABEL

The cold tire pressure is shown on the Tire and Loading Information label affixed to the pillar as shown.

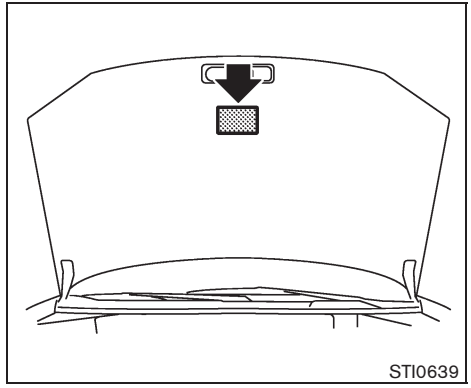

AIR CONDITIONER SPECIFICATION LABEL (if so equipped)

The air conditioner specification label is attached to the underside of the hood as shown.

INSTALLING FRONT LICENSE PLATE

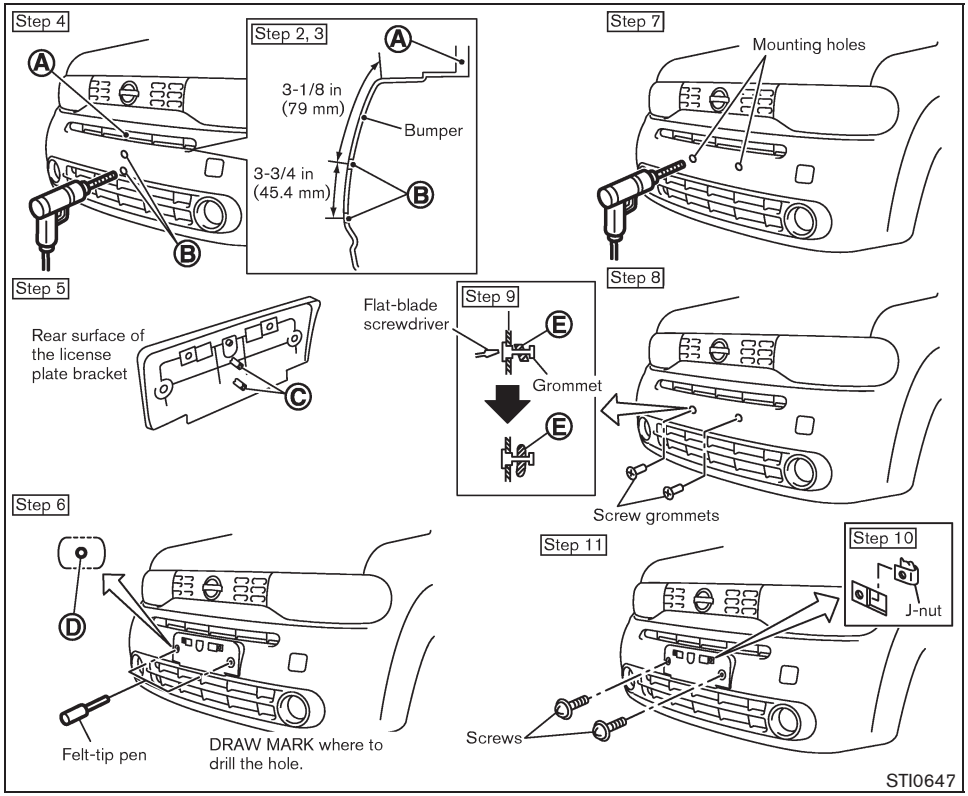

EXCEPT FOR Krōm MODELS

Use the following steps to mount the license plate:

Before mounting the license plate, confirm that the following parts are enclosed in the plastic bag.

- License plate bracket
- J-nut × 2
- Screw × 2
- Screw grommet × 2

1. Park the vehicle on flat, level ground.
2. Locate the center position Ⓐ on the lower part of the air duct. Measure straight down from the edge where the bumper and air duct meet to the aligning holes Ⓑ, keeping the tape measure lined up with the center position.
3. Mark the holes Ⓑ with a felt-tip pen.
4. Carefully drill the two aligning holes Ⓑ using a 0.39 in (10 mm) drill bit at the marked locations. **(Be sure that the drill only goes through the bumper fascia.)**
5. Line up the bosses Ⓒ or license plate bracket with the holes and hold the license plate bracket in place.

6. Mark the center of the holes Ⓓ with a felt-tip pen.
7. Carefully drill the two pilot holes using a 0.39 in (10 mm) drill bit at the marked locations. **(Be sure that the drill only goes through the bumper fascia.)**
8. Insert grommets into the hole on the fascia.
9. Insert a flat-blade screwdriver into the grommet hole to add a 90° turn onto the part Ⓔ .
10. Insert a J-nut into the license plate bracket before placing the license plate bracket on the fascia.
11. Install the license plate bracket with the screws.
12. Install the license plate with bolts that are not longer than 0.55 in (14 mm).

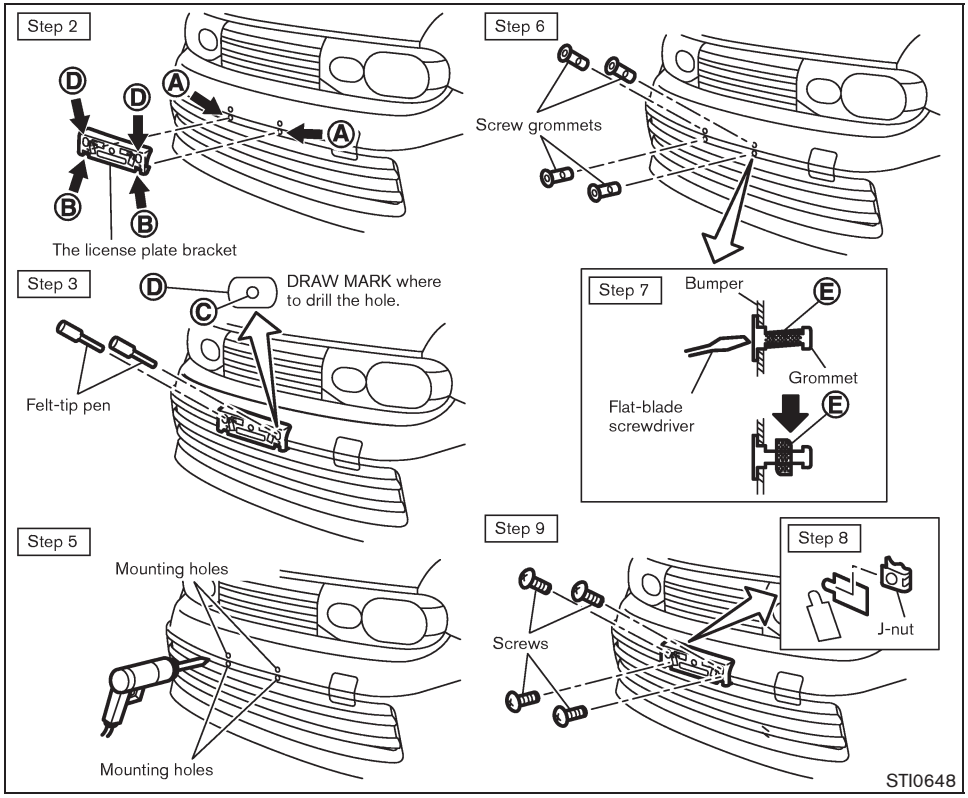

FOR Krōm MODELS

Use the following steps to mount the license plate:

Before mounting the license plate, confirm that the following parts are enclosed in the vinyl bag.

- License plate bracket
- J-nut × 2
- Screw × 4
- Screw grommet × 4

1. Park the vehicle on flat, level ground.
2. Temporarily place the license plate bracket while aligning points Ⓐ of the front bumper fascia with holes Ⓑ in the license plate bracket.
3. Confirm that points Ⓐ and Ⓑ are aligned. Hold the license plate bracket and mark the points Ⓒ on the bumper facia through the center of the holes Ⓓ with a felt-tip pen.
4. Remove the license plate bracket.
5. Carefully drill two shallow pilot holes Ⓐ and Ⓒ using a 0.39 in (10 mm) drill bit at the marked locations. **(Be sure that the drill only goes through the fascia, or damage to the nut may occur.)**
6. Insert grommets into the hole on the fascia.

7. Insert a flat-blade screwdriver into the grommet hole to add a 90° turn onto the part Ⓔ .
8. Insert a J-nut into the license plate bracket before placing the license plate bracket on the fascia.
9. Install the license plate bracket with the screws.
10. Install the license plate with bolts that are not longer than 0.55 in (14 mm).

WARNING

- **It is extremely dangerous to ride in a cargo area inside the vehicle. In a collision, people riding in these areas are more likely to be seriously injured or killed.**
- **Do not allow people to ride in any area of your vehicle that is not equipped with seats and seat belts.**
- **Be sure everyone in your vehicle is in a seat and using a seat belt properly.**

TERMS

It is important to familiarize yourself with the following terms before loading your vehicle:

- Curb Weight (actual weight of your vehicle) - vehicle weight including: standard and optional equipment, fluids, emergency tools, and spare tire assembly. This weight **does not** include passengers and cargo.
- GVW (Gross Vehicle Weight) - curb weight plus the combined weight of passengers and cargo.
- GVWR (Gross Vehicle Weight Rating) - maximum total combined weight of the unloaded vehicle, passengers, luggage, hitch, trailer tongue load and any other optional equipment. This information is located on the F.M.V.S.S./C.M.V.S.S. label.
- GAWR (Gross Axle Weight Rating) - maximum weight (load) limit specified for the front or rear axle. This information is located on the F.M.V.S.S./C.M.V.S.S. label.
- GCWR (Gross Combined Weight Rating) - The maximum total weight rating of the vehicle, passengers, cargo, and trailer.
- Vehicle Capacity Weight, Load limit, Total load capacity - maximum total weight limit specified of the load (passengers and cargo) for the vehicle. This is the maximum combined weight of occupants and cargo that can be loaded into the vehicle. If the vehicle is used to tow a trailer, the trailer tongue weight must be included as part of the cargo load. This information is located on the Tire and Loading Information label.

- Cargo capacity - permissible weight of cargo, the subtracted weight of occupants from the load limit.

VEHICLE LOAD CAPACITY

Do not exceed the load limit of your vehicle shown as “The combined weight of occupants and cargo” on the Tire and Loading Information label. Do not exceed the number of occupants shown as “Seating Capacity” on the Tire and Loading Information label.

To get “the combined weight of occupants and cargo”, add the weight of all occupants, then add the total luggage weight. Examples are shown in the following illustration.

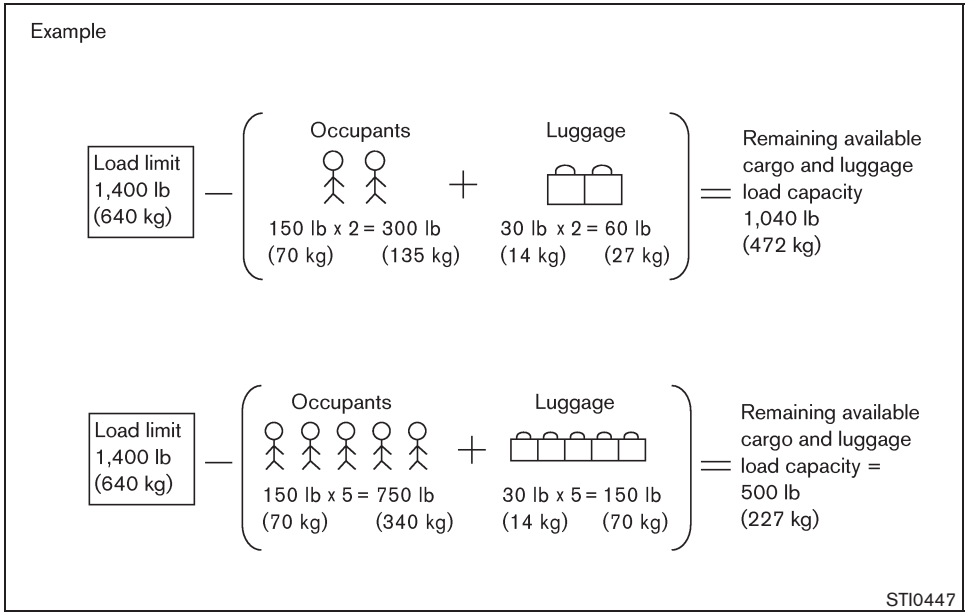

Steps for determining correct load limit

1. Locate the statement “The combined weight of occupants and cargo should never exceed XXX kg or XXX lbs” on your vehicle’s placard.
2. Determine the combined weight of the driver and passengers that will be riding in your vehicle.
3. Subtract the combined weight of the driver and passengers from XXX kg or XXX lbs.
4. The resulting figure equals the available amount of cargo and luggage load capacity. For example, if the XXX amount equals 1400 lbs. and there will be five 150 lb. passengers in your vehicle, the amount of available cargo and luggage load capacity is 650 lbs. (1400 – 750 (5 x 150) = 650 lbs) or (640 – 340 (5 x 70) = 300 kg.)
5. Determine the combined weight of luggage and cargo being loaded on the vehicle. That weight may not safely exceed the available cargo and luggage load capacity calculated in Step 4.

Before driving a loaded vehicle, confirm that you do not exceed the Gross Vehicle Weight Rating (GVWR) or the Gross Axle Weight Rating (GAWR) for your vehicle. (See “MEASUREMENT OF WEIGHTS” later in this section.)

Also check tires for proper inflation pressures. See the Tire and Loading Information label.

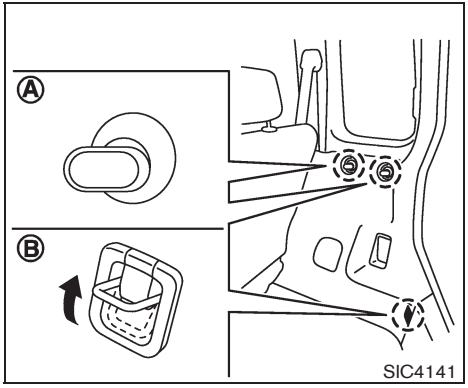

SECURING THE LOAD

There are tie down hooks located in the cargo area as shown. The tie down hooks can be used to secure cargo with ropes or other types of straps.

Do not apply a total load of more than 7 lb (3 kg) to a single hook Ⓐ or 22 lb (10 kg) to a single hook Ⓑ when securing cargo.

WARNING

- **Properly secure all cargo with ropes or straps to help prevent it from sliding or shifting. Do not place cargo higher than the seatbacks. In a sudden stop or collision, unsecured cargo could cause personal injury.**
- **The child restraint top tether strap may be damaged by contact with items in the cargo area. Secure any items in the cargo area. Your child could be seriously injured or killed in a collision if the top tether strap is damaged.**
- **Do not load your vehicle any heavier than the GVWR or the maximum front and rear GAWRs. If you do, parts of your vehicle can break, tire damage could occur, or it can change the way your vehicle handles. This could result in loss of control and cause personal injury.**

LOADING TIPS

- The GVW must not exceed GVWR or GAWR as specified on the F.M.V.S.S./C.M.V.S.S. certification label.
- Do not load the front and rear axle to the GAWR. Doing so will exceed the GVWR.

WARNING

- **Properly secure all cargo with ropes or straps to help prevent it from sliding or shifting. Do not place cargo higher than the seatbacks. In a sudden stop or collision, unsecured cargo could cause personal injury.**
- **Do not load your vehicle any heavier than the GVWR or the maximum front and rear GAWRs. If you do, parts of your vehicle can break, tire damage could occur, or it can change the way your vehicle handles. This could result in loss of control and cause personal injury.**
- **Overloading not only can shorten the life of your vehicle and the tire, but can cause unsafe vehicle handling and longer braking distances. This may cause a premature tire failure, which could result in a serious accident and personal injury. Failures caused by overloading are not covered by the vehicle's**

warranty.

MEASUREMENT OF WEIGHTS

Secure loose items to prevent weight shifts that could affect the balance of your vehicle. When the vehicle is loaded, drive to a scale and weigh the front and the rear wheels separately to determine axle loads. Individual axle loads should not exceed either of the Gross Axle Weight Ratings (GAWR). The total of the axle loads should not exceed the Gross Vehicle Weight Rating (GVWR). These ratings are given on the vehicle certification label. If weight ratings are exceeded, move or remove items to bring all weights below the ratings.

TOWING A TRAILER

Do not tow a trailer with your vehicle.

FLAT TOWING

Towing your vehicle with all four wheels on the ground is sometimes called flat towing. This method is sometimes used when towing a vehicle behind a recreational vehicle, such as a motor home.

CAUTION

- **Failure to follow these guidelines can result in severe transmission damage.**
- **Whenever flat towing your vehicle, always tow forward, never backward.**
- **DO NOT tow any Continuously Variable Transmission (CVT) vehicle with all four wheels on the ground (flat towing). Doing so WILL DAMAGE internal transmission parts due to lack of transmission lubrication.**
- **For emergency towing procedures refer to “TOWING YOUR VEHICLE” in the “6. In case of emergency” section of this manual.**

CONTINUOUSLY VARIABLE TRANSMISSION (CVT)

To tow a vehicle equipped with a Continuously Variable Transmission (CVT), an appropriate vehicle dolly **MUST** be placed under the towed vehicle's driving wheels. **Always** follow the dolly manufacturer's recommendations when using their product.

MANUAL TRANSMISSION

- Always tow with the manual transmission in Neutral.
- Your vehicle speed should never exceed 70 MPH (112 km/h) when flat towing your vehicle.
- After towing 500 miles, start and idle the engine with the transmission in Neutral for two minutes. Failure to idle the engine after every 500 miles of towing may cause damage to the transmission's internal parts.

DOT (Department Of Transportation) Quality Grades: All passenger car tires must conform to federal safety requirements in addition to these grades.

Quality grades can be found where applicable on the tire sidewall between tread shoulder and maximum section width. For example:

Treadwear 200 Traction AA Temperature A

TREADWEAR

The treadwear grade is a comparative rating based on the wear rate of the tire when tested under controlled conditions on a specified government test course. For example, a tire graded 150 would wear one and one-half (1 1/2) times as well on the government course as a tire graded 100. The relative performance of tires depends upon actual conditions of their use, however, and may depart significantly from the norm due to variations in driving habits, service practices and differences in road characteristics and climate.

TRACTION AA, A, B AND C

The traction grades, from highest to lowest, are AA, A, B and C. Those grades represent the tire's ability to stop on wet pavement as measured under controlled conditions on specified government test surfaces of asphalt and concrete. A tire marked C may have poor traction performance.

WARNING

The traction grade assigned to this tire is based on straight-ahead braking traction tests, and does not include acceleration, cornering, hydroplaning, or peak traction characteristics.

TEMPERATURE A, B AND C

The temperature grades A (the highest), B, and C, representing the tire's resistance to the generation of heat and its ability to dissipate heat when tested under controlled conditions on a specified indoor laboratory test wheel. Sustained high temperature can cause the material of the tire to degenerate and reduce tire life, and excessive temperature can lead to sudden tire failure. The grade C corresponds to a level of performance which all passenger car tires must meet under the Federal Motor Vehicle Safety Standard No. 109. Grades B and A represent higher levels of performance on the laboratory test wheel than the minimum required by law.

WARNING

The temperature grade for this tire is established for a tire that is properly inflated and not overloaded. Excessive speed, under-inflation, or excessive

loading, either separately or in combination, can cause heat build-up and possible tire failure.

EMISSION CONTROL SYSTEM WARRANTY

Your NISSAN is covered by the following emission warranties.

For US:

- Emission Defects Warranty
- Emissions Performance Warranty

Details of these warranties may be found with other vehicle warranties in your Warranty Information Booklet which comes with your NISSAN. If you did not receive a Warranty Information Booklet, or it has become lost, you may obtain a replacement by writing to:

- Nissan North America, Inc.
  Consumer Affairs Department
  P.O. Box 685003
  Franklin, TN 37068-5003

For Canada:

Emission Control System Warranty

Details of this warranty may be found with other vehicle warranties in your Warranty Information Booklet which comes with your NISSAN. If you did not receive a Warranty Information Booklet, or it has become lost, you may obtain a replacement by writing to:

- Nissan Canada Inc.
  5290 Orbitor Drive
  Mississauga, Ontario,
  L4W 4Z5

REPORTING SAFETY DEFECTS (US only)

If you believe that your vehicle has a defect which could cause a crash or could cause injury or death, you should immediately inform the National Highway Traffic Safety Administration (NHTSA) in addition to notifying NISSAN.

If NHTSA receives similar complaints, it may open an investigation, and if it finds that a safety defect exists in a group of vehicles, it may order a recall and remedy campaign. However, NHTSA cannot become involved in individual problems between you, your dealer, or NISSAN.

To contact NHTSA, you may call the Vehicle Safety Hotline toll-free at 1-888-327-4236 (TTY: 1-800-424-9153); go to http://www.safercar.gov; or write to: Administrator, NHTSA, 400 Seventh Street, SW., Washington, D.C. 20590. You can also obtain other information about motor vehicle safety from http://www.safercar.gov.

You may notify NISSAN by contacting our Consumer Affairs Department, toll-free, at 1-800-NISSAN-1 (1-800-647-7261).

READINESS FOR INSPECTION/ MAINTENANCE (I/M) TEST

Due to legal requirements in some states/areas or provinces, your vehicle may be required to be in what is called the “ready condition” for an Inspection/Maintenance (I/M) test of the emission control system.

The vehicle is set to the “ready condition” when it is driven through certain driving patterns. Usually, the “ready condition” can be obtained by ordinary usage of the vehicle.

If a powertrain system component is repaired or the battery is disconnected, the vehicle may be reset to a “not ready condition”. Before taking the I/M test, check the vehicle’s inspection/ maintenance test readiness condition. Place the ignition switch in the ON position without starting the engine. If the Malfunction Indicator Light (MIL) comes on steady for 20 seconds and then blinks for 10 seconds, the I/M test condition is “not ready”. If the MIL does not blink after 20 seconds, the I/M test condition is “ready”.

If the MIL indicates the vehicle is in a “not ready” condition, drive the vehicle through the following pattern to set the vehicle to the “ready condition”. If you cannot or do not want to perform the driving pattern, a NISSAN dealer can conduct it for you.

WARNING

Always drive the vehicle in a safe and prudent manner according to traffic conditions and obey all traffic laws.

1. Start the engine. Allow the engine to idle until the engine coolant temperature gauge needle points between the C and H (normal operating temperature).
2. Accelerate the vehicle to 55 MPH (88 km/h), then quickly release the accelerator pedal completely and keep it released for at least 10 seconds.
3. Quickly depress the accelerator pedal for a moment, then drive the vehicle at a speed of 53 to 60 MPH (86 to 96 km/h) for at least 9 minutes.
4. Stop the vehicle. Leave the engine running.
5. Accelerate the vehicle to 35 MPH (55 km/h) and maintain the speed for 20 seconds.
6. Repeat steps 4 and 5 at least 10 times.
7. Accelerate the vehicle to 55 MPH (88 km/h) and maintain the speed for at least 3 minutes.
8. Stop the vehicle. Place the transmission selector lever in the P (Park) position (for Continuously Variable Transmission models) or the shift lever in the N (Neutral) position (for Manual Transmission models).
9. Turn the engine off.
10. Repeat steps 1 through 8 at least one more time.

If step 1 through 7 is interrupted, repeat the preceding step. Any safe driving mode is acceptable between steps. Do not stop the engine until step 7 is completed.

EVENT DATA RECORDERS (EDR)

This vehicle is equipped with an Event Data Recorder (EDR). The main purpose of an EDR is to record, in certain crash or near crash-like situations, such as an air bag deployment or hitting a road obstacle, data that will assist in understanding how a vehicle's systems performed. The EDR is designed to record data related to vehicle dynamics and safety systems for a short period of time, typically 30 seconds or less. The EDR in this vehicle is designed to record such data as:

- How various systems in your vehicle were operating;
- Whether or not the driver and passenger safety belts were buckled/fastened;
- How far (if at all) the driver was depressing the accelerator and/or brake pedal; and,
- How fast the vehicle was traveling.
- Sounds are not recorded.

These data can help provide a better understanding of the circumstances in which crashes and injuries occur.

NOTE: EDR data are recorded by your vehicle only if a nontrivial crash situation occurs; no data are recorded by the EDR under normal driving conditions and no personal data (e.g. name, gender, age and crash location) are recorded. However, other parties, such as law enforcement, could combine the EDR data with the type of personally identifying data routinely acquired during a crash investigation.

To read data recorded by an EDR, special equipment is required and access to the vehicle or the EDR is needed. In addition to the vehicle manufacturer and NISSAN dealer, other parties, such as law enforcement, that have the special equipment, can read the information if they have access to the vehicle or the EDR. EDR data will only be accessed with the consent of the vehicle owner or lessee or as otherwise required or permitted by law.

OWNER'S MANUAL/SERVICE MANUAL ORDER INFORMATION

A genuine NISSAN Service Manual is the best source of service and repair information for your vehicle. Filled with wiring diagrams, illustrations and step-by-step diagnostic and adjustment procedures, this manual is the same one used by the factory trained technicians working at a NISSAN dealer. Also available are genuine NISSAN Owner's Manuals, and genuine NISSAN Service and Owner's Manuals for older NISSAN models.

In the USA:

For current pricing and availability of genuine **NISSAN Service Manuals** for the 2000 model year and later, contact:

1-800-450-9491
www.nissan-techinfo.com

For current pricing and availability of genuine **NISSAN Service Manuals** for the 1999 model year and prior, see a NISSAN dealer, or contact:

1-800-247-5321

For current pricing and availability of genuine **NISSAN Owner's Manuals** for this model year and prior, see a NISSAN dealer, or contact:

1-800-247-5321

In Canada:

To purchase a copy of a genuine NISSAN Service Manual or Owner's Manual please contact a NISSAN dealer. For the phone number

and location of a NISSAN dealer in your area call the NISSAN Information Center at 1-800-387-0122 and a bilingual NISSAN representative will assist you.

Also available are genuine NISSAN Service and Owner's Manuals for older NISSAN models.

IN THE EVENT OF A COLLISION

Unfortunately, accidents do occur. In this unlikely event, there is some important information you should know.

Many insurance companies routinely authorize the use of non-genuine collision parts in order to cut costs, among other reasons.

Insist on the use of Genuine NISSAN Collision Parts!

If you want your vehicle to be restored using parts made to NISSAN's original exacting specifications — if you want to help it to last and hold its resale value, the solution is simple. **Tell your insurance agent and your repair shop to only use Genuine NISSAN Collision Parts.** NISSAN does not warrant non-NISSAN parts, nor does NISSAN's warranty apply to damage caused by a non-genuine part.

Using Genuine NISSAN Parts can help protect your personal safety, preserve your warranty protection and maintain the resale value of your vehicle. And if your vehicle was leased, using Genuine NISSAN Parts may prevent or limit unnecessary excess wear and tear expenses at the end of your lease.

NISSAN designs its hoods with crumple zones to minimize the risk that the hood will penetrate the windshield of your vehicle in an accident. Non-genuine (imitation) parts may not provide such built-in safeguards. Also, non-genuine parts often show premature wear, rust and corrosion.

Why should you take a chance?

In over 40 states, the law says you must be advised if non-genuine parts are used to repair your vehicle. And some states have enacted laws that restrict insurance companies from authorizing the use of non-genuine collision parts during the new vehicle warranty. These laws help protect you, so you can take action to protect yourself.

It's your right!

If you should need further information visit us at:

www.nissanusa.com (for U.S. customers) or **www.nissan.ca** (for Canadian customers)

MEMO

10 Index

A

ABS (Anti-lock Braking System) 5-28
Advanced air bag system 1-46
Air bag system
  Advanced air bag system 1-46
  Front passenger air bag and status light 1-47
  Front-seat mounted side-impact supplemental air bag system 1-50
  Roof-mounted curtain side-impact supplemental air bag system 1-50
Air bag warning labels 1-53
Air bag warning light 1-53, 2-14
Air cleaner housing filter 8-16
Air conditioner
  Air conditioner operation 4-2
  Air conditioner service 4-9
  Air conditioner specification label 9-10
  Air conditioning system refrigerant and lubricant recommendations 4-9, 9-6
  In-cabin microfilter 4-8
Alarm, How to stop alarm (see vehicle security system) 2-19
Alcohol, drugs and driving 5-6
Antenna 4-29
Anti-lock Braking System (ABS) 5-28
Anti-lock braking system (ABS) warning light ... 2-10
Appearance care
  Exterior appearance care 7-2
  Interior appearance care 7-5
Armrest 1-8
Audible reminders 2-17
Audio operation precautions 4-9
Audio system 4-9
  Steering wheel audio controls 4-28
Autolight system 2-24
Automatic
  Air conditioner 4-6
  Door locks 3-5
Average fuel consumption 2-9
Average speed 2-9
Avoiding collision and rollover 5-5

B

Back door 3-22
Battery 8-13
  Battery replacement, Intelligent Key 8-23
  Battery replacement, Keyfob 8-22
  Battery saver system 2-25
  Variable voltage control system 8-14
Before starting the engine 5-12
Bluetooth® Hands-Free Phone System 4-31
Booster seats 1-35
Brake
  Anti-lock Braking System (ABS) 5-28
  Brake and clutch fluid 8-11
  Brake system 5-27
  Parking brake operation 5-20
  Warning light 2-11
Break-in schedule 5-23
Brightness control, Instrument panel 2-26
Bulb check/instrument panel 2-10
Bulb replacement 8-25

C

Cabin air filter 4-8
Capacities and recommended fuel/lubricants 9-2
Car phone or CB radio 4-31
Cargo cover 2-34
Cargo light 2-41
Catalytic converter, Three way catalyst 5-2
CD care and cleaning 4-27
Ceiling light 2-40
Child restraints 1-19
  Booster seats 1-35
  Installation using LATCH 1-24
  Installation using the seat belts 1-29
  Precautions on child restraints 1-19
  Top tether strap 1-22
Child safety 1-11
Child safety rear door lock 3-6
Chimes, Audible reminders 2-17
Circuit breaker, Fusible link 8-20
Cleaning exterior and interior 7-2, 7-5
Clock 2-28
Clutch fluid 8-11
Cockpit 2-2
Cold weather driving 5-30
Command (See Bluetooth® Hands-Free Phone System) 4-37
Compact Disc (CD) player (See audio system) 4-18, 4-24
Continuously Variable Transmission (CVT) fluid 8-11
Controls, Steering wheel audio controls 4-28

Coolant
Capacities and recommended fuel/ lubricants 9-2
Changing engine coolant..... 8-8
Checking engine coolant level..... 8-8
Corrosion protection..... 7-6
Cover, Cargo cover..... 2-34
Cruise control 5-21
Cup holders 2-31
CVT, Driving with CVT
(Continuously Variable Transmission)..... 5-7, 5-14

D

Daytime running light system 2-25
Defroster switch, Rear window and outside mirror defroster switch 2-23
Dimensions and weights 9-8
Door open warning light..... 2-11
Drive belt 8-15
Driving
Cold weather driving 5-30
Driving with CVT
(Continuously Variable Transmission).... 5-7, 5-14
Driving with manual transmission..... 5-8, 5-18
Precautions when starting and driving 5-2

E

Economy, Fuel 5-23
Electric power steering system..... 5-26
Electric power steering warning light 2-12
Emission control information label..... 9-10
Emission control system warranty 9-20
Engine
Before starting the engine 5-12
Break-in schedule..... 5-23
Capacities and recommended fuel/ lubricants 9-2
Changing engine coolant..... 8-8
Changing engine oil and filter..... 8-9
Checking engine coolant level..... 8-8
Checking engine oil level..... 8-8
Coolant temperature gauge..... 2-6
Engine block heater 5-31
Engine compartment check locations 8-6
Engine cooling system 8-7
Engine oil..... 8-8
Engine oil and oil filter recommendation 9-5
Engine oil viscosity 9-5
Engine serial number 9-9
Engine specifications 9-7
If your vehicle overheats..... 6-11
Starting the engine 5-12
Event Data Recorders (EDR) 9-22
Exhaust gas (carbon monoxide) 5-2

F

F.M.V.S.S./C.M.V.S.S. certification label..... 9-9
Filter
Air cleaner housing filter 8-16
Changing engine oil and filter..... 8-9
Flashers (See hazard warning flasher switch)... 2-27
Flat tire..... 6-2
Flat towing..... 9-18
Floor mat cleaning 7-5
Fluid
Brake and clutch fluid 8-11
Capacities and recommended fuel/ lubricants 9-2
Continuously Variable Transmission (CVT) fluid 8-11
Engine coolant 8-7
Engine oil..... 8-8
Window washer fluid 8-12
FM-AM radio with Compact Disc (CD) player 4-17
FM-AM-SAT radio with Compact Disc (CD) player 4-21
Fog light switch 2-27
Front manual seat adjustment..... 1-3
Front passenger air bag and status light 1-47
Front seat, Front seat adjustment 1-3
Front-seat active head restraints 1-7
Fuel
Capacities and recommended fuel/ lubricants 9-2
Distance to empty 2-8
Fuel economy 5-23
Fuel octane rating..... 9-3
Fuel recommendation..... 9-3
Fuel-filler cap..... 3-24
Fuel-filler door..... 3-24
Gauge 2-7
Fuses 8-19
Fusible links 8-20

G

Gas cap 3-24
Gauge 2-4
Engine coolant temperature gauge..... 2-6
Fuel gauge 2-7
Odometer..... 2-5
Speedometer..... 2-5

Tachometer 2-6
Trip computer 2-8
General maintenance 8-2
Glove box 2-33

H

Hands-free phone system, Bluetooth® 4-31
Hazard warning flasher switch 2-27
Head restraints 1-6
Headlights
Bulb replacement 8-26
Headlight switch 2-23
Heater
Engine block heater 5-31
Heater and air conditioner operation 4-2
Hood release 3-21
Hook
Luggage hook 2-35
Utility hooks 2-36
Horn 2-28

I

Ignition switch
(with Intelligent Key system) 5-9
(without Intelligent Key system) 5-7
Key positions 5-8
Immobilizer system 2-19
In-cabin microfilter 4-8
Indicator lights 2-15
Inside mirror 3-26
Inspection/maintenance (I/M) test 9-21
Instrument brightness control 2-26
Instrument panel 2-3
Intelligent Key system 3-10
Intelligent Key system warning light 2-12
Key operating range 3-12
Key operation 3-13
P position selecting warning light 2-14
Remote keyless operation 3-17
Interior light replacement 8-27
Interior lights 2-39
iPod® connecting 4-25
ISOFIX child restraint 1-20

J

Jump starting 6-8

K

Keyless entry
(See remote keyless entry system) 3-7
With Intelligent Key system
(See Intelligent Key system) 3-17
Keys 3-2
Keys, For Intelligent Key system 3-10

L

Labels
Air bag warning labels 1-53
Air conditioner specification label 9-10
Emission control information label 9-10
Engine serial number 9-9
F.M.V.S.S./C.M.V.S.S. certification label 9-9
Tire and Loading Information label 8-30, 9-10
Vehicle identification number (VIN) 9-8
LATCH system 1-20
License plate, Installing front license plate 9-11
Light
Air bag warning light 1-53
Bulb replacement 8-25
Cargo light 2-41
Ceiling light 2-40
Fog light switch 2-27
Headlight switch 2-23
Headlights bulb replacement 8-26
Indicator lights 2-15
Interior lights 2-39
Map lights 2-39
Replacement 8-25
Warning/indicator lights and audible reminders 2-10
Lights, Exterior and interior light replacement ... 8-27
Loading information (See vehicle loading information) 9-14
Lock
Automatic door locks 3-5
Back door lock 3-22
Door locks 3-4
Power door lock 3-4
Low fuel warning light 2-12
Low tire pressure warning light 2-13
Low tire pressure warning system (See tire pressure monitoring system (TPMS)) 5-3
Luggage hooks 2-35

M

Maintenance
Battery 8-13
General maintenance 8-2
Inside the vehicle 8-3
Maintenance precautions 8-5

Maintenance requirements 8-2
Outside the vehicle 8-2
Seat belt maintenance..... 1-18
Malfunction indicator light (MIL) 2-15
Manual air conditioner 4-3
Manual front seat adjustment 1-3
Map lights 2-39
Mechanical key (Intelligent Key system)..... 3-4
Meter, Trip computer 2-8
Meters and gauges 2-4
Meters and gauges, Instrument brightness control 2-26
Mirror
Inside mirror 3-26
Outside mirrors 3-27

N

New vehicle break-in 5-23
NISSAN Vehicle Immobilizer System..... 2-19

O

Odometer..... 2-5
Off-road recovery 5-5
Oil
Capacities and recommended fuel/ lubricants 9-2
Changing engine oil and filter..... 8-9
Checking engine oil level..... 8-8
Engine oil..... 8-8
Engine oil viscosity 9-5
Outside air temperature display 2-7
Outside mirrors 3-27
Overdrive OFF switch 5-16
Overheat, If your vehicle overheats..... 6-11
Owner's Manual/Service Manual order information..... 9-22

P

Panic alarm..... 3-8, 3-18
Parking
Parking brake operation 5-20
Parking on hills..... 5-25
Phone
Bluetooth® Hands-Free Phone System 4-31
Car phone or CB radio..... 4-31
Power
Electric power steering system 5-26
Power door lock 3-4
Power outlet..... 2-30
Power windows 2-36
Precautions
Audio operation 4-9
Braking precautions 5-27
Child restraints..... 1-19
Cruise control 5-21
Maintenance..... 8-5
Seat belt usage 1-8
Supplemental restraint system..... 1-40
When starting and driving..... 5-2
Push starting 6-10
Push-button ignition switch 5-9

R

Radio 4-9
Car phone or CB radio..... 4-31
FM-AM radio with Compact Disc (CD) player 4-17
FM-AM-SAT radio with Compact Disc (CD) player..... 4-21
Steering wheel audio controls 4-28
Rapid air pressure loss..... 5-6
Readiness for inspection/maintenance (I/M) test..... 9-21
Rear center seat belt 1-16
Rear door lock, Child safety rear door lock..... 3-6
Rear seats..... 1-4
Rear window and outside mirror defroster switch..... 2-23
Rear window wiper and washer switch..... 2-22
Recorders, Event data..... 9-22
Registering your vehicle in another country..... 9-8
Remote keyless entry function, For Intelligent Key system 3-17
Remote keyless entry system 3-7
Reporting safety defects (US only)..... 9-20
Rollover 5-5

S

Safety
Child seat belts 1-11
Reporting safety defects (US only)..... 9-20
Seat adjustment
Front manual seat adjustment..... 1-3
Front seats 1-3
Seat belt(s)
Child safety..... 1-11
Infants..... 1-11
Injured persons..... 1-12
Larger children 1-11

Precautions on seat belt usage..... 1-8
Pregnant women..... 1-12
Rear center seat belt..... 1-16
Seat belt cleaning 7-6
Seat belt extenders..... 1-18
Seat belt hooks 1-15
Seat belt maintenance..... 1-18
Seat belt warning light 2-14
Seat belts 1-8
Seat belts with pretensioners..... 1-52
Shoulder belt height adjustment..... 1-15
Small children..... 1-11
Three-point type 1-12
Seat(s), Seats..... 1-2
Security system
(NISSAN Vehicle Immobilizer System),
Engine start 2-19
Security system, Vehicle security system 2-17
Selector lever, Shift lock release 5-17
Servicing air conditioner..... 4-9
Shift lock release, Transmission 5-17
Shifting
CVT (Continuously Variable
Transmission)..... 5-7, 5-14
Manual transmission 5-8, 5-18
Shoulder belt height adjustment, For front
seats 1-15
Small light indicator light 2-16
Sonar system..... 5-24
Spare tire..... 8-37, 9-7
Spark plugs 8-15
Speedometer..... 2-5
Starting
Before starting the engine 5-12
Jump starting..... 6-8
Precautions when starting and driving 5-2
Push starting 6-10
Starting the engine 5-12
Status light, Front passenger air bag 1-47
Steering
Electric power steering system 5-26
Steering lock 5-8
Steering wheel switch for audio controls 4-28
Tilting steering column 3-25
Storage 2-31
Sun visors 3-26
Supplemental air bag warning labels..... 1-53
Supplemental air bag warning light 1-53, 2-14
Supplemental restraint system..... 1-40
Precautions on supplemental restraint
system 1-40
Switch
Audio control steering wheel switch 4-28
Autolight switch..... 2-24
Fog light switch..... 2-27
Hazard warning flasher switch..... 2-27
Headlight switch 2-23
Overdrive OFF switch 5-16
Power door lock switch 3-5
Rear window and outside mirror defroster
switch..... 2-23
Turn signal switch..... 2-26
Vehicle dynamic control (VDC) off switch ... 2-28

T

Tachometer..... 2-6
Temperature display 2-7
Temperature gauge, Engine coolant
temperature gauge..... 2-6
Theft (NISSAN Vehicle Immobilizer System),
Engine start 2-19
Three-way catalyst..... 5-2
Tilt steering column..... 3-25
Tire pressure, Low tire pressure warning
light 2-13
Tires
Flat tire..... 6-2
Low tire pressure warning system..... 5-3
Tire and Loading information label 8-30
Tire and Loading Information label 9-10
Tire chains..... 8-34
Tire dressing 7-4
Tire pressure 8-28
Tire pressure monitoring system
(TPMS) 5-3, 6-2
Tire rotation 8-35
Types of tires..... 8-33
Uniform tire quality grading 9-19
Wheel/tire size 9-7
Wheels and tires..... 8-28
Tonneau cover (see cargo cover)..... 2-34
Top tether strap child restraints 1-22
Towing
Flat towing..... 9-18
Tow truck towing..... 6-12
Towing a trailer..... 9-18
TPMS, Tire pressure monitoring system 5-3
TPMS, Tire pressure warning system 6-2
Trailer towing..... 9-18
Transmission
Continuously Variable Transmission (CVT)
fluid 8-11
Driving with CVT
(Continuously Variable Transmission).... 5-7, 5-14

Driving with manual transmission 5-8, 5-18
Transmission selector lever lock release 5-17
Transmitter (See remote keyless entry system).... 3-7
Transmitter, With Intelligent Key system (See Intelligent Key system) 3-17
Traveling or registering your vehicle in another country..... 9-8
Trip computer 2-8
Turn signal switch..... 2-26

U

Underbody cleaning 7-3
Uniform tire quality grading 9-19

V

Variable voltage control system..... 8-14
Vehicle
Dimensions and weights 9-8
Identification number (VIN)..... 9-8
Information display..... 2-7
Loading information..... 9-14
Recovery (freeing a stuck vehicle)..... 6-15
Security system 2-17
Vehicle dynamic control (VDC) off switch ... 2-28
Vehicle dynamic control (VDC) system 5-29
Ventilators 4-2
Voice command (See Bluetooth® Hands-Free Phone System) ... 4-37

W

Warning labels, Air bag warning labels 1-53
Warning light
Air bag warning light 1-53, 2-14
Anti-lock braking system (ABS) warning light 2-10
Brake warning light 2-11
Door open warning light..... 2-11
Electric power steering warning light 2-12
Intelligent Key system warning light 2-12
Low fuel warning light 2-12
Low tire pressure warning light..... 2-13
Seat belt warning light 2-14
Warning lights..... 2-10
Warning, Hazard warning flasher switch..... 2-27
Warning, Tire pressure monitoring system (TPMS) 5-3, 6-2
Warning, Warning/indicator lights and audible reminders..... 2-10
Warranty, Emission control system warranty..... 9-20
Washer switch
Rear window wiper and washer switch..... 2-22
Windshield wiper and washer switch 2-20
Washing 7-2
Waxing..... 7-3
Weights (See dimensions and weights) 9-8
Wheel/tire size 9-7
Wheels and tires..... 8-28
Cleaning aluminum alloy wheels..... 7-4
Window washer fluid 8-12
Window(s)
Cleaning 7-3
Power windows 2-36
Windshield wiper and washer switch 2-20
Wiper
Rear window wiper and washer switch..... 2-22
Rear window wiper blade 8-18
Windshield wiper and washer switch 2-20
Wiper blades..... 8-17

MEMO

GAS STATION INFORMATION

FUEL RECOMMENDATION:

Use unleaded regular gasoline with an octane rating of at least 87 AKI (Anti-Knock Index) number (Research octane number 91).

CAUTION

- **Using a fuel other than that specified could adversely affect the emission control systems, and may also affect warranty coverage.**
- **Under no circumstances should a leaded gasoline be used, since this will damage the three way catalyst.**
- **Do not use E-85 fuel in your vehicle. Your vehicle is not designed to run on E-85 fuel. Using E-85 fuel can damage the fuel system components and is not covered by the NISSAN new vehicle limited warranty.**

For additional information, see “CAPACITIES AND RECOMMENDED FUEL/LUBRICANTS” in the “9. Technical and consumer information” section.

ENGINE OIL RECOMMENDATION:

- Engine oil with API Certification Mark
- Viscosity SAE 5W-30

See “CAPACITIES AND RECOMMENDED FUEL/LUBRICANTS” in the “9. Technical and consumer information” section for engine oil and oil filter recommendation.

COLD TIRE PRESSURES:

The label is typically located on the driver side center pillar or on the driver’s door. For additional information, see “WHEELS AND TIRES” in the “8. Maintenance and do-it-yourself” section.

NEW VEHICLE BREAK-IN PROCEDURES RECOMMENDATION:

During the first 1,200 miles (2,000 km) of vehicle use, follow the recommendations outlined in the “BREAK-IN SCHEDULE” in the “5. Starting and driving” section of this Owner’s Manual. Follow these recommendations for the future reliability and economy of your new vehicle.

UTSD9-E9U0K

Printing: January 2009 (01)
Publication No.: OM9E-0Z12U0
Printed in Japan
T00OM 1FC0D

Z12-D