SECTION 1 – 1

OPERATION OF INSTRUMENTS AND CONTROLS

Overview of instruments and controls

Instrument panel overview 2
Instrument cluster overview 8
Indicator symbols on the instrument panel 9

Instrument panel overview

▶Vehicles with rear seat entertainment system (view A)

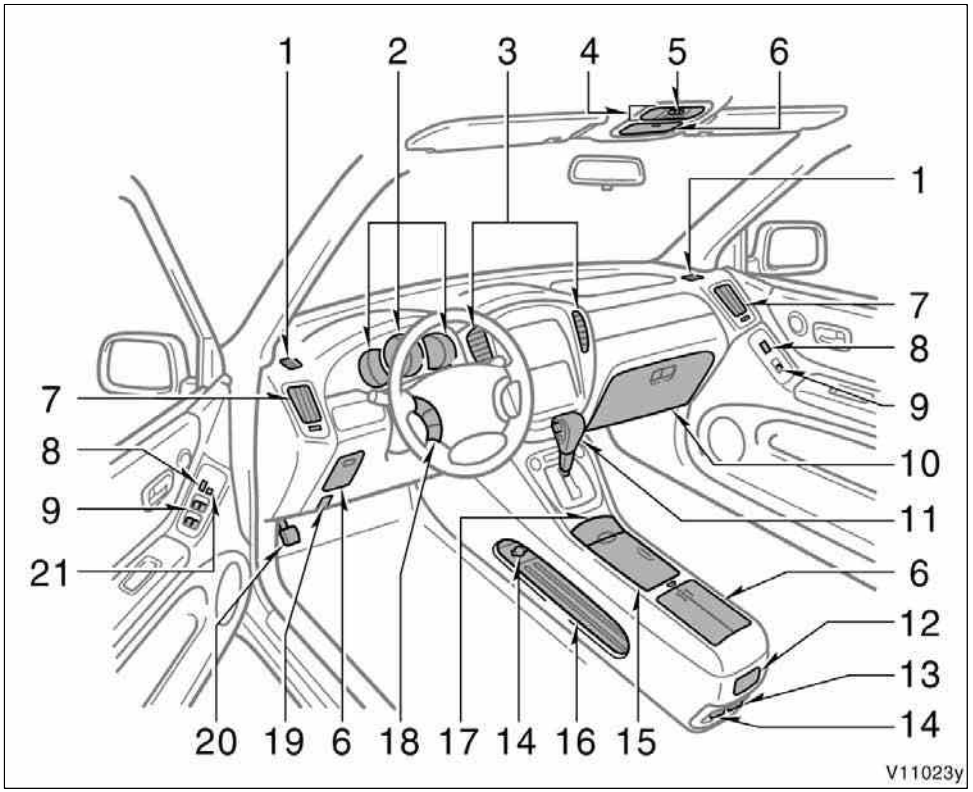

1. Side defroster outlets
2. Instrument cluster
3. Center vents
4. Electric moon roof switch and personal lights
5. Garage door opener
6. Auxiliary boxes
7. Side vents
8. Power door lock switches
9. Power window switches
10. Glove box
11. Automatic transmission selector lever
12. Rear ashtray
13. Input terminal adapter
14. Power outlets
15. Cup holder
16. Container
17. Front ashtray
18. Audio remote control switches
19. Hood lock release lever
20. Parking brake pedal
21. Window lock switch

▶Vehicles without rear seat entertainment system (view A)

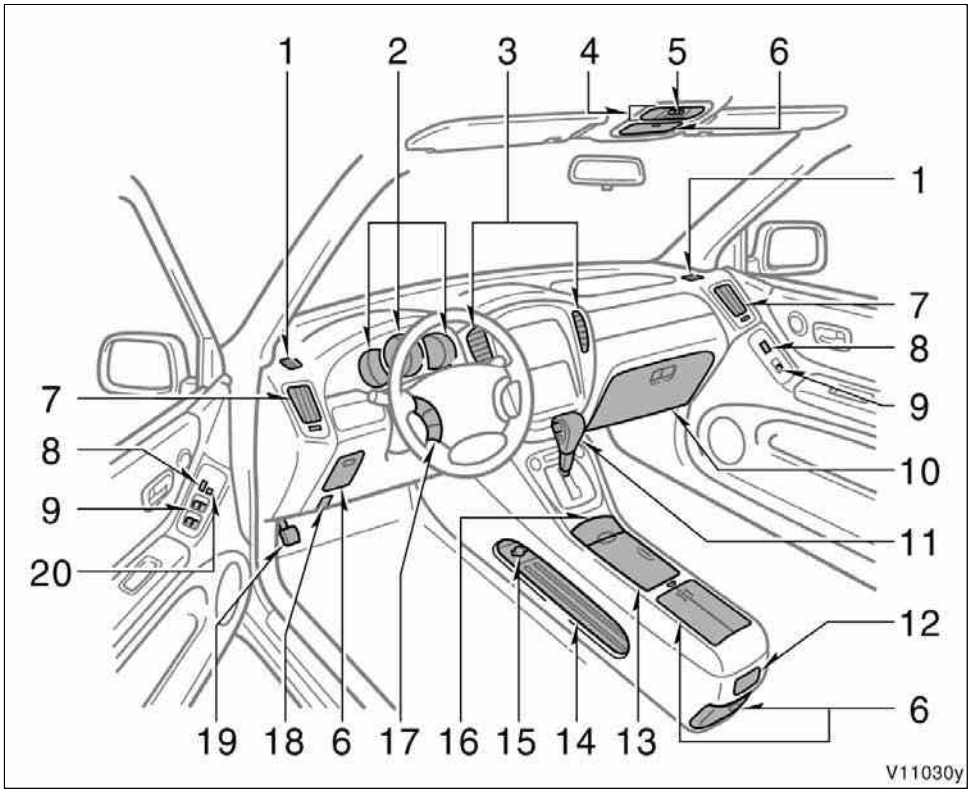

1. Side defroster outlets
2. Instrument cluster
3. Center vents
4. Electric moon roof switch and personal lights
5. Garage door opener
6. Auxiliary boxes
7. Side vents
8. Power door lock switches
9. Power window switches
10. Glove box
11. Automatic transmission selector lever
12. Rear ashtray
13. Cup holder
14. Container
15. Power outlet
16. Front ashtray
17. Audio remote control switches
18. Hood lock release lever
19. Parking brake pedal
20. Window lock switch

▶Vehicles with manual air conditioning controls (view B)

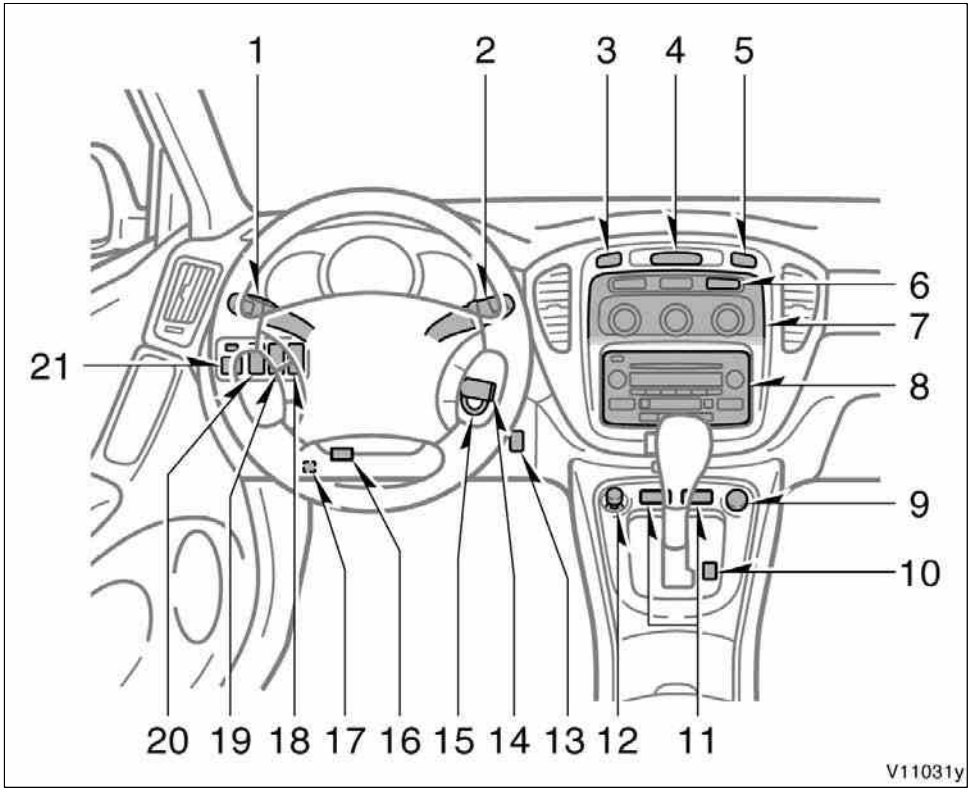

1. Headlight, turn signal and front fog light switches
2. Wiper and washer switches
3. Emergency flasher switch
4. Clock
5. Front passenger’s seat belt reminder light
6. Rear window and outside rear view mirror defogger and windshield wiper de–icer switch
7. Air conditioning controls
8. Car audio
9. “AIRBAG ON” and “AIRBAG OFF” indicator lights
10. Snow mode button
11. Seat heater switches
12. Cigarette lighter
13. “TRAC OFF” switch (two–wheel drive models)
14. Cruise control switch
15. Ignition switch
16. Tilt steering lock release lever
17. Tire pressure warning system reset switch

18. Power outlet (115 VAC) main switch
19. Rear heater main switch
20. Theft deterrent system/engine immobilizer system indicator light
21. Power rear view mirror control switches

▶Vehicles with automatic air conditioning controls (view B)

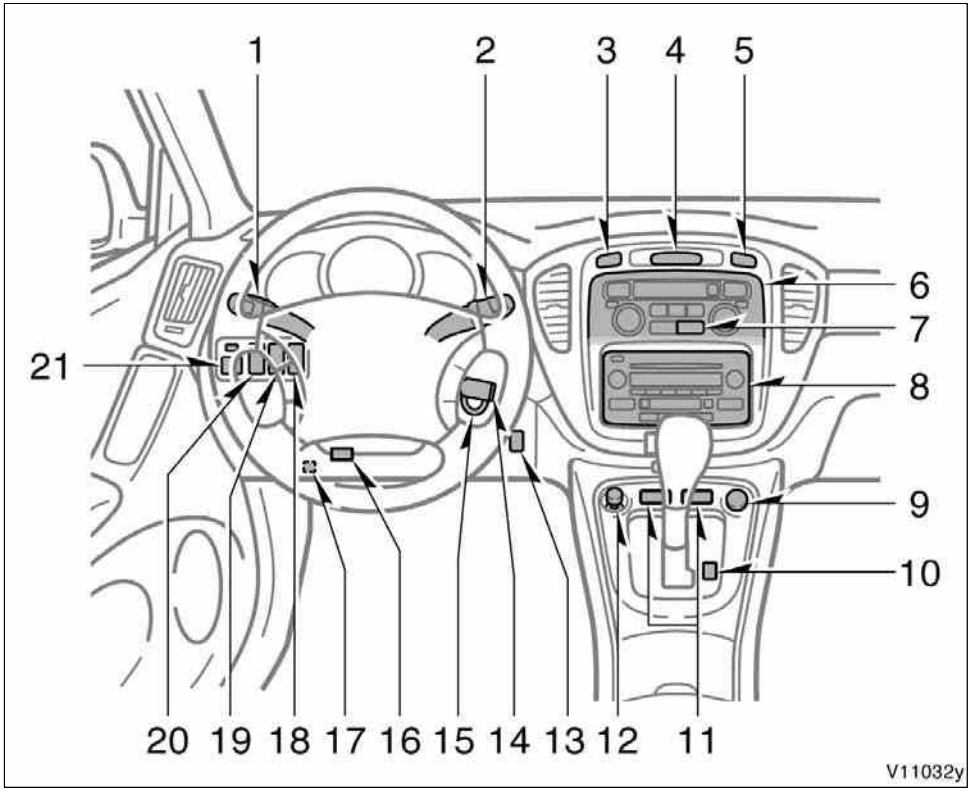

1. Headlight, turn signal and front fog light switches
2. Wiper and washer switches
3. Emergency flasher switch
4. Clock
5. Front passenger’s seat belt reminder light
6. Air conditioning controls and multi–information display
7. Rear window and outside rear view mirror defogger and windshield wiper de–icer switch
8. Car audio
9. “AIRBAG ON” and “AIRBAG OFF” indicator lights
10. Snow mode button
11. Seat heater switches
12. Cigarette lighter
13. “TRAC OFF” switch (two–wheel drive models)
14. Cruise control switch
15. Ignition switch
16. Tilt steering lock release lever
17. Tire pressure warning system reset switch

18. Power outlet (115 VAC) main switch
19. Rear heater main switch
20. Theft deterrent system/engine immobilizer system indicator light
21. Power rear view mirror control switches

Instrument cluster overview

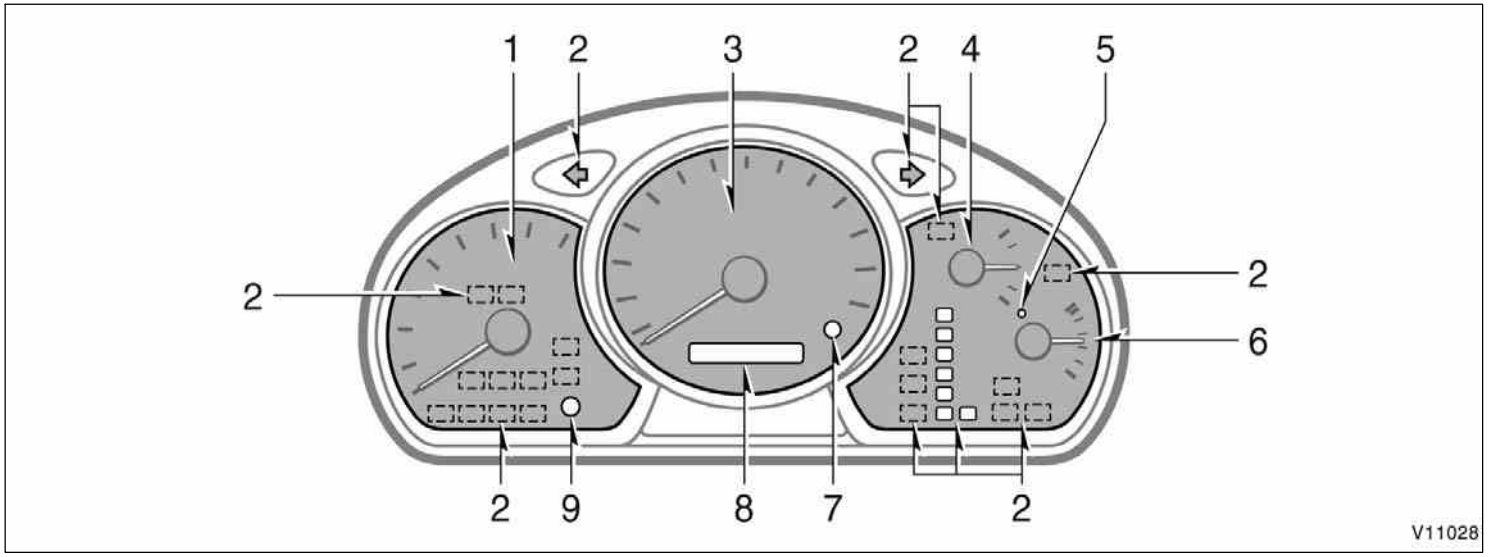

1. Tachometer
2. Service reminder indicators and indicator lights
3. Speedometer
4. Fuel gauge
5. Low fuel level warning light
6. Engine coolant temperature gauge
7. Trip meter reset knob
8. Odometer and two trip meters
9. Instrument panel light control knob

Indicator symbols on the instrument panel

BRAKE or	Brake system warning light*1
	Driver’s seat belt reminder light*1
PASSENGER	Front passenger’s seat belt reminder light*1
	Discharge warning light*1
	Low engine oil pressure warning light*1
CHECK or	Malfunction indicator lamp*1

ABS or	Anti–lock brake system warning light*1
	Open door warning light*1
A/T OIL TEMP	Automatic transmission fluid temperature warning light*1
	SRS warning light*1
VSC	Vehicle stability control system warning light*1
	Low tire pressure warning light*1
	Low windshield washer fluid level warning light*1

MAINT REQD	Engine oil replacement reminder light*1 (for vehicles sold in U.S.A.)
AIRBAG ON	“AIRBAG ON” indicator light
AIRBAG OFF	“AIRBAG OFF” indicator light
	Headlight high beam indicator light
	Turn signal indicator lights
P R N D 2 L or P R N D 3 2 L	Automatic transmission indicator lights
O/D OFF	Overdrive–off indicator light

ECT SNOW	Snow mode indicator light
	Slip indicator light
TRAC OFF	Traction control system off indicator light
CRUISE	Cruise control indicator light*2

*1: For details, see “Service reminder indicators and warning buzzers” on page 129 in Section 1–6.

*2: If this light flashes, see “Cruise control” on page 159 in Section 1–7.

SECTION 1–10

OPERATION OF INSTRUMENTS AND CONTROLS

Other equipment

Multi–information display 258
Clock 259
Compass 260
Cigarette lighter and ashtrays 264
Power outlets 265
Power outlet 266
Glove box 267
Garage door opener 267
Auxiliary boxes 270
Container 272
Cup holders 273
Bottle holders 275
Tie–down hooks 275
Luggage cover 276
Roof luggage carrier 278
Floor mat 280

For information about the clock of a vehicle equipped with Navigation system, please refer to the separate “Navigation System Owner’s Manual”.

Multi–information display

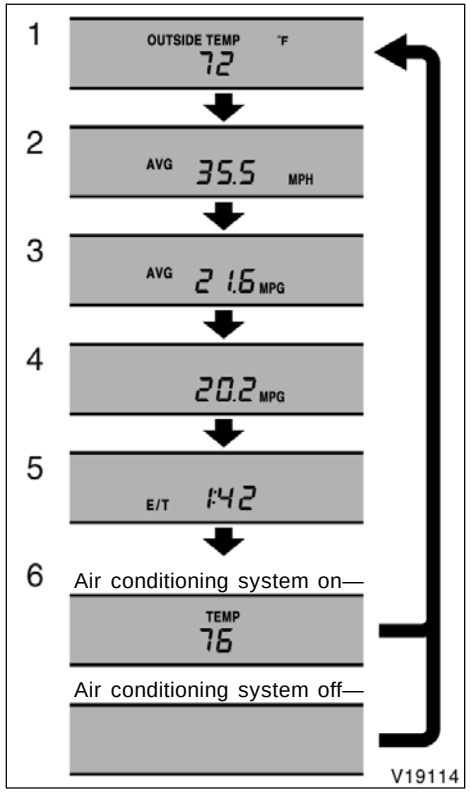

The multi–information display indicates the following information.

1. Outside temperature
2. Average vehicle speed
3. Average fuel consumption
4. Instantaneous fuel consumption
5. Driving time
6. Air conditioning system on—The air conditioned temperature is displayed.

   Air conditioning system off—The air conditioned temperature is not displayed.

Every time you push the “INFO” button, the display toggles through this information.

The displayed values in the multi–information display indicate general driving conditions. Accuracy varies with driving habits and road conditions.

You can adjust the air conditioned temperature while the multi–information is operating. 5 seconds has been passed after adjusting the temperature or pushing the “INFO” button, the display will be back to the multi–information display.

1. Outside temperature (“OUTSIDE TEMP”)

The outside temperature display indicates the outside air temperature.

The displayed temperature ranges from –22°F (–30°C) up to 122°F (50°C).

If there is some abnormality in the connection of the outside air temperature sensor, “––°F” (“––°C”) will appear on the display. If “––°F” (“––°C”) appears on the display, contact your Toyota dealer.

There may be a case that “––°F” (“––°C”) appears momentarily when the ignition is quickly turned to “ON”. It is normal if it goes out soon.

2. Average vehicle speed (“AVG MPH” or “AVG km/h”)

Average vehicle speed is calculated and displayed based on total driving distance and total driving time with the engine running.

The displayed value is updated every 10 seconds.

To reset the calculation, push the “INFO” button for more than 1 second.

3. Average fuel consumption (“AVG MPG” or “AVG L/100 km”)

Average fuel consumption is calculated and displayed based on total driving distance and total fuel consumption with the engine running.

The displayed value is updated every 10 seconds.

4. Instantaneous fuel consumption (“MPG” or “L/100 km”)

The instantaneous fuel consumption is calculated and displayed based on distance and fuel consumption for 1 seconds with the engine running.

The displayed value is updated every 2 seconds.

Note that an accurate figure may not be shown in the following cases.

- When the vehicle is stopped with the engine running, the display will indicate the extremely high fuel consumption.
- When the vehicle is driving down a long slope, applying the engine brake, the display will indicate the extremely low fuel consumption.

The calculation is reset when the ignition switch is turned off.

5. Driving time (“E/T”)

The elapsed time after the engine starts is displayed.

When the engine is started, driving time is counted from 0:00. Up to 11:59 (11 hours, 59 minutes) can be displayed. When the driving time exceeds 11:59, the counter returns to 0:00.

The calculation is reset when the ignition switch is turned off.

Clock

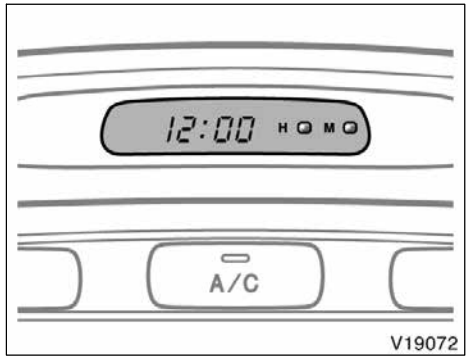

The digital clock indicates the time.

The key must be in the “ACC” or “ON” position.

To reset the hour: Push the “H” button.
To reset the minutes: Push the “M” button.

If the electrical power source has been disconnected from the clock, the time display will automatically be set to 1:00 (one o’clock).

Compass

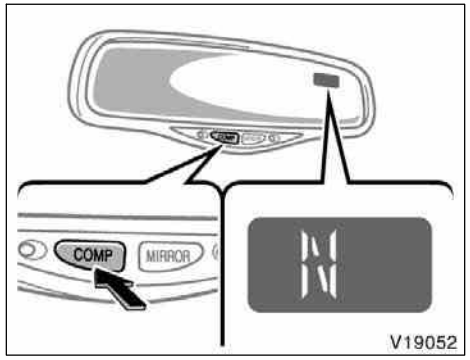

The direction is indicated on the inside rear view mirror.

If the ignition switch was turned off with the system on, the system will automatically turn back on when the ignition switch is turned on.

Push the “COMP” switch to turn the compass system on and off.

The compass indicates the direction that the vehicle is heading. In the above case, it shows that the vehicle is heading north.

Displays	Directions
N	North
NE	Northeast
E	East
SE	Southeast
S	South
SW	Southwest
W	West
NW	Northwest

The compass may not show the correct direction in the following conditions:

- The vehicle is stopped immediately after turning.
- The compass does not adjust while the vehicle is stopped.
- The ignition switch is turned off immediately after turning.
- The vehicle is on an inclined surface.
- The vehicle is in a place where the earth’s magnetic field is subject to interference by artificial magnetic fields (underground parking, under a steel tower, between buildings, roof parking, near a crossing, near a large vehicle, etc.).
- The vehicle is magnetized. (There is a magnet or a metal object on or near the inside rear view mirror.)
- The battery has been disconnected.

Your vehicle is out of the set zone. Refer to the “CALIBRATING THE COMPASS” below to set the zone number.

The compass works to calibrate the direction automatically while the vehicle is in motion, if deviation is small.

For additional precision or for complete calibrating, see “CALIBRATING THE COMPASS” below.

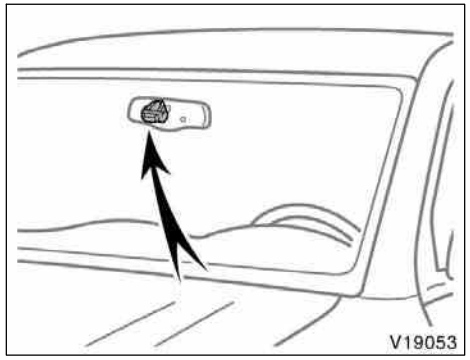

Compass sensor

The compass sensor is in the inside rear view mirror.

NOTICE
Do not put magnets or a metal object on or near the inside rear view mirror of the vehicle. Doing this may cause malfunction of the compass sensor.

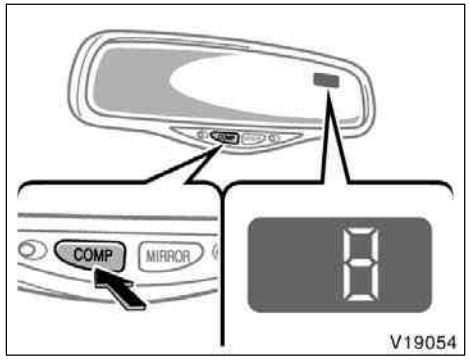

CALIBRATING THE COMPASS (deviation calibration)

The direction display on the compass deviates from the true direction determined by the earth’s magnetic field. The angle of deviation varies according to the geographic position of the vehicle.

To adjust this deviation, stop the vehicle, then push and hold the “COMP” switch until the zone number appears on the display. Then push the “COMP” switch, referring to the following map to select the number of the zone where the vehicle is.

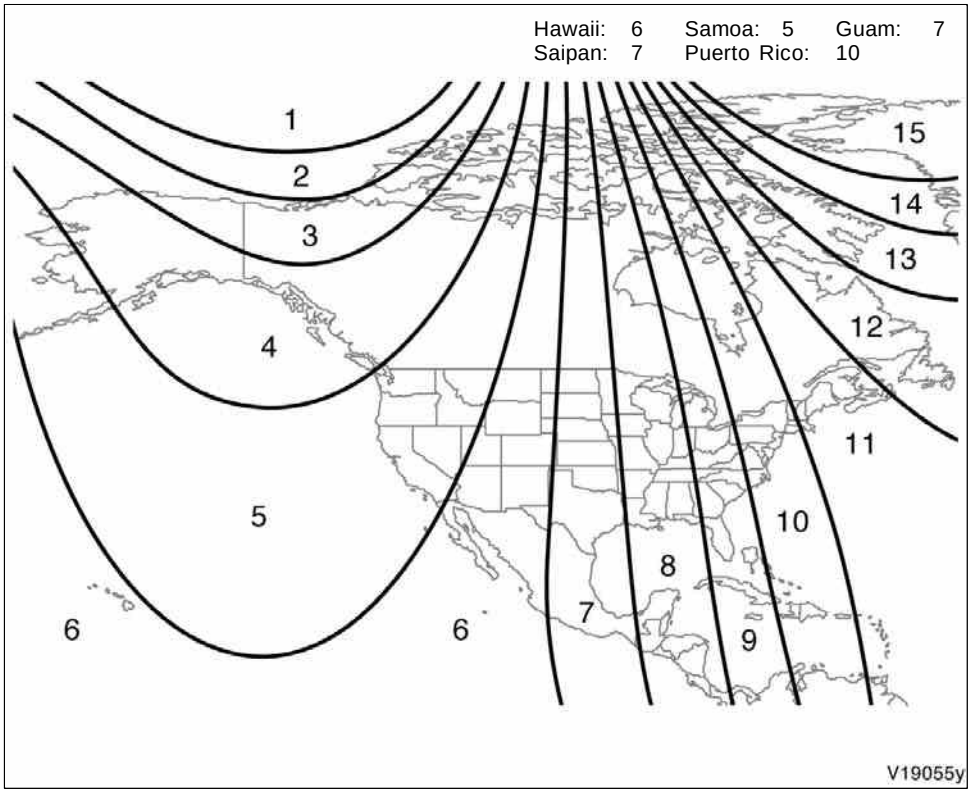

Zone number

After calibration, leaving the system for several seconds returns it to the compass mode.

⚠ CAUTION

Do not adjust the display while the vehicle is moving. Be sure to adjust the display only when the vehicle is stopped.

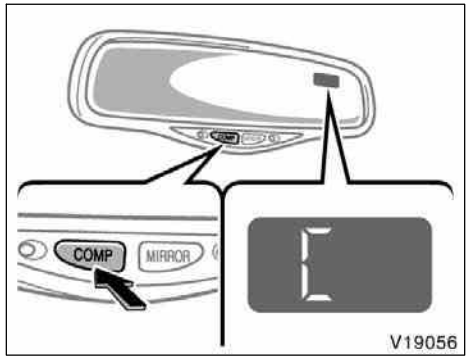

CALIBRATING THE COMPASS (circling calibration)

Sometimes the direction display on the compass may not change after a turn. To rectify this, stop the vehicle and push and hold the “COMP” switch until “C” appears on the display.

If “C” appears on the display because of a drastic change in the magnetic field, perform circling calibration.

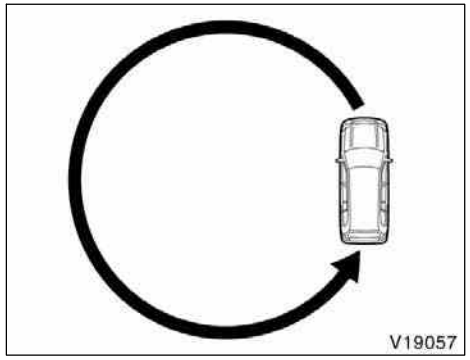

Drive the vehicle in a circle at 8 km/h (5 mph) or less. If there is not enough space to drive in a circle, drive around the block.

After driving 1 to 3 circles in the above method, calibration is completed when the direction is shown on the display.

If calibration cannot be performed because of the magnetized vehicle etc., take your vehicle to Toyota dealer.

Perform circling calibration just after you have purchased your Toyota. And then always perform circling calibration after the battery has been removed, replaced or disconnected.

- Do not perform circling calibration of the compass in a place where the earth’s magnetic field is subject to interference by artificial magnetic fields (underground parking, under a steel tower, between buildings, roof parking, near a crossing, near a large vehicle, etc.).
- During calibration, do not operate electric systems (moon roof, power windows, etc.) as they may interfere with the calibration.

CAUTION

- **When doing the circling calibration, be sure to secure a wide space, and watch out for people and vehicles in the neighborhood. Do not violate any local traffic rules while performing circling calibration.**
- **Do not adjust the display while the vehicle is moving. Be sure to adjust the display only when the vehicle is stopped.**

Cigarette lighter and ashtrays

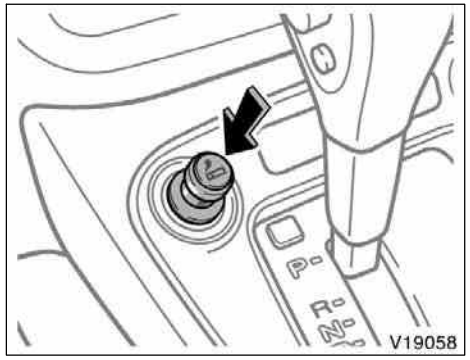

Cigarette lighter

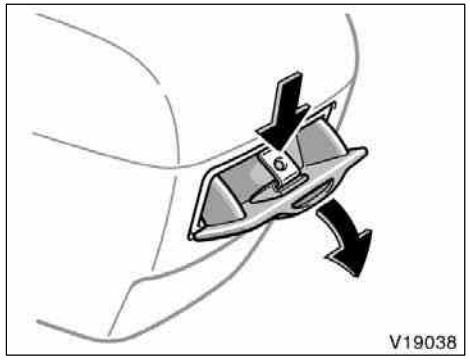

Rear ashtray

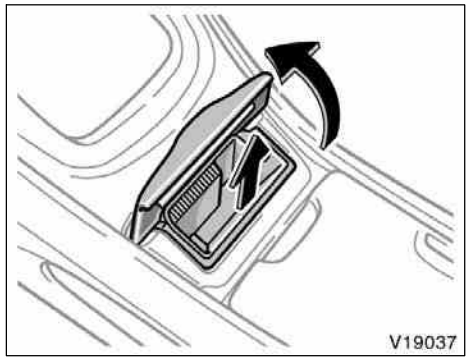

Front ashtray

CIGARETTE LIGHTER

To use the cigarette lighter, press it in. After it finishes heating up, it automatically pops out ready for use.

If the engine is not running, the key must be in the “ACC” position.

Do not hold the cigarette lighter pressed in.

Use a Toyota genuine cigarette lighter or equivalent for replacement.

ASHTRAYS

Front ashtray: To use the ashtray, open the lid.

When finished with your cigarette, thoroughly extinguish it in the ashtray to prevent other cigarette butts from catching fire. After using the ashtray, push it back in completely.

To remove the ashtray, pull the lid and pull it out.

Rear ashtray: To use the ashtray, pull it out.

When finished with your cigarette, thoroughly extinguish it in the ashtray to prevent other cigarette butts from catching fire. After using the ashtray, push it back in completely.

To remove the ashtray, press down on the lock spring plate and pull out.

⚠ CAUTION

To reduce the chance of injury in case of an accident or sudden stop while driving, always completely close the ashtray after use.

Power outlets (12 VDC)

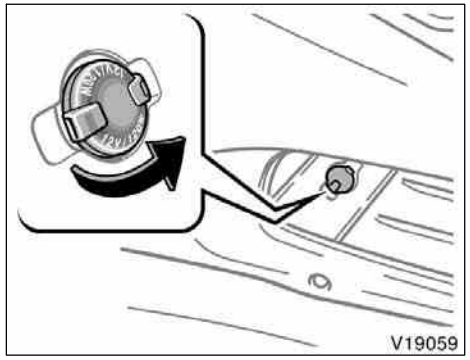

Front

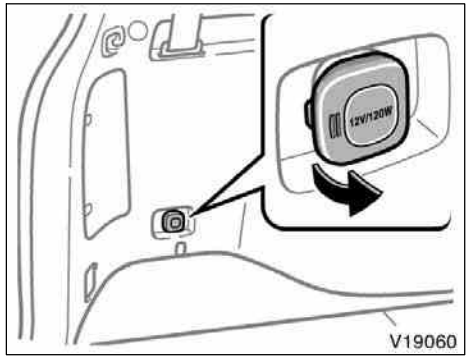

Rear

The power outlets (12 VDC) are designed for power supply for car accessories.

The key must be in the “ACC” or “ON” position for the power outlets to be used.

NOTICE

- ***To prevent the fuse from being blown, do not use the electricity over the total vehicle capacity of 12VDC/120W (front and rear outlets together).***
- ***To prevent the battery from being discharged, do not use the power outlets longer than necessary when the engine is not running.***
- ***Close the power outlet lids when the power outlets are not in use. Inserting a foreign object other than the appropriate plug that fits the outlet, or allowing any liquid into the outlet may cause electrical failure or short circuits.***

Power outlet (115 VAC)

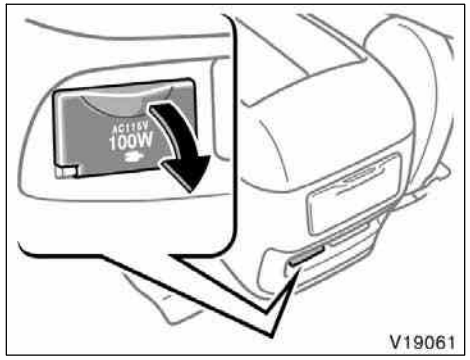

This power outlet (115 VAC) is designed for use as a power supply for electric appliances in the vehicle.

The key must be in the “ON” position for the power outlet to be used.

The maximum capacity for this power outlet is 115 VAC/100W. If you attempt to use an appliance that requires more than 115 VAC or 100W, the protection circuit will activate and cut the power supply. The power supply will restart automatically when you use an appliance that operates within the 115 VAC/100W limits.

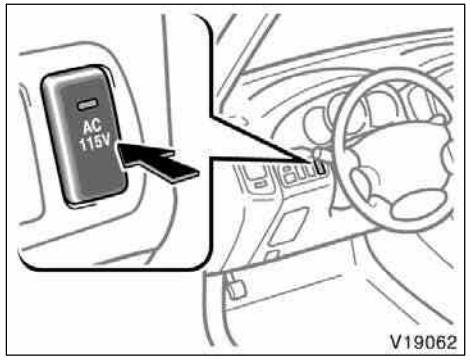

Main switch

To use the power outlet, push the main switch on the instrument panel.

An indicator light will illuminate to indicate that the power outlet is ready for use.

Push the main switch once again to turn the power outlet off. When the power outlet is not in use, make sure that the main switch is turned off.

NOTICE

- ***To prevent the battery from being discharged, do not use the power outlet longer than necessary when the engine is not running.***
- ***Close the power outlet lid when the power outlet is not in use. Inserting a foreign object other than the appropriate plug that fits the outlet may cause electrical failure or short circuits.***

The power outlet is not designed for the following electric appliances even though their power consumption is under 115 VAC/100W. These appliances may not operate properly.

- Appliances with high initial peak wattage: cathode–ray tube type televisions, compressor–driven refrigerators, electric pumps, electric tools, etc.
- Measuring devices which process precise data: medical equipment, measuring instruments, etc.
- Other appliances requiring an extremely stable power supply: microcomputer–controlled electric blankets, touch sensor lamps, etc.

Certain electrical appliances may cause radio noise.

Glove box

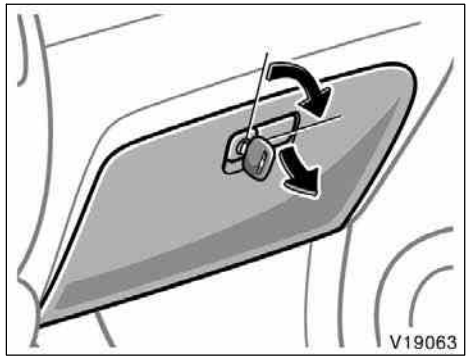

To use the glove box, do this.

To open: Pull the lever.

With the instrument panel lights on, the glove box light will come on when the globe box is open.

To lock: Insert the master key and turn it clockwise.

⚠ CAUTION

To reduce the chance of injury in case of an accident or a sudden stop, always keep the glove box door closed while driving.

Garage door opener

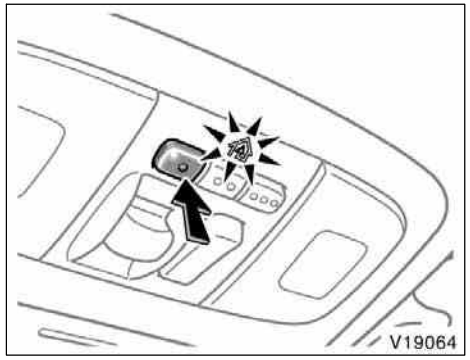

The garage door opener (HomeLink® Universal Transceiver) is manufactured under license from HomeLink® and can be programmed to operate garage doors, gates, entry doors, door locks, home lighting systems, and security systems, etc.

(a) Programming the HomeLink®

The HomeLink® in your vehicle has 3 buttons and you can store one program for each button.

To ensure correct programming into the HomeLink®, install a new battery in the hand–held transmitter prior to programming.

The battery side of the hand–held transmitter must be pointed away from the HomeLink® during the programming process.

For Canadian users, follow the procedure in “Programming an entrance gate/programming all devices in the Canadian market”.

1. Decide which of 3 HomeLink® buttons you want to program.
2. Place your hand–held garage transmitter 25 to 75 mm (1 to 3 in.) away from the surface of the HomeLink®.

Keep the indicator light on the HomeLink® in view while programming.

3. Simultaneously press and hold the hand–held garage transmitter button along with the selected HomeLink® button.
4. When the indicator light on the HomeLink® changes from a slow to a rapid flash after 20 seconds, you can release both buttons.
5. Test the operation of the HomeLink® by pressing the newly programmed button. If programming a garage door opener, check to see if the garage door opens and closes.

If the garage door does not operate, identify if your garage transmitter is of the “Rolling Code” type. Press and hold the programmed HomeLink® button. The garage door has the rolling code feature if the indicator light (on the HomeLink®) flashes rapidly and then remains lit after 2 seconds. If your garage transmitter is the “Rolling Code” type, proceed to the heading “Programming a rolling code system”.

6. Repeat steps 2 through 5 for each remaining HomeLink® button to program another device.

Programming a rolling code system

If your device is “Rolling Code” equipped, it is necessary to follow steps 1 through 4 under the heading “Programming the HomeLink®” before proceeding with the steps listed below.

1. Locate the “training” button on the ceiling mounted garage door opener motor. The exact location and color of the button may vary by brand of garage door opener. Refer to the owner’s guide supplied by the garage door opener manufacturer for the location of this “training” button.
2. Press the “training” button on the ceiling mounted garage door opener motor.

Following this step, you have 30 seconds in which to initiate step 3 below.

3. Press and release the vehicle’s programmed HomeLink® button twice. The garage door may open. If the door does open, the programming process is complete. If the door does not open, press and release the button a third time. This third press and release will complete the programming process by opening the garage door.

The ceiling mounted garage door opener motor should now recognize the HomeLink® unit and be able activate the garage door up/down.

4. Repeat steps 1 through 3 for each remaining HomeLink® button to program another rolling code system.

Programming an entrance gate/programming all devices in the Canadian market

1. Decide which of the 3 HomeLink® buttons you want to program.
2. Place your hand–held gate/device transmitter 25 to 75 mm (1 to 3 in.) away from the surface of the HomeLink®.

Keep the indicator light on the HomeLink® in view while programming.

3. Press and hold the selected HomeLink® button.
4. Continuously press and release (cycle) the hand–held gate/device transmitter button every two seconds until step 5 is complete.
5. When the indicator light on the HomeLink® changes from a slow to a rapid flash after 20 seconds, you can release both buttons.
6. Test the operation of the HomeLink® by pressing the newly programmed button. Check to see if the gate/device operates correctly.
7. Repeat steps 1 through 6 for each remaining HomeLink® button to program another device.

Programming other devices

To program other devices such as home security systems, home door locks or lighting, contact your authorized Toyota dealer for assistance.

Reprogramming a button

Individual HomeLink® buttons cannot be erased, however, to reprogram a single button, follow the procedure “Programming the HomeLink®”.

(b) Operating the HomeLink®

To operate the HomeLink®, press the appropriate HomeLink® button to activate the programmed device. The HomeLink® indicator light should come on. The HomeLink® continues to send the signal for up to 20 seconds as long as the button is pressed.

(c) Erasing the entire HomeLink® memory (all three programs)

To erase all previously programmed codes at one time, press and hold down the 2 outside buttons for 20 seconds until the indicator light flashes.

If you sell your vehicle, be sure to erase the programs stored in the HomeLink® memory.

CAUTION

- **When programming the HomeLink® Universal Transceiver, you may be operating a garage door or other device. Make sure people and objects are out of the way of the garage door or other device to prevent potential harm or damage.**
- **Do not use this HomeLink® Universal Transceiver with any garage door opener that lacks the safety stop and reverse feature as required by federal safety standards. (This includes any garage door opener model manufactured before April 1, 1982.) A garage door opener which cannot detect an object (signaling the door to stop and reverse), does not meet current federal safety standards. Using a garage door opener without these features increases risk of serious injury or death.**

This device complies with Part 15 of the FCC Rules and with RSS–210 of the Industry Canada. Operation is subject to the following two conditions: (1) This device may not cause harmful interference, and (2) this device must accept any interference received, including interference that may cause undesired operation.

WARNING: This transmitter has been tested and complies with FCC and Industry Canada DOC/MPAC rules. Changes or modifications not expressly approved by the party responsible for compliance could void the use’s authority to operate the device.

Auxiliary boxes

To use the auxiliary boxes, open the lids as shown in the following illustrations.

CAUTION

- **To reduce the chance of injury in case of an accident or sudden stop, always keep the auxiliary box closed while driving.**
- **Type A—It is designed for holding a light objects, do not place any heavy objects in it. Heavy objects may cause the holder to open and contents to fly out resulting in injuries.**

NOTICE

Type A—During hot weather, the interior of the vehicle becomes very hot. Do not leave anything flammable or deformable such as a lighter, glasses, etc. inside.

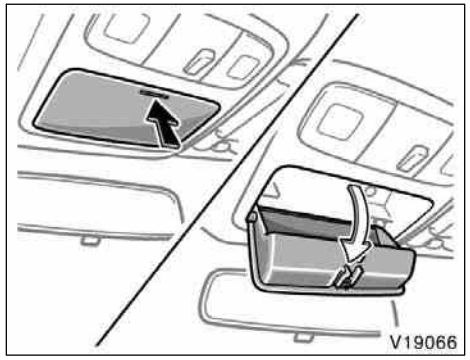

Type A (ceiling)

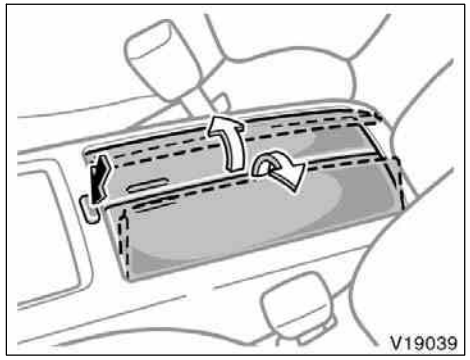

Type C (rear console)

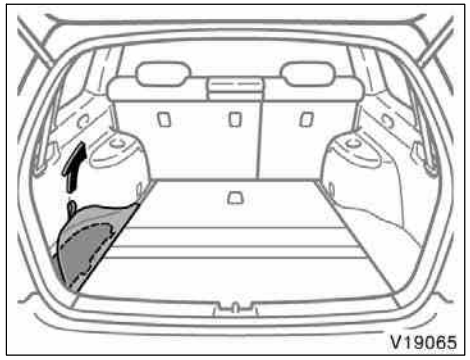

Type E (luggage compartment)

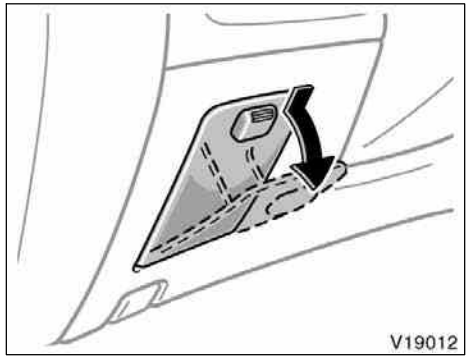

Type B (instrument panel)

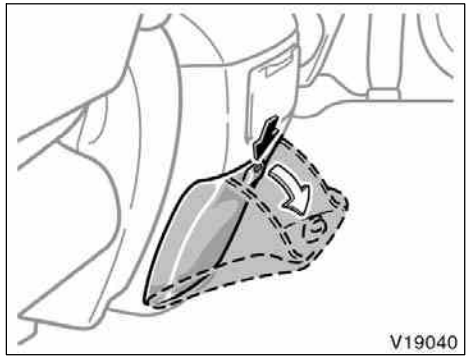

Type D (rear console)

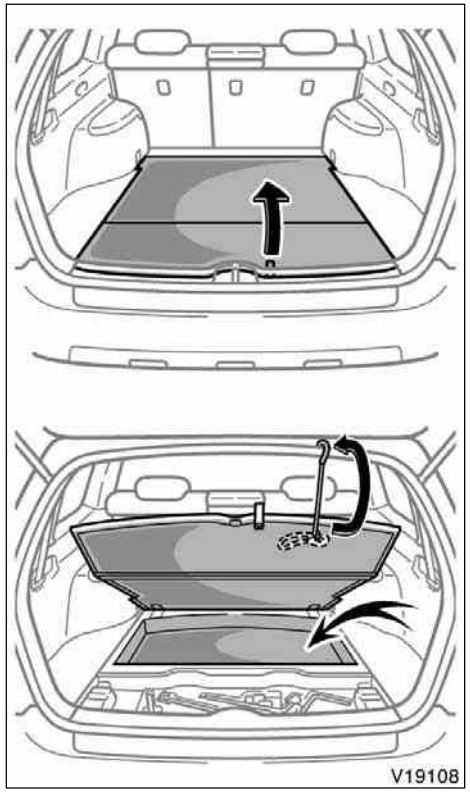

Type F (luggage compartment)

Container

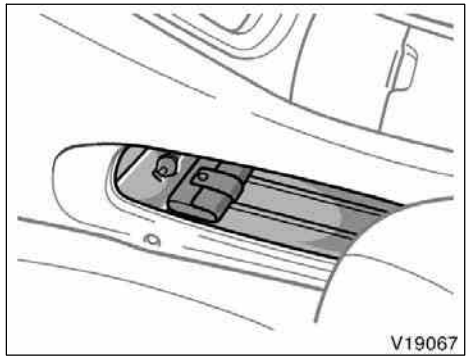

This container can be used as an auxiliary holder.

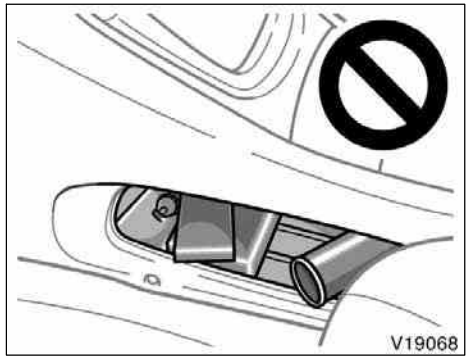

⚠ CAUTION

Do not put objects in the container which can shift, roll out or be thrown out in the event of sudden stops or accidents. Objects which come out of the container can create a safety hazard due to interference with pedal operation or driver distraction.

- **Do not store drinks or cans which could easily roll out.**

Cup holders

- **Do not store objects which are higher than the lower edge of the container.**
- **Do not store objects which are larger than the width of the container.**

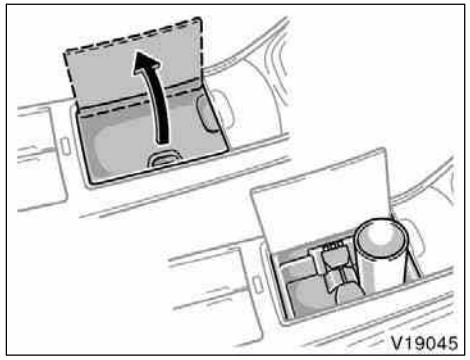

Type A (rear console)

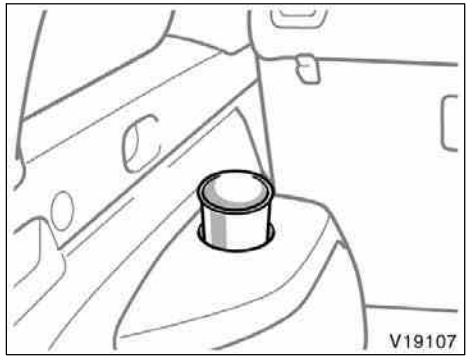

Type B (luggage compartment)

Type C (second seat armrest)

The cup holders are designed for holding cups or drink–cans securely.

Type A—To use the holder, open the lid.

Type C—To use the holder, pull down the second seat armrest and push the button on the armrest.

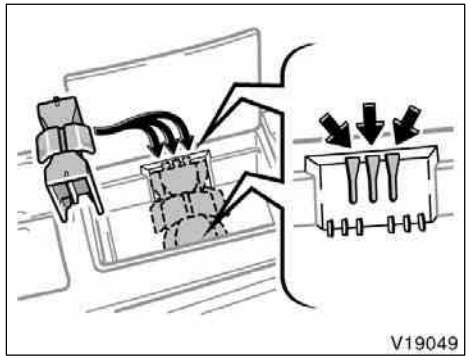

Type A only—

The cup holder can be adjustable to the size of the cups or drink–cans by changing the holder position.

⚠ CAUTION

- **Do not place anything else other than cups or drink–cans in the cup holder, as such items may be thrown about in the compartment and possibly injure people in the vehicle during sudden braking or in an accident.**
- **Type A and C—To reduce the chance of injury in case of an accident or sudden stop while driving, keep the cup holder closed when it is not in use.**

Bottle holders

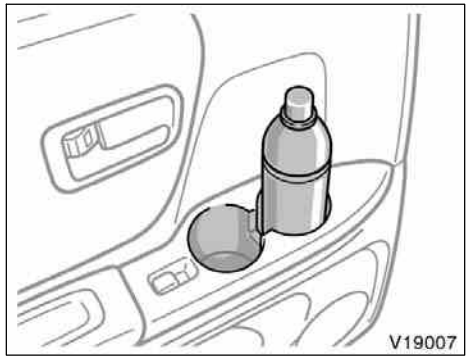

The bottle holders are designed to hold bottles securely.

⚠ CAUTION

Do not attempt to use the holder for any other purpose for which it was intended. Inappropriately sized or shaped objects may be thrown about in the compartment and possibly injure people in the vehicle during a sudden braking or an accident.

NOTICE

Do not put a cup or open bottle in the bottle holder because the contents may spill when the door opens or closes.

Tie–down hooks

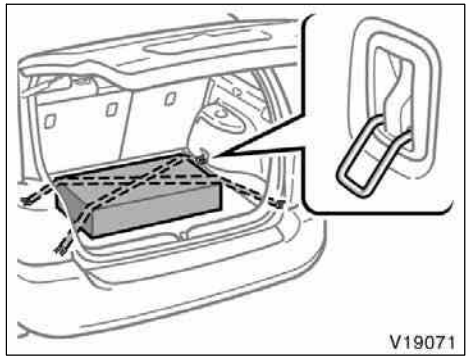

To secure your luggage, use the tie–down hooks as shown above.

See “—Stowage precautions” on page 305 in Section 2 for precautions when loading luggage.

⚠ CAUTION

To avoid personal injury, keep the tie–down hooks folded in place on the floor when not in use.

Vehicles with the third seat—When using the tie–down hooks, the third seat must be folded down. (See “—Folding down third seat” on page 47 in Section 1–3.)

Luggage cover

NOTICE

Do not use the anchor brackets on the second seat seatback instead of the tie–down hooks.

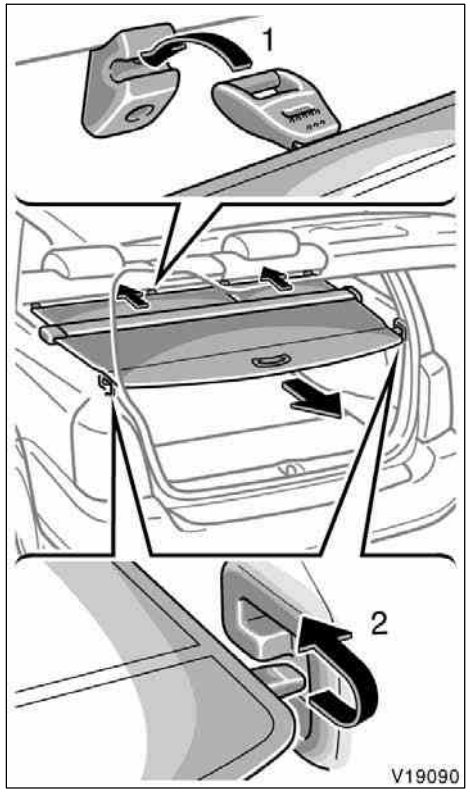

USING LUGGAGE COVER

To use the luggage cover:

1. **Pull out the forward luggage cover and hang the hooks to the hook brackets on the second seat seat-back.**
2. **Pull out the rear luggage cover and secure it to the hook brackets.**

⚠ CAUTION

Do not place anything on the luggage cover. Such items may be thrown about and possibly injure people in the vehicle during sudden braking or an accident.

Vehicles with the third seat—When using the luggage cover, the third seat must be folded down. (See “—Folding down third seat” on page 47 in Section 1–3.)

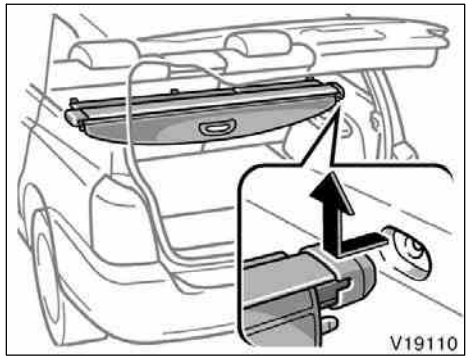

REMOVING LUGGAGE COVER

To remove the luggage cover, push in the left end to release the right end, and lift the luggage cover out.

After you remove the luggage cover, stow it under deck board as described below. This will prevent passengers from injury in the event of a sudden stop or accident.

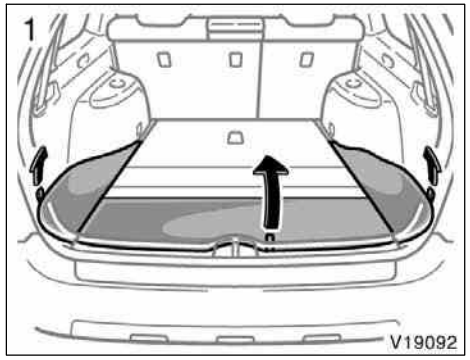

STOWING LUGGAGE COVER

To stow the luggage cover, do the following.

1. **Remove the side deck boards and open the center deck board.**

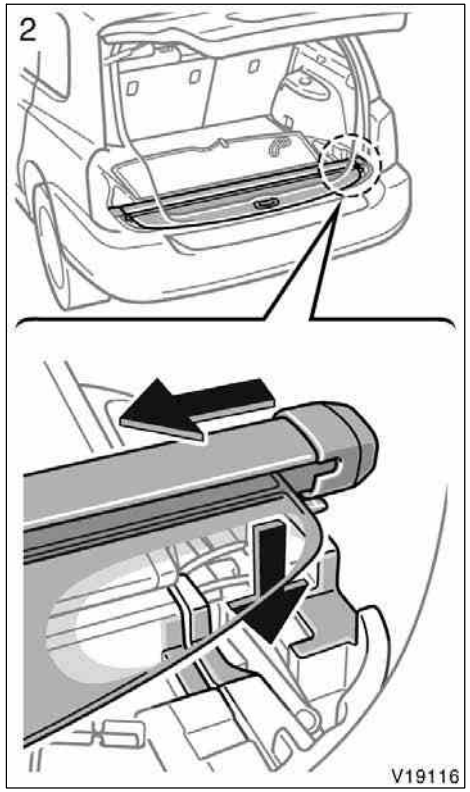

2. **Push in the left end of the luggage cover and place the luggage cover in the holder as shown.**

⚠ CAUTION

Make sure the luggage cover is securely stowed.

Roof luggage carrier

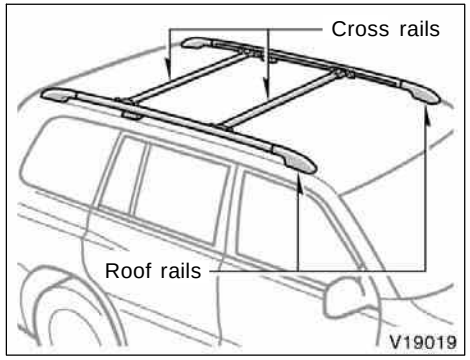

The roof luggage carrier consists of roof rails and sliding cross rails.

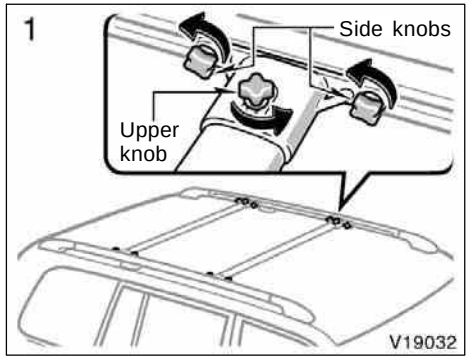

ADJUSTING THE POSITION OF CROSS RAILS:

1. **Turn the upper and side knobs counterclockwise to loosen the cross rails.**

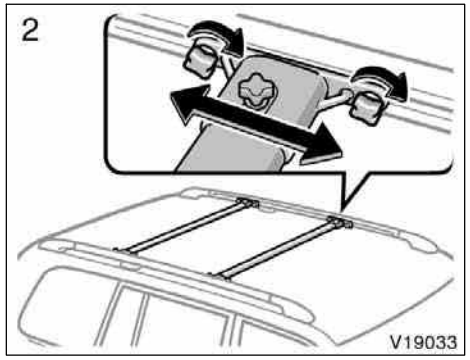

2. Slide the cross rails to the appropriate position for loading the luggages and turn the side knobs clockwise to tighten the cross rails securely.

Vehicles with the electric moon roof—There are cross rail stoppers on the roof rails which help you prevent the cross rails being touched with the tilted up moon roof.

NOTICE

Vehicles with the electric moon roof only—Do not remove the cross rail stoppers, or the moon roof may be damaged when it is tilted.

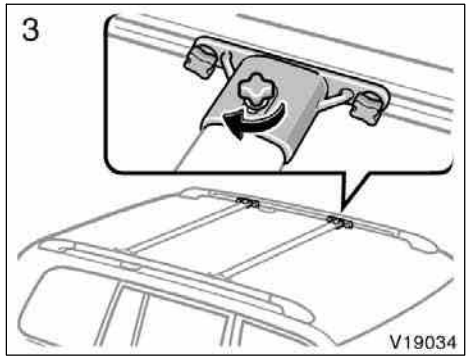

3. In order to fix the cross rails to the appropriate length, turn the upper knobs clockwise after tightening all of the side knobs.

CAUTION

Make sure the cross rails are fixed securely by pushing forward and rearward them. Failure to do so may cause an unexpected accident or severe injury in the event of emergency braking or a collision.

Follow the manufacture’s instructions and precautions when installing the attachments or their equivalent.

CAUTION

When you load cargo on the roof luggage carrier, observe the following:

- **Place the cargo so that its weight is distributed evenly between the front and rear axles.**
- **If loading long or wide cargo, never exceed the vehicle overall length or width. (See “Dimensions and weights” on page 398 in Section 8 for information on your vehicle overall length and width.)**
- **Before driving, make sure the cargo is securely fastened on the roof luggage carrier.**
- **Loading cargo on the roof luggage carrier will make the center of the vehicle gravity higher. Avoid high speeds, sudden starts, sharp turns, sudden braking or abrupt maneuvers, otherwise it may result in loss of control or vehicle rollover due to failure to operate this vehicle correctly.**

- **If driving for a long distance, on rough roads, or at high speeds, stop the vehicle now and then during the trip to make sure the cargo remains in its place.**
- **Do not exceed 45 kg (100 lb.) cargo weight on the roof luggage carrier.**

NOTICE

When loading the luggages, be careful not to scratch the surface of the moon roof.

Floor mat

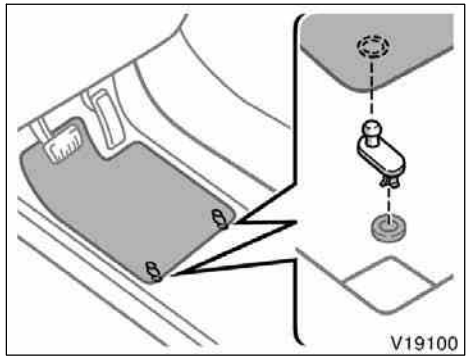

Use a floor mat of the correct size.

If the floor carpet and floor mat have 2 holes, then they are designed for use with locking clips. Fix the floor mat with locking clips into the holes in the floor carpet.

⚠ CAUTION

Make sure the floor mat is properly placed on the floor carpet. If the floor mat slips and interferes with the movement of the pedals during driving, it may cause an accident.

SECTION 1–2

OPERATION OF INSTRUMENTS AND CONTROLS

Keys and Doors

Keys 12
Engine immobilizer system 15
Side doors 16
Power windows 24
Back door 27
Hood 28
Theft deterrent system 29
Fuel tank cap 31
Electric moon roof 33

Keys (without engine immobilizer system)

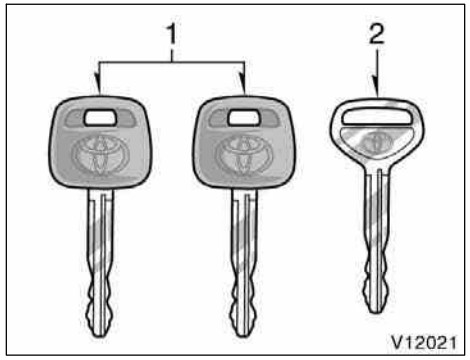

Your vehicle is supplied with two kinds of keys.

1. Master keys—These keys work in every lock.
2. Sub key—This key will not work in the glove box.

To protect items locked in the glove box when using valet parking, leave the sub key with the attendant.

Since the side doors can be locked without a key, you should always carry a spare key in case you accidentally lock your keys inside the vehicle.

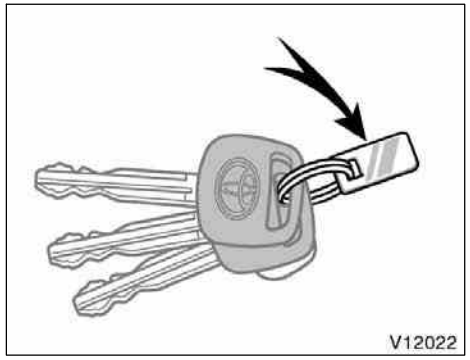

KEY NUMBER PLATE

Your key number is shown on the plate. Keep the plate in a safe place such as your wallet, not in the vehicle.

If you should lose your keys or if you need additional keys, duplicates can be made by a Toyota dealer using the key number.

We recommend writing down the key number and storing it in a safe place.

Keys (with engine immobilizer system)

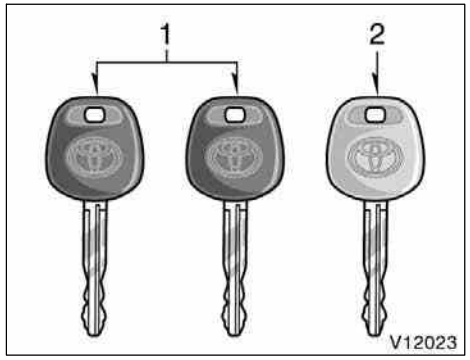

Your vehicle is supplied with two kinds of keys.

1. Master keys (black)—These keys work in every lock. Your Toyota dealer will need one of them to make a new key with a built–in transponder chip.
2. Sub key (gray)—This key will not work in the glove box.

A transponder chip for engine immobilizer system has been placed in the head of the master and sub keys. These chips are needed to enable the system to function correctly, so be careful not to lose these keys. If you make your own duplicate key, you will not be able to cancel the system or start the engine.

To protect items locked in the glove box when using valet parking, leave the sub key with the attendant.

Since the side doors can be locked without a key, you should always carry a spare key in case you accidentally lock your keys inside the vehicle.

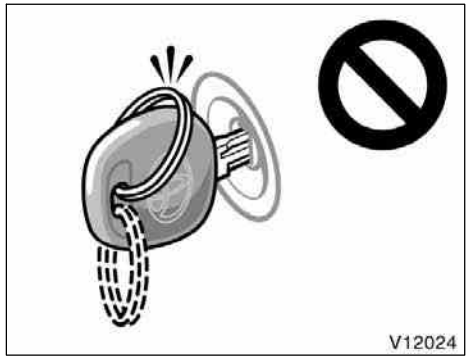

NOTICE

When using a key containing a transponder chip, observe the following precautions:

- ***When starting the engine, do not use the key with a key ring resting on the key grip and do not press the key ring against the key grip. Otherwise the engine may not start, or may stop soon after it starts.***
- ***When starting the engine, do not use the key with other transponder keys around (including keys of other vehicles) and do not press other key plates against the key grip. Otherwise the engine may not start, or may stop soon after it starts. If this happens, remove the key once and then insert it again after removing other transponder keys (including keys of other vehicles) from the ring or while gripping or covering them with your hand to start the engine.***

◆*Do not bend the key grip.*

◆*Do not cover the key grip with any material that cuts off electromagnetic waves.*

◆*Do not knock the key hard against other objects.*

◆*Do not leave the key exposed to high temperatures for a long period, such as on the dashboard and hood under the direct sunlight.*

◆*Do not put the key in water or wash it in an ultrasonic washer.*

◆*Do not use the key with electromagnetic materials.*

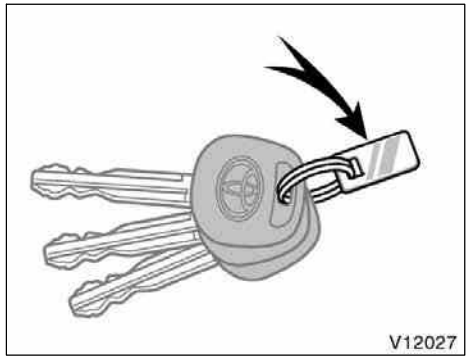

KEY NUMBER PLATE

Your key number is shown on the plate. Keep the plate in a safe place such as your wallet, not in the vehicle.

If you should lose your keys or if you need additional keys, duplicates can be made by a Toyota dealer using the key number.

We recommend writing down the key number and storing it in a safe place.

Engine immobilizer system

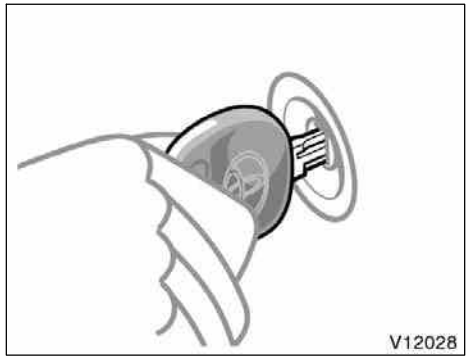

The engine immobilizer system is a theft prevention system. When you insert the key in the ignition switch, the transponder chip in the key’s head transmits an electronic code to the vehicle. The engine will start only when the electronic code in the chip corresponds to the registered ID code for the vehicle.

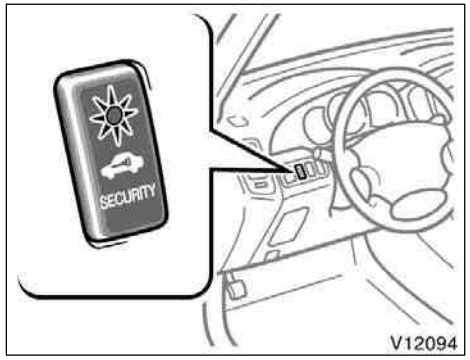

The system is automatically set when the key is removed from the ignition switch. The indicator light will start flashing to show the system is set.

In the following cases, contact your Toyota dealer.

- The indicator light stays on.
- The indicator light does not start flashing when the key is removed from the ignition switch.
- The indicator light flashes unsteady.

Inserting the registered key in the ignition switch automatically cancels the system, which enables the engine to start. The indicator light will go off.

For your Toyota dealer to make you a new key with built–in transponder chip, your dealer will need your key number and master key. However, there is a limit to the number of additional keys your Toyota dealer can make for you.

If you make your own duplicate key, you will not be able to cancel the system or start the engine.

NOTICE
Do not modify, remove or disassemble the engine immobilizer system. If any unauthorized changes or modifications are made, the proper operation of the system cannot be guaranteed.

For vehicles sold in U.S.A.

This device complies with Part 15 of the FCC Rules. Operation is subject to the following two conditions:

(1) this device may not cause harmful interference, and (2) this device must accept any interference received, including interference that may cause undesired operation.

CAUTION

Changes or modifications not expressly approved by the party responsible for compliance could void the user’s authority to operate the equipment.

For vehicles sold in Canada

This device complies with RSS–210 of Industry Canada. Operation is subject to the following two conditions:

(1) this device may not cause interference, and (2) this device must accept any interference, including interference that may cause undesired operation of the device.

Side doors—

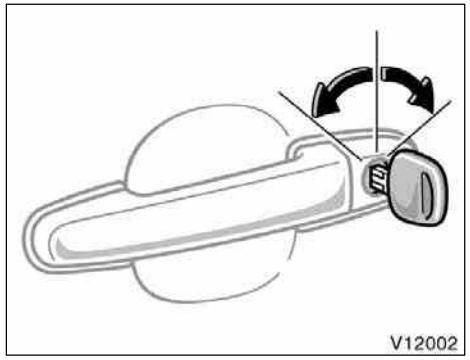

LOCKING AND UNLOCKING WITH KEY

Insert the key into the keyhole and turn it.

To lock: Turn the key forward.
To unlock: Turn the key backward.

All the side doors and back door lock and unlock simultaneously with either front door. In the driver’s door lock, turning the key once will unlock the driver’s door and twice in succession will unlock all the side doors and back door simultaneously.

This double key turning operation to unlock all the side doors and back door can be changed to a single key turning operation. For details, contact your Toyota dealer.

When all the side doors and back door are unlocked simultaneously using a key, the center interior light, personal lights and ignition switch light will come on and remain on for about 15 seconds before fading out. (For further information, see “Interior lights” on page 118, “Personal lights” on page 119 and “Ignition switch light” on page 120 in Section 1–5.)

The driver’s window can be opened or closed with the key operation in the driver’s door keyhole. (For details, see “Power windows” on page 24 in this Section.)

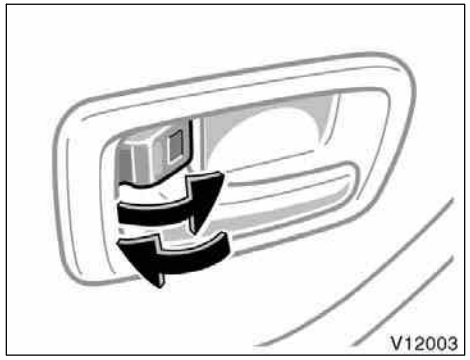

LOCKING AND UNLOCKING WITH INSIDE LOCK KNOB

Move the lock knob.

To lock: Push the knob forward.
To unlock: Pull the knob backward.

Closing the side door with the lock knob in the lock position will also lock the side door. Be careful not to lock your keys in the vehicle.

The front doors cannot be locked if you leave the key in the ignition switch and the driver’s door is opened.

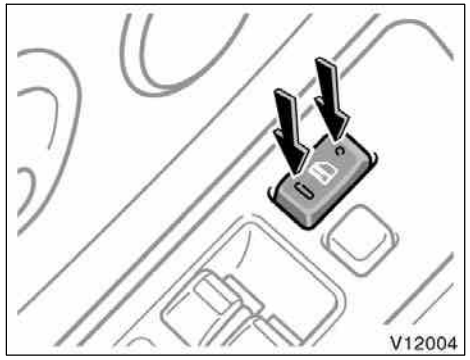

Driver’s side

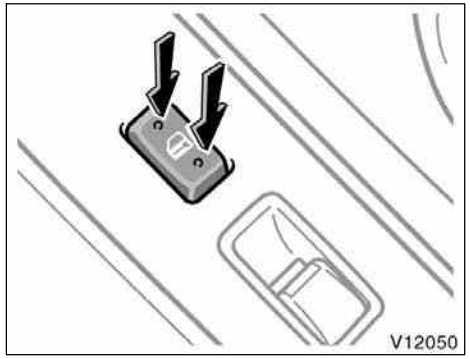

Passenger’s side

LOCKING AND UNLOCKING WITH POWER DOOR LOCK SWITCH

Push the switch.

To lock: Push the switch down on the front side.
To unlock: Push the switch down on the rear side.

Operating the switch simultaneously locks or unlocks all the side doors and back door.

If you do either of the following, no side door or back door can be unlocked with the power door lock switch.

- Lock all the side doors and back door with the key or wireless remote control transmitter when all the side doors and back door are closed.
- Open the driver’s door or front passenger’s door and move the inside lock knobs of both front doors to the lock position, then close the front doors.

The power door lock switch can be reset in the following ways.

- Turn the ignition key to “ON”.
- Unlock all the side doors and back door with the key or wireless remote control transmitter.
- Unlock the driver’s door or front passenger’s door with the inside lock knob, and then unlock all the doors and back door with the power door lock switch.

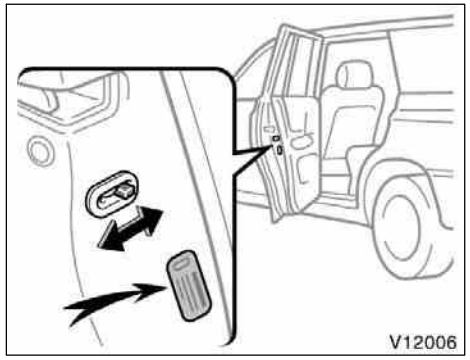

REAR DOOR CHILD–PROTECTORS

Move the lock lever to the “LOCK” position as shown on the label.

This feature allows you to lock a rear door so it can be opened from the outside only, not from inside. We recommend using this feature whenever small children are in the vehicle.

⚠ CAUTION

Before driving, be sure that the doors are closed and locked, especially when small children are in the vehicle. Along with the proper use of seat belts, locking the doors helps prevent the driver and passengers from being thrown out from the vehicle during an accident. It also helps prevent the doors from being opened unintentionally.

—Wireless remote control

Locking operation

Unlocking operation

The wireless remote control system is designed to lock or unlock all the side doors and back door, or activate the “PANIC” mode from a distance within approximately 1 m (3 ft.) of the vehicle.

LOCKING AND UNLOCKING THE SIDE DOORS AND BACK DOOR

To lock and unlock all the side doors and back door, push the switches of the transmitter slowly and securely.

To lock: Push the “LOCK” switch. All the side doors and back door are locked simultaneously. At this time, one beep will be heard, and the turn signal lights flash once.

Check to see that all the side doors and back door are securely locked.

If any of the side doors or back door is not securely closed, locking cannot be performed by the “LOCK” switch and a beep will sound continuously for 10 seconds. However, if the key is in the ignition, a beep will not sound.

To stop the beep, close all the side doors and back door securely or push the “UNLOCK” switch.

The beep can be disabled. For details, contact your Toyota dealer.

To unlock: Push the “UNLOCK” switch once to unlock the driver’s door alone. Pushing the switch twice within 3 seconds unlocks all the side doors and back door simultaneously. Each time the “UNLOCK” switch is pushed, two beeps will be heard, and the turn signal lights flash twice.

This double switch operation to unlock all the side doors and back door can be changed to a single switch operation. For details, contact your Toyota dealer.

When all the side doors and back door are unlocked simultaneously with a wireless remote control transmitter, the center interior light, personal lights and ignition switch light come on for about 15 seconds before fading out, even if the door is not opened. (For details, see “Interior lights” on page 118, “Personal lights” on page 119 and “Ignition switch light” on page 120 in Section 1–5.)

You have 30 seconds to open a door after using the wireless remote unlock feature. If a door is not opened by then, all the side doors and back door will be automatically locked again. At this time, one beep will be heard, and the turn signal lights flash once.

The timing for the automatic door lock function can be changed. For details, contact your Toyota dealer.

If the “LOCK” or “UNLOCK” switch is kept pressed in, the locking or unlocking operation is not repeated. Release the switch and then push again.

The wireless door locking or unlocking function can be erased. For details, contact your Toyota dealer.

SWITCHING BEEP SOUND ON AND OFF

You can switch the beep on and off. (The beep is on initially and after battery replacement.)

To switch the beep on and off:

With the driver’s door opened—

1. Insert the ignition key and remove it.
2. Within 5 seconds, insert the ignition key again and turn it to the “ON” position.
3. After 10 seconds, push the same “LOCK”, “UNLOCK” or “PANIC” switch twice within 10 seconds.
   Two beep sounds inform you that the program has been switched on or off.

If this procedure is not followed exactly, the beep will not operate as expected.

Check the beep ON/OFF operation by pushing the transmitter switch after you finish this procedure. If the beep does not operate as expected, repeat this procedure from step 1.

“PANIC” SWITCH

Pushing the “PANIC” switch blows the horn intermittently and flashes the headlights and tail lights.

The “PANIC” switch is used to deter vehicle theft when you witness anyone attempting to break into or damage your vehicle.

The alarm will last for one minute. To stop alarm midway, do the following:

- Push the “PANIC” switch once again.
- Unlock any of side door or back door with the key or wireless remote control transmitter.
- Turn the ignition key from the “LOCK” to “ON” position.

The “PANIC” mode does not work when the ignition key is in the “ON” position.

The alarm function can be disabled. For details, contact your Toyota dealer.

WIRELESS REMOTE CONTROL TRANSMITTER

The wireless remote control transmitter is an electronic component. Observe the following instructions in order not to cause damage to the transmitter.

- Do not leave the transmitter on places where the temperature becomes high such as on the dashboard.
- Do not disassemble it.
- Avoid knocking it hard against other objects or dropping it.
- Avoid putting it in water.

You can use up to 4 wireless remote control transmitters for the same vehicle. Contact your Toyota dealer for detailed information.

If the wireless remote control transmitter does not actuate the side doors and back door or alarm, or operate from a normal distance:

- Check for closeness to a radio transmitter such as a radio station or an airport which can interfere with normal operation of the transmitter.
- The battery may have been consumed. Check the battery in the transmitter. To replace the battery, see “REPLACING TRANSMITTER BATTERY”.

If you lose your transmitter, contact your Toyota dealer as soon as possible to avoid the possibility of theft, or an accident. (See “If you lose your wireless remote control transmitter” on page 347 in Section 4.)

For vehicles sold in U.S.A.

This device complies with Part 15 of the FCC Rules. Operation is subject to the following two conditions:

(1) This device may not cause harmful interference, and (2) this device must accept any interference received, including interference that may cause undesired operation.

NOTICE:
This equipment has been tested and found to comply with the limits for a Class B digital device, pursuant to Part 15 of the FCC Rules. These limits are designed to provide reasonable protection against harmful interference in a residential installation. This equipment generates, uses and can radiate radio frequency energy and, if not installed and used in accordance with the instructions, may cause harmful interference to radio communications. However, there is no guarantee that interference will not occur in a particular installation. If this equipment does cause harmful interference to radio or television reception, which can be determined by turning the equipment off and on, the user is encouraged to try to correct the interference by one or more of the following measures:

- Reorient or relocate the receiving antenna.
- Increase the separation between the equipment and receiver.
- Connect the equipment into an outlet on a circuit different from that to which the receiver is connected.
- Consult the dealer or an experienced radio/TV technician for help.

FCC WARNING:
Changes or modifications not expressly approved by the party responsible for compliance could void the user’s authority to operate the equipment.

For vehicles sold in Canada

Operation is subject to the following two conditions:

(1) this device may not cause interference, and (2) this device must accept any interference, including interference that may cause undesired operation of the device.

REPLACING TRANSMITTER BATTERY

For replacement, use a CR2016 lithium battery or equivalent.

⚠ CAUTION

Special care should be taken to prevent small children from swallowing the removed transmitter battery or components.

NOTICE

- ***When replacing the transmitter battery, be careful not to lose the components.***
- ***Replace only with the same or equivalent type recommended by a Toyota dealer.***
- ***Dispose of used batteries according to the local laws.***

Replace the transmitter battery by following these procedures:

1. Using a coin or equivalent, open the transmitter case.

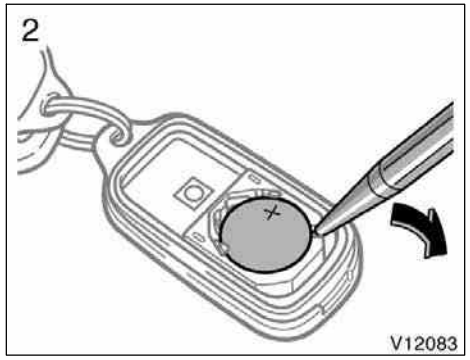

2. Remove the discharged transmitter battery by ballpoint pen. Insert the tip of ballpoint pen at the guide groove and lift as shown in the above illustration.

NOTICE
Do not bend the terminals.

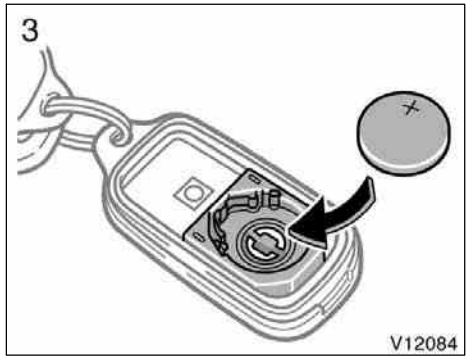

3. Put a new transmitter battery with positive (+) side up.

Close the transmitter case securely.

NOTICE
◆***Make sure the positive side and negative side of the transmitter battery are faced correctly.*** ◆***Do not replace the battery with wet hands. Water may cause unexpected rust.*** ◆***Do not touch or move any components inside of the transmitter, or it may interfere with proper operation.***

◆***Be careful not to bend the electrode of the transmitter battery insertion and that dust or oils do not adhere to the transmitter case.***

◆***Close the transmitter case securely.***

After replacing the battery, check that the transmitter operates properly. If the transmitter still does not operate properly, contact your Toyota dealer.

Power windows

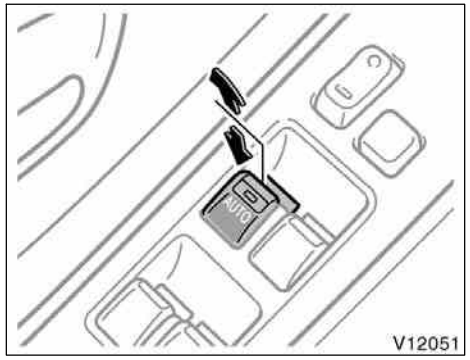

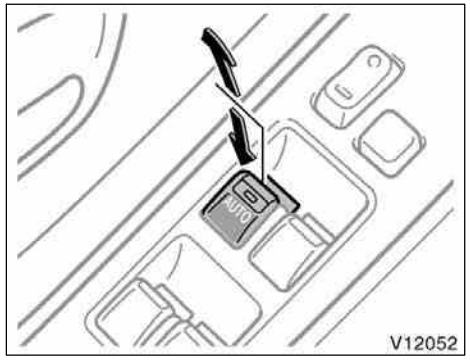

The windows can be operated with the switch on each side door.

The power windows work when the ignition switch is in the “ON” position.

Key off operation: If all the side doors and back door are closed, they work for 43 seconds even after the ignition switch is turned off. They stop working when the either front door is opened.

OPERATING THE DRIVER’S WINDOW

Use the switch on the driver’s door.

Normal operation: The window moves as long as you hold the switch.

To open: Lightly push down the switch.
To close: Lightly pull up the switch.

Automatic operation: Push the switch completely down or pull it completely up, and then release it. The window will fully open or close. To stop the window partway, lightly move the switch in the opposite direction and then release it.

Jam protection function: During automatic closing operation, the window stops and opens half way if something gets caught between the window and window frame.

If the window receives a strong impact, this function may work even if nothing is caught.

⚠ CAUTION

- **Never try jamming any part of your body to activate the jam protection function intentionally.**
- **The jam protection function may not work if something gets caught just before the window is fully closed.**

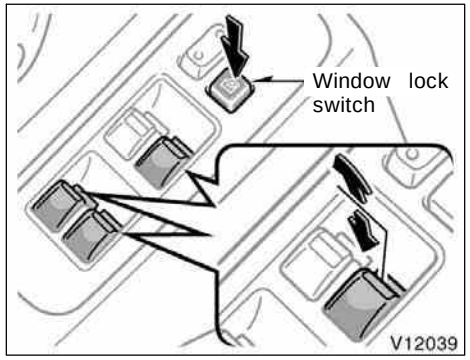

OPERATING THE PASSENGERS’ WINDOWS

Use the switch on each passenger’s door or the switches on the driver’s door that control each passenger’s window.

The window moves as long as you hold the switch.

To open: Push down the switch.
To close: Pull up the switch.

If you push in the window lock switch on the driver’s door, the passengers’ windows cannot be operated.

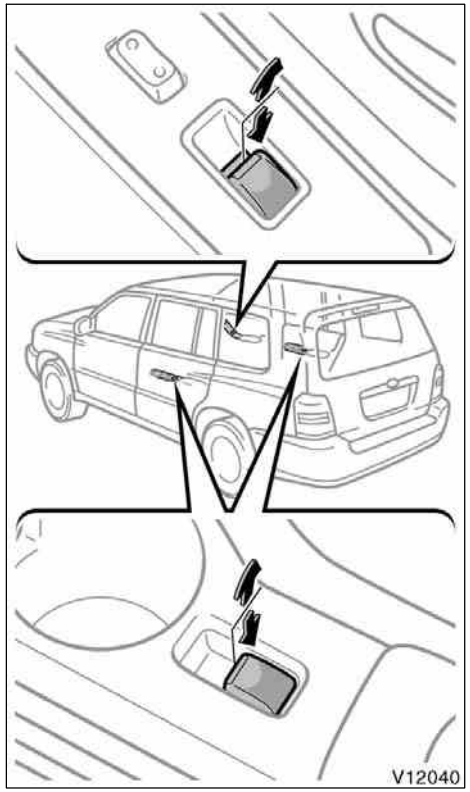

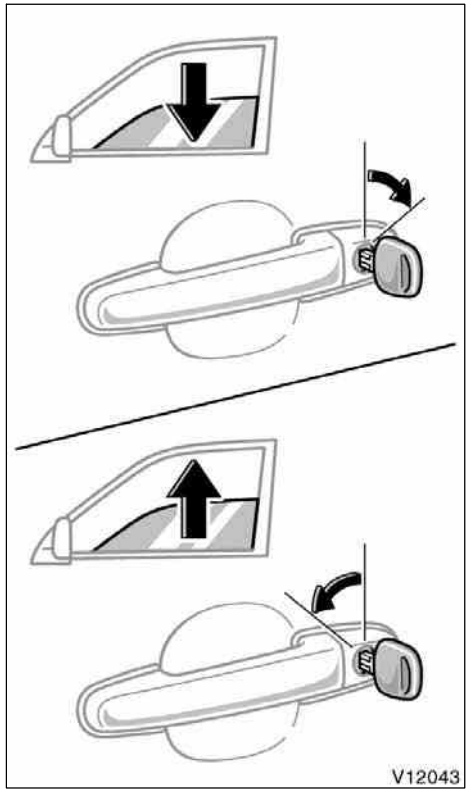

OPERATING THE DRIVER’S WINDOW FROM OUTSIDE THE VEHICLE

The driver’s window can be operated with the key inserted in the driver’s door keyhole.

To open: Turn the key fully backward and hold it.

After the door is unlocked, the window begins to open. To stop the window partway, release the key.

To close: Turn the key fully forward and hold it.

After the door is locked, the window begins to close. To stop the window partway, release the key.

This feature can be disabled. For details, contact your Toyota dealer.

⚠ CAUTION

To avoid serious personal injury, you must do the following.

- **Before you close the power windows, always make sure there is nobody around the power windows. You must also make sure the heads, hands and other parts of the bodies of all occupants are kept completely inside the vehicle. If someone’s neck, head or hands get caught in a closing window, it could result in a serious injury. When anyone closes the power windows, make sure he or she operates the windows safely.**
- **When small children are in the vehicle, never let them use the power window switches without supervision. Use the window lock switch to prevent them from making unexpected use of the switches.**
- **Be sure to remove the ignition key when you leave your vehicle.**
- **Never leave anyone (particularly a small child) alone in your vehicle, especially with the ignition key still inserted. Otherwise, he/she could use the power window switches and get trapped in a window. Unattended person (particularly a small child) can be involved in a serious accident.**

Back door

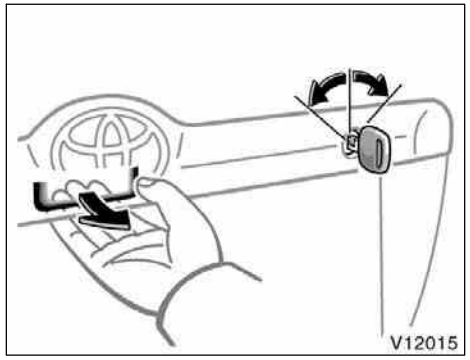

LOCKING AND UNLOCKING WITH KEY

Insert the key into the keyhole and turn it.

To lock: Turn the key clockwise.
To unlock: Turn the key counterclockwise.

To open the back door, pull the lock release lever.

Operating the power door lock switch or wireless remote control transmitter simultaneously locks or unlocks the back door. (See “Side doors” on page 16 in this Section.)

When closing the back door, make sure it is fully closed.

See “—Stowage precautions” on page 305 in Section 2 for precautions when loading luggage.

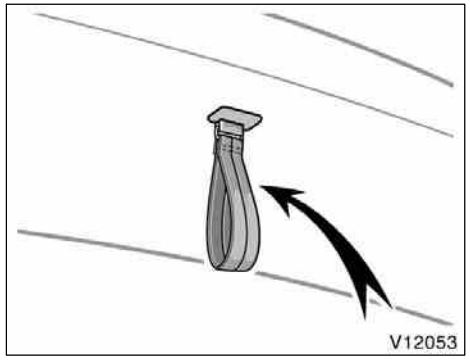

When closing the back door, the inside strap can be used to make the reach easier.

To close the back door, lower it and press down on it. After closing the back door, try pulling it up to make sure it is securely closed.

See “—Stowage precautions” on page 305 in Section 2 for precautions when loading luggage.

⚠ CAUTION

Keep the back door closed while driving. This not only keeps the luggage from being thrown out but also prevents exhaust gases from entering the vehicle.

Hood

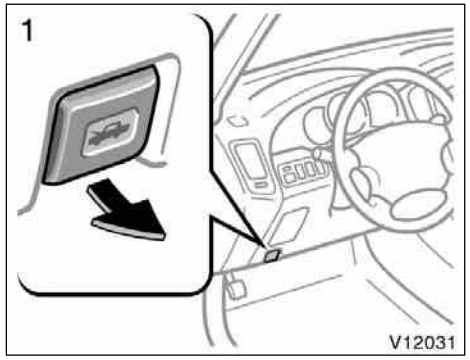

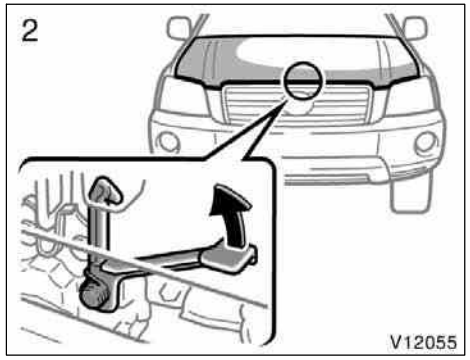

To open the hood:

1. **Pull the hood lock release lever. The hood will spring up slightly.**

⚠ CAUTION

Before driving, be sure that the hood is closed and securely locked. Otherwise, the hood may open unexpectedly while driving and an accident may occur.

2. **In front of the vehicle, pull up the auxiliary catch lever and lift the hood.**

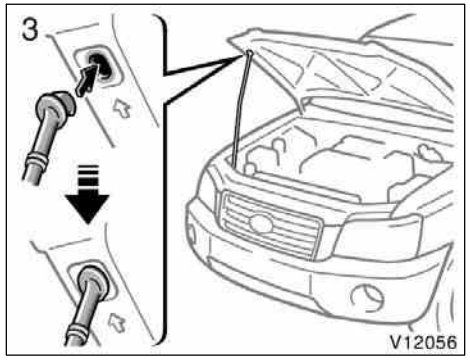

3. Hold the hood open by inserting the support rod into the slot.

Before closing the hood, check to see that you have not forgotten any tools, rags, etc. and return the support rod to its clip—this prevents rattles. Then lower the hood and make sure it locks into place. If necessary, press down gently on the front edge to lock it.

⚠ CAUTION

After inserting the support rod into the slot, make sure the rod supports the hood securely from falling down on to your head or body.

Theft deterrent system

To deter vehicle theft, the system is designed to sound an alarm if any of the side doors, back door or hood is forcibly unlocked or the battery terminal is disconnected and then reconnected when the system is set.

The alarm blows the horn intermittently and flashes the headlights, tail lights and turn signal lights, and turns on the interior light.

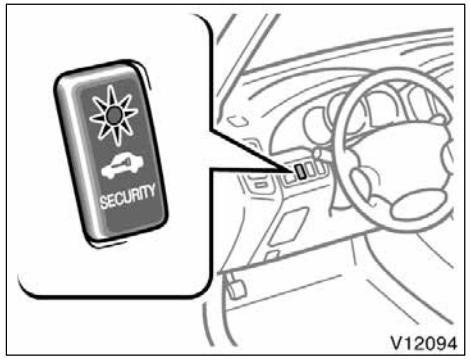

SETTING THE SYSTEM

1. Turn the ignition key to the “LOCK” position and remove it.

The indicator light will start flashing when the key is removed from the ignition switch. (See “Engine immobilizer system” on page 15 in this Section for details.)

2. Have all passengers get out of the vehicle.
3. Close and lock all the side doors, back door and hood.

The indicator light will remain on when all the side doors, back door and hood are closed and locked.

The system will automatically be set after 30 seconds. When the system is set, the indicator light will start flashing again.

4. After making sure the indicator light starts flashing, you may leave the vehicle.

Never leave anyone in the vehicle when you set the system, because unlocking from the inside will activate the system.

Canceling the system

The system will cancel within 30 seconds before the system is set automatically under any of the following conditions:

- Any of the side doors, back door or hood is opened.
- Any of the side doors or back door is unlocked.
- The key is inserted into the ignition.
- The battery terminal is reconnected.

If the tail lights come on for 2 seconds, the theft deterrent system has been alarmed. Check to see if there is any abnormality on your vehicle.

WHEN THE SYSTEM IS SET

Activating the system

The system will sound the alarm under the following conditions:

- If any of the side doors and back door is unlocked or opened without the key or wireless remote control transmitter, or if the hood is forcibly opened.
- If the battery terminal is disconnected and then reconnected.
- If the ignition is hot–wired.

The indicator light will come on when the system is activating.

If any of the side doors and back door is unlocked without the key or wireless remote control transmitter and the key is not in the ignition switch, all the side doors and back door will be automatically locked again.

After about 1 minute, the alarm will automatically stop and the indicator light will start flashing again.

Reactivating the alarm

Once set, the system automatically resets the alarm after the alarm stops.

The alarm will activate again under the same circumstances described in “Activating the system”.

Stopping the alarm

The alarm will be stopped by the following conditions:

- Turn the ignition key from the “LOCK” to “ON” position.
- Unlock any of the side doors or back door with the key or wireless remote control transmitter.

If the battery becomes discharged due to the vehicle being unused for a long time, etc., when the battery is recharged or replaced, the system will give the alarm. If this happens, immediately unlock any of the side doors or back door with the key or the wireless remote control transmitter, and the alarm will stop.

TESTING THE SYSTEM

1. Open all the windows.
2. Set the system as described above. The side doors and back door should be locked with the key or wireless remote control transmitter. Be sure to wait until the indicator light starts flashing.
3. Unlock any door from the inside. The system should activate the alarm.
4. Stopping the alarm as described above.
5. Repeat this operation for the other doors and hood. When testing the hood, also check that the system is activated when the battery terminal is disconnected and then reconnected.

If the system does not work properly, have it checked by your Toyota dealer.

Fuel tank cap

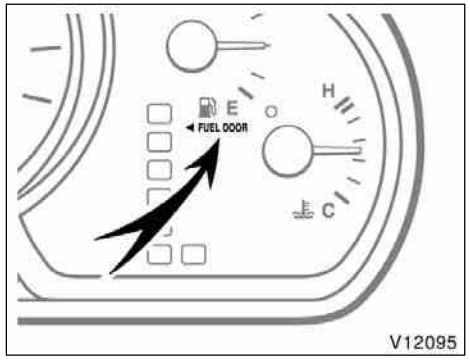

This indicates that the fuel filler door is on the left side of your vehicle.

1. To open the fuel filler door, pull the lever up.

When refueling, turn off the engine.

⚠ CAUTION

- **Do not smoke, cause sparks or allow open flames when refueling. The fumes are flammable.**
- **When opening the cap, do not remove the cap quickly. In hot weather, fuel under pressure could cause injury by spraying out of the filler neck if the cap is suddenly removed.**

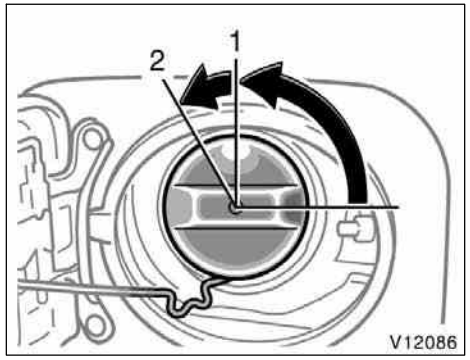

2. To remove the fuel tank cap, turn the cap counterclockwise by 90 degrees (to the pressure point 1), and then turn it an additional 30 degrees (to point 2). Pause slightly before removing it.

It is not unusual to hear a slight swoosh when the cap is opened.

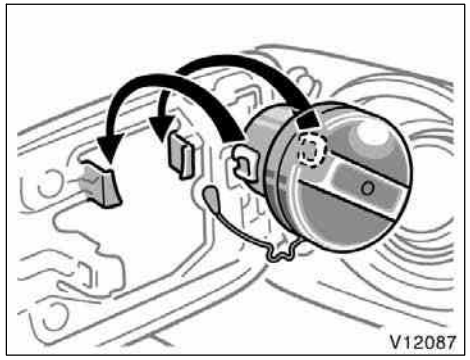

3. The removed cap can be stored on the back side of the fuel filler door.

Position the cap so that the hooks point to the left and right, and set it in the receptacle on the back side of the door.

When installing the cap, turn the cap clockwise until you hear a click. When you hear the click, the cap is fully closed.

If the cap is not installed securely, the malfunction indicator lamp comes on. Make sure the cap is tightened securely.

The indicator lamp goes off after driving several times. If the indicator lamp does not go off, contact your Toyota dealer as soon as possible.

⚠ CAUTION

- **Make sure the cap is installed securely to prevent fuel spillage in the event of an accident.**
- **Use only a genuine Toyota fuel tank cap for replacement. It is designed to regulate fuel tank pressure.**

NOTICE

To prevent damage to the cap, apply force only in the turning direction to the cap. Do not pull or pry it.

Electric moon roof

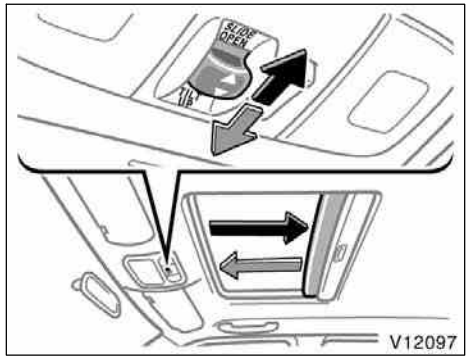

Sliding operation

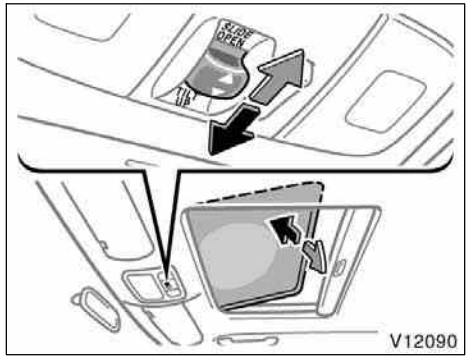

Tilting operation

To operate the moon roof, use the switch between the personal lights.

The moon roof works when the ignition switch is in the “ON” position.

The sun shade can be opened or closed by hand.

Sliding operation—

To open: Push the switch toward the “SLIDE OPEN” side.

The roof will fully open automatically. To stop the roof partway, push the switch toward either the “SLIDE OPEN” or “TILT UP” side quickly.

When you quickly push and release the switch, the moon roof will open while the switch is depressed and stop when released.

The sun shade will be opened together with the roof.

To close: Push the switch toward the “TILT UP” side.

The roof will fully close automatically. To stop the roof partway, push the switch toward either the “SLIDE OPEN” or “TILT UP” side quickly.

When you quickly push and release the switch, the moon roof will close while the switch is depressed and stop when released.

Tilting operation—

To tilt up: Push the switch toward the “TILT UP” side.

The roof will fully tilt up automatically. To stop the roof partway, push the switch toward either the “SLIDE OPEN” or “TILT UP” side quickly.

When you quickly push and release the switch, the moon roof will tilt up while the switch is depressed and stop when released.

To tilt down: Push the switch toward the “SLIDE OPEN” side.

The roof will fully tilt down automatically. To stop the roof partway, push the switch toward either the “SLIDE OPEN” or “TILT UP” side quickly.

When you quickly push and release the switch, the moon roof will tilt down while the switch is depressed and stop when released.

Key off operation: If all the side doors and back door are closed, it works for 43 seconds even after the ignition switch is turned off. It stops working when either front door is opened.

Jam protection function:

- If something gets caught between the moon roof and frame during slide closing operation, the moon roof stops and then opens slightly.
- If something gets caught between the moon roof and frame during tilting down operation, the moon roof stops and then tilts up fully.

If the moon roof receives a strong impact, this function may work even if nothing is caught.

If the battery is disconnected or run down, the moon roof may not operate automatically and the jam protection function will not function correctly after you reconnect, replace or recharge the battery. In any of these cases, you should normalize the moon roof.

To normalize the moon roof, push and hold the switch toward the “TILT UP” side. The moon roof will tilt up and down, then slide open and close. After the slide close operation, release the switch.

Make sure that the moon roof opens and closes automatically. If the moon roof cannot be operated properly, have it checked by your Toyota dealer.

⚠ CAUTION

To avoid serious personal injury, you must do the following.

- **While the vehicle is moving, always keep the heads, hands and other parts of the bodies of all occupants away from the roof opening. Otherwise, they could be seriously injured if the vehicle stops suddenly or if the vehicle is involved in an accident.**
- **Before you close the moon roof, always make sure there is nobody around the moon roof. You must also make sure nobody places his or her head, hands and other parts of the body in the roof opening. If someone’s neck, head or hands get caught in the closing roof, it could result in a serious injury. When anyone closes the moon roof, first make sure it is safe to do so.**
- **Be sure to remove the ignition key when you leave your vehicle.**
- **Never leave anyone (particularly a small child) alone in your vehicle, especially with the ignition key still inserted. Otherwise, he/she could use the moon roof switch and get trapped in the roof opening. Unattended person (particularly a small child) can be involved in a serious accident.**
- **Never sit on top of the vehicle around the roof opening.**
- **Never try jamming any part of your body to activate the jam protection function intentionally.**
- **The jam protection function may not work if something gets caught just before the moon roof is fully closed.**

SECTION 1–3

OPERATION OF INSTRUMENTS AND CONTROLS

Occupant restraint systems

Seats 36
Front seats 36
Rear seats 40
Flattening seatbacks 49
Seat heaters 52
Head restraints 53
Armrests 54
Seat belts 54
SRS airbags 66
Child restraint 85

Seats

While the vehicle is being driven, all vehicle occupants should have the seatback upright, sit well back in the seat and properly wear the seat belts provided.

⚠ CAUTION

- **Do not drive the vehicle unless the occupants are properly seated. Do not allow any passengers to sit on top of a folded–down seatback, or in the luggage compartment or cargo area. Persons not properly seated and/or not properly restrained by seat belts can be severely injured in the event of emergency braking or a collision.**
- **During driving, do not allow any passengers to stand up or move around between seats. Otherwise, severe injuries can occur in the event of emergency braking or a collision.**

Front seats—
—Front seat precautions

Driver seat

⚠ CAUTION

The SRS driver airbag deploys with considerable force, and can cause death or serious injury especially if the driver is very close to the airbag. The National Highway Traffic Safety Administration (“NHTSA”) advises:

Since the risk zone for driver airbag is the first 50—75 mm (2—3 in.) of inflation, placing yourself 250 mm (10 in.) from your driver airbag provides you with a clear margin of safety. This distance is measured from the center of the steering wheel to your breastbone. If you sit less than 250 mm (10 in.) away now, you can change your driving position in several ways:

- **Move your seat to the rear as far as you can while still reaching the pedals comfortably.**
- **Slightly recline the back of the seat. Although vehicle designs vary, many drivers can achieve the 250 mm (10 in.) distance, even with the driver seat all the way forward, simply by reclining the back of the seat somewhat. If reclining the back of your seat makes it hard to see the road, raise yourself by using a firm, non–slippery cushion, or raise the seat if your vehicle has that feature.**
- **If your steering wheel is adjustable, tilt it downward. This points the airbag toward your chest instead of your head and neck.**

The seat should be adjusted as recommended by NHTSA above, while still maintaining control of the foot pedals, steering wheel, and your view of the instrument panel controls.

Front passenger seat

CAUTION

The SRS front passenger airbag also deploys with considerable force, and can cause death or serious injury especially if the front passenger is very close to the airbag. The front passenger seat should be as far from the airbag as possible with the seatback adjusted, so the front passenger sits upright.

Front seats (with SRS side airbags)

CAUTION

The SRS side airbags are installed in the driver and front passenger seats. Observe the following precautions.

- **Do not lean against the front door when the vehicle is in use, since the side airbag inflates with considerable speed and force. Otherwise, you may be killed or seriously injured.**
- **Do not use seat accessories which cover the area where the side airbags inflate. Such accessories may prevent the side airbags from activating correctly, causing death or serious injury.**
- **Do not modify or replace the seats or upholstery of the seats equipped with side airbags. Such change may prevent the side airbag system from activating correctly, disable the system or cause the side airbag system to inflate accidentally, resulting in death or serious injury.**

—Seat adjustment precautions

CAUTION

- **Do not adjust the seat while the vehicle is moving as the seat may unexpectedly move and cause the driver to lose control of the vehicle.**
- **Be careful that the seat does not hit a passenger or luggage.**
- **After adjusting the seat position, release the lever and try sliding the seat forward and backward to make sure it is locked in position.**
- **After adjusting the seatback, push your body back against the seat to make sure the seat is locked in position.**
- **Do not put objects under the seats. Otherwise, the objects may interfere with the seat–lock mechanism or unexpectedly push up the seat position adjusting lever and the seat may suddenly move, causing the driver to lose control of the vehicle.**

—Adjusting front seats (manual seat)

- **While adjusting the seat, do not put your hands under the seat or near the moving parts. Otherwise, your hands or fingers may be caught and injured.**

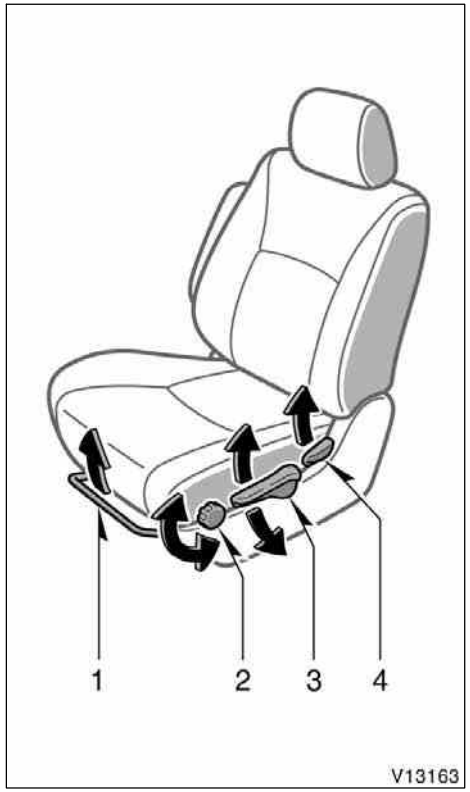

1. SEAT POSITION ADJUSTING LEVER

Hold the center of the lever and pull it up. Then slide the seat to the desired position with slight body pressure and release the lever.

2. SEAT CUSHION ANGLE ADJUSTING KNOB

To change the angle of the seat cushion on the front side, turn the knob either way.

3. SEAT HEIGHT ADJUSTING LEVER

To change the height of the seat, pull up or push down the lever.

4. SEATBACK ANGLE ADJUSTING LEVER

Lean forward and pull the lever up. Then lean back to the desired angle and release the lever.

CAUTION

To reduce the risk of sliding under the lap belt during a collision, avoid reclining the seatback any more than needed. The seat belts provide maximum protection in a frontal or rear collision when the driver and the front passenger are sitting up straight and well back in the seats. If you are reclined, the lap belt may slide past your hips and apply restraint forces directly to the abdomen. In the event of a frontal collision, the more the seat is reclined, the greater the risk of personal injury.

—Adjusting front seats (power seat)

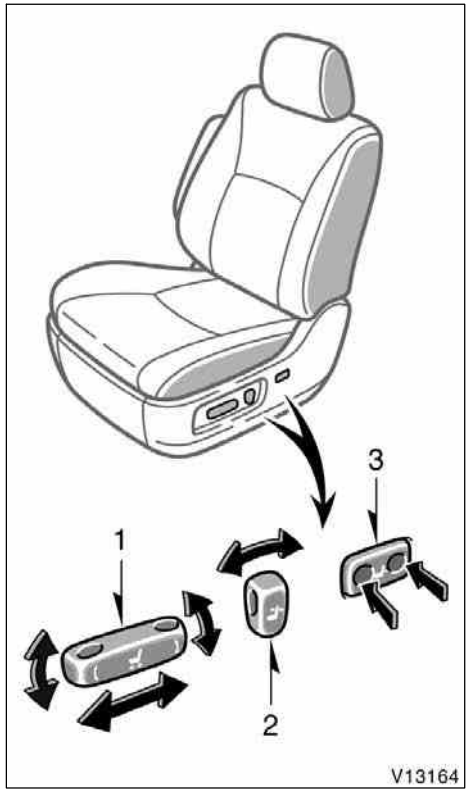

1. SEAT POSITION, SEAT CUSHION ANGLE AND SEAT HEIGHT ADJUSTING SWITCH

Move the adjusting switch in the desired direction.

Releasing the switch will stop the seat at that position.

Do not place anything under the front seats, as this might interfere with the seat movement.

2. SEATBACK ANGLE ADJUSTING SWITCH

Move the adjusting switch in the desired direction.

Releasing the switch will stop the seatback at that position.

CAUTION

To reduce the risk of sliding under the lap belt during a collision, avoid reclining the seatback any more than needed. The seat belts provide maximum protection in a frontal or rear collision when the driver and the front passenger are sitting up straight and well back in the seats. If you are reclined, the lap belt may slide past your hips and apply restraint forces directly to the abdomen. In the event of a frontal collision, the more the seat is reclined, the greater the risk of personal injury.

3. SEAT LUMBAR SUPPORT ADJUSTING SWITCH

Press either side of the switch.

The amount of lumber support will change while the switch is pressed.

Rear seats—
—Rear seat precautions

CAUTION

- **Do not adjust the seat while the vehicle is moving.**
- **Be careful that the seat does not hit a passenger or luggage.**
- **Be careful not to get your hands or feet pinched in the seat.**
- **After adjusting the seat position, release the lever and try sliding the seat forward and backward to make sure it is locked in position.**
- **After adjusting the seatback, push your body back against the seat to make sure the seat is locked in position.**

- **When returning the seatback to the upright position, observe the following precautions in order to prevent personal injury in a collision or sudden stop:**

  Make sure the seatback is securely locked by pushing forward and rearward on the top of the seatback. Failure to do so will prevent the seat belt from operating properly.

  Make sure the seat belts are not twisted or caught in the seatback and are arranged in their proper position and are ready to use.

Folding down the rear seatbacks will enlarge the luggage compartment. See “—Stowage precautions” on page 305 in Section 2 for precautions when loading luggage.

—Adjusting second seats

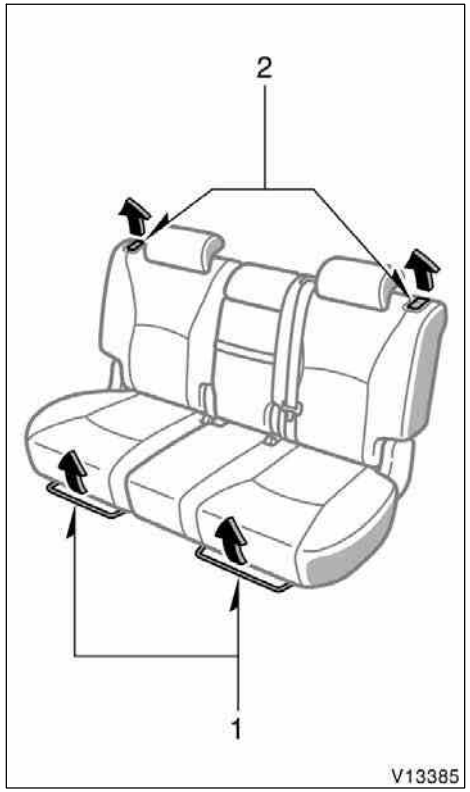

Vehicles with third seat

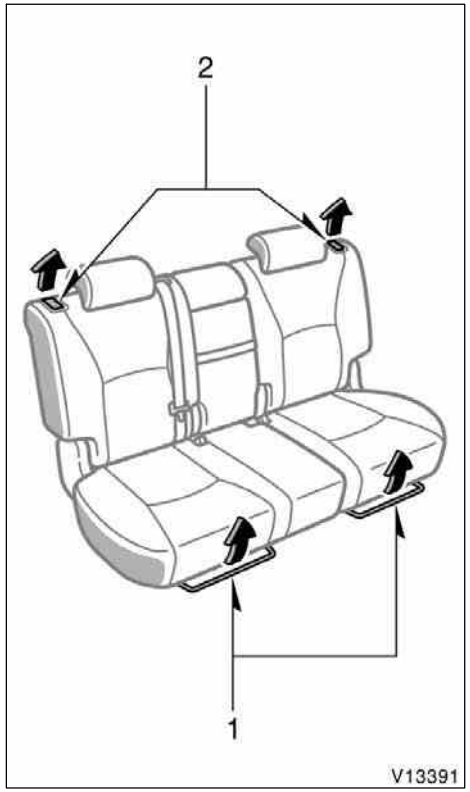

Vehicles without third seat

1. SEAT POSITION ADJUSTING LEVER

Hold the center of the lever and pull it up. Then slide the seat to the desired position with slight body pressure and release the lever.

2. SEATBACK ANGLE ADJUSTING LEVER

Pull the lever up. Then lean back to the desired angle and release the lever.

⚠ CAUTION

- **Do not adjust the seat while the vehicle is moving.**
- **Be careful that the seat does not hit a passenger or luggage.**

- **To reduce the risk of sliding under the lap belt during a collision, avoid reclining the seatback any more than needed. The seat belts provide maximum protection in a frontal or rear collision when the passengers are sitting up straight and well back in the seats. If you are reclined, the lap belt may slide past your hips and apply restraint forces directly to the abdomen. In the event of a frontal collision, the more the seat is reclined, the greater the risk of personal injury.**
- **After adjusting the seat position, release the lever and try sliding the seat forward and backward to make sure it is locked in position.**
- **After adjusting the seatback, push your body back against the seat to make sure the seat is locked in position.**

NOTICE

Do not fold the second seat seatback forward with the luggage cover hooks attached.

—Moving second seat for third seat access

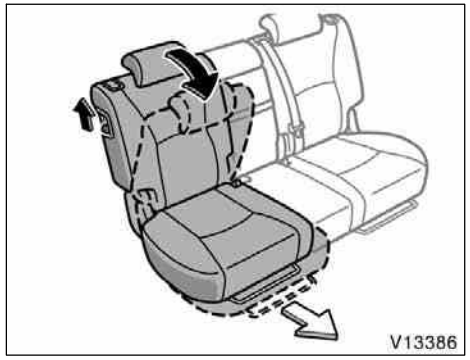

For easy access to the third seat, do this.

1. Lift the lever on the side of the seatback and fold the seatback.

   The seat will slide forward.
2. Move the seat to the front–most position.

After passengers are in, lift up the seatback and return the seat until it locks.

⚠ CAUTION

After putting back the seat, try pushing the seat forward and rearward to make sure it is secured in place.

To fold down the second seat after it has been moved to access the third seat, push the seatback up slightly and then pull the seatback adjusting lever before folding the seatback down. (See “—Folding down second seats” described below for instructions about folding down the second seat.)

—Folding down second seats

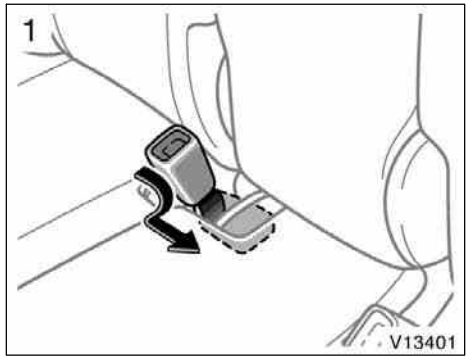

Vehicles with third seat

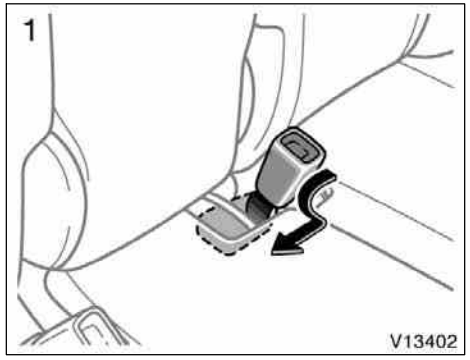

Vehicles without third seat

BEFORE FOLDING DOWN SECOND SEATS

1. **Stow the center seat belt buckle of the second seat as shown in the illustration.**

NOTICE
The seat belt buckle must be stowed before you fold the second seat.

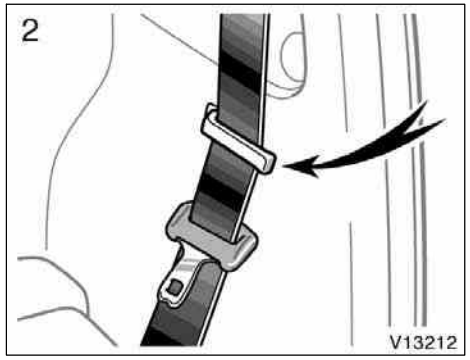

2. **Make sure the outer seat belts passes through the hangers when folding the second seat.**

This prevents the shoulder belt from being damaged.

⚠ **CAUTION**
The seat belt must be removed from the hangers when they are in use.

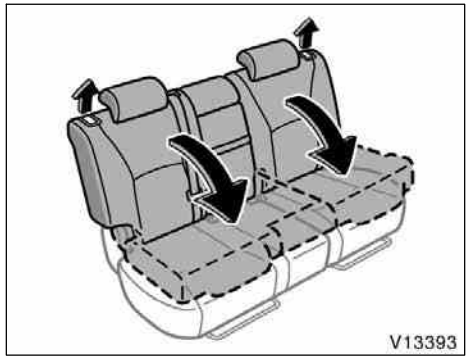

FOLDING DOWN SECOND SEATS (vehicles without third seat)

Pull the seatback angle adjusting lever to unlock the seatback and fold the seatback down until it locks.

The seat position returns to the rear–most position when the seatback is folded down.

⚠ CAUTION

Be careful that the seat does not hit a passenger or luggage.

NOTICE

Do not fold the second seat seatback forward with the luggage cover hooks attached.

Folding down the second seats will enlarge the luggage compartment. See “—Stowage precautions” on page 305 in Section 2 for precautions when loading luggage.

⚠ CAUTION

When returning the seatback to the upright position, observe the following precautions in order to prevent personal injury in a collision or sudden stop:

- **Make sure the seatback is securely locked by pushing forward and rearward on the top of the seatback. Failure to do so will prevent the seat belt from operating properly.**
- **Make sure the seat belts are not twisted or caught in the seatback and are arranged in their proper position and are ready to use.**

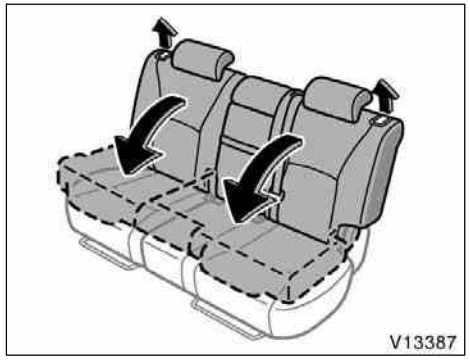

FOLDING DOWN SECOND SEATS (vehicles with third seat)

Pull the seatback angle adjusting lever to unlock the seatback and fold the seatback down until it locks.

Right side seat: The seat remains in position when pushing the seat cushion backwards while folding down the seatback.

⚠ CAUTION

- **Be careful that the seat does not hit a passenger or luggage.**
- **After folding down the right side seat, try pushing the seat forward and rearward to make sure it is secured in place.**

NOTICE

Do not fold the second seat seatback forward with the luggage cover hooks attached.

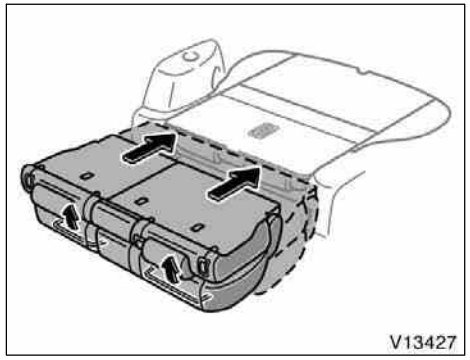

Folding down the second seats will enlarge the luggage compartment.

If there is space between the second seat and the folded third seat seatback, slide the folded second seat to the rear–most position.

⚠ CAUTION

After sliding the seat, try pushing the seat forward and rearward to make sure it is secured in place.

See “—Stowage precautions” on page 305 in Section 2 for precautions when loading luggage.

⚠ CAUTION

When returning the seatback to the upright position, observe the following precautions in order to prevent personal injury in a collision or sudden stop:

- **Make sure the seatback is securely locked by pushing forward and rearward on the top of the seatback. Failure to do so will prevent the seat belt from operating properly.**
- **Make sure the seat belts are not twisted or caught in the seatback and are arranged in their proper position and are ready to use.**

—Adjusting third seat

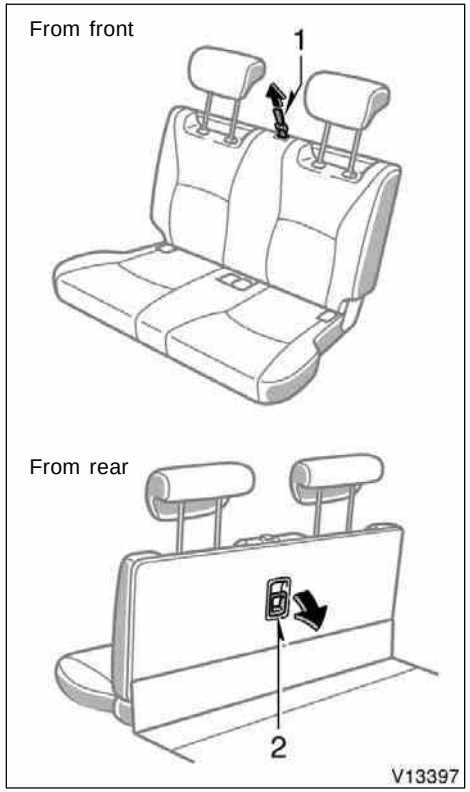

1. **SEATBACK ANGLE ADJUSTING STRAP**

Lean forward and pull the strap toward you. Then lean back to the desired angle and release the strap.

2. **SEATBACK ANGLE ADJUSTING LEVER**

Pull down the lever, then adjust the seatback to the desired angle and release the lever.

⚠ CAUTION

- **Do not adjust the seat while the vehicle is moving.**
- **Be careful that the seat does not hit a passenger or luggage.**

- **To reduce the risk of sliding under the lap belt during a collision, avoid reclining the seatback any more than needed. The seat belts provide maximum protection in a frontal or rear collision when the passengers are sitting up straight and well back in the seats. If you are reclined, the lap belt may slide past your hips and apply restraint forces directly to the abdomen. In the event of a frontal collision, the more the seat is reclined, the greater the risk of personal injury.**
- **After adjusting the seatback, push your body back against the seat to make sure the seat is locked in position.**

—Folding down third seat

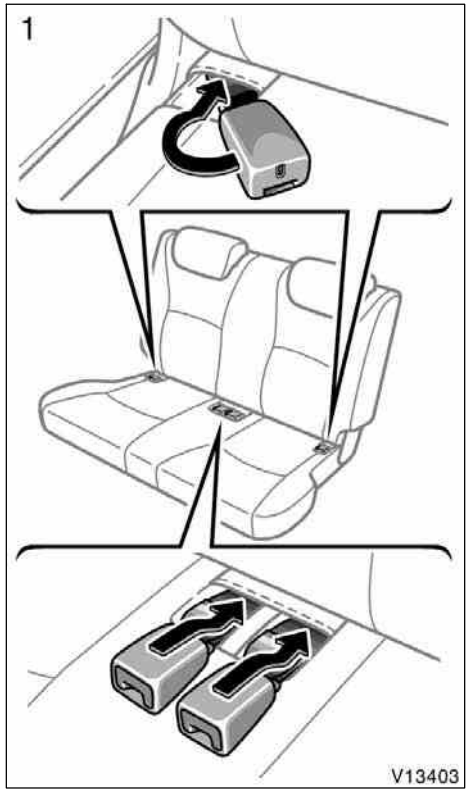

BEFORE FOLDING DOWN THIRD SEAT

Make sure that the seat is clear of people and luggage.

1. **Stow the third seat seat belt buckles as shown in the illustration.**

NOTICE
The seat belt buckles must be stowed before you fold the third seat.

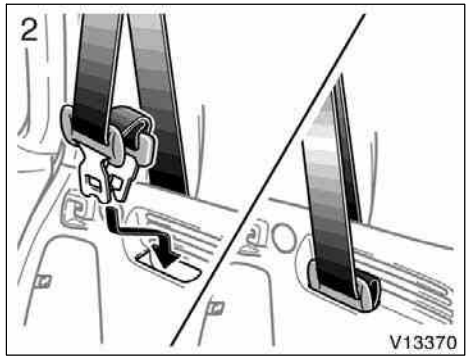

2. **To stow the seat belt, insert the tabs into the slot as shown above. Make sure the tabs are securely locked in the slot.**

NOTICE
The seat belt must be stowed before you fold the seatback.

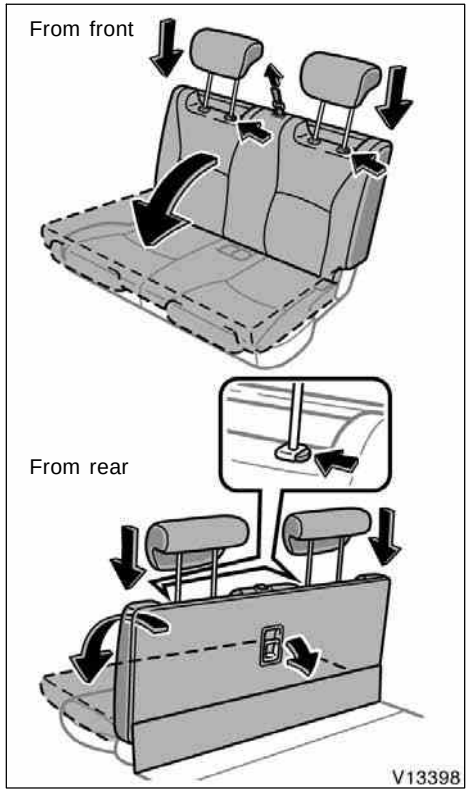

FOLDING DOWN THIRD SEAT

Lower the head restraints to the lowest position. Pull the seatback angle adjusting strap toward you or pull down the seatback angle adjusting lever to unlock the seatback and fold the seatback down until it locks.

⚠ CAUTION

Be careful that the seat does not hit a passenger or luggage.

Folding down the third seat will enlarge the luggage compartment. See “—Stowage precautions” on page 305 in Section 2 for precautions when loading luggage.

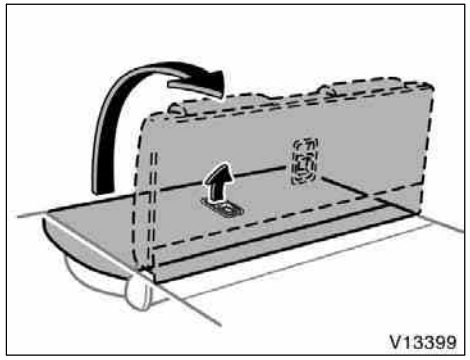

RETURNING THIRD SEAT

Pull the seatback adjusting lever to unlock the seatback and fold up the seatback to its upright lock position.

CAUTION

When returning the seatback to the upright position, observe the following precautions in order to prevent personal injury in a collision or sudden stop:

- **Make sure the seatback is securely locked by pushing forward and rearward on the top of the seatback. Failure to do so will prevent the seat belt from operating properly.**
- **Make sure the seat belts are not twisted or caught under the seat and are arranged in their proper position and are ready to use.**

Flattening seatbacks (manual seat)

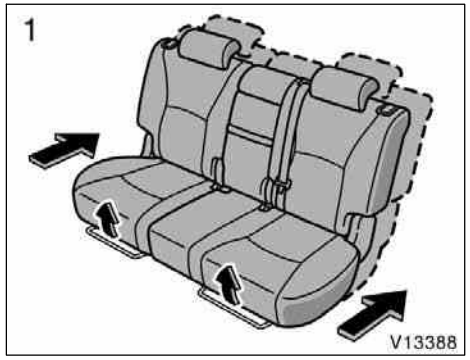

To flatten the seatbacks, do the following:

1. **Hold the center of the lever and pull it up, sliding the second seat to the rear–most position. Then pull the seat forward slightly until it locks.**
2. **Remove the head restraint. Hold the center of the lever and pull it up. Then slide the front seat further forward than the front–most lock position.**

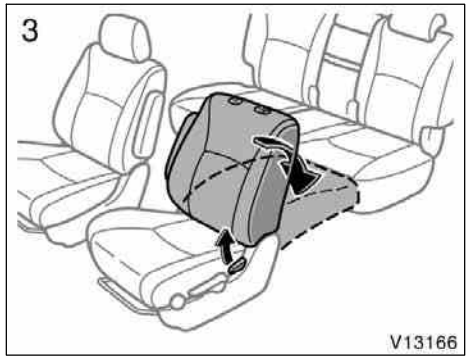

3. Pull the seatback angle adjusting lever up to unlock and push down the seatback.

When returning the seatback to the upright position, be careful not to make yourself hit by the seatback which will bound with considerable spring force.

After returning the seat to its original position, be certain to replace the head restraint.

CAUTION

- Do not allow passengers to ride on the flattened seat while driving; use the seat in the normal position.
- After returning the seat to its original position, try pushing the seat and seatback forward and rearward to make sure it is secured in place. Be certain to replace head restraint.

Flattening seatbacks (power seat)

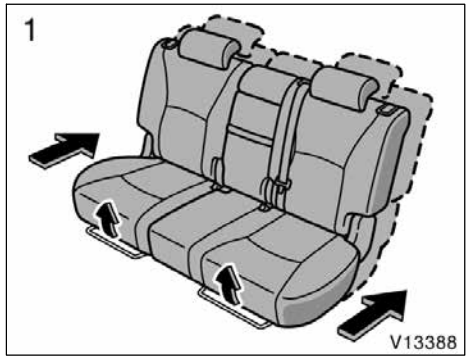

To flatten the seatbacks, do the following:

1. Hold the center of the lever and pull it up, sliding the second seat to the rear–most position. Then pull the seat forward slightly until it locks.

2. Remove the head restraint. Push the seat position adjusting switch forward to slide the front seat to the front–most position.

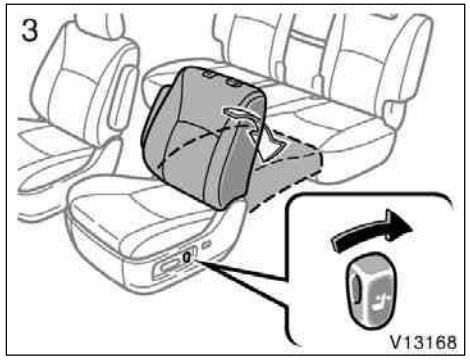

3. Move the seatback angle adjusting switch backward to flatten the seatback.

After returning the seat to its original position, be certain to replace the head restraint.

⚠ CAUTION

- Do not allow passengers to ride on the flattened seat while driving; use the seat in the normal position.
- After returning the seat to its original position, try pushing the seat and seatback forward and rearward to make sure it is secured in place. Be certain to replace head restraint.

Seat heaters

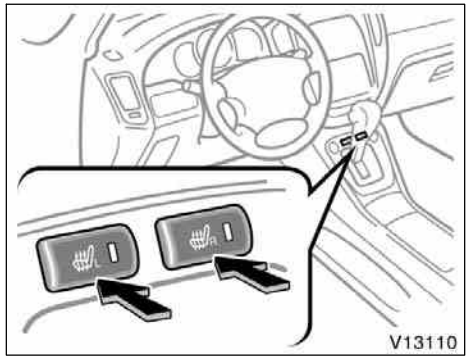

To turn on the seat heater, push the switches (“L” switch for the left front seat and “R” switch for the right front seat). At this time, the indicator light will illuminate to indicate the seat heater is operating.

To turn off the seat heater, push the switch once again.

The key must be in the “ON” position to operate seat heaters.

⚠ CAUTION

Occupants must use caution when operating the seat heater because it may make them feel too hot or cause burns at low temperatures (erythema, varicella). Use extra caution for;

- **Babies, small children, elderly persons, sick persons or handicapped persons**
- **Persons who have delicate skin**
- **Persons who are exhausted**
- **Persons who have taken alcohol or drugs which induce sleep (sleeping drug, cold remedy, etc.)**

To prevent the seat overheating, do not use the seat heater with a blanket, cushion, or other insulating objects which cover the seat.

NOTICE

- ***Do not put unevenly weighed objects on the seat and do not stick sharp objects (needles, nails, etc.) into the seat.***
- ***When cleaning the seats, do not use organic substances (paint thinner, benzine, alcohol, gasoline, etc.). They may damage the heater and seat surface.***
- ***To prevent the battery from being discharged, turn the switch off when the engine is not running.***

Head restraints

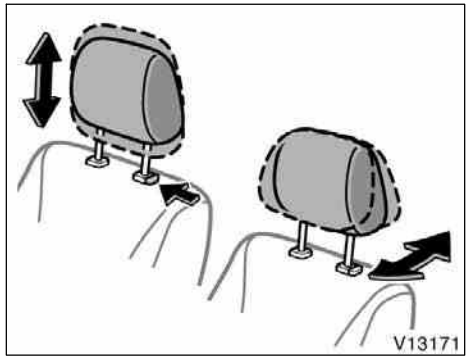

Front seats

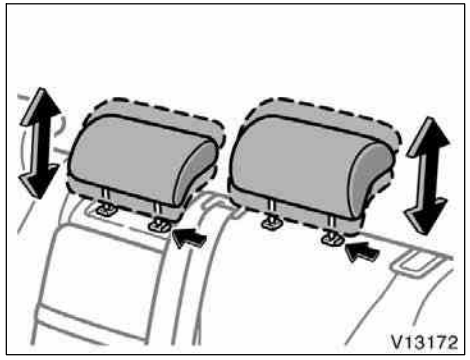

Second seats

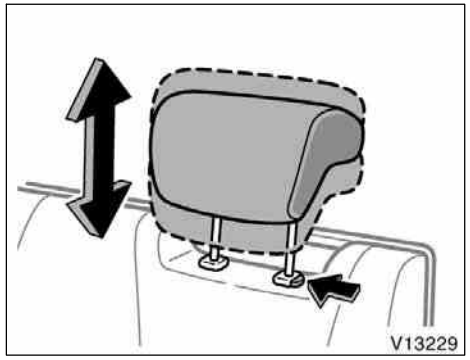

Third seats

For your safety and comfort, adjust the head restraint before driving.

To raise: Pull it up.
To lower: Push it down while pressing the lock release button.

Front head restraints only—On some models, you can also move the front head restraint forward or backward. If such adjustment is desired, pull or push the base of the head restraint.

Second and third seat head restraints—When an occupant sits in the second or third seat, always raise the head restraint to the lock position.

The head restraint is most effective when it is close to your head. Therefore, using a cushion on the seatback is not recommended.

⚠ CAUTION

- **Adjust the center of the head restraint so that it is closest to the top of your ears.**
- **After adjusting the head restraint, make sure it is locked in position.**
- **Do not drive with the head restraints removed.**

Armrests

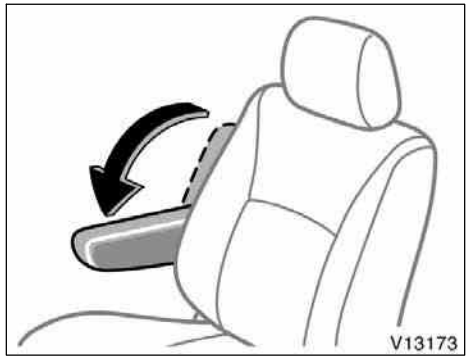

Front seats

Second seat

To use the armrest, pull it down as shown in the illustrations.

NOTICE
To prevent damage to the armrest, avoid putting heavy loads on it.

Seat belts—
—Seat belt precautions

Toyota strongly urges that the driver and passengers in the vehicle be properly restrained at all times with the seat belts provided. Failure to do so could increase the chance of injury and/or the severity of injury in accidents.

The seat belts provided for your vehicle are designed for people of adult size, large enough to properly wear them.

Child. Use a child restraint system appropriate for the child until the child becomes large enough to properly wear the vehicle’s seat belts. See “Child restraint” on page 85 in this Section for details.

If a child is too large for a child restraint system, the child should sit in the rear seat and must be restrained using the vehicle’s seat belt. According to accident statistics, the child is safer when properly restrained in the rear seat than in the front seat.

If a child must sit in the front seat, the seat belts should be worn properly. If an accident occurs and the seat belts are not worn properly, the force of the rapid inflation of the airbag may cause death or serious injury to the child.

Do not allow any children to stand up or kneel on either rear or front seats. An unrestrained child could suffer serious injury or death during emergency braking or a collision. Also, do not let the child sit on your lap. Holding a child in your arms does not provide sufficient restraint.

Pregnant woman. Toyota recommends the use of a seat belt. Ask your doctor for specific recommendations. The lap belt should be worn securely and as low as possible over the hips and not on the waist.

Injured person. Toyota recommends the use of a seat belt. Depending on the injury, first check with your doctor for specific recommendations.

CAUTION

Persons should ride in their seats properly wearing their seat belts whenever the vehicle is moving. Otherwise, they are much more likely to suffer serious bodily injury or death in the event of sudden braking or a collision.

When using the seat belts, observe the following:

- **Use the belt for only one person at a time. Do not use a single belt for two or more people—even children.**
- **To reduce the risk of sliding under the lap belt during a collision, avoid reclining the seatback any more than needed. The seat belts provide maximum protection in a frontal or rear collision when the driver and the front passenger are sitting up straight and well back in the seats. If you are reclined, the lap belt may slide past your hips and apply restraint forces directly to the abdomen. In the event of a frontal collision, the more the seat is reclined, the greater the risk of personal injury.**
- **Be careful not to damage the belt webbing or hardware. Take care that they do not get caught or pinched in the seat or doors.**
- **Inspect the belt system periodically. Check for cuts, fraying, and loose parts. Damaged parts should be replaced. Do not disassemble or modify the system.**
- **Keep the belts clean and dry. If they need cleaning, use a mild soap solution or lukewarm water. Never use bleach, dye, or abrasive cleaners, or allow them to come into contact with the belt—they may severely weaken the belts. (See “Cleaning the interior” on page 353 in Section 5.)**
- **Replace the belt assembly (including bolts) if it has been used in a severe impact. The entire assembly should be replaced even if damage is not obvious.**

—Fastening front and rear seat belts

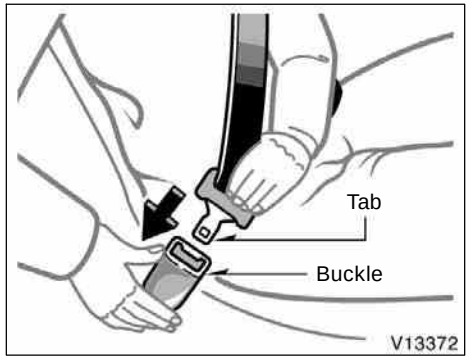

Adjust the seat as needed and sit up straight and well back in the seat. To fasten your belt, pull it out of the retractor and insert the tab into the buckle.

You will hear a click when the tab locks into the buckle.

The seat belt length automatically adjusts to your size and the seat position.

The retractor will lock the belt during a sudden stop or on impact. It also may lock if you lean forward too quickly. A slow, easy motion will allow the belt to extend, and you can move around freely.

When a passenger’s shoulder belt is completely extended and is then retracted even slightly, the belt is locked in that position and cannot be extended. This feature is used to hold the child restraint system securely. (For details, see “Child restraint” on page 85 in this Section.) To free the belt again, fully retract the belt and then pull the belt out once more.

If the seat belt cannot be pulled out of the retractor, firmly pull the belt and release it. You will then be able to smoothly pull the belt out of the retractor.

CAUTION

- **After inserting the tab, make sure the tab and buckle are locked and that the belt is not twisted.**
- **Do not insert coins, clips, etc. in the buckle as this may prevent you from properly latching the tab and buckle.**
- **If the seat belt does not function normally, immediately contact your Toyota dealer. Do not use the seat until the seat belt is fixed, because it cannot protect an adult occupant or your child from injury.**

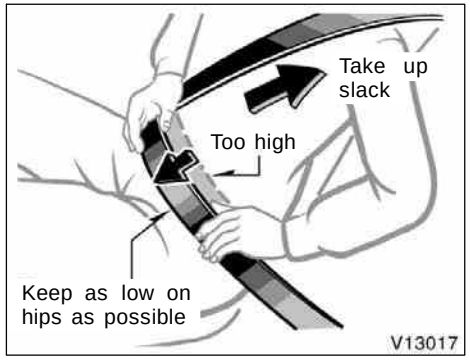

Adjust the position of the lap and shoulder belts.

Position the lap belt as low as possible on your hips—not on your waist, then adjust it to a snug fit by pulling the shoulder portion upward through the latch plate.

CAUTION

- **Both high–positioned lap belts and loose–fitting belts could cause serious injuries due to sliding under the lap belt during a collision or other unintended event. Keep the lap belt positioned as low on hips as possible.**
- **Do not place the shoulder belt under your arm.**

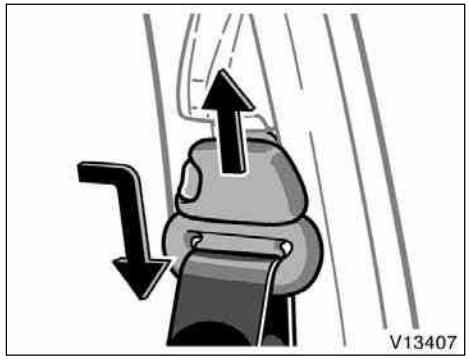

Seat belts with an adjustable shoulder anchor—

Adjust the shoulder anchor position to your size.

To raise: Slide the anchor up.
To lower: Push in the lock release button and slide the anchor down.

After adjustment make sure the anchor is locked in position.

CAUTION

Always make sure the shoulder belt is positioned across the center of your shoulder. The belt should be kept away from your neck, but not falling off your shoulder. Failure to do so could reduce the amount of protection in an accident and cause serious injures in a collision.

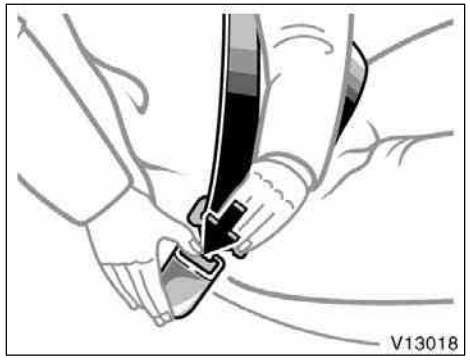

To release the belt, press the buckle release button and allow the belt to retract.

If the belt does not retract smoothly, pull it out and check for kinks or twists. Then make sure it remains untwisted as it retracts.

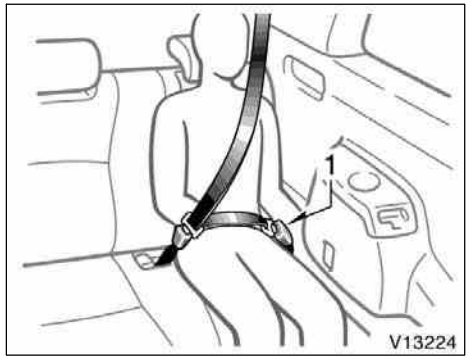

THIRD SEAT SEAT BELTS

The third seat seat belts are 3–point type restraint with 2 buckles. Both seat belt buckles must be correctly located and securely latched for proper operation.

Make sure that buckle 1 is securely latched for ready use of the third seat seat belt.

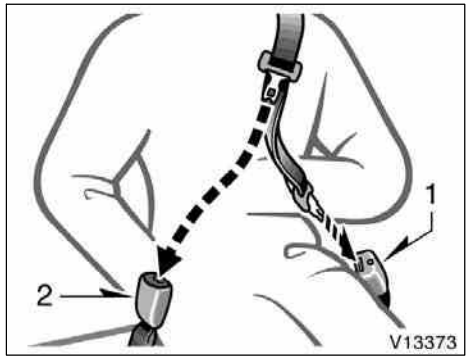

Two buckles and tabs for third seat seat belt

The two tabs have different shape for its end so that the belt is not buckled in the wrong place.

Buckle 1—Properly matches with concave end tab
Buckle 2—Properly matches with round end tab

⚠ CAUTION

Make sure the both buckles are correctly located and securely latched. Failure to properly match the buckle and tab may cause severe injury in case of an accident or a collision.

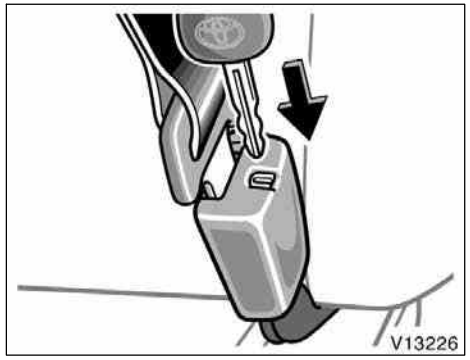

To release the concave end tab, insert the key into the hole on buckle 1 and allow the belt to retract.

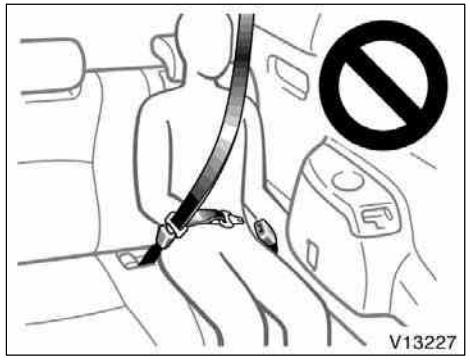

⚠ CAUTION

Do not use the third seat seat belt with either buckle released. Fastening only the shoulder belt or lap belt may cause severe personal injury in case of sudden braking or a collision.

—Stowing the second and third seat seat belt buckles

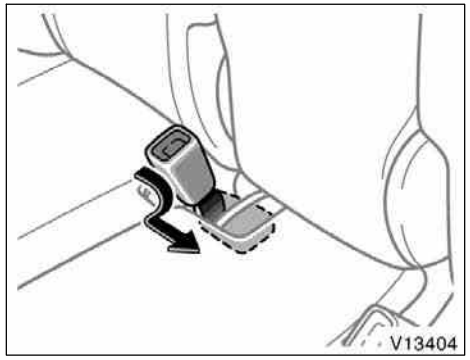

Second seat (vehicles with third seat)

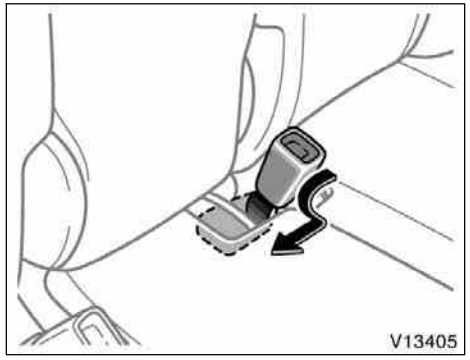

Second seat (vehicles without third seat)

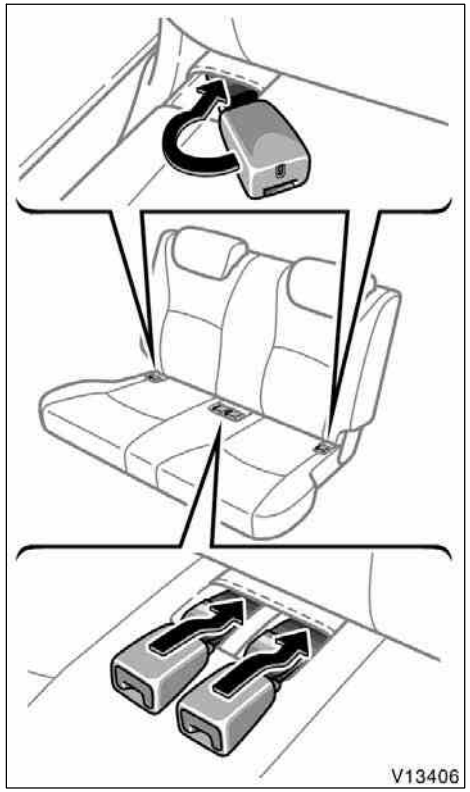

Third seats

The second and third seat seat belt buckles can be stowed when not in use.

Seat belt buckles must be stowed before you fold the seatback. (See “—Folding down second seats” on page 43 and “—Folding down third seat” on page 47 in this Section.)

—Stowing the third seat seat belt

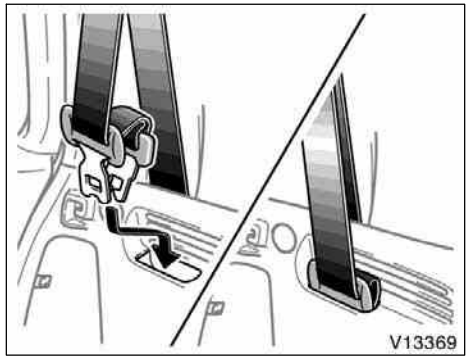

To stow the third seat seat belt, insert the tabs into the slot as shown above. Make sure the tabs are securely locked in the slot.

Seat belt must be stowed before you fold the seatback. (See “—Folding down third seat” on page 47 in this Section.)

NOTICE

Stow the third seat seat belt except when you are wearing it.

—Seat belt extender

If your seat belts cannot be fastened securely because they are not long enough, a personalized seat belt extender is available from your Toyota dealer free of charge.

Please contact your local Toyota dealer to order the proper required length for the extender. Bring the heaviest coat you expect to wear for proper measurement and selection of length. Additional ordering information is available at your Toyota dealer.

⚠ CAUTION

When using the seat belt extender, observe the following precautions. Failure to follow these instructions could reduce the effectiveness of the seat belt restraint system in case of an accident, increasing the chance of personal injury.

- **Remember that the extender provided for you may not be safe when used on a different vehicle, for another person, or at a different seating position than the one originally intended.**

- **If the seat belt extender has been connected to the driver’s seat belt buckle without wearing the seat belt when using the extender in the driver’s seat, the SRS driver’s airbag system will judge that the driver wears the seat belt even if not wearing it. In this case, the driver’s airbag may not activate correctly, causing death or serious injury in the event of collision. Be sure to wear the seat belt with the seat belt extender.**

- **Make sure the “AIRBAG ON” indicator light is illuminated when using the seat belt extender for the front passenger seat. If the “AIRBAG OFF” indicator light is illuminated, disconnect the extender tongue from the seat belt buckle, then reconnect the seat belt. Reconnect the seat belt extender after making sure the “AIRBAG ON” indicator light is illuminated. If you use the seat belt extender while the “AIRBAG OFF” indicator light is illuminated, the front passenger airbag and side airbag on the front passenger side may not activate correctly, causing death or serious injury in the event of collision.**
- **Be sure to wear the seat belt without the seat belt extender if you can fasten the seat belt without the extender.**

- **Do not use the seat belt extender when installing a child restraint system on the front or rear passenger seat. If installing a child restraint system with the seat belt extender connected to the seat belt, the seat belt will not securely hold the child restraint system, which could cause death or serious injury to the child or other passengers in the event of collision.**

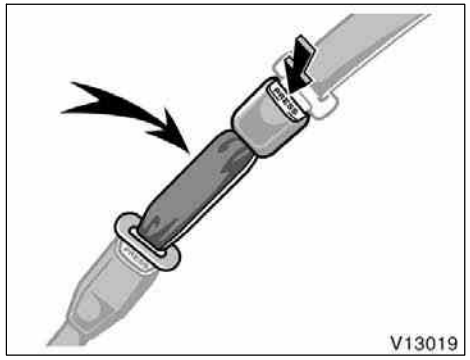

To connect the extender to the seat belt, insert the tab into the seat belt buckle so that the “PRESS” signs on the buckle release buttons of the extender and the seat belt are both facing outward as shown.

You will hear a click when the tab locks into the buckle.

When releasing the seat belt, press on the buckle release button on the extender, not on the seat belt. This helps prevent damage to the vehicle interior and extender itself.

As far as the seat belt extender on the front passenger side is concerned, do not fail to disconnect the extender from the seat belt after the above operation in order to activate the front passenger airbag correctly when getting into the vehicle next time.

When not in use, remove the extender and store in the vehicle for future use.

⚠ CAUTION

- **After inserting the tab, make sure the tab and buckle are locked and that the lap and shoulder portions of the belt and the seat belt extender are not twisted.**
- **Do not insert coins, clips, etc. in the buckle as this may prevent you from properly latching the tab and buckle.**
- **If the seat belt does not function normally, immediately contact your Toyota dealer. Do not use the seat until the seat belt is fixed, because it cannot protect an adult occupant or your child from injury.**

—Seat belt pretensioners

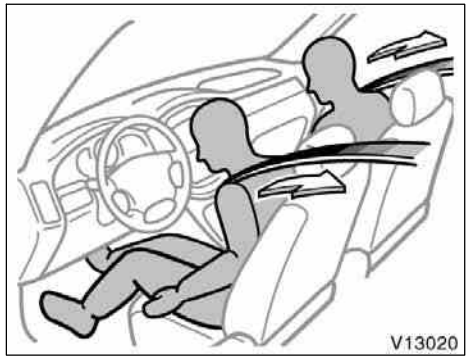

The driver and front passenger seat belt pretensioners are designed to be activated in response to a severe frontal impact.

When the sensor detects a severe frontal impact, the front seat belts are quickly drawn back by the retractors so that the belts snugly restrain the occupants.

The front passenger’s seat belt pretensioner will not activate if no passenger is detected in the front passenger seat by the front passenger occupant classification system. However, the front passenger’s seat belt pretensioner may activate if luggage is put on the seat, or the seat belt is buckled up regardless of the presence of an occupant in the seat. (As for the front passenger occupant classification system, see “—Front passenger occupant classification system” on page 81 in this Section.)

The seat belt pretensioners and SRS airbags may not operate together in all collisions.

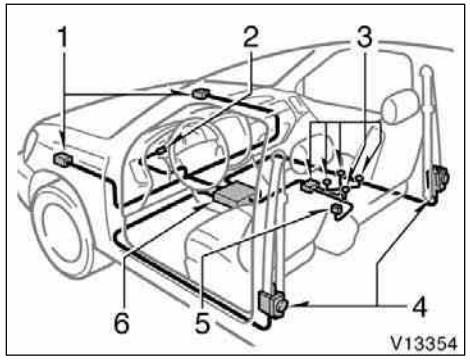

The seat belt pretensioner system consists mainly of the following components and their locations are shown in the illustration.

1. Front airbag sensors
2. SRS warning light
3. Front passenger occupant classification system (ECU and sensors)
4. Seat belt pretensioner assemblies
5. Front passenger’s seat belt buckle switch
6. Airbag sensor assembly

The seat belt pretensioners are controlled by the airbag sensor assembly. The airbag sensor assembly consists of a safing sensor and airbag sensor.

When the seat belt pretensioners are activated, an operating noise may be heard and a small amount of non–toxic gas may be released. This does not indicate that a fire is occurring. This gas is normally harmless.

Once the seat belt pretensioners have been activated, the seat belt retractors remain locked.

⚠ CAUTION

Do not modify, remove, strike or open the seat belt pretensioner assemblies, airbag sensor or surrounding area or wiring. Failure to follow these instructions may prevent the seat belt pretensioners from activating correctly, cause sudden operation of the system or disable the system, which could result in death or serious injury. Consult your Toyota dealer about any repair and modification.

NOTICE

Do not perform any of the following changes without consulting your Toyota dealer. Such changes can interfere with proper operation of the seat belt pretensioners in some cases.

- ***Installation of electronic devices such as a mobile two–way radio, cassette tape player or compact disc player***
- ***Repairs on or near the front seat belt retractor assemblies***
- ***Modification of the suspension system***
- ***Modification of the front end structure***
- ***Attachment of a grille guard (bull bar, kangaroo bar, etc.), snowplow, winches or any other equipment to the front end***
- ***Repairs made on or near the front fenders, front end structure or console***

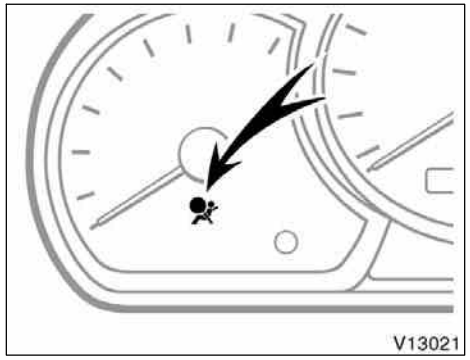

This indicator comes on when the ignition key is turned to the “ON” position. It goes off after about 6 seconds. This means the seat belt pretensioners are operating properly.

This warning light system monitors the airbag sensor assembly, front airbag sensors, side and curtain shield airbag sensors, curtain shield airbag sensors, driver’s seat position sensor, driver’s seat belt buckle switch, front passenger occupant classification system, “AIRBAG ON” indicator light, “AIRBAG OFF” indicator light, front passenger’s seat belt buckle switch, seat belt pretensioner assemblies, inflators, warning light, interconnecting wiring and power sources. (For details, see “Service reminder indicators and warning buzzers” on page 129 in Section 1–6.)

If any of the following conditions occurs, this indicates a malfunction of the airbags or seat belt pretensioners. Contact your Toyota dealer as soon as possible.

- When the ignition key is turned to the “ON” position, the light does not come on, remains on for more than 6 seconds or flashes.
- The light comes on or starts flashing while driving.
- If any seat belt does not retract or cannot be pulled out due to a malfunction or activation of the relevant seat belt pretensioner.
- The seat belt pretensioner assembly or surrounding area has been damaged.

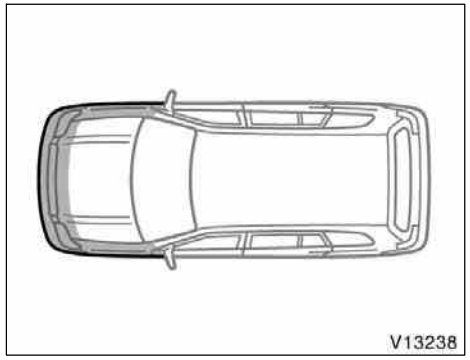

In the following cases, contact your Toyota dealer as soon as possible:

- The front of the vehicle (shaded in the illustration) was involved in an accident that was not severe enough to cause the seat belt pretensioners to operate.
- Either seat belt pretensioner assembly or surrounding area is scratched, cracked, or otherwise damaged.

SRS airbags—
—SRS driver airbag and front passenger airbag

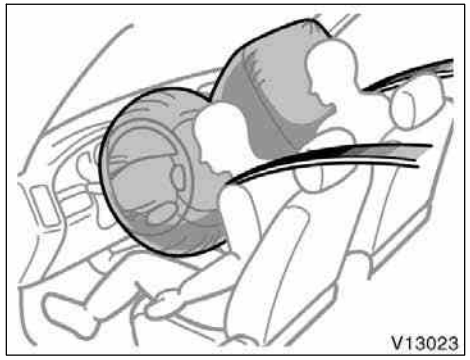

The SRS (Supplemental Restraint System) front airbags are designed to provide further protection for the driver and front passenger in addition to the primary safety protection provided by the seat belts.

In response to a severe frontal impact, the SRS front airbags work together with the seat belts to help reduce injury by inflating. The SRS front airbags help reduce injuries mainly to the driver’s or front passenger’s head or chest caused by hitting the vehicle interior.

The front passenger airbag will not activate if there is no passenger sitting in the front passenger seat. However, the front passenger airbag may deploy if luggage is put in the seat, or the seat belt is buckled up regardless of the presence of the occupant in the seat. (As for the front passenger occupant classification system, see “—Front passenger occupant classification system” on page 81 in this Section.)

Always wear your seat belt properly.

Your vehicle is equipped with a crash sensing and diagnostic module, which will record the use of the seat belt restraint system by the driver and front passenger when the SRS front airbags are inflated.

⚠ CAUTION

- **The SRS front airbag system is designed only as a supplement to the primary protection of the driver and front passenger seat belt systems. The driver and front passenger can be killed or seriously injured by the inflating airbags if they do not wear the available seat belts properly. During sudden braking just before a collision, an unrestrained driver or front passenger can move forward into direct contact with or close proximity to the airbag which may then deploy during the collision. To ensure maximum protection in an accident, the driver and all passengers in the vehicle must wear their seat belts properly. Wearing a seat belt properly during an accident reduces the chances of death or serious injury or being thrown out of the vehicle. For instructions and precautions concerning the seat belt system, see “Seat belts” on page 54 in this Section.**

- **Improperly seated and/or restrained infants and children can be killed or seriously injured by the deploying airbags. An infant or child who is too small to use a seat belt should be properly secured using a child restraint system. Toyota strongly recommends that all infants and children be placed in the rear seat of the vehicle and properly restrained. The rear seat is the safest for infants and children. For instructions concerning the installation of a child restraint system, see “Child restraint” on page 85 in this Section.**

The SRS front airbags are designed to deploy in severe (usually frontal) collisions where the magnitude and duration of the forward deceleration of the vehicle exceeds the designed threshold level.

The SRS front airbags will deploy if the severity of the impact is above the designed threshold level, comparable to an approximate 25 km/h (15 mph) collision when the vehicles has the impact straight into a fixed barrier that does not move or deform.

However, this threshold velocity will be considerably higher if the vehicle strikes an object, such as a parked vehicle or sign pole, which can move or deform on impact, or if the vehicle is involved in an underride collision (e.g. a collision in which the front of the vehicle “underrides”, or goes under, the bed of a truck, etc.).

It is possible that in some collisions where the forward deceleration of the vehicle is very close to the designed threshold level, the SRS front airbags and the seat belt pretensioners may not activate together.

Always wear your seat belts properly.

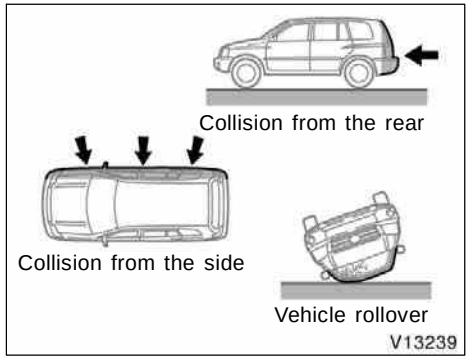

The SRS front airbags are generally not designed to inflate if the vehicle is involved in a side or rear collision, if it rolls over, or if it is involved in a low–speed frontal collision. But, whenever a collision of any type causes sufficient forward deceleration of the vehicle, deployment of the SRS front airbags may occur.

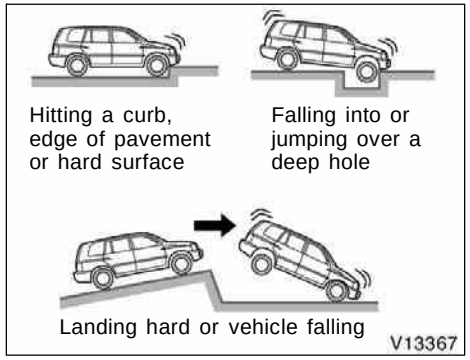

The SRS front airbags may also deploy if a serious impact occurs to the underside of your vehicle. Some examples are shown in the illustration.

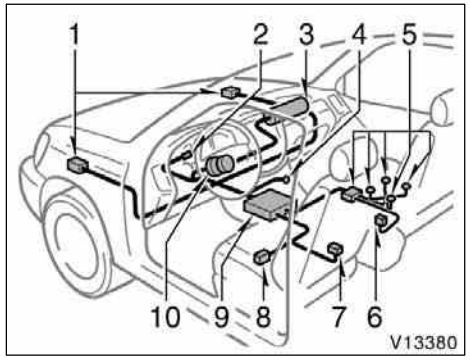

The SRS front airbag system consists mainly of the following components, and their locations are shown in the illustration.

1. Front airbag sensors
2. SRS warning light
3. Airbag module for front passenger (airbag and inflator)
4. “AIRBAG ON” and “AIRBAG OFF” indicator lights
5. Front passenger occupant classification system (ECU and sensors)
6. Front passenger’s seat belt buckle switch
7. Driver’s seat belt buckle switch
8. Driver’s seat position sensor
9. Airbag sensor assembly
10. Airbag module for driver (airbag and inflator)

The airbag sensor assembly consists of a safing sensor and airbag sensor.

The front airbag sensors constantly monitor the forward deceleration of the vehicle. If an impact results in a forward deceleration beyond the designed threshold level, the system triggers the airbag inflators. At this time a chemical reaction in the inflators very quickly fills the airbags with non–toxic gas to help restrain the forward motion of the occupants. The front airbags then quickly deflate, so that there is no obstruction of the driver’s vision should it be necessary to continue driving.

When the airbags inflate, they produce a loud noise and release some smoke and residue along with non–toxic gas. This does not indicate a fire. This smoke may remain inside the vehicle for some time, and may cause some minor irritation to the eyes, skin or breathing. Be sure to wash off any residue as soon as possible to prevent any potential skin irritation with soap and water. If you can safely exit from the vehicle, you should do so immediately.

Deployment of the airbags happens in a fraction of a second, so the airbags must inflate with considerable force. While the system is designed to reduce serious injuries, primarily to the head and chest, it may also cause other, less severe injuries to the face, chest, arms and hands. These are usually in the nature of minor burns or abrasions and swelling, but the force of a deploying airbag can cause more serious injuries, especially if an occupant’s hands, arms, chest or head is in close proximity to the airbag module at the time of deployment. This is why it is important for the occupant to: avoid placing any object or part of the body between the occupant and the airbag module; sit straight and well back into the seat; wear the available seat belt properly; and sit as far as possible from the airbag module, while still maintaining control of the vehicle.

Parts of the airbag module (steering wheel hub, airbag cover and inflator) may be hot for several minutes after deployment, so do not touch! The airbags inflate only once. The windshield may be damaged by absorbing some of the force of the inflating airbag.

⚠ CAUTION

The driver or front passenger who is too close to the steering wheel or dashboard during airbag deployment can be killed or seriously injured. Toyota strongly recommends that:

- **The driver sit as far back as possible from the steering wheel while still maintaining control of the vehicle.**
- **The front passenger sit as far back as possible from the dashboard.**
- **All vehicle occupants be properly restrained using the available seat belts.**

For instructions and precautions concerning the seating position, see “—Front seat precautions” on page 36 in this Section.

- **Do not sit on the edge of the seat or lean against the dashboard when the vehicle is in use, since the front passenger airbag could inflate with considerable speed and force. Anyone who is up against, or very close to, an airbag when it inflates, can be killed or seriously injured. Sit up straight and well back in the seat, and always use your seat belt properly.**

- **Toyota strongly recommends that all infants and children be placed in the rear seat of the vehicle and be properly restrained.**
- **Do not hold a child on your lap or in your arms. Use a child restraint system in the rear seat. For instructions concerning the installation of a child restraint system, see “Child restraint” on page 85 in this Section.**

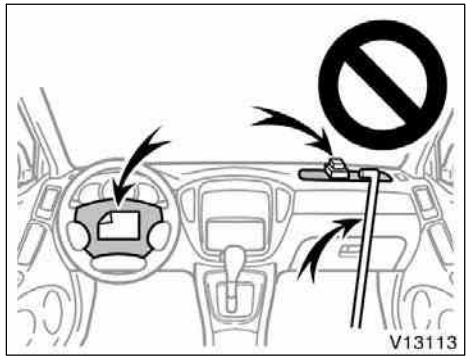

- **Do not put anything or any part of your body on or in front of the dashboard or steering wheel pad that houses the front airbag system. They might restrict inflation or cause death or serious injury as they are projected rearward by the force of the deploying airbags. Likewise, the driver and front passenger should not hold objects in their arms or on their knees.**

- **Do not modify or remove any wiring. Do not modify, remove, strike or open any components such as the steering wheel pad, steering wheel, column cover, dashboard near the front passenger airbag, front passenger airbag cover, front passenger airbag or airbag sensor assembly. Doing so may prevent the front airbag system from activating correctly, cause sudden activation of the system or disable the system, which could result in death or serious injury.**

Failure to follow these instructions can result in death or serious injury. Consult your Toyota dealer about any repair and modification.

If you wish to modify your vehicle for the handicapped, consult with your Toyota dealer. It may dangerously interfere with the SRS front airbags operation.

NOTICE

Do not perform any of the following changes without consulting your Toyota dealer. Such changes can interfere with proper operation of the SRS front airbag system in some cases.

- ***Installation of electronic devices such as a mobile two–way radio, cassette tape player or compact disc player***
- ***Modification of the suspension system***
- ***Modification of the front end structure***
- ***Attachment of a grille guard (bull bar, kangaroo bar, etc.), snowplow, winches or any other equipment to the front end***
- ***Repairs made on or near the front fenders, front end structure, console, steering column, steering wheel or dashboard near the front passenger airbag***

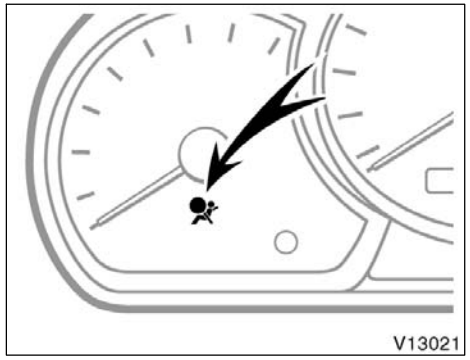

This indicator comes on when the ignition key is turned to the “ON” position. It goes off after about 6 seconds. This means the SRS front airbags are operating properly.

This warning light system monitors the airbag sensor assembly, front airbag sensors, side and curtain shield airbag sensors, curtain shield airbag sensors, driver’s seat position sensor, driver’s seat belt buckle switch, front passenger occupant classification system, “AIRBAG ON” indicator light, “AIRBAG OFF” indicator light, front passenger’s seat belt buckle switch, seat belt pretensioner assemblies, inflators, warning light, interconnecting wiring and power sources. (For details, see “Service reminder indicators and warning buzzers” on page 129 in Section 1–6.)

If either of the following conditions occurs, this indicates a malfunction of the airbags or seat belt pretensioners. Contact your Toyota dealer as soon as possible.

- When the ignition key is turned to the “ON” position, the light does not come on, remains on for more than 6 seconds or flashes.
- The light comes on or starts flashing while driving.

If the light stays on, it indicates that the SRS driver and front passenger airbag system and/or front passenger occupant classification system and “AIRBAG ON” and “AIRBAG OFF” indicator lights have a problem. If the light flashes, the SRS side airbag system and/or curtain shield airbag system have a problem.

The SRS warning light and “AIRBAG OFF” indicator light will come on if there is a malfunction in the front passenger occupant classification system.

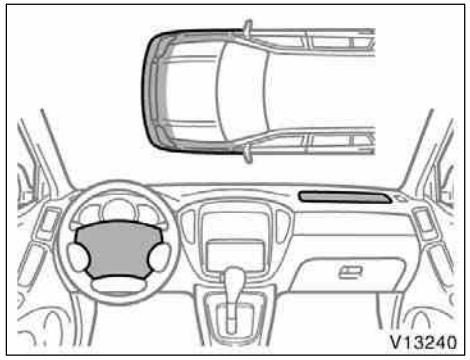

In the following cases, contact your Toyota dealer as soon as possible:

- The SRS front airbags have been inflated.
- The front of the vehicle (shaded in the illustration) was involved in an accident that was not severe enough to cause the SRS front airbags to inflate.
- The pad section of the steering wheel or front passenger airbag cover (shaded in the illustration) is scratched, cracked, or otherwise damaged.

NOTICE

Do not disconnect the battery cables before contacting your Toyota dealer.

—SRS side airbags and curtain shield airbags

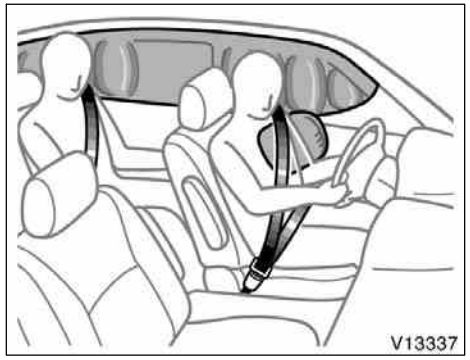

The SRS (Supplemental Restraint System) side airbags and curtain shield airbags are designed to provide further protection for the driver, front passenger and second outside passengers in addition to the primary safety protection provided by the seat belts.

In response to a severe side impact, the SRS side airbags and curtain shield airbags work with the seat belts to help reduce injury by inflating. The SRS side airbags help reduce injuries mainly to the driver’s or front passenger’s chest and the SRS curtain shield airbags help reduce injuries mainly to the driver’s, front passenger’s or second outside passenger’s head.

The SRS side airbag on the passenger seat will not activate if there is no passenger sitting in the front passenger seat. However, the side airbag on the passenger seat may deploy if luggage is put in the seat, or the seat belt is buckled up regardless of the presence of the occupant in the seat. (As for the front passenger occupant classification system, see “—Front passenger occupant classification system” on page 81 in this Section.)

The SRS curtain shield airbag on the passenger side are activated even with no passenger in the front seat or second outside seat.

The SRS curtain shield airbags may activate even when the side airbags are not activated.

Always wear your seat belt properly.

Your vehicle is equipped with a crash sensing and diagnostic module, which will record the use of the seat belt restraint system by the driver and front passenger when the SRS side airbags and curtain shield airbags are inflated.

⚠ CAUTION

- **The SRS side airbag and curtain shield airbag system is designed only as a supplement to the primary protection of the driver, and front passenger and second outside passenger seat belt systems. To ensure maximum protection in an accident, the driver and all passengers in the vehicle must wear their seat belts properly. Wearing a seat belt properly during an accident reduces the chances of death or serious injury or being thrown out of the vehicle. For instructions and precautions concerning the seat belt system, see “Seat belts” on page 54 in this Section.**

- **Do not allow anyone to lean his/her head or any part of his/her body against the door or the area of the seat, pillar, rear pillar or roof side rail from which the SRS side airbag and curtain shield airbag deploy even if he/she is a child seated in the child restraint system. It is dangerous if the SRS side airbag and curtain shield airbag inflate, and the impact of the deploying airbag could cause death or serious injury to the occupant.**

- **Improperly seated and/or restrained infants and children can be killed or seriously injured by the deploying airbags. An infant or child who is too small to use a seat belt should be properly secured using a child restraint system. Toyota strongly recommends that all infants and children be placed in the rear seats of the vehicle and properly restrained. The rear seats are the safest for infants and children. For instructions concerning the installation of a child restraint system, see “Child restraint” on page 85 in this Section.**

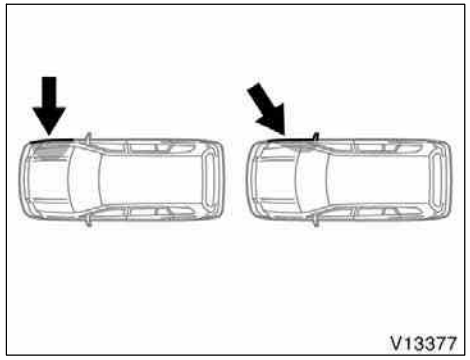

The SRS side airbag and curtain shield airbag system may not activate if the vehicle is subjected to a collision from the side at certain angles, or a collision to the side of the vehicle body other than the passenger compartment as shown in the illustration.

The SRS side airbags and curtain shield airbags are designed to inflate when the passenger compartment area suffers a severe impact from the side.

Always wear your seat belts properly.

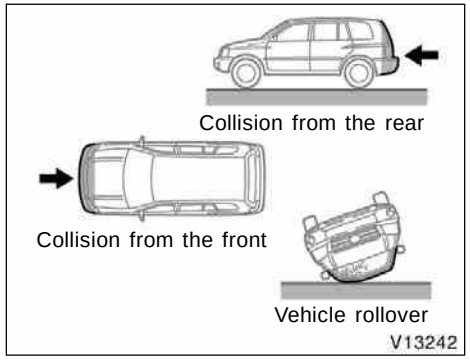

The SRS side airbags and curtain shield airbags are not generally designed to inflate if the vehicle is involved in a front or rear collision, if it rolls over, or if it is involved in a low–speed side collision.

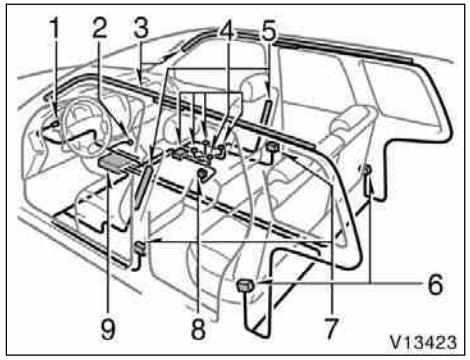

The SRS side airbag and curtain shield airbag system consists mainly of the following components, and their locations are shown in the illustration.

1. SRS warning light
2. “AIRBAG ON” and “AIRBAG OFF” indicator lights
3. Curtain shield airbag modules (airbag and inflator)
4. Front passenger occupant classification system (ECU and sensors)
5. Side airbag modules (airbag and inflator)
6. Curtain shield airbag sensors
7. Side and curtain shield airbag sensors
8. Front passenger’s seat belt buckle switch
9. Airbag sensor assembly

The SRS side airbag and curtain shield airbag system is controlled by the airbag sensor assembly. The airbag sensor assembly consists of a safing sensor and airbag sensor.

In a severe side impact, the side and curtain shield airbag sensor and/or the curtain shield airbag sensor trigger(s) the side airbag inflators and/or the curtain shield airbag inflators. At this time a chemical reaction in the inflators quickly fills the airbags with non–toxic gas to help restrain the lateral motion of the occupants.

When the airbags inflate, they produce a fairly loud noise and release some smoke and residue along with non–toxic gas. This does not indicate a fire. This smoke may remain inside the vehicle for some time, and may cause some minor irritation to the eyes, skin or breathing. Be sure to wash off any residue as soon as possible to prevent any potential skin irritation with soap and water. If you can safely exit from the vehicle, you should do so immediately.

Deployment of the airbags happens in a fraction of a second, so the airbags must inflate with considerable force. While the system is designed to reduce serious injuries, it may also cause minor burns or abrasions and swelling.

Front seats as well as parts of the front and rear pillars, and roof side rail may be hot for several minutes, but the airbags themselves will not be hot. The airbags are designed to inflate only once.

⚠ CAUTION

SRS side airbags and curtain shield airbags inflate with considerable force. To reduce the possibility of death or serious injury when they inflate, the driver, front passenger and second outside passengers must:

- **Wear their seat belts properly.**
- **Remain properly seated with their backs upright and against the seats at all times.**

- **Do not allow anyone to lean against the door when the vehicle is in use, since the side airbag and curtain shield airbag could inflate with considerable speed and force. Otherwise, he/she may be killed or seriously injured. Special care should be taken especially when you have a small child in the vehicle.**
- **Sit up straight and well back in the seat, distributing your weight evenly in the seat. Do not apply excessive weight to the outer side of the seats with a side airbag, and to the front pillar, rear pillar and roof side rail with a curtain shield airbag.**

- **Do not allow anyone to get his/her head closer to the area where the side airbag and curtain shield airbag inflate, since these airbags could inflate with considerable speed and force. Otherwise, he/she may be killed or seriously injured. Special care should be taken especially when you have a small child in the vehicle.**

- **Do not allow anyone to kneel on the passenger seat, facing the passenger’s side door, since the side airbag and curtain shield airbag could inflate with considerable speed and force. Otherwise, he/she may be killed or seriously injured. Special care should be taken especially when you have a small child in the vehicle.**

- **Do not allow anyone to get his/her head or hands out of windows since the curtain shield airbags could inflate with considerable speed and force. Otherwise, he/she may be killed or seriously injured. Special care should be taken especially when you have a small child in the vehicle.**

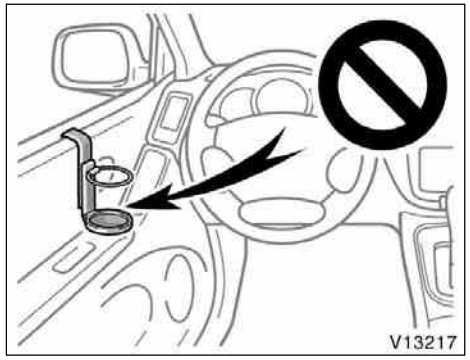

- **Do not attach a cup holder or any other device or object on or around the door. When the side airbag inflates, the cup holder or any other device or object will be thrown with great force or the side airbag may not activate correctly, resulting in death or serious injury. Likewise, the driver and front passenger should not hold objects in their arms or on their knees.**

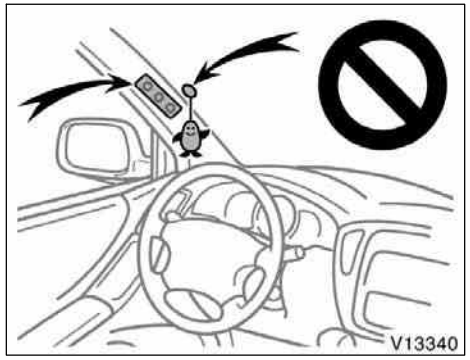

- **Do not attach a microphone or any other device or object around the area where the curtain shield airbag activates such as on the windshield glass, side door glass, front and rear pillars, roof side rail and assist grips. When the curtain shield airbag inflates, the microphone or other device or object will be thrown away with great force or the curtain shield airbag may not activate correctly, resulting in death or serious injury.**

- **Do not hook a hanger, heavy or sharp pointed objects on the coat hook. If the curtain shield airbag inflates, those items will be thrown away with great force or the curtain shield airbag may not activate correctly, resulting in death or serious injury. When you hang clothes, hang them on the coat hook directly.**
- **Do not use seat accessories which cover the parts where the side airbags inflate. Such accessories may prevent the side airbags from activating correctly, causing death or serious injury.**
- **Do not modify or replace the seats or upholstery of the seats with side airbags. Such changes may prevent the side airbag system from activating correctly, disable the system or cause the side airbags to inflate accidentally, resulting in death or serious injury.**

- **Do not disassemble or repair the front and rear pillars and roof side rails containing the curtain shield airbags. Such changes may disable the system or cause the curtain shield airbags to inflate accidentally, resulting in death or serious injury.**

Failure to follow these instructions can result in death or serious injury. Consult your Toyota dealer about any repair and modification.

If you wish to modify your vehicle for the handicapped, consult with your Toyota dealer. It may dangerously interfere with the SRS side airbags and curtain shield airbags operation.

NOTICE

Do not perform any of the following changes without consulting your Toyota dealer. Such changes can interfere with proper operation of the SRS side airbag and curtain shield airbag system in some cases.

- ***Installation of electronic devices such as a mobile two–way radio, cassette tape player or compact disc player***
- ***Modification of the suspension system***
- ***Modification of the side structure of the passenger compartment***
- ***Repairs made on or near the console or front seat***

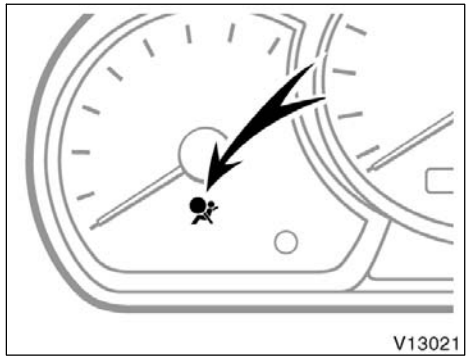

This indicator comes on when the ignition key is turned to the “ON” position. It goes off after about 6 seconds. This means the SRS side airbags and curtain shield airbags are operating properly.

This warning light system monitors the airbag sensor assembly, front airbag sensors, side and curtain shield airbag sensors, curtain shield airbag sensors, driver’s seat position sensor, driver’s seat belt buckle switch, front passenger occupant classification system, “AIRBAG ON” indicator light, “AIRBAG OFF” indicator light, front passenger’s seat belt buckle switch, seat belt pretensioner assemblies, inflators, warning light, interconnecting wiring and power sources. (For details, see “Service reminder indicators and warning buzzers” on page 129 in Section 1–6.)

If either of the following conditions occurs, this indicates a malfunction of the airbags or seat belt pretensioners. Contact your Toyota dealer as soon as possible.

- When the ignition key is turned to the “ON” position, the light does not come on, remains on for more than 6 seconds or flashes.
- The light comes on or starts flashing while driving.

If the light stays on, it indicates that the SRS driver and front passenger airbag system and/or front passenger occupant classification system and “AIRBAG ON” and “AIRBAG OFF” indicator lights have a problem. If the light flashes, the SRS side airbag system and/or curtain shield airbag system have a problem.

The SRS warning light and “AIRBAG OFF” indicator light will come on if there is a malfunction in the front passenger occupant classification system.

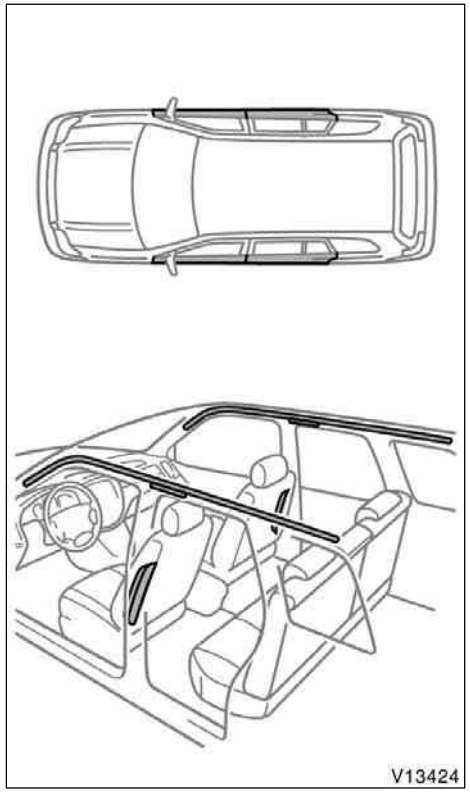

In the following cases, contact your Toyota dealer as soon as possible:

- Any of the SRS side airbags and curtain shield airbags have been inflated.
- The portion of the doors (shaded in the illustration) was involved in an accident that was not severe enough to cause the SRS side airbags and curtain shield airbags to inflate.
- The surface of the seats with the side airbag (shaded in the illustration) is scratched, cracked, or otherwise damaged.
- The portion of the front pillars, rear pillars or roof side rail garnishes (padding) containing the curtain shield airbags inside (shaded in the illustration) is scratched, cracked, or otherwise damaged.

NOTICE
Do not disconnect the battery cables before contacting your Toyota dealer.

—Front passenger occupant classification system

Your vehicle is equipped with a front passenger occupant classification system. This system detects the conditions 1—4 in the table on page 83 and based on these conditions activates or deactivates front passenger airbags. The system monitors the weight and load on the front passenger seat, and the seat belt buckle switch to determine conditions 1—4. In order for the system to detect the conditions correctly, do not do any of the following.

- Put a heavy load in the front passenger seat.
- Attach a seatback table to the front passenger seat seatback.
- Put weight on the front passenger by putting your hands or feet on the front passenger seat seatback from the rear passenger seat.

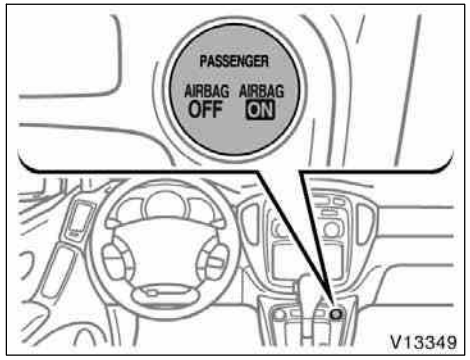

The “AIRBAG ON” and “AIRBAG OFF” indicator lights indicate the actuation of the front passenger airbag, side airbag on the front passenger seat and front passenger’s seat belt pretensioner.

The “AIRBAG OFF” indicator light will be illuminated when the ignition switch is in the “ON” position with the condition 2 in the table shown below.

If the front passenger occupant classification system determines that a person of adult size sits in the front passenger seat but the “AIRBAG OFF” indicator light is illuminated, one of the following is likely to have occurred:

- A rear passenger lifts the front passenger seat cushion with their legs.
- Objects are placed under the front passenger seat.
- The front passenger seatback is in contact with the second seat.

To ensure the system correctly detects an adult sitting in the front passenger seat, make sure the above do not occur.

Make sure that the “AIRBAG ON” indicator light is illuminated when an adult is seated in the front passenger seat. If the “AIRBAG OFF” indicator light is illuminated, ask the passenger to sit up straight, well back in the seat, and with the seat belt worn correctly. If the “AIRBAG OFF” indicator light still remains illuminated, either ask the passenger to move to the rear seat, or if that is not possible, move the front passenger seat fully rearward.

The “AIRBAG ON” and “AIRBAG OFF” indicator lights will be illuminated initially when the ignition key is turned to the “ON” position. After about 4 seconds, they will go off. After that, the front passenger occupant classification system operates and judges which indicator light be illuminated.

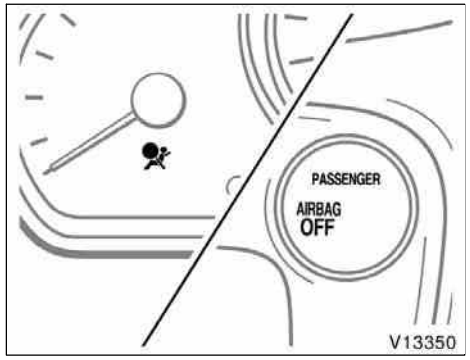

The SRS warning light and “AIRBAG OFF” indicator light will come on if there is a malfunction in the front passenger occupant classification system.

Condition and operation in the front passenger occupant classification system

Condition detected by the front passenger occupant classification system	Indicator/warning light			Devices			
	“AIRBAG ON” and “AIRBAG OFF” indicator lights	SRS warning light	Front passenger’s seat belt reminder light	Front passenger airbag	Side airbag on the front passenger seat	Curtain shield airbag in the front passenger side	Front passenger’s seat belt pretensioner
1. Adult*1	“AIRBAG ON”	Off	Flashing*4	Activated			
2. Child*2 or child restraint system*3	“AIRBAG OFF”	Off	Flashing*4	Deactivated		Activated	Activated
3. Unoccupied	Not illuminated	Off	Off	Deactivated			Deactivated
4. There is a malfunction in the system	“AIRBAG OFF”	On	Off	Deactivated			Activated

*1: The system judges a person of adult size as an adult. When a smaller adult sits in the front passenger seat, the system may recognize him/her as a child depending on his/her physique and posture.

*2: When a larger child who has outgrown a child restraint system sits in the front passenger seat, the system may recognize him/her as an adult depending on his/her physique or posture.

*3: Never install a rear–facing child restraint system on the front passenger seat. A forward–facing child restraint system should only be installed on the front passenger seat when it is unavoidable. (See “Child restraint” on page 85 in this Section as for installing the child restraint system.)

*4:
In the event that the front passenger does not wear a seat belt.

⚠ CAUTION

To avoid potential death or serious injury when the front passenger occupant classification system does not detect the conditions correctly, observe the following.

- **Do not recline the front passenger seat seatback so that it interferes with a second seat as it may cause the “AIRBAG OFF” indicator light be illuminated. If the seatback interferes with the second seat, return the seatback to a position where it does not interfere with the second seat.**

  Avoid reclining the front passenger seat seatback too much while the vehicle is moving, as it lessens the effectiveness of the seat belt.

- **Make sure the “AIRBAG ON” indicator light is illuminated when using the seat belt extender for the front passenger seat. If the “AIRBAG OFF” indicator light is illuminated, disconnect the extender tongue from the seat belt buckle, then reconnect the seat belt. Reconnect the seat belt extender after making sure the “AIRBAG ON” indicator light is illuminated. If you use the seat belt extender while the “AIRBAG OFF” indicator light is illuminated, the front passenger airbag and side airbag on the front passenger side may not activate correctly, which could cause death or serious injury in the event of collision.**

- **If an adult sits in the front passenger seat, the “AIRBAG ON” indicator light should be illuminated. If the “AIRBAG OFF” indicator light is illuminated, ask the passenger to sit up straight, well back in the seat, feet on the floor, and with the seat belt worn correctly. If the “AIRBAG OFF” indicator light still remains illuminated, either ask the passenger to move to the rear seat, or if that is not possible, move the front passenger seat fully rearward.**
- **Wear the seat belt properly.**
- **Make sure the front passenger’s seat belt tab has not been left inserted into the buckle before someone sits in the front passenger seat.**
- **Do not put a heavy load in the front passenger seatback pocket or attach a seatback table to the front passenger seat seatback.**
- **Do not let a rear passenger lift the front passenger seat with their feet or press on the seatback with their legs.**

- **Do not put objects under the front passenger seat.**
- **Child restraint systems installed on the second seat should not contact the front seatbacks.**

The “AIRBAG ON” indicator light may be illuminated (the front passenger airbag and side airbag on the front passenger seat may deploy) even if observing the above cautions, when a child sits in, or a forward–facing child restraint system is installed on the front passenger seat. Refer to all the cautions in “SRS airbags” on page 66 and “Child restraint” on page 85 in this Section.

Child restraint—
—Child restraint precautions

Toyota strongly urges the use of appropriate child restraint systems for children.

The laws of all 50 states in the U.S.A. and Canada now require the use of a child restraint system.

Your vehicle conforms to SAEJ1819.

If a child is too large for a child restraint system, the child should sit in the rear seat and must be restrained using the vehicle’s seat belt. See “Seat belts” on page 54 in this Section for details.

CAUTION

- **For effective protection in automobile accidents and sudden stops, a child must be properly restrained, using a seat belt or child restraint system depending on the age and size of the child. Holding a child in your arms is not a substitute for a child restraint system. In an accident, the child can be crushed against the windshield, or between you and the vehicle’s interior.**

- **Toyota strongly urges use of a proper child restraint system which conforms to the size of the child, installed on the rear seat. According to accident statistics, the child is safer when properly restrained in the rear seat than in the front seat.**
- **Never install a rear–facing child restraint system on the front passenger seat even if the “AIRBAG OFF” indicator light is illuminated. In the event of an accident, the force of the rapid inflation of the front passenger airbag can cause death or serious injury to the child if the rear–facing child restraint system is installed on the front passenger seat.**

- **A forward–facing child restraint system should be allowed to be installed on the front passenger seat only when it is unavoidable. Always move the seat as far back as possible even if the “AIRBAG OFF” indicator light is illuminated, because the front passenger airbag could inflate with considerable speed and force. Otherwise, the child may be killed or seriously injured.**
- **On vehicles with side airbags and curtain shield airbags, do not allow the child to lean his/her head or any part of his/her body against the door or the area of the seat, front or rear pillar or roof side rail from which the side airbags or curtain shield airbags deploy even if the child is seated in the child restraint system. It is dangerous if the side airbag and curtain shield airbag inflate, and the impact could cause death or serious injury to the child.**

- **Do not use the seat belt extender when installing a child restraint system on the front or rear passenger seat. If installing a child restraint system with the seat belt extender connected to the seat belt, the seat belt will not securely hold the child restraint system, which could cause death or serious injury to the child or other passengers in the event of collision.**
- **Make sure that you have complied with all installation instructions provided by the child restraint manufacturer and that the system is properly secured. If it is not secured properly, it may cause death or serious injury to the child in the event of a sudden stop or accident.**

—Child restraint system

A child restraint system for a small child or baby must itself be properly restrained on the seat with the lap portion of the lap/shoulder belt. You must carefully consult the manufacturer’s instructions which accompany the child restraint system.

To provide proper restraint, use a child restraint system following the manufacturer’s instructions about the appropriate age and size of the child for the child restraint system.

Install the child restraint system correctly following the instructions provided by its manufacturer. General directions are also provided under the following illustrations.

The child restraint system should be installed on the rear seat. According to accident statistics, the child is safer when properly restrained in the rear seat than in the front seat.

When not using the child restraint system, keep it secured with the seat belt or place it somewhere other than the passenger compartment. This will prevent it from injuring passengers in the event of a sudden stop or accident.

—Types of child restraint system

Child restraint systems are classified into the following 3 types depending on the child’s age and size.

(A) Infant seat
(B) Convertible seat
(C) Booster seat

Install the child restraint system following the instructions provided by its manufacturer.

Your vehicle has anchor brackets for securing the top strap of a child restraint system.

For instructions about how to use the anchor bracket, see “—Using a top strap” on page 99 in this Section.

The child restraint lower anchorages approved for your vehicle may also be used. See “—Installation with child restraint lower anchorages” on page 101 in this Section.

(A) Infant seat

(C) Booster seat

(B) Convertible seat

—Installation with seat belt

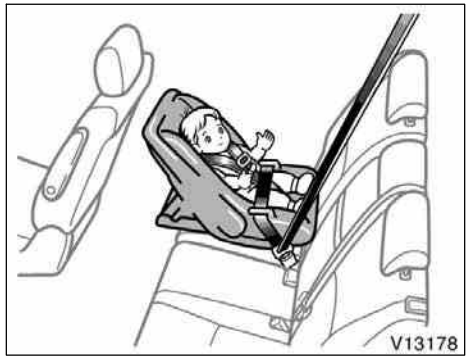

(A) INFANT SEAT INSTALLATION

An infant seat must be used in rear–facing position only.

⚠ CAUTION

- **Never install a rear–facing child restraint system on the front passenger seat even if the “AIRBAG OFF” indicator light is illuminated. In the event of an accident, the impact of the rapid inflation of the front passenger airbag could cause death or serious injury to the child if the rear–facing child restraint system is installed on the front passenger seat.**

- **Do not install a child restraint system on the second (or third) seat if it interferes with the lock mechanism of the front (or second) seats. Otherwise, the child or front (or second) seat occupant(s) may be killed or seriously injured in case of sudden braking or a collision.**
- **If the driver’s seat position does not allow sufficient space for safe installation, install the child restraint system on the right second seat.**

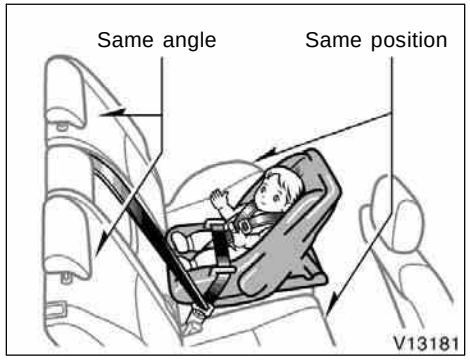

- **When installing a child restraint system in the second seat center position, adjust both seat cushions to the same position and align both seatbacks at the same angle. Otherwise, the child restraint system cannot be securely restrained and this may cause death or serious injuries in a collision.**

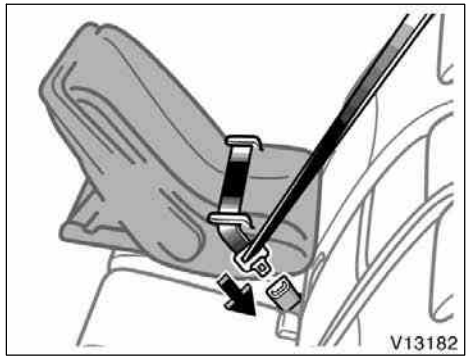

1. Run the lap and shoulder belt through or around the infant seat following the instructions provided by its manufacturer and insert the tab into the buckle taking care not to twist the belt. Keep the lap portion of the belt tight.

⚠ CAUTION

- **After inserting the tab, make sure the tab and buckle are locked and that the lap and shoulder portions of the belt are not twisted.**
- **Do not insert coins, clips, etc. in the buckle as this may prevent your child from properly latching the tab and buckle.**
- **If the seat belt does not function normally, it cannot protect your child from death or serious injury. Contact your Toyota dealer immediately. Do not install the child restraint system on the seat until the seat belt is fixed.**

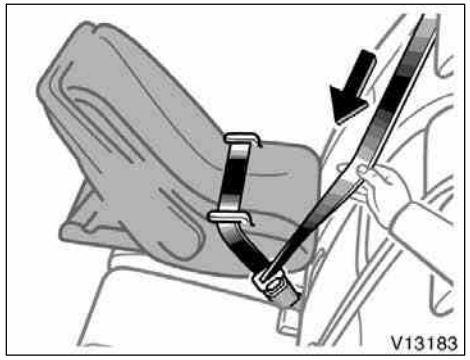

2. Fully extend the shoulder belt to put it in the lock mode. When the belt is then retracted even slightly, it cannot be extended.

To hold the infant seat securely, make sure the belt is in the lock mode before letting the belt retract.

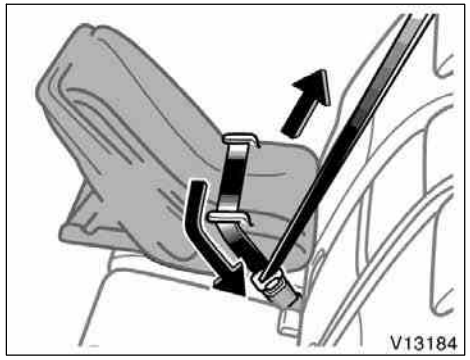

3. While pressing the infant seat firmly against the seat cushion and seatback, let the shoulder belt retract as far as it will go to hold the infant seat securely.

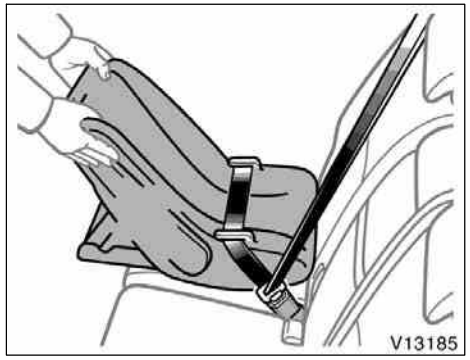

⚠ CAUTION

Push and pull the child restraint system in different directions to be sure it is secure. Follow all the installation instructions provided by its manufacturer.

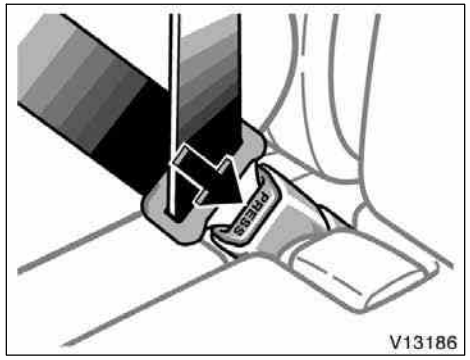

4. To remove the infant seat, press the buckle release button and allow the belt to retract completely. The belt will move freely again and be ready to work for an adult or older child passenger.

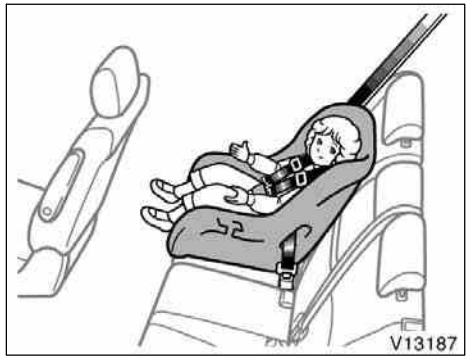

(B) CONVERTIBLE SEAT INSTALLATION

A convertible seat must be used in forward–facing or rear–facing position depending on the age and size of the child. When installing, follow the manufacturer’s instructions about the applicable age and size of the child as well as directions for installing the child restraint system.

Install the child restraint system on the front passenger seat only when it is unavoidable. Your vehicle is equipped with a front passenger occupant classification system. In order to activate the occupant classification system correctly, install the forward–facing child restraint system on the front passenger seat in the following order:

1. Turn the ignition key to the “ON” position.
2. Move the front passenger seat to the rearward position.
3. Put the child restraint system on the front passenger seat without putting your weight on the front passenger seat.
4. Insert the seat belt tab into the seat belt buckle.
5. Fully extend the shoulder belt to put it in the lock mode. When the belt is then retracted even slightly, it cannot be extended. To hold the seat securely, make sure the belt is in the lock mode before letting the belt retract.

6. While pressing the convertible seat firmly against the seat cushion and seatback, let the shoulder belt retract as far as it will go to hold the convertible seat securely.

⚠ CAUTION

Push and pull the child restraint system in different directions to be sure it is secure. Follow all the installation instructions provided by its manufacturer.

7. Put a child on the child restraint system and secure the child, complying with the instructions provided by the child restraint system manufacturer.

The “AIRBAG OFF” indicator light should be illuminated when the ignition key is “ON” and the child is in the child restraint system after following these procedures. The “AIRBAG OFF” indicator light indicates the SRS front passenger airbag and side airbag on the passenger side will not deploy. If the “AIRBAG ON” indicator light is illuminated, remove the child restraint system and reinstall it with the ignition key in the “ACC” or “LOCK” position. If the “AIRBAG ON” indicator light is illuminated when the ignition key is turned to the “ON” position, then the SRS front passenger airbag and side airbag on the passenger side may deploy in an accident. Do not drive the vehicle in this condition. Remove the child restraint system and contact your Toyota dealer.

⚠ CAUTION

- **Never install a rear–facing child restraint system on the front passenger seat. A forward–facing child restraint system should only be installed on the front passenger seat when unavoidable. If you must install the child restraint system on the front passenger seat, put the seat in its most rearward position, and install the forward–facing child restraint system in the proper order. Otherwise, the front passenger occupant classification system can not detect the presence of the child restraint system and the front passenger airbag and side airbag on the front passenger seat could deploy.**

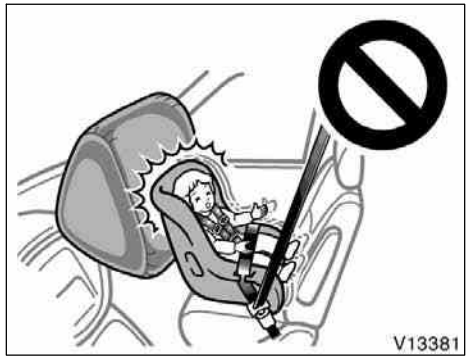

- **Never install a rear–facing child restraint system on the front passenger seat even if the “AIRBAG OFF” indicator light is illuminated. In the event of an accident, the impact of the rapid inflation of the front passenger airbag could cause death or serious injury to the child if the rear–facing child restraint system is installed on the front passenger seat.**

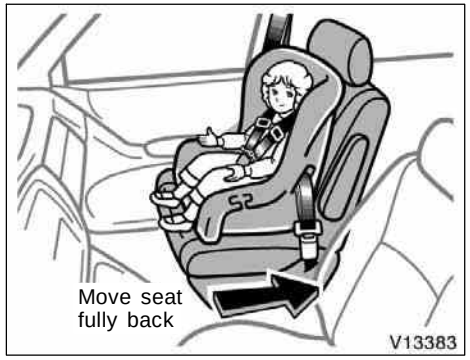

- **A forward–facing child restraint system should be allowed to be installed on the front passenger seat only when it is unavoidable. Always move the seat as far back as possible even if the “AIRBAG OFF” indicator light is illuminated, because the front passenger airbag could inflate with considerable speed and force. Otherwise, the child may be killed or seriously injured.**

- **On vehicles with side airbags and curtain shield airbags, do not allow the child to lean his/her head or any part of his/her body against the door or the area of the seat, front or rear pillar or roof side rail from which the side airbags or curtain shield airbags deploy even if the child is seated in the child restraint system. It is dangerous if the side airbag and curtain shield airbag inflate, and the impact could cause death or serious injury to the child.**

- **Do not install a child restraint system on the second (or third) seat if it interferes with the lock mechanism of the front (or second) seats. Otherwise, the child or front (or second) seat occupant(s) may be killed or seriously injured in case of sudden braking or a collision.**
- **If the driver’s seat position does not allow sufficient space for safe installation, install the child restraint system on the right second seat.**

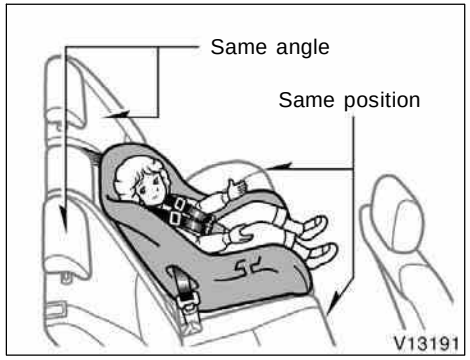

- **When installing a child restraint system in the second seat center position, adjust both seat cushions to the same position and align both seatbacks at the same angle. Otherwise, the child restraint system cannot be securely restrained and this may cause death or serious injuries in a collision.**

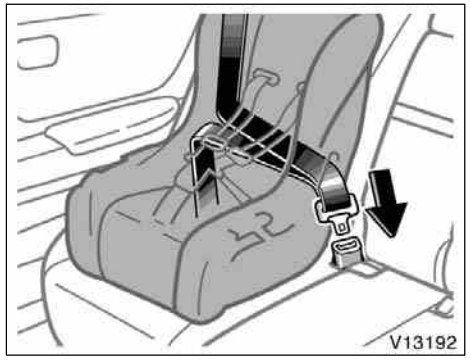

1. Run the lap and shoulder belt through or around the convertible seat following the instructions provided by its manufacturer and insert the tab into the buckle taking care not to twist the belt. Keep the lap portion of the belt tight.

⚠ CAUTION

- **After inserting the tab, make sure the tab and buckle are locked and that the lap and shoulder portions of the belt are not twisted.**
- **Do not insert coins, clips, etc. in the buckle as this may prevent your child from properly latching the tab and buckle.**
- **If the seat belt does not function normally, it cannot protect your child from death or serious injury. Contact your Toyota dealer immediately. Do not install the child restraint system on the seat until the seat belt is fixed.**

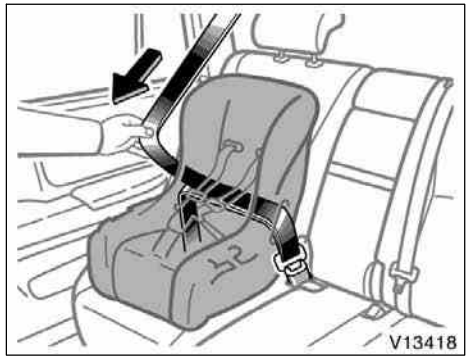

2. Fully extend the shoulder belt to put it in the lock mode. When the belt is then retracted even slightly, it cannot be extended.

To hold the convertible seat securely, make sure the belt is in the lock mode before letting the belt retract.

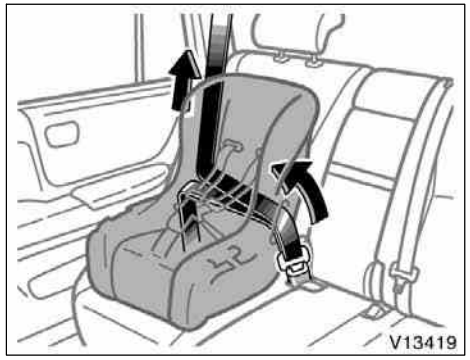

3. While pressing the convertible seat firmly against the seat cushion and seatback, let the shoulder belt retract as far as it will go to hold the convertible seat securely.

⚠ CAUTION

Push and pull the child restraint system in different directions to be sure it is secure. Follow all the installation instructions provided by its manufacturer.

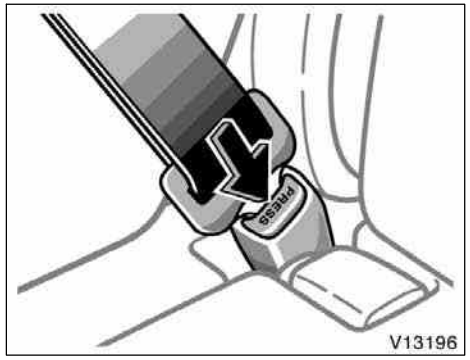

4. To remove the convertible seat, press the buckle release button and allow the belt to retract completely. The belt will move freely again and be ready to work for an adult or older child passenger.

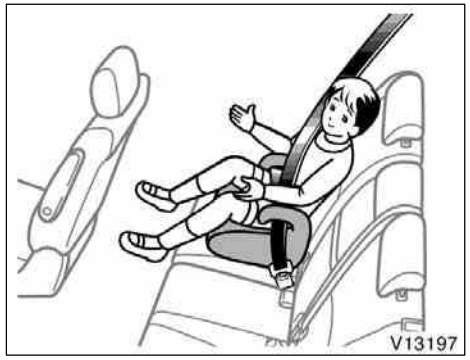

(C) BOOSTER SEAT INSTALLATION

A booster seat must be used in forward–facing position only.

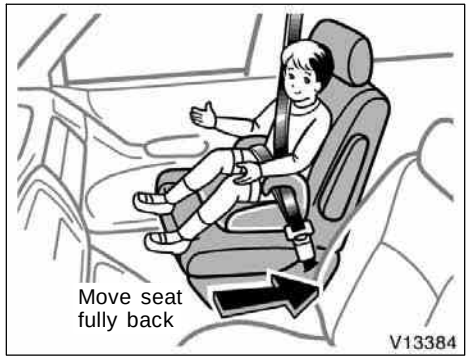

CAUTION

- **A forward–facing child restraint system should be allowed to be installed on the front passenger seat only when it is unavoidable. Always move the seat as far back as possible even if the “AIRBAG OFF” indicator light is illuminated, because the front passenger airbag could inflate with considerable speed and force. Otherwise, the child may be killed or seriously injured.**

- **On vehicles with side airbags and curtain shield airbags, do not allow the child to lean his/her head or any part of his/her body against the door or the area of the seat, front or rear pillar or roof side rail from which the side airbags or curtain shield airbags deploy even if the child is seated in the child restraint system. It is dangerous if the side airbag and curtain shield airbag inflate, and the impact could cause death or serious injury to the child.**

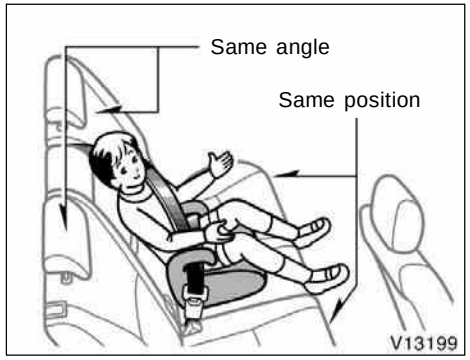

- **When installing a child restraint system in the second seat center position, adjust both seat cushions to the same position and align both seatbacks at the same angle. Otherwise, the child restraint system cannot be securely restrained and this may cause death or serious injuries in a collision.**

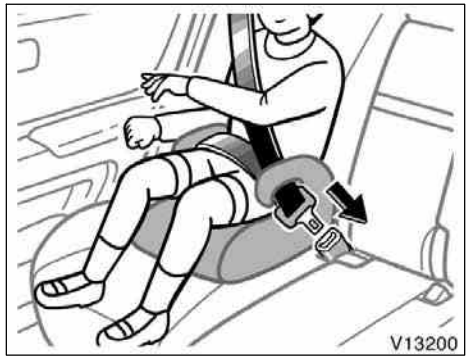

1. Sit the child on a booster seat. Run the lap and shoulder belt through or around the booster seat and across the child following the instructions provided by its manufacturer and insert the tab into the buckle taking care not to twist the belt.

Make sure the shoulder belt is correctly across the child’s shoulder and that the lap belt is positioned as low as possible on child’s hips. See “Seat belts” on page 54 in this Section for details.

⚠ CAUTION

- **Always make sure the shoulder belt is positioned across the center of child’s shoulder. The belt should be kept away from child’s neck, but not falling off child’s shoulder. Otherwise, the child may be killed or seriously injured in case of sudden braking or a collision.**
- **Both high–positioned lap belts and loose–fitting belts could cause death or serious injuries due to sliding under the lap belt during a collision or other unintended event. Keep the lap belt positioned as low on a child’s hips as possible.**
- **For child’s safety, do not place the shoulder belt under child’s arm.**
- **After inserting the tab, make sure the tab and buckle are locked and that the lap and shoulder portions of the belt are not twisted.**
- **Do not insert coins, clips, etc. in the buckle as this may prevent your child from properly latching the tab and buckle.**

- **If the seat belt does not function normally, it cannot protect your child from death or serious injury. Contact your Toyota dealer immediately. Do not install the child restraint system on the seat until the seat belt is fixed.**

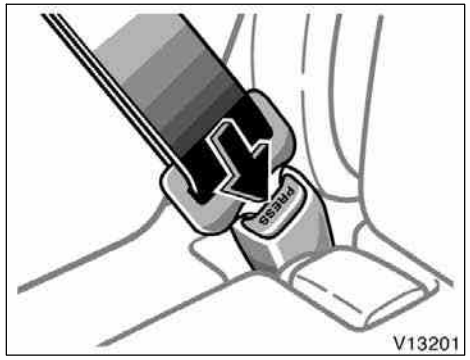

2. To remove the child restraint system, press the buckle release button and allow the belt to retract.

—Using a top strap

Follow the procedure below for a child restraint system that requires the use of a top strap.

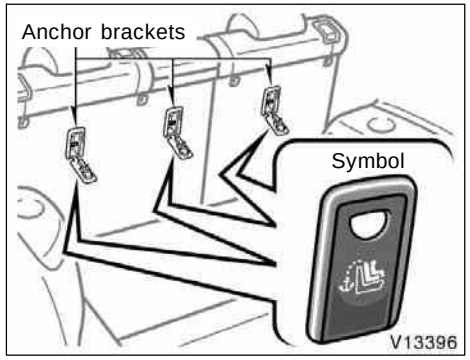

Use the anchor brackets behind the second seat seatbacks to secure the top strap.

Anchor brackets are installed for each seating position of the second seat.

This symbol indicates the locations of user ready anchor brackets.

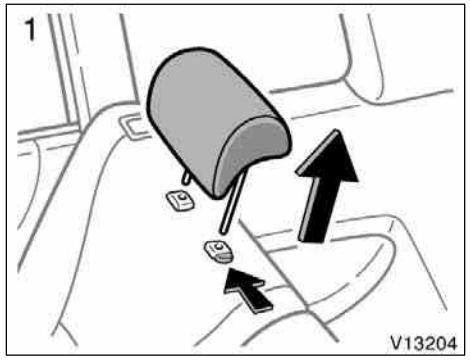

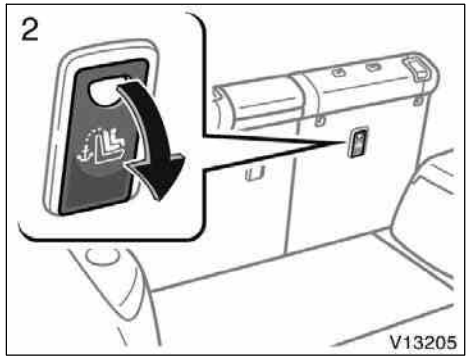

TO USE THE ANCHOR BRACKET:

1. Remove the head restraint.

2. Open the anchor bracket cover with the symbol as shown in the illustration.

3. Fix the child restraint system with the seat belt.

Latch the hook onto the anchor bracket and tighten the top strap.

For instructions to install the child restraint system, see “Child restraint” on page 85 in this Section.

⚠ CAUTION

Make sure the top strap is securely latched, and check that the child restraint system is secure by pushing and pulling it in different directions. Follow all the installation instructions provided by its manufacturer.

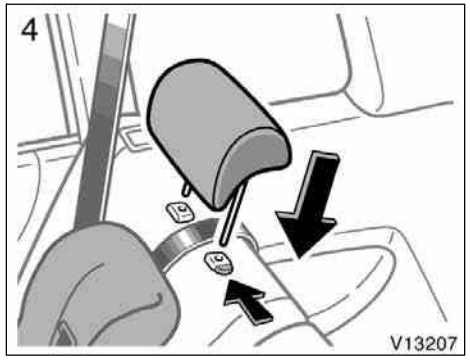

4. Replace the head restraint and lift it up to the uppermost lock position.

Be sure to close the cover when the anchor bracket is not in use.

—Installation with child restraint lower anchorages

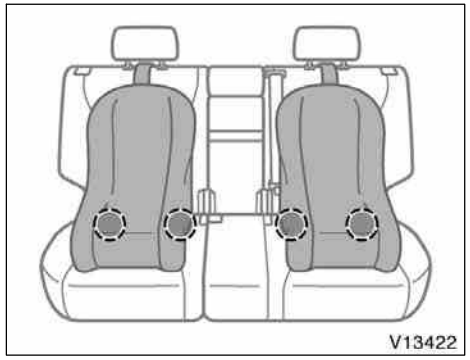

Lower anchorages for the child restraint systems complying with the FMVSS225 or CMVSS210.2 specifications are installed in the second seat.

The anchorages are installed in the seat cushion of both outside second seats.

Child restraint systems complying with the FMVSS225 or CMVSS210.2 specification can be fixed to these anchorages. In this case, it is not necessary to fix the child restraint system with a seat belt on the vehicle.

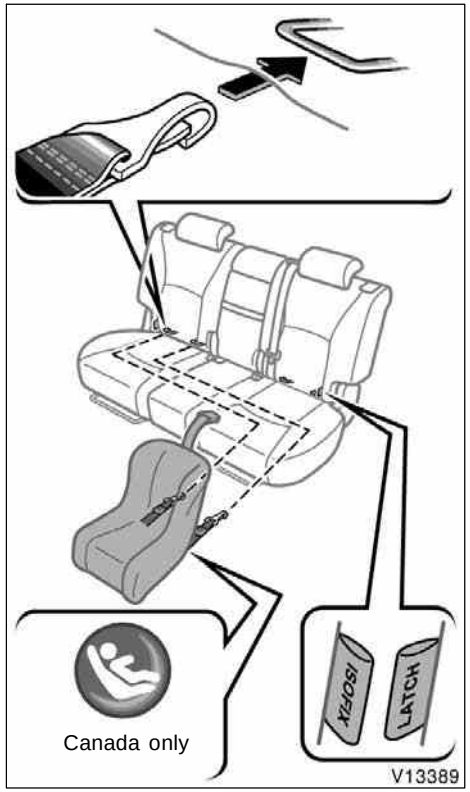

Type A

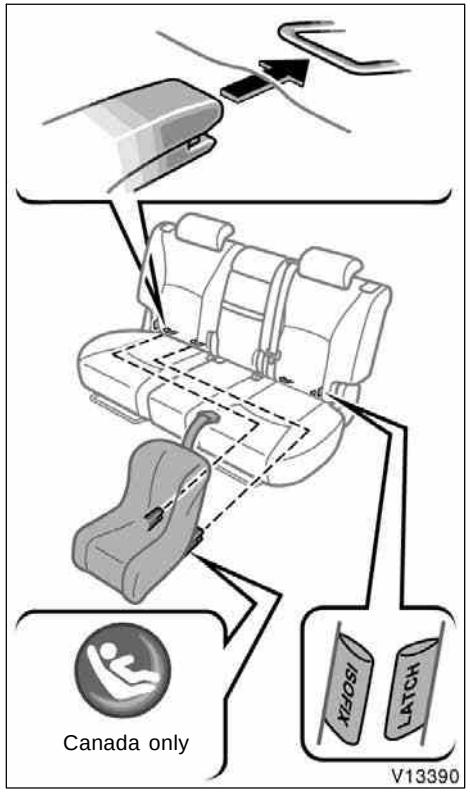

Type B

For owners in Canada

The symbol on a child restraint system indicates the presence of a lower connector system.

CHILD RESTRAINT SYSTEM INSTALLATION

Type A—

1. **Widen the clearance between the seat cushion and seatback a little and confirm the position of the lower anchorages below the tag in the seatback.**
2. **Latch the hooks of lower straps onto the anchorages and tighten the lower straps.**

Type B—

1. **Widen the clearance between the seat cushion and seatback a little and confirm the position of the lower anchorages below the tag in the seatback.**
2. **Latch the buckles onto the anchorages.**

If your child restraint system has a top strap, it should be anchored. (For the installation of the top strap, see “—Using a top strap” on page 99 in this Section.)

For the installation details, refer to the instruction manual equipped with each product.

⚠ CAUTION

- **When using the lower anchorages for the child restraint system, be sure that there are no irregular objects around the anchorages or that the seat belt is not caught.**
- **Push and pull the child restraint system in different directions to be sure it is secure. Follow all the installation instructions provided by its manufacturer.**
- **When using the lower anchorages for the child restraint system, ensure that the seat is moved to the rear–most position, with the seatback close to the child restraint system.**
- **After securing the child restraint system, never slide or recline the seat.**

- **Do not install a child restraint system on the second seat if it interferes with the lock mechanism of the front seats. Otherwise, the child or front seat occupant(s) may be killed or seriously injured in case of sudden braking or a collision.**

SECTION 1–4

OPERATION OF INSTRUMENTS AND CONTROLS

Steering wheel and Mirrors

Tilt steering wheel 106
Outside rear view mirrors 106
Anti–glare inside rear view mirror 108
Auto anti–glare inside rear view mirror 109
Sun visors 110

Tilt steering wheel

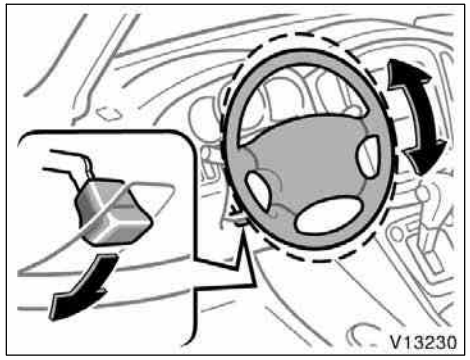

To change the steering wheel angle, hold the steering wheel, push down the lock release lever, tilt the steering wheel to the desired angle and return the lever to its original position.

⚠ CAUTION

- **Do not adjust the steering wheel while the vehicle is moving. Doing so may cause the driver to mishandle the vehicle and an accident may occur resulting in death or serious injuries.**
- **After adjusting the steering wheel, try moving it up and down to make sure it is locked in position.**

Outside rear view mirrors—

Adjust the mirror so that you can just see the side of your vehicle in the mirror.

Be careful when judging the size or distance of any object seen in the outside rear view mirror on the passenger’s side because it is a convex mirror. Any object seen in a convex mirror will look smaller and farther away than when seen in a flat mirror.

On some models, when you push the outside rear view mirror defogger switch, the heater panels in the outside rear view mirrors will quickly clear the mirror surface. (See “Rear window and outside rear view mirror defoggers and windshield wiper de–icer” on page 122 in Section 1–5.)

CAUTION

- **Do not adjust the mirror while the vehicle is moving. Doing so may cause the driver to mishandle the vehicle and an accident may occur resulting in death or serious injuries.**
- **Since the mirror surfaces can get hot, do not touch them when the defogger switch is on.**

—Power rear view mirror control

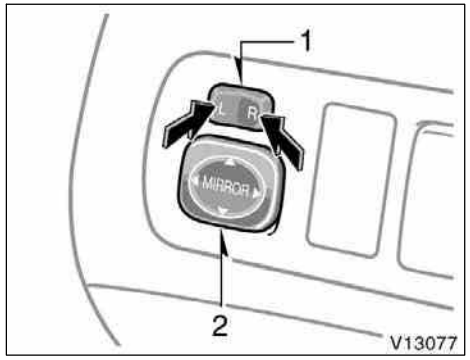

To adjust a mirror, use the switches.

1. Master switch—To select the mirror to be adjusted
   Push the switch to “L” (left) or “R” (right).
2. Control switch—To move the mirror
   Push the switch in the desired direction.

Mirrors can be adjusted when the key is in the “ACC” or “ON” position.

NOTICE

If ice should jam the mirror, do not operate the control or scrape the mirror face. Use a spray de–icer to free the mirror.

—Folding rear view mirrors

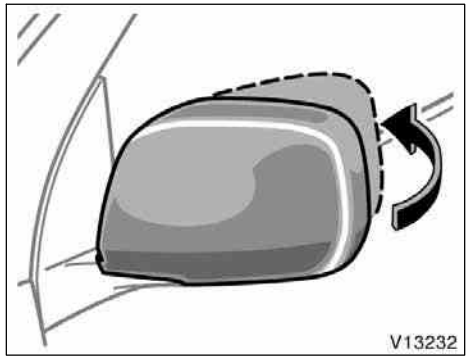

The rear view mirrors can be folded backward for parking in compact areas.

To fold the rear view mirror, push backward.

⚠ CAUTION

Do not drive with the mirrors folded backward. Both the driver and passenger side rear view mirrors must be extended and properly adjusted before driving.

Anti–glare inside rear view mirror

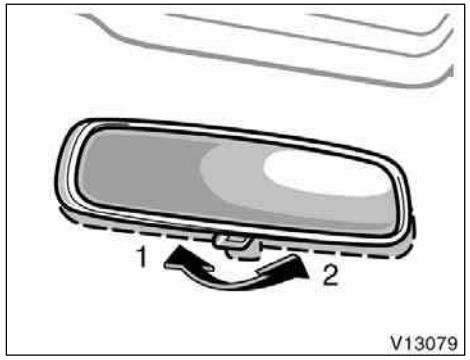

Adjust the mirror so that you can just see the rear of your vehicle in the mirror.

To reduce glare from the headlights of the vehicle behind you during night driving, operate the lever on the lower edge of the mirror.

Daylight driving—Lever at position 1

The reflection in the mirror has greater clarity at this position.

Night driving—Lever at position 2

Remember that by reducing glare you also lose some rear view clarity.

⚠ CAUTION

Do not adjust the mirror while the vehicle is moving. Doing so may cause the driver to mishandle the vehicle and an accident may occur resulting in death or serious injuries.

Auto anti–glare inside rear view mirror

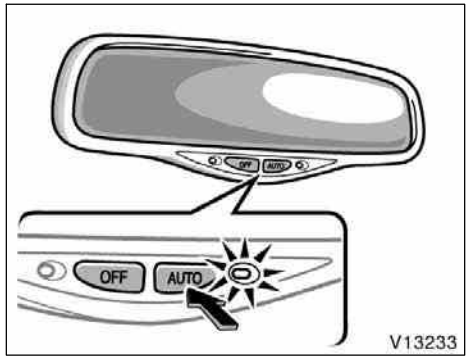

Type A

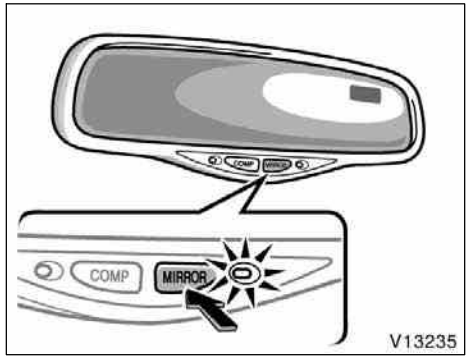

Type B

Adjust the mirror so that you can just see the rear of your vehicle in the mirror.

This mirror is equipped with auto anti–glare function. The function is designed to reduce glare from the headlights of the vehicle behind you during night driving.

When the ignition key is inserted and turned on, the inside rear view mirror always turns on in the automatic function mode.

The indicator illuminates to show you that the function is on.

In automatic function mode, if the mirror detects light from the headlights of the vehicle behind you, the mirror surface darkens slightly to reduce the reflected light.

To turn off the automatic function:
Type A—Push the “OFF” switch.
Type B—Push the “MIRROR” switch.

To turn on the automatic function again:
Type A—Push the “AUTO” switch.
Type B—Push the “MIRROR” switch.

Adjust it before driving so that the rear view is in the best condition.

When the inside air temperature is low, it may take little longer for the mirror to darken in response to the detection of headlights.

⚠ CAUTION

Do not adjust the mirror while the vehicle is moving. Doing so may cause the driver to mishandle the vehicle and an accident may occur resulting in death or serious injuries.

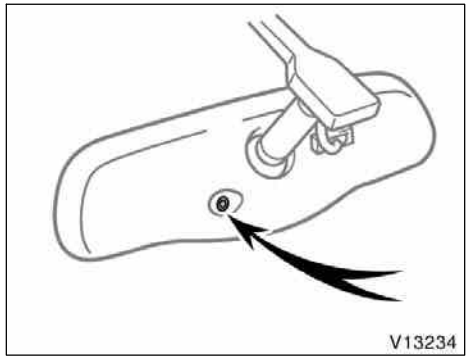

Type A

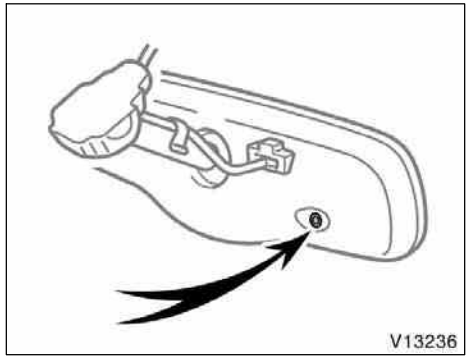

Type B

To ensure correct functioning of an anti–glare mirror sensor located on the back side of the mirror, do not touch or cover the sensor with your finger or a piece of cloth, etc.

Sun visors—

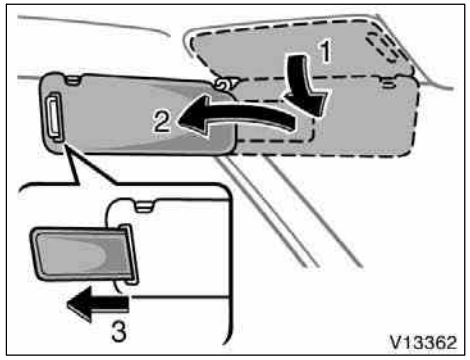

To block out glare, move the sun visor.

To block out glare from the front—Swing down the sun visor (position 1).

To block out glare from the side—Swing down the sun visor, remove it from the hook and swing it to the lateral side (position 2).

If glare comes from obliquely behind you, extend the plate at the end of the visor (position 3).

CAUTION

Do not extend the plate at the end of the sun visor when the visor is in the position 1. It can cover the anti–glare inside rear view mirror and obstruct the rear view.

—Vanity mirrors

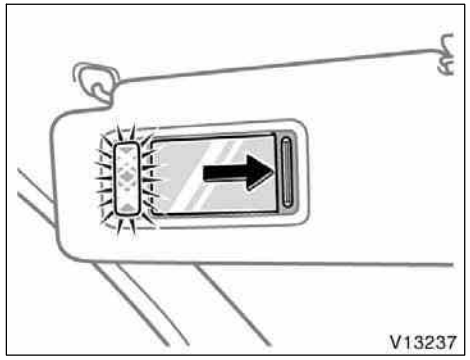

Type A

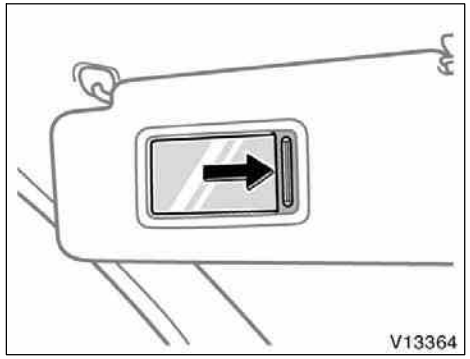

Type B

To use the vanity mirrors, swing down the main sun visor and slide the cover.

Type A only—The vanity light comes on when you slide the cover.

SECTION 1–5

OPERATION OF INSTRUMENTS AND CONTROLS

Lights, Wipers and Defogger

Headlights and turn signals 114
Emergency flashers 117
Instrument panel light control 117
Front fog lights 118
Interior lights 118
Personal lights 119
Ignition switch light 120
Windshield wipers and washer 121
Rear window wiper and washer 122
Rear window and outside rear view mirror defoggers and windshield wiper de–icer 122

Headlights and turn signals (with automatic light control system)

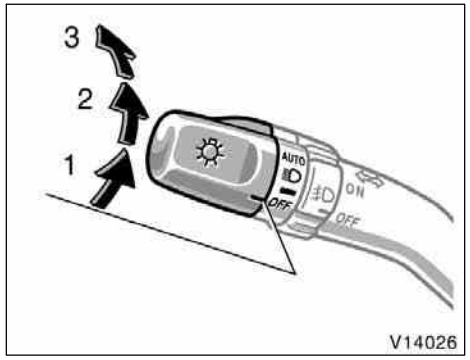

HEADLIGHTS

To turn on the following lights: Twist the headlight/turn signal lever knob.

Position 1—Parking, tail, license plate, side marker and instrument panel lights

Position 2—Headlights and all of the above

Position 3 (“AUTO”)—Headlights and/or all of the lights in position 1

They automatically turn on or off depending on the darkness of the surroundings.

Manually twist the knob to the position 2 to turn on the headlights if they are needed immediately when entering a dark tunnel, parking structure, etc.

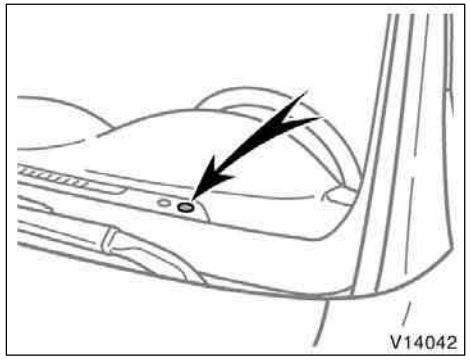

The automatic light control sensor is on the top of the driver’s side instrument panel.

Do not place anything on the instrument panel, and/or do not affix anything on the windshield to block this sensor.

The lights automatically turn off when the driver’s door is opened with the ignition key in the “ACC” or “LOCK” position. To turn them on again, turn the key to the “ON” position or actuate the headlight switch. If you are going to park for over one week, make sure the headlight switch is off.

NOTICE

To prevent the battery from being discharged, do not leave the lights on for a long period when the engine is not running.

Daytime running light system (on some models)

The headlights turn on at reduced intensity when the parking brake is released with the engine started, even with the light switch in the “OFF” position. They will not go off until the ignition switch is turned off.

To turn on the other exterior lights and instrument panel lights, twist the knob to the position 1.

Twist the knob to the position 2 to turn the headlights to full intensity for driving at night.

Headlights and turn signals (without automatic light control system)

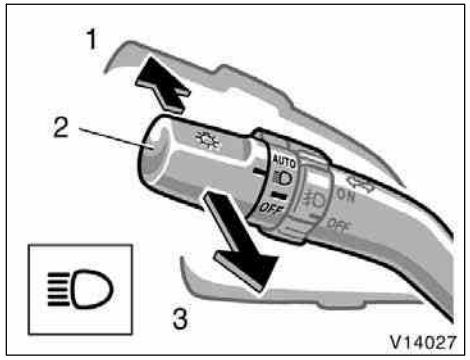

High–Low beams—For high beams, turn the headlights on and push the lever away from you (position 1). Pull the lever toward you (position 2) for low beams.

The headlight high beam indicator light (blue light) on the instrument panel will tell you that the high beams are on.

Flashing the high beam headlights (position 3)—Pull the lever all the way back. The high beam headlights turn off when you release the lever.

You can flash the high beam headlights with the knob turned to “OFF”.

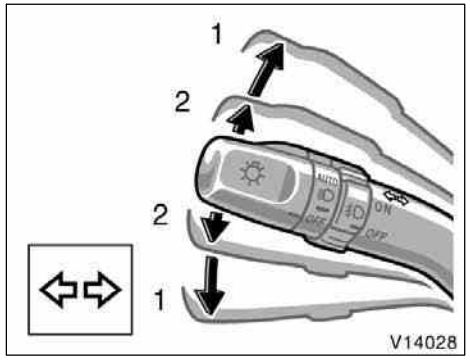

TURN SIGNALS

To signal a turn, push the headlight/turn signal lever up or down to position 1.

The key must be in the “ON” position.

The lever automatically returns after you make a turn, but you may have to return it by hand after you change lanes.

To signal a lane change, move the lever up or down to the pressure point (position 2) and hold it.

If the turn signal indicator lights (green lights) on the instrument panel flash faster than normal, a front or rear turn signal bulb is burned out. See “Replacing light bulbs” on page 392 in Section 7–3.

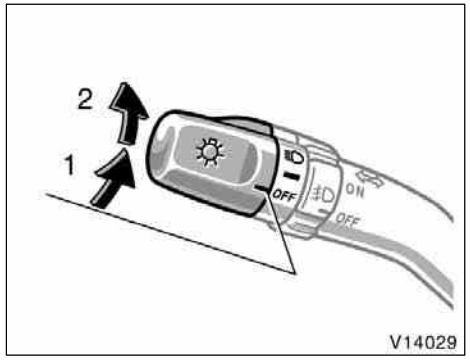

HEADLIGHTS

To turn on the following lights: Twist the headlight/turn signal lever knob.

Position 1—Parking, tail, license plate, side marker and instrument panel lights

Position 2—Headlights and all of the above

The lights automatically turn off when the driver’s door is opened with the ignition turned off. To turn them on again, turn the key to the “ON” position or actuate the headlight switch. If you are going to park for over one week, make sure the headlight switch is off.

NOTICE

To prevent the battery from being discharged, do not leave the lights on for a long period when the engine is not running.

Daytime running light system (on some models)

The headlights turn on at reduced intensity when the parking brake is released with the engine started, even with the light switch in the “OFF” position. They will not go off until the ignition switch is turned off.

To turn on the other exterior lights and instrument panel lights, twist the knob to the position 1.

Twist the knob to the position 2 to turn the headlights to full intensity for driving at night.

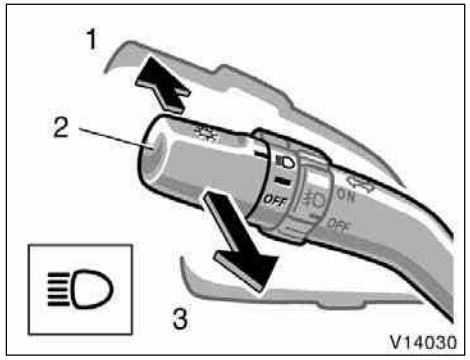

High–Low beams—For high beams, turn the headlights on and push the lever away from you (position 1). Pull the lever toward you (position 2) for low beams.

The headlight high beam indicator light (blue light) on the instrument panel will tell you that the high beams are on.

Flashing the high beam headlights (position 3)—Pull the lever all the way back. The high beam headlights turn off when you release the lever.

You can flash the high beam headlights with the knob turned to “OFF”.

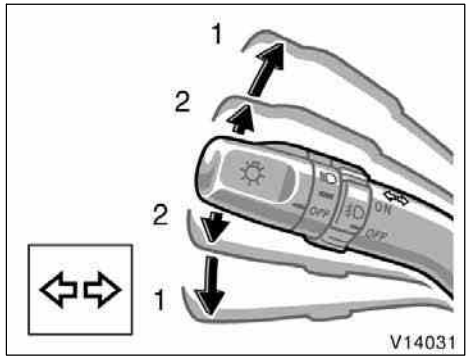

TURN SIGNALS

To signal a turn, push the headlight/turn signal lever up or down to position 1.

The key must be in the “ON” position.

The lever automatically returns after you make a turn, but you may have to return it by hand after you change lanes.

To signal a lane change, move the lever up or down to the pressure point (position 2) and hold it.

If the turn signal indicator lights (green lights) on the instrument panel flash faster than normal, a front or rear turn signal bulb is burned out. See “Replacing light bulbs” on page 392 in Section 7–3.

Emergency flashers

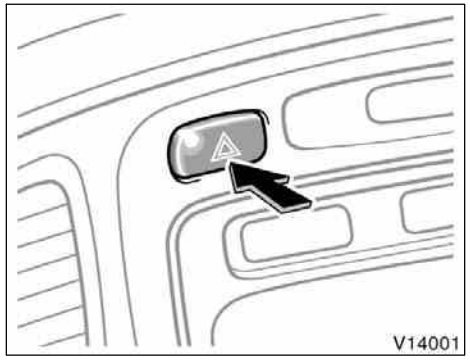

To turn on the emergency flashers, push the switch.

All the turn signal lights will flash. To turn them off, push the switch once again.

Turn on the emergency flashers to warn other drivers if your vehicle must be stopped where it might be a traffic hazard.

Always pull as far off the road as possible.

The turn signal light switch will not work when the emergency flashers are operating.

NOTICE

To prevent the battery from being discharged, do not leave the switch on longer than necessary when the engine is not running.

Instrument panel light control

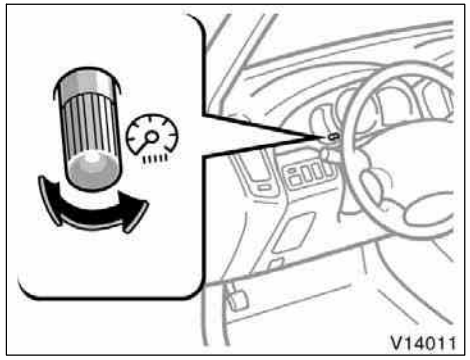

To adjust the brightness of the instrument panel lights, turn the knob.

Front fog lights

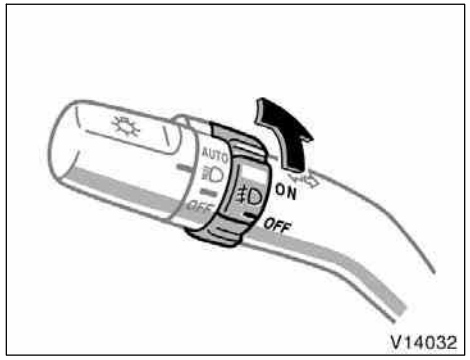

To turn on the front fog lights, twist the band of the headlight and turn signal switch lever. They will come on only when the headlights are on low beam.

Interior lights

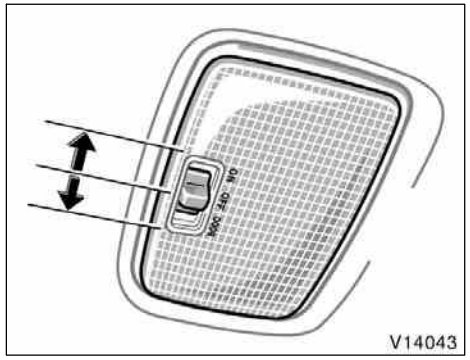

To turn on the interior light, slide the switch.

The interior light switch has the following positions:

“ON”—Keeps the light on all the time.

“OFF”—Turns the light off.

“DOOR”—

Center: Turns the light on when any of the side doors and back door are opened.

Rear: Turns the light on when the back door is opened.

ILLUMINATED ENTRY SYSTEM (center interior light)

When the switch is in the “DOOR” position and any of the side doors and back door is opened, the light will come on. After all the side doors and back door are closed, the light remains on for about 15 seconds before fading out.

However, in the following cases, the light fades out immediately:

- All the side doors and back door are closed when the ignition key is in “ACC” or “ON” position.
- The ignition key is turned to “ACC” or “ON” after all the side doors and back door are closed.
- All the side doors and back door are locked when the light is still on.

When all the side doors and back door are unlocked using either the key or the wireless remote control transmitter simultaneously, the light will come on and remain on for about 15 seconds before fading out.

The following adjustments can be made in this system. For details, contact your Toyota dealer.

- Cancelling the door key or wireless remote control transmitter linked operation
- Changing the timing for the light turning off

Personal lights

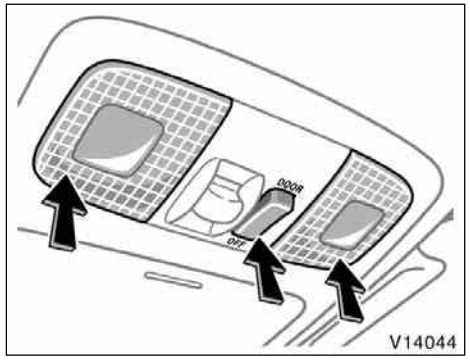

With moon roof

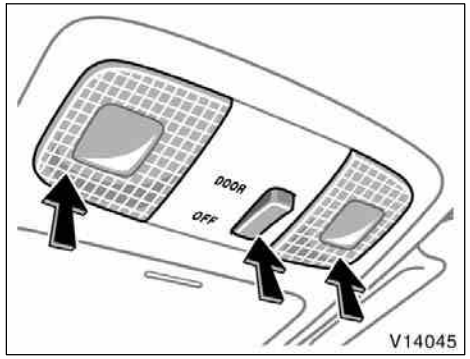

Without moon roof

The personal lights operate separately with each lens.

To turn on the light, push the lens on your side. To turn the light off, push the switch once again.

The center switch has the following positions:

“DOOR”—Turns the lights on when any of the side doors or back door is opened.

“OFF”—The lights are off.

ILLUMINATED ENTRY SYSTEM

When the switch is in the “DOOR” position and any of the side doors and back door is opened, the light will come on. After all the side doors and back door are closed, the light remains on for about 15 seconds before fading out.

However, in the following cases, the light fades out immediately:

- All the side doors and back door are closed when the ignition key is in “ACC” or “ON” position.
- The ignition key is turned to “ACC” or “ON” after all the side doors and back door are closed.
- All the side doors and back door are locked when the light is still on.

When all the side doors and back door are unlocked using either the key or the wireless remote control transmitter simultaneously, the light will come on and remain on for about 15 seconds before fading out.

The following adjustments can be made in this system. For details, contact your Toyota dealer.

- Cancelling the door key or wireless remote control transmitter linked operation
- Changing the timing for the light turning off

Ignition switch light

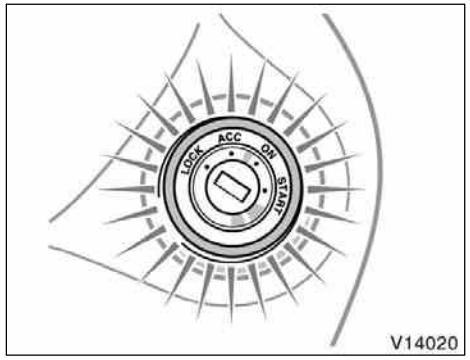

For easy access to the ignition switch, the ignition switch light comes on when any of the side doors are opened.

The light remains on for some time after all the side doors and back door are closed.

However, in the following cases, the lights go off immediately.

- All the side doors and back door are closed when the ignition key is in “ACC” or “ON” position.
- The ignition key is turned to “ACC” or “ON” after all the side doors and back door are closed.
- All the side doors and back door are closed and locked when the light is still on.

When all the side doors and back door are unlocked using either the key or the wireless remote control transmitter simultaneously, the light will come on and remain on for about 15 seconds before fading out.

The following adjustments can be made in this system. For details, contact your Toyota dealer.

- Cancelling the door key or wireless remote control transmitter linked operation
- Changing the timing for the light turning off

Windshield wipers and washer

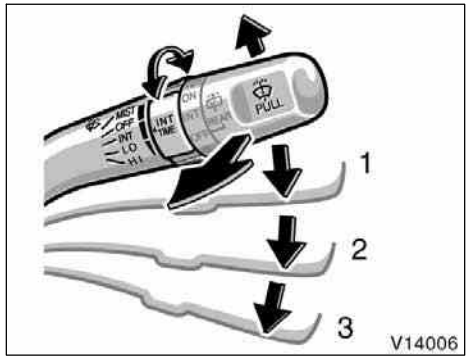

To turn on the windshield wipers, move the lever to the desired setting.

The key must be in the “ON” position.

Lever position	Speed setting
Position 1	Intermittent
Position 2	Slow
Position 3	Fast

For a single sweep of the windshield, push the lever up and release it.

The “INT TIME” band lets you adjust the wiping time interval when the wiper lever is in the intermittent position (position 1). Twist the band upward to increase the time between sweeps, and downward to decrease it.

To squirt washer fluid, pull the lever toward you.

If the windshield wipers are off, they will operate a couple of times after the washer squirts.

For instructions on adding washer fluid, see “Adding washer fluid” on page 391 in Section 7–3.

In freezing weather, warm the windshield with the defroster before using the washer. This will help prevent the washer fluid from freezing on your windshield, which can block your vision.

NOTICE

Do not operate the wipers if the windshield is dry. It may scratch the glass.

When waxing your vehicle, make sure that the washer nozzles do not become blocked. If a nozzle becomes blocked, contact your Toyota dealer to have the vehicle serviced.

NOTICE

If a nozzle becomes blocked, do not try to clear it with a pin or other object. The nozzle will be damaged.

Rear window wiper and washer

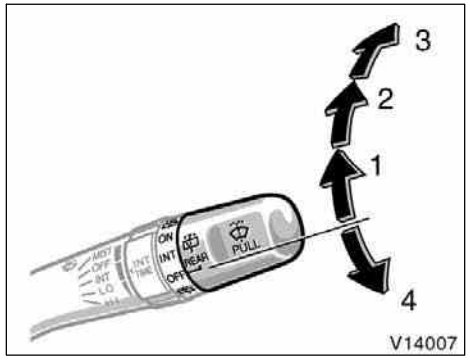

To turn on the rear window wiper, twist the lever knob upward.

The key must be in the “ON” position.

Lever position	Speed setting
Position 1	Intermittent
Position 2	Normal

To squirt washer fluid on the rear window, twist the knob upward or downward as far as it will go (position 3 or 4). The knob automatically returns from these positions after you release it.

For instructions on adding washer fluid, see “Adding washer fluid” on page 391 in Section 7–3.

NOTICE

Do not operate the rear wiper if the rear window is dry. It may scratch the glass.

Rear window and outside rear view mirror defoggers and windshield wiper de–icer

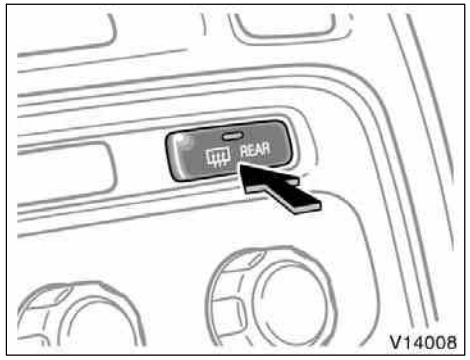

Without navigation system (type A)

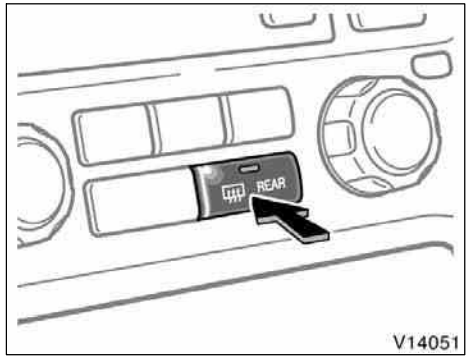

Without navigation system (type B)

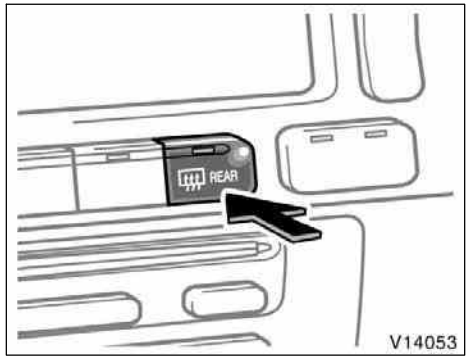

With navigation system

To defog or defrost the rear window, push the switch.

The key must be in the “ON” position.

The thin heater wires on the inside of the rear window will quickly clear the window surface. An indicator light will illuminate to indicate the defogger is operating.

On some models, the outside rear view mirror defoggers and/or the windshield wiper de–icer is also operating simultaneously by this switch. Vehicles with the outside rear view mirror defoggers, the heater panel in the outside rear view mirrors will quickly clear the surfaces. Vehicles with the windshield wiper de–icer, the windshield wiper blades will be de–iced.

Push the switch once again to turn the defoggers off.

The system will automatically shut off after the defogger has operated about 15 minutes.

⚠ CAUTION

Vehicles with outside rear view mirror defoggers, since the mirror surfaces can get hot, do not touch them when the defogger switch is on.

Make sure you turn the defoggers off when the surfaces are clear or the wiper blades have de–iced. Leaving the defoggers on for a long time could cause the battery to discharge, especially during stop–and–go driving. The defoggers are not designed for drying rain water or for melting snow.

If the outside rear view mirrors are heavily coated with ice, use a spray de–icer before operating the switch.

NOTICE

When cleaning the inside of the rear window, be careful not to scratch or damage the heater wires or connectors.

SECTION 1 – 6

OPERATION OF INSTRUMENTS AND CONTROLS

Gauges, Meters and Service reminder indicators

Fuel gauge 126
Engine coolant temperature gauge 126
Tachometer 127
Odometer and two trip meters 127
Service reminder indicators and warning buzzers 129

Fuel gauge

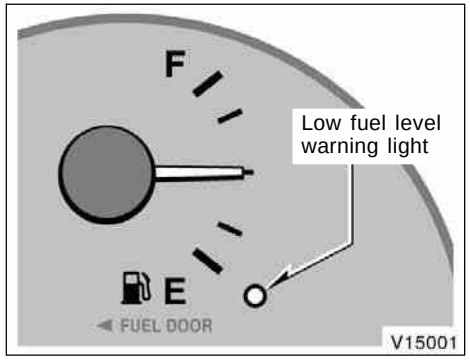

The gauge indicates the approximate quantity of the fuel remaining in the tank when the ignition switch is on.

Nearly full—Needle at “F”
Nearly empty—Needle at “E”

It is a good idea to keep the tank over 1/4 full.

The needle moves when braking, accelerating or making turns. This is caused by the movement of the fuel in the tank.

If the fuel level approaches “E” or the low fuel level warning light comes on, fill the fuel tank as soon as possible.

On inclines or curves, due to the movement of fuel in the tank, the fuel gauge needle may fluctuate or the low fuel level warning light may come on earlier than usual.

If the fuel tank is completely empty, the malfunction indicator lamp comes on. Fill the fuel tank immediately.

The indicator lamp goes off after driving several times. If the indicator lamp does not go off, contact your Toyota dealer as soon as possible.

Engine coolant temperature gauge

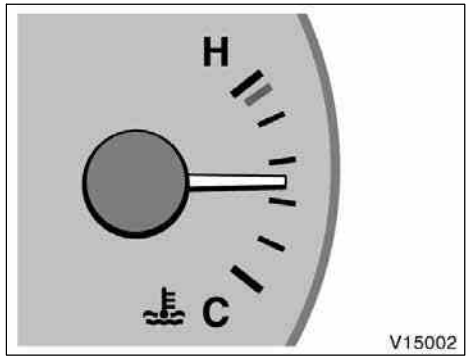

The gauge indicates the engine coolant temperature when the ignition switch is on. The engine operating temperature will vary with changes in weather and engine load.

If the needle moves into the red zone, your engine is too hot. If your vehicle overheats, stop your vehicle and allow the engine to cool.

Your vehicle may overheat during severe operating conditions, such as:

- Driving up a long hill on a hot day.
- Reducing speed or stopping after high speed driving.
- Idling for a long period with the air conditioning on in stop–and–go traffic.

- Towing a trailer.

NOTICE

- ***Do not remove the thermostat in the engine cooling system as this may cause the engine to overheat. The thermostat is designed to control the flow of coolant to keep the temperature of the engine within the specified operating range.***
- ***Do not continue driving with an overheated engine. See “If your vehicle overheats” on page 328 in Section 4.***

Tachometer

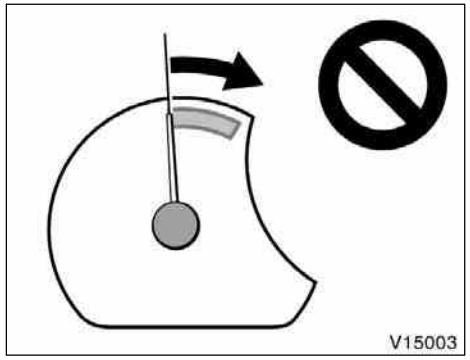

The tachometer indicates engine speed in thousands of rpm (revolutions per minute). Use it while driving to select correct shift points and to prevent engine lugging and over–revving.

Driving with the engine running too fast causes excessive engine wear and poor fuel economy. Remember, in most cases the slower the engine speed, the greater the fuel economy.

NOTICE

Do not let the indicator needle get into the red zone. This may cause severe engine damage.

Odometer and two trip meters

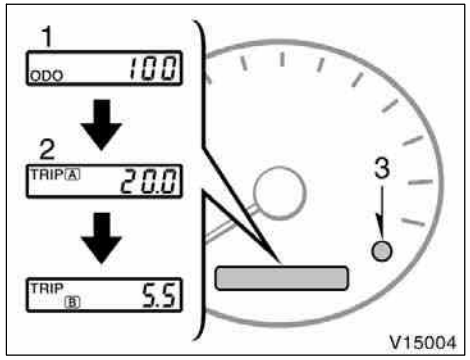

This meter displays the odometer and two trip meters.

1. Odometer—Shows the total distance the vehicle has been driven.
2. Two trip meters—Show two different distances independently driven since the last time each trip meter was set to zero.

   You can use one trip meter to calculate the fuel economy and the other to measure the distance on each trip. All trip meter data is cancelled if the electrical power source is disconnected.

3. Trip meter reset knob—Resets the two trip meters to zero, and also change the meter display.

   To change the meter display, quickly push and release the knob. The meter display changes in the order from the odometer to trip meter A to trip meter B, then back to the odometer each time you push.

   To reset the trip meter A to zero, display the meter A reading, then push and hold the knob until the meter is set to zero. The same process can be applied for resetting the trip meter B.

Service reminder indicators and warning buzzers

If the indicator or buzzer comes on...		Do this.
(a)	**BRAKE** or (indicator and buzzer)	If parking brake is off, stop immediately and contact Toyota dealer.
(b)	(indicator and buzzer)	Fasten driver’s seat belt.
(c)	PASSENGER	Fasten front passenger’s seat belt.
(d)		Stop and check.
(e)		Stop and check.
(f)	CHECK or	Take vehicle to Toyota dealer.
(g)	Low fuel level warning light	Fill up tank.

If the indicator or buzzer comes on...		Do this.
(h)	ABS or	Take vehicle to Toyota dealer. If brake system warning light is also on, stop immediately and contact Toyota dealer.
(i)	(indicator and buzzer)	Close all side doors and back door.
(j)	A/T OIL TEMP	Stop and check.
(k)		Take vehicle to Toyota dealer immediately.
(l)	VSC	Take vehicle to Toyota dealer.
(m)		Adjust tire inflation pressure. If light remains, contact Toyota dealer.
(n)		Add washer fluid.

If the indicator or buzzer comes on...		Do this.
(o)	MAINT REQD	Replace engine oil.
(p)	Key reminder buzzer	Remove key.

(a) Brake System Warning Light and Buzzer

This light comes on in the following cases when the ignition key is in the “ON” position.

- **When the parking brake is applied...**

This light comes on for a few seconds when the ignition key is turned to the “ON” position even after the parking brake is released.

If the vehicles speed rises above 5 km/h (3 mph) with the parking brake applied, a buzzer sounds.

- **When the brake fluid level is low...**

CAUTION

It is dangerous to continue driving normally when the brake fluid level is low.

Have your vehicle checked at your Toyota dealer in the following cases:

- The light does not come on even if the parking brake is applied when the ignition key is in the “ON” position.
- The light does not come on even if the ignition key is turned on with the parking brake released.

A warning light turning on briefly during operation does not indicate a problem.

CAUTION

If either of the following conditions occurs, immediately stop your vehicle at a safe place and contact your Toyota dealer.

- **The light does not turn off even after the parking brake is released while the engine is running.**

  In this case, the brakes may not work properly and your stopping distance will become longer. Depress the brake pedal firmly and bring the vehicle to an immediate stop.
- **The brake system warning light remains on together with the “ABS” warning light.**

  In this case, not only the anti–lock brake system will fail but also the vehicle will become extremely unstable during braking.

(b) Driver’s Seat Belt Reminder Light and Buzzer

This light and buzzer remind you to buckle up the driver’s seat belt.

Once the ignition key is turned to “ON”, the reminder light flashes and buzzer sounds if the driver’s seat belt is not fastened. Unless the driver fastens the belt, the light keeps flashing and the buzzer stops after about 4 to 8 seconds.

(c) Front Passenger’s Seat Belt Reminder Light

This light reminds you to buckle up the front passenger’s seat belt.

Once the ignition key is turned to “ON”, the reminder light flashes if a passenger sits in the front passenger seat and does not fasten the seat belt.

If luggage or other load is placed on the front passenger seat, depending on its weight, the reminder light may come on.

(d) Discharge Warning Light

This light warns that the battery is being discharged.

If it comes on while you are driving, there is a problem somewhere in the charging system.

The engine ignition will continue to operate, however, until the battery is discharged. Turn off the air conditioning, blower, radio, etc., and drive directly to the nearest Toyota dealer or repair shop.

NOTICE

Do not continue driving if the engine drive belt is broken or loose.

(e) Low Engine Oil Pressure Warning Light

This light warns that the engine oil pressure is too low.

If it flickers or stays on while you are driving, pull off the road to a safe place and stop the engine immediately. Call a Toyota dealer or qualified repair shop for assistance.

The light may occasionally flicker when the engine is idling or it may come on briefly after a hard stop. There is no cause for concern if it then goes out when the engine is accelerated slightly.

The light may come on when the oil level is extremely low. It is not designed to indicate low oil level, and the oil level must be checked using the level dipstick.

NOTICE

Do not drive the vehicle with the warning light on—even for one block. It may ruin the engine.

(f) Malfunction Indicator Lamp

This lamp comes on when the ignition key is turned to the “ON” position and goes off after the engine starts. This means that the warning light system is operating properly.

If the lamp remains on, or the lamp comes on while driving, first check the followings.

- Empty fuel tank

  If the fuel tank is empty, refuel immediately.

- Loose fuel tank cap

  If the fuel tank cap is loose, securely tighten it.

These cases are temporary malfunctions. The malfunction indicator lamp will go off after taking several driving trips.

If the lamp will not go off even after the several trips, contact your Toyota dealer as soon as possible.

If the fuel tank is not empty or the fuel tank cap is not loose...

- There is a problem somewhere in the engine, emission control system, electronic throttle control system, automatic transmission electrical system or warning light system itself.

In this case, slow down and have your vehicle checked/repaired by your Toyota dealer as soon as possible.

If the engine speed does not increase with the accelerator pedal depressed down, there may be a problem somewhere in your electronic throttle control system.

At this time, vibration may occur. However, if you depress the accelerator pedal more firmly and slowly, you can drive your vehicle at low speeds. Have your vehicle checked by your Toyota dealer as soon as possible.

Even if the abnormality of the electronic throttle control system is corrected during low speed driving, the system may not be recovered until the engine is stopped and the ignition key is turned to “ACC” or “LOCK” position.

CAUTION

Be especially careful to prevent erroneous pedal operation.

Emissions Inspection and Maintenance (I/M) programs

Your vehicle may not pass a state emission inspection if the malfunction indicator lamp remains on. Contact your Toyota dealer to check your vehicle’s emission control system and OBD (On–Board Diagnostics) system before taking your vehicle for the inspection.

For details, see “Emissions Inspection and Maintenance (I/M) programs” on page 362 in Section 6.

(g) Low Fuel Level Warning Light

This light comes on when the fuel level in the tank becomes nearly empty. Fill up the tank as soon as possible.

On inclines or curves, due to the movement of fuel in the tank, the low fuel level warning light may come on earlier than usual.

(h) “ABS” Warning Light

The light comes on when the ignition key is turned to the “ON” position. If the anti–lock brake system and the brake assist system work properly, the light turns off after a few seconds. Thereafter, if the system malfunctions, the light comes on again.

When the “ABS” warning light is on (and the brake system warning light is off), the anti–lock brake system, the brake assist system, the traction control system and the vehicle stability control system do not operate, but the brake system still operates conventionally.

When the “ABS” warning light is on (and the brake system warning light is off), the anti–lock brake system does not operate so that the wheels could lock up during a sudden braking or braking on slippery road surfaces.

If either of the following conditions occurs, this indicates a malfunction somewhere in the components monitored by the warning light system. Contact your Toyota dealer as soon as possible to service the vehicle.

- The light does not come on when the ignition key is turned to the “ON” position, or remains on.
- The light comes on while you are driving.

A warning light turning on briefly during operation does not indicate a problem.

CAUTION

If the “ABS” warning light remains on together with the brake system warning light, immediately stop your vehicle at a safe place and contact your Toyota dealer.

In this case, not only the anti–lock brake system will fail but also the vehicle will become extremely unstable during braking.

(i) Open Door Warning Light and Buzzer

This light remains on until all the side doors and back door are completely closed.

If the vehicle speed rises above 5 km/h (3 mph) with any door open, a buzzer sounds.

(j) Automatic Transmission Fluid Temperature Warning Light

This light warns that the automatic transmission fluid temperature is too high.

If this light comes on while you are driving, slow down and pull off the road. Stop the vehicle at a safe place and put the selector lever in “P”. With the engine idling, wait until the light goes off. If the light goes off, you can start the vehicle again. If the light does not go off, call a Toyota dealer or qualified repair shop for assistance.

NOTICE
Continued driving with the warning light on may damage the automatic transmission.

(k) SRS Warning Light

This light will come on when the ignition key is turned to the “ON” position. After about 6 seconds, the light will go off. This means the systems of the airbag and front seat belt pretensioners are operating properly.

This warning light system monitors the airbag sensor assembly, front airbag sensors, side and curtain shield airbag sensors, curtain shield airbag sensors, driver’s seat position sensor, driver’s seat belt buckle switch, front passenger occupant classification system, “AIRBAG ON” indicator light, “AIRBAG OFF” indicator light, front passenger’s seat belt buckle switch, seat belt pretensioner assemblies, inflators, warning light, interconnecting wiring and power sources.

If either of the following conditions occurs, this indicates a malfunction somewhere in the parts monitored by the warning light system. Contact your Toyota dealer as soon as possible to service the vehicle.

- The light does not come on when the ignition key is turned to the “ON” position, remains on for more than 6 seconds or flashes.
- The light comes on or flashes while driving.

If the light stays on, it indicates that the SRS driver and front passenger airbag system and/or front passenger occupant classification system and “AIRBAG ON” and “AIRBAG OFF” indicator lights have a problem. If the light flashes, the SRS side airbag system and/or curtain shield airbag system have a problem.

(l) “VSC” Warning Light

This light warns that there is a problem somewhere in the vehicle stability control system or traction control system.

The light will come on when the ignition key is turned to “ON”, and will go off after a few seconds.

If the light comes on while driving, the system does not work. However, as conventional braking operates when applied, there is no problem to continue your driving.

In the following cases, contact your Toyota dealer:

- The warning light does not come on after the ignition key is turned to “ON”.
- The warning light remains on after the ignition key is turned to “ON”.
- The warning light comes on while driving.

Two–wheel drive models only—The “TRAC OFF” indicator light will come on when the “VSC” warning light comes on even if the “TRAC OFF” switch is not pushed.

(m) Low Tire Pressure Warning Light

This light warns that the tire inflation pressure is critically low. The light comes on when the ignition key is turned to the “ON” position. It goes off after a few seconds. This indicates that the low tire pressure warning system is functioning properly.

If the light comes on while driving, adjust tire inflation pressure to the specified level. (See “Tires” on page 402 in Section 8.) After the tire inflation pressure is adjusted, push the tire pressure warning system reset switch for a few seconds and make sure the warning light goes off. If the light still remains or blinks slowly (every 0.5 seconds), have the low tire pressure warning system checked at your Toyota dealer.

If the light blinks rapidly (every 0.25 seconds), the low tire pressure warning system needs to be initialized.

For details, see “Tire pressure warning system” on page 155 in Section 1–7.

(n) Low Windshield Washer Fluid Level Warning Light

The light warns that the windshield washer fluid level is too low. Add washer fluid at your earliest opportunity. (For instructions, see “Adding washer fluid” on page 391 in Section 7–3.)

(o) Engine Oil Replacement Reminder Light (for vehicles sold in U.S.A.)

This light reminds you when to replace the engine oil.

This light will come on when the ignition key is turned to “ON” and will go off after about a few seconds.

When you drive for about 7200 km (4500 miles) after the engine oil replacement, this light illuminates for about 3 seconds and then flashes for about 12 seconds with the ignition key turned to the “ON” position. If you continue driving without replacing the engine oil, and if the distance driven exceeds 8000 km (5000 miles), the light will come on after the ignition key is turned to “ON” position. The light will remain on thereafter.

If the light is flashing, we recommend that you replace the engine oil at an early opportunity depending on the driving and road conditions. If the light comes on, replace it as soon as possible.

The system must be reset after the engine oil replacement. Reset the system by the following procedure:

1. Turn the ignition key to the “OFF” position with the odometer reading shown. (For details, see “Odometer and two trip meters” on page 127 in this Section.)
2. Turn the ignition key to the “ON” position while holding down the trip meter reset knob.

Hold down the knob for at least 5 seconds. The odometer indicates “000000” and the light goes off.

If the system fails to reset, the light will continue flashing.

(p) Key Reminder Buzzer

This buzzer reminds you to remove the key when you open the driver’s door with the ignition key in the “ACC” or “LOCK” position.

CHECKING SERVICE REMINDER INDICATORS (except the low fuel level warning light and low windshield washer fluid level warning light)

1. Apply the parking brake.
2. Open one of the side doors or back door.
   The open door warning light should come on.
3. Close the door.
   The open door warning light should go off.
4. Turn the ignition key to “ON”, but do not start the engine.
   All the service reminder indicators except the open door warning light should come on. The “ABS” and “VSC” warning lights, low tire pressure warning light and engine oil replacement reminder light go off after a few seconds. The SRS warning light goes off after about 6 seconds. (The “TRAC OFF” indicator light and slip indicator light also come on and go off after a few seconds.)

If any service reminder indicator or warning buzzer does not function as described above, have it checked by your Toyota dealer as soon as possible.

SECTION 1–7

OPERATION OF INSTRUMENTS AND CONTROLS

Ignition switch, Transmission and Parking brake

Ignition switch with steering lock 140
Automatic transmission 141
Traction control system 150
Vehicle stability control system 154
Tire pressure warning system 155
Parking brake 159
Cruise control 159

Ignition switch with steering lock

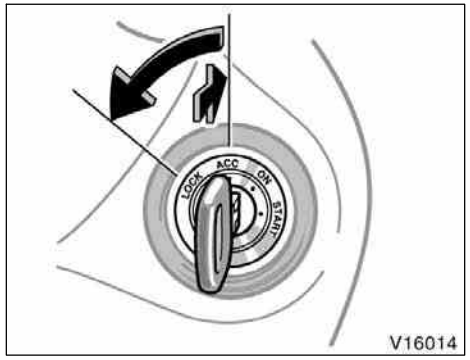

“START”—Starter motor on. The key will return to the “ON” position when released.

For starting tips, see page 309 in Section 3.

“ON”—Engine on and all accessories on.

This is the normal driving position.

“ACC”—Accessories such as the radio operate, but the engine is off.

If you leave the key in the “ACC” or “LOCK” position and open the driver’s door, a buzzer will remind you to remove the key.

“LOCK”—Engine is off and the steering wheel is locked. The key can be removed only at this position.

You must push in the key to turn it from “ACC” to the “LOCK” position. The selector lever must be in the “P” position before pushing the key.

Vehicles with engine immobilizer system—Once you remove the key, the engine immobilizer system is automatically set. (See “Engine immobilizer system” on page 15 in Section 1–2.)

When starting the engine, the key may seem stuck at the “LOCK” position. To free it, first be sure the key is pushed all the way in, and then rock the steering wheel slightly while turning the key gently.

2AZ–FE engine only—Approximately five hours after the engine is turned off, you may hear sound coming from underneath the luggage compartment for several minutes. This is normal operation and does not indicate a malfunction. (See “Leak detection pump” on page viii.)

NOTICE

Do not leave the key in the “ON” position if the engine is not running. The battery will discharge and the ignition could be damaged.

Automatic transmission

▶2AZ–FE engine

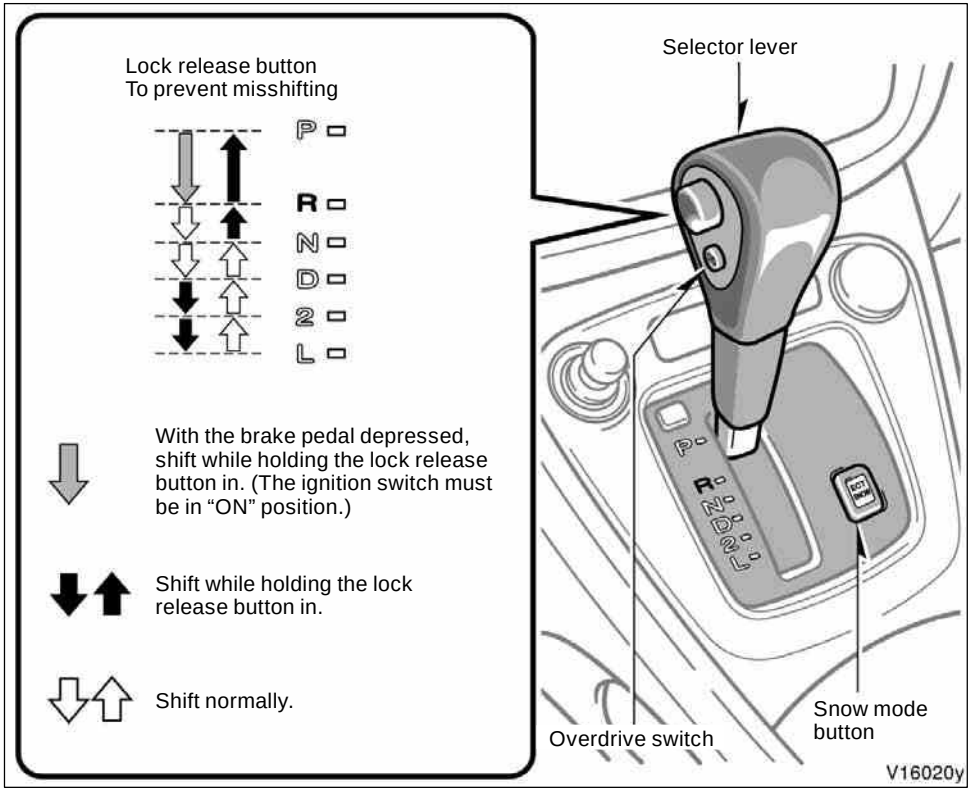

Your automatic transmission has a shift lock system to minimize the possibility of incorrect operation. This means you can only shift out of “P” position when the brake pedal is depressed (with the ignition switch in “ON” position and the lock release button depressed).

(a) Selector lever

The shift position is also displayed on the instrument cluster.

P: Parking, engine starting and key removal

R: Reverse

N: Neutral

D: Normal driving (with overdrive on)

2: Stronger engine braking

L: Maximum engine braking

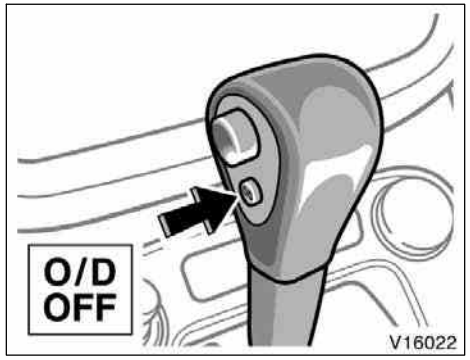

(b) Overdrive switch

You can select either third gear (with overdrive off) or fourth gear (with overdrive on) by pushing this switch.

To turn the overdrive off, push the switch. The “O/D OFF” indicator light should come on. To turn the overdrive on again, push the switch again. The “O/D OFF” indicator light should go off.

Always drive your vehicle with the overdrive on for better fuel economy and quieter driving.

If the engine is turned off when the overdrive is off and restarted, the overdrive will be on automatically.

When the cruise control is being used, even if you downshift the transmission by pushing and releasing the overdrive switch, engine braking will not be enabled because the cruise control is not cancelled.

For ways to decrease the vehicle speed, see “Cruise control” on page 159 in this Section.

(c) Normal driving

1. Start the engine as instructed in “How to start the engine” on page 310 in Section 3. The transmission must be in “P” or “N”.
2. With your foot holding down the brake pedal, shift the selector lever to “D”.

When the lever is in the “D” position, the automatic transmission system will select the most suitable gear for running conditions such as normal cruising, hill climbing, hard towing, etc.

Always turn the overdrive on for better fuel economy and quieter driving. If the engine coolant temperature is low, the transmission will not shift into the overdrive gear even with the overdrive on.

⚠ CAUTION

Never put your foot on the accelerator pedal while shifting.

3. Release the parking brake and brake pedal. Depress the accelerator pedal slowly for smooth starting.

(d) Using engine braking

To use engine braking, you can downshift the transmission as follows:

- Push the overdrive switch. The “O/D OFF” indicator light will come on and the transmission will downshift to third gear.
- Shift into the “2” position. The transmission will downshift to second gear when the vehicle speed drops down to or lower than the following speed, and stronger engine braking will be enabled.

  Two–wheel drive models
  ..... 103 km/h (63 mph)
  Four–wheel drive models
  ..... 93 km/h (57 mph)

- Shift into the “L” position. The transmission will downshift to first gear when the vehicle speed drops down to or lower than the following speed, and maximum engine braking will be enabled.

  Two–wheel drive models
  . . . . . 45 km/h (28 mph)
  Four–wheel drive models
  . . . . . 46 km/h (28 mph)

When the cruise control is being used, even if you downshift the transmission by pushing and releasing the overdrive switch, engine braking is not enabled because the cruise control is not cancelled.

For ways to decrease the vehicle speed, see “Cruise control” on page 159 in this Section.

⚠ CAUTION

Be careful when downshifting on a slippery surface. Abrupt shifting could cause the vehicle to spin or skid.

(e) Using “2” and “L” positions

The “2” and “L” positions are used for strong engine braking as described previously.

With the selector lever in “2” or “L”, you can start the vehicle in motion as with the lever in “D”.

With the selector lever in “2”, the vehicle will start in first gear and automatically shift to second gear.

With the selector lever in “L”, the transmission is engaged in first gear.

NOTICE

◆***Be careful not to over–rev the engine. Watch the tachometer to keep engine rpm from going into the red zone. The approximate maximum allowable speed for each position is given below for your reference:***

Two–wheel drive models
“2” . . . . . 123 km/h (76 mph)
“L” . . . . . 69 km/h (43 mph)

Four–wheel drive models
“2” . . . . . 111 km/h (69 mph)
“L” . . . . . 62 km/h (38 mph)

◆***Do not continue hill climbing or hard towing for a long time in the “2” or “L” position. This may cause severe automatic transmission damage from overheating. To prevent such damage, “D” position should be used in hill climbing or hard towing.***

(f) Backing up

1. Bring the vehicle to a complete stop.
2. With the brake pedal held down with your foot, shift the selector lever to the “R” position.

NOTICE

Never shift into reverse while the vehicle is moving.

(g) Parking

1. Bring the vehicle to a complete stop.
2. With the brake pedal pressed down, fully depress the parking brake pedal to apply the parking brake securely.
3. With the brake pedal pressed down, shift the selector lever to the “P” position.

⚠ CAUTION

Never attempt to move the selector lever into “P” position under any circumstances while the vehicle is moving. Serious mechanical damage and loss of vehicle control may result.

(h) Good driving practice

- If the transmission repeatedly shifts up and down between third gear and overdrive when climbing a gentle slope, the overdrive switch should be turned off. Be sure to turn the switch on immediately afterward.
- When towing a trailer, in order to maintain engine braking efficiency, do not use overdrive.

⚠ CAUTION

Always keep your foot on the brake pedal while stopped with the engine running. This prevents the vehicle from creeping.

NOTICE

Always use the brake pedal or the parking brake to hold the vehicle on an upgrade. Do not attempt to hold the vehicle using the accelerator pedal, as this can cause the transmission to overheat.

(i) Driving in snow mode

Use this mode when starting your vehicle in ice or snow.

To set the driving pattern to the snow mode, push the switch. The “ECT SNOW” indicator on the instrument cluster is on. To cancel the snow mode, push the switch again.

If the engine is turned off with the snow mode is on, the snow mode is cancelled when the engine is restarted.

(j) If you cannot shift the selector lever out of “P” position

If you cannot shift the selector lever from the “P” position even though the brake pedal is depressed, use the shift lock override button. For instructions, see “If you cannot shift automatic transmission selector lever” on page 346 in Section 4.

▶3MZ–FE engine

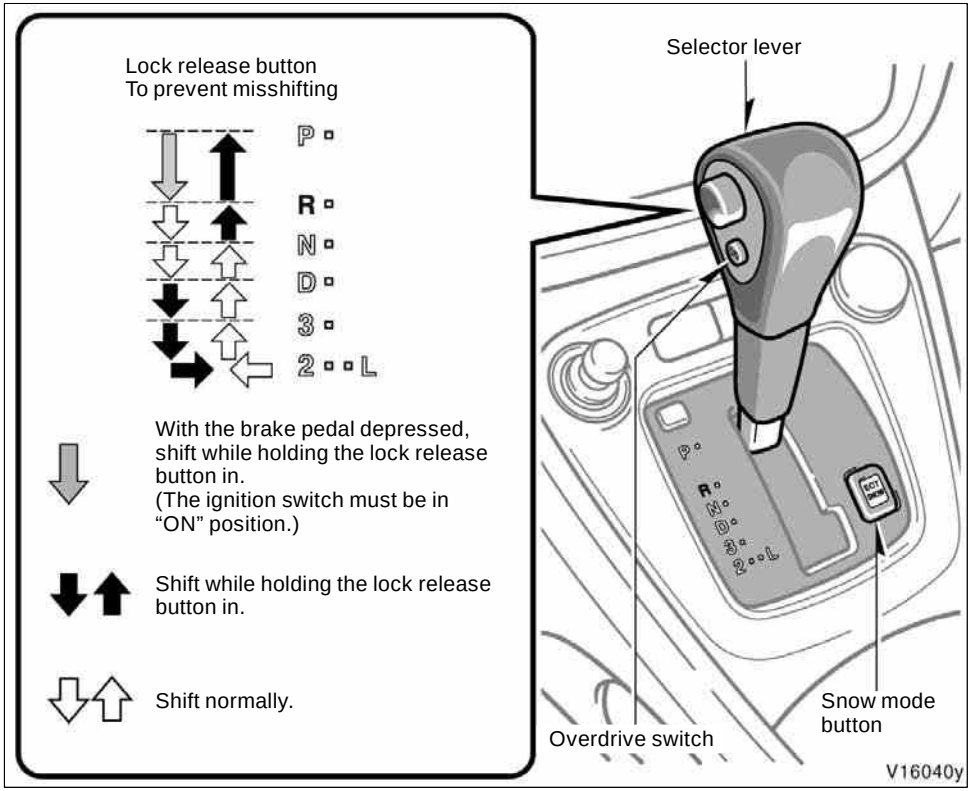

Your automatic transmission has a shift lock system to minimize the possibility of incorrect operation. This means you can only shift out of “P” position when the brake pedal is depressed (with the ignition switch in “ON” position and the lock release button depressed).

(a) Selector lever

The shift position is also displayed on the instrument cluster.

P: Parking, engine starting and key removal

R: Reverse

N: Neutral

D: Normal driving (with overdrive on)

3, 2: Stronger engine braking

L: Maximum engine braking

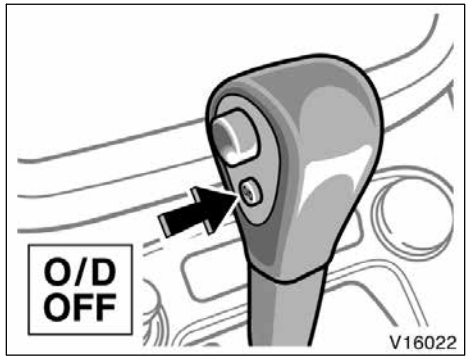

(b) Overdrive switch

You can select either fourth gear (with overdrive off) or fifth gear (with overdrive on) by pushing this switch.

To turn the overdrive off, push the switch. The “O/D OFF” indicator light should come on. To turn the overdrive on again, push the switch again. The “O/D OFF” indicator light should go off.

Always drive your vehicle with the overdrive on for better fuel economy and quieter driving.

If the engine is turned off when the overdrive is off and restarted, the overdrive will be on automatically.

When the cruise control is being used, even if you downshift the transmission by pushing and releasing the overdrive switch, engine braking will not be enabled because the cruise control is not cancelled.

For ways to decrease the vehicle speed, see “Cruise control” on page 159 in this Section.

(c) Normal driving

1. Start the engine as instructed in “How to start the engine” on page 310 in Section 3. The transmission must be in “P” or “N”.
2. With your foot holding down the brake pedal, shift the selector lever to “D”.

When the lever is in the “D” position, the automatic transmission system will select the most suitable gear for running conditions such as normal cruising, hill climbing, hard towing, etc.

Always turn the overdrive on for better fuel economy and quieter driving. If the engine coolant temperature is low, the transmission will not shift into the overdrive gear even with the overdrive on.

⚠ CAUTION

Never put your foot on the accelerator pedal while shifting.

3. Release the parking brake and brake pedal. Depress the accelerator pedal slowly for smooth starting.

(d) Using engine braking

To use engine braking, you can downshift the transmission as follows:

- Push the overdrive switch. The “O/D OFF” indicator light will come on and the transmission will downshift to fourth gear.
- Shift into the “3” position. The transmission will downshift to third gear when the vehicle speed drops down to or lower than 132 km/h (81 mph), and stronger engine braking will be enabled.
- Shift into the “2” position. The transmission will downshift to second gear when the vehicle speed drops down to or lower than 85 km/h (53 mph), and stronger engine braking will be enabled.

- Shift into the “L” position. The transmission will downshift to first gear when the vehicle speed drops down to or lower than 40 km/h (25 mph), and maximum engine braking will be enabled.

When the cruise control is being used, even if you downshift the transmission by pushing and releasing the overdrive switch, engine braking is not enabled because the cruise control is not cancelled.

For ways to decrease the vehicle speed, see “Cruise control” on page 159 in this Section.

CAUTION

Be careful when downshifting on a slippery surface. Abrupt shifting could cause the vehicle to spin or skid.

(e) Using “3”, “2” and “L” positions

The “3”, “2” and “L” positions are used for strong engine braking as described previously.

With the selector lever in “3”, “2” or “L”, you can start the vehicle in motion as with the lever in “D”.

With the selector lever in “3” or “2”, the vehicle will start in first gear and automatically shift to third gear or second gear.

With the selector lever in “L”, the transmission is engaged in first gear.

NOTICE

- ***Be careful not to over–rev the engine. Watch the tachometer to keep engine rpm from going into the red zone. The approximate maximum allowable speed for each position is given below for your reference:***

  “3” . . . . . 144 km/h (90 mph)
  “2” . . . . . 92 km/h (58 mph)
  “L” . . . . . 51 km/h (32 mph)

- ***Do not continue hill climbing or hard towing for a long time in the “3”, “2” or “L” position. This may cause severe automatic transmission damage from overheating. To prevent such damage, “D” position should be used in hill climbing or hard towing.***

(f) Backing up

1. Bring the vehicle to a complete stop.
2. With the brake pedal held down with your foot, shift the selector lever to the “R” position.

NOTICE

Never shift into reverse while the vehicle is moving.

(g) Parking

1. Bring the vehicle to a complete stop.
2. With the brake pedal pressed down, fully depress the parking brake pedal to apply the parking brake securely.
3. With the brake pedal pressed down, shift the selector lever to the “P” position.

CAUTION

Never attempt to move the selector lever into “P” position under any circumstances while the vehicle is moving. Serious mechanical damage and loss of vehicle control may result.

(h) Good driving practice

- If the transmission repeatedly shifts up and down between fourth gear and overdrive when climbing a gentle slope, the overdrive switch should be turned off. Be sure to turn the switch on immediately afterward.
- When towing a trailer, in order to maintain engine braking efficiency, do not use overdrive.

⚠ CAUTION

Always keep your foot on the brake pedal while stopped with the engine running. This prevents the vehicle from creeping.

NOTICE

Always use the brake pedal or the parking brake to hold the vehicle on an upgrade. Do not attempt to hold the vehicle using the accelerator pedal, as this can cause the transmission to overheat.

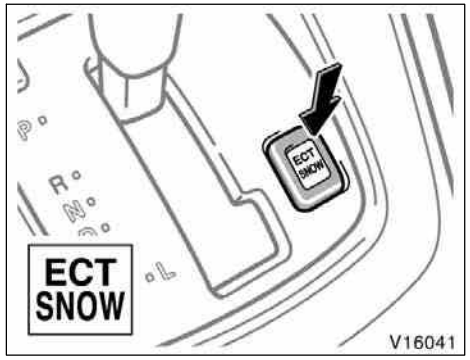

(i) Driving in snow mode

Use this mode when starting your vehicle in ice or snow.

To set the driving pattern to the snow mode, push the switch. The “ECT SNOW” indicator on the instrument cluster is on. To cancel the snow mode, push the switch again.

If the engine is turned off with the snow mode is on, the snow mode is cancelled when the engine is restarted.

(j) If you cannot shift the selector lever out of “P” position

If you cannot shift the selector lever from the “P” position even though the brake pedal is depressed, use the shift lock override button. For instructions, see “If you cannot shift automatic transmission selector lever” on page 346 in Section 4.

Traction control system (two–wheel drive models)

The traction control system automatically helps prevent the spinning of front wheels when the vehicle is started or accelerated on slippery road surfaces.

When the ignition key is turned to “ON”, the system automatically turns on.

⚠ CAUTION

Under certain slippery road conditions, full traction of the vehicle and power against front wheels cannot be maintained, even though the traction control system is in operation. Do not drive the vehicle under any speed or maneuvering conditions which may cause the vehicle to lose traction control. In situations where the road surface is covered with ice or snow, your vehicle should be fitted with snow tires or tire chains. Always drive at an appropriate and cautious speed for the present road conditions.

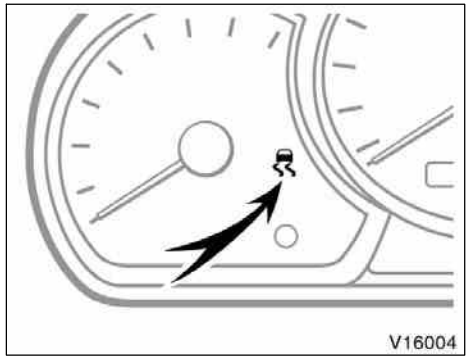

NORMAL DRIVING MODE

Leave the system on during the ordinary driving so that it can operate when needed.

You may hear a sound in the engine compartment for a few seconds when the engine is started or just after the vehicle begins to move. This means that the traction control system is in the self–check mode, but does not indicate a malfunction.

When the traction control system is operating, the following conditions occur:

- The system controls the spinning of the front wheels. At this time, the slip indicator light blinks.
- You may feel vibration or noise in your vehicle, caused by operation of the brakes. This indicates the system is functioning properly.

The slip indicator light comes on for a few seconds when the ignition key is turned to “ON”. If the indicator light does not come on when the ignition is turned on, contact your Toyota dealer.

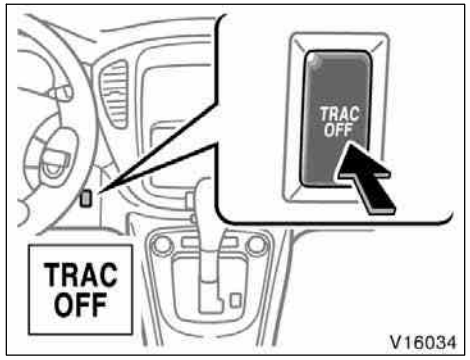

TRACTION CONTROL OFF MODE

If your wheels get stuck in an ditch when you are driving on a severe off road and sand, turn off the traction control system. This system that controls engine performance interferes with the process of freeing your wheels.

To turn off: Push “TRAC OFF” switch.

The “TRAC OFF” indicator light will come on.

The vehicle stability control system is always activated, even if the traction control system is turned off.

To turn on: Push “TRAC OFF” switch once again.

The “TRAC OFF” indicator light will go off.

“TRAC OFF” indicator light comes on for a few seconds when the ignition key is turned to “ON”. It will come on again when you push the “TRAC OFF” switch to turn off the system.

In the following cases, contact your Toyota dealer:

- The indicator light does not come on when the ignition key is turned “ON”.
- The indicator light remains on after the ignition is turned on.
- The indicator light comes on with the normal driving mode while driving.

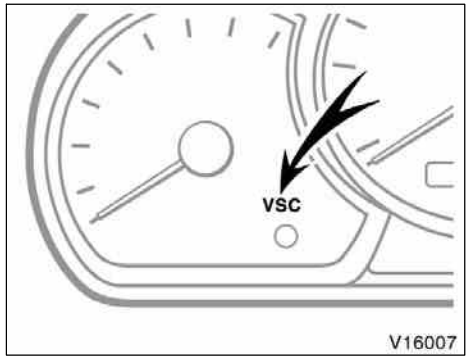

“VSC” warning light

This light warns that there is a problem somewhere in the traction control system or the vehicle stability control system.

The light will come on when the ignition key is turned to “ON” and will go off after a few seconds.

If the light comes on while driving, the system does not work. However, as conventional braking operates when applied, there is no problem to continue your driving.

In the following cases, contact your Toyota dealer:

- The warning light does not come on after the ignition key is turned to “ON”.
- The warning light remains on after the ignition key is turned to “ON”.
- The warning light comes on while driving.

The “TRAC OFF” indicator light will come on when the “VSC” warning light comes on even if the “TRAC OFF” switch is not pushed.

Traction control system (four–wheel drive models)

The traction control system automatically helps prevent the spinning of 4 wheels when the vehicle is started or accelerated on slippery road surfaces.

When the ignition key is turned to “ON”, the system automatically turns on.

CAUTION

Under certain slippery road conditions, full traction of the vehicle and power against 4 wheels cannot be maintained, even though the traction control system is in operation. Do not drive the vehicle under any speed or maneuvering conditions which may cause the vehicle to lose traction control. In situations where the road surface is covered with ice or snow, your vehicle should be fitted with snow tires or tire chains. Always drive at an appropriate and cautious speed for the present road conditions.

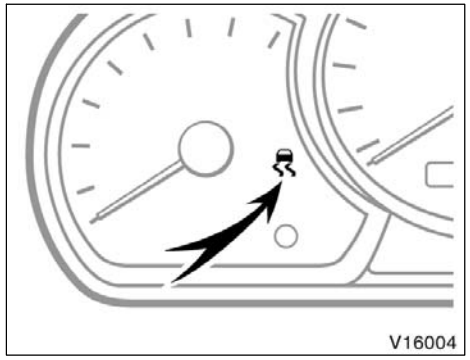

NORMAL DRIVING MODE

Leave the system on during the ordinary driving so that it can operate when needed.

You may hear a sound in the engine compartment for a few seconds when the engine is started or just after the vehicle begins to move. This means that the traction control system is in the self–check mode, but does not indicate a malfunction.

When the traction control system is operating, the following conditions occur:

- The system controls the spinning of the 4 wheels. At this time, the slip indicator light blinks.
- You may feel vibration or noise in your vehicle, caused by operation of the brakes. This indicates the system is functioning properly.

The slip indicator light comes on for a few seconds when the ignition key is turned to “ON”. If the indicator light does not come on when the ignition is turned on, contact your Toyota dealer.

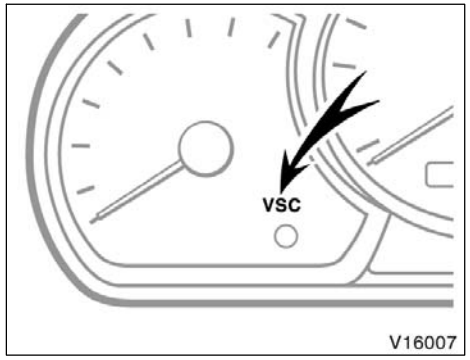

“VSC” warning light

This light warns that there is a problem somewhere in the traction control system or the vehicle stability control system.

The light will come on when the ignition key is turned to “ON” and will go off after a few seconds.

If the light comes on while driving, the system does not work. However, as conventional braking operates when applied, there is no problem to continue your driving.

In the following cases, contact your Toyota dealer:

- The warning light does not come on after the ignition key is turned to “ON”.
- The warning light remains on after the ignition key is turned to “ON”.
- The warning light comes on while driving.

Vehicle stability control system

The vehicle stability control system helps provide comprehensive control of the systems such as anti–lock brake system, traction control, engine control, etc. This system automatically controls the brakes and engine to help prevent the vehicle from skidding when cornering on a slippery road surface or operating steering wheel abruptly.

This system activates when the vehicle speed is about more than 15 km/h (9 mph).

You may hear a sound in the engine compartment for a few seconds when the engine is started or just after the vehicle begins to move. This means that the system is in the self–check mode, but does not indicate a malfunction.

CAUTION

- **Do not rely excessively on the vehicle stability control system. Even if the system is operating, it cannot completely eliminate the possibility of an accident. Always keep safe driving in mind, as reckless driving increases the risk of an accident. If the slip indicator light blinks, special care should be taken while driving.**
- **Only use tires of specified size. The size, manufacture, brand and tread pattern for all 4 tires should be the same. If you use the tires other than specified, or different type or size, the vehicle stability control system may not function correctly. When replacing the tires or wheels, contact your Toyota dealer. (See “Checking and replacing tires” on page 380 in Section 7–2.)**

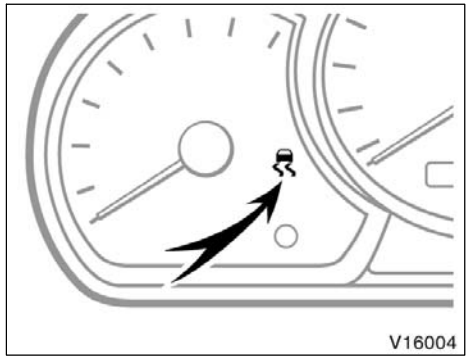

If the vehicle is going to skid during driving, the slip indicator light blinks and an alarm sounds intermittently. Special care should be taken while driving.

The slip indicator light comes on for a few seconds when the ignition key is turned to “ON”. If the indicator light does not come on when the ignition is turned on, contact your Toyota dealer.

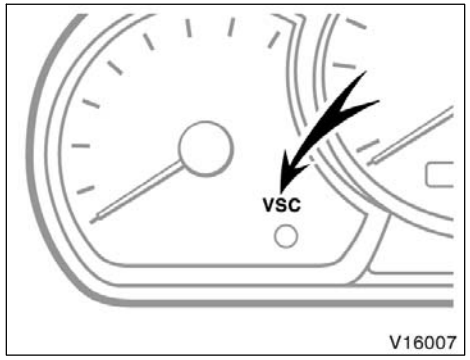

“VSC” warning light

This light warns that there is a problem somewhere in the vehicle stability control system or the traction control system.

The light will come on when the ignition key is turned to “ON” and will go off after a few seconds.

If the light comes on while driving, the system does not work. However, as conventional braking operates when applied, there is no problem to continue your driving.

In the following cases, contact your Toyota dealer:

- The warning light does not come on after the ignition key is turned to “ON”.
- The warning light remains on after the ignition key is turned to “ON”.
- The warning light comes on while driving.

Two–wheel drive models only—The “TRAC OFF” indicator light will come on when the “VSC” warning light comes on even if the “TRAC OFF” switch is not pushed.

Tire pressure warning system

The tire pressure warning system is designed to provide warning when tire inflation pressure is critically low while the vehicle is moving. The low tire pressure warning light comes on to inform you that such low tire pressure may hamper driving.

This system is not designed to operate when the vehicle is stopped. Therefore, check the tire inflation pressure regularly. The recommended cold tire inflation pressure, tire size and the vehicle capacity weight are on the tire and loading information label. (For instructions, see “Checking tire inflation pressure” on page 377 in Section 7–2.)

Installed tires should be of the specified size. They should be of the same size and construction. If tires other than the specified size are used, or if tires of different sizes or constructions are mixed, the tire pressure warning system will not function properly.

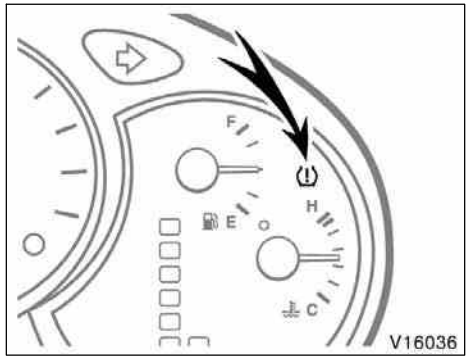

LOW TIRE PRESSURE WARNING LIGHT

This light comes on when the ignition key is turned to the “ON” position. It goes off after a few seconds. This indicates that the tire pressure warning system is functioning properly.

If the low tire pressure warning light comes on or blinks while driving, do the following.

If the warning light comes on:

1. **Adjust the tire inflation pressure to the specified level as soon as possible. (See “Tires” on page 402 in Section 8.)**
2. **Push the tire pressure warning system reset switch for a few seconds and make sure the warning light goes off.**

If the light remains on after the reset switch has been pushed, have the tire pressure warning system checked at your Toyota dealer.

If you have a flat tire, replace it with the spare tire. For details, see “If you have a flat tire” on page 329 in Section 4.

If the warning light blinks slowly (every 0.5 seconds):

The low tire pressure warning system may be malfunctioning. Contact your Toyota dealer.

If the warning light blinks rapidly (every 0.25 seconds):

The low tire pressure warning system needs to be initialized. Reset the system with the tire pressure warning system reset switch. (To reset the system, see “TIRE PRESSURE WARNING SYSTEM RESET SWITCH”.)

The tire pressure warning system does not function properly under certain circumstances. In the following cases, the low tire pressure warning light may not come on even if the tire inflation pressure is low, or it may come on when the tire inflation pressure is actually normal.

- A compact spare tire, snow tires, or tire chains are used.
- The tire inflation pressure is excessively higher than specified, or tire inflation pressure suddenly drops due to bursting or other causes.
- The vehicle is driven on a slippery road surface such as rough or frozen roads.
- The vehicle speed is less than 30 km/h (19 mph) or more than 100 km/h (62 mph), and the driving duration is less than 5 minutes.
- The tires differ in tread pattern or manufacturer.
- The tires are not the specified size.
- The tread wear is very different among the installed tires.
- Rapid acceleration/deceleration or sharp turns is continued.
- Towing a trailer.

- The loading is over the limit or imbalanced.
- Initialization was not performed correctly after replacing or rotating tires or wheels.
- The outside temperature is below 0°C (32°F) or above 40°C (104°F).

⚠ CAUTION

When the tire pressure warning light comes on, observe the following instructions:

- **Adjust the tire inflation pressure to the specified level as soon as possible.**
- **Avoid abrupt steering wheel maneuvering and braking. If the vehicle tires deteriorate, you could lose control of the steering wheel or the brakes, causing death or serious injury.**

Note: (!) The tire pressure monitoring system on your vehicle will warn you when one of your tires is significantly under–inflated and when some combinations of your tires are significantly under–inflated. However, there are other combinations of significantly under–inflated tires for which your tire pressure monitoring system may not warn you. These other combinations are relatively common, accounting for approximately half the instances in which vehicles have significantly under–inflated tires. For example, your system may not warn you when both tires on the same side or on the same axle of your vehicle are significantly under–inflated. It is particularly important, therefore, for you to check the tire pressure in all of your tires regularly and maintain proper pressure.

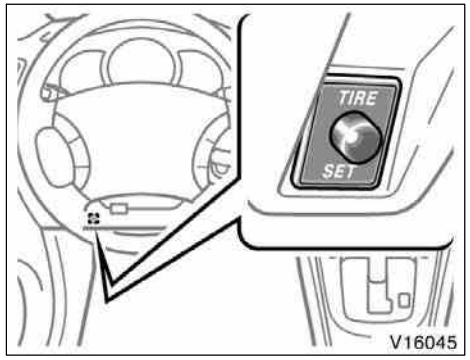

TIRE PRESSURE WARNING SYSTEM RESET SWITCH

The tire pressure warning system need to be initialized in the following conditions:

- **When the low tire pressure warning light blinks every 0.25 seconds**
- **After replacing or rotating tires or wheels**

When initializing the system, the present tire condition is stored as a standard.

To initialize the system, perform the following:

1. Park the vehicle at a safe place and apply the parking brake. Stop the engine.
2. Adjust the pressure of all the installed tires to the specified level. (See “Tires” on page 402 in Section 8.)
3. Turn the ignition key to “ON”.

   If the low tire pressure warning light comes on, push the reset switch for a few seconds and make sure the warning light goes off.
4. Push and hold the reset switch until the low tire pressure warning light blinks three times.

Initialization is completed after driving at the speeds of 30 km/h (19 mph) or over for more than one hour. If the following driving conditions are satisfied, initialization will be completed in about one hour.

- The vehicle speed is between 50 km/h (31 mph) and 100 km/h (62 mph).
- The roads are dry, smooth and straight.
- The number of passengers is 1 or 2 (including driver).

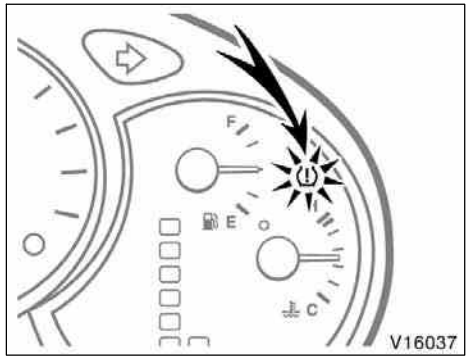

When initializing the system, make sure the low tire pressure warning light blinks three times. If the warning light does not blink three times, initializing will be failed and the tire pressure warning system will not function properly.

Do not push the reset switch without adjusting the tire inflation pressure to the specified level. Otherwise, the low tire pressure warning light may not come on even if the tire pressure is low, or it may come on when the tire inflation pressure is actually normal.

If you push the reset switch while the vehicle is moving, initialization is not performed.

If the low tire pressure warning light does not blink when you push and hold the reset switch, have the low pressure warning system checked at your Toyota dealer.

When the warning light blinks every 0.25 seconds while driving, you may be unable to reset the system. In this case, set the system again according to the above procedure.

Parking brake

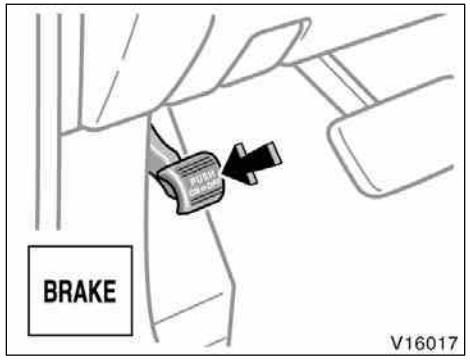

Type A

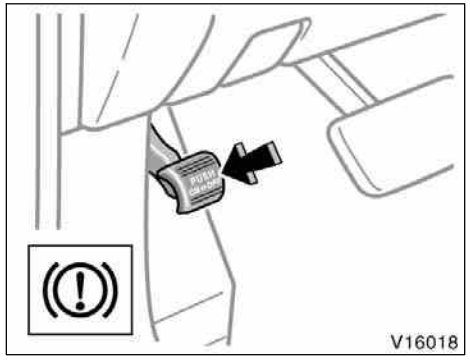

Type B

When parking, firmly apply the parking brake to avoid inadvertent creeping.

To set: Fully depress the parking brake pedal. For better holding power, first depress the brake pedal and hold it while setting the parking brake.
To release: Depress the parking brake pedal once again.

To remind you that the parking brake is set, the parking brake reminder light in the instrument panel remains on until you release the parking brake.

The buzzer will remind you to release the parking brake when the vehicle speed rises above 5 km/h (3 mph) with the parking brake is applied.

⚠ CAUTION

Before driving, be sure the parking brake is fully released and the parking brake reminder light is off.

Cruise control

The cruise control allows you to cruise the vehicle at a desired speed over 40 km/h (25 mph) even with your foot off the accelerator pedal.

Your cruising speed can be maintained up or down grades within the limits of engine performance, although a slight speed change may occur when driving up or down the grades. On steeper hills, a greater speed change will occur so it is better to drive without the cruise control.

⚠ CAUTION

- **To help maintain maximum control of your vehicle, do not use the cruise control when driving in heavy or varying traffic, or on slippery (rainy, icy or snow–covered) or winding roads.**
- **Avoid vehicle speed increases when driving downhill. If the vehicle speed is too fast in relation to the cruise control set speed, cancel the cruise control then downshift the transmission to use engine braking to slow down.**

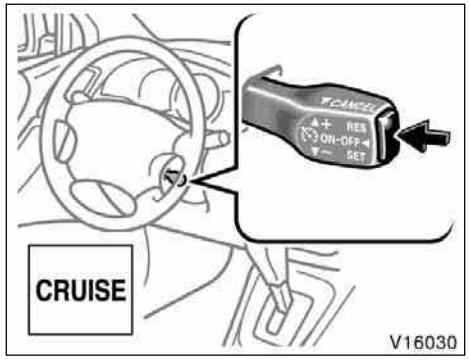

TURNING THE SYSTEM ON

To operate the cruise control, press the “ON–OFF” switch. This turns the system on. The indicator light in the instrument panel shows that you can now set the vehicle at a desired cruising speed. Another press will turn the system completely off.

⚠ CAUTION

To avoid accidental cruise control engagement, keep the “ON–OFF” switch off when not using the cruise control.

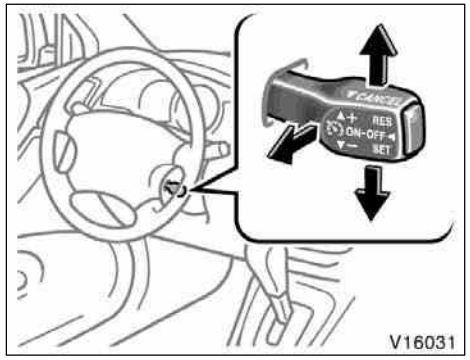

SETTING AT A DESIRED SPEED

The transmission must be in “D” before you set the cruise control speed.

Bring your vehicle to the desired speed, push the lever down in the “– SET” direction and release it. This sets the vehicle at that speed. If the speed is not satisfactory, tap the lever up for a faster speed, or tap it down for a slower speed. Each tap changes the set speed by 1.6 km/h (1.0 mph). You can now take your foot off the accelerator pedal.

If you need acceleration—for example, when passing—depress the accelerator pedal enough for the vehicle to exceed the set speed. When you release it, the vehicle will return to the speed set prior to the acceleration.

CANCELLING THE PRESET SPEED

You can cancel the preset speed by:

a. Pulling the lever in the “CANCEL” direction and releasing it.

b. Depressing the brake pedal.

If the vehicle speed falls below about 40 km/h (25 mph), the preset speed will automatically cancel out.

If the vehicle speed drops 16 km/h (10 mph) below the preset speed, the preset speed will also automatically cancel out.

If the preset speed automatically cancels out other than for the above cases, have your vehicle checked by your Toyota dealer at the earliest opportunity.

RESETTING TO A FASTER SPEED

Push the lever up in the “+ RES” direction and hold it. Release the lever when the desired speed is attained. While the lever is held up, the vehicle will gradually gain speed.

However, a faster way to reset is to accelerate the vehicle and then push the lever down in the “– SET” direction.

RESETTING TO A SLOWER SPEED

Push the lever down in the “– SET” direction and hold it. Release the lever when the desired speed is attained. While the lever is held down, the vehicle speed will gradually decrease.

However, a faster way to reset is to depress the brake pedal and then push the lever down in the “– SET” direction.

Even if you turn off the overdrive switch with the cruise control on, engine braking will not be applied because the cruise control is not cancelled. To decrease the vehicle speed, reset to a slower speed with the cruise control lever or depress the brake pedal. If you use the brake pedal, cruise control is cancelled.

RESUMING THE PRESET SPEED

If the preset speed is cancelled by pulling the control lever or by depressing the brake pedal, pushing the lever up in the “+ RES” direction will restore the speed set prior to cancellation.

However, once the vehicle speed falls below about 40 km/h (25 mph), the preset speed will not be resumed.

CRUISE CONTROL FAILURE WARNING

If the “CRUISE” indicator light in the instrument cluster flashes when using the cruise control, press the “ON–OFF” switch to turn the system off and then press it again to turn it on.

If any of the following conditions then occurs, there is some trouble in the cruise control system.

- The indicator light does not come on.
- The indicator light flashes again.
- The indicator light goes out after it comes on.

If this is the case, contact your Toyota dealer and have your vehicle inspected.

SECTION 1 – 8

OPERATION OF INSTRUMENTS AND CONTROLS

Car audio system

Reference 164
Using your audio system 164
Audio remote controls 180
Rear seat entertainment system 183
Car audio/video system operating hints 234

For vehicle equipped with Navigation system, please refer to the separate “Navigation System Owner’s Manual”.

Reference

Type 1: AM·FM radio/cassette player/compact disc player (with compact disc changer controller)

Type 2: AM·FM radio/cassette player/compact disc player with changer

Using your audio system——Some basics

This section describes some of the basic features on Toyota audio systems. Some information may not pertain to your system.

Your audio system works when the ignition key is in the “ACC” or “ON” position.

TURNING THE SYSTEM ON AND OFF

Push “PWR·VOL” to turn the audio system on and off.

Push “AM”, “FM”, “TAPE”, “DISC” or “LOAD” to turn on that function without pushing “PWR·VOL”. To turn on the cassette or compact disc player, a cassette or compact disc must be loaded in the player.

You can turn on each player by inserting a cassette tape or compact disc.

You can turn off each player by ejecting the cassette tape or compact disc. If the audio system was previously off, then the entire audio system will be turned off when you eject the cassette tape or compact disc. If the another function was previously playing, it will come on again.

SWITCHING BETWEEN FUNCTIONS

Push “AM”, “FM”, “TAPE”, “DISC” or “LOAD” if the system is already on but you want to switch from one function to another.

TONE AND BALANCE

For details about your system’s tone and balance controls, see the description of your own system.

Tone

How good an audio program sounds to you is largely determined by the mix of the treble, midrange and bass levels. In fact, different kinds of music and vocal programs usually sound better with different mixes of treble, midrange and bass.

Balance

A good balance of the left and right stereo channels and of the front and rear sound levels is also important.

Keep in mind that if you are listening to a stereo recording or broadcast, changing the right/left balance will increase the volume of one group of sounds while decreasing the volume of another.

YOUR RADIO ANTENNA

Your vehicle has the mast type antenna or on–glass antenna printed on the inside of the rear quarter window.

Mast type antenna—To remove an antenna, carefully turn it counterclockwise.

NOTICE

- ***Mast type antenna:***
  To prevent damage to the antenna, make sure it is removed before driving your Toyota through an automatic car wash.
- ***On–glass antenna (built–in on the rear quarter glass):***
  Attaching the film (especially conductive or metallic type) on the rear glass will noticeably reduce the sensitivity of the radio.

YOUR CASSETTE PLAYER

When you insert a cassette, the exposed tape should face to the right.

NOTICE

Do not oil any part of the player and do not insert anything other than cassette tapes into the slot, or the tape player may be damaged.

YOUR COMPACT DISC PLAYER (type 1)

When you insert a disc, gently push it in with the label side up. (The player will automatically eject a disc if the label side is down.) The player will play from track 1 through the end of the disc. Then it will play from track 1 again.

NOTICE

Never try to disassemble or oil any part of the compact disc player. Do not insert anything other than compact discs into the slot.

8 cm (3 in.) compact disc singles

Your compact disc player does not need an adaptor to play compact disc singles. Compact disc singles are about 8 cm (3 in.) in diameter–smaller than standard discs.

After you eject a compact disc single, do not insert a standard 12 cm (4.7 in.) disc until “DISC” disappears from the display.

NOTICE

Do not use an adaptor for compact disc singles—it could cause tracking errors or interfere with the ejection of compact discs.

YOUR COMPACT DISC PLAYER WITH CHANGER (type 2)

When you insert a disc, push the “LOAD” button and gently push the disc in with the label side up. (The player will automatically eject a disc if the label side is down.) This compact disc player can store up to six discs. The player will play from track 1 through the end of the disc. Then it will play from track 1 of the next disc.

The player is intended for use with 12 cm (4.7 in.) discs only.

NOTICE

- ***Do not stack up two discs for insertion, or it will cause damage to the compact disc auto changer. Insert only one compact disc into slot at a time.***
- ***Never try to disassemble or oil any part of the compact disc player. Do not insert anything except a compact disc into the slot.***

—Controls and features

▶Type 1

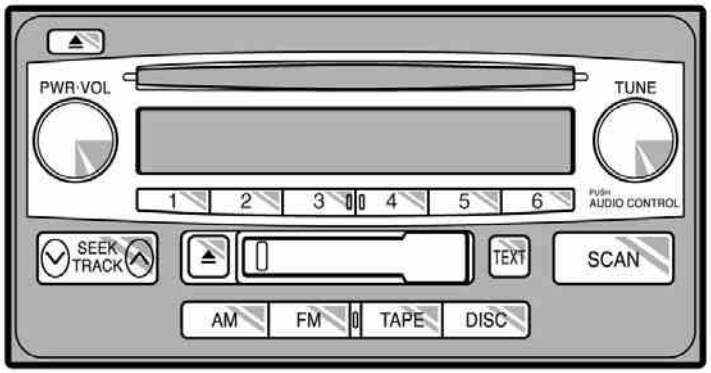

V17098y

Details of specific buttons, controls and features are described in the alphabetical list that follows.

1 2 3 4 5 6 (Preset buttons)

These buttons are used to preset and tune in radio stations.

To preset a station to a button: Tune in the desired station. (See “TUNE” or “SEEK”.) Push and hold down the button until you hear a beep—this will set the station to the button. The preset button number will appear on the display.

To recall a preset station: Push the button for the station you want. The preset button number and station frequency will appear on the display.

This radio can store one AM and two FM stations for each button. (The display will show “AM”, “FM1” or “FM2” when you push “AM” or “FM” button.)

⏏ (Eject button)

Push the cassette tape eject button to eject a cassette. Push the compact disc eject button to eject a compact disc.

◀|▶ (Program)

Push “◀|▶” (preset button 4) to select the other side of a cassette tape. The display indicates which side is currently selected (“▲” indicates the top side, “▼” indicates the bottom side).

Auto–reverse feature: After the cassette player reaches the end of a tape side, it automatically reverses and begins to play the other side. This is true whether the cassette was playing or fast forwarding.

◀◀/▶▶ (Reverse/Fast–forward button)

Cassette player

Push “▶▶” (preset button 6) to fast–forward a cassette tape. “FF” will appear on the display. Push “◀◀” (preset button 5) to rewind a tape. “REW” will appear on the display.

To stop the tape while it is fast–forwarding, push “▶▶” or “TAPE” button. To stop the tape while it is rewinding, push “◀◀” or “TAPE” button.

If a tape rewinds completely, the cassette player will stop and then play that same side. If a tape fast–forwards completely, the cassette will play the other side of the tape using the auto–reverse feature.

Compact disc player

Push and hold “▶▶” (preset button 6) or “◀◀” (preset button 5) to fast forward or reverse within a compact disc. When you release the button, the compact disc player will resume playing.

AM

Push the “AM” button to turn on the radio and select the AM band. “AM” will appear on the display.

AUDIO CONTROL (Tone and sound balance adjustment function)

Each time you push the “AUDIO CONTROL” knob, the mode changes. To adjust the tone and balance, turn the knob.

BAS: Adjusts low–pitched tones. The display ranges from –5 to 5.

MID (on some models): Adjusts mid–pitched tones. The display ranges from –5 to 5.

TRE: Adjusts high–pitched tones. The display ranges from –5 to 5.

FAD: Adjusts the sound balance between the front and rear speakers. The display ranges from F7 to R7.

BAL: Adjusts the sound balance between the right and left speakers. The display ranges from L7 to R7.

DISC (Compact disc)

Push the “DISC” button to play a compact disc.

When the audio system is set into compact disc operation, the display shows the track, or track and disc number currently being played.

Vehicles with rear seat entertainment system—

If a DVD disc or CD has already been set in the DVD player, the current mode can be changed to DVD mode by pushing the “DISC” button. “AUX” will appear on the display when the DVD disc or CD is played.

Error messages

If the player malfunctions, your audio system will display one of the six following error messages.

“WAIT”: The compact disc player unit may be too hot. Allow the player to cool down.

“ERROR 1”: The disc may be dirty, damaged or inserted incorrectly (up–side down). Clean the disc and re–insert it.

“NO DISC”: The compact disc changer of separate unit is empty. Insert a disc.

“ERROR 3”: There is a problem inside the system. Eject the disc or magazine. Set the disc or magazine again.

“ERROR 4”: Over–current. Ask your Toyota dealer to inspect.

“CD OPEN”: The compact disc changer lid of separate unit is open. Close the compact disc changer lid.

If the malfunction still exists, take your vehicle to your Toyota dealer.

∨ DISC ∧

With compact disc changer only—

Use these buttons to select the disc you want to listen to.

Push “∨” (preset button 3) or “∧” (preset button 4) until the number of the disc you want to listen appears on the display.

Dolby® DD B NR*

If you are listening to a tape that was recorded with Dolby® B Noise Reduction, push “DD” (preset button 3). “DD” will appear on the display. Push the button again to turn off Dolby® B NR.

The Dolby NR mode reduces tape noise by about 10 dB. For best sound reproduction, play your tapes with this button on or off according to the mode used to record the tape.

*: Dolby noise reduction manufactured under license from Dolby Laboratories Licensing Corporation. “DOLBY” and the double D symbol DD are trademarks of Dolby Laboratories Licensing Corporation.

FM

Push the “FM” button to turn on the radio and select the FM band. “FM1” or “FM2” will appear on the display. This system allows you to set twelve FM stations, two for each of the preset button.

PWR·VOL (Power and Volume)

Push “PWR·VOL” to turn the audio system on and off. Turn “PWR·VOL” to adjust the volume.

RAND (Random)

There are two random features—You can either listen to the tracks on one compact disc in random order, or listen to the tracks on all the compact discs in the magazine in random order.

To play the tracks on one disc in random order:
Quickly push and release “RAND” (preset button 1). “RAND” will appear on the display and the player will perform the tracks on the disc you are listening to in random order. To turn off the random feature, push this button again.

With compact disc changer only—

To play all the tracks in the magazine in random order:
Push and hold “RAND” (preset button 1) until you hear a beep. “RAND” will appear on the display and the player will perform all the tracks on all the discs in the magazine in random order. To turn off the random feature, push this button again.

RPT (Repeat)

Cassette player

Push “RPT” (preset button 2) while the track is playing. “RPT” will appear on the display. When the track ends, it will automatically rewind and replay. To turn off the repeat feature, push this button again.

There must be at least 3 seconds of blank space between tracks in order for the repeat feature to work correctly.

Compact disc player

There are two repeat features—You can either replay a disc track or a whole compact disc.

Repeating a track:
Quickly push and release “RPT” (preset button 2) while the track is playing. “RPT” will appear on the display. When the track ends, it will automatically replay. To turn off the repeat feature, push this button again.

With compact disc changer only—

Repeating a disc:
Push and hold “RPT” (preset button 2) until you hear a beep. “RPT” will appear on the display. The player will repeat all the tracks on the disc you are listening to. When the disc ends, the player will automatically go back to the top track of the disc and replay. To turn off the repeat feature, push this button again.

SCAN

Radio

You can either scan all the frequencies on a band or scan only the preset stations for that band.

To scan the preset stations:
Push and hold the “SCAN” button until you hear a beep. The radio will tune in the next preset station up the band, stay there for 5 seconds, and then move to the next preset station. To stop scanning, push this button again.

To scan all the frequencies:
Quickly push and release the “SCAN” button. The radio will find the next station up the station band, stay there for 5 seconds, and then scan again to the next station. To stop scanning, push this button again.

Compact disc player

There are two scan features—You can either scan the tracks on a specific disc or scan the first tracks of all the discs in the magazine.

Scanning the tracks on a disc:
Quickly push and release the “SCAN” button. “SCAN” will appear on the display and the player will scan all the tracks on the disc you are listening to. To stop scanning, push this button again. If the player has scanned all the tracks on the disc, it will stop scanning.

With compact disc changer only—

Scanning the first tracks of all the discs in the magazine:
Push the “SCAN” button until you hear a beep. “ SCAN” will appear on the display and the player will scan the first track of the next disc. To stop scanning, push this button again. If the player has scanned all the discs, it will stop scanning.

SEEK/TRACK (Seeking/Track up/down)

Radio

In the seek mode, the radio finds and plays the next station up or down the station band.

To seek the next station, quickly push and release “∧” or “∨” side of the “SEEK/TRACK” button. Do this again to find the station after that.

Cassette player

Use this button to skip up or down to locate a song or recording.

You can select up to nine recordings (including current one).

A blank space of at least 3 seconds is considered to be a start of a recording.

When a beginning of a tape is reached, the player automatically resumes play.

When the end of the tape is reached, the player automatically reverses sides and resumes normal play.

In addition, the feature may not work well with some spoken word, live, or classical recordings.

Compact disc player

Use this button to skip up or down to a different track.

Push “∧” or “∨” side of the “SEEK/TRACK” button until the number of the track you want to listen to appears on the display. If you want to return to the beginning of the current track, quickly push the down side of the button one time.

Vehicles with rear seat entertainment system—

While the DVD player is in operation, the chapter or track can be changed by pushing the “∧” or “∨” side of the “SEEK/TRACK” button.

ST (Stereo reception) display

Your radio automatically changes to stereo reception when a stereo broadcast is received. “ST” appears on the display. If the signal becomes weak, the radio reduces the amount of channel separation to prevent the weak signal from creating noise. If the signal becomes extremely weak, the radio switches from stereo to mono reception.

TAPE

Push the “TAPE” button to play a cassette tape.

TEXT

This button is used to change the display for the compact disc that contains text data.

To change the display, quickly push and release the “TEXT” button while the compact disc is playing. The display changes in the order from the elapsed time to disc title to track title, then back to the elapsed time.

If this button is pushed while a compact disc that does not contain text data is playing, “NO TITLE” will appear on the display.

If the entire disc or track title does not appear on the display, push and hold the button until you hear a beep. The rest of the title will appear.

TUNE (Tuning)

Turn the “TUNE” knob clockwise to step up the frequency. Turn the knob counterclockwise to step down the frequency.

▶**Type 2**

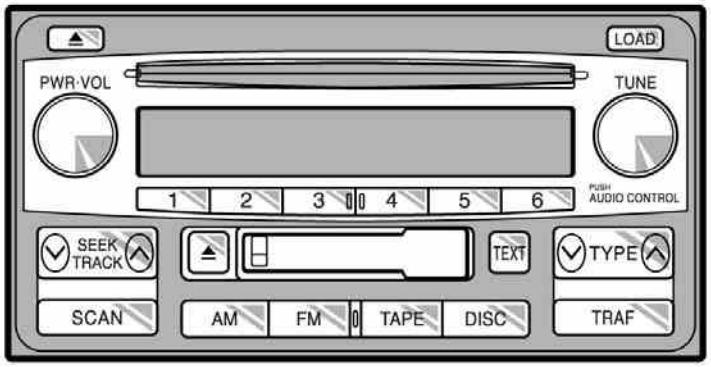

V17100y

Details of specific buttons, controls and features are described in the alphabetical list that follows.

1 2 3 4 5 6 (Preset buttons)

These buttons are used to preset and tune in radio stations.

To preset a station to a button: Tune in the desired station. (See “TUNE” or “SEEK”.) Push and hold down the button until you hear a beep—this will set the station to the button. The preset button number will appear on the display.

To recall a preset station: Push the button for the station you want. The preset button number and station frequency will appear on the display.

This radio can store one AM and two FM for each button. (The display will show “AM”, “FM1” or “FM2” when you push “AM” or “FM” button.)

⏏ (Eject button)

Cassette player

This button is used to eject a cassette.

Compact disc player

This button is used to eject one or all compact discs.

To eject the current compact disc, push and release the compact disc eject button.

To eject a specific disc, push “∨” (preset button 3) or “∧” (preset button 4) until the number of the disc you want to eject is displayed. Push and release the eject button.

To eject all discs at a time, press and hold the eject button until you hear a beep. The last compact disc played before pushing the button will be ejected first. If the ejected disc is not removed for a long time, the eject function will be cancelled.

◀❙▶ (Program)

Push “◀❙▶” (preset button 4) to select the other side of a cassette tape. The display indicates which side is currently selected (“▲” indicates the top side, “▼” indicates the bottom side).

Auto–reverse feature: After the cassette player reaches the end of a tape side, it automatically reverses and begins to play the other side. This is true whether the cassette was playing or fast forwarding.

◀◀/▶▶ (Reverse/Fast–forward button)

Cassette player

Push “▶▶” (preset button 6) to fast–forward a cassette tape. “FF” will appear on the display. Push “◀◀” (preset button 5) to rewind a tape. “REW” will appear on the display.

To stop the tape while it is fast–forwarding, push “▶▶” or “TAPE” button. To stop the tape while it is rewinding, push “◀◀” or “TAPE” button.

If a tape rewinds completely, the cassette player will stop and then play that same side. If a tape fast–forwards completely, the cassette will play the other side of the tape using the auto–reverse feature.

Compact disc player

Push and hold “▶▶” (preset button 6) or “◀◀” (preset button 5) to fast forward or reverse within a compact disc. When you release the button, the compact disc player will resume playing.

AM

Push the “AM” button to turn on the radio and select the AM band. “AM” will appear on the display.

AUDIO CONTROL (Tone and sound balance adjustment function)

Each time you push the “AUDIO CONTROL” knob, the mode changes. To adjust the tone and balance, turn the knob.

BAS: Adjusts low–pitched tones. The display ranges from –5 to 5.

MID: Adjusts mid–pitched tones. The display ranges from –5 to 5.

TRE: Adjusts high–pitched tones. The display ranges from –5 to 5.

FAD: Adjusts the sound balance between the front and rear speakers. The display ranges from F7 to R7.

BAL: Adjusts the sound balance between the right and left speakers. The display ranges from L7 to R7.

DISC (Compact disc)

Push the “DISC” button to play a compact disc.

When the audio system is set into compact disc operation, the display shows the track, or track and disc number currently being played.

Vehicles with rear seat entertainment system—

If a DVD disc or CD has already been set in the DVD player, the current mode can be changed to DVD mode by pushing the “DISC” button. “AUX” will appear on the display when the DVD disc or CD is played.

Error messages

If the player malfunctions, your audio system will display one of the six following error messages.

“WAIT”: The compact disc player unit may be too hot. Allow the player to cool down.

“ERROR 1”: The disc may be dirty, damaged or inserted incorrectly (up–side down). Clean the disc and re–insert it.

“NO DISC”: The compact disc changer of separate unit is empty. Insert a disc.

“ERROR 3”: There is a problem inside the system. Eject the disc or magazine. Set the disc or magazine again.

“ERROR 4”: Over–current. Ask your Toyota dealer to inspect.

“CD OPEN”: The compact disc changer lid of separate unit is open. Close the compact disc changer lid.

If the malfunction still exists, take your vehicle to your Toyota dealer.

∨ DISC ∧

Use these buttons to select a disc you want to listen to.

Push “∨” (preset button 3) or “∧” (preset button 4) until the number of the disc you want to listen to appears on the display.

Dolby® DD B NR*

If you are listening to a tape that was recorded with Dolby® B Noise Reduction, push “DD” (preset button 3). “DD” will appear on the display. Push the button again to turn off Dolby® B NR.

The Dolby NR mode reduces tape noise by about 10 dB. For best sound reproduction, play your tapes with this button on or off according to the mode used to record the tape.

*: Dolby noise reduction manufactured under license from Dolby Laboratories Licensing Corporation. “DOLBY” and the double D symbol DD are trademarks of Dolby Laboratories Licensing Corporation.

FM

Push the “FM” button to turn on the radio and select the FM band. “FM1” or “FM2” will appear on the display. This system allows you to set twelve FM, two for each of the preset button.

LOAD

This button is used to load the compact discs in the compact disc player. This player can store up to six discs.

To load one compact disc only, quickly push and release the button, then insert a compact disc. After the disc is loaded, the shutter of the slot will close.

If no compact disc is inserted, the shutter will close after 15 seconds.

To load multiple compact discs, push and hold the button (until you hear a beep when the audio system is on), then insert the first compact disc. After the disc is loaded, the shutter of the slot will close. After a few seconds, the shutter will automatically open again so the next disc can be inserted. The same process can be applied for loading the rest of the discs. If the player is full of discs, “DISC FULL” will appear on the display.

If no compact disc is inserted, the shutter will close after 15 seconds.

PWR·VOL (Power and Volume)

Push “PWR·VOL” to turn the audio system on and off. Turn “PWR·VOL” to adjust the volume.

RAND (Random)

There are two random features—you can either listen to the tracks on one compact disc in random order, or listen to the tracks on all the compact discs in the magazine in random order.

To play the tracks on one disc in random order:
Quickly push and release “RAND” (preset button 1). “RAND” will appear on the display and the player will perform the tracks on the disc you are listening to in random order. To turn off the random feature, push this button again.

To play all the tracks in the magazine in random order:
Push and hold “RAND” (preset button 1) until you hear a beep. “RAND” will appear on the display and the player will perform all the tracks on all the discs in the magazine in random order. To turn off the random feature, push this button again.

RDS (Radio Data System) display

The radio will automatically switch to the RDS mode to receive an RDS station while tuned to FM broadcasts. “RDS” will appear on the display.

RPT (Repeat)

Cassette player

Push “RPT” (preset button 2) while the track is playing. “RPT” will appear on the display. When the track ends, it will automatically rewind and replay. To turn off the repeat feature, push this button again.

There must be at least 3 seconds of blank space between tracks in order for the repeat feature to work correctly.

Compact disc player

There are two repeat features—You can either replay a disc track or a whole compact disc.

Repeating a track:
Quickly push and release “RPT” (preset button 2) while the track is playing. “RPT” will appear on the display. When the track ends, it will automatically replay. To turn off the repeat feature, push this button again.

Repeating a disc:
Push and hold “RPT” (preset button 2) until you hear a beep. “RPT” will appear on the display. The player will repeat all the tracks on the disc you are listening to. When the disc ends, the player will automatically go back to the top track of the disc and replay. To turn off the repeat feature, push this button again.

SCAN

Radio

You can either scan all the frequencies on a band or scan only the preset stations for that band.

To scan the preset stations:
Push and hold the “SCAN” button until you hear a beep. The radio will tune in the next preset station up the band, stay there for 5 seconds, and then move to the next preset station. To stop scanning, push this button again.

To scan all the frequencies:
Quickly push and release the “SCAN” button. The radio will find the next station up the station band, stay there for 5 seconds, and then scan again to the next station. To stop scanning, push this button again.

Compact disc player

There are two scan features—you can either scan the tracks on a specific disc or scan the first tracks of all the discs in the magazine.

Scanning the tracks on a disc:
Quickly push and release the “SCAN” button. “SCAN” will appear on the display and the player will scan all the tracks on the disc you are listening to. To stop scanning, push this button again. If the player has scanned all the tracks on the disc, it will stop scanning.

Scanning the first tracks of all the discs in the magazine:
Push the “SCAN” button until you hear a beep. “SCAN” will appear on the display and the player will scan the first track of the next disc. To stop scanning, push this button again. If the player has scanned all the discs, it will stop scanning.

SEEK/TRACK (Seeking/Track up/down)

Radio

In the seek mode, the radio finds and plays the next station up or down the station band.

To seek the next station, quickly push and release “∧” or “∨” side of the “SEEK/TRACK” button. Do this again to find the station after that.

Cassette player

Use this button to skip up or down to locate a song or recording.

You can select up to nine recordings (including current one).

A blank space of at least 3 seconds is considered to be a start of a recording.

When a beginning of a tape is reached, the player automatically resumes play.

When the end of the tape is reached, the player automatically reverses sides and resumes normal play.

In addition, the feature may not work well with some spoken word, live, or classical recordings.

Compact disc player

Use this button to skip up or down to a different track.

Push “∧” or “∨” side of the “SEEK/ TRACK” button until the number of the track you want to listen to appears on the display. If you want to return to the beginning of the current track, quickly push the down side of the button one time.

Vehicles with rear seat entertainment system—

While the DVD player is in operation, the chapter or track can be changed by pushing the “∧” or “∨” side of the “SEEK/ TRACK” button.

ST (Stereo reception) display

Your radio automatically changes to stereo reception when a stereo broadcast is received. “ST” appears on the display. If the signal becomes weak, the radio reduces the amount of channel separation to prevent the weak signal from creating noise. If the signal becomes extremely weak, the radio switches from stereo to mono reception.

TAPE

Push the “TAPE” button to play a cassette tape.

TEXT

Radio

This button is operational only in RDS mode.

When an RDS station transmits a text message, “MSG” will appear on the displayed.

To display the text message, first push the “TEXT” button to change the radio station display. Then push the “TEXT” button once more to display, and the message will appear on the display.

If the entire the message is not displayed, “▶” will appear on the display. To display the rest of the message, push and hold the “TEXT” button until you hear a beep.

After the entire message has been displayed, the message will disappear.

The message display will be canceled if any button that affects the display is pushed.

If no messages is received, “NO MESSAGE” will appear on the display, and the display returns to the previous mode.

The message display will be canceled if you activate any function that affects the display.

Compact disc player

This button is used to change the display for the compact disc that contains text data.

To change the display, quickly push and release the “TEXT” button while the compact disc is playing. The display changes in the order from the elapsed time to disc title to track title, then back to the elapsed time.

If this button is pushed while a compact disc that does not contain text data is playing, “NO TITLE” will appear on the display.

If the entire disc or track title does not appear on the display, push and hold the button until you hear a beep. The rest of the title will appear.

TRAF (Traffic)

This button turns the traffic announcement (TA) feature on and off. This button is operational only in FM mode.

By pushing the “TRAF” button, “TRAF SEEK” will flash on the display and the radio will seek a traffic program station.

After the traffic announcement program is over, the display returns to the previous mode.

If no traffic program station is found, “NO TRAFINFO” appears on the display, and the display returns to the previous mode and a beep sounds.

To cancel the traffic announcement, push this button again.

TUNE (Tuning)

Turn the “TUNE” knob clockwise to step up the frequency. Turn the knob counter-clockwise to step down the frequency.

TYPE (Program Types)

When you push “∧” or “∨” of the “TYPE” button while receiving an RDS station, the current program type will appear on the display. If the system is receiving a station that is not RDS, “NO PTY” will appear.

Repeat this operation within 6 seconds to display the program types in the following order:

- ROCK
- EASY LIS (Easy listening)
- CLS/JAZZ (Classical music and Jazz)
- R&B (Rhythm and Blues)
- INFORM (Information)
- RELIGION
- MISC (Miscellaneous)
- ALERT (Emergency message)

To seek or scan for the same type of program, push the “SEEK/TRACK” or “SCAN” button while the program type is displayed.

If no program is found, “NOTHING” will appear on the display. The previous program information will resume.

When the system is left untouched for 6 seconds, the program type display will change to the frequency display.

Audio remote controls (steering switches)

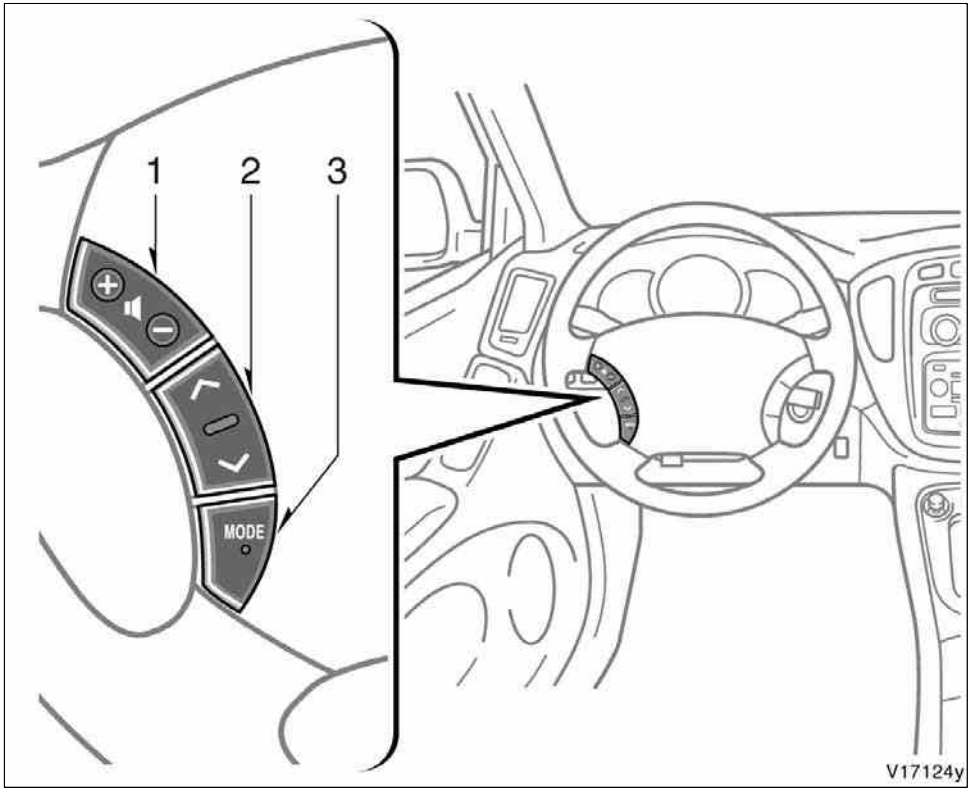

Some parts of the audio system can be adjusted using the switches on the steering wheel.

Details of the specific switches, controls, and features are described below.

1. “+ 🔈 –” switch
2. “∧∨” switch
3. “MODE” switch

1. “+ 🔈 –” switch

Push “+” to increase the volume. The volume continues to increase while the switch is being pushed.

Push “–” to decrease the volume. The volume continues to decrease while the switch is being pushed.

2. “∧∨” switch

Radio

This switch has the following features—

To select a preset station:
Quickly push and release the “∧” or “∨” side of the switch. Do this again to select the next preset station.

To seek a station:
Push and hold the “∧” or “∨” side of the switch until you hear a beep. Do this again to find the next station. If you push the switch on either side during the seek mode, seeking will be cancelled.

To step up or down the frequency, push and hold the switch even after you hear a beep. When you release from the switch, the radio will begin seeking up or down for a station. Do this again to find the next station.

Cassette player

This switch has the following features—

To skip to a different track in either direction:
Quickly push and release the “∧” or “∨” side of the switch. “FF 1” or “REW 1” will appear on the display.

Next, push either side of the track switch until the track you want to listen to is set. If you push the switch ten times, the skip function will turn off. (You can skip up to nine tracks at a time.)

When counting the number of the tracks you want to rewind, remember to count the current track as well. For example, if you want to rewind to a song that is two tracks before the song you are listening to, push the “∨” side of the switch three times.

If you push the track switch further than you wanted to, push the other side of the switch. The track number will be increased or reduced.

The track number you select is not valid if it is higher than the number of the tracks remaining on the current side of the cassette.

- When the tape reaches to the beginning, the player will automatically start playing that side.
- After the tape reaches to the end, the player will automatically reverse and start playing the other side.

There must be at least 3 seconds of blank space between tracks for the track switch to work correctly. In addition, the feature may not work well with some spoken, live, or classical recordings.

To fast forward or reverse:
Push and hold the “∧” side of the switch to fast forward a cassette tape. “FF” will appear on the display. Push and hold the “∨” side of the switch to rewind a tape. “REW” will appear on the display.

To stop the tape while it is fast forwarding, push the “∧” side of the switch. To stop the tape while it is rewinding, push the “∨” side of the switch.

If a tape rewinds completely, the cassette player will stop and then play that same side. If a tape fast forwards completely, the cassette will play the other side of the tape using the auto–reverse feature.

Compact disc player

Use this switch to skip up or down to a different track in either direction.

Quickly push and release the “∧” or “∨” side of the switch until the track you want to listen to is set. If you want to return to the beginning of the current track, push the “∨” side of the switch once, quickly.

With compact disc changer only—

Push and hold the “∧” or “∨” side of the switch until the disc you want to listen to is set.

3. “MODE” switch

Push “MODE” switch to select an audio mode. Each push changes the mode sequentially if the desired mode is ready to use.

To turn the audio system on, push the “MODE” switch.

To turn the audio system off, push and hold the “MODE” switch until the system turns off.

Rear seat entertainment system—

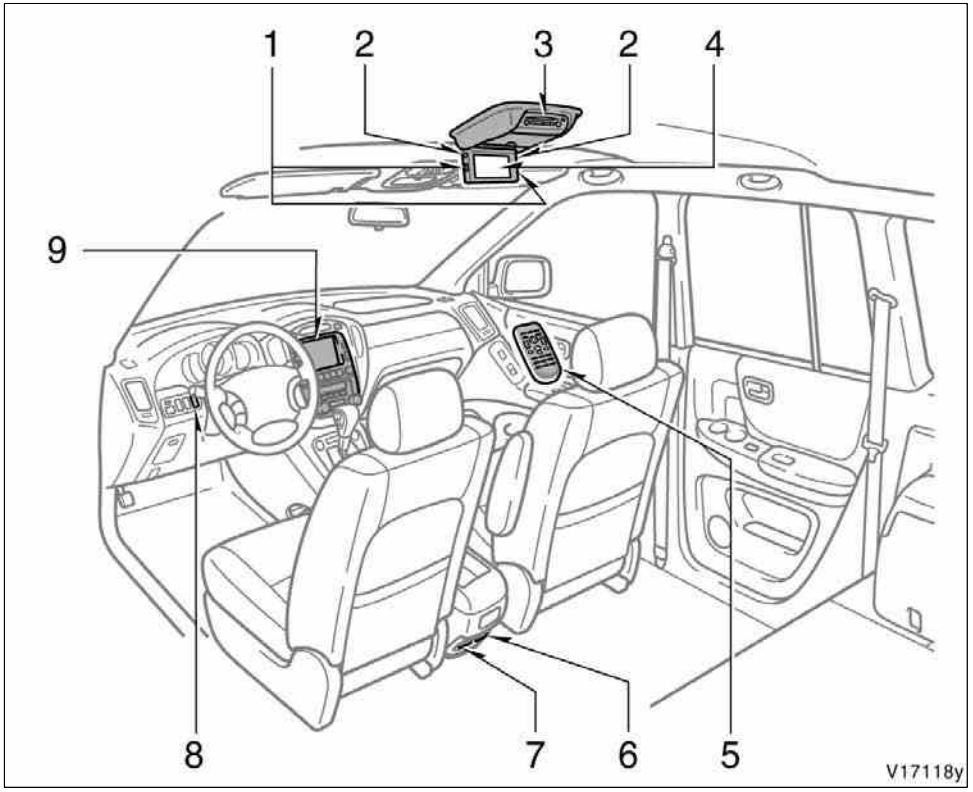

The rear seat entertainment system consists of the following components.

1. Headphone volume control dials
2. Headphone input jacks
3. DVD player
4. Rear seat entertainment system display
5. Rear seat entertainment system controller
6. Input terminal adapter
7. Power outlet
8. Power outlet main switch
9. Front audio system

The rear seat entertainment system is designed for the rear passengers to enjoy audio and DVD video separately from the front audio system.

The rear seat entertainment system can be operated when the ignition key is in the “ACC” or “ON” position.

The rear passengers can enjoy all modes (AM and FM radio, cassette tape player, compact disc player with changer and DVD player) on the rear seat entertainment system only if a cassette tape and a compact disc are loaded in the front audio system.

The rear seat entertainment system can play DVD video, audio CD, video CD, CD text, dts–CD or DVD audio only when a disc is loaded in the DVD player.

You can enjoy videos and sound when your personal audio system is connected to the input terminal adapter on the rear console box. For details, refer to the manufacturer’s instructions.

You can enjoy the rear seat entertainment system with commercial headphone. See “—Headphone input jacks” on page 233 in this Section for details.

You can also enjoy the rear seat entertainment system with a wireless headphone. The wireless headphone can be used within rear seat. If the signal becomes weak, the headphone will mute. For details, refer to the manufacturer’s instructions.

With some wireless headphone generally available in the market, it may be difficult to catch sound properly. Toyota recommends the use of Toyota genuine wireless headphone.

You can purchase a wireless headphone at a Toyota dealer.

⚠ CAUTION

- **Do not drive with using the headphone. Otherwise, you may be hard to hear the sound from the outside while using the headphone and may cause an accident.**
- **Conversational speech on some DVDs is recorded at a low volume to emphasize the impact of sound effects. If you adjust the volume assuming that the conversations represent the maximum volume level that the DVD will play, you may be startled by louder sound effects or when you change to a different audio source. Be sure to adjust the volume with this in mind.**

  Make sure the volume is not increased, before you turn on the headphone.

—Display

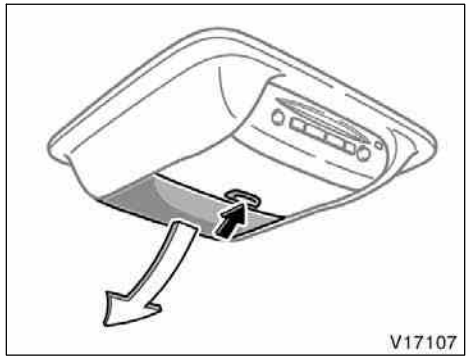

To open the display, push the lock release button.

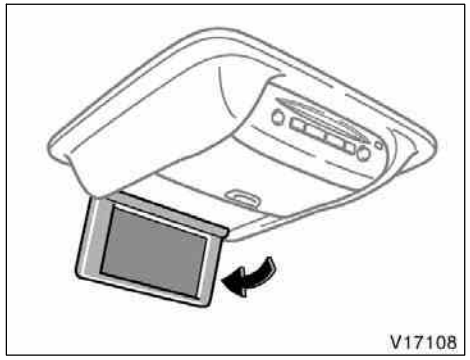

Push down the display until it is locked.

NOTICE

The screen should be cleaned with a dry soft cloth. If the screen is pushed by hand or wiped with a hard cloth, the surface of the screen may be scratched.

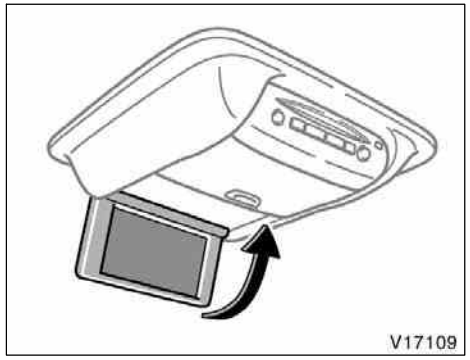

To close, push up the display until you hear a click.

The illumination of the screen is automatically turned off when the display is closed. However, the rear seat entertainment system is not turned off.

⚠ CAUTION

To reduce the chance of injury in case of an accident or sudden stop while driving, close the display when it is not in use.

NOTICE

- ***Benzene or alkaline solutions may damage the coated surface of the screen.***
- ***To prevent the battery from being discharged, do not turn on the rear seat entertainment system longer than necessary when the engine is not running.***

—Rear seat entertainment system controller

The rear seat entertainment system can be operated with the rear seat entertainment system controller and buttons on the DVD player unit. The system cannot be operated by touching the switches on the screen directly.

⚠ CAUTION

Do not disassemble or modify the controller. It may cause an accident, fire or electric shock.

NOTICE

Keep the controller away from direct sunlight, high heat and high humidity. These conditions could cause the case to deform or the battery to explode or leak.

BEFORE USING THE CONTROLLER (for new vehicle owners)

A battery is already set in the controller with an insulating sheet, which prevents the battery from being discharged. Before using the controller, remove the insulating sheet according to the following procedure.

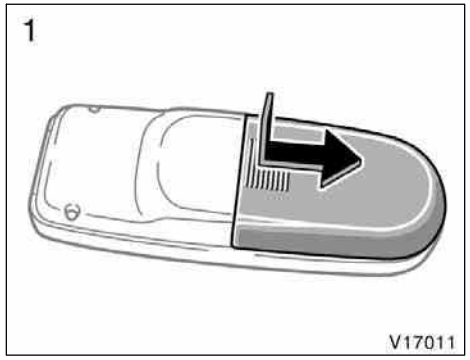

1. Remove the cover of the controller as shown.

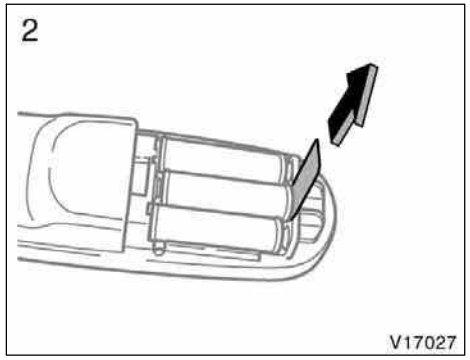

2. Remove the insulating sheet.

USING THE CONTROLLER

To use the rear seat entertainment system controller, direct the signal output portion of the controller to the signal reception portion of the rear seat entertainment system display.

The controller does not operate properly when the signal reception portion of the display is exposed to direct sunlight. Block the display from direct sunlight.

⚠ CAUTION

To reduce the chance of injury in case of an accident or a sudden stop while driving, stow the controller in the console box or front seatback pocket when it is not in use.

NOTICE

Observe the followings, otherwise the controller may be damaged.

- ***Do not drop or strongly knock the controller against hard objects.***
- ***Do not sit on or place heavy objects on the controller.***
- ***Do not leave the controller exposed to high temperatures (such as on the instrument panel) for a long time.***

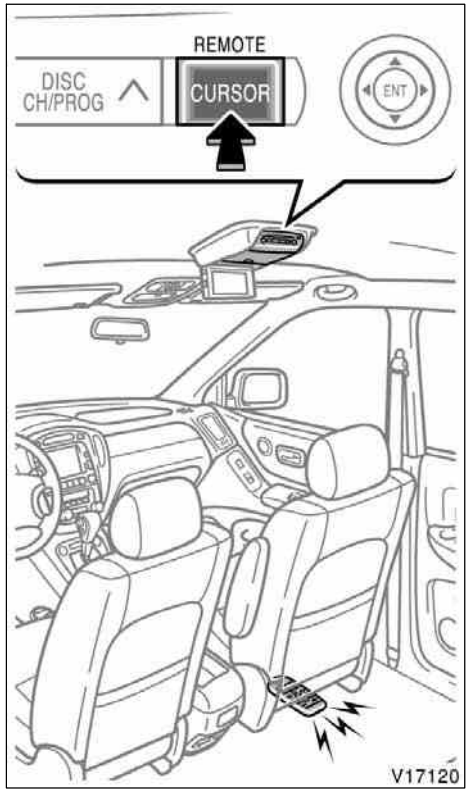

LOCATING THE CONTROLLER

If you lose sight of the controller, push and hold the “CURSOR (REMOTE)” button on the DVD player unit until you hear a beep. A buzzer sounds from the controller to let you know where it is.

To stop the buzzer, push any button of the controller.

If the controller is located close to something that blocks the signal, such as some kind of metal, the controller may not receive the signal and the buzzer may not sound.

FCC Information

Caution: Any changes or modifications in construction of this device which are not expressly approved by the party responsible for compliance could void the user’s authority to operate the equipment.

FCC Label Information

This device complies with part 15 of the FCC Rules. Operation is subject to the following two conditions: (1) This device may not cause harmful interference, and (2) this device must accept any interference received, Including interference that may cause undesired operation.

—Control buttons

▶Controller

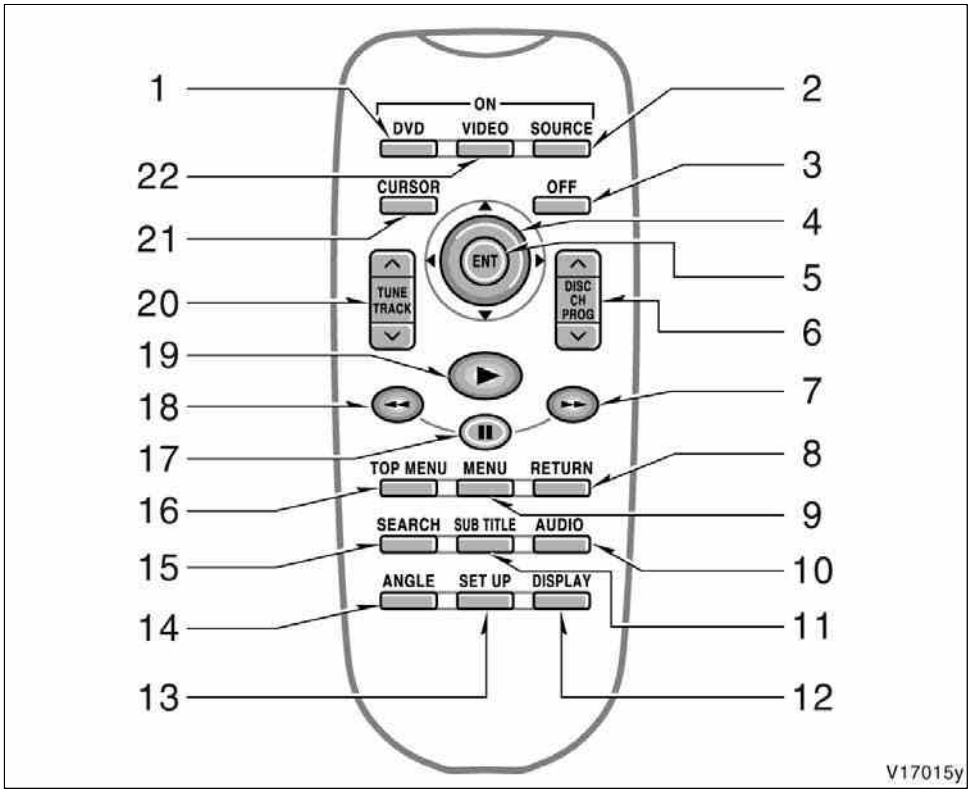

1. “DVD” button

   This button turns on the DVD mode.

2. “SOURCE” button

   This button turns on the rear seat entertainment system and selects the mode.

3. “OFF” button

   This button turns off the rear seat entertainment system.

4. Joystick

   This joystick selects a control switch, mode switch on the screen or the menu for the disc.

5. “ENT” button

   This button inputs the selected switch or the selected menu for the disc.

6. “DISC/CH/PROG” button

   This button skips directly to a desired preset station, disc, track or chapter.

7. “▶▶” button

   This button fast forwards a screen when the DVD player is operated.

8. “RETURN” button

   This button skips to the predetermined scene for the disc when the DVD player is operated.

9. “MENU” button

   This button indicates the menu screen for DVD video when the DVD player is operated.

10. “AUDIO” button

    This button indicates the changing audio screen when the DVD player is operated.

11. “SUB TITLE” button

    This button indicates the changing subtitle screen when the DVD player is operated.

12. “DISPLAY” button

    This button adjusts the color, tone, contrast and brightness of the screen.

13. “SET UP” button

    This button indicates the initial set up screen when the DVD player is operated.

14. “ANGLE” button

    This button selects the angle of the screen when the DVD player is operated.

15. “SEARCH” button

    This button indicates the title search screen when the DVD player is operated.

16. “TOP MENU” button

    This button indicates the title selection screen for DVD video when the DVD player is operated.

17. “❚❚” button

    This button pauses a screen when the DVD player is operated.

18. “◀◀” button

    This button reverses a screen when the DVD player is operated.

19. “▶” button

    This button plays a screen when the DVD player is operated.

20. “TUNE/TRACK” button

    This button seeks a radio station or selects track/chapter.

21. “CURSOR” button

    This button indicates the control switches on the screen when the DVD player is operated.

22. “VIDEO” button

    This button causes the display to use the video signal from an external video device.

▶Buttons on the DVD player unit

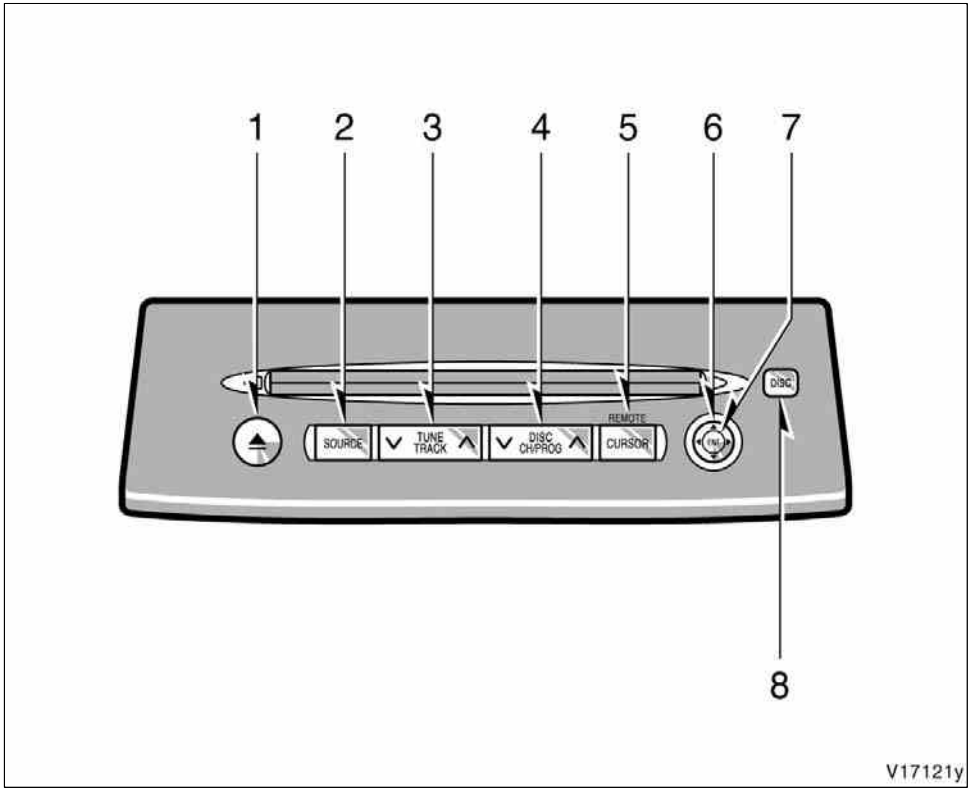

1. “⏏” button

   This button ejects a disc.

2. “SOURCE” button

   This button turns on the rear seat entertainment system and selects the mode.

3. “TUNE/TRACK” button

   This button seeks a radio station or selects track/chapter.

4. “DISC/CH/PROG” button

   This button skips directly to a desired preset station, disc, track or chapter.

5. “CURSOR (REMOTE)” button

   This button indicates the control switches on the screen when the DVD player is operated. This button also can be used when you lose sight of the controller.

6. Joystick

   This joystick selects a control switch, mode switch on the screen or the menu for the disc.

7. “ENT” button

   This button inputs the selected switch or the selected menu for the disc.

8. “DISC” indicator light

   This light indicates that the disc is loaded.

—Turning the rear seat entertainment system on and off

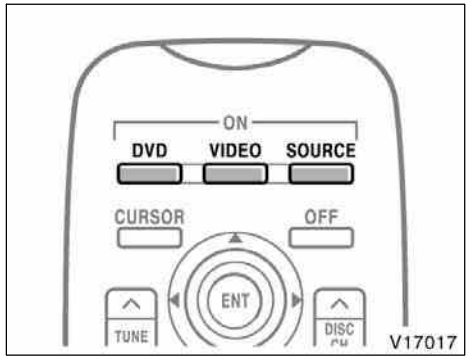

Controller

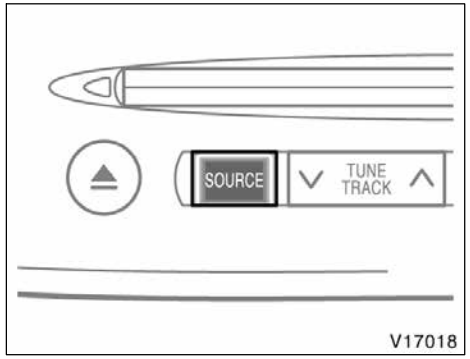

DVD player unit

To turn on the system, push the “SOURCE” button.

The screen indicates which mode can be selected. Push the “DVD” or “VIDEO” button when the connected DVD player or your personal audio machine is on. The rear seat entertainment system will be turned on.

The rear seat entertainment system can select all the modes.

When a cassette tape, a compact disc, a DVD video disc, an audio CD, a video CD, a CD text, a dts–CD or a DVD audio disc is not loaded on the front audio system or the DVD player, only the radio mode can be selected on the rear seat entertainment system.

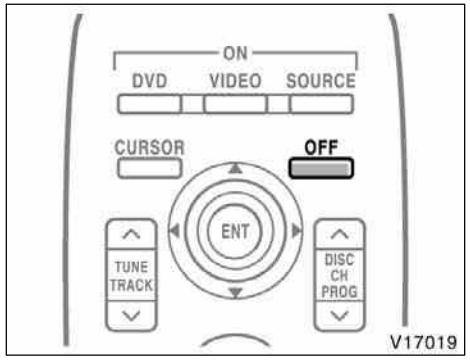

To turn off the system, push the “OFF” button.

When the front audio system is turned off, the rear audio system and the DVD player will be turned off simultaneously.

—Front audio system operation

All the modes of the front audio system can be operated on the rear seat entertainment system.

When the same mode is selected on the front and rear audio systems simultaneously, the system can be operated on the front audio system.

If the radio mode is selected on the front and rear audio systems at the same time, AM and FM modes cannot be changed on the rear seat audio system.

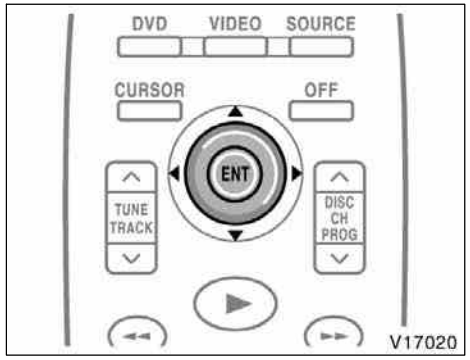

Controller

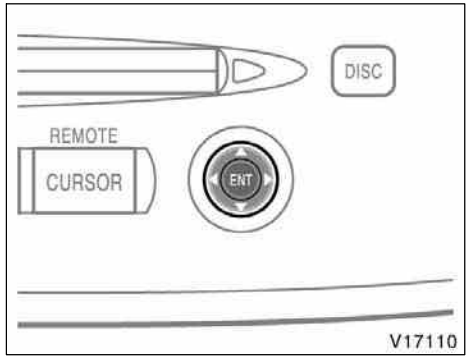

DVD player unit

SELECTING THE MODE

Use the joystick to select the mode. Push the “ENT” button to enter the mode.

The mode display which is selected by the joystick is colored blue. When the “ENT” button is pushed, the mode display changes to green. If the mode display is gray, it cannot be selected.

The “Speaker sound” on the mode display is selected on the front audio system.

Radio

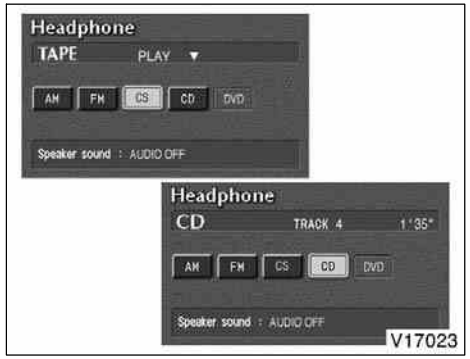

Cassette tape player and compact disc player

When you select a mode, the screen indicates which is selected.

Radio

AM mode:

When you select the AM mode, “AM” will appear on the screen.

FM mode:

When you select the FM mode, “FM1” or “FM2” will appear on the screen.

Tape mode

“TAPE” appears on the screen while this mode is selected.

Compact disc mode

“CD” appears on the screen while this mode is selected.

The screen shows the track, or track and disc number currently being played.

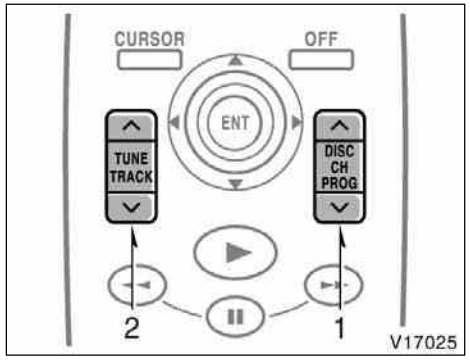

Controller

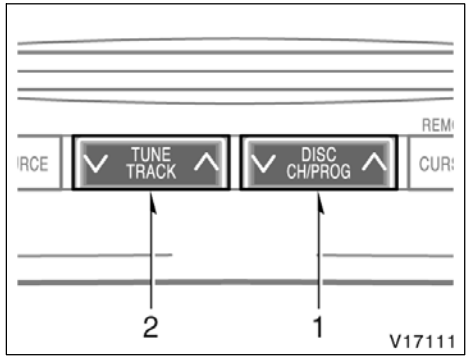

DVD player unit

OPERATING FRONT AUDIO SYSTEM

To operate the front audio system, use the following switches.

1. “DISC/CH/PROG” button

Radio

You can scan only the preset stations for the band of the front audio system. (For instructions, see “—Controls and features” on page 167 in this Section.)

To scan the preset stations:
Push the “∨” or “∧” side of the “DISC/CH/PROG” button. The radio will tune in the next preset station up or down the band. The station frequency will appear on the screen.

Cassette tape player

Push the “∨” or “∧” side of the “DISC/CH/PROG” button to select the other side of a cassette tape. The screen indicates which side is currently selected. (“▲” indicates the top side, “▼” indicates the bottom side.)

Auto–reverse feature: After the cassette player reaches the end of a tape side, it automatically reverses and begins to play the other side. This is true whether the cassette was playing or fast forwarding.

Compact disc player with changer

Use these buttons to select a disc you want to listen to.

Push the “∨” or “∧” side of the “DISC/CH/PROG” button until the number of the disc you want to listen appears on the display.

2. “TUNE/TRACK” button

Radio

Push the “∨” or “∧” side of the “TUNE/TRACK” button to tune or seek.

Tuning:

Quickly push and release the “∨” or “∧” side of the “TUNE/TRACK” button. Each time you push the button, the radio will step up or down to another frequency. If you push and hold the button, and the radio will go into the seek mode.

Seeking:

Push and hold the “∨” or “∧” side of the “TUNE/TRACK” button. The radio will seek up or down for a station of the nearest frequency and will stop on reception. Each time you push the button, the stations will be searched one after another.

Cassette tape player

To fast forward a cassette tape, push and hold the “∧” side of the “TUNE/TRACK” button until “FF” appears on the screen. Push and hold the “∨” side of the “TUNE/TRACK” button until “REW” appears on the screen to rewind a tape.

Use this button to skip up or down to locate a song or recording.

You can select up to nine recordings (including current one).

Push the “∨” or “∧” side of the “TUNE/TRACK” button. “FF 1” or “REW 1” will appear on the screen.

Next, push either side of the track button until the number on the screen reaches the number of tracks you want to skip. If you push the button 10 times, the skip feature will be turned off.

For the skip feature to work correctly a blank space of at least 3 seconds is considered to be a start of a recording.

When a beginning of a tape is reached, the player automatically resumes play.

When the end of the tape is reached, the player automatically reverses sides and resumes normal play.

In addition, the feature may not work well with some spoken, live, or classical recordings.

Compact disc player

Use this button to skip up or down to a different track.

Push the “∨” or “∧” side of the “TUNE/TRACK” button until the number of the track you want to listen to appears on the screen. If you want to return to the beginning of the current track, quickly push the “∨” side of the “TUNE/TRACK” button one time.

Push and hold the “∨” or “∧” side of the “TUNE/TRACK” button to fast forward or reverse within a compact disc. When you release the button, the compact disc player will resume playing.

REPLACING CONTROLLER BATTERY

For replacement, use 3 AAA batteries.

⚠ CAUTION

Special care should be taken to prevent small children from swallowing the removed battery or components.

NOTICE

- ***When replacing the battery, be careful not to lose the components.***
- ***Replace only with the same or equivalent type of battery recommended by a Toyota dealer.***
- ***Dispose of used batteries according to local regulations.***

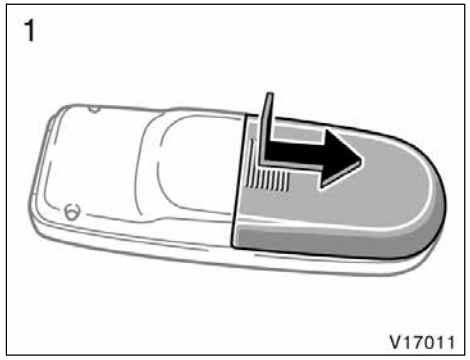

Replace the battery according to the following procedure:

1. Remove the cover of the controller as shown.

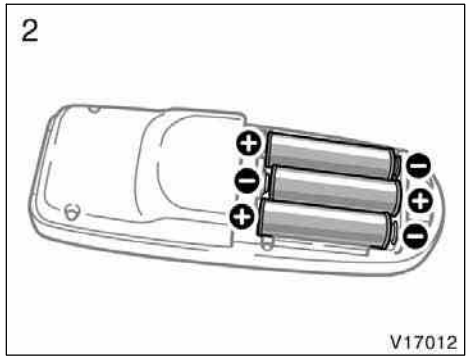

2. Remove the discharged batteries and put in the new batteries as shown. Install the cover.

NOTICE

- ***Be sure that the positive side and negative side of the controller battery should be faced correctly.***
- ***Do not replace the battery with wet hands. Water may cause rust.***
- ***Do not touch or move any components inside of the controller, or it may interfere with proper operation.***
- ***Be careful not to bend the electrode of the controller battery insertion.***
- ***Close the battery case securely.***

After replacing the battery, check that the controller operates properly. If the controller still does not operate properly, contact your Toyota dealer.

—DVD player

The DVD player can play audio CDs, DVD video discs, CD texts, dts–CDs and video CDs.

For appropriate discs for this player, see “Car audio/video system operating hints” on page 234 in this Section.

The DVD player works when the ignition key is in the “ACC” or “ON” position.

To turn on the DVD player, a disc must be loaded in the player.

To turn off the player, eject the disc.

Error messages

If the player malfunctions, your audio system will display one of the three following error messages.

If “DISC CHECK” appears on the screen: It indicates that the disc is dirty, damaged or it was inserted upside down. Clean the disc or insert it correctly.

If “REGION CODE ERROR” appears on the screen: It indicates that the DVD region code is not set properly.

If “DVD ERROR” appears on the screen: There is a problem inside the player. Eject the disc. Set the disc again.

If the malfunction still exists, take your vehicle to your Toyota dealer.

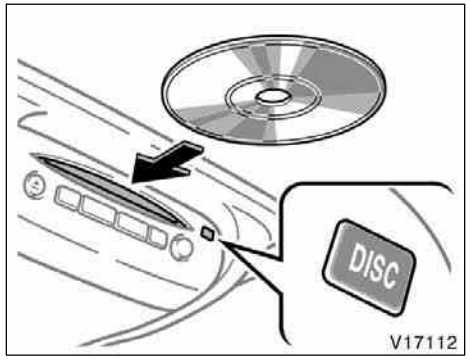

INSERTING THE DISC

Insert the compact disc into the slot with the label side up.

“DISC” indicator light turns on while the disc is loaded.

If the label faces down, the disc cannot be played. In this case, “DISC CHECK” and disc number appear on the screen.

If a disc which is not playable is inserted, “DISC CHECK” will also appear on the screen. For appropriate discs for this player, see “Car audio/video system operating hints” on page 234 in this Section.

The player will play the track or chapter, and it will play from the beginning of the track or chapter again after it reaches the end.

NOTICE
Never try to disassemble or oil any part of the DVD player. Do not insert anything other than a disc into the slot.

8 cm (3 in.) compact disc singles

Your compact disc player does not need an adaptor to play compact disc singles. Compact disc singles are about 8 cm (3 in.) in diameter–smaller than standard discs.

NOTICE
Do not use an adaptor for compact disc singles—it could cause tracking errors or interfere with the ejection of compact discs.

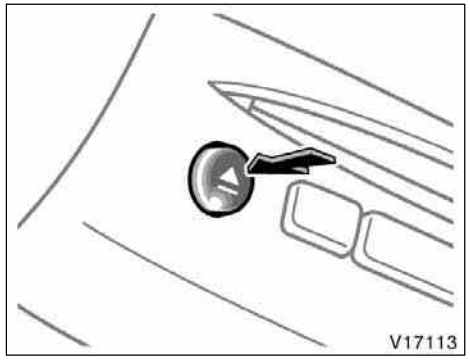

EJECTING THE DISC

Push the “⏏” button.

—Selecting the DVD mode

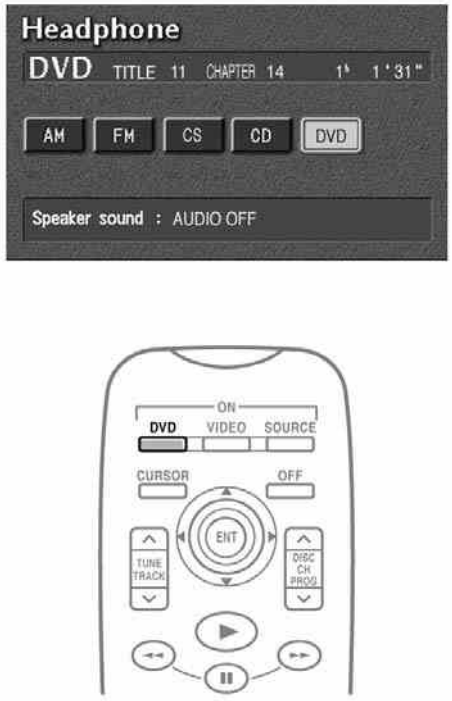

To select the DVD mode, push the “DVD” button on the controller.

You can also select the DVD mode on the mode selection screen mentioned above.

The “DVD Hint!” screen appears when the DVD mode is first selected after you turn the ignition key to the “ACC” or “ON” position.

Push the “OK” switch when you read the message.

—DVD player operation switches

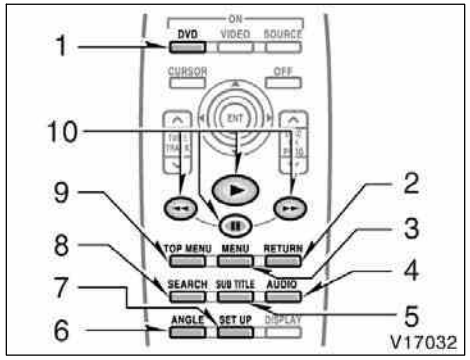

The DVD player can be operated with the controller buttons directly.

1. “DVD” button
2. “RETURN” button
3. “MENU” button
4. “AUDIO” button
5. “SUB TITLE” button
6. “ANGLE” button
7. “SET UP” button
8. “SEARCH” button
9. “TOP MENU” button
10. “❚❚”, “▶”, “◀◀” and “▶▶” buttons

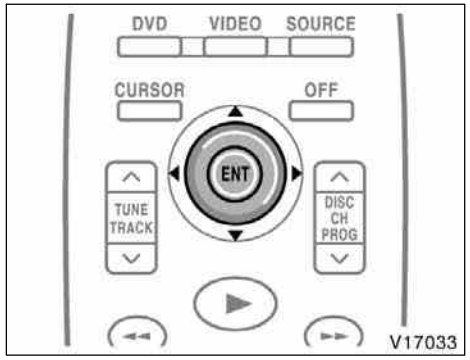

Controller

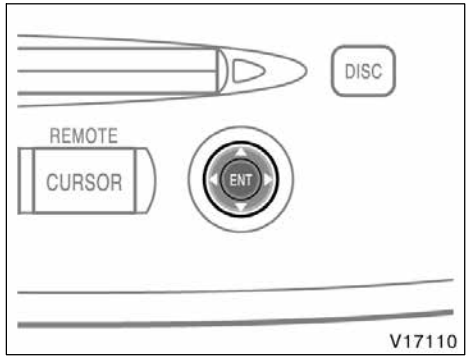

DVD player unit

The player can also be operated with the switches on the screen.

To operate the switches on the screen, select the switch by the joystick and push the “ENT” button. You cannot select the switches on the screen by touching them directly.

When the switch is selected by the joystick, the outline of the switch changes to blue. Push the “ENT” button, and the switch will be highlighted in green.

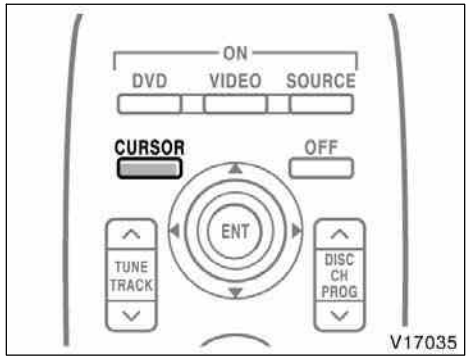

Controller

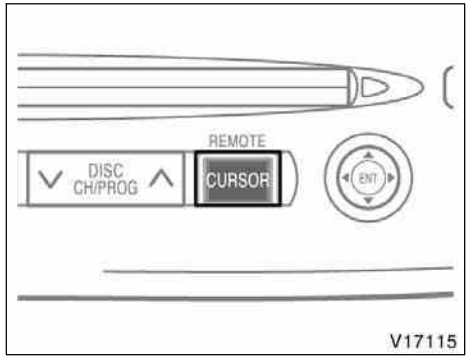

DVD player unit

TURNING THE OPERATION SWITCHES ON AND OFF

To turn on the operation switches, push the “CURSOR” button on the controller.

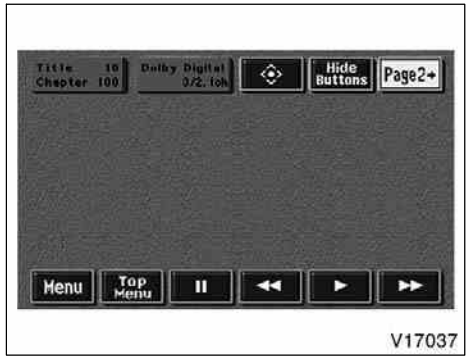

Page 1 (DVD video operation switch)

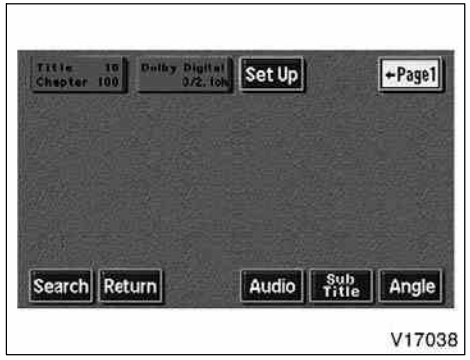

Page 2 (DVD video operation switch)

Page 1 (DVD audio operation switch)

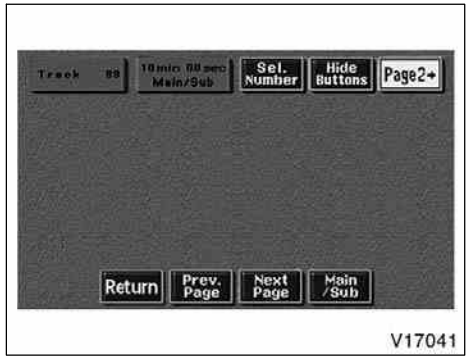

Page 1 (video CD)

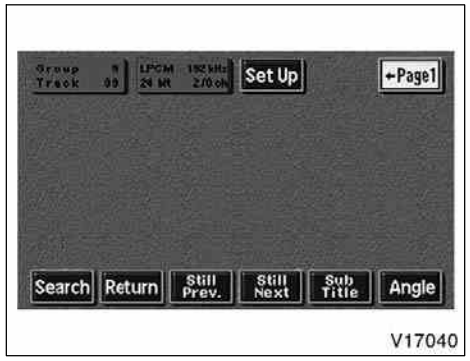

Page 2 (DVD audio operation switch)

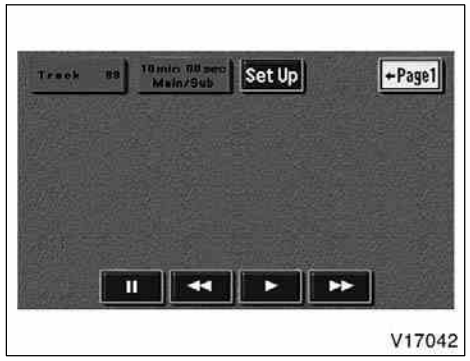

Page 2 (video CD)

There are operation switches on the “Page1” and “Page2” screens.

To change the screen, push the “Page1” or “Page2” switch on the screen.

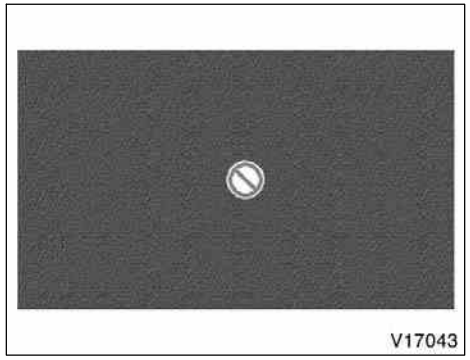

If “⃠” appears on the screen when you select a switch, it indicates that the switch cannot work.

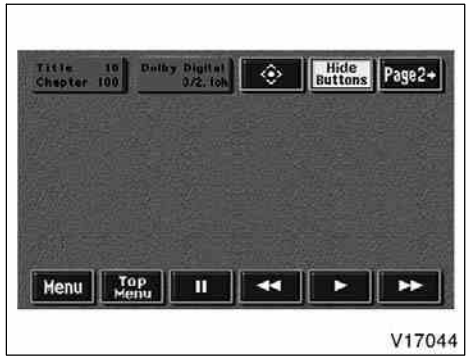

On the screen

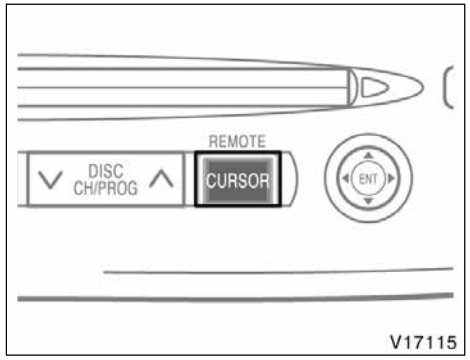

DVD player unit

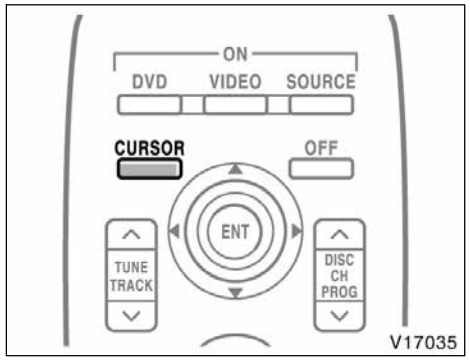

Controller

To turn off the switches on the screen, push the “CURSOR” button on the controller once again or push the “Hide Buttons” on the screen.

—DVD player operation (DVD video/DVD audio)

NOTE: The playback condition of some DVD video discs may be determined by the DVD video software producer. This DVD player plays discs as the software producer intended. Therefore, some functions may not work properly. Be sure to read the instruction manual for the DVD video disc separately provided. For detailed information about DVD video discs, see “—DVD video disc information” on page 230 in this Section.

Precautions for DVD video discs

When recording on a DVD video, DVD audio, video CD or audio tracks may not record in some cases while the menu is displayed. As audio will not play in this case, verify that the video tracks are playing and then activate playback.

The title/chapter number and playback time display may not appear while playing back certain DVD video discs.

⚠ CAUTION

Conversational speech on some DVDs is recorded at a low volume to emphasize the impact of sound effects. If you adjust the volume assuming that the conversations represent the maximum volume level available for the DVD, you may be startled by louder sound effects or when you change to a different audio source. Loud sounds may have a significant impact on the human body or pose a driving hazard. Keep this in mind when you adjust the volume.

DVD video

DVD audio

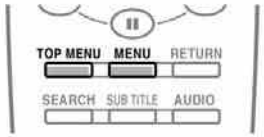

V17045

TURNING THE MENU SCREEN FOR THE DISC ON OR OFF

DVD video—

To turn on the menu screen for the disc, push the “Top Menu” or the “Menu” switch on the screen. You can also turn on the menu screen by pushing the “MENU” or “TOP MENU” switch on the controller.

DVD audio—

To turn on the menu screen for the disc, push the “Top Menu” switch on the screen. You can also turn on the menu screen by pushing the “TOP MENU” switch on the controller.

For the operation of the menu screen, see the separate manual for the DVD disc.

V17046

To turn on the selecting switch, push the “⊕” switch.

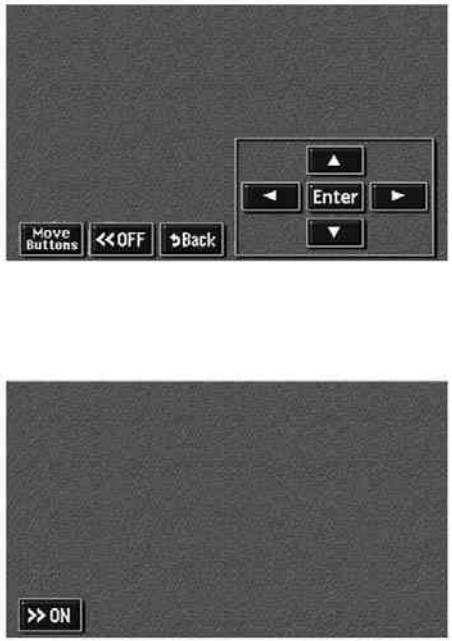

V17047

To select the menu for the disc, push the “◀”, “▲”, “▶” or “▼” switches on the screen. Push the “Enter” switch to select the menu for the disc.

You can also select the menu for the disc by the joystick and the “ENT” button on the controller when the control switches are not indicated on the screen.

Push the “Move Buttons” on the screen, and the switches (“◀”, “▲”, “▶”, “▼”, “Enter” and “Move Buttons” switches) will move up and down.

To turn off the switch, push the “OFF” switch on the screen. To turn on the switch again, push the “ON” switch on the screen.

To return to the previous screen, push the “Back” switch on the screen.

DVD video

DVD audio

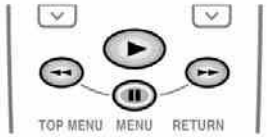

V17048

OPERATING THE “❚❚”, “▶”, “◀◀” AND “▶▶” SWITCHES/BUTTONS

“❚❚” switch/button: Push this switch/button to pause the disc.

“▶” switch/button: Push this switch/button to cancel the pause and return to normal playing.

“◀◀” and “▶▶” switches/buttons: Push and hold the “◀◀” or “▶▶” switch/button to fast forward or reverse. When you release the switch/button, the DVD player will resume playing.

DVD video only—

Push the “◀◀” or “▶▶” switch/button while pausing, the DVD video plays the slow–motion video replay or the slow–motion video replay in reverse.

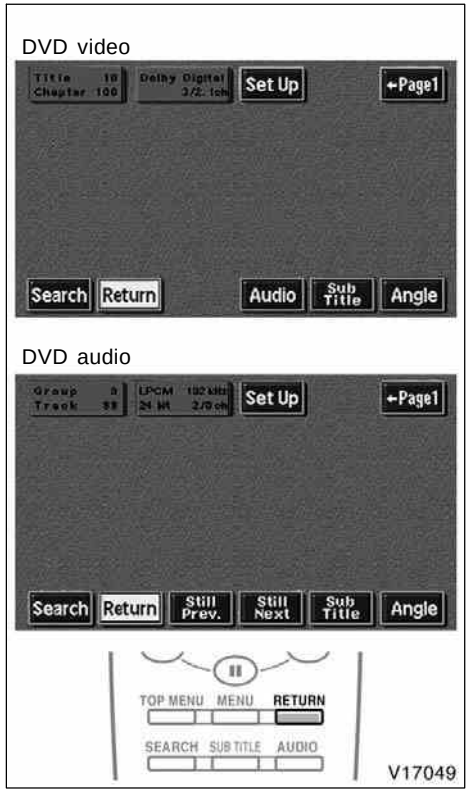

SKIPPING TO THE PREDETERMINED SCREEN

To skip to the predetermined screen, push the “Return” switch. The DVD player starts playing from the beginning of the predetermined screen. You can also display the screen by pushing the “RETURN” button on the controller.

For further details of the predetermined screen, see the separate manual for the DVD disc.

DVD video

DVD audio

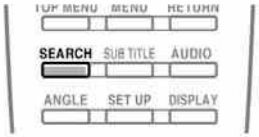

V17050

SELECTING THE TITLE/GROUP

To display the searching title (DVD video) or group (DVD audio) screen, push the “Search” switch on the screen. You can also display the screen by pushing the “SEARCH” button on the controller.

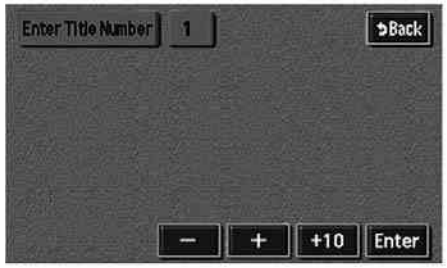

V17051

DVD video

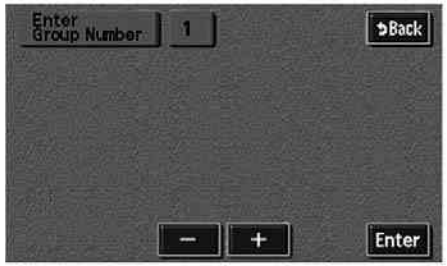

V17052

DVD audio

DVD video—

Select the title number by using the “–”, “+” and “+10” switches and push the “Enter” switch to enter the number. The player starts playing disc for that title number. The selected title number will appear on the screen.

Push the “Back” switch to return to the menu screen.

DVD audio—

Enter the group number by using the “–” and “+” switches. The selected group number will appear on the screen. Push the “Enter” switch. The player starts playing the disc from the entered group number.

Push the “Back” switch to return to the previous screen.

V17053

SELECTING THE BONUS GROUP

DVD audio only—

Enter the bonus group number on the searching group screen and push the “Enter” switch. The “Enter Key Code” screen will appear. To enter the number of the group you want to play, push the group number. If you enter the wrong number, push the “Clear” switch to delete the number.

Push the “Enter” switch on the screen. The player starts playing the disc from the selected bonus group number.

V17054

CHANGING THE STILL PICTURE

DVD audio only—

Push the “Still Prev.” or “Still Next” switch on the screen to forward or reverse the still pictures.

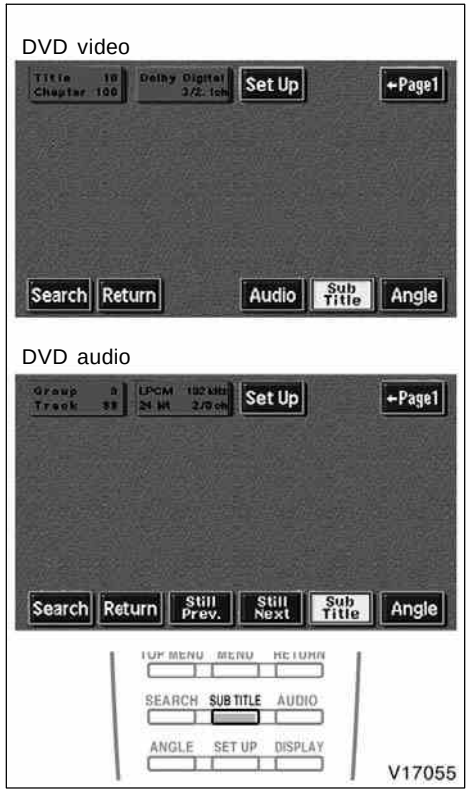

CHANGING THE SUBTITLE LANGUAGE

Push the “Sub Title” switch on the screen, and then the changing subtitle language screen will appear. You can also display the screen by pushing the “SUB TITLE” button on the controller.

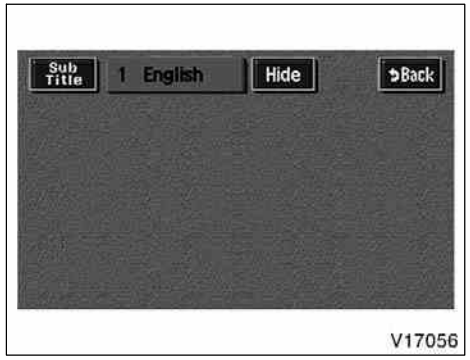

Each time you push the “Sub Title” switch, another language stored on the disc is selected.

To turn off the subtitles, push the “Hide” switch.

Push the “Back” switch to return to the previous screen.

The selected subtitle language will appear on the screen.

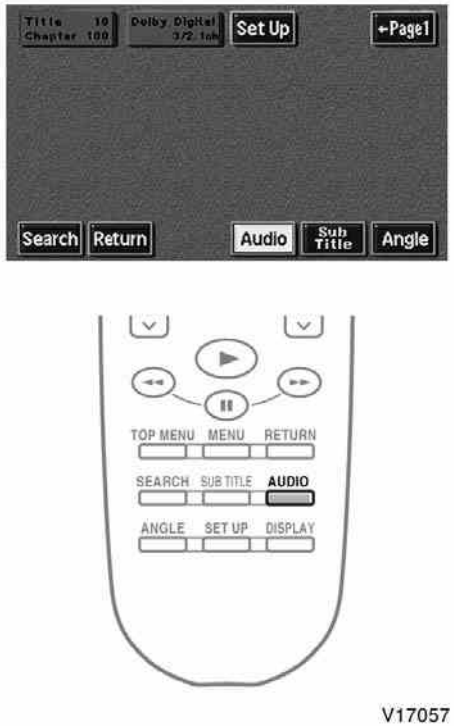

CHANGING AUDIO LANGUAGE (DVD video only)

Push the “Audio” switch on the screen and then the changing audio language screen will appear. You can also display the screen by pushing the “AUDIO” button on the controller.

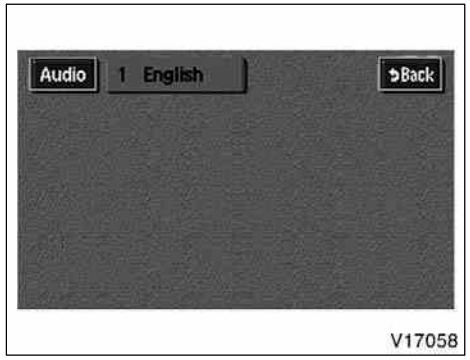

Each time you push the “Audio” switch, another language stored on the disc is selected.

The selected audio language will appear on the screen.

Push the “Back” switch to return to the previous screen.

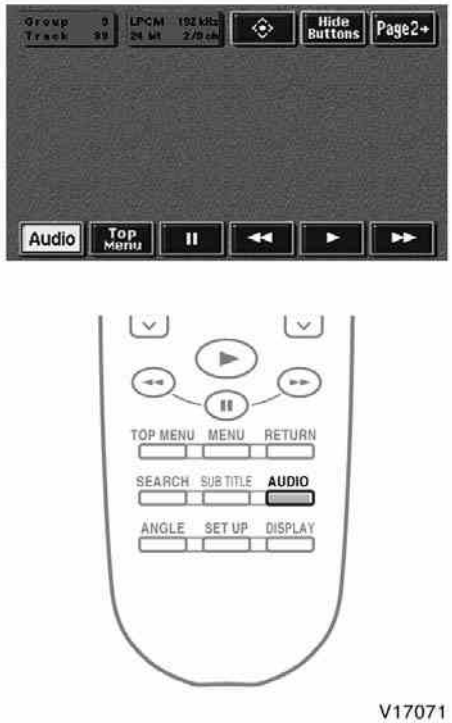

CHANGING AUDIO FORMAT (DVD audio only)

Push the “Audio” switch on the screen or the “AUDIO” button on the controller and the changing audio format screen will appear.

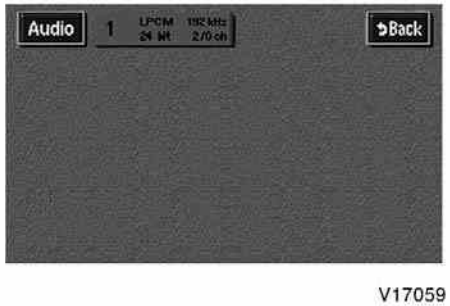

Each time you push the “Audio” switch, another audio format stored on the disc is selected.

Push the “Back” switch to return to the previous screen.

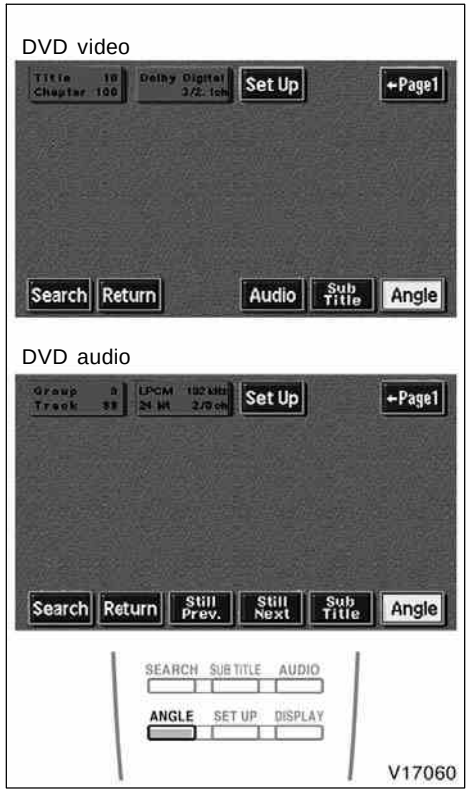

CHANGING ANGLE SCREEN

Push the “Angle” switch on the screen, and then the changing angle screen will appear. You can also display the screen by pushing the “ANGLE” button on the controller.

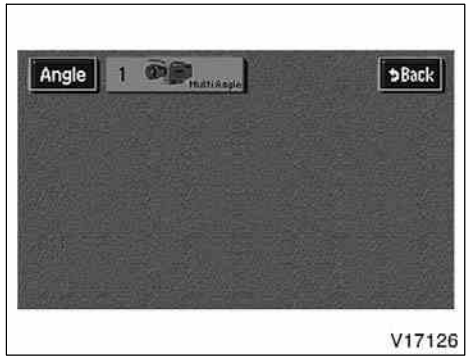

The angle can be selected for discs that are multi–angle compatible when the “ ” mark appears on the screen. Each time you push the “Angle” switch, the angle changes. The angle number which you can select will appear on the screen.

Push the “Back” switch to return to the previous screen.

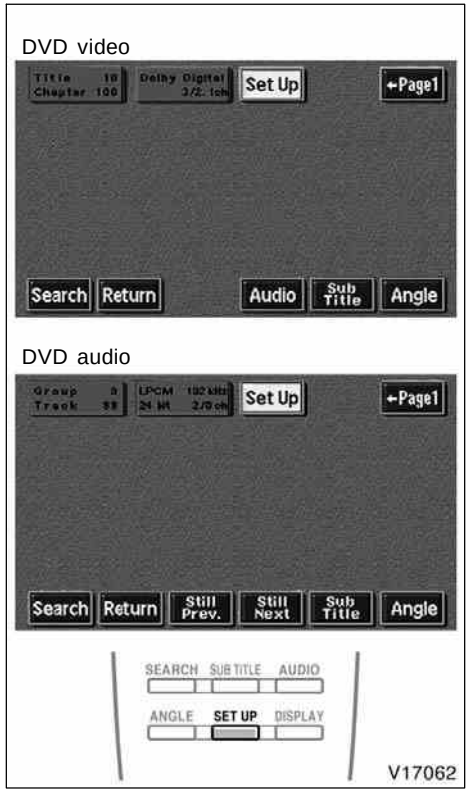

CHANGING THE INITIAL SETTING

Push the “Set Up” switch on the screen, and then the initial setting screen will appear. You can also display the screen by pushing the “SET UP” button on the controller. You can change the initial setting.

After the setting is done, the player plays from the beginning of the chapter or the track.

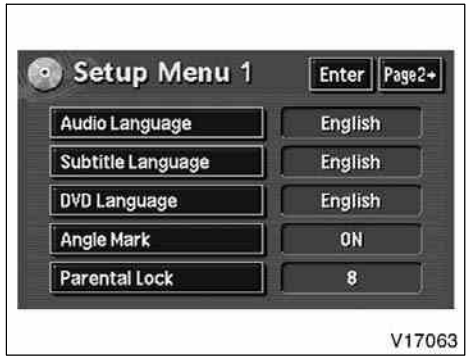

Setup Menu 1 screen

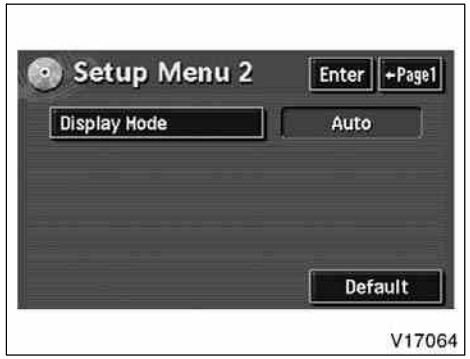

Setup Menu 2 screen

There are initial setting switches on the “Setup Menu 1” and “Setup Menu 2” screens.

To change the screen, push the “Page1” or “Page2” switch on the screen.

After you change the initial setting, push the “Enter” switch. The initial setting switch will be turned off and return to the picture previously.

When the “Default” switch on “Setup Menu 2” is pushed, all menus are initialized.

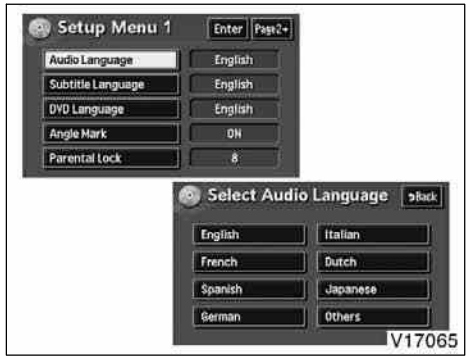

CHANGING THE AUDIO LANGUAGE

Push the “Audio Language” switch on the “Setup Menu 1” and the “Select Audio Language” screen appears.

Select the language you want to hear on the screen.

To return to the “Setup Menu 1” screen, push the “Back” switch.

If you cannot find a language you want to hear, push the “Others” switch. The “Enter Audio Lang. Code” screen will appear.

To enter the code of the language you want to hear, push the number of the language code. For details about the language codes, see the language code list. If you enter a wrong number, push the “Clear” switch to delete the number.

If numbers which are not on the list are entered and the “Enter” switch is pushed, the “Incorrect Code” screen will appear. Push the language code you want to hear again.

To return to the “Select Audio Language” screen, push the “Back” switch.

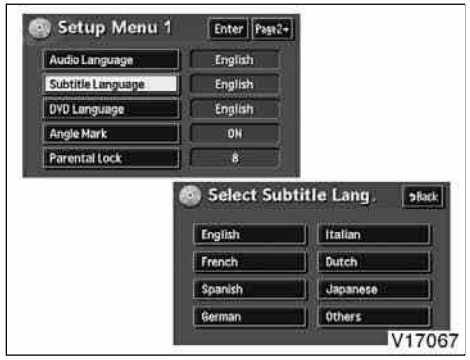

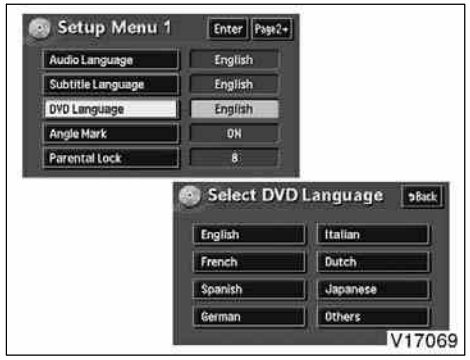

CHANGING THE SUBTITLE LANGUAGE

To display the “Select Subtitle Lang.”, push the “Subtitle Language” switch on the “Setup Menu 1” screen.

Select the language you want to read on the screen.

To return to the “Setup Menu 1” screen, push the “Back” switch.

If you cannot find a language you want to read, push the “Others” switch. The “Enter Subtitle Lang. Code” screen will appear.

To enter the code of the language you want to read, push the number of the language code. For details about the language codes, see the language code list. If you enter a wrong number, push the “Clear” switch to delete the number.

Push the “Enter” switch on the screen. If numbers which are not on the list are entered and the “Enter” switch is pushed, the “Incorrect code” screen will appear. Push the language code you want to read again.

To return to the “Select Subtitle Lang.” screen, push the “Back” switch on the screen.

CHANGING THE DVD LANGUAGE

To display the “Select DVD Language” screen, push the “DVD Language” switch on the “Setup Menu 1” screen.

Select the language you want to read on the screen.

To return to the “Setup Menu 1” screen, push the “Back” switch.

If you cannot find a language you want to read, push the “Others” switch. The “Enter DVD Language Code” screen will appear.

V17070

To enter the code of the language you want to read, push the number of the language code. For details about the language codes, see the language code list. If you enter a wrong number, push the “Clear” switch to delete the number.

Push the “Enter” switch on the screen. If numbers which are not on the list are entered and the “Enter” switch is pushed, the “Incorrect code” screen will appear. Push the language code you want to read again.

To return to the “Select DVD Language” screen, push the “Back” switch on the screen.

V17072

TURNING THE ANGLE MARK ON OR OFF

The angle mark can be turned on for discs that are multi–angle compatible.

Each time you push the “Angle Mark” switch on the screen, the angle mark turns on or off alternately.

V17073

SETTING LEVEL OF VIEWER RESTRICTIONS

You can restrict the play back screen by setting the viewer restrictions. You can prevent the restriction with a password. Some discs do not supply a restriction.

To set the level of viewer restriction, push the “Parental Lock” switch on the “Setup Menu 1” screen. The “Enter Personal Code” screen will appear.

Push the number for the password and the “Enter” switch. The “Select Restriction Level” screen will appear.

If you enter a wrong number, push the “Clear” switch to delete the number.

You cannot change the setting without inputting the password. When you forget or change the password, push the “Clear” switch ten times to initialize the password.

To return to the “Setup Menu 1” screen, push the “Back” switch.

Push a parental level (1—8). The smaller the level number, the stricter the age limit. Push the “Back” switch to return to the “Setup Menu 1” screen.

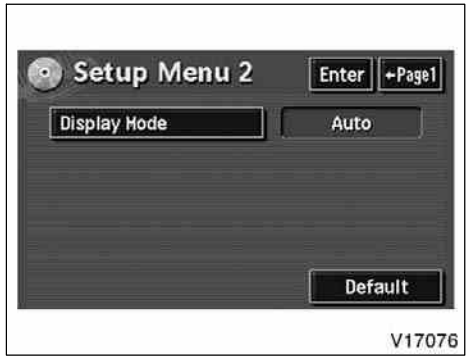

SETTING THE DISPLAY MODE

Each time you push the “Display Mode” switch on the “Setup Menu 2” screen, the display mode is changed from wide mode to auto mode.

LANGUAGE CODE LIST

Code	Language
1001	Japanese
0514	English
0618	French
0405	German
0920	Italian
0519	Spanish
2608	Chinese
1412	Dutch
1620	Portuguese
1922	Swedish
1821	Russian
1115	Korean
0512	Greek
0101	Afar
0102	Abkhazian
0106	Afrikaans
0113	Amharic
0118	Arabic
0119	Assamese

0125	Aymara
0126	Azerbaijani
0201	Bashkir
0205	Byelorussian
0207	Bulgarian
0208	Bihari
0209	Bislama
0214	Bengali
0215	Tibetan
0218	Breton
0301	Catalan
0315	Corsican
0319	Czech
0325	Welsh
0401	Danish
0426	Bhutani
0515	Esperanto
0520	Estonian
0521	Basque
0601	Persian
0609	Finnish

0610	Fiji
0615	Faroese
0625	Frisian
0701	Irish
0704	Scots–Gaelic
0712	Galician
0714	Guarani
0721	Gujarati
0801	Hausa
0809	Hindi
0818	Croatian
0821	Hungarian
0825	Armenian
0901	Interlingua
0905	Interlingue
0911	Inupiak
0914	Indonesian
0919	Icelandic
0923	Hebrew
1009	Yiddish
1023	Javanese

1101	Georgian
1111	Kazakh
1112	Greenlandic
1113	Cambodian
1114	Kannada
1119	Kashmiri
1121	Kurdish
1125	Kirghiz
1201	Latin
1214	Lingala
1215	Laothian
1220	Lithuanian
1222	Latvian
1307	Malagasy
1309	Maori
1311	Macedonian
1312	Malayalam
1314	Mongolian
1315	Moldavian
1318	Marathi
1319	Malay

1320	Maltese
1325	Burmese
1401	Nauru
1405	Nepali
1415	Norwegian
1503	Occitan
1513	(Afan) Oromo
1518	Oriya
1601	Punjabi
1612	Polish
1619	Pashto, Pushto
1721	Quechua
1813	Rhaeto–Romance
1814	Kirundi
1815	Romanian
1823	Kinyarwanda
1901	Sanskrit
1904	Sindhi
1907	Sangho
1908	Serbo–Croatian
1909	Sinhalese

1911	Slovak
1912	Slovenian
1913	Samoan
1914	Shona
1915	Somali
1917	Albanian
1918	Serbian
1919	Siswati
1920	Sesotho
1921	Sundanese
1923	Swahili
2001	Tamil
2005	Telugu
2007	Tajik
2008	Thai
2009	Tigrinya
2011	Turkmen
2012	Tagalog
2014	Setswana
2015	Tonga
2018	Turkish

2019	Tsonga
2020	Tatar
2023	Twi
2111	Ukrainian
2118	Urdu
2126	Uzbek
2209	Vietnamese
2215	Volapük
2315	Wolof
2408	Xhosa
2515	Yoruba
2621	Zulu

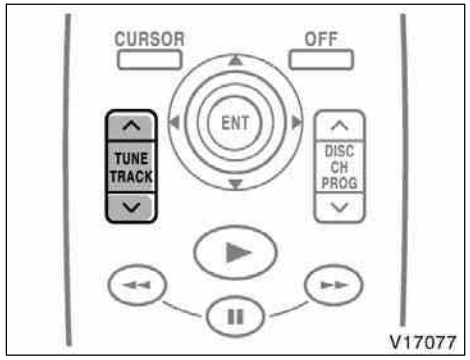

SELECTING THE CHAPTER/TRACK

To select the chapter/track, push the “∨” or “∧” side of the (TUNE/TRACK) button on the controller until the number of the chapter/track you want to select appears on the screen.

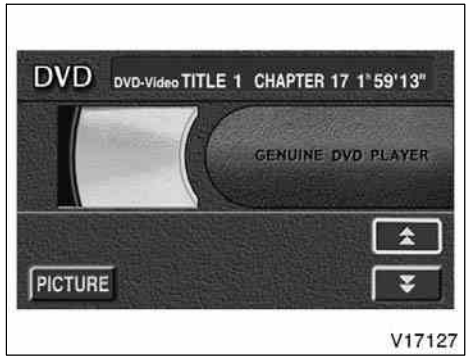

DVD video

DVD audio

USING THE CONTROL SCREEN

When playing a disc, push the “DVD” button on the controller. The control screen will appear on the screen.

Details of the specific switches, controls and features are described below.

1. “PICTURE” switch

   Push the “PICTURE” switch to turn off the control screen and return to the picture previously displayed.

2. “RPT” switch (DVD audio only)

   Push the “RPT” switch while the track is playing. When the track ends, it will automatically replay. To turn off the repeat feature, push this switch again.

3. “RAND” switch (DVD audio only)

   Push the “RAND” switch. The player will play the tracks on the disc in random order. To turn off the random feature, push this switch again.

4. “SCAN” switch (DVD audio only)

   Push the “SCAN” switch. The player will scan all the tracks on the disc you are listening to. To stop scanning, push this switch again. If the player has scanned all the tracks on the disc, it will stop scanning.

5. “⏶” and “⏷” switches

   Push and hold the “⏶” or “⏷” switch to fast forward or reverse a disc. When you release the switch, the DVD player will resume playing.

—DVD player operation (video CD/audio CD/CD text)

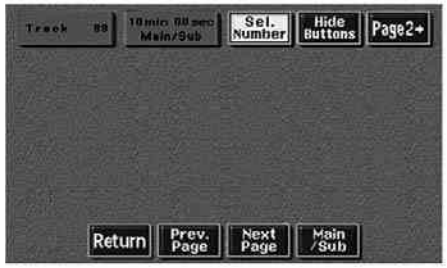

V17080

SELECTING THE DISC MENU NUMBER (video CD only)

Push the “Sel. Number” switch and then the disc menu number search screen will appear. You can also display the screen by pushing the “SEARCH” switch on the controller.

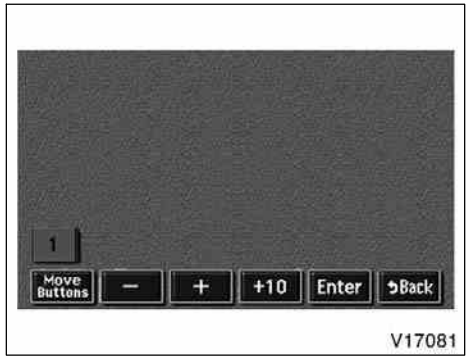

Enter the disc menu number by using the “–”, “+” and “+10” switches and push the “Enter” switch. The player starts playing the disc from the entered disc menu number. The entered disc menu number will appear on the screen.

Push the “Back” switch to return to the menu screen.

Move up and down the switches by pushing the “Move Buttons” on the screen.

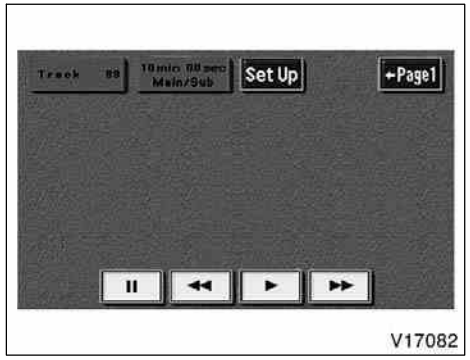

OPERATING THE “❚❚”, “▶”, “◀◀” AND “▶▶” SWITCHES

“❚❚” switch: Push this switch to pause the disc.

“▶” switch: Push this switch to cancel the pause and return to normal playing.

“◀◀” and “▶▶” switches: Push and hold the “◀◀” or “▶▶” switch to fast forward or reverse. When you release the switch, the DVD player will resume playing.

Video CD only—

Push the “▶▶” switch/button while pausing, the video CD plays the slow–motion video replay.

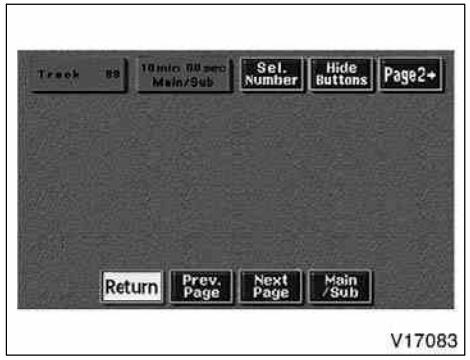

TURNING ON THE DISC MENU (video CD only)

Push the “Return” switch to turn on the menu screen for the disc. You can also turn on the menu screen by pushing the “RETURN” button on the controller.

For the operation of the menu screen, see the manual for the video CD.

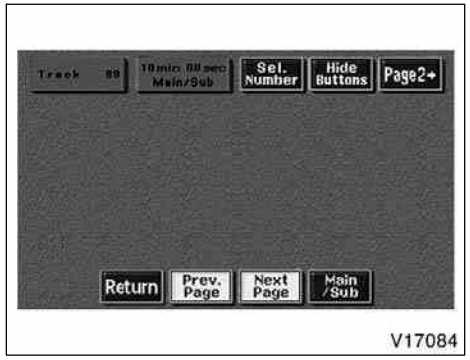

CHANGING MENU PAGE OR TRACK (video CD only)

Push the “Prev. Page” or “Next Page” switch while the disc menu is displayed. The next or previous page will appear on the screen.

Push the “Prev. Page” or “Next Page” switch while the player is playing video. The next or previous track will be searched and played.

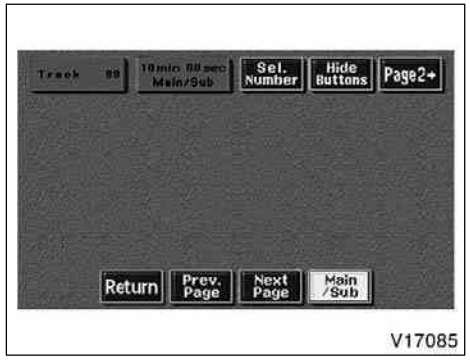

CHANGING A MULTIPLEX TRANSMISSION (video CD only)

Push the “Main/Sub” switch to change a multiplex transmission. The mode changes from Main/Sub to Main to Sub and back to Main/Sub by pushing the “Main/Sub” switch.

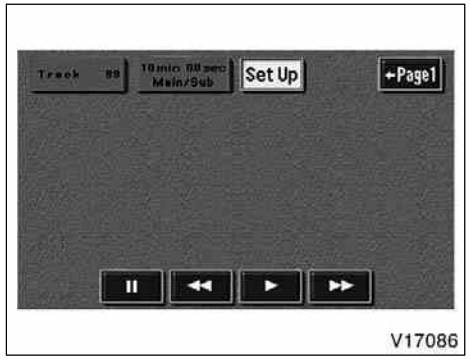

CHANGING THE INITIAL SETTING (video CD only)

Push the “Set Up” switch on the screen and then the initial setting screen will appear. You can also display the screen by pushing the “SET UP” button on the controller. You can change the initial setting. (See “CHANGING THE INITIAL SETTING” on page 216 in this Section for details.)

After the setting is done, the player plays from the beginning of the chapter or the track.

Video CD

CD Text

Audio CD

USING THE CONTROL SCREEN

When playing a disc, push the “DVD” button on the controller. The control screen will appear on the screen.

CD text only—

The disc title and track title will appear on the screen when pushing the “DVD” button.

Details of the specific switches, controls and features are described below.

1. “PICTURE” switch (video CD only)

   Push the “PICTURE” switch to turn off the control screen and return to the picture previously displayed.

2. “RPT” switch (audio CD and CD text)

   Push the “RPT” switch while the track is playing. When the track ends, it will automatically replay. To turn off the repeat feature, push this switch again.

3. “RAND” switch (audio CD and CD text)

   Push the “RAND” switch. The player will play the tracks on the disc in random order. To turn off the random feature, push this switch again.

4. “SCAN” switch (audio CD and CD text)

   Push the “SCAN” switch. The player will scan all the tracks on the disc. To stop scanning, push this switch again. When the player has scanned all the tracks on the disc, it will stop scanning.

5. “⏶” and “⏷” switches

   Push the “⏶” or “⏷” switch to fast forward or reverse the disc. When you push the switch again, the DVD player will resume playing.

—Screen adjustment

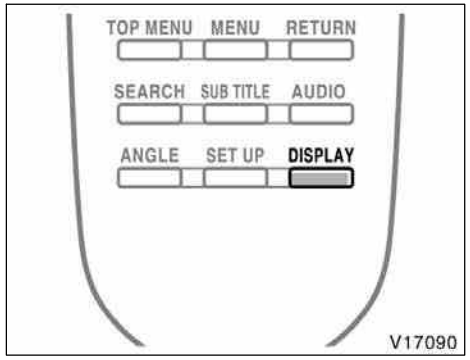

You can adjust the color, contrast, tone and brightness of the screen.

Push the “DISPLAY” switch on the controller and then the “Display” screen will appear.

The screen may turn purple to deflect the sunlight. This is not a malfunction.

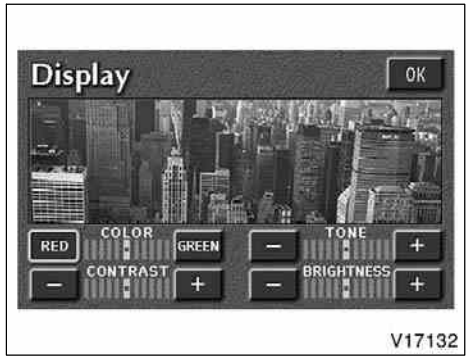

Each time you push the “+” or “–” switch, you can adjust the color, contrast, tone and brightness of the screen.

	+ or “GREEN”	– or “RED”
COLOR	Strengthens the green color	Strengthens the red color
CONTRAST	Strengthens the contrast	Weakens the contrast
TONE	Strengthens the tone	Weakens the tone
BRIGHTNESS	Brightens	Darkens

After adjusting the screen, push the “OK” switch to return to the previous screen.

—Selecting the video mode

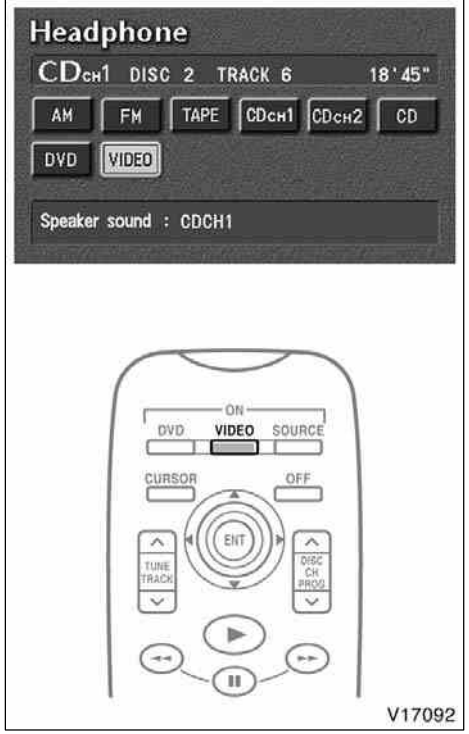

The audio machine connected to the input terminal adapter can be played in the video mode.

To select the video mode, push the “VIDEO” button on the controller. You can also select the video mode on the mode selection screen mentioned above.

—DVD video disc information

DVD PLAYER AND DVD VIDEO DISCS

This DVD player conforms to NTSC color TV formats. DVD video discs conforming to other formats such as PAL or SECAM cannot be used.

Region codes: Some DVD video discs have a region code indicating where you can use. If the DVD video disc is not labeled “ALL” or “1”, you cannot use it in this DVD player. If you attempt to play an inappropriate DVD video disc in this player, “REGION CODE ERROR” appears on the screen. Even if the DVD video disc does not have a region code, in some cases you cannot use it.

Marks shown on DVD video discs:

NTSC	Indicates NTSC format of color TV.
2	Indicates the number of audio tracks.
2	Indicates the number of language subtitles.
3	Indicates the number of angles.
16:9 LB 4:3	Indicates the screen to be selected. Wide screen: 16:9 Standard: 4:3
ALL 1	Indicates regions in which this video disc can be played. ALL: all countries Number: region code

DVD VIDEO DISC GLOSSARY

DVD video discs: Digital Versatile Disc that holds video. DVD video discs have adopted “MPEG2”, one of the world standards of digital compression technologies. The picture data is compressed by 1/40 on average and stored. Variable rate encoded technology in which the volume of data assigned to the picture is changed depending on the picture format has also been adopted. Audio data is stored using PCM and Dolby digital, which enables higher quality of sound. Furthermore, multi–angle and multi–language features will also help you enjoy the more advanced technology of DVD video.

Viewer restrictions: This feature limits what can be viewed in conformity with the level of restrictions of the country. The level of restrictions varies depending on the DVD video disc. Some DVD video discs cannot be played at all, or violent scenes are skipped or replaced with other scenes.

Level 1: DVD video discs for children can be played.

Level 2—7: DVD video discs for children and G–rated movies can be played.

Level 8: All types of DVD video discs can be played.

Multi–angle feature: You can enjoy the same scene at different angles.

Multi–language feature: You can select the language of the subtitles and audio.

Region codes: Region codes are provided on DVD players and DVD discs. If the DVD video disc does not have the same region code as the DVD player, you cannot play the disc on the DVD player. For region codes, see page 230.

Audio: This DVD player can play liner PCM, Dolby digital, dts and MPEG audio format DVD. Other decoded type cannot be played.

Title and chapter: Video and audio programs stored on DVD video discs are divided in parts by title and chapter.

Title: The largest unit of the video and audio programs stored on DVD video discs. Usually, one piece of a movie, one album, or one audio program is assigned as a title.

Chapter: A unit smaller than a title. A title comprises plural chapters.

Manufactured under license from Dolby Laboratories. “Dolby”, “Pro Logic”, and the double–D symbol are trademarks of Dolby Laboratories. Confidential unpublished works.
©1992–1997 Dolby Laboratories. All rights reserved.

This product incorporates copyright protection technology that is protected by method claims of certain U.S. patents and other intellectual property rights owned by Macrovision Corporation and other rights owners. Use of this copyright protection technology must be authorized by Macrovision Corporation, and is intended for home and other limited viewing uses only unless otherwise authorized by Macrovision Corporation. Reverse engineering or disassembly is prohibited.

“dts” is a trademark of Digital Theater Systems, Inc.

—Input terminal adapter

The rear entertainment system plays videos and sound when your audio system is connected to the input terminal adapter. For details, refer to the manufacturer’s instructions.

—Power outlet (115 VAC)

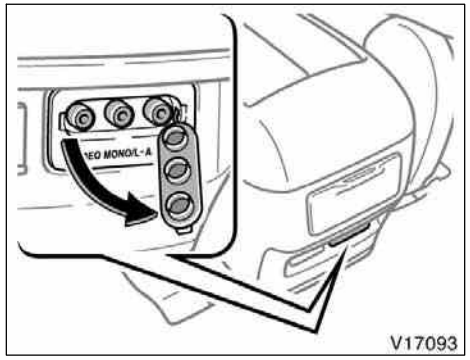

To use the input terminal adapter, open the cover.

The input terminal adapter is composed of 3 input terminal adapters.

Yellow: Image input adapter
Red: Audio input adapter
White: Audio input adapter

NOTICE

Close the input terminal adapter cover when the input terminal adapter is not in use. Inserting a foreign object other than the appropriate plug that fits the adapter may cause electrical failure or short circuit.

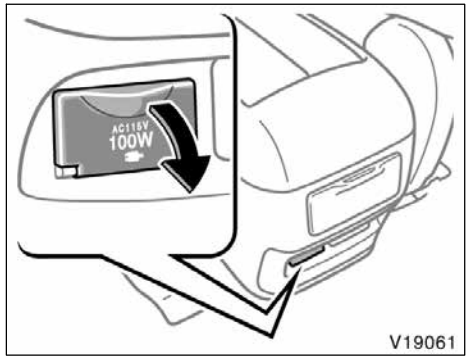

This power outlet is designed for use as a power supply for the audio device connected to the input terminal adapter.

The key must be in the “ON” position for the power outlet to be used.

The maximum capacity for this power outlet is 115 VAC/100W. If you attempt to use an appliance that requires more than 115 VAC or 100W, the protection circuit will activate and cut the power supply. The power supply will restart automatically when you use an appliance that operates within the 115 VAC/100W limits.

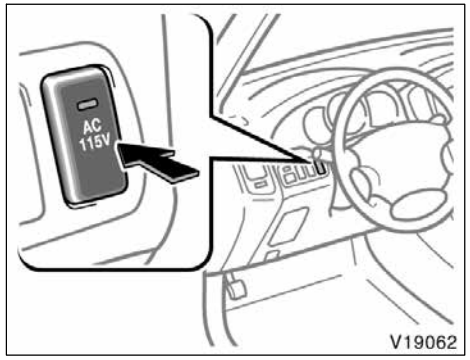

Main switch

To use the power outlet, push the main switch on the instrument panel.

An indicator light will illuminate to indicate that the power outlet is ready for use.

Push the main switch once again to turn the power outlet off. When the power outlet is not in use, make sure that the main switch is turned off.

NOTICE

- ***To prevent the battery from being discharged, do not use the power outlet longer than necessary when the engine is not running.***
- ***Close the power outlet lid when the power outlet is not in use. Inserting a foreign object other than the appropriate plug that fits the outlet may cause electrical failure or short circuit.***

The power outlet is not designed for the following electric appliances even if their power consumption is under 115 VAC/100W. These appliances may not operate properly.

- Appliances with high initial peak wattage: cathode–ray tube type televisions, compressor–driven refrigerators, electric pumps, electric tools, etc.
- Measuring devices which process precise data: medical equipment, measuring instruments, etc.
- Other appliances requiring an extremely stable power supply: microcomputer–controlled electric blankets, touch sensor lamps, etc.

Certain electrical appliances may cause radio noise.

—Headphone input jacks

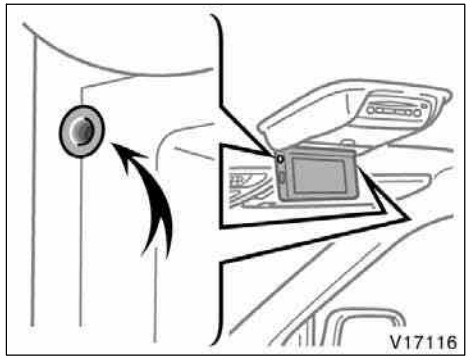

You can enjoy the rear seat entertainment system with commercial headphones.

To use the headphones, connect them to the jack.

The key must be in the “ACC” or “ON” position.

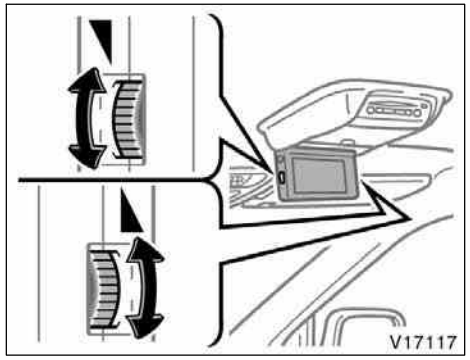

To adjust the volume of the headphones, turn the dial.

Left side dial: Turn it upward to increase the volume, turn it downward to decrease the volume.

Right side dial: Turn it downward to increase the volume, turn it upward to decrease the volume.

The maximum volume depends on the type of headphones.

The recommended headphone impedance is from 16 Ω to 32 Ω.

Please contact your Toyota dealer for further details.

⚠ CAUTION

Adjust the volume when you connect the headphones to the jack. Loud sounds may have a significant impact on the human body.

Car audio/video system operating hints

NOTICE

To ensure correct audio/video system operation:

- ***Be careful not to spill beverages over the system.***
- ***Do not put anything other than a cassette tape or Compact Disc into the slot.***
- ***Do not put anything other than a DVD video, DVD audio, video CD, dts–CD and audio CD into the DVD player.***
- ***The use of a cellular phone inside or near the vehicle may cause a noise from the speakers of the system which you are listening to. However, this does not indicate a malfunction.***

RADIO RECEPTION

Usually, a problem with radio reception does not mean there is a problem with your radio—it is just the normal result of conditions outside the vehicle.

For example, nearby buildings and terrain can interfere with FM reception. Power lines or telephone wires can interfere with AM signals. And of course, radio signals have a limited range. The farther you are from a station, the weaker its signal will be. In addition, reception conditions change constantly as your vehicle moves.

Here are some common reception problems that probably do not indicate a problem with your radio:

FM

Fading and drifting stations—Generally, the effective range of FM is about 40 km (25 miles). Once outside this range, you may notice fading and drifting, which increase with the distance from the radio transmitter. They are often accompanied by distortion.

Multi–path—FM signals are reflective, making it possible for two signals to reach your antenna at the same time. If this happens, the signals will cancel each other out, causing a momentary flutter or loss of reception.

Static and fluttering—These occur when signals are blocked by buildings, trees, or other large objects. Increasing the bass level may reduce static and fluttering.

Station swapping—If the FM signal you are listening to is interrupted or weakened, and there is another strong station nearby on the FM band, your radio may tune in the second station until the original signal can be picked up again.

AM

Fading—AM broadcasts are reflected by the upper atmosphere—especially at night. These reflected signals can interfere with those received directly from the radio station, causing the radio station to sound alternately strong and weak.

Station interference—When a reflected signal and a signal received directly from a radio station are very nearly the same frequency, they can interfere with each other, making it difficult to hear the broadcast.

Static—AM is easily affected by external sources of electrical noise, such as high tension power lines, lightening, or electrical motors. This results in static.

CARING FOR YOUR CASSETTE PLAYER AND TAPES

For the best performance for your cassette player and tapes:

Clean the tape head and other parts regularly.

- A dirty tape head or tape path can decrease sound quality and tangle your cassette tapes. The easiest way to clean them is by using a cleaning tape. (A wet type is recommended.)

Use high–quality cassettes.

- Low–quality cassette tapes can cause many problems, including poor sound, inconsistent playing speed, and constant auto–reversing. They can also get stuck or tangled in the cassette player.
- Do not use a cassette if it has been damaged or tangled or if its label is peeling off.
- Do not leave a cassette in the player if you are not listening to it, especially if it is hot outside.
- Store cassettes in their cases and out of direct sunlight.

- Avoid using cassettes with a total playing time longer than 100 minutes (50 minutes per side). The tape used in these cassettes is thin and could get stuck or tangled in the cassette player.

CARING FOR YOUR COMPACT DISC PLAYER, DVD PLAYER AND DISCS

- Extremely high temperatures can keep your compact disc player and DVD player from working. On hot days, use the air conditioning to cool the vehicle interior before you use the players.
- Bumpy roads or other vibrations may make your compact disc player and DVD player skip.
- If moisture gets into your compact disc player and DVD player, the players may not play even though they appear to be working. Remove the disc from the player and wait until it dries.

⚠ CAUTION

Compact disc players and DVD players use an invisible laser beam which could cause hazardous radiation exposure if directed outside the unit. Be sure to operate the players correctly.

Compact disc player

- Use only compact discs marked as shown above. The following products may not be playable on your compact disc player.

  SACD
  dts–CD
  Copy–protected CD
  CD–R (CD–Recordable)
  CD–RW (CD–Re–writable)
  CD–ROM

Audio CDs	COMPACT disc DIGITAL AUDIO / COMPACT disc DIGITAL AUDIO TEXT / dts
DVD video discs	DVD VIDEO / DVD VIDEO
DVD audio discs	DVD AUDIO
Video CDs	VIDEO CD / COMPACT disc DIGITAL VIDEO

DVD player

- Use only discs marked as shown above. The following products may not be playable on your DVD player.

  SACD
  Copy–protected CD
  CD–R (CD–Recordable)
  CD–RW (CD–Re–writable)
  CD–ROM
  DVD–R
  DVD+R
  DVD+RW
  DVD–RW
  DVD–ROM
  DVD–RAM

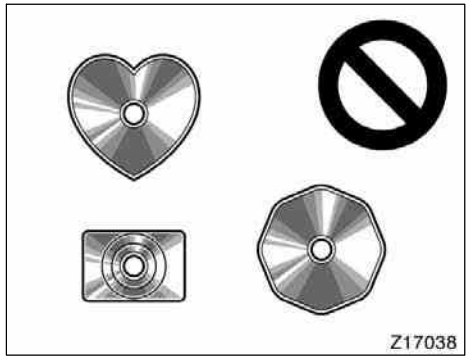

Special shaped discs

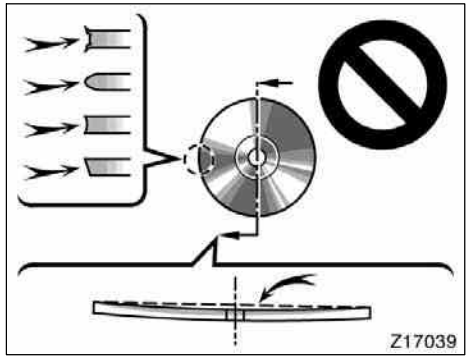

Low quality discs

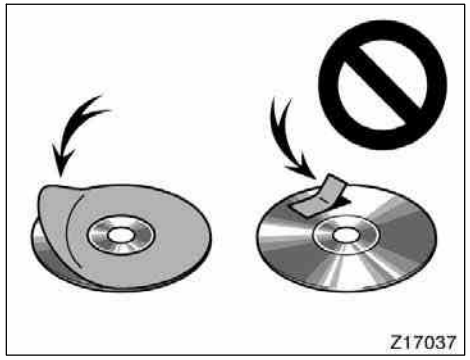

Labeled discs

NOTICE
To prevent damage to the player or changer, do not use special shaped, low quality or labeled discs such as those shown in the illustrations.

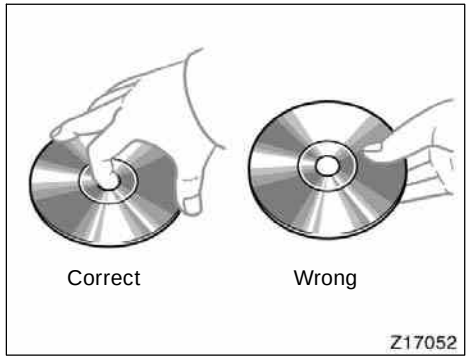

- Handle compact discs carefully, especially when you are inserting them. Hold them on the edge and do not bend them. Avoid getting fingerprints on them, particularly on the shiny side.
- Dirt, scrapes, warping, pin holes, or other disc damage could cause the player to skip or to repeat a section of a track. (To see a pin hole, hold the disc up to the light.)
- Remove discs from the compact disc player when you are not listening to them. Store them in their plastic cases away from moisture, heat, and direct sunlight.

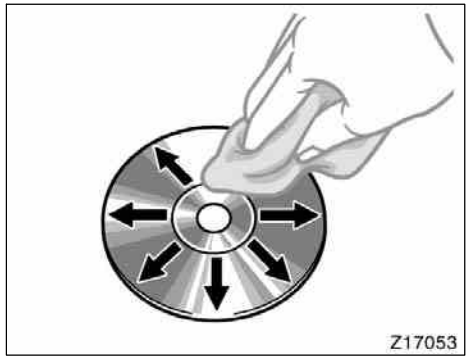

To clean a compact disc: Wipe it with a soft, lint–free cloth that has been dampened with water. Wipe in a straight line from the center to the edge of the disc (not in circles). Dry it with another soft, lint–free cloth. Do not use a conventional record cleaner or anti–static device.

SECTION 1 – 9

OPERATION OF INSTRUMENTS AND CONTROLS

Air conditioning system

Front manual air conditioning system
Controls 240
Air flow selector settings 243
Operating tips 243
Front automatic air conditioning system
Controls 246
Air flow selector settings 249
Operating tips 249
Side vents 252
Rear heater system 253
Checking and replacing the air conditioning filter 254

For information about the front air conditioning system of a vehicle equipped with Navigation system, please refer to the separate “Navigation System Owner’s Manual”.

Front manual air conditioning system——Controls

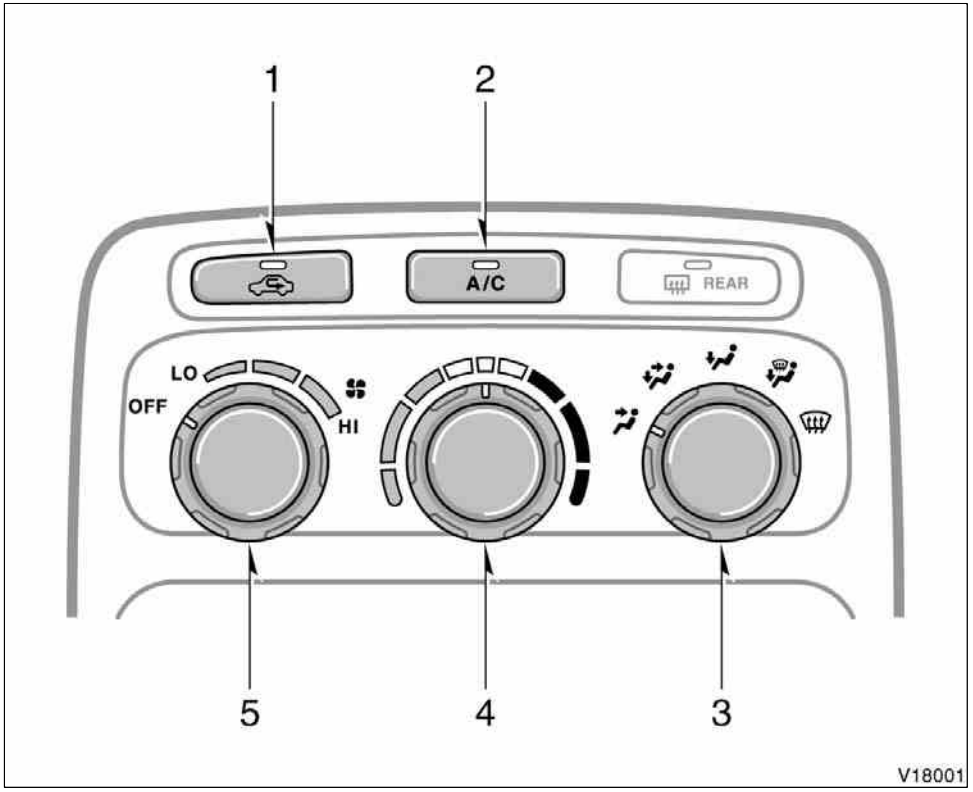

1. Air intake selector
2. “A/C” button
3. Air flow selector
4. Temperature selector
5. Fan speed selector

Fan speed selector

Turn the knob to adjust the fan speed—to the right to increase, to the left to decrease.

Temperature selector

Turn the knob to adjust the temperature—to the right to warm, to the left to cool.

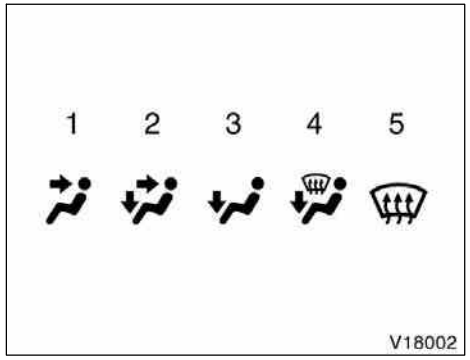

Air flow selector

Turn the knob to select the vents used for air flow.

1. **Panel—**Air flows mainly from the instrument panel vents.
2. **Bi–level—**Air flows from both the floor vents and the instrument panel vents.
3. **Floor—**Air flows mainly from the floor vents.
4. **Floor/Windshield—**Air flows mainly from the floor vents and windshield vents.

   Turning the air flow selector to the floor/windshield position turns on the defogging function with the purpose of clearing the front view.

   This position allows the air intake to select FRESH automatically. This is to clean up the front view more quickly.

   If you want to return the setting to RECIRCULATE mode, press the air intake selector button once again.
5. **Windshield—**Air flows mainly from the windshield vents.

   Turning the air flow selector to the windshield position turns on the defogging function with the purpose of clearing the front view.

   This position allows the air intake to select FRESH automatically. This is to clean up the front view more quickly.

   If you want to return the setting to RECIRCULATE mode, press the air intake selector button once again.

For details about air flow selector settings, see “—Air flow selector settings” described blow.

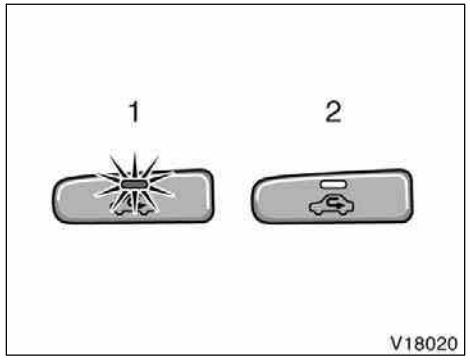

Air intake selector

Press the button to select the air source.

1. **Recirculate—**Recirculates the air inside the vehicle.
2. **Fresh—**Draws outside air into the system.

To prevent fogging up of the windshield, the air intake mode may change automatically to FRESH depending on the condition of the air conditioning system.

“A/C” button

To turn on the air conditioning, press the “A/C” button. The “A/C” button indicator will come on. To turn the air conditioning off, press the button again.

If the “A/C” button indicator flashes, there is a problem in the air conditioning system and the air conditioning automatically shuts off. If this happens, take your vehicle to a Toyota dealer for service.

—Air flow selector settings

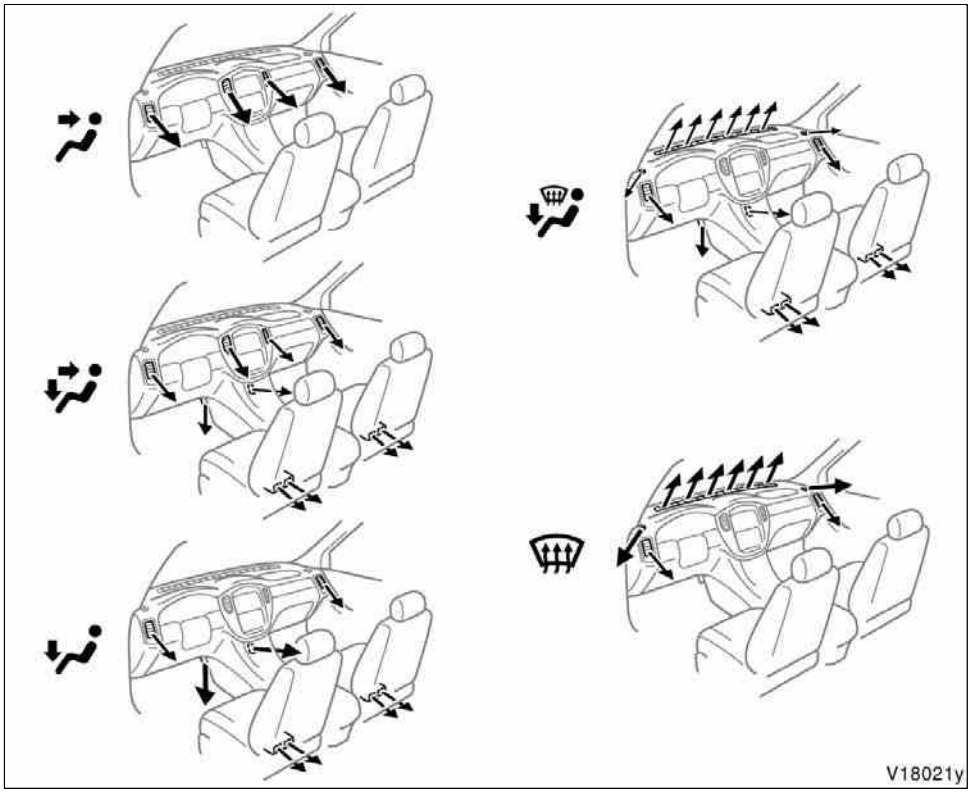

—Operating tips

- To cool off your Toyota after it has been parked in the hot sun, drive with the windows open for a few minutes. This vents the hot air, allowing the air conditioning to cool the interior more quickly.
- Make sure the air intake grilles in front of the windshield are not blocked (by leaves or snow, for example).
- On humid days, do not blow cold air on the windshield. The windshield could fog up because of the difference in air temperature on the inside and outside of the windshield.
- Keep the area under the front seats clear to allow air to circulate throughout the vehicle.
- On cold days, set the fan speed to high for a minute to help clear the intake ducts of snow or moisture. This can reduce the amount of fogging on the windows.
- When driving on dusty roads, close all windows. If dust thrown up by the vehicle is still drawn into the vehicle after closing the windows, it is recommended that the air intake selector be set to FRESH and the fan speed selector to any setting except “OFF”.

- If following another vehicle on a dusty road, or driving in windy and dusty conditions, it is recommended that the air intake selector be temporarily set to RECIRCULATE, which will close off the outside passage and prevent outside air and dust from entering the vehicle interior.

Heating

For best results, set controls to:

Fan speed—Any setting except “OFF”
Temperature—Towards **WARM** (red zone)
Air intake—FRESH (outside air)
Air flow—FLOOR
Air conditioning—OFF

- For quick heating, select recirculated air for a few minutes. To keep the windows from fogging, select fresh after the vehicle interior has been warmed.
- Press the “A/C” button on for dehumidified heating.
- Choose floor/windshield air flow to heat the vehicle interior while defrosting or defogging the windshield.

Air conditioning

For best results, set controls to:

Fan speed—Any setting except “OFF”
Temperature—Towards **COLD** (blue zone)
Air intake—FRESH (outside air)
Air flow—PANEL
Air conditioning—ON

- For quick cooling, select recirculated air for a few minutes.

Ventilation

For best results, set controls to:

Fan speed—Any setting except “OFF”
Temperature—Towards **COLD** (blue zone)
Air intake—FRESH (outside air)
Air flow—PANEL
Air conditioning—OFF

Defogging

The inside of the windshield

For best results, set controls to:

Fan speed—	Any setting except “OFF”
Temperature—	Towards **WARM** (red zone) to heat; **COLD** (blue zone) to cool
Air intake—FRESH (outside air)	
Air flow—WINDSHIELD	

Turning the air flow selector to the windshield or floor/windshield position turns on the defogging function with the purpose of clearing the front view.

When turning the air flow selector to windshield or floor/windshield position, the air intake selects FRESH automatically. This is to clean up the front view more quickly.

If you want to return the setting to RECIRCULATE mode, press the air intake selector button once again.

- On humid days, do not blow cold air on the windshield—the difference between the outside and inside temperatures could make the fogging worse.

Defrosting

The outside of the windshield

For best results, set controls to:

Fan speed—	Any setting except “OFF”
Temperature—	Towards **WARM** (red zone)
Air intake—FRESH (outside air)	
Air flow—WINDSHIELD	

Turning the air flow selector to the windshield or floor/windshield position turns on the defrosting function with the purpose of clearing the front view.

When turning the air flow selector to windshield or floor/windshield position, the air intake selects FRESH automatically. This is to clean up the front view more quickly.

If you want to return the setting to RECIRCULATE mode, press the air intake selector button once again.

- To heat the vehicle interior while defrosting the windshield, choose floor/windshield air flow.

Front automatic air conditioning system——Controls

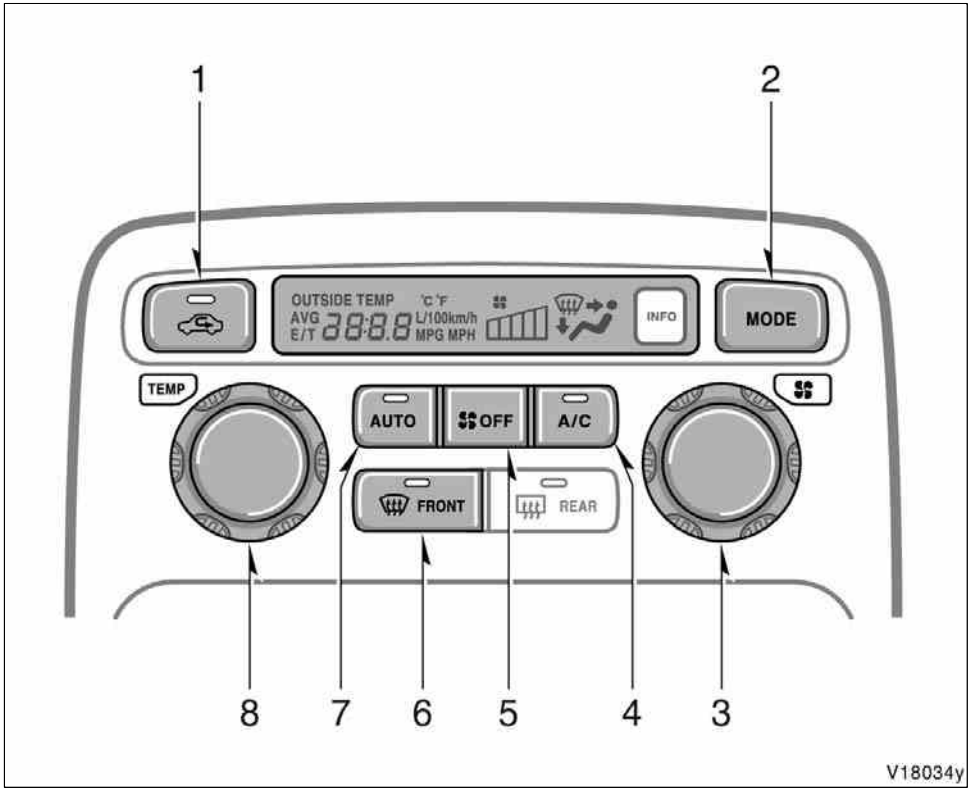

1. Air intake selector
2. “MODE” button (air flow selector)
3. Fan speed selector
4. “A/C” button
5. “OFF” button
6. Windshield air flow button
7. “AUTO” button
8. Temperature selector

“AUTO” button

For automatic operation of the air conditioning, press the “AUTO” button. An indicator light will illuminate to show that the automatic operation mode has been selected.

In the automatic operation mode, the air conditioning selects the most suitable fan speed, air flow, air intake and on–off of the air conditioning according to the temperature.

You may use manual controls if you want to select your own settings.

Fan speed selector

Turn the knob to adjust the fan speed—to the right to increase, to the left to decrease.

In automatic operation, you do not have to adjust the fan speed unless you desire another fan speed mode.

Temperature selector

Turn the knob to adjust the temperature—to the right to warm, to the left to cool.

“OFF” button

Push the button to turn off the air conditioning system.

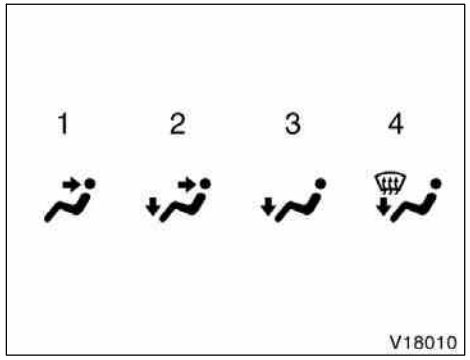

“MODE” button (air flow selector)

Push the “MODE” button to select the vents used for air flow.

In automatic operation, you do not have to select the air flow unless you desire another air flow mode.

1. **Panel—**Air flows mainly from the instrument panel vents.
2. **Bi–level—**Air flows from both the floor vents and the instrument panel vents.
3. **Floor—**Air flows mainly from the floor vents.
4. **Floor/Windshield—**Air flows mainly from the floor vents and windshield vents.

Windshield air flow button

When this button is pressed, air flows mainly from the windshield vents and the FRESH mode is automatically set. This setting clears the front view more quickly.

If you want to return the setting to RECIRCULATE mode, press the air intake selector button once again.

Pressing the button once again returns the air flow mode to the last one used.

Pressing the windshield air flow button turns on the defroster–linked air conditioning. This is to clean up the front view more quickly.

When the “A/C” button is not pressed in, pressing another air flow button turns off the air conditioning.

For details about air flow selector settings, see “—Air flow selector settings” described below.

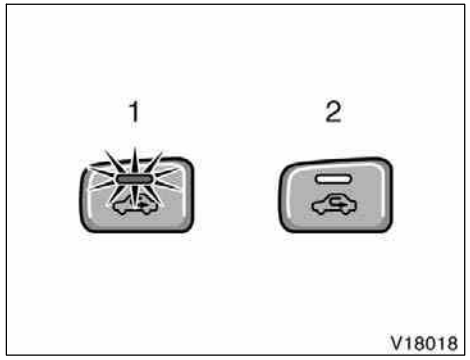

Air intake selector

Press the button to select the air source.

1. **Recirculate—**Recirculates the air inside the vehicle.
2. **Fresh—**Draws outside air into the system.

If the engine coolant temperature becomes extremely high, RECIRCULATE mode will automatically be selected. This is not a malfunction. When the engine coolant temperature is lowered, the previous mode will resume.

To prevent fogging up of the windshield, the air intake mode may change automatically to FRESH depending on the condition of the air conditioning system.

“A/C” button

To turn on the air conditioning, press the “A/C” button. The “A/C” button indicator will come on. To turn the air conditioning off, press the button again.

If the “A/C” button indicator flashes, there is a problem in the air conditioning system and the air conditioning automatically shuts off. If this happens, take your vehicle to a Toyota dealer for service.

—Air flow selector settings

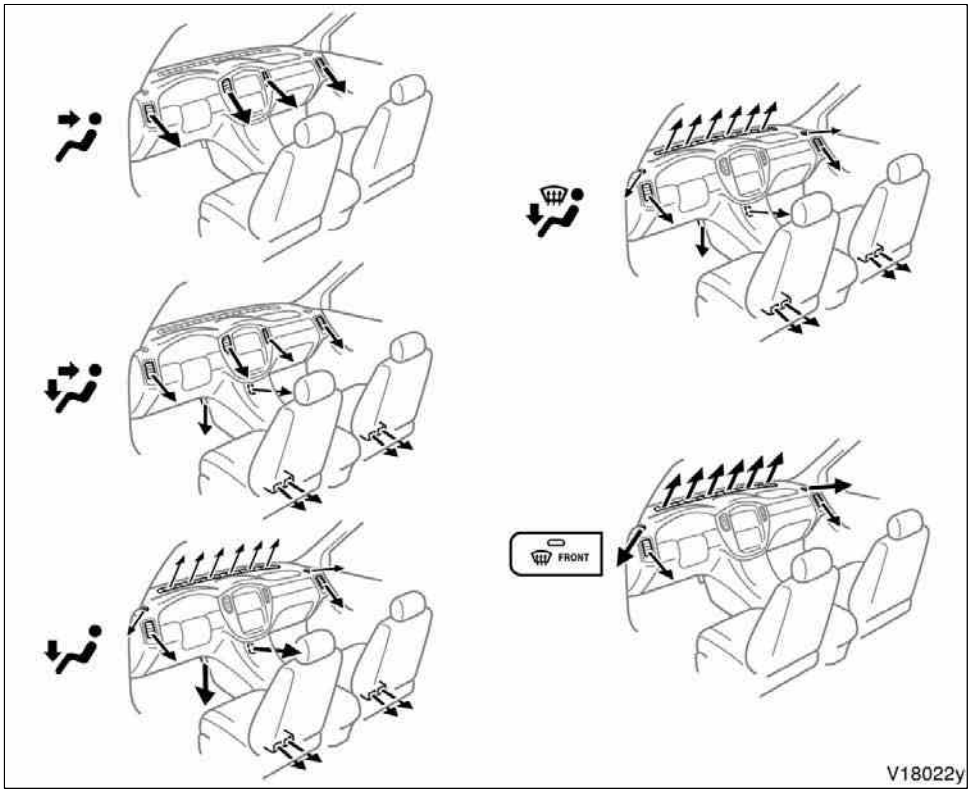

—Operating tips

- To cool off your Toyota after it has been parked in the hot sun, drive with the windows open for a few minutes. This vents the hot air, allowing the air conditioning to cool the interior more quickly.
- Make sure the air intake grilles in front of the windshield are not blocked (by leaves or snow, for example).
- On humid days, do not blow cold air on the windshield. The windshield could fog up because of the difference in air temperature on the inside and outside of the windshield.
- Keep the area under the front seats clear to allow air to circulate throughout the vehicle.
- On cold days, set the fan speed to high for a minute to help clear the intake ducts of snow or moisture. This can reduce the amount of fogging on the windows.
- When driving on dusty roads, close all windows. If dust thrown up by the vehicle is still drawn into the vehicle after closing the windows, it is recommended that the air intake selector be set to FRESH and the fan speed selector to any setting except “OFF”.

- If following another vehicle on a dusty road, or driving in windy and dusty conditions, it is recommended that the air intake selector be temporarily set to RECIRCULATE, which will close off the outside passage and prevent outside air and dust from entering the vehicle interior.

Heating

For best results, set controls to:

For automatic operation—

Press in the “AUTO” button.
Temperature—To the desired temperature
Air intake—FRESH (outside air)
Air conditioning—OFF

For manual operation—

Fan speed—To the desired fan speed
Temperature—Towards **WARM** (to the right)
Air intake—FRESH (outside air)
Air flow—FLOOR
Air conditioning—OFF

- For quick heating, select recirculated air for a few minutes. To keep the windows from fogging, select fresh after the vehicle interior has been warmed.
- Press the “A/C” button on for dehumidified heating.
- Choose floor/windshield air flow to heat the vehicle interior while defrosting or defogging the windshield.

Air conditioning

For best results, set controls to:

For automatic operation—

Press in the “AUTO” button.
Temperature—To the desired temperature
Air intake—FRESH (outside air)
Air conditioning—ON

For manual operation—

Fan speed—To the desired fan speed
Temperature—Towards **COLD** (to the left)
Air intake—FRESH (outside air)
Air flow—PANEL
Air conditioning—ON

- For quick cooling, select recirculated air for a few minutes.

Ventilation

For best results, set controls to:

For automatic operation—

Press in the “AUTO” button.
Temperature—Towards **COLD** (to the left)
Air intake—FRESH (outside air)
Air conditioning—OFF

For manual operation—

Fan speed—To the desired fan speed
Temperature—Towards **COLD** (to the left)
Air intake—FRESH (outside air)
Air flow—PANEL
Air conditioning—OFF

Defogging and defrosting—

—The inside of the windshield

For best results, set controls to:

For automatic operation—

Temperature—Towards **WARM** (to the right) to heat; **COLD** (to the left) to cool
Air intake—FRESH (outside air)
Air flow—WINDSHIELD

For manual operation—

Fan speed—To the desired fan speed
Temperature—Towards **WARM** (to the right) to heat; **COLD** (to the left) to cool
Air intake—FRESH (outside air)
Air flow—WINDSHIELD

When pressing the windshield air flow button, the air intake selects FRESH automatically. This is to clean up the front view more quickly.

If you want to return the setting to RECIRCULATE mode, press the air intake selector button once again.

Pressing the windshield button turns on the defroster–linked air conditioning. This is to clean up the front view more quickly.

When the “A/C” button is not pressed in, pressing another air flow button turns off the air conditioning.

- On humid days, do not blow cold air on the windshield—the difference between the outside and inside temperatures could make the fogging worse.

—The outside of the windshield

For best results, set controls to:

For automatic operation—

Temperature—Towards **WARM** (to the right)
Air intake—FRESH (outside air)
Air flow—WINDSHIELD

For manual operation—

Fan speed—To the desired fan speed **Temperature—**Towards **WARM** (to the right) **Air intake—FRESH** (outside air) **Air flow—WINDSHIELD**

When pressing the windshield air flow button, the air intake selects FRESH automatically. This is to clean up the front view more quickly.

If you want to return the setting to RECIRCULATE mode, press the air intake selector button once again.

Pressing the windshield button turns on the defroster–linked air conditioning. This is to clean up the front view more quickly.

When the “A/C” button is not pressed in, pressing another air flow button turns off the air conditioning.

- To heat the vehicle interior while defrosting the windshield, choose floor/windshield air flow.

Side vents

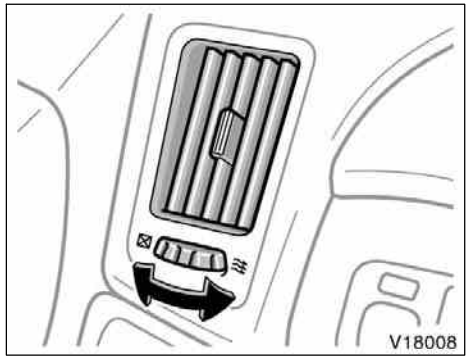

If air flow control is not satisfactory, check the side vents. The side vents may be opened or closed as shown.

Rear heater system

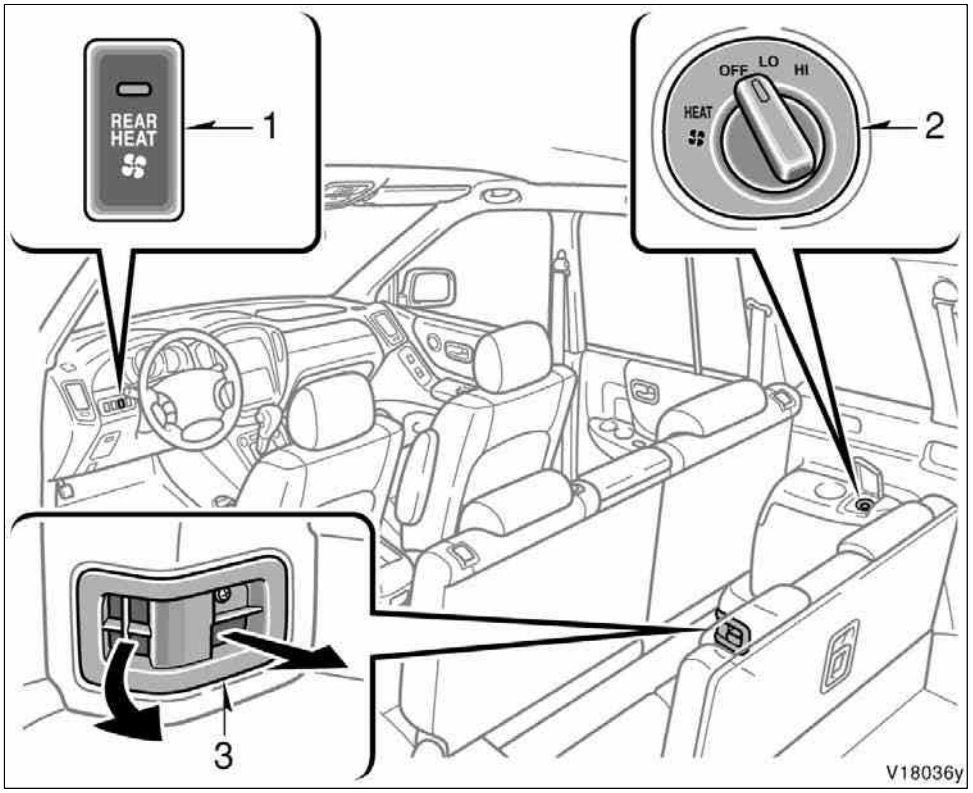

1. Main switch

Push the switch to turn the rear heater system on or off.

Turning the fan speed selector to the “LO” or “HI” position with the rear heater system on illuminates the main switch indicator.

2. Fan speed selector

Turn the knob to adjust the fan speed—to the right to increase, to the left to decrease.

When the rear heater system is off, the fan speed selector will not operate.

3. Rear heater vents

Air flows from the vents when the rear heater system is operating.

⚠ CAUTION

Do not place feet near the vents for long periods as burns may result.

Checking and replacing the air conditioning filter

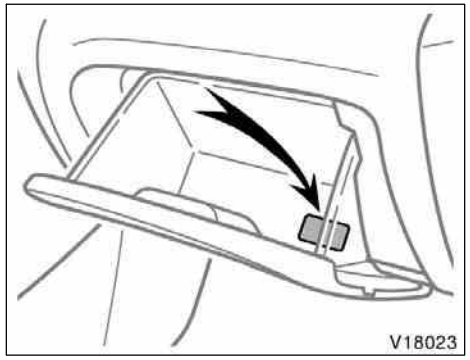

The air conditioning filter information label is placed in the glove box as shown and indicates that a filter has been installed.

The air conditioning filter prevents dust from entering the vehicle through the air conditioning vent.

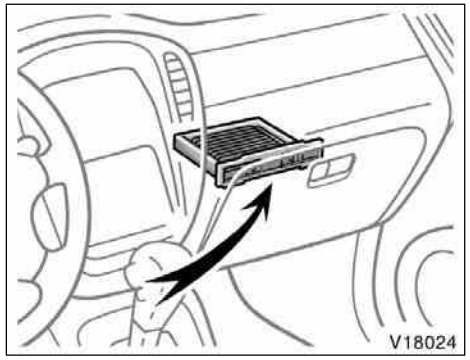

The air conditioning filter is behind the glove box.

The air conditioning filter may clog after long use. The filter may need to be replaced if the air flow of the air conditioning and heater experiences extreme reductions in operating efficiency, or if the windows begin to fog up easily.

To maintain the air conditioning efficiency, inspect and replace the air conditioning filter according to the maintenance schedule. In dusty areas or areas with heavy traffic flow, such as inner city or desert areas, early replacement may be required. (For scheduled maintenance information, please refer to the “Scheduled Maintenance Guide” or “Owner’s Manual Supplement”.)

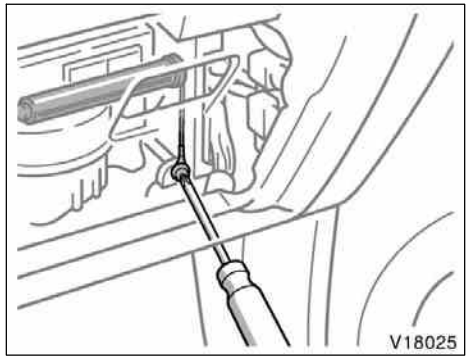

1. **Remove the clip with a Phillips–head screwdriver.**

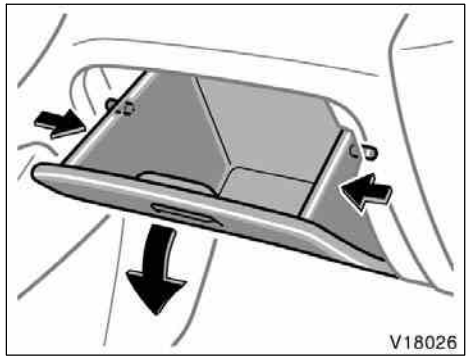

2. **Open the glove box and push each side of the glove box to disconnect the claws.**

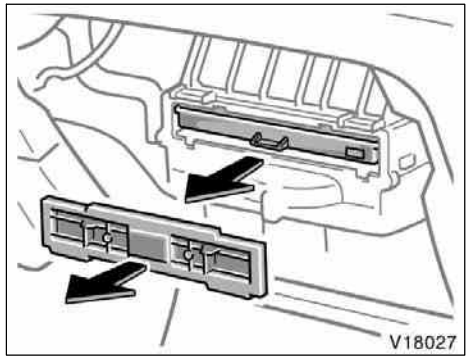

3. **Pull the filter cover toward you and remove it.**
4. **Remove the filter case toward you.**

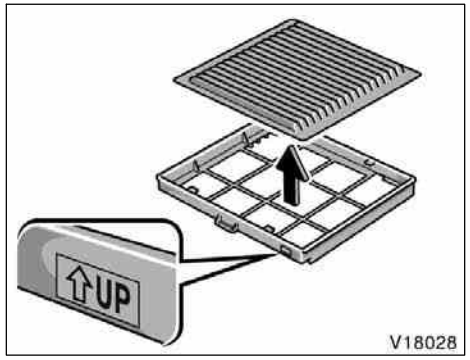

5. **Remove the filter from the filter case.**
6. **Inspect the filter on the surface.**

If it is dirty, it should be replaced.

When installing the filter and filter case, keep the arrow pointing up.

INFORMATION
The air filter should be installed properly in position. The use of air conditioning with the air filter removed may cause deteriorated dustproof performance and then affect air conditioning performance.

SECTION 2

INFORMATION BEFORE DRIVING YOUR TOYOTA

Information before driving your Toyota

Off–road vehicle precautions 282
Break–in period 283
Fuel 283
Fuel pump shut off system 285
Operation in foreign countries 286
Three–way catalytic converters 286
Engine exhaust cautions 287
Facts about engine oil consumption 288
Iridium–tipped spark plugs 289
Brake system 289
Brake pad wear limit indicators 293
Your Toyota’s identification 293
Theft prevention labels 294
Suspension and chassis 295
Tire information 296
Vehicle load limits 304
Cargo and luggage 305
Types of tires 307

Off–road vehicle precautions

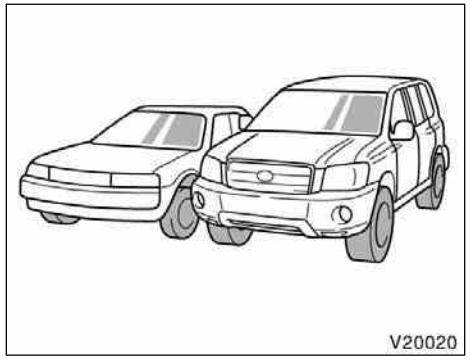

This vehicle belongs to the utility vehicle class, which has higher ground clearance and narrower tread in relation to the height of its center of gravity to make it capable of performing in a wide variety of off–road applications. Specific design characteristics give it a higher center of gravity than ordinary passenger cars. This vehicle design feature causes this type of vehicle to be more likely to rollover. And, utility vehicles have a significantly higher rollover rate than other types of vehicles. An advantage of the higher ground clearance is a better view of the road allowing you to anticipate problems. It is not designed for cornering at the same speeds as ordinary passenger cars any more than low–slung sports cars designed to perform satisfactorily under off–road conditions. Therefore, sharp turns at excessive speeds may cause rollover.

⚠ CAUTION

Always observe the following precautions to minimize the risk of serious personal injury or damage to your vehicle:

- **In a rollover crash, an unbelted person is significantly more likely to die than a person wearing a seat belt. Therefore, the driver and all passengers should fasten their seat belts whenever the vehicle is moving.**
- **Avoid sharp turns or abrupt maneuvers, if at all possible. Failure to operate this vehicle correctly may result in loss of control or vehicle rollover causing death or serious injury.**
- **Loading cargo on the roof luggage carrier will make the center of the vehicle gravity higher. Avoid high speeds, sudden starts, sharp turns, sudden braking or abrupt maneuvers, otherwise it may result in loss of control or vehicle rollover due to failure to operate this vehicle correctly.**

- **Always slow down in gusty cross-winds. Because of its profile and higher center of gravity, your vehicle is more sensitive to side winds than an ordinary passenger car. Slowing down will allow you to have better control.**
- **When driving off–road or in rugged terrain, do not drive at excessive speeds, jump, make sharp turns, strike objects, etc. This may cause loss of control or vehicle rollover causing death or serious injury. You are also risking expensive damage to your vehicle’s suspension and chassis.**
- **Do not drive horizontally across steep slopes. Driving straight up or straight down is preferred. Your vehicle (or any similar off–road vehicle) can tip over sideways much more easily than forward or backward.**

Break–in period

Drive gently and avoid high speeds.

Your vehicle does not need an elaborate break–in. But following a few simple tips for the first 1600 km (1000 miles) can add to the future economy and long life of your vehicle:

- Avoid full throttle acceleration when starting and driving.
- Avoid racing the engine.
- Try to avoid hard stops during the first 300 km (200 miles).
- Do not drive for a long time at any single speed, either fast or slow.
- Do not tow a trailer during the first 800 km (500 miles).

Fuel

FUEL TYPE

Your new vehicle must use only unleaded gasoline.

To help prevent gas station mix–ups, your Toyota has a smaller fuel tank opening. The special nozzle on pumps with unleaded fuel will fit it, but the larger standard nozzle on pumps with leaded gas will not.

At a minimum, the gasoline you use should meet the specifications of ASTM D4814 in the U.S.A. and CGSB 3.5–M93 in Canada.

NOTICE

Do not use leaded gasoline. Use of leaded gasoline will cause the three–way catalytic converter to lose its effectiveness and the emission control system to function improperly. Also, this can increase maintenance costs.

OCTANE RATING

2AZ–FE engine: Select Octane Rating 87 (Research Octane Number 91) or higher.

3MZ–FE engine: Select Octane Rating 87 (Research Octane Number 91) or higher. For improved vehicle performance, the use of premium unleaded gasoline with an Octane Rating of 91 (Research Octane Number 96) or higher is recommended.

Use of unleaded gasoline with an octane rating or research octane number lower than stated above will cause persistent heavy knocking. If it is severe, this will lead to engine damage.

If your engine knocks...

If you detect heavy knocking even when using the recommended fuel, or if you hear steady knocking while holding a steady speed on level roads, consult your Toyota dealer.

However, occasionally, you may notice light knocking for a short time while accelerating or driving up hills. This is normal and there is no need for concern.

GASOLINE CONTAINING DETERGENT ADDITIVES

Toyota recommends the use of gasoline that contains detergent additives to avoid build–up of engine deposits.

However, all gasoline sold in the U.S. contains detergent additives to keep clean and/or clean intake systems.

QUALITY GASOLINE

Automotive manufacturers in the U.S., Europe and Japan have developed a specification for quality fuel named World–Wide Fuel Charter (WWFC) that is expected to be applied world wide. The WWFC consists of four categories that depend on required emission levels. In the U.S., category 3 or 4 has been adopted. The WWFC improves air quality by providing for better emissions in vehicle fleets, and customer satisfaction through better vehicle performance.

CLEANER BURNING GASOLINE

Cleaner burning gasoline, including reformulated gasoline that contains oxygenates such as ethanol or MTBE is available in many areas.

Toyota recommends the use of cleaner burning gasoline and appropriately blended reformulated gasoline. These types of gasoline provide excellent vehicle performance, reduce vehicle emissions, and improve air quality.

OXYGENATES IN GASOLINE

Toyota allows the use of oxygenate blended gasoline where the oxygenate content is up to 10% ethanol or 15% MTBE. If you use gasohol in your Toyota, be sure that it has an octane rating no lower than 87.

Toyota does not recommend the use of gasoline containing methanol.

GASOLINE CONTAINING MMT

Some gasoline contain an octane enhancing additive called MMT (Methylcyclopentadienyl Manganese Tricarbonyl).

Toyota does not recommend the use of gasoline that contains MMT. If fuel containing MMT is used, your emission control system may be adversely affected. The Malfunction Indicator Lamp on the instrument cluster may come on. If this happens, contact your Toyota dealer for service.

GASOLINE QUALITY

In a very few cases, you may experience driveability problems caused by the particular gasoline that you are using. If you continue to have unacceptable driveability, try changing gasoline brands. If this does not rectify your problem, then consult your Toyota dealer.

NOTICE

- ***Do not use gasohol other than stated above. It will cause fuel system damage or vehicle performance problems.***
- ***If driveability problems occur (poor hot starting, vaporizing, engine knock, etc.), discontinue the use.***
- ***Take care not to spill gasohol during refueling. Gasohol may cause paint damage.***

FUEL TANK CAPACITY

72.5 L (19.1 gal., 16.0 Imp. gal.)

Fuel pump shut off system

The fuel pump shut off system stops supplying fuel to the engine to minimize the risk of fuel leakage when the engine stalls or an airbag inflates upon collision. To restart the engine after the fuel pump shut off system activates, turn the ignition switch to “ACC” or “LOCK” once and start it.

⚠ CAUTION

Inspect the ground under the vehicle before restarting the engine. If you find that liquid has leaked onto the ground, it is the fuel system has been damaged and it is in need of repair. In this case, do not restart the engine.

Operation in foreign countries

If you plan to drive your Toyota in another country...

First, comply with the vehicle registration laws.

Second, confirm the availability of the correct fuel (unleaded and minimum octane number).

Three–way catalytic converters

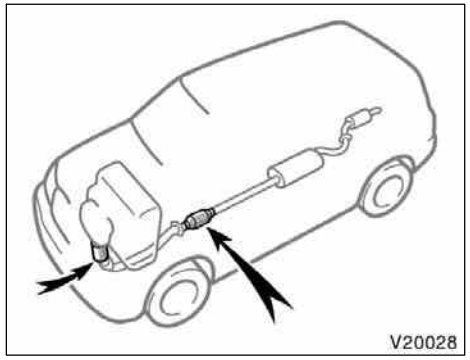

2AZ–FE engine

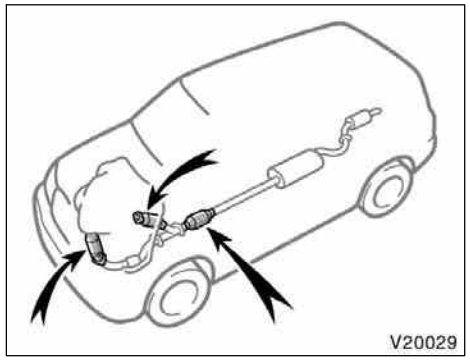

3MZ–FE engine

The three–way catalytic converter is an emission control device installed in the exhaust system.

The purpose is to reduce pollutants in the exhaust gas.

⚠ CAUTION

- **Keep people and combustible materials away from the exhaust pipe while the engine is running. The exhaust gas is very hot.**
- **Do not idle or park your vehicle over anything that might burn easily such as grass, leaves, paper or rags.**

NOTICE

A large amount of unburned gases flowing into the three–way catalytic converter may cause it to overheat and create a fire hazard. To prevent this and other damage, observe the following precautions:

- ***Use only unleaded gasoline.***
- ***Do not drive with an extremely low fuel level; running out of fuel could cause the engine to misfire, creating an excessive load on the three–way catalytic converter.***
- ***Do not allow the engine to run at idle speed for more than 20 minutes.***
- ***Avoid racing the engine.***
- ***Do not push–start or pull–start your vehicle.***
- ***Do not turn off the ignition while the vehicle is moving.***
- ***Keep your engine in good running order. Malfunctions in the engine electrical system, electronic ignition system/distributor ignition system or fuel systems could cause an extremely high three–way catalytic converter temperature.***
- ***If the engine becomes difficult to start or stalls frequently, take your vehicle in for a check–up as soon as possible. Remember, your Toyota dealer knows your vehicle and its three–way catalytic converter system best.***
- ***To ensure that the three–way catalytic converter and the entire emission control system operate properly, your vehicle must receive the periodic inspections required by the Toyota Maintenance Schedule. For scheduled maintenance information, refer to the “Scheduled Maintenance Guide” or “Owner’s Manual Supplement”.***

Engine exhaust cautions

⚠ CAUTION

- **Avoid inhaling the engine exhaust. It contains carbon monoxide, which is a colorless and odorless gas. It can cause unconsciousness or even death.**
- **Make sure the exhaust system has no holes or loose connections. The system should be checked from time to time. If you hit something, or notice a change in the sound of the exhaust, have the system checked immediately.**
- **Do not run the engine in a garage or enclosed area except for the time needed to drive the vehicle in or out. The exhaust gases cannot escape, making this a particularly dangerous situation.**
- **Do not remain for a long time in a parked vehicle with the engine running. If it is unavoidable, however, do so only in an unconfined area and adjust the heating or cooling system to force outside air into the vehicle.**

- **Keep the back door closed while driving. An open or unsealed back door may cause exhaust gases to be drawn into the vehicle.**
- **To allow proper operation of your vehicle’s ventilation system, keep the inlet grilles in front of the windshield clear of snow, leaves, or other obstructions.**
- **If you smell exhaust fumes in the vehicle, drive with the windows open and the back door closed. Have the cause immediately located and corrected.**

Facts about engine oil consumption

FUNCTIONS OF ENGINE OIL

Engine oil has the primary functions of lubricating and cooling the inside of the engine, and plays a major role in maintaining the engine in proper working order.

ENGINE OIL CONSUMPTION

It is normal that an engine should consume some engine oil during normal engine operation. The causes of oil consumption in a normal engine are as follows.

- Oil is used to lubricate pistons, piston rings and cylinders. A thin film of oil is left on the cylinder wall when a piston moves downwards in the cylinder. High negative pressure generated when the vehicle is decelerating sucks some of this oil into the combustion chamber. This oil as well as some part of the oil film left on the cylinder wall is burned by the high temperature combustion gases during the combustion process.
- Oil is also used to lubricate the stems of the intake valves. Some of this oil is sucked into the combustion chamber together with the intake air and is burned along with the fuel. High temperature exhaust gases also burn the oil used to lubricate the exhaust valve stems.

The amount of engine oil consumed depends on the viscosity of the oil, the quality of the oil and the conditions the vehicle is driven under.

More oil is consumed by high–speed driving and frequent acceleration and deceleration.

A new engine consumes more oil, since its pistons, piston rings and cylinder walls have not become conditioned.

Oil consumption: Max. 1.0 L per 1000 km (1.1 qt./600 miles, 0.9 Imp. qt./600 miles)

When judging the amount of oil consumption, note that the oil may become diluted and make it difficult to judge the true level accurately.

As an example, if a vehicle is used for repeated short trips, and consumes a normal amount of oil, the dipstick may not show any drop in the oil level at all, even after 1000 km (600 miles) or more. This is because the oil is gradually becoming diluted with fuel or moisture, making it appear that the oil level has not changed.

The diluting ingredients evaporate out when the vehicle is then driven at high speeds, as on an expressway, making it appear that oil is excessively consumed after driving at high speeds.

IMPORTANCE OF ENGINE OIL LEVEL CHECK

One of the most important points in proper vehicle maintenance is to keep the engine oil at the optimum level so that oil function will not be impaired. Therefore, it is essential that the oil level be checked regularly. Toyota recommends that the oil level be checked every time you refuel the vehicle.

NOTICE

Failure to check the oil level regularly could lead to serious engine trouble due to insufficient oil.

For detailed information on oil level check, see “Checking the engine oil level” on page 372 in Section 7–2.

Iridium–tipped spark plugs

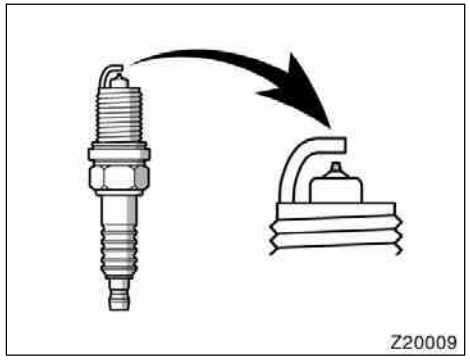

Your engine is fitted with iridium–tipped spark plugs.

NOTICE

Use only iridium–tipped spark plugs and do not adjust gaps for your engine performance and smooth driveability.

Brake system

The tandem master cylinder brake system is a hydraulic system with two separate sub–systems. If either sub–system should fail, the other will still work. However, the pedal will be harder to press, and your stopping distance will increase. Also, the brake system warning light may come on.

CAUTION

Do not drive your vehicle with only a single brake system. Have your brakes fixed immediately.

BRAKE BOOSTER

The brake booster uses engine vacuum to power–assist the brakes. If the engine should quit while you are driving, you can bring the vehicle to a stop with normal pedal pressure. There is enough reserved vacuum for one or two stops—but no more!

CAUTION

- **Do not pump the brake pedal if the engine stalls. Each push on the pedal uses up your reserved vacuum.**
- **Even if the power assist is completely lost, the brakes will still work. But you will have to push the pedal hard, much harder than normal. And your braking distance will increase.**

ANTI–LOCK BRAKE SYSTEM (with “ABS” warning light)

The anti–lock brake system is designed to help prevent lock–up of the wheels during a sudden braking or braking on slippery road surfaces. This assists in providing directional stability and steering performance of the vehicle under these circumstances.

Effective way to press the ABS brake pedal: When the anti–lock brake system function is in action, you may feel the brake pedal pulsating and hear a noise. In this situation, to let the anti–lock brake system work for you, just hold the brake pedal down more firmly. Do not pump the brake in a panic stop. This will result in reduced braking performance.

The anti–lock brake system becomes operative after the vehicle has accelerated to a speed in excess of approximately 10 km/h (6 mph). It stops operating when the vehicle decelerates to a speed below approximately 5 km/h (3 mph).

Depressing the brake pedal on slippery road surfaces such as on a manhole cover, a steel plate at a construction site, joints in a bridge, etc. on a rainy day tends to activate the anti–lock brake system.

You may hear a click or motor sound in the engine compartment for a few seconds when the engine is started or just after the vehicle begins to move. This means that the anti–lock brake system is in the self–check mode, and does not indicate a malfunction.

When the anti–lock brake system is activated, the following conditions may occur. They do not indicate a malfunction of the system:

- You may hear the anti–lock brake system operating and feel the brake pedal pulsating and the vibrations of the vehicle body and steering wheel. You may also hear the motor sound in the engine compartment even after the vehicle is stopped.
- At the end of the anti–lock brake system activation, the brake pedal may move a little forward.

⚠ CAUTION

Do not overestimate the anti–lock brake system: Although the anti–lock brake system assists in providing vehicle control, it is still important to drive with all due care and maintain a moderate speed and safe distance from the vehicle in front of you, because there are limits to the vehicle stability and effectiveness of steering wheel operation even with the anti–lock brake system on.

If tire grip performance exceeds its capability, or if hydroplaning occurs during high speed driving in the rain, the anti–lock brake system does not provide vehicle control.

Anti–lock brake system is not designed to shorten the stopping distance: Always drive at the moderate speed and maintain a safe distance from the vehicle in front of you. Compared with vehicles without an anti–lock brake system, your vehicle may require a longer stopping distance in the following cases:

- **Driving on rough, gravel or snow–covered roads.**
- **Driving with tire chains installed.**
- **Driving over the steps such as the joints on the road.**
- **Driving on roads where the road surface is pitted or has other differences in surface height.**

Install all 4 tires of specified size at appropriate pressure: The anti–lock brake system detects vehicle speeds using the speed sensors for respective wheels’ turning speeds. The use of tires other than specified may fail to detect the accurate turning speed resulting in a longer stopping distance.

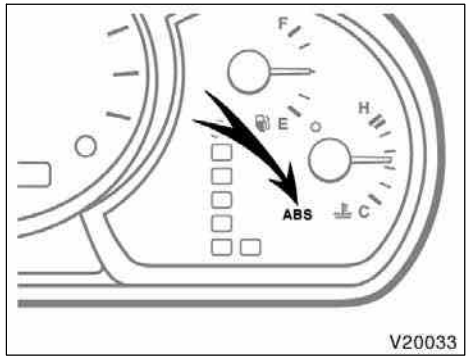

Type A

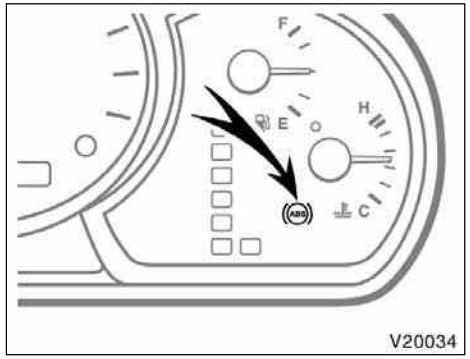

Type B

“ABS” warning light

The light comes on when the ignition key is turned to the “ON” position. If the anti–lock brake system and the brake assist system work properly, the light turns off after a few seconds. Thereafter, if the system malfunctions, the light comes on again.

When the “ABS” warning light is on (and the brake system warning light is off), the anti–lock brake system, the brake assist system, the traction control system and the vehicle stability control system do not operate, but the brake system still operates conventionally.

When the “ABS” warning light is on (and the brake system warning light is off), the anti–lock brake system does not operate so that the wheels could lock up during a sudden braking or braking on slippery road surfaces.

If either of the following conditions occurs, this indicates a malfunction somewhere in the components monitored by the warning light system. Contact your Toyota dealer as soon as possible to service the vehicle.

- The light does not come on when the ignition key is turned to the “ON” position, or remains on.
- The light comes on while you are driving.

A warning light turning on briefly during operation does not indicate a problem.

CAUTION

If the “ABS” warning light remains on together with the brake system warning light, immediately stop your vehicle at a safe place and contact your Toyota dealer.

In this case, not only the anti–lock brake system will fail but also the vehicle will become extremely unstable during braking.

DRUM–IN–DISC TYPE PARKING BRAKE SYSTEM

Your vehicle has a drum–in–disc type parking brake system. This type of brake system needs bedding–down of the brake shoes periodically or whenever the parking brake shoes and/or drums are replaced.

Have your Toyota dealer perform the bedding–down.

BRAKE ASSIST SYSTEM

If you slam the brakes on such as in an emergency or apply the brakes more firmly than usual such as when descending the hill with the designated number of occupants in the vehicle, the brake assist system provides more powerful braking.

If you slam the brakes on or apply the brakes more firmly, more powerful braking will be applied. At this time, you may hear a sound in the engine compartment and feel the vibrations of the brake pedal. This does not indicate a malfunction.

The brake assist system becomes operative after the vehicle has accelerated to a speed in excess of approximately 10 km/h (6 mph). It stops operating when the vehicle decelerates to a speed below approximately 5 km/h (3 mph).

For an explanation of this system’s warning light, see “Service reminder indicators and warning buzzers” on page 129 in Section 1–6.

Brake pad wear limit indicators

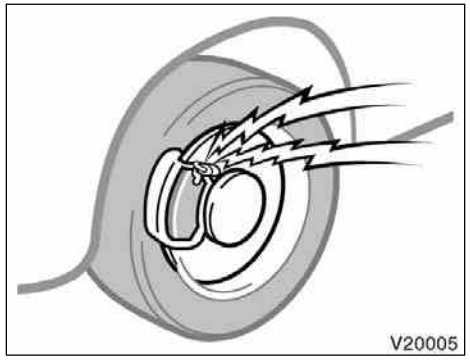

The brake pad wear limit indicators on your disc brakes give a warning noise when the brake pads are worn to where replacement is required.

If you hear a squealing or scraping noise while driving, have the brake pads checked and replaced by your Toyota dealer as soon as possible. Expensive rotor damage can result if the pads are not replaced when necessary.

Your Toyota’s identification——Vehicle identification number

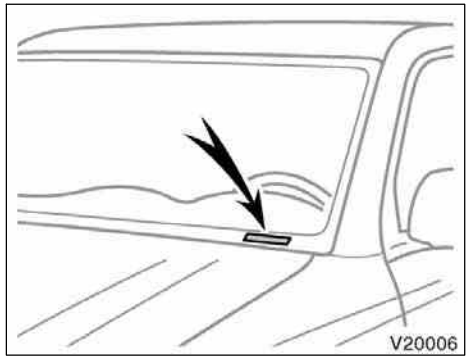

The vehicle identification number (VIN) is the legal identifier for your vehicle. This number is on the left top of the instrument panel, and can be seen through the windshield from outside.

This is the primary identification number for your Toyota. It is used in registering the ownership of your vehicle.

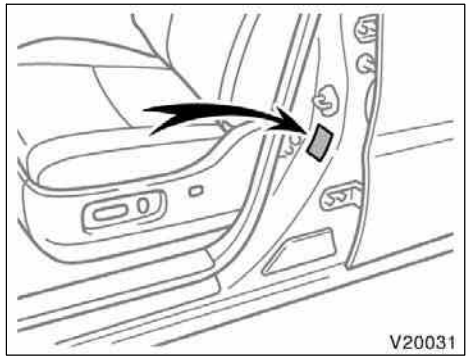

The vehicle identification number (VIN) is also on the Certification Regulation Label.

—Engine number

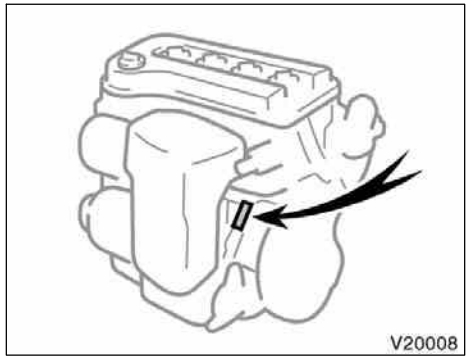

2AZ–FE engine

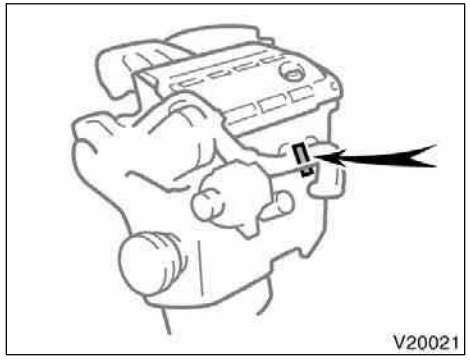

3MZ–FE engine

The engine number is stamped on the engine block as shown.

Theft prevention labels (except for Canada)

Your new vehicle carries theft prevention labels which are approximately 47 mm (1.85 in.) by 12 mm (0.47 in.).

The purpose of these labels is to reduce the incidence of vehicle thefts by facilitating the tracing and recovery of parts from stolen vehicles. The label is designed so that once it is applied to a surface, any attempt to remove it will result in destroying the integrity of the label. Transferring these labels intact from one part to another, will be impossible.

NOTICE
You should not attempt to remove the theft prevention labels as it may violate certain state or federal laws.

Suspension and chassis

⚠ CAUTION

Do not modify the suspension/chassis with lift kits, spacers, springs, etc. It can cause dangerous handling characteristics, resulting in loss of control.

Tire information—
—Tire symbols

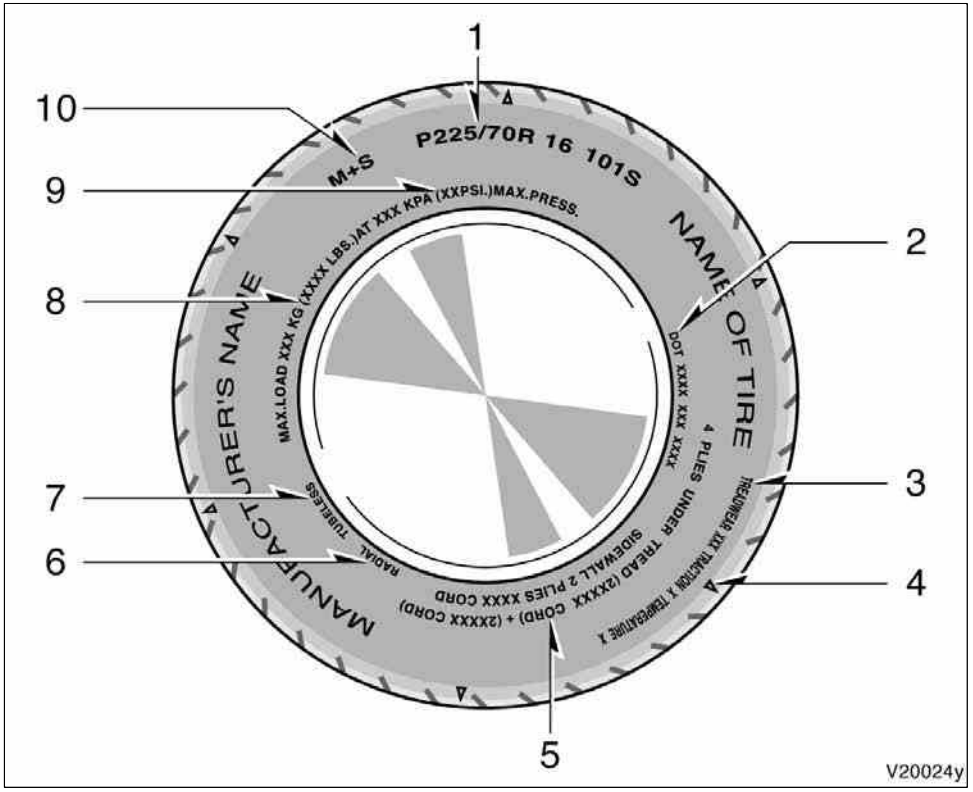

This illustration indicates typical tire symbols.

1. **Tire size—**For details, see “—Tire size” on page 298.
2. **DOT and Tire Identification Number (TIN)—**For details, see “—DOT and Tire Identification Number (TIN)” on page 297.
3. **Uniform tire quality grading—**For details, see “Uniform tire quality grading” on page 299.
4. **The location of the tread wear indicators—**For details, see “Checking and replacing tires” on page 380.
5. **Tire ply composition and materials—**Plies mean a layer of rubber–coated parallel cords. Cords mean the strands forming the plies in the tire.
6. **Radial tire or bias–ply tires—**A radial tire has “RADIAL” on the sidewall. The tire not marked with “RADIAL” is a bias–ply tire.

7. **“TUBELESS” or “TUBE TYPE”—**A tubeless tire does not have a tube inside the tire and air is directly filled in the tire. A tube type tire has a tube inside the tire and the tube maintains the air pressure.
8. **Load limit at maximum cold tire inflation pressure—**For details, see “Checking and replacing tires” on page 380.
9. **Maximum cold tire inflation pressure—**This means the pressure to which a tire may be inflated. For details about recommended cold tire inflation pressure, see “Tires” on page 402.
10. **Summer tire or all season tire—**An all season tire has “M+S” on the sidewall. The tire not marked with “M+S” is a summer tire. For details, see “Types of tires” on page 307.

—DOT and Tire Identification Number (TIN)

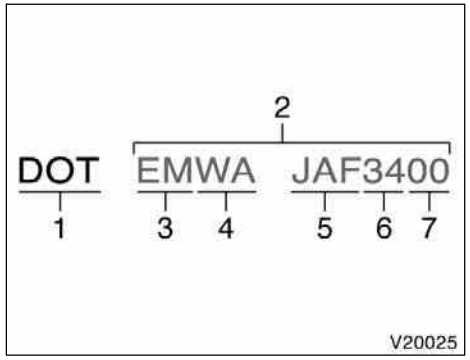

This illustration indicates typical DOT and Tire Identification Number (TIN).

1. “DOT” symbol
2. Tire Identification Number (TIN)
3. Tire manufacturer’s identification mark
4. Tire size code
5. Manufacturer’s optional tire type code
6. Manufacturing week
7. Manufacturing year

The “DOT” symbol certifies that the tire conforms to applicable Federal Motor Vehicle Safety Standards.

—Tire size

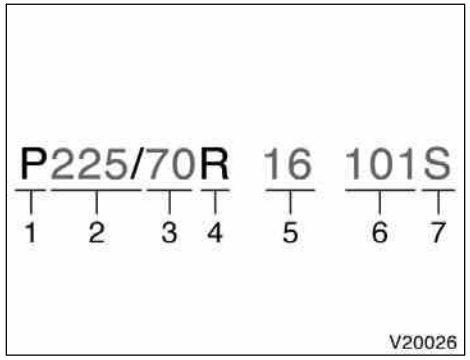

This illustration indicates typical tire size.

1. Tire use (P=Passenger car, T=Temporary use)
2. Section width (in millimeters)
3. Aspect ratio (tire height to section width)
4. Tire construction code (R=Radial, D=Diagonal)
5. Wheel diameter (in inch)
6. Load index (2 digits or 3 digits)
7. Speed symbol (alphabet with one letter)

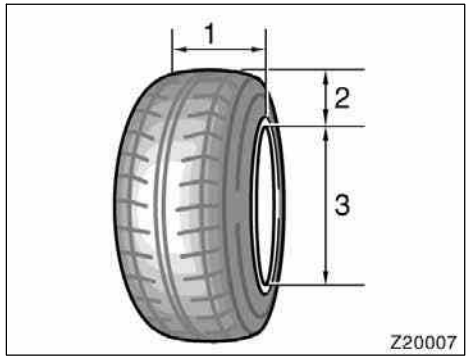

1. Section width
2. Tire height
3. Wheel diameter

—Name of each section of tire

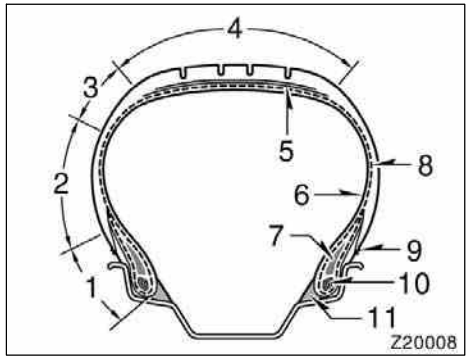

1. Bead
2. Sidewall
3. Shoulder
4. Tread
5. Belt
6. Inner liner
7. Reinforcing rubber
8. Carcass
9. Rim lines
10. Bead wires
11. Chafer

—Uniform tire quality grading

This information has been prepared in accordance with regulations issued by the National Highway Traffic Safety Administration of the U.S. Department of Transportation. It provides the purchasers and/or prospective purchasers of Toyota vehicles with information on uniform tire quality grading.

Your Toyota dealer will help answer any questions you may have as you read this information.

DOT quality grades—All passenger vehicle tires must conform to Federal Safety Requirements in addition to these grades. Quality grades can be found where applicable on the tire sidewall between tread shoulder and maximum section width. For example: Treadwear 200 Traction AA Temperature A

Treadwear—The treadwear grade is a comparative rating based on the wear rate of the tire when tested under controlled conditions on a specified government test course. For example, a tire graded 150 would wear one and a half (1–1/2) times as well on the government course as a tire graded 100. The relative performance of tires depends upon the actual conditions of their use, however, and may depart significantly from the norm due to variations in driving habits, service practices and differences in road characteristics and climate.

Traction AA, A, B, C—The traction grades, from highest to lowest, are AA, A, B, and C, and they represent the tire’s ability to stop on wet pavement as measured under controlled conditions on specified government test surfaces of asphalt and concrete. A tire marked C may have poor traction performance.

Warning: The traction grade assigned to this tire is based on braking (straight ahead) traction tests and does not include cornering (turning) traction.

Temperature A, B, C—The temperature grades are A (the highest), B, and C, representing the tire’s resistance to the generation of heat and its ability to dissipate heat when tested under controlled conditions on a specified indoor laboratory test wheel. Sustained high temperature can cause the material of the tire to degenerate and reduce tire life, and excessive temperature can lead to sudden tire failure. The grade C corresponds to a level of performance which all passenger car tires must meet under the Federal Motor Vehicle Safety Standard No.109. Grades B and A represent higher levels of performance on the laboratory test wheel than the minimum required by law.

Warning: The temperature grades for this tire are established for a tire that is properly inflated and not overloaded. Excessive speed, underinflation, or excessive loading, either separately or in combination, can cause heat buildup and possible tire failure.

—Tire related terms

Cold tire inflation pressure	Tire inflation pressure when the vehicle has been parked at least 3 hours or more, or it has not been driven more than 1.5 km or 1 mile under that condition
Maximum inflation pressure	The maximum cold inflation pressure to which a tire may be inflated and shown on the sidewall of the tire
Recommended inflation pressure	Cold tire inflation pressure recommended by a manufacturer
Accessory weight	The combined weight (in excess of those standard items which may be replaced) of automatic transmission, power steering, power brakes, power windows, power seats, radio, and heater, to the extent that these items are available as factory–installed equipment (whether installed or not)
Curb weight	The weight of a motor vehicle with standard equipment including the maximum capacity of fuel, oil, and coolant, and, if so equipped, air conditioning and additional weight optional engine
Maximum loaded vehicle weight	The sum of— (a) Curb weight; (b) Accessory weight; (c) Vehicle capacity weight; and (d) Production options weight
Normal occupant weight	68 kg (150 lb.) times the number of occupants specified in the second column of Table 1 that follows

Production options weight	The combined weight of those installed regular production options weighing over 2.3 kg (5 lb.) in excess of those standard items which they replace, not previously considered in curb weight or accessory weight, including heavy duty brakes, ride levelers, roof rack, heavy duty battery, and special trim
Vehicle capacity weight (Total load capacity)	The rated cargo and luggage load plus 68 kg (150 lb.) times the vehicle’s designated seating capacity
Intended outboard sidewall	(A) The sidewall that contains a whitewall, bears white lettering or bears manufacturer, brand, and/or model name molding that is higher or deeper than the same molding on the other sidewall of the tire, or (B) The outward facing sidewall of an asymmetrical tire that has a particular side that must always face outward when mounted on a vehicle
Occupant distribution	Distribution of occupants in a vehicle as specified in the third column of Table 1 that follows
Rim	A metal support for a tire or a tire and tube assembly upon which the tire beads are seated
Rim diameter (Wheel diameter)	Nominal diameter of the bead seat
Rim size designation	Rim diameter and width
Rim type designation	The industry of manufacturer’s designation for a rim by style or code
Rim width	Nominal distance between rim flanges
Vehicle maximum load on the tire	The load on an individual tire that is determined by distributing to each axle its share of the maximum loaded vehicle weight and dividing by two

Vehicle normal load on the tire	The load on an individual tire that is determined by distributing to each axle its share of the curb weight, accessory weight, and normal occupant weight (distributed in accordance with Table 1 that follows) and dividing by two
Weather side	The surface area of the rim not covered by the inflated tire

Table 1—Occupant loading and distribution for vehicle normal load for various designated seating capacities

Designated seating capacity, number of occupants	Vehicle normal load, number of occupants	Occupant distribution in a normally loaded vehicle
2 through 4	2	2 in front
5 through 10	3	2 in front, 1 in second seat

Vehicle load limits

Vehicle load limits include total load capacity, seating capacity, towing capacity and cargo capacity. Follow the load limits shown below.

Total load capacity:

Without third seat
390 kg (860 lb.)
With third seat
526 kg (1159 lb.)

Total load capacity means combined weight of occupants, cargo and luggage. Tongue load is included when trailer towing.

Seating capacity:

Without third seat
Total 5 (Front 2, Rear 3)
With third seat
Total 7 (Front 2, Rear 5)

Seating capacity means the maximum number of occupants whose weight is supposed to be 68 kg (150 lb.) per person. Depending on the weight of person, the seating capacity given may exceed the total load capacity.

NOTICE

Even if the number of occupants are within the seating capacity, do not exceed the total load capacity.

Towing capacity:

2AZ–FE engine
1360 kg (3000 lb.)
3MZ–FE engine
1585 kg (3500 lb.)

Towing capacity means the maximum gross trailer weight (trailer weight plus its cargo weight) that your vehicle is able to tow.

Cargo capacity

Cargo capacity may increase or decrease depending on the size (weight) and the number of occupants. For details, see “—Capacity and distribution” on page 306.

⚠ CAUTION

Do not apply the load more than each load limit. That may cause not only damage to the tires, but also deterioration to the steering ability and braking ability, which may cause an accident.

Cargo and luggage—
—Stowage precautions

When stowing cargo and luggage in the vehicle, observe the following:

- Put cargo and luggage in the luggage compartment when at all possible. Be sure all items are secured in place.
- Be careful to keep the vehicle balanced. Locating the weight as far forward as possible helps maintain balance.
- For better fuel economy, do not carry unneeded weight.

⚠ CAUTION

- **To prevent cargo and luggage from sliding forward during braking, do not stack anything in the luggage compartment higher than the seatbacks. Keep cargo and luggage low, as close to the floor as possible.**
- **Never allow anyone to ride in the luggage compartment. It is not designed for passengers. They should ride in their seats with their seat belts properly fastened. Otherwise, they are much more likely suffer serious bodily injury, in the event of sudden braking or a collision.**
- **Do not place anything on the flattened seat, or it may slide forward during braking.**
- **Do not place anything on the luggage cover. Such items may be thrown about and possibly injure people in the vehicle during sudden braking or an accident. Secure all items in a safe place.**
- **Do not drive with objects left on top of the instrument panel. They may interfere with the driver’s field of view. Or they may move during sharp vehicle acceleration or turning, and impair the driver’s control of the vehicle. In an accident they may injure the vehicle occupants.**
- **Do not put objects in the container which can shift, roll out or be thrown out in the event of sudden stops or accidents. Objects which come out of the container can create a safety hazard due to interference with pedal operation or driver distraction.**

—Capacity and distribution

Cargo capacity depends on the total weight of the occupants.

(Cargo capacity) = (Total load capacity) – (Total weight of occupants)

STEPS FOR DETERMINING CORRECT LOAD LIMIT

1. Locate the statement “The combined weight of occupants and cargo should never exceed XXX pounds” on your vehicle’s placard.
2. Determine the combined weight of the driver and passengers that will be riding in your vehicle.
3. Subtract the combined weight of the driver and passengers from XXX kilograms or XXX pounds.
4. The resulting figure equals the available amount of cargo and luggage load capacity. For example, if the “XXX” amount equals 1400 lbs. and there will be five 150 lb. passengers in your vehicle, the amount of available cargo and luggage load capacity is 650 lbs. (1400–750 (5x150)=650 lbs).
5. Determine the combined weight of luggage and cargo being loaded on the vehicle. That weight may not safely exceed the available cargo and luggage load capacity calculated in Step 4.
6. If your vehicle will be towing a trailer, load from your trailer will be transferred to your vehicle. Consult this manual to determine how this reduces the available cargo and luggage load capacity of your vehicle.

For details about trailer towing, see page 315.

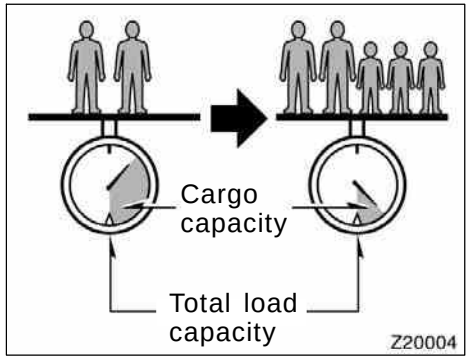

EXAMPLE ON YOUR VEHICLE

In case that 2 people with the combined weight of 166 kg (366 lb.) are riding in your vehicle, the available amount of cargo and luggage load capacity will be as follows:

Without third seat
Total load capacity: 390 kg (860 lb.)
390 kg – 166 kg = 224 kg.
(860 lb. – 366 lb. = 494 lb.)

With third seat
Total load capacity: 526 kg (1159 lb.)
526 kg – 166 kg = 360 kg.
(1159 lb. – 366 lb. = 793 lb.)

From this condition, if 3 more passengers with the combined weight of 176 kg (388 lb.) get on, the available cargo and luggage load will be reduced as follows:

Without third seat
224 kg – 176 kg = 48 kg.
(494 lb. – 388 lb. = 106 lb.)

With third seat
360 kg – 176 kg = 184 kg.
(793 lb. – 388 lb. = 405 lb.)

As shown in the above example, if the number of occupants increases, the cargo and luggage load equaling the combined weight of occupants who got on later must be reduced. In other words, if the increase in the number of occupants causes the excess of the total load capacity (combined weight of occupants plus cargo and luggage load), you have to reduce the cargo and luggage on your vehicle.

For details about total load capacity, see “Vehicle load limits” on page 304.

CAUTION

Even if the total load of occupant’s weight and the cargo load is less than the total load capacity, do not apply the load unevenly. That may cause not only damage to the tire but also deterioration to the steering ability due to unbalance of the vehicle, causing an accident.

Types of tires

Determine what kind of tires your vehicle is originally equipped with.

1. Summer tires

Summer tires are high–speed capability tires best suited to highway driving under dry conditions.

Since summer tires do not have the same traction performance as snow tires, summer tires are inadequate for driving on snow–covered or icy roads. For driving on snow–covered or icy roads, we recommend using snow tires. If installing snow tires, be sure to replace all four tires.

2. All season tires

All season tires are designed to provide better traction in snow and to be adequate for driving in most winter conditions, as well as for use all year round.

All season tires, however, do not have adequate traction performance compared with snow tires in heavy or loose snow. Also, all season tires fall short in acceleration and handling performance compared with summer tires in highway driving.

⚠ CAUTION

- **Do not mix summer and all season tires on your vehicle as this can cause dangerous handling characteristics, resulting in loss of control.**
- **Do not use tire other than the manufacturer’s designated tires, and never mix tires or wheels of the sizes different from the originals.**

SECTION 3

STARTING AND DRIVING

Starting and driving

Before starting the engine 310
How to start the engine 310
Tips for driving in various conditions 311
Off–road driving precautions 312
Winter driving tips 313
Dinghy towing 314
Trailer towing 315
How to save fuel and make your vehicle last longer 320

Before starting the engine

1. Check the area around the vehicle before entering it.
2. Adjust seat position, seatback angle, seat cushion angle, seat height, head restraint height and steering wheel angle.
3. Adjust the inside and outside rear view mirrors.
4. Lock all side doors and back door.
5. Fasten seat belts.

How to start the engine—(a) Before cranking

1. Apply the parking brake firmly.
2. Turn off unnecessary lights and accessories.
3. Put the selector lever in “P”. If you need to restart the engine while the vehicle is moving, put the selector lever in “N”. A starter safety device will prevent the starter from operating if the selector lever is in any drive position.
4. Depress the brake pedal and hold it to the floor until driving off.

(b) Starting the engine

Before starting the engine, be sure to follow the instructions in “(a) Before cranking”.

Normal starting procedure

The multiport fuel injection system/sequential multiport fuel injection system in your engine automatically controls the proper air–fuel mixture for starting. You can start a cold or hot engine as follows:

With your foot off the accelerator pedal, crank the engine by turning the key to “START”. Release it when the engine starts.

Engine should be warmed up by driving, not in idle. For warming up, drive with smoothly turning engine until engine coolant temperature is within normal range.

If the engine stalls...

Simply restart it, using the correct procedure given in normal starting.

If the engine will not start...

See “If your vehicle will not start” on page 324 in Section 4.

NOTICE

- ***Do not crank for more than 30 seconds at a time. This may overheat the starter and wiring systems.***
- ***Do not race a cold engine.***
- ***If the engine becomes difficult to start or stalls frequently, have the engine checked immediately.***

Tips for driving in various conditions

- Always slow down in gusty crosswinds. This will allow you much better control.
- Drive slowly onto curbs and, if possible, at a right angle. Avoid driving onto high, sharp–edged objects and other road hazards. Failure to do so can lead to severe tire damage such as a tire burst.

  Drive slowly when passing over bumps or travelling on a bumpy road. Otherwise, the impact could cause severe damage to the tires and/or wheels.
- When parking on a hill, turn the front wheels until they touch the curb so that the vehicle will not roll. Apply the parking brake, and place the transmission in “P”. If necessary, block the wheels.
- Washing your vehicle or driving through deep water may get the brakes wet. To see whether they are wet, check that there is no traffic near you, and then press the pedal lightly. If you do not feel a normal braking force, the brakes are probably wet. To dry them, drive the vehicle cautiously while lightly pressing the brake pedal with the parking brake applied. If they still do not work safely, pull to the side of the road and call a Toyota dealer for assistance.

⚠ CAUTION

- **Before driving off, make sure that the parking brake is fully released and the parking brake reminder light is off.**
- **Do not leave your vehicle unattended while the engine is running.**
- **Do not rest your foot on the brake pedal while driving. It can cause dangerous overheating, needless wear, and poor fuel economy.**
- **To drive down a long or steep hill, reduce your speed and downshift. Remember, if you ride the brakes excessively, they may overheat and not work properly.**
- **Be careful when accelerating, upshifting, downshifting or braking on a slippery surface. Sudden acceleration or engine braking, could cause the vehicle to spin or skid.**

- **Do not drive in excess of the speed limit. Even if the legal speed limit permits it, do not drive over 140 km/h (85 mph) unless your vehicle has high–speed capability tires. Driving over 140 km/h (85 mph) may result in tire failure, loss of control and possible injury. Be sure to consult a tire dealer to determine whether the tires on your vehicle are high–speed capability tires or not before driving at such speeds.**
- **Do not continue normal driving when the brakes are wet. If they are wet, your vehicle will require a longer stopping distance, and it may pull to one side when the brakes are applied. Also, the parking brake will not hold the vehicle securely.**

Off–road driving precautions

When driving your vehicle off–road, please observe the following precautions to ensure your driving enjoyment and to help prevent the closure of areas to off–road vehicles.

a. Drive your vehicle only in areas where off–road vehicles are permitted to travel.

b. Respect private property. Get owner’s permission before entering private property.

c. Do not enter areas that are closed. Honor gates, barriers and signs that restrict travel.

d. Stay on established roads. When conditions are wet, driving techniques should be changed or travel delayed to prevent damage to roads.

For owners in U.S. mainland, Hawaii and Puerto Rico:

To obtain additional information pertaining to driving your vehicle off–road, consult the following organizations.

- State and Local Parks and Recreation Departments
- State Motor Vehicle Bureau
- Recreational Vehicle Clubs
- U.S. Forest Service and Bureau of Land Management

⚠ CAUTION

Always observe the following precautions to minimize the risk of serious personal injury or damage to your vehicle:

- **Drive carefully when off the road. Do not take unnecessary risks by driving in dangerous places.**
- **Do not grip the steering wheel spokes when driving off–road. A bad bump could jerk the wheel and injure your hands. Keep both hands and especially your thumbs on the outside of the rim.**
- **Always check your brakes for effectiveness immediately after driving in sand, mud, water or snow.**
- **After driving through tall grass, mud, rock, sand, rivers, etc., check that there is no grass, bush, paper, rags, stone, sand, etc. adhering or trapped on the underbody. Clear off any such matter from the underbody. If the vehicle is used with these materials trapped or adhering to the underbody, a breakdown or fire could occur.**

- **In a rollover crash, an unbelted person is significantly more likely to die than a person wearing a seat belt. Therefore, the driver and all passengers should fasten their seat belts whenever the vehicle is moving.**
- **When driving off–road or in rugged terrain, do not drive at excessive speeds, jump, make sharp turns, strike objects, etc. This may cause loss of control or vehicle rollover causing death or serious injury. You are also risking expensive damage to your vehicle’s suspension and chassis.**

NOTICE

◆***If driving through water, such as when crossing shallow streams, first check the depth of the water and the bottom of the river bed for firmness. Drive slowly and avoid deep water.***

◆***Take all necessary safety measures to ensure that water damage to the engine or other components does not occur.***

Water entering the engine air intake will cause severe engine damage.

Water can wash the grease from wheel bearings, causing rusting and premature failure, and may also enter the differentials, transmission and transfer case, reducing the gear oil’s lubricating qualities.

◆***Sand and mud that has accumulated in brake drums and around brake discs may affect braking efficiency and may damage brake system components.***

◆***Always perform a maintenance inspection after each day of off–road driving that has taken you through rough terrain, sand, mud, or water. For scheduled maintenance information, refer to the “Scheduled Maintenance Guide” or “Owner’s Manual Supplement”.***

Winter driving tips

Make sure your coolant is properly protected against freezing.

Only use “Toyota Super Long Life Coolant” or similar high quality ethylene glycol based non–silicate, non–amine, non–nitrite, and non–borate coolant with long–life hybrid organic acid technology.

See “Checking the engine coolant level” on page 375 in Section 7–2 for details of coolant type selection.

“Toyota Super Long Life Coolant” is pre–mixed with 50% coolant and 50% deionized water. This coolant provides protection down to about –35°C (–31°F).

NOTICE

Do not use plain water alone.

Check the condition of the battery and cables.

Cold temperatures reduce the capacity of any battery, so it must be in top shape to provide enough power for winter starting. Section 7–3 tells you how to visually inspect the battery. Your Toyota dealer and most service stations will be pleased to check the level of charge.

Make sure the engine oil viscosity is suitable for the cold weather.

See page 372 in Section 7–2 for recommended viscosity. Leaving a heavy summer oil in your vehicle during winter months may cause harder starting. If you are not sure about which oil to use, call your Toyota dealer–he will be pleased to help.

Keep the door locks from freezing.

Squirt lock de–icer or glycerine into the locks to keep them from freezing.

Use a washer fluid containing an antifreeze solution.

This product is available at your Toyota dealer and most auto parts stores. Follow the manufacturer’s directions for how much to mix with water.

NOTICE
Do not use engine antifreeze or any other substitute because it may damage your vehicle’s paint.

Do not use your parking brake when there is a possibility it could freeze.

When parking, put the transmission into “P” and block the rear wheels. Do not use the parking brake, or snow or water accumulated in and around the parking brake mechanism may freeze, making it hard to release.

Keep ice and snow from accumulating under the fenders.

Ice and snow built up under your fenders can make steering difficult. During bad winter driving, stop and check under the fenders occasionally.

Depending on where you are driving, we recommend you carry some emergency equipment.

Some of the things you might put in the vehicle are tire chains, window scraper, bag of sand or salt, flares, small shovel, jumper cables, etc.

Dinghy towing

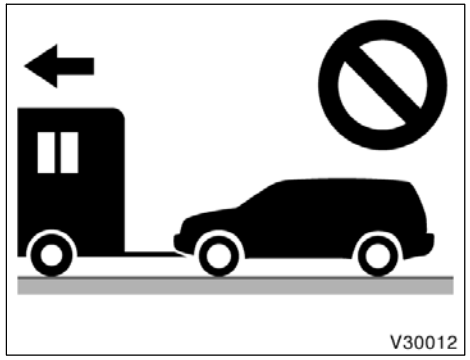

Your vehicle is not designed to be dinghy towed (with four wheels on the ground) behind a motorhome.

NOTICE
Do not tow your vehicle with four wheels on the ground. This may cause serious damage to your vehicle.

Trailer towing

Your vehicle is designed primarily as a passenger–and–load carrying vehicle. Towing a trailer will have an adverse effect on handling, performance, braking, durability and driving economy (fuel consumption, etc.). Your safety and satisfaction depend on the proper use of correct equipment and cautious driving habits. For your safety and the safety of others, you must not overload your vehicle or trailer. Toyota warranties do not apply to damage or malfunction caused by towing a trailer for commercial purposes. Ask your local Toyota dealer for further details before towing.

NOTICE

When towing a trailer, be sure to consult your Toyota dealer for further information on additional requirements such as a towing kit, etc.

WEIGHT LIMITS

Before towing, make sure the total trailer weight, gross combination weight, gross vehicle weight, gross axle weight and trailer tongue load are all within the limits.

The total trailer weight and tongue load can be measured with platform scales found at a highway weighing station, building supply company, trucking company, junk yard, etc.

⚠ CAUTION

- **The total trailer weight (trailer weight plus its cargo load) must not exceed the following. Exceeding this weight is dangerous.**

  2AZ–FE engine
  1360 kg (3000 lb.)
  3MZ–FE engine
  1585 kg (3500 lb.)

  If towing a trailer and cargo weighing over 907 kg (2000 lb.), it is necessary to use a sway control device with sufficient capacity. The gross combination weight (sum of your vehicle weight plus its load and the total trailer weight) must not exceed the following.

  2AZ–FE engine
  3790 kg (8360 lb.)
  3MZ–FE engine
  4015 kg (8860 lb.)

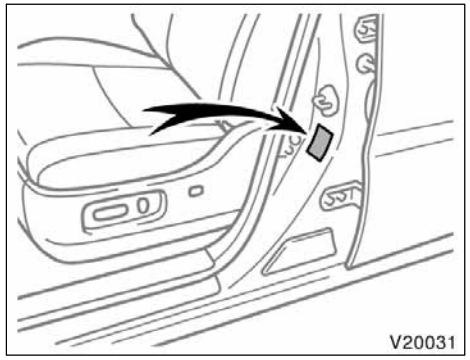

- **Trailer hitch assemblies have different weight capacities established by the hitch manufacturer. Even though the vehicle may be physically capable of towing a higher weight, the operator must determine the maximum weight rating of the particular hitch assembly and never exceed the maximum weight rating specified for the trailer hitch. Exceeding the maximum weight rating set by the trailer hitch manufacturer can cause an accident resulting in serious personal injuries.**

- **The gross vehicle weight must not exceed the Gross Vehicle Weight Rating (GVWR) indicated on the Certification Label. The gross vehicle weight is the sum of weights of the unloaded vehicle, driver, passengers, luggage, hitch and trailer tongue load. It also includes the weight of any special equipment installed on your vehicle.**
- **The load on either the front or rear axle resulting from distribution of the gross vehicle weight on both axles must not exceed the Gross Axle Weight Rating (GAWR) listed on the Certification Label.**

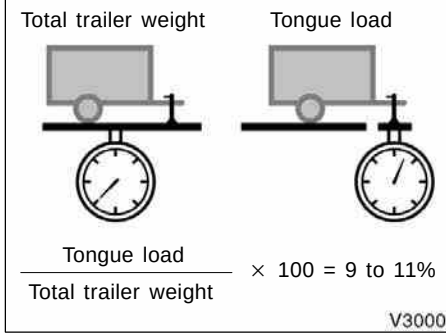

- **The trailer cargo load should be distributed so that the tongue load is 9 to 11% of the total trailer weight, not exceed the following.**

  2AZ–FE engine
  136 kg (300 lb.)
  3MZ–FE engine
  158 kg (350 lb.)

  Never load the trailer with more weight in the back than in the front. About 60% of the trailer load should be in the front half of the trailer and the remaining 40% in the rear.

HITCHES

- If you wish to install a trailer hitch, you should consult with your Toyota dealer.
- Use only a hitch recommended by the hitch manufacturer and the one which conforms to the total trailer weight requirement.
- The hitch must be bolted securely to the vehicle frame and installed according to the hitch manufacturer's instructions.
- The hitch ball and king pin should have a light coat of grease.
- Toyota recommends removing the trailer hitch whenever you are not towing a trailer to reduce the possibility of additional damage caused by the hitch if your vehicle is struck from behind. After removing the hitch, seal any mounting holes in the vehicle body to prevent entry of pollutants such as exhaust fumes, dirt, water, etc.

NOTICE

Do not use axle–mounted hitches as they can cause damage to the axle housing, wheel bearings, wheels or tires.

BRAKES AND SAFETY CHAINS

- **Toyota recommends trailers with brakes that conform to any applicable federal and state/provincial regulations.**
- **A safety chain must always be used between the towing vehicle and the trailer. Leave sufficient slack in the chain for turns. The chain should cross under the trailer tongue to prevent the tongue from dropping to the ground in case it becomes damaged or separated. For correct safety chain procedures, follow the hitch or trailer manufacturer's recommendations.**

⚠ CAUTION

- **If the total trailer weight exceeds 453 kg (1000 lb.), trailer brakes are required.**
- **Never tap into your vehicle's hydraulic system as it would lower its braking effectiveness.**

- **Never tow a trailer without using a safety chain securely attached to both the trailer and the vehicle. If damage occurs to the coupling unit or hitch ball, there is danger of the trailer wandering over into another lane.**

TIRES

- Ensure that your vehicle's tires are properly inflated. See page 377 in Section 7–2 and page 402 in Section 8 for instructions.
- The trailer tires should be inflated to the pressure recommended by the trailer manufacturer in respect to the total trailer weight.

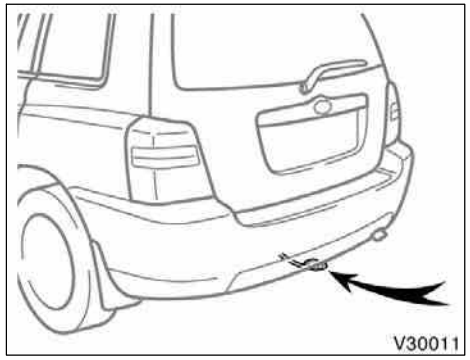

TRAILER LIGHTS

- Your vehicle is equipped with a wire harness stored in the rear end under body. Some models are fitted with a socket for trailer lights under the rear bumper. Use either of them to connect and operate the trailer lights. However, the trailer lights must comply with federal, state/provincial and local regulations. See your local recreational vehicle dealer or rental agency for the correct type of wiring and relays for your trailer. Check for correct operation of the turn signals and stop lights each time you hitch up. Direct splicing may damage your vehicle's electrical system and cause a malfunction of your lights.

BREAK–IN SCHEDULE

- Toyota recommends that you do not tow a trailer with a new vehicle or a vehicle with any new power train component (engine, transmission, differential, wheel bearings, etc.) for the first 800 km (500 miles) of driving.

MAINTENANCE

- If you tow a trailer, your vehicle will require more frequent maintenance due to the additional load. For this information, please refer to the scheduled maintenance information in the "Scheduled Maintenance Guide" or "Owner's Manual Supplement".
- Retighten all fixing bolts of the towing ball and bracket after approximately 1000 km (600 miles) of trailer driving.

PRE–TOWING SAFETY CHECK

- Check that your vehicle remains level when a loaded or unloaded trailer is hitched. Do not drive if the vehicle has an abnormal nose–up or nose–down condition, and check for improper tongue load, overload, worn suspension or other possible causes.
- Make sure the trailer cargo is securely loaded so that it cannot shift.
- Check that your rear view mirrors conform to any applicable federal, state/provincial or local regulations. If not, install the rear view mirrors required for towing purposes.

TRAILER TOWING TIPS

When towing a trailer, your vehicle will handle differently than when not towing. The three main causes of vehicle–trailer accidents are driver error, excessive speed and improper trailer loading. Keep these in mind when towing:

- Before starting out, check operation of the lights and all vehicle–trailer connections. After driving a short distance, stop and recheck the lights and connections. Before actually towing a trailer, practice turning, stopping and backing with a trailer in an area away from traffic until you learn the feel.
- Backing with a trailer is difficult and requires practice. Grip the bottom of the steering wheel and move your hand to the left to move the trailer to the left. Move your hand to the right to move the trailer to the right. (This procedure is generally opposite to that when backing without a trailer.) Also, just turn the steering wheel a little at a time, avoiding sharp or prolonged turning. Have someone guide you when backing to reduce the risk of an accident.
- Because stopping distance may be increased, vehicle–to–vehicle distance should be increased when towing a trailer. For each 16 km/h (10 mph) of speed, allow at least one vehicle and trailer length between you and the vehicle ahead. Avoid sudden braking as you may skid, resulting in jackknifing and loss of control. This is especially true on wet or slippery surfaces.
- Avoid jerky starts or sudden acceleration.
- Avoid jerky steering and sharp turns. The trailer could hit your vehicle in a tight turn. Slow down before making a turn to avoid the necessity of sudden braking.

- Remember that when making a turn, the trailer wheels will be closer than the vehicle wheels to the inside of the turn. Therefore, compensate for this by making a larger than normal turning radius with your vehicle.
- Crosswinds and rough roads will adversely affect handling of your vehicle and trailer, causing sway. Pay attention to the rear from time to time to prepare yourself for being passed by large trucks or buses, which may cause your vehicle and trailer to sway. If swaying happens, firmly grip the steering wheel and reduce speed immediately but gradually. Never increase speed. Steer straight ahead. If you make no extreme correction with the steering or brakes, the vehicle and trailer will stabilize.
- Be careful when passing other vehicles. Passing requires considerable distance. After passing a vehicle, do not forget the length of your trailer and be sure you have plenty of room before changing lanes.
- In order to maintain engine braking efficiency, do not use overdrive.
- Because of the added load of the trailer, your vehicle’s engine may overheat on hot days (at temperatures over 30°C [85°F]) when going up a long or steep grade with a trailer. If the engine coolant temperature gauge indicates overheating, immediately turn off the air conditioning (if in use), pull off the road and stop in a safe spot. Refer to “If your vehicle overheats” on page 328 in Section 4.
- Always place wheel blocks under both the vehicle and trailer wheels when parking. Apply the parking brake firmly. Put the transmission in “P”. Avoid parking on a slope with a trailer, but if it cannot be avoided, do so only after performing the following:

1. Apply the brakes and hold.
2. Have someone place wheel blocks under both the vehicle and trailer wheels.
3. When the wheel blocks are in place, release your brakes slowly until the blocks absorb the load.
4. Apply the parking brake firmly.
5. Shift into “P” and turn off the engine.

When restarting out after parking on a slope:

1. With the transmission in “P” position, start the engine. Be sure to keep the brake pedal depressed.
2. Shift into gear.
3. Release the parking brake and brake pedal and slowly pull or back away from the wheel blocks. Stop and apply your brakes.
4. Have someone retrieve the blocks.

CAUTION

- **Do not exceed 72 km/h (45 mph) or the posted towing speed limit, whichever is lower. Because instability (swaying) of a towing vehicle–trailer combination usually increases as the speed increases, exceeding 72 km/h (45 mph) may cause loss of control.**
- **Slow down and downshift before descending steep or long downhill grades. Do not make sudden downshifts.**
- **Avoid holding the brake pedal down too long or too frequently. This could cause the brakes to overheat and result in reduced braking efficiency.**

How to save fuel and make your vehicle last longer

Improving fuel economy is easy—just take it easy. It will help make your vehicle last longer, too. Here are some specific tips on how to save money on both fuel and repairs:

- **Keep your tires inflated at the correct pressure.** Underinflation causes tire wear and wastes fuel. See page 377 in Section 7–2 for instructions.
- **Do not carry unneeded weight in your vehicle.** Excess weight puts a heavier load on the engine, causing greater fuel consumption.
- **Avoid lengthy warm–up idling.** Once the engine is running smoothly, begin driving—but gently. Remember, however, that on cold winter days this may take a little longer.
- **Keep the automatic transmission overdrive turned on when engine braking is not required.** Driving with the overdrive off will reduce the fuel economy. (For details, see “Automatic transmission” on page 141 in Section 1–7.)
- **Accelerate slowly and smoothly.** Avoid jackrabbit starts. Get into high gear as quickly as possible.
- **Avoid long engine idling.** If you have a long wait and you are not in traffic, it is better to turn off the engine and start again later.
- **Avoid engine lugging or over–revving.** Use a gear position suitable for the road on which you are travelling.
- **Avoid continuous speeding up and slowing down.** Stop–and–go driving wastes fuel.
- **Avoid unnecessary stopping and braking.** Maintain a steady pace. Try to time the traffic signals so you only need to stop as little as possible or take advantage of through streets to avoid traffic lights. Keep a proper distance from other vehicles to avoid sudden braking. This will also reduce wear on your brakes.
- **Avoid heavy traffic or traffic jams whenever possible.**
- **Do not rest your foot on the brake pedal.** This causes premature wear, overheating and poor fuel economy.
- **Maintain a moderate speed on highways.** The faster you drive, the greater the fuel consumption. By reducing your speed, you will cut down on fuel consumption.

- **Keep the front wheels in proper alignment.** Avoid hitting the curb and slow down on rough roads. Improper alignment not only causes faster tire wear but also puts an extra load on the engine, which, in turn, wastes fuel.
- **Keep the bottom of your vehicle free from mud, etc.** This not only lessens weight but also helps prevent corrosion.
- **Keep your vehicle tuned–up and in top shape.** A dirty air cleaner, improper valve clearance, dirty plugs, dirty oil and grease,brakes not adjusted, etc. all lower engine performance and contribute to poor fuel economy. For longer life of all parts and lower operating costs, keep all maintenance work on schedule, and if you often drive under severe conditions, see that your vehicle receives more frequent maintenance. (For scheduled maintenance information, please refer to the "Scheduled Maintenance Guide" or "Owner's Manual Supplement".)

⚠ CAUTION

Never turn off the engine to coast down hills. Your power steering and brake booster will not function without the engine running. Also, the emission control system operates properly only when the engine is running.

SECTION 4

IN CASE OF AN EMERGENCY

In case of an emergency

If your vehicle will not start 324
If your engine stalls while driving 327
If you cannot increase the engine speed 327
If your vehicle overheats 328
If you have a flat tire 329
If your vehicle becomes stuck 340
If your vehicle needs to be towed 341
If you cannot shift automatic transmission selector lever 346
If you lose your keys 346
If you lose your wireless remote control transmitter 347

If your vehicle will not start—
(a) Simple checks

Before making these checks, make sure you have followed the correct starting procedure given in “How to start the engine” on page 310 in Section 3 and that you have sufficient fuel. If your vehicle is equipped with the engine immobilizer system, also check whether the other keys will start the engine. If they work, your key may be broken. Have the key checked at your Toyota dealer. If none of your keys work, there may be a malfunction in the immobilizer system. Call your Toyota dealer. (See “Keys (with engine immobilizer system)” on page 12 in Section 1–2.)

If the engine is not turning over or is turning over too slowly—

1. Check that the battery terminals are tight and clean.
2. If the battery terminals are O.K., switch on the interior light.
3. If the light is out, dim or goes out when the starter is cranked, the battery is discharged. You may try jump starting. See “(c) Jump starting” on page 325 for further instructions.

If the light is O.K., but the engine still will not start, it needs adjustment or repair. Call a Toyota dealer or qualified repair shop.

NOTICE

Do not pull–or push–start the vehicle. It may damage the vehicle or cause a collision when the engine starts. Also the three–way catalytic converter may overheat and become a fire hazard.

If the engine turns over at its normal speed but will not start—

1. Turn the ignition key to “ACC” or “LOCK” and try starting the engine again.
2. If the engine will not start, the engine may be flooded because of repeated cranking. See “(b) Starting a flooded engine” on page 324 for further instructions.
3. If the engine still will not start, it needs adjustment or repair. Call a Toyota dealer or qualified repair shop.

(b) Starting a flooded engine

If the engine will not start, your engine may be flooded because of repeated cranking.

If this happens, turn the key to “START” with the accelerator pedal fully depressed. Keep the key and accelerator pedal in these positions for 15 seconds and release them. Then try starting the engine with your foot off the accelerator pedal.

If the engine does not start after 15 seconds of cranking, release the key, wait a few minutes and try again.

If the engine still will not start, it needs adjustment or repair. Call a Toyota dealer or qualified repair shop for assistance.

NOTICE

Do not crank for more than 30 seconds at a time. This may overheat the starter and wiring systems.

(c) Jump starting

To avoid serious personal injury and damage to your vehicle which might result from battery explosion, acid burns, electrical burns, or damaged electronic components, these instructions must be followed precisely.

If you are unsure about how to follow this procedure, we strongly recommend that you seek the help of a competent mechanic or towing service.

⚠ CAUTION

- **Batteries contain sulfuric acid which is poisonous and corrosive. Wear protective safety glasses when jump starting, and avoid spilling acid on your skin, clothing, or vehicle.**
- **If you should accidentally get acid on yourself or in your eyes, remove any contaminated clothing and flush the affected area with water immediately. Then get immediate medical attention. If possible, continue to apply water with a sponge or cloth while en route to the medical office.**
- **The gas normally produced by a battery will explode if a flame or spark is brought near. Use only standardized jumper cables and do not smoke or light a match while jump starting.**

NOTICE

The battery used for boosting must be 12 V. Do not jump start unless you are sure that the booster battery is correct.

JUMP STARTING PROCEDURE

1. If the booster battery is installed in another vehicle, make sure the vehicles are not touching. Turn off all unnecessary lights and accessories.
2. If required, remove all the vent plugs from the booster and discharged batteries. Lay a cloth over the open vents on the batteries. (This helps reduce the explosion hazard, personal injuries and burns.)
3. If the engine in the vehicle with the booster battery is not running, start it and let it run for a few minutes. During jump starting, run the engine at about 2000 rpm with the accelerator pedal lightly depressed.

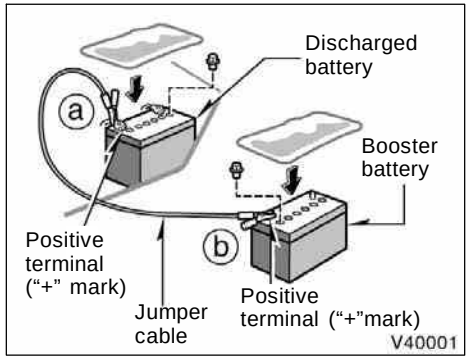

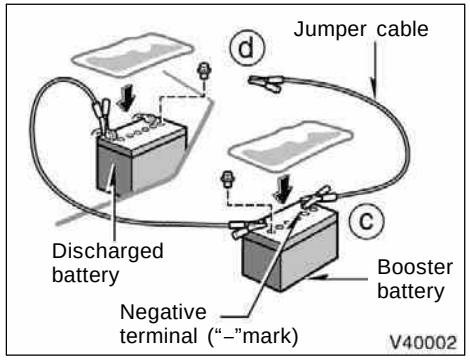

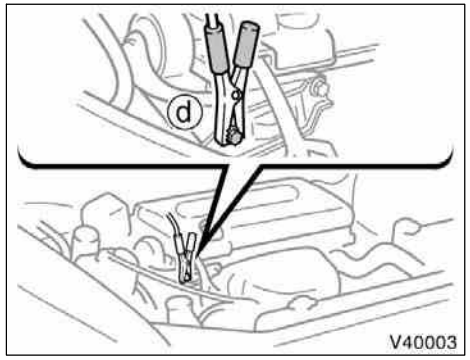

Connecting point for 2AZ–FE engine

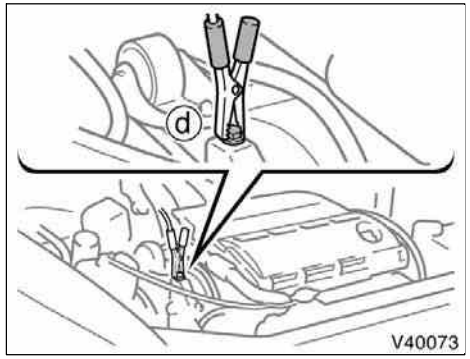

Connecting point for 3MZ–FE engine

4. Make the cable connections in the order a, b, c, d.

   a. Connect the clamp of the positive (red) jumper cable to the positive (+) terminal on the discharged battery.

   b. Connect the clamp at the other end of the positive (red) jumper cable to the positive (+) terminal on the booster battery.

   c. Connect the clamp of the negative (black) jumper cable to the negative (–) terminal on the booster battery.

   d. Connect the clamp at the other end of the negative (black) jumper cable to a solid, stationary, unpainted, metallic point of the vehicle with the discharged battery.

   The recommended connecting points are shown in the following illustrations:

Do not connect it to or near any part that moves when the engine is cranked.

CAUTION

When making the connections, to avoid serious injury, do not lean over the battery or accidentally let the jumper cables or clamps touch anything except the correct battery terminals or the ground.

5. Start your engine in the normal way. After starting, run it at about 2000 rpm for several minutes with the accelerator pedal lightly depressed.
6. Carefully disconnect the cables in the exact reverse order: the negative cable and then the positive cable.
7. Carefully dispose of the battery cover cloths—they may now contain sulfuric acid.
8. If removed, replace all the battery vent plugs.

If the cause of your battery discharging is not apparent (for example, lights left on), you should have it checked at your Toyota dealer.

If your engine stalls while driving

If your engine stalls while driving...

1. Reduce your speed gradually, keeping a straight line. Move cautiously off the road to a safe place.
2. Turn on your emergency flashers.
3. Turn the ignition key to “ACC” or “LOCK”, and try starting the engine again.

If the engine will not start, see “If your vehicle will not start” on page 324 in this Section.

CAUTION

If the engine is not running, the power assist for the brakes and steering will not work so steering and braking will be much harder than usual.

If you cannot increase the engine speed

If the engine speed does not increase with the accelerator pedal depressed down, there may be a problem somewhere in your electronic throttle control system.

At this time, vibration may occur. However, if you depress the accelerator pedal more firmly and slowly, you can drive your vehicle at low speeds. Have your vehicle checked by your Toyota dealer as soon as possible.

Even if the abnormality of the electronic throttle control system is corrected during low speed driving, the system may not be recovered until the engine is stopped and the ignition key is turned to “ACC” or “LOCK” position.

CAUTION

Be especially careful to prevent erroneous pedal operation.

If your vehicle overheats

If your engine coolant temperature gauge indicates overheating, if you experience a loss of power, or if you hear a loud knocking or pinging noise, the engine has probably overheated. You should follow this procedure...

1. Pull safely off the road, stop the vehicle and turn on your emergency flashers. Put the transmission in “P” and apply the parking brake. Turn off the air conditioning if it is being used.
2. If coolant or steam is boiling out of the radiator or reservoir, stop the engine. Wait until the steam subsides before opening the hood. If there is no coolant boiling over or steam, leave the engine running and make sure the electric cooling fan is operating. If it is not, turn the ignition off.

CAUTION

To help avoid personal injury, keep the hood closed until there is no steam. Escaping steam or coolant is a sign of very high pressure.

3. Look for obvious coolant leaks from the radiator, hoses, and under the vehicle. However, note that water draining from the air conditioning is normal if it has been used.

CAUTION

When the engine is running, keep hands and clothing away from the moving fan and engine drive belts.

4. If the coolant is leaking, stop the engine immediately. Call a Toyota dealer for assistance.
5. If there are no obvious leaks, check the coolant reservoir. If it is dry, add coolant to the reservoir while the engine is running. Fill it about half full.

CAUTION

Do not attempt to remove the radiator cap when the engine and radiator are hot. Serious injury could result from scalding hot fluid and steam blown out under pressure.

6. After the engine coolant temperature has cooled to normal, again check the coolant level in the reservoir. If necessary, bring it up to half full again. Serious coolant loss indicates a leak in the system. You should have it checked as soon as possible at your Toyota dealer.

If you have a flat tire—

1. Reduce your speed gradually, keeping a straight line. Move cautiously off the road to a safe place well away from the traffic. Avoid stopping on the center divider of a highway. Park on a level spot with firm ground.
2. Stop the engine and turn on your emergency flashers.
3. Firmly set the parking brake and put the transmission in “P”.
4. Have everyone get out of the vehicle on the side away from traffic.
5. Read the following instructions thoroughly.

⚠ CAUTION

When jacking, be sure to observe the following to reduce the possibility of personal injury:

- **Follow jacking instructions.**
- **Do not put any part of your body under the vehicle supported by the jack. Otherwise, personal injury may occur.**
- **Do not start or run the engine while your vehicle is supported by the jack.**
- **Stop the vehicle on a level firm ground, firmly set the parking brake and put the transmission in “P”. Block the wheel diagonally opposite to the one being changed if necessary.**
- **Make sure to set the jack properly in the jack point. Raising the vehicle with jack improperly positioned will damage the vehicle or may allow the vehicle to fall off the jack and cause personal injury.**
- **Never get under the vehicle when the vehicle is supported by the jack alone.**
- **Use the jack only for lifting your vehicle during wheel changing.**
- **Do not raise the vehicle with someone in the vehicle.**
- **When raising the vehicle, do not place any objects on top of or underneath the jack.**
- **Raise the vehicle only high enough to remove and change the tire.**

NOTICE

Do not continue driving with a deflated tire. Driving even a short distance can damage a tire and wheel beyond repair.

—Required tools and spare tire

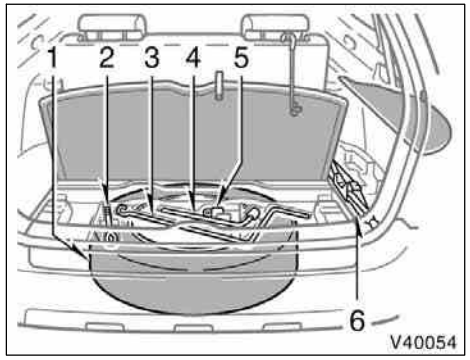

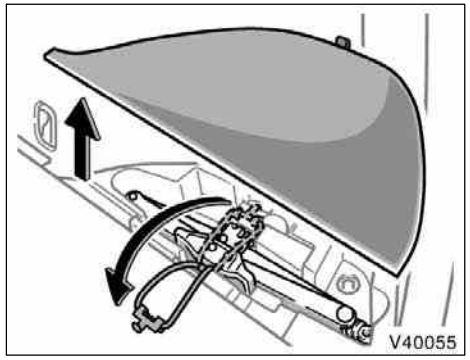

1. **Get the required tools and spare tire.**
   1. Spare tire
   2. Front towing eyelet
   3. Jack handle
   4. Wheel nut wrench
   5. Adapter socket
   6. Jack

To prepare yourself for an emergency, you should familiarize yourself with the use of the jack, each of the tools and their storage locations.

Before removing the jack, remove the right side deck board and unhook the tightening strap.

After storing the jack, make sure it is securely held by the tightening strap.

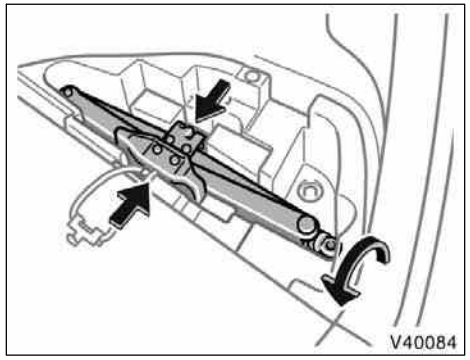

To remove the jack, rotate the jack joint by hand until the jack becomes free.

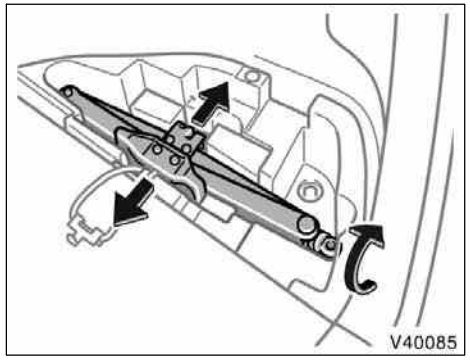

To store the jack, rotate the jack joint until the jack is firmly secured.

This prevents the jack from flying forward during a collision or sudden stop.

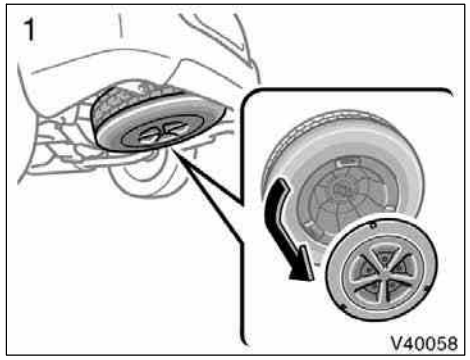

To detach the spare tire:

1. Vehicles with aluminium wheels—Remove the inside spare tire cover by turning it counterclockwise.

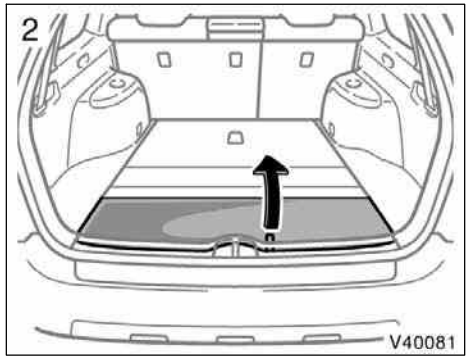

2. Pull the strap and open the center deck board.

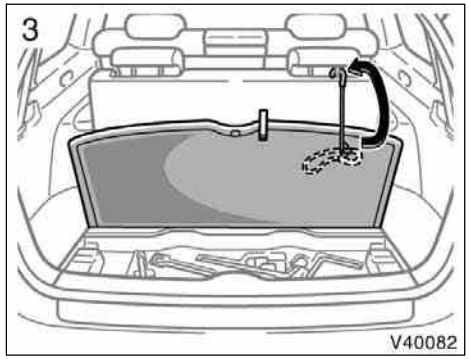

3. Vehicles with third seat—

   If the third seat is upright, hang the center deck board on the right–side head restraint.

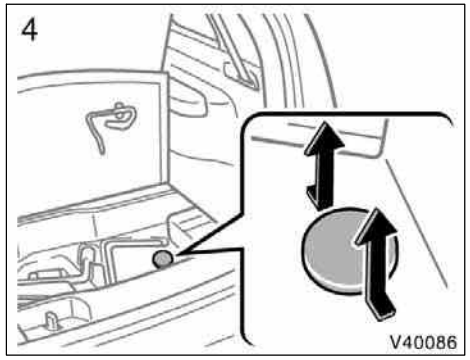

4. Remove the cover as shown in the illustration.

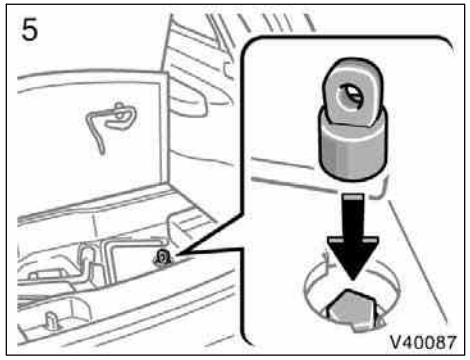

5. Put the adapter socket (for removing a spare tire) on the spare tire clamp bolt.

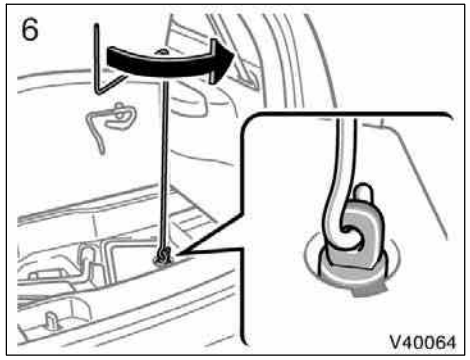

6. Threading the jack handle through the adapter socket, turn the jack handle counterclockwise. Continue until the spare tire is lowered completely to the ground.

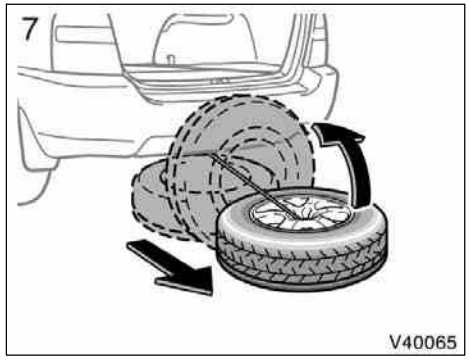

7. Pull out the spare tire and stand it up against the bumper.

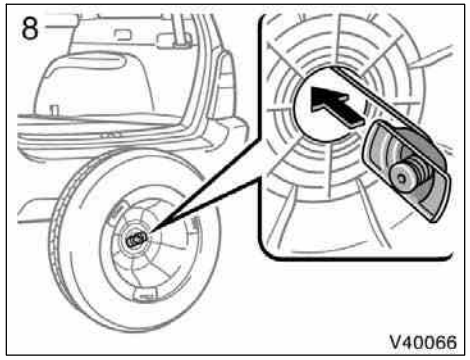

8. Remove the holding bracket.

   Vehicles with aluminium wheels—Remove the spare tire cover.

—Blocking the wheel

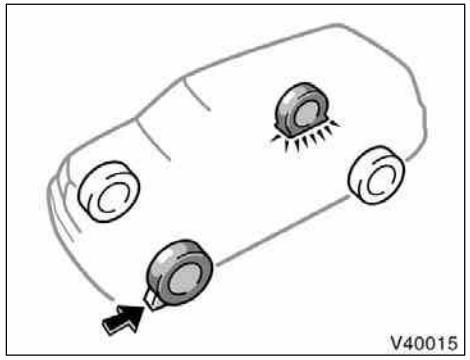

2. **Block the wheel diagonally opposite the flat tire to keep the vehicle from rolling when it is jacked up.**

When blocking the wheel, place a wheel block in front of one of the front wheels or behind one of the rear wheels.

—Removing wheel ornament

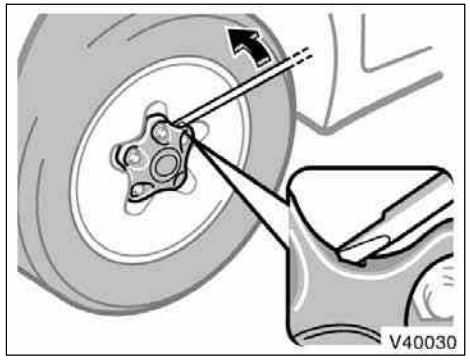

Type A

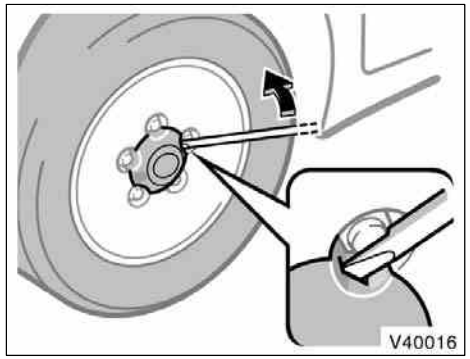

Type B

3. Remove the wheel ornament.

Pry off the wheel ornament, using the beveled end of the wheel nut wrench as shown.

⚠ CAUTION

Do not try to pull off the ornament by hand. Take due care in handling the ornament to avoid unexpected personal injury.

—Loosening wheel nuts

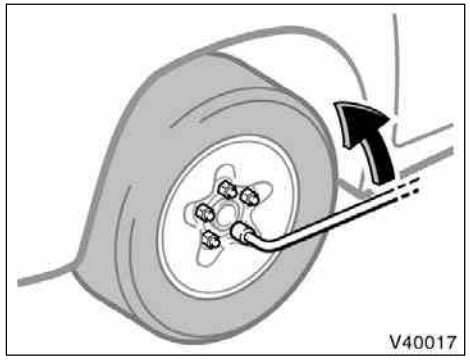

4. Loosen all the wheel nuts.

Always loosen the wheel nuts before raising the vehicle.

Turn the wheel nuts counterclockwise to loosen. To get maximum leverage, fit the wrench to the nut so that the handle is on the right side, as shown above. Grab the wrench near the end of the handle and pull up on the handle. Be careful that the wrench does not slip off the nut.

Do not remove the nuts yet—just unscrew them about one–half turn.

⚠ CAUTION

Never use oil or grease on the bolts or nuts. The nuts may loose and the wheels may fall off, which could cause a serious accident.

—Positioning the jack

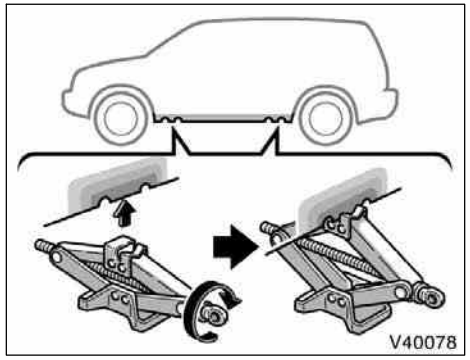

5. Position the jack at the correct jack point as shown.

Make sure the jack is positioned on a level and solid place.

—Raising your vehicle

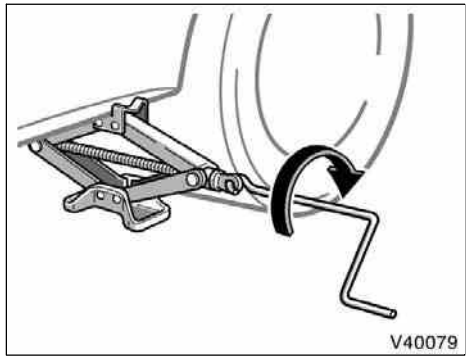

6. After making sure that no one is in the vehicle, raise it high enough so that the spare tire can be installed.

Remember you will need more ground clearance when putting on the spare tire than when removing the flat tire.

To raise the vehicle, insert the jack handle into the jack (it is a loose fit) and turn it clockwise. As the jack touches the vehicle and begins to lift, double–check that it is properly positioned.

⚠ CAUTION

Never get under the vehicle when the vehicle is supported by the jack alone.

—Changing wheels

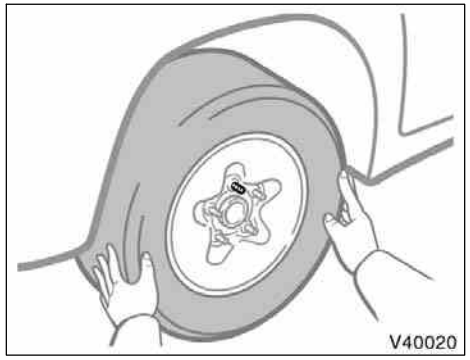

7. Remove the wheel nuts and change tires.

Lift the flat tire straight off and put it aside.

Roll the spare wheel into position and align the holes in the wheel with the bolts. Then lift up the wheel and get at least the top bolt started through its hole. Wiggle the tire and press it back over the other bolts.

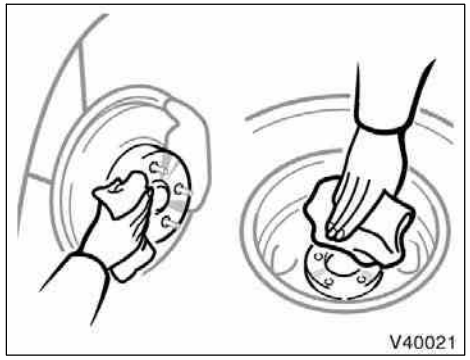

Before putting on wheels, remove any corrosion on the mounting surfaces with a wire brush or such. Installation of wheels without good metal–to–metal contact at the mounting surface can cause wheel nuts to loosen and eventually cause a wheel to come off while driving.

—Reinstalling wheel nuts

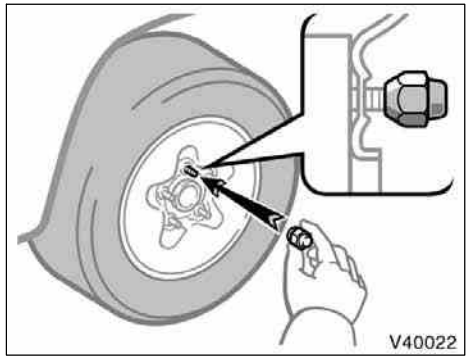

8. Reinstall all the wheel nuts finger tight.

Reinstall the wheel nuts (tapered end inward) and tighten them as much as you can by hand. Press back on the tire back and see if you can tighten them more.

CAUTION

Never use oil or grease on the bolts or nuts. Doing so may lead to overtightening the nuts and damaging the bolts. The nuts may loose and the wheels may fall off, which could cause a serious accident. If there is oil or grease on any bolt or nut, clean it.

—Lowering your vehicle

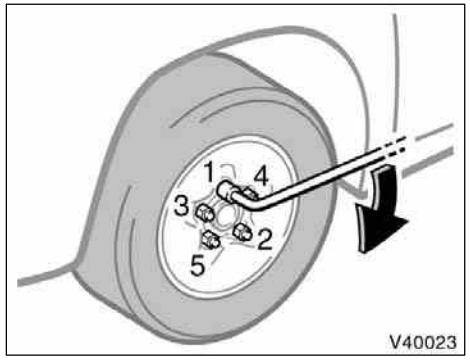

9. Lower the vehicle completely and tighten the wheel nuts.

Turn the jack handle counterclockwise to lower the vehicle.

Use only the wheel nut wrench and turn it clockwise to tighten the nuts. Do not use other tools or any additional leverage other than your hands, such as a hammer, pipe or your foot. Make sure the wrench is securely engaged over the nut.

Tighten each nut a little at a time in the order shown. Repeat the process until all the nuts are tight.

CAUTION

- **When lowering the vehicle, make sure all portions of your body and all other persons around will not be injured as the vehicle is lowered to the ground.**
- **Have the wheel nuts tightened with torque wrench to 103 N·m (10.5 kgf·m, 76 ft·lbf), as soon as possible after changing wheels. Otherwise, the nuts may loosen and the wheels may fall off, which could cause a serious accident.**

—Reinstalling wheel ornament

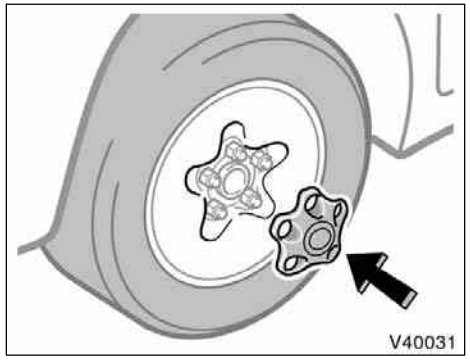

Type A

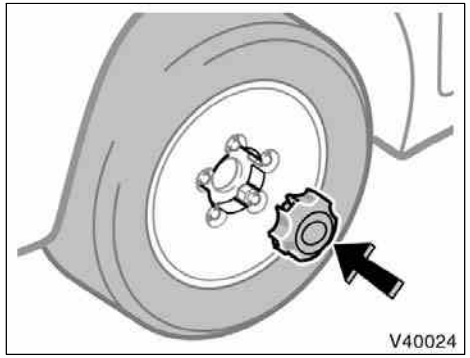

Type B

10. Reinstall the wheel ornament.

1. Put the wheel ornament into position.
2. Then tap it firmly with the side or heel of your hand to snap it into place.

⚠ CAUTION

Take due care in handling the ornament to avoid unexpected personal injury.

—After changing wheels

11. Check the air pressure of the replaced tire.

Adjust the air pressure to the specification designated on page 402 in Section 8. If the pressure is lower, drive slowly to the nearest service station and fill to the correct pressure.

Do not forget to reinstall the tire inflation valve cap as dirt and moisture could get into the valve core and possibly cause air leakage. If the cap is missing, have a new one put on as soon as possible.

12. Restow all the tools, jack and flat tire securely.

As soon after changing wheels as possible, tighten the wheel nuts to the torque specified on page 402 in Section 8 with a torque wrench. Have a technician repair the flat tire and replace the spare tire with it.

Initial adjustment of the tire pressure warning system is necessary after you have replaced your tires or wheels. See “Tire pressure warning system” on page 155 in Section 1–7.

CAUTION

Before driving, make sure all the tools, jack and flat tire are securely in place in their storage location to reduce the possibility of personal injury during a collision or sudden braking.

If your vehicle becomes stuck

If your vehicle becomes stuck in snow, mud, sand, etc., then you may attempt to rock the vehicle free by moving it forward and backward.

Two–wheel drive models—
Turn off the traction control system to become unstuck to allow the tires to spin enough to remove the vehicle from the obstruction. (For details, see “Traction control system (two–wheel drive models)” on page 150 in Section 1–7.)

CAUTION

Do not attempt to rock the vehicle free by moving it forward and backward if people or objects are anywhere near the vehicle. During the rocking operation the vehicle may suddenly move forward or backward as it becomes unstuck, causing injury or damage to nearby people or objects.

NOTICE

If you rock your vehicle, observe the following precautions to prevent damage to the transmission and other parts.

- ***Do not depress the accelerator pedal while shifting the selector lever or before the transmission is completely shifted to forward or reverse gear.***
- ***Do not race the engine and avoid spinning the wheels.***
- ***If your vehicle remains stuck after rocking the vehicle several times, consider other ways such as towing.***

If your vehicle needs to be towed—

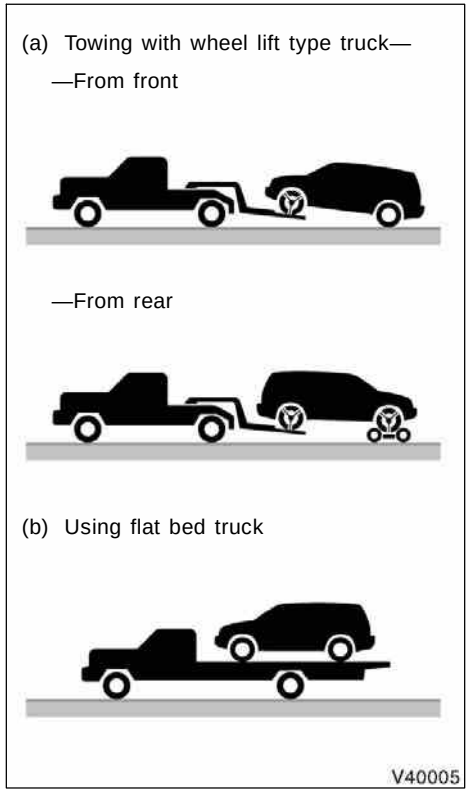

Two–wheel drive models

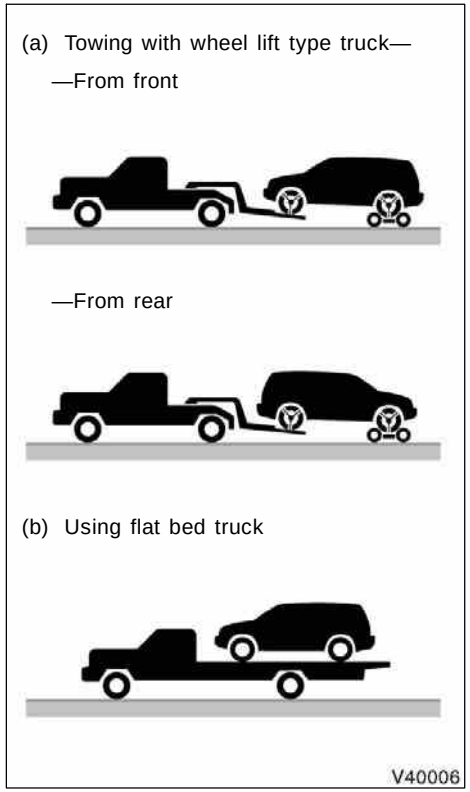

Four–wheel drive models

If towing is necessary, we recommend you to have it done by your Toyota dealer or a commercial tow truck service. In consultation with them, have your vehicle towed using either (a) or (b).

Only when you cannot receive a towing service from a Toyota dealer or commercial tow truck service, tow your vehicle carefully in accordance with the instructions given in “—Emergency towing” on page 343 in this Section.

Proper equipment will help ensure that your vehicle is not damaged while being towed. Commercial operators are generally aware of the state/provincial and local laws pertaining to towing.

Your vehicle can be damaged if it is towed incorrectly. Although most operators know the correct procedure, it is possible to make a mistake. To avoid damage to your vehicle, make sure the following precautions are observed. If necessary, show this page to the tow truck driver.

TOWING PRECAUTIONS:

Use a safety chain system for all towing, and abide by the state/provincial and local laws. The wheels and axle on the ground must be in good condition. If they are damaged, use a towing dolly.

Two–wheel drive models—

(a) Towing with wheel lift type truck

From front—Release the parking brake.

NOTICE
When lifting wheels, take care to ensure adequate ground clearance for towing at the opposite end of the raised vehicle. Otherwise, the bumper and/or underbody of the towed vehicle will be damaged during towing.

From rear—

Use a towing dolly under the front wheels.

NOTICE
Never tow a vehicle from the rear with the front wheels on the ground, as this may cause serious damage to the transmission.

(b) Using flat bed truck

Four–wheel drive models—

(a) Towing with wheel lift type truck

Use a towing dolly under the wheels not lifted by the truck.

(b) Using flat bed truck

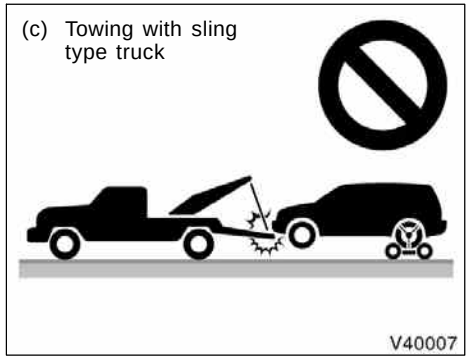

All models—

(c) Towing with sling type truck

NOTICE
Do not tow with sling type truck, either from the front or rear. This may cause body damage.

—Emergency towing

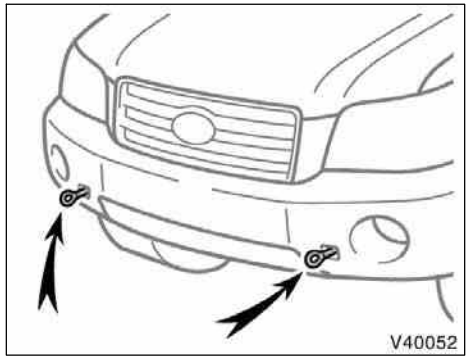

If towing is necessary, we recommend you to have it done by your Toyota dealer or a commercial tow truck service.

If towing service is not available in an emergency, your vehicle may be temporarily towed by a cable or chain secured to one of the emergency towing eyelets on the front of the vehicle. Use extreme caution when towing the vehicle.

To install the front towing eyelet, see “—Installing front towing eyelet” on page 344 in this Section.

NOTICE

- ***Only use specified towing eyelet; otherwise your vehicle may be damaged.***
- ***Never tow a vehicle from the rear with four wheels on the ground. This may cause serious damage to the transmission.***

A driver must be in the vehicle to steer it and operate the brakes.

Towing in this manner may be done only on hard–surfaced roads for a short distance and at low speeds. Also, the wheels, axles, drive train, steering and brakes must all be in good condition.

⚠ CAUTION

Use extreme caution when towing vehicles. Avoid sudden starts or erratic driving maneuvers which would place excessive stress on the emergency towing eyelet and towing cable or chain. The eyelet and towing cable or chain may break and cause serious injury or damage.

NOTICE

Use only a cable or chain specifically intended for use in towing vehicles. Securely fasten the cable or chain to the towing eyelet provided.

Before towing, release the parking brake and put the transmission in “N”. The key must be in “ACC” (engine off) or “ON” (engine running).

⚠ CAUTION

If the engine is not running, the power assist for the brakes and steering will not work so steering and braking will be much harder than usual.

—Installing front towing eyelet

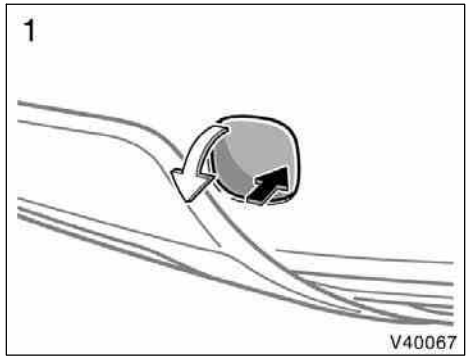

1. Remove the front towing eyelet cover on the front bumper by pushing the outside of the cover.

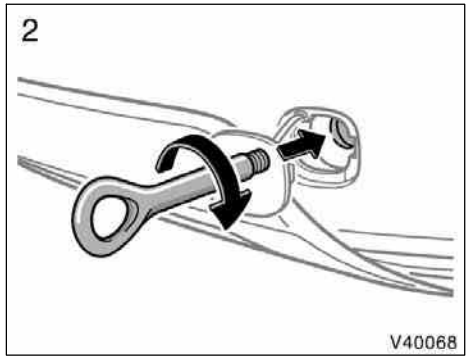

2. Use the front towing eyelet in the luggage compartment. Secure it to the hole on the bumper by turning clockwise. (For the towing eyelet location, see “—Required tools and spare tire” on page 330 in this Section.)

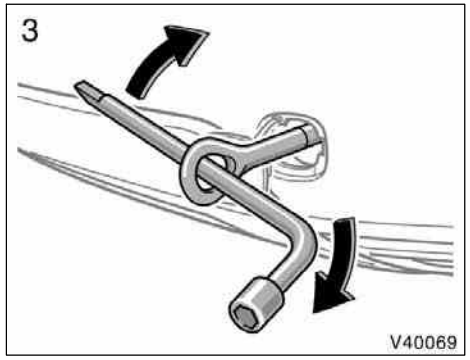

3. Tighten the front towing eyelet securely by a wheel nut wrench.

⚠ CAUTION

When installing the eyelet on the vehicle, be sure to tighten the front eyelet securely. If the eyelet is loose, it may come off when being towed and result in death or serious injury.

—Emergency towing eyelet precautions

- Before emergency towing, check that the eyelet is not broken or damaged and that the installation bolts are not loose.
- Fasten the towing cable or chain securely to the eyelet.
- Do not jerk the eyelet. Apply steady and even force.
- To avoid damaging the eyelet, do not pull from the side or at a vertical angle. Always pull straight ahead.

CAUTION

If the emergency towing eyelet is used to get out when your vehicle becomes struck in mud, sand or other condition from which the vehicle cannot be driven out under its own power, make sure to observe the precautions mentioned below. Otherwise, excessive stress will be put on the eyelet and the towing cable or chain may break, causing serious injury or damage.

- **If the towing vehicle can hardly move, do not forcibly continue the towing. Contact your Toyota dealer or a commercial tow truck service for assistance.**
- **Tow the vehicle as straight ahead as possible.**
- **Keep away from the vehicle during towing.**

—Tips for towing a stuck vehicle

The following methods are effective to get out when your vehicle is struck in mud, sand or other condition from which the vehicle cannot be driven out under its own power. Use extreme caution when towing vehicles. In addition, keep away from the vehicles and towing cable or chain when towing.

- Remove the soil and sand in the front and the back of the tires.
- Place a stone or wood under the tires.

If you cannot shift automatic transmission selector lever

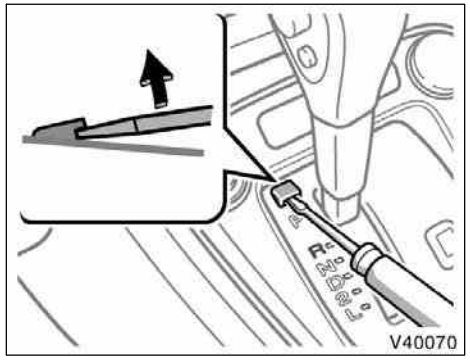

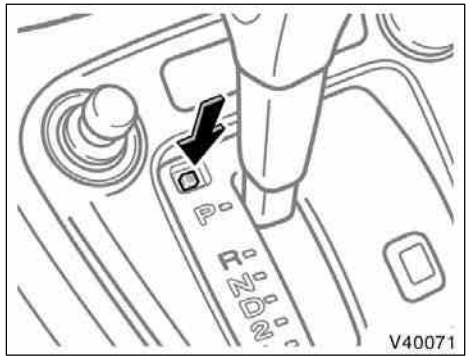

If you cannot shift the selector lever out of the “P” position to other positions even though the brake pedal is depressed, use the shift lock override button as follows:

1. **Turn the ignition key to the “LOCK” position. Make sure the parking brake is applied.**
2. **Pry up the cover with a flat–bladed screwdriver or equivalent.**
3. **Insert your finger into the hole to push down the shift lock override button. You can shift out of the “P” position only while pushing the button.**
4. **Shift into the “N” position.**
5. **Insert the cover.**
6. **Start the engine. For your safety, keep the brake pedal depressed.**

Be sure to have the system checked by your Toyota dealer as soon as possible.

If you lose your keys

You can purchase a new key at your Toyota dealer if you can give them the key number. If your vehicle is equipped with the engine immobilizer system, the dealer will also need your master key.

Vehicles with engine immobilizer system—Even if you lose only one key, contact your Toyota dealer to make a new key. If you lose all your master keys, you cannot make new keys; the whole engine immobilizer system must be replaced.

See the suggestion given in “Keys” on page 12 in Section 1–2.

If your keys are locked in the vehicle and you cannot get a duplicate, many Toyota dealers can still open the door for you, using their special tools. If you must break a window to get in, we suggest breaking the smallest side window because it is the least expensive to replace. Be extremely cautious to avoid cuts from the glass.

If you lose your wireless remote control transmitter

You can purchase a new wireless remote control transmitter at your Toyota dealer.

Have the registered identification numbers of your transmitters deleted from your vehicle by your Toyota dealer as soon as possible to avoid the possibility of theft or an accident. Then, have the identification number of your new transmitter registered. At the same time, you must bring all of the remaining transmitters to have them registered again as well.

You can use the wireless remote control system with the new transmitter. Contact your Toyota dealer for detailed information.

SECTION 5

CORROSION PREVENTION AND APPEARANCE CARE

Corrosion prevention and appearance care

Protecting your Toyota from corrosion 350
Washing and waxing your Toyota 351
Cleaning the interior 353

Protecting your Toyota from corrosion

Toyota, through the diligent research, design and use of the most advanced technology available, helps prevent corrosion and provides you with the finest quality vehicle construction. Now, it is up to you. Proper care of your Toyota can help ensure long–term corrosion prevention.

The most common causes of corrosion to your vehicle are:

- The accumulation of road salt, dirt and moisture in hard–to–reach areas under the vehicle.
- Chipping of paint, or undercoating caused by minor accidents or by stones and gravel.

Care is especially important if you live in particular areas or operate your vehicle under certain environmental conditions:

- Road salt or dust control chemicals will accelerate corrosion, as will the presence of salt in the air near the sea–coast or in areas of industrial pollution.
- High humidity accelerates corrosion especially when temperatures range just above the freezing point.
- Wetness or dampness to certain parts of your vehicle for an extended period of time, may cause corrosion even though other parts of the vehicle may be dry.
- High ambient temperatures can cause corrosion to those components of the vehicle which do not dry quickly due to lack of proper ventilation.

The above signifies the necessity to keep your vehicle, particularly the underside, as clean as possible and to repair any damage to paint or protective coatings as soon as possible.

To help prevent corrosion on your Toyota, follow these guidelines:

Wash your vehicle frequently. It is, of course, necessary to keep your vehicle clean by regular washing, but to prevent corrosion, the following points should be observed:

- If you drive on salted roads in the winter or if you live near the ocean, you should hose off the undercarriage at least once a month to minimize corrosion.
- High pressure water or steam is effective for cleaning the vehicle’s underside and wheel housings. Pay particular attention to these areas as it is difficult to see all the mud and dirt. It will do more harm than good to simply wet the mud and debris without removing. The lower edge of doors, rocker panels and frame members have drain holes which should not be allowed to clog with dirt as trapped water in these areas can cause corrosion.
- Wash the underside of the vehicle thoroughly when winter is over.

See “Washing and waxing your Toyota” on page 351 for more tips.

Check the condition of your vehicle’s paint and trim. If you find any chips or scratches in the paint, touch them up immediately to prevent corrosion from starting. If the chips or scratches have gone through the bare metal, have a qualified body shop make the repair.

Check the interior of your vehicle. Water and dirt can accumulate under the floor mats and could cause corrosion. Occasionally check under the mats to make sure the area is dry. Be particularly careful when transporting chemicals, cleansers, fertilizers, salt, etc.; these should be transported in proper containers. If a spill or leak should occur, immediately clean and dry the area.

Use mud shields on your wheels. If you drive on salted or gravel roads, mud shields help protect your vehicle. Full–size shields, which come as near to the ground as possible, are the best. We recommend that the fittings and the area where the shields are installed be treated to resist corrosion. Your Toyota dealer will be happy to assist in supplying and installing the shields if they are recommended for your area.

Keep your vehicle in a well ventilated garage or a roofed place. Do not park your vehicle in a damp, poorly ventilated garage. If you wash your vehicle in the garage, or if you drive it covered with water or snow, your garage may be so damp and it will cause corrosion. Even if your garage is heated, a wet vehicle can corrode if the ventilation is poor.

Washing and waxing your Toyota

Washing your Toyota

Keep your vehicle clean by regular washing.

The following cases may cause weakness to the paint or corrosion to the body and parts. Wash your vehicle as soon as possible.

- When driving in a coastal area
- When driving on a road sprinkled with antifreeze
- When having coal tar, tree sap, bird droppings and carcass of an insect
- When driving in the areas where there is a lot of smoke, soot, dust, iron dust and chemical substances
- When the vehicle becomes remarkably dirty with dust and mud

Hand–washing your Toyota

Work in the shade and wait until the vehicle body is not hot to the touch.

CAUTION

When cleaning under floor or chassis, be careful not to injure your hands.

1. Rinse off loose dirt with a hose. Remove any mud or road salt from the underside of the vehicle or in the wheel wells.
2. Wash with a mild car–wash soap, mixed according to the manufacturer’s instructions. Use a soft cotton mitt and keep it wet by dipping it frequently into the wash water. Do not rub hard—let the soap and water remove the dirt.

Fuel filler door: Do not apply water (high–pressure car wash, for example) at or near the fuel tank inlet with the fuel filler door opened. If the water enters the air vent, you may experience trouble with refueling or rough engine idling.

Plastic wheel ornaments: The plastic wheel ornaments are damaged easily by organic substances. If any organic substances splashes an ornament, be sure to wash it off with water and check if the ornament is damaged.

CAUTION

Do not attach the heavily damaged plastic wheel ornament. It may fly off the wheel and cause accidents while the vehicle is moving.

Aluminum wheels: Use only a mild soap or neutral detergent.

Plastic bumpers: Wash carefully. Do not scrub with abrasive cleaners. The bumper faces are soft.

Road tar: Remove with turpentine or cleaners that are marked safe for painted surfaces.

NOTICE

Do not use organic substances (gasoline, kerosene, benzine or strong solvents), which may be toxic or cause damage.

3. Rinse thoroughly—dried soap can cause streaking. In hot weather you may need to rinse each section right after you wash it.
4. To prevent water spots, dry the vehicle using a clean soft cotton towel. Do not rub or press hard—you might scratch the paint.

Automatic car wash

Your vehicle may be washed in an automatic car wash, but remember that the paint can be scratched by some type of brushes, unfiltered washing water, or the washing process itself. Scratching reduces paint durability and gloss, especially on darker colors. The manager of the car wash should be able to advise you whether the process is safe for the paint on your vehicle.

NOTICE

With mast type antenna:

To prevent damage to the antenna, make sure it is removed before driving your Toyota through an automatic car wash.

Waxing your Toyota

Polishing and waxing is recommended to maintain the original beauty of your Toyota’s finish.

Once a month or if the vehicle surface does not repel water well, apply wax.

1. Always wash and dry the vehicle before you begin waxing, even if you are using a combined cleaner and wax.
2. Use a good quality polish and wax. If the finish has become extremely weathered, use a car–cleaning polish, followed by a separate wax. Carefully follow the manufacturer’s instructions and precautions. Be sure to polish and wax the chrome trim as well as the paint.

Windshield washer nozzles: Make sure that the nozzles do not become blocked when waxing. If a nozzle becomes blocked, contact your Toyota dealer to have the vehicle serviced.

NOTICE

If a nozzle becomes blocked, do not try to clear it with a pin or other object. The nozzle will be damaged.

3. Wax the vehicle again when water does not bead but remains on the surface in large patches.

NOTICE

Always remove the plastic bumpers if your vehicle is re–painted and placed in a high heat paint waxing booth. High temperatures could damage the bumpers.

Cleaning the interior

CAUTION

- **Vehicles with side airbags:**

  Be careful not to splash water or spill liquid on the floor. This may prevent the side airbags from activating correctly, resulting in serious injury.
- **Do not wash the vehicle floor with water, or allow water to get onto the floor when cleaning the vehicle interior or exterior. Water may get into audio components or other electrical components above or under the floor carpet (or mat) and cause a malfunction; and it may cause body corrosion.**

Vinyl interior

The vinyl upholstery may be easily cleaned with a mild soap or detergent and water.

First vacuum over the upholstery to remove loose dirt. Then, using a sponge or soft cloth, apply the soap solution to the vinyl. After allowing it to soak in for a few minutes to loosen the dirt, remove the dirt and wipe off the soap with a clean damp cloth. If all the dirt do not come off, repeat the procedure. Commercial foaming–type vinyl cleaners are also available which work well. Follow the manufacturer’s instructions.

NOTICE

Do not use solvent, thinner, gasoline or window cleaner on the interior.

Carpets

Use a good foam–type shampoo to clean the carpets.

Begin by vacuuming thoroughly to remove as much dirt as possible. Several types of foam cleaners are available; some are in aerosol cans and others are powders or liquids which you mix with water to produce a foam. To shampoo the carpets, use a sponge or brush to apply the foam. Rub in overlapping circles.

Do not apply water—the best results are obtained by keeping the carpet as dry as possible. Read the shampoo instructions and follow them closely.

Seat belts

The seat belts may be cleaned with mild soap and water or with lukewarm water.

Use a cloth or sponge. As you are cleaning, check the belts for excessive wear, fraying, or cuts.

NOTICE

- ***Do not use dye or bleach on the belts—it may weaken them.***
- ***Do not use the belts until they become dry.***

Windows

The windows may be cleaned with any household window cleaner.

NOTICE

When cleaning the inside of the rear window, be careful not to scratch or damage the heater wires or connectors.

Air conditioning control panel, car audio, instrument panel, console panel, and switches

Use a soft damp cloth for cleaning.

Soak a clean soft cloth in water or lukewarm water then lightly wipe off dirt.

NOTICE

- ***Do not use organic substances (solvents, kerosene, alcohol, gasoline, etc.) or alkaline or acidic solutions. These chemicals can cause discoloring, staining or peeling of the surface.***
- ***If you use cleaners or polishing agents, make sure their ingredients do not include the substances mentioned above.***
- ***If you use a liquid car freshener, do not apply the liquid onto the vehicle’s interior surfaces. It may contain the ingredients mentioned above. Immediately clean any spill using the method mentioned above.***

Leather Interior

The leather upholstery may be cleaned with neutral detergent for wool.

Remove dirt using a soft cloth dampened with 5% solution of neutral detergent for wool. Then thoroughly wipe off all traces of detergent with a clean damp cloth.

After cleaning or whenever any part of the leather gets wet, dry with a soft clean cloth. Allow the leather to dry in a ventilated shaded area.

NOTICE

- ***If a stain should fail to come out with a neutral detergent, apply a cleaner that does not contain an organic solvent.***
- ***Never use organic substances such as benzine, alcohol or gasoline, or alkaline or acid solutions for cleaning the leather as these could cause discoloring.***
- ***Use of a nylon brush or synthetic fiber cloth, etc. may scratch the fine grained surface of the leather.***
- ***Mildew may develop on soiled leather upholstery. Be especially careful to avoid oil spots. Try to keep your upholstery always clean.***
- ***Long exposure to direct sunlight may cause the leather surface to harden and shrink. Keep your vehicle in a shaded area, especially in the summer.***
- ***The interior of your vehicle is apt to heat up on hot summer days, so avoid placing on the upholstery items made of vinyl or plastic or containing wax as these tend to stick to leather when warm.***
- ***Improper cleaning of the leather upholstery could result in discoloration or staining.***

If you have any questions about the cleaning of your Toyota, your local Toyota dealer will be pleased to answer them.

SECTION 6

VEHICLE MAINTENANCE AND CARE

Vehicle maintenance and care

Maintenance requirements 358
General maintenance 359
Does your vehicle need repairing? 361
Emissions Inspection and Maintenance (I/M) programs 362

For scheduled maintenance information, please refer to the “Scheduled Maintenance Guide” or “Owner’s Manual Supplement”.

Maintenance requirements

Your Toyota vehicle has been designed for fewer maintenance requirements with longer service intervals to save both your time and money. However, each regular maintenance, as well as day–to–day care, is more important than ever before to ensure smooth, trouble–free, safe, and economical drivings.

It is the owner’s responsibility to make sure the specified maintenance, including general maintenance service, is performed. Note that both the new vehicle and emission control system warranties specify that proper maintenance and care must be performed. See “Owner’s Warranty Information Booklet” or “Owner’s Manual Supplement” for complete warranty information.

General maintenance

General maintenance items are those day–to–day care practices that are important to your vehicle for proper operation. It is the owner’s responsibility to ensure that the general maintenance items are performed regularly.

These checks or inspections can be done either by yourself or a qualified technician, or if you prefer, your Toyota dealer will be pleased to do them at a nominal cost.

Scheduled maintenance

The scheduled maintenance items listed in the “Scheduled Maintenance Guide” or “Owner’s Manual Supplement” are those required to be serviced at regular intervals.

For details of your maintenance schedule, read the “Scheduled Maintenance Guide” or “Owner’s Manual Supplement”.

It is recommended that any replacement parts used for maintenance or for the repair of the emission control system be Toyota supplied.

The owner may elect to use non–Toyota supplied parts for replacement purposes without invalidating the emission control system warranty. However, use of replacement parts which are not of equivalent quality may impair the effectiveness of the emission control systems.

You may also elect to have maintenance, replacement, or repair of the emission control devices and system performed by any automotive repair establishment or individual without invalidating this warranty. See “Owner’s Warranty Information Booklet” or “Owner’s Manual Supplement” for complete warranty information.

Where to go for service?

Toyota technicians are well–trained specialists and are kept up to date with the latest service information through technical bulletins, service tips, and in–dealership training programs. They learn to work on Toyotas before they work on your vehicle, rather than while they are working on it.

You can be confident that your Toyota dealer’s service department performs the best job to meet the maintenance requirements on your vehicle—reliably and economically.

Your copy of the repair order is proof that all required maintenance has been performed for warranty coverage. If any problems should arise with your vehicle while under warranty, your Toyota dealer will promptly take care of it. Again, be sure to keep a copy of the repair order for any service performed on your Toyota.

What about do–it–yourself maintenance?

Many of the maintenance items are easy to do yourself if you have a little mechanical ability and a few basic automotive tools. Simple instructions for how to perform them are presented on page 363 in Section 7.

If you are a skilled do–it–yourself mechanic, the Toyota service manuals are recommended. Please be aware that do–it–yourself maintenance can affect your warranty coverage. See “Owner’s Warranty Information Booklet” or “Owner’s Manual Supplement” for the details.

General maintenance

Listed below are the general maintenance items that should be performed as frequently as specified. In addition to checking the items listed, if you notice any unusual noise, smell or vibration, you should investigate the cause or take your vehicle to your Toyota dealer or a qualified service shop immediately. It is recommended that any problem you notice be brought to the attention of your dealer or the qualified service shop for their advice.

⚠ CAUTION

Make these checks only with adequate ventilation if you run the engine.

IN THE ENGINE COMPARTMENT

Items listed below should be checked from time to time, e.g. each time when refueling.

Washer fluid

Make sure there is sufficient fluid in the tank. See page 391 in Section 7–3 for additional information.

Engine coolant level

Make sure the coolant level is between the “F” and “L” lines on the see–through reservoir when the engine is cold. See page 375 in Section 7–2 for additional information.

Radiator, condenser and hoses

Check that the front of the radiator and condenser are clean and not blocked with leaves, dirt or insects. See page 376 in Section 7–2 for additional information.

Battery electrolyte level

Your Toyota has a maintenance free battery. You do not have to add distilled water. For longer life of the battery, however, see page 388 for additional information.

Brake fluid level

Make sure the brake fluid level is correct. See page 376 in Section 7–2 for additional information.

Engine oil level

Check the level on the dipstick with the engine turned off and the vehicle parked on a level spot. See page 372 in Section 7–2 for additional information.

Power steering fluid level

Check the level through the reservoir. The level should be in the “HOT” or “COLD” range depending on the fluid temperature. See page 377 in Section 7–2 for additional information.

Exhaust system

If you notice any change in the sound of the exhaust or smell exhaust fumes, have the cause located and corrected immediately. (See “Engine exhaust cautions” on page 287 in Section 2.)

INSIDE THE VEHICLE

Items listed below should be checked regularly, e.g. while performing periodic services, cleaning the vehicle, etc.

Lights

Make sure the headlights, stop lights, tail lights, turn signal lights, and other lights are all working. Check headlight aim.

Service reminder indicators and warning buzzers

Check that all service reminder indicators and warning buzzers function properly.

Steering wheel

Check that it has the specified free play. Be alert for changes in steering condition, such as hard steering or strange noise.

Seats

Check that all seat controls such as seat adjusters, seatback recliner, etc. operate smoothly and that all latches lock securely in any position. Check that the head restraints move up and down smoothly and that the locks hold securely in any latched position. For folding–down rear seatbacks, check that the latches lock securely.

Seat belts

Check that the seat belt system such as buckles, retractors and anchors operate properly and smoothly. Make sure the belt webbing is not cut, frayed, worn or damaged.

Accelerator pedal

Check the pedal for smooth operation and uneven pedal effort or catching.

Brake pedal

Check the pedal for smooth operation and that the pedal has the proper clearance. Check the brake booster function.

Brakes

At a safe place, check that the brakes do not pull to one side when applied.

Parking brake

Check that the pedal has the proper travel and that, on a safe incline, your vehicle is held securely with only the parking brake applied.

Automatic transmission “Park” mechanism

Check the lock release button of the selector lever for proper and smooth operation. On a safe incline, check that your vehicle is held securely with the selector lever in “P” position and all brakes released.

OUTSIDE THE VEHICLE

Items listed below should be performed from time to time, unless otherwise specified.

Fluid leaks

Check underneath for leaking fuel, oil, water or other fluid after the vehicle has been parked for a while. If you smell fuel fumes or notice any leak, have the cause found and corrected immediately.

Doors and engine hood

Check that all side doors and back door operate smoothly and all latches lock securely. Make sure the engine hood secondary latch secures the hood from opening when the primary latch is released.

Tire inflation pressure

Check the pressure with a gauge every two weeks, or at least once a month. See page 377 in Section 7–2 for additional information.

Tire surface and wheel nuts

Check the tires carefully for cuts, damage or excessive wear. See page 380 in Section 7–2 for additional information. When checking the tires, make sure no nuts are missing, and check the nuts for looseness. Tighten them if necessary.

Tire rotation

Rotate the tires according to the maintenance schedule. (For scheduled maintenance information, please refer to the “Scheduled Maintenance Guide” or “Owner’s Manual Supplement”.) See page 382 in Section 7–2 for additional information.

Does your vehicle need repairing?

Be on the alert for changes in performance, sounds, and visual tip–offs that indicate service is needed. Some important clues are as follows:

- Engine missing, stumbling, or pinging
- Appreciable loss of power
- Strange engine noises
- A leak under the vehicle (however, water dripping from the air conditioning after use is normal.)
- Change in exhaust sound (This may indicate a dangerous carbon monoxide leak. Drive with the windows open and have the exhaust system checked immediately.)
- Flat–looking tire; excessive tire squeal when cornering; uneven tire wear
- Vehicle pulls to one side when driving straight on a level road
- Strange noises related to suspension movement
- Loss of brake effectiveness; spongy feeling brake pedal; pedal almost touches floor; vehicle pulls to one side when braking
- Engine coolant temperature continually higher than normal

If you notice any of these clues, take your vehicle to your Toyota dealer as soon as possible. It probably needs adjustment or repair.

CAUTION

Do not continue driving with the vehicle unchecked. It could result in serious vehicle damage and possibly personal injury.

Emissions Inspection and Maintenance (I/M) programs

Some states have vehicle emission inspection programs which include OBD (On–Board Diagnostics) checks.

The OBD system monitors the operation of the emission control system. When the OBD system determines that a problem exists somewhere in the emission control system, the malfunction indicator lamp comes on. In this case, your vehicle may not pass the I/M test and need to be repaired. Contact your Toyota dealer to service the vehicle.

Even if the malfunction indicator lamp does not come on, your vehicle may not pass the I/M test as readiness codes have not been set in the OBD system.

Readiness codes are automatically set during ordinary driving. However, when the battery is disconnected or run down, the codes are erased. Also, depending on your driving habits, the codes may not be completely set.

Also, if the malfunction indicator lamp had come on recently due to temporary malfunction such as a loose fuel tank cap, your vehicle may not pass the I/M test.

The malfunction indicator lamp will go off after taking several driving trips, but the error code in the OBD system will not be cleared unless about 40 trips or more are taken.

If your vehicle does not pass the I/M test even the malfunction indicator lamp does not come on, contact your Toyota dealer to prepare the vehicle for re–testing.

SECTION 7–1

DO–IT–YOURSELF MAINTENANCE

Introduction

Engine compartment overview 364
Fuse locations 366
Do–it–yourself service precautions 367
Positioning the jack 368
Parts and tools 369

Engine compartment overview

▶2AZ–FE engine

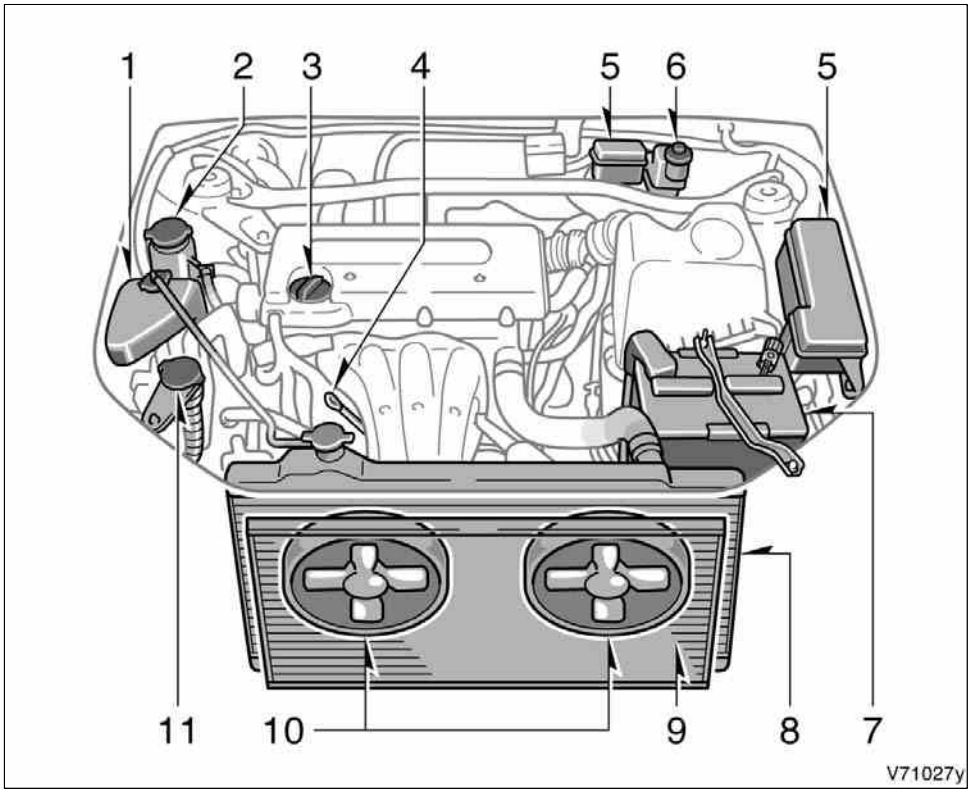

1. Engine coolant reservoir
2. Power steering fluid reservoir
3. Engine oil filler cap
4. Engine oil level dipstick
5. Fuse blocks
6. Brake fluid reservoir
7. Battery
8. Radiator
9. Condenser
10. Electric cooling fans
11. Windshield and rear window washer fluid tank

▶3MZ–FE engine

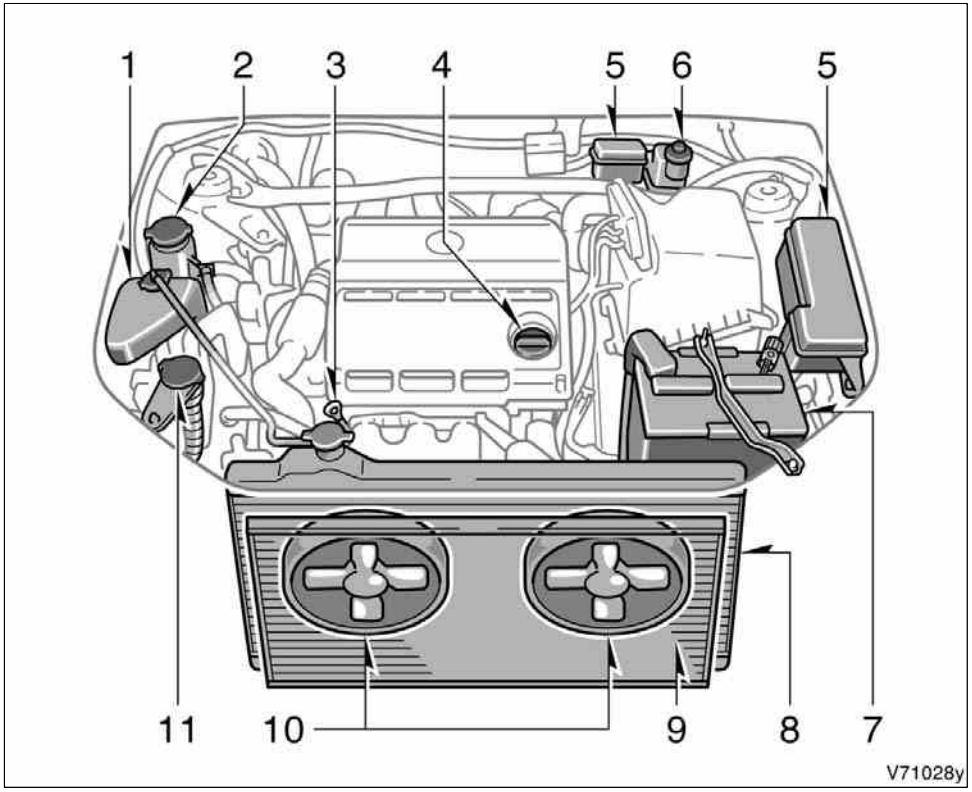

1. Engine coolant reservoir
2. Power steering fluid reservoir
3. Engine oil level dipstick
4. Engine oil filler cap
5. Fuse blocks
6. Brake fluid reservoir
7. Battery
8. Radiator
9. Condenser
10. Electric cooling fans
11. Windshield and rear window washer fluid tank

Fuse locations

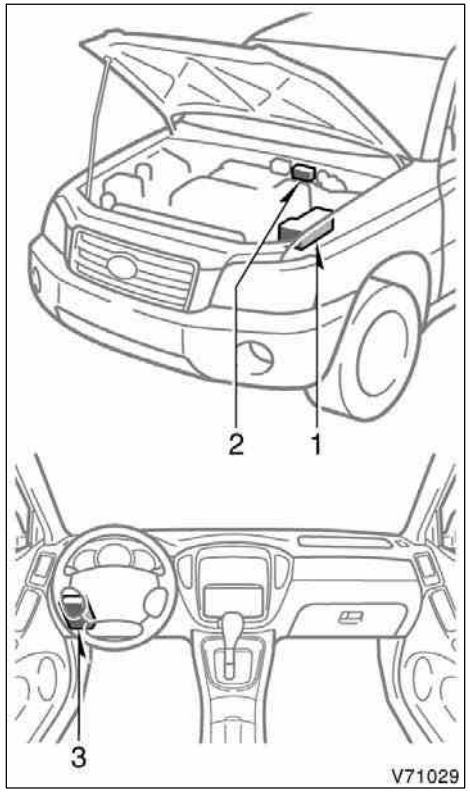

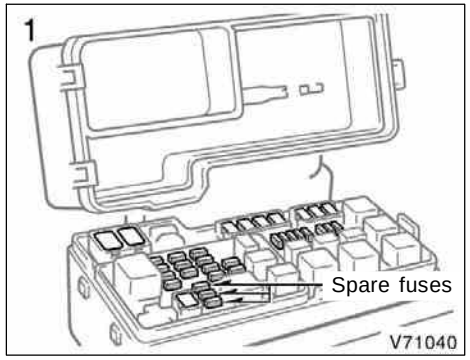

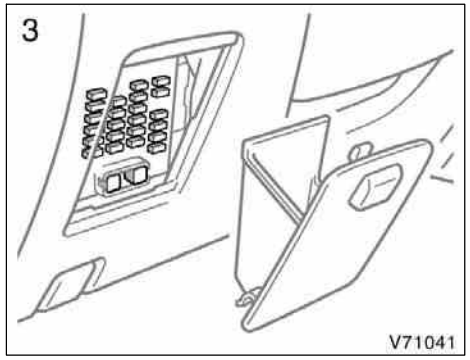

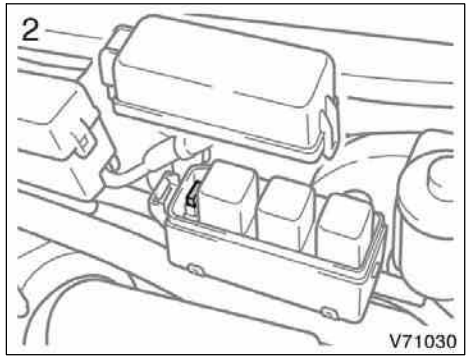

With daytime running light system

Do–it–yourself service precautions

If you perform maintenance by yourself, be sure to follow the correct procedure given in this Section.

You should be aware that improper or incomplete servicing may result in operating problems.

Performing do–it–yourself maintenance during the warranty period may affect your warranty coverage. Read the separate Toyota Warranty statement for details and suggestions.

This Section gives instructions only for those items that are relatively easy for an owner to perform. As explained in Section 6, there are still a number of items that must be done by a qualified technician with special tools.

For information on tools and parts for do–it–yourself maintenance, see “Parts and tools” on page 369 in this Section.

Utmost care should be taken when working on your vehicle to prevent accidental injury. Here are a few precautions that you should be especially careful to observe:

⚠ CAUTION

- **When the engine is running, keep hands, clothing, and tools away from the moving fan and engine drive belts. (Removing rings, watches, and ties is advisable.)**
- **Right after driving, the engine compartment—the engine, radiator, exhaust manifold, power steering fluid reservoir and spark plug boots, etc.—will be hot. So be careful not to touch them. Oil, fluids and spark plugs may also be hot.**
- **If the engine is hot, do not remove the radiator cap or loosen the drain plugs to prevent burning yourself.**
- **Do not leave anything that may burn easily, such as paper or rags, in the engine compartment.**
- **Do not smoke, cause sparks or allow open flames around fuel or the battery. Their fumes are flammable.**
- **Do not get under your vehicle with just the body jack supporting it. Always use automotive jack stands or other solid supports.**
- **Be sure that the ignition is off if you work near the electric cooling fans or radiator grille. With the ignition on, the electric cooling fans will automatically start to run if the engine coolant temperature is high and/or the air conditioning is on.**
- **Use eye protection whenever you work on or under your vehicle where you may be exposed to flying or falling material, fluid spray, etc.**
- **Used engine oil contains potentially harmful contaminants which may cause skin disorders such as inflammation or skin cancer, so care should be taken to avoid prolonged and repeated contact with it. To remove used engine oil from your skin, wash thoroughly with soap and water.**
- **Do not leave used oil within the reach of children.**
- **Dispose of used oil and filter only in a safe and acceptable manner. Do not dispose of used oil and filter in household trash, in sewers or onto the ground. Call your dealer or a service station for information concerning recycling or disposal.**

- **Be extremely cautious when working on the battery. It contains poisonous and corrosive sulfuric acid.**

NOTICE

- ***Remember that battery and ignition cable carry high currents or voltages. Be careful of accidentally causing a short circuit.***
- ***Add only “Toyota Super Long Life Coolant” or similar high quality ethylene glycol based non–silicate, non–amine, non–nitrite, and non–borate coolant with long–life hybrid organic acid technology to fill the radiator. And if you spill some of the coolant, be sure to wash it off with water to prevent it from damaging the parts or paint.***
- ***Do not allow dirt or anything else to fall through the spark plug holes.***
- ***Use only spark plugs of the specified type. Using other types will cause engine damage, loss of performance or radio noise.***
- ***Do not reuse iridium–tipped spark plugs by cleaning or regapping.***
- ***Do not overfill automatic transmission fluid and power steering fluid, or the transmission and power steering could be damaged.***
- ***Do not drive with the air cleaner filter removed, or excessive engine wear could result. Also backfiring could cause a fire in the engine compartment.***
- ***Be careful not to scratch the glass surface with the wiper frame.***
- ***When closing the engine hood, check to see that you have not forgotten any tools, rags, etc.***

Positioning the jack

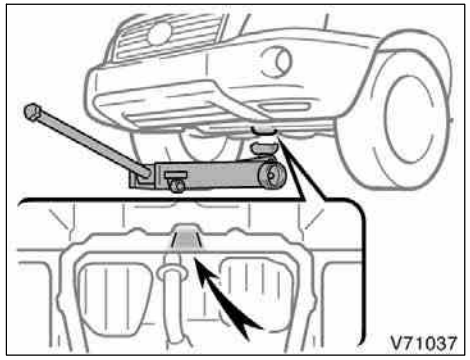

Front

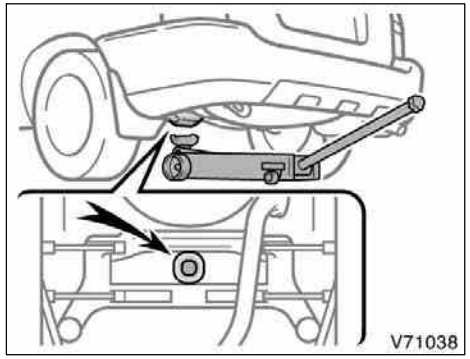

Rear (two–wheel drive models)

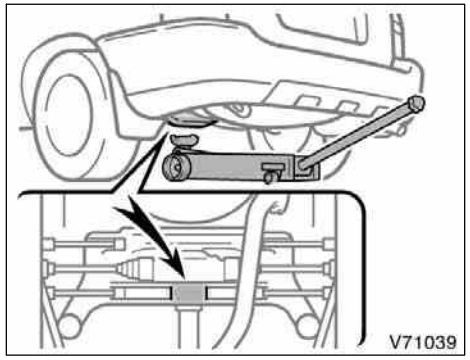

Rear (four–wheel drive models)

When jacking up your vehicle with the jack, position the jack correctly as shown in the illustrations.

CAUTION

When jacking, be sure to observe the following to reduce the possibility of personal injury:

- **Follow jacking instructions.**
- **Do not put any part of your body under the vehicle supported by the jack. Personal injury may occur.**
- **Do not start or run the engine while your vehicle is supported by the jack.**
- **Stop the vehicle on a level firm ground, firmly set the parking brake and put the transmission in “P”. Block the wheels on the opposite side of the jack up point if necessary.**
- **Make sure to set the jack properly in the jack point. Raising the vehicle with jack improperly positioned will damage the vehicle or may allow the vehicle to fall off the jack and cause personal injury.**
- **Never get under the vehicle when the vehicle is supported by the jack alone; use vehicle support stands.**
- **Do not raise the vehicle with someone in the vehicle.**
- **When raising the vehicle, do not place any objects on top of or underneath the jack.**

NOTICE

Make sure to place the jack correctly, or your vehicle may be damaged.

Parts and tools

Here is a list of parts and tools you will need to perform do–it–yourself maintenance. Remember all Toyota parts are designed in metric sizes, so your tools must be metric.

CHECKING THE ENGINE OIL LEVEL

Parts (if level is low):

- “Toyota Genuine Motor Oil” or equivalent

  See page 372 in Section 7–2 for details about engine oil selection.

Tools:

- Rag or paper towel
- Funnel (only for adding oil)

CHECKING THE ENGINE COOLANT LEVEL

Parts (if level is low):

- “Toyota Super Long Life Coolant” or similar high quality ethylene glycol based non–silicate, non–amine, non–nitrite, and non–borate coolant with long–life hybrid organic acid technology.

  “Toyota Super Long Life Coolant” is pre–mixed with 50% coolant and 50% deionized water.

Tools:

- Funnel (only for adding coolant)

CHECKING BRAKE FLUID

Parts (if level is low):

- SAE J1703 or FMVSS No.116 DOT 3 brake fluid

Tools:

- Rag or paper towel
- Funnel (only for adding fluid)

CHECKING POWER STEERING FLUID

Parts (if level is low):

- Automatic transmission fluid DEXRON®II or III

Tools:

- Rag or paper towel
- Funnel (only for adding fluid)

CHECKING BATTERY CONDITION

Tools:

- Warm water
- Baking soda
- Grease
- Conventional wrench (for terminal clamp bolts)

CHECKING AND REPLACING FUSES

Parts (if replacement is necessary):

- Fuse with same amperage rating as original

ADDING WASHER FLUID

Parts:

- Water
- Washer fluid containing antifreeze (for winter use)

Tools:

- Funnel

REPLACING LIGHT BULBS

Parts:

- Bulb with same number and wattage rating as original (See charts in “Replacing light bulbs” on page 392 in Section 7–3.)

Tools:

- Screwdriver

SECTION 7–2

DO–IT–YOURSELF MAINTENANCE

Engine and Chassis

Checking the engine oil level 372
Checking the engine coolant level 375
Checking the radiator and condenser 376
Checking brake fluid 376
Checking power steering fluid 377
Checking tire inflation pressure 377
Checking and replacing tires 380
Rotating tires 382
Installing snow tires and chains 382
Replacing wheels 384
Aluminum wheel precautions 385

Checking the engine oil level

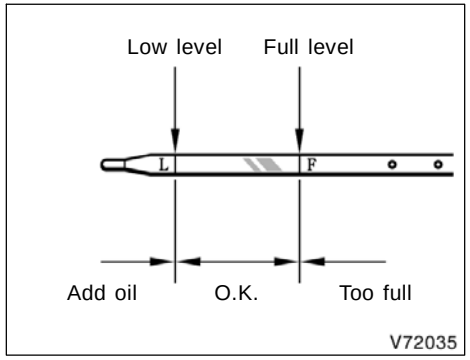

2AZ–FE engine

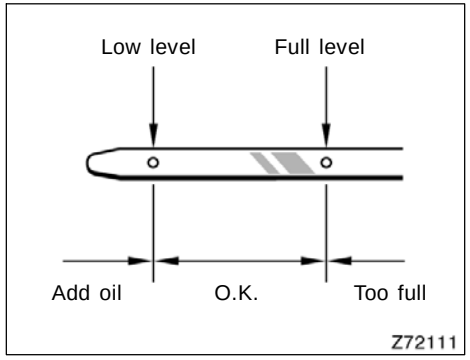

3MZ–FE engine

With the engine at operating temperature and turned off, check the oil level on the dipstick.

1. To get a true reading, the vehicle should be on a level ground. After turning off the engine, wait a few minutes for the oil to drain back into the bottom of the engine.
2. Pull the dipstick out, hold a rag under the end and wipe it clean.
3. Reinsert the dipstick—push it in as far as it will go, or the reading will not be correct.
4. Pull the dipstick out and look at the oil level while holding a rag under the end.

⚠ CAUTION

Be careful not to touch the hot exhaust manifold.

NOTICE

- ***Be careful not to drop the engine oil on the vehicle components.***
- ***To avoid drops of the engine oil falling when you pull out the engine oil dipstick, make sure to hold a rag under the dipstick.***

If the oil level is below or only slightly above the low level, add engine oil of the same type as already in the engine.

Remove the oil filler cap and add engine oil in small quantities at a time, checking the dipstick. We recommend that you use a funnel when adding oil.

The approximate quantity of oil needed to fill between the low level and the full level on the dipstick is indicated below for reference.

When the level reaches within the correct range, install the filler cap hand–tight.

Oil quantity, L (qt., Imp. qt.):

2AZ–FE engine	1.0 (1.1, 0.9)
3MZ–FE engine	1.5 (1.6, 1.3)

NOTICE

- ***Be careful not to spill the engine oil on the vehicle components.***
- ***Avoid overfilling, or the engine could be damaged.***
- ***Check the oil level on the dipstick once again after adding the oil.***

ENGINE OIL SELECTION

“Toyota Genuine Motor Oil” is filled in your Toyota vehicle. Use Toyota approved “Toyota Genuine Motor Oil” or equivalent to satisfy the following grade and viscosity.

Oil grade:
API grade SL “Energy–Conserving” or ILSAC multigrade engine oil

Recommended viscosity:
SAE 5W–30

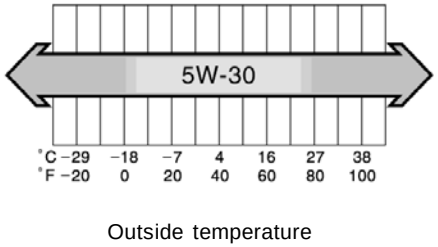

SAE 5W–30 is the best choice for good fuel economy and good starting in cold weather.

If SAE 5W–30 is not available, SAE 10W–30 may be used. However, it should be replaced with SAE 5W–30 at the next oil change.

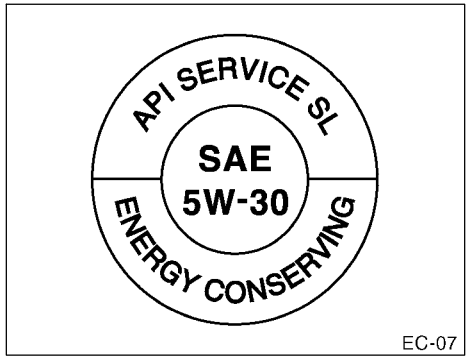

API service symbol

ILSAC certification mark

Oil identification marks

Either or both API registered marks are added to some oil containers to help you select the oil you should use.

The API Service Symbol is located anywhere on the outside of the container.

The top portion of the label shows the oil quality by API (American Petroleum Institute) designations such as SL. The center portion of the label shows the SAE viscosity grade such as SAE 5W–30. “Energy–Conserving” shown in the lower portion, indicates that the oil has fuel–saving capabilities.

The ILSAC (International Lubricant Standardization and Approval Committee) Certification Mark is displayed on the front of the container.

To ensure excellent lubrication performance for your engine, “Toyota Genuine Motor Oil” is available, which has been specifically tested and approved for all Toyota engines.

Please contact your Toyota dealer for further details about “Toyota Genuine Motor Oil”.

Checking the engine coolant level

Look at the see–through coolant reservoir when the engine is cold. The coolant level is satisfactory if it is between the “F” and “L” lines on the reservoir. If the level is low, add the coolant. (For the coolant type, see “Coolant type selection” described below.)

The coolant level in the reservoir will vary with engine temperature. However, if the level is on or below the “L” line, add coolant. Bring the level up to the “F” line.

If the coolant level drops within a short time after replenishing, there may be a leak in the system. Visually check the radiator, hoses, radiator cap and drain cock and water pump.

If you can find no leak, have your Toyota dealer test the cap pressure and check for leaks in the cooling system.

⚠ CAUTION

To prevent burning yourself, do not remove the radiator cap when the engine is hot.

Coolant type selection

Use of improper coolants may damage your engine cooling system.

Only use “Toyota Super Long Life Coolant” or similar high quality ethylene glycol based non–silicate, non–amine, non–nitrite, and non–borate coolant with long–life hybrid organic acid technology. (Coolant with long–life hybrid organic acid technology consists of the combination of low phosphates and organic acids.)

“Toyota Super Long Life Coolant” is pre–mixed with 50% coolant and 50% deionized water. This coolant provides protection down to about –35°C (–31°F).

NOTICE

Do not use plain water alone.

Toyota recommends “Toyota Super Long Life Coolant” which has been tested to ensure that it will not cause corrosion nor result in malfunction of your engine coolant system with proper usage. “Toyota Super Long Life Coolant” is formulated with long–life hybrid organic acid technology and has been specifically designed to avoid engine cooling system malfunction on Toyota vehicles.

Please contact your Toyota dealer for further details.

Checking the radiator and condenser

If either of the above parts are extremely dirty or you are not sure of their condition, take your vehicle to a Toyota dealer.

⚠ CAUTION

To prevent burning yourself, be careful not to touch the radiator or condenser when the engine is hot.

NOTICE

To prevent damage to the radiator and condenser, do not perform the work by yourself.

Checking brake fluid

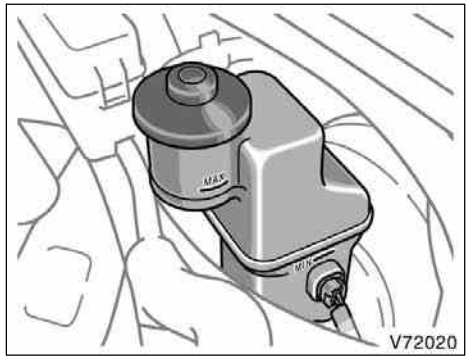

To check the fluid level, simply look at the see–through reservoir. The level should be between the “MAX” and “MIN” lines on the reservoir.

It is normal for the brake fluid level to go down slightly as the brake pads wear. So be sure to keep the reservoir filled.

If the reservoir needs frequent refilling, it may indicate a serious mechanical problem.

If the level is low, add SAE J1703 or FMVSS No.116 DOT 3 brake fluid to the brake reservoir.

Remove and replace the reservoir cap by hand. Fill the brake fluid to the dotted line. This brings the fluid to the correct level when you put the cap back on.

Use only newly opened brake fluid. Once opened, brake fluid absorbs moisture from the air, and excess moisture can cause a dangerous loss of braking.

⚠ CAUTION

Take care when filling the reservoir because brake fluid can harm your eyes and damage painted surfaces. If fluid gets in your eyes, flush your eyes with clean water immediately. If you still feel uncomfortable with your eyes, go to the doctor.

NOTICE

If you spill some of the fluid, be sure to wash it off with water to prevent it from damaging the parts or paint.

Checking power steering fluid

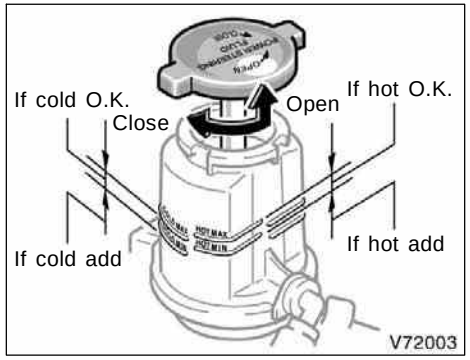

Check the fluid level through the reservoir. If necessary, add automatic transmission fluid DEXRON®II or III.

If the vehicle has been driven around 80 km/h (50 mph) for 20 minutes (a little more in frigid temperatures), the fluid is hot (80°C or 175°F). You may also check the level when the fluid is cold (about room temperature, 10°C—30°C or 50°F—85°F) if the engine has not been run for about five hours.

Clean all dirt from outside of the reservoir tank and look at the fluid level. If the fluid is cold, the level should be in the “COLD” range. Similarly, if it is hot, the fluid level should be in the “HOT” range. If the level is at the low side of either range, add automatic transmission fluid DEXRON®II or III to bring the level within the range.

To remove the reservoir cap, turn it counterclockwise and lift up. To reinstall it, turn it clockwise. After replacing the reservoir cap, visually check the steering box case, vane pump and hose connections for leaks or damage.

⚠ CAUTION

The reservoir tank may be hot so be careful not to burn yourself.

NOTICE

Avoid overfilling, or the power steering could be damaged.

Checking tire inflation pressure

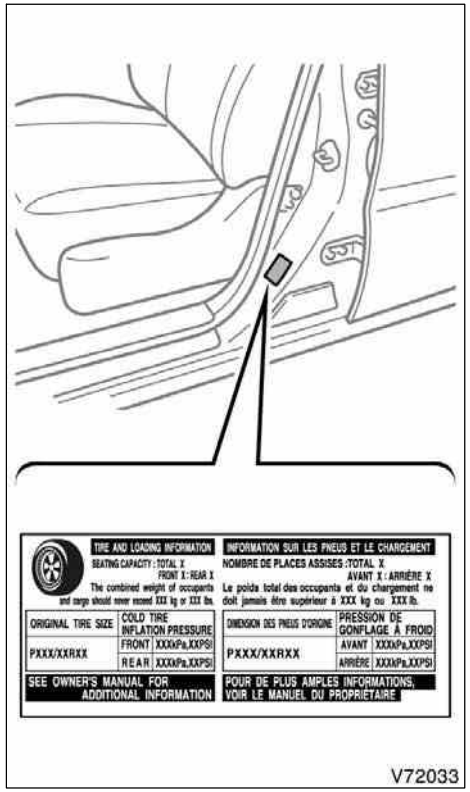

Keep your tire inflation pressures at the proper level.

The recommended cold tire inflation pressures, tire sizes and the combined weight of occupants and cargo (vehicle capacity weight) are described on page 398 and 402. They are also on the tire and loading information label.

You should check the tire inflation pressure every two weeks, or at least once a month. And do not forget the spare!

The following instructions for checking tire inflation pressure should be observed:

- **The pressure should be checked only when the tires are cold.** If your vehicle has been parked for at least 3 hours and has not been driven for more than 1.5 km or 1 mile since, you will get an accurate cold tire inflation pressure reading.
- **Always use a tire pressure gauge.** The appearance of a tire can be misleading. Besides, tire inflation pressures that are even just a few pounds off can degrade ride and handling.
- **Do not bleed or reduce tire inflation pressure after driving.** It is normal for the tire inflation pressure to be higher after driving.
- **Never exceed the vehicle capacity weight.** The passenger and luggage weight should be located so that the vehicle is balanced.

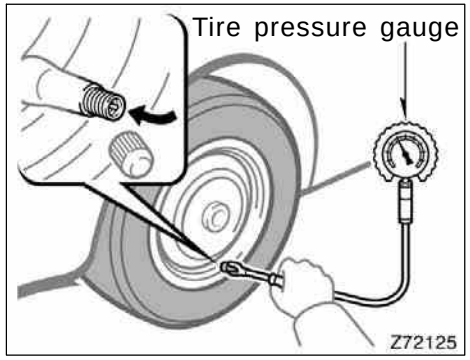

INSPECTION AND ADJUSTMENT PROCEDURE

1. Remove the tire valve cap.
2. Press the tip of the tire pressure gauge to the tire valve.
3. Read the pressure using a graduation of the gauge.
4. In case that the tire inflation pressure is not within the prescribed range, insert the compressed air from the valve. In case of applying too much air, press the center of the valve and release the air to adjust.

5. After completing the tire inflation pressure measurement and adjustment, apply soap water to the valve and check the leakage.
6. Install the tire valve cap.

If the gauge and the air pump are not available, have your vehicle checked by your Toyota dealer.

⚠ CAUTION

Be sure to reinstall the tire valve caps. Without the valve caps, dirt or moisture could get into the valve core and cause air leakage. If the caps have been lost, have new ones put on as soon as possible.

Incorrect tire inflation pressure may waste fuel, reduce the comfort of driving, reduce tire life and make your vehicle less safe to drive.

If a tire frequently needs refilling, have it checked by your Toyota dealer.

⚠ CAUTION

Keep your tires properly inflated. Otherwise, the following conditions may occur and cause an accident resulting in death or serious injuries.

Low tire pressure (underinflation)—

- **Excessive wear**
- **Uneven wear**
- **Poor handling**
- **Possibility of blowouts from overheated tire.**
- **Poor sealing of the tire bead**
- **Wheel deformation and/or tire separation**
- **A greater possibility of tire damage from road hazards**

High tire pressure (overinflation)—

- **Poor handling**
- **Excessive wear**
- **Uneven wear**
- **A greater possibility of tire damage from road hazards**

Checking and replacing tires

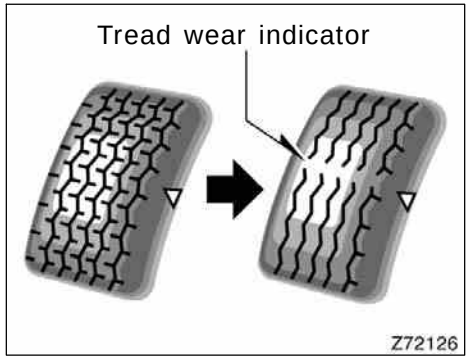

CHECKING YOUR TIRES

Check the tires tread for the tread wear indicators. If the indicators show, replace the tires. The location of the tread wear indicators is shown by the “TWI” or “∆” marks, etc., molded on the sidewall of each tire.

The tires on your Toyota have built–in tread wear indicators to help you know when the tires need replacement. When the tread depth wears to 1.6 mm (0.06 in.) or less, the indicators will appear. If you can see the indicators in two or more adjacent grooves, the tire should be replaced. The lower the tread, the higher the risk of skidding.

The effectiveness of snow tires is lost if the tread wears down below 4 mm (0.16 in.).

If you have tire damage such as cuts, splits, cracks deep enough to expose the fabric, or bulges indicating internal damage, the tire should be replaced.

If a tire often goes flat or cannot be properly repaired due to the size or location of a cut or other damage, it should be replaced. If you are not sure, consult with your Toyota dealer.

If an air loss occurs while driving, do not continue driving with a deflated tire. Driving even a short distance can damage a tire beyond repair.

Any tires which are over 6 years old must be checked by a qualified technician even if damage is not obvious.

Tires deteriorate with age even if they have never or seldom been used.

This applies also to the spare tire and tires stored for future use.

REPLACING YOUR TIRES

When replacing a tire, use a tire of the same size and construction, and the same or greater maximum load as the originally installed tires. Also, on four–wheel drive models, all the tires must be the same brand and have the same tread patterns.

Using any other size or type of tire may seriously affect handling, ride, speedometer/odometer calibration, ground clearance, and clearance between the body and tires or snow chains.

Check that the maximum load of the replaced tire is greater than 1/2 of the Gross Axle Weight Ratings (GAWR) of either the front axle or the rear axle, whichever greater. As for the maximum load of the tire, see the load limit at maximum cold tire inflation pressure mentioned on the sidewall of the tire, and as for the Gross Axle Weight Ratings (GAWR), see the Certification Label.

For details about the side wall of the tire and the Certification Label, see pages 293 and 296.

⚠ CAUTION

Observe the following instructions. Otherwise, an accident may occur resulting in death or serious injuries.

- **Do not mix radial, bias belted, or bias–ply tires on your vehicle, as this may cause dangerous handling characteristics resulting in loss of control.**
- **Do not use tires other than the manufacturer’s recommended size, as this may cause dangerous handling characteristics resulting in loss of control.**
- **Four–wheel drive models: Do not use tires of different brands, sizes, construction or tread patterns, as this may cause dangerous handling characteristics resulting in loss of control.**

Toyota recommends all four tires, or at least both of the front or rear tires be replaced at a time as a set.

See “If you have a flat tire” on page 329 in Section 4 for tire change procedure.

When a tire is replaced, the wheel should always be balanced.

An unbalanced wheel may affect vehicle handling and tire life. Wheels can get out of balance with regular use and should therefore be balanced occasionally.

When replacing a tubeless tire, the air valve should also be replaced with a new one.

Rotating tires

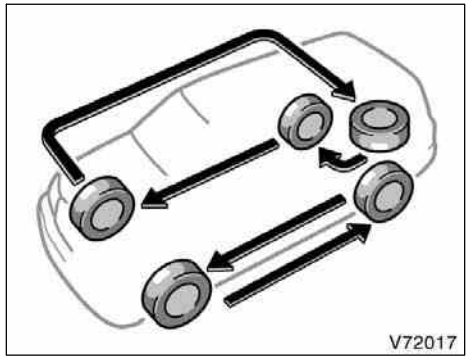

To equalize tire wear and help extend tire life, Toyota recommends that you rotate your tires according to the maintenance schedule. (For scheduled maintenance information, please refer to the “Scheduled Maintenance Guide” or “Owner’s Manual Supplement”.) However, the most appropriate timing for tire rotation may vary according to your driving habits and road surface conditions.

See “If you have a flat tire” on page 329 in Section 4 for tire change procedure.

When rotating tires, check for uneven wear and damage. Abnormal wear is usually caused by incorrect tire pressure, improper wheel alignment, out–of–balance wheels, or severe braking.

Initial adjustment of the tire pressure warning system is necessary after you have rotated your tires. See “Tire pressure warning system” on page 155 in Section 1–7.

Installing snow tires and chains

WHEN TO USE SNOW TIRES OR CHAINS

Snow tires or chains are recommended when driving on snow or ice.

On wet or dry roads, conventional tires provide better traction than snow tires.

SNOW TIRE SELECTION

If you need snow tires, select tires of the same size, construction and load capacity as the originally installed tires. Also, on four–wheel drive models, all the tires must be the same brand and have the same tread patterns.

Do not use tires other than those mentioned above. Do not install studded tires without first checking local regulations for possible restrictions.

⚠ CAUTION

Observe the following instructions. Otherwise, an accident may occur resulting in death or serious injuries.

- **Do not use snow tires other than the manufacturer’s recommended size, as this may cause dangerous handling characteristics resulting in loss of control.**

- **Four–wheel drive models:**
  Do not use snow tires of different brands, sizes, construction or tread patterns, as this may cause dangerous handling characteristics resulting in loss of control.

SNOW TIRE INSTALLATION

Snow tires should be installed on all wheels.

Installing snow tires on the front wheels only can lead to an excessive difference in road grip capability between the front and rear tires, which could cause loss of vehicle control.

When storing removed tires, you should store them in a cool dry place.

Mark the direction of rotation and be sure to install them in the same direction when replacing.

⚠ CAUTION

- **Do not drive with the snow tires incorrectly inflated.**
- **Never drive over 120 km/h (75 mph) with any type of snow tires.**

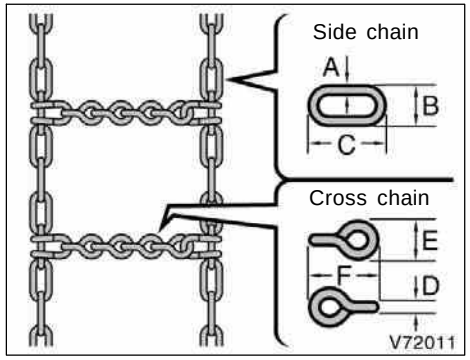

TIRE CHAIN SELECTION

Use the tire chains of correct size.

Use the following type chains.

		mm (in.)
A	Diameter of side chain	3 (0.12)
B	Width of side chain	10 (0.39)
C	Length of side chain	30 (1.18)
D	Diameter of cross chain	4 (0.16)
E	Width of cross chain	14 (0.55)
F	Length of cross chain	25 (0.98)

Regulations regarding the use of tire chains vary according to location or type of road, so always check them before installing chains.

NOTICE

If the wrong combination of tire and chain is used, the chains could damage the vehicle body.

CHAIN INSTALLATION

Install the chains on the front tires as tightly as possible. Do not use tire chains on the rear tires. Retighten chains after driving 0.5—1.0 km (1/4—1/2 mile).

When installing chains on your tires, carefully follow the instructions of the chain manufacturer.

If wheel covers are used, they will be scratched by the chain band, so remove the covers before putting on the chains.

CAUTION

- **Do not exceed 50 km/h (30 mph) or the chain manufacturer’s recommended speed limit, whichever is lower.**
- **Drive carefully avoiding bumps, holes, and sharp turns, which may cause the vehicle to bounce.**
- **Avoid sharp turns or locked–wheel braking, as use of chains may adversely affect vehicle handling.**
- **When driving with chains installed, be sure to drive carefully. Slow down before entering curves to avoid losing control of the vehicle. Otherwise an accident may occur.**

Replacing wheels

WHEN TO REPLACE YOUR WHEELS

If you have wheel damage such as bending, cracks or heavy corrosion, the wheel should be replaced.

If you fail to replace a damaged wheel, the tire may slip off the wheel or cause loss of handling control.

WHEEL SELECTION

When replacing wheels, care should be taken to ensure that the wheels are replaced by ones with the same load capacity, diameter, rim width, and offset.

Correct replacement wheels are available at your Toyota dealer.

A wheel of a different size or type may adversely affect handling, wheel and bearing life, brake cooling, speedometer/odometer calibration, stopping ability, headlight aim, bumper height, vehicle ground clearance, and tire or snow chain clearance to the body and chassis.

Replacement with used wheels is not recommended as they may have been subjected to rough treatment or high mileage and could fail without warning. Also, bent wheels which have been straightened may have structural damage and therefore should not be used. Never use an inner tube in a leaking wheel which is designed for a tubeless tire.

CAUTION

Observe the following instructions. Otherwise, an accident may occur resulting in death or serious injuries.

- **Do not use wheels other than the manufacturer’s recommended size, as this may cause dangerous handling characteristics resulting in loss of control.**
- **Four–wheel drive models:**
  Do not use wheels of different brands, sizes and types, as this may cause dangerous handling characteristics resulting in loss of control.

Aluminum wheel precautions

- When installing aluminum wheels, check that the wheel nuts are tight after driving your vehicle the first 1600 km (1000 miles).
- If you have rotated, repaired, or changed your tires, check that the wheel nuts are still tight after driving 1600 km (1000 miles).
- When using tire chains, be careful not to damage the aluminum wheels.
- Use only the Toyota wheel nuts and wrench designed for your aluminum wheels.
- When balancing your wheels, use only Toyota balance weights or equivalent and a plastic or rubber hammer.
- As with any wheel, periodically check your aluminum wheels for damage. If damaged, replace immediately.

SECTION 7–3

DO–IT–YOURSELF MAINTENANCE

Electrical components

Checking battery condition 388
Battery recharging precautions 389
Checking and replacing fuses 390
Adding washer fluid 391
Replacing light bulbs 392

Checking battery condition——Precautions

⚠ CAUTION

BATTERY PRECAUTIONS

The battery produces flammable and explosive hydrogen gas.

- **Do not cause a spark from the battery with tools.**
- **Do not smoke or light a match near the battery.**

The electrolyte contains poisonous and corrosive sulfuric acid.

- **Avoid contact with eyes, skin or clothes.**
- **Never ingest electrolyte.**
- **Wear protective safety glasses when working near the battery.**
- **Keep children away from the battery.**

EMERGENCY MEASURES

- **If electrolyte gets in your eyes, flush your eyes with clean water immediately and get immediate medical attention. If possible, continue to apply water with a sponge or cloth while en route to the medical office.**
- **If electrolyte gets on your skin, thoroughly wash the contact area. If you feel pain or burning, get medical attention immediately.**
- **If electrolyte gets on your clothes, there is a possibility of its soaking through to your skin, so immediately take off the exposed clothing and follow the procedure above, if necessary.**
- **If you accidentally swallow electrolyte, drink a large quantity of water or milk. Follow with milk of magnesia, beaten raw egg or vegetable oil. Then go immediately for emergency help.**

—Checking battery exterior

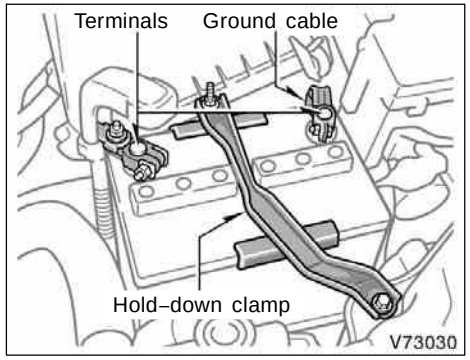

Check the battery for corroded or loose terminal connections, cracks, or loose hold–down clamp.

a. If the battery is corroded, wash it off with a solution of warm water and baking soda. Coat the outside of the terminals with grease to prevent further corrosion.

b. If the terminal connections are loose, tighten their clamp nuts—but do not overtighten.

c. Tighten the hold–down clamp only enough to keep the battery firmly in place. Overtightening may damage the battery case.

NOTICE

- ***Be sure the engine and all accessories are off before performing maintenance.***
- ***When checking the battery, remove the ground cable from the negative terminal (“–” mark) first and reinstall it last.***
- ***Be careful not to cause a short circuit with tools.***
- ***Take care no solution gets into the battery when washing it.***

—Checking battery condition

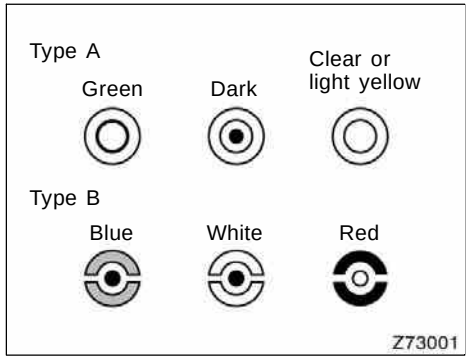

CHECKING BY INDICATOR

Check the battery condition by the indicator color.

Indicator color		Condition
Type A	Type B	
Green	Blue	Good
Dark	White	Charging necessary. Have battery checked by your Toyota dealer.
Clear or light yellow	Red	Have battery checked by your Toyota dealer.

Battery recharging precautions

During recharging, the battery is producing hydrogen gas.

Therefore, before recharging:

1. If recharging with the battery installed on the vehicle, be sure to disconnect the ground cable.
2. Be sure the power switch on the recharger is off when connecting the charger cables to the battery and when disconnecting them.

⚠ CAUTION

- **Always charge the battery in an unconfined area. Do not charge the battery in a garage or closed room where there is not sufficient ventilation.**
- **Only do a slow charge (5 A or less). Charging at a quicker rate is dangerous. The battery may explode, causing personal injuries.**

NOTICE

Never recharge the battery while the engine is running. Also, be sure all accessories are turned off.

Checking and replacing fuses

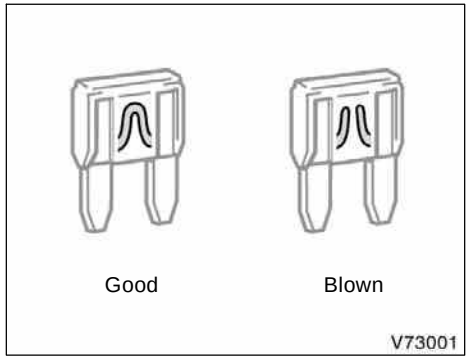

Type A

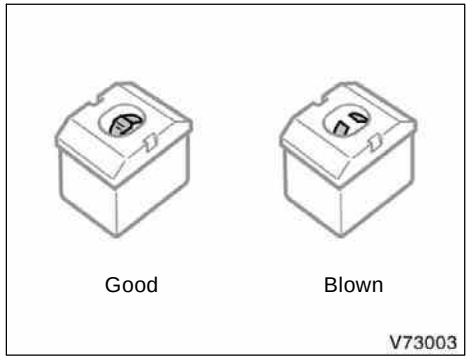

Type C

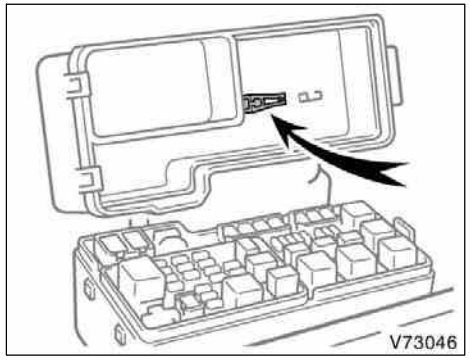

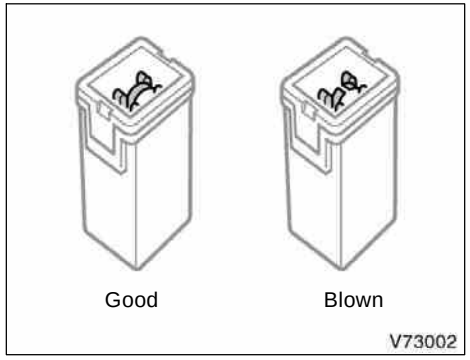

Type B

If the headlights or other electrical components do not work, check the fuses. If any of the fuses are blown, they must be replaced.

See “Fuse locations” on page 366 in Section 7–1 for locations of the fuses.

Turn the ignition switch and inoperative component off. Pull a suspected fuse straight out and check it.

Determine which fuse may be causing the problem. The lid of the fuse box shows the name of the circuit for each fuse. See page 402 in Section 8 of this manual for the functions controlled by each circuit.

Type A fuses can be pulled out by using the pull–out tool. The location of the pull–out tool is shown in the illustration.

If you are not sure whether the fuse has blown, try replacing the suspected fuse with one that you know is good.

If the fuse has blown, push a new fuse into the clip.

Only install a fuse with the amperage rating designated on the fuse box lid.

If you do not have a spare fuse, in an emergency you can pull out the “FR DEF” or “CIG” fuse, which may be dispensable for normal driving, and use it if its amperage rating is the same.

If you cannot use one of the same amperage, use one that is lower, but as close as possible to the rating. If the amperage is lower than that specified, the fuse might blow out again but this does not indicate anything wrong. Be sure to get the correct fuse as soon as possible and return the substitute to its original clip.

It is a good idea to purchase a set of spare fuses and keep them in your vehicle for emergencies.

If the new fuse immediately blows out, there is a problem with the electrical system. Have your Toyota dealer correct it as soon as possible.

CAUTION

Never use a fuse with a higher amperage rating, or any other object, in place of a fuse. This may cause extensive damage and possibly a fire.

Adding washer fluid

If any washer does not work or low windshield washer fluid level warning light comes on, the washer tank may be empty. Add washer fluid.

You may use plain water as washer fluid. However, in cold areas where temperatures range below freezing point, use washer fluid containing antifreeze. This product is available at your Toyota dealer and most auto parts stores. Follow the manufacturer’s directions for how much to mix with water.

NOTICE

Do not use engine antifreeze or any other substitute because it may damage your vehicle’s paint.

Replacing light bulbs—

The following illustrations show how to gain access to the bulbs. When replacing a bulb, make sure the ignition switch and light switch are off. Use bulbs with the wattage ratings given in the table.

CAUTION

- **To prevent burning yourself, do not replace the light bulbs while they are hot.**
- **Halogen bulbs have pressurized gas inside and require special handling. They can burst or shatter if scratched or dropped. Hold a bulb only by its plastic or metal case. Do not touch the glass part of a bulb with bare hands.**

NOTICE

Only use a bulb of the listed type.

The inside of the lens of exterior lights such as headlights may temporarily fog up when the lens becomes wet in the rain or in a car wash. This is not a problem because the fogging is caused by the temperature difference between the outside and inside of the lens, just like the windshield fogged up in the rain. However, if there is a large drop of water on the inside of the lens, or if there is water pooled inside the light, contact your Toyota dealer.

Light bulbs	Bulb No.	W	Type
Headlights (low)	9006	51	A
Headlights (high)	9005	60	B
Front fog lights	9006	51	A
Front turn signals/ parking and front side marker lights	—	21/5	C
Rear side marker lights	168	5	E
Rear turn signal lights	—	21	D
Stop/tail lights	7443	21/5	E
Back–up lights	7440	21	E
High mounted stop light	921	16	E
License plate lights	—	5	E
Interior lights	—	8	F
Personal lights	—	5	E
Vanity lights	—	2	F
Door courtesy lights	—	5	E
Glove box light	#74	1.2	E

A: HB4 halogen bulbs
B: HB3 halogen bulbs
C: Single end bulbs
D: Wedge base bulbs (amber)
E: Wedge base bulbs (clear)
F: Double end bulbs

—Headlights

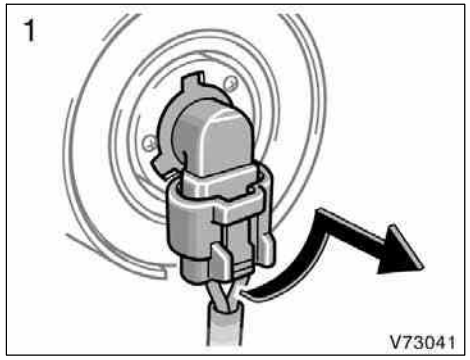

1. Open the hood. Turn the bulb base counterclockwise to the front of the vehicle as shown.

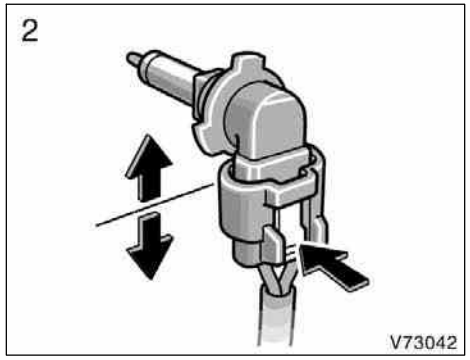

2. Pull the bulb out of the bulb base and install a new bulb.

If the connector is tight, wiggle it.

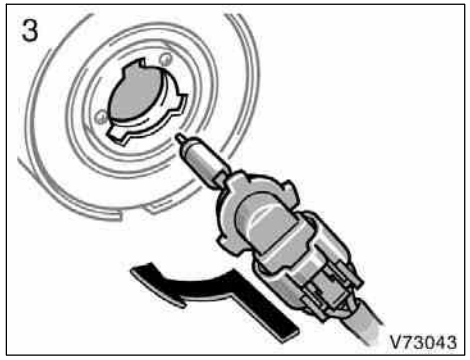

3. Insert the bulb base into the mounting hole by turning it clockwise.

Aiming is not necessary after replacing the bulb. When aiming adjustment is necessary, contact your Toyota dealer.

—Front fog, front turn signal/ parking and front side marker, and rear side marker lights

If any of the following lights burns out, contact your Toyota dealer.

- **Front fog lights**
- **Front turn signals/parking and front side marker lights**
- **Rear side marker lights**

NOTICE
Do not try to replace any of the light bulbs mentioned above by yourself. You may damage the vehicle.

—Rear turn signal, stop/tail and back–up lights

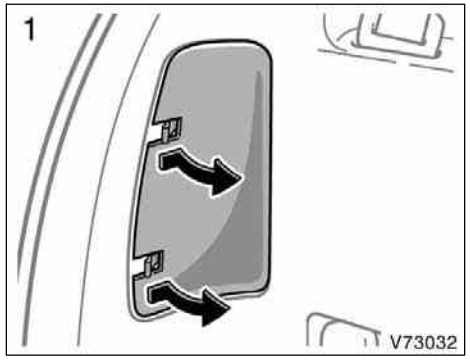

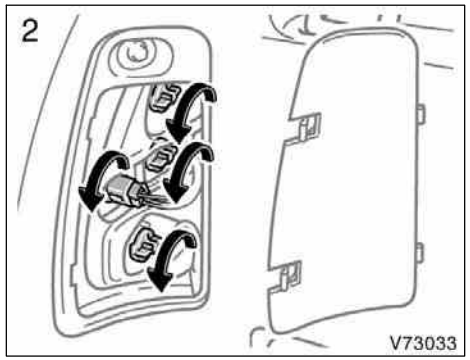

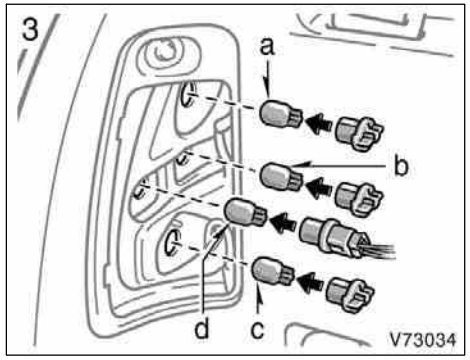

a: Stop/tail light
b: Rear turn signal light
c: Stop/tail light
d: Back–up light

—High mounted stoplight

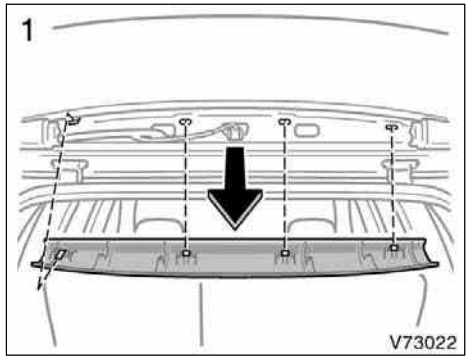

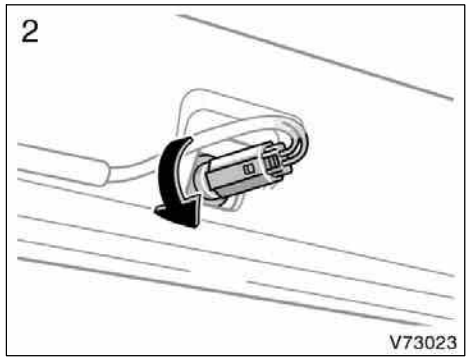

—License plate light

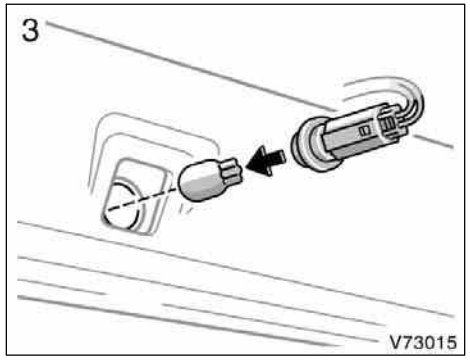

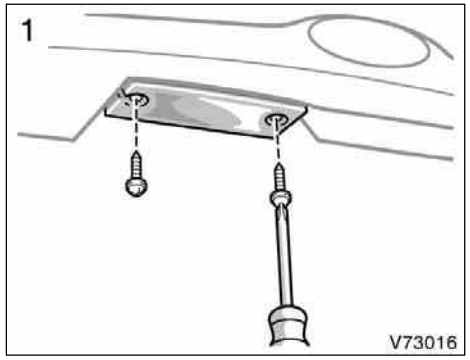

Use a Phillips–head screwdriver.

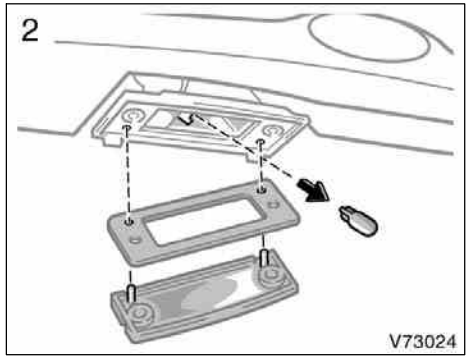

SECTION 8

SPECIFICATIONS

Specifications

Dimensions and weights 398
Engine 398
Fuel 399
Service specifications 399
Tires 402
Fuses 402

Dimensions and weights

		Two–wheel drive models	Four–wheel drive models
Overall length	mm (in.)	4690 (184.6)	4690 (184.6)
Overall width	mm (in.)	1825 (71.9)	1825 (71.9)
Overall height*1	mm (in.)	1680 (66.1)*2 1735 (68.3)*3	1690 (66.5)*2 1745 (68.7)*3
Wheelbase	mm (in.)	2715 (106.9)	2715 (106.9)
Front tread	mm (in.)	1580 (62.2)	1575 (62.0)
Rear tread	mm (in.)	1565 (61.6)	1555 (61.2)
Vehicle capacity weight (occupants + luggage)	kg (lb.)	390 (860)*4 526 (1159)*5	390 (860)*4 526 (1159)*5
Towing capacity (trailer weight + cargo weight)	kg (lb.)	1360 (3000)*6 1585 (3500)*7	1360 (3000)*6 1585 (3500)*7

*1: Unladen vehicle
*2: Without roof rails
*3: With roof rails
*4: Without third seat
*5: With third seat
*6: 2AZ–FE engine
*7: 3MZ–FE engine

Engine

Model:
2AZ–FE and 3MZ–FE

Type:
2AZ–FE engine
4 cylinder in line, 4 cycle, gasoline

3MZ–FE engine
6 cylinder V type 4 cycle, gasoline

Bore and stroke, mm (in.):
2AZ–FE engine
88.5 × 96.0 (3.48 × 3.78)

3MZ–FE engine
92.0 × 83.0 (3.62 × 3.27)

Displacement, cm^3 (cu. in.):
2AZ–FE engine
2362 (144.1)

3MZ–FE engine
3311 (202.1)

Fuel

Fuel type:
2AZ–FE engine
Unleaded gasoline, Octane Rating 87 (Research Octane Number 91) or higher

3MZ–FE engine
Unleaded gasoline, Octane Rating 87 (Research Octane Number 91) or higher. For improved vehicle performance, the use of premium unleaded gasoline with an Octane Rating of 91 (Research Octane Number 96) or higher is recommended.

Fuel tank capacity, L (gal., Imp. gal.):
72.5 (19.1, 16.0)

Service specifications

ENGINE

Valve clearance (engine cold), mm (in.):

2AZ–FE engine		
Intake	0.19—0.29	(0.007—0.011)
Exhaust	0.30—0.40	(0.012—0.016)
3MZ–FE engine		
Intake	0.15—0.25	(0.006—0.010)
Exhaust	0.25—0.35	(0.010—0.014)

Spark plug type:

DENSO	SK20R11
NGK	IFR6A11

Spark plug gap, mm(in.):
1.1 (0.043)

Drive belt tension measured with Borroughs drive belt tension gauge No.BT–33–73F (used belt), lbf:

2AZ–FE engine
Automatic adjustment

3MZ–FE engine
125 ± 10

ENGINE LUBRICATION

Oil capacity (drain and refill), L (qt., Imp. qt.):

2AZ–FE engine	
With filter	3.8 (4.0, 3.3)
Without filter	3.6 (3.8, 3.2)
3MZ–FE engine	
With filter	4.7 (5.0, 4.1)
Without filter	4.5 (4.8, 4.0)

“Toyota Genuine Motor Oil” is filled in your Toyota vehicle. Use Toyota approved “Toyota Genuine Motor Oil” or equivalent to satisfy the following grade and viscosity.

Oil grade:
API grade SL “Energy–Conserving” or ILSAC multigrade engine oil

Recommended oil viscosity:
SAE 5W–30

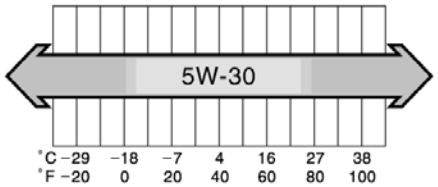

Please contact your Toyota dealer for further details.

COOLING SYSTEM

Total capacity, L (qt., Imp. qt.):

2AZ–FE engine

With rear heater	7.7	(8.1,	6.8)
	8.5	(9.0,	7.5)*
Without rear heater			
	6.3	(6.7,	5.5)
	7.1	(7.5,	6.2)*

3MZ–FE engine

With rear heater	10.7	(11.3,	9.4)
	11.4	(12.0,	10.0)*
Without rear heater			
	9.4	(9.9,	8.3)
	10.1	(10.7,	8.9)*

*: Vehicles with towing package

Coolant type:

“Toyota Super Long Life Coolant” is filled in your Toyota vehicle at factory fill. In order to avoid technical problems, only use “Toyota Super Long Life Coolant” or similar high quality ethylene glycol based non–silicate, non–amine, non–nitrite, and non–borate coolant with long–life hybrid organic acid technology.

Do not use plain water alone.

Please contact your Toyota dealer for further details.

BATTERY

Open voltage* at 20°C (68°F):

12.6—12.8V	Fully charged
12.2—12.4V	Half charged
11.8—12.0V	Discharged

*: Voltage that is checked 20 minutes after the key is removed with all the lights turned off

Charging rates:
5 A max.

AUTOMATIC TRANSAXLE

Fluid capacity (drain and refill), L (qt., Imp. qt.):
Up to 3.5 (3.7, 3.1)

Fluid type:
Toyota Genuine ATF Type T–IV

Change automatic transmission fluid only as necessary.

Generally, it is necessary to change automatic transmission fluid only if your vehicle is driven under one of the Special Operating Conditions listed in your “Scheduled Maintenance Guide” or “Owner’s Manual Supplement”. When changing the automatic transmission fluid, use only “Toyota Genuine ATF Type T–IV” (ATF JWS3309 or NWS6500) to aid in assuring optimum transaxle performance.

Notice: Using automatic transmission fluid other than “Toyota Genuine ATF Type T–IV” may cause deterioration in shift quality, locking up of your transmission accompanied by vibration, and ultimately damage the automatic transmission of your vehicle.

Please contact your Toyota dealer for further details.

TRANSFER
(four–wheel drive models)

Oil capacity, L (qt., Imp. qt.):
0.9 (1.0, 0.8)

Oil type:
Hypoid gear oil API GL–5

Recommended oil viscosity:
Above –18°C (0°F)
SAE 90
Below –18°C (0°F)
SAE 80W or 80W–90

REAR DIFFERENTIAL
(four–wheel drive models)

Oil capacity, L (qt., Imp. qt.):
0.9 (1.0, 0.8)

Oil type:
Hypoid gear oil API GL–5

Recommended oil viscosity:
Above –18°C (0°F)
SAE 90
Below –18°C (0°F)
SAE 80W or 80W–90

BRAKES

Minimum pedal clearance when depressed with the force of 490 N (50 kgf, 110 lbf) with the engine running, mm (in.):
83 (3.3)

Pedal free play, mm (in.):
2—3 (0.08—0.12)

Pad wear limit, mm (in.):
1.0 (0.04)

Lining wear limit, mm (in.):
1.0 (0.04)

Parking brake adjustment when depressed with the force of 294 N (30 kgf, 66 lbf):
5—7 clicks

Fluid type:
SAE J1703 or FMVSS No.116 DOT 3

STEERING

Wheel free play:
Less than 30 mm (1.2 in.)

Power steering fluid type:
Automatic transmission fluid DEXRON®II or III

Tires

Tire size and cold tire inflation pressure:

kPa (kgf/cm^2 or bar, psi)

Tire size	Tire inflation pressure		Wheel size
	Front	Rear	
P225/70R16 101S	210 (2.1, 31)	210 (2.1, 31)	16 × 6 1/2 JJ
225/65R17 101S	210 (2.1, 31)	210 (2.1, 31)	17 × 6 1/2 JJ

When driving under the above load condition at sustained high speeds above 160 km, in countries where such speeds are permitted by–low, inflate the front and rear tires to the following tire inflation pressure provided that it does not exceed the maximum cold tire inflation pressure molded on the tire sidewall.

P225/70R16 101S tires 240 kPa (2.4 kgf/cm^2 or bar, 35 psi)
225/65R17 101S tires 230 kPa (2.3 kgf/cm^2 or bar, 33 psi)

Wheel nut torque, N·m (kgf·m, ft·lbf):
103 (10.5, 76)

NOTE: For a complete information on tires (e.g. replacing tires or replacing wheels), see “Checking tire inflation pressure” through “Aluminum wheel precautions”, pages 377 through 385, in Section 7–2.

Fuses

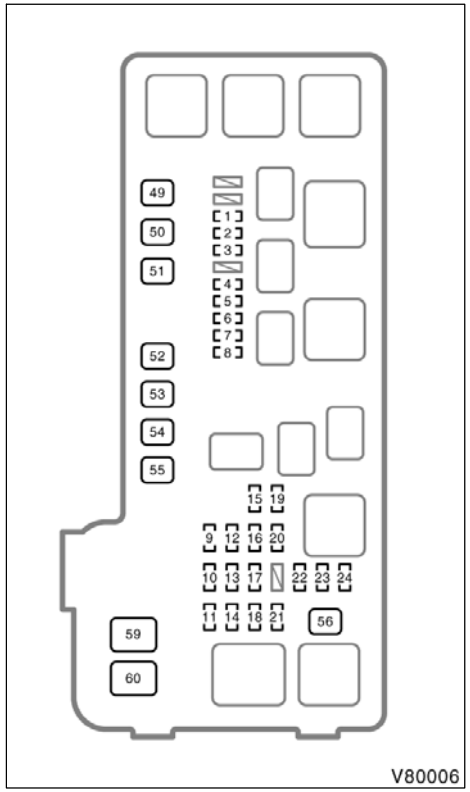

Engine compartment

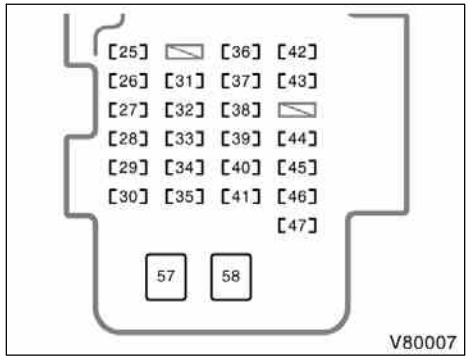

Instrument panel

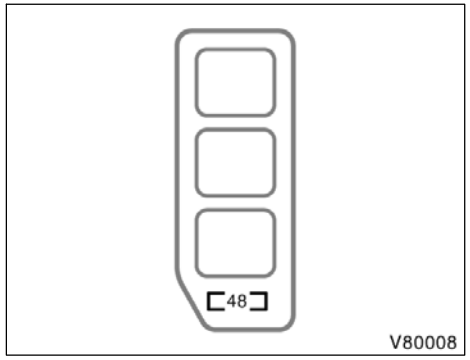

Engine compartment (with daytime running light system)

Fuses (type A)

1. **A/F 25 A:** Air fuel ratio sensor
2. **CRT 7.5 A:** Rear seat entertainment system, navigation system
3. **STARTER 7.5 A:** Multiport fuel injection system/sequential multiport fuel injection system
4. **EFI NO.2 10 A:** Multiport fuel injection system/sequential multiport fuel injection system
5. **ETCS 10 A:** Multiport fuel injection system/sequential multiport fuel injection system
6. **RR HTR 15 A:** Rear air conditioning system
7. **HEAD LP RH LWR 15 A:** Right–hand headlight (low beam)
8. **HEAD LP LH LWR 15 A:** Left–hand headlight (low beam)
9. **ALT–S 7.5 A:** Charging system
10. **POWER OUTLET2 20 A:** Power outlets
11. **TOWING 20 A:** Trailer lights
12. **HORN 10 A:** Horns
13. **SECURITY 15 A:** Theft deterrent system
14. **H–LP RH UPR 10 A:** Right–hand headlight (high beam)
15. **ECU·B 7.5 A:** Theft deterrent system, air conditioning system, gauges and meters, multiplex communication system, electronic moon roof
16. **EFI NO.1 20 A:** Multiport fuel injection system/sequential multiport fuel injection system, fuel pump
17. **DOOR LOCK 25 A:** Power door lock system, theft deterrent system
18. **H–LP LH UPR 10 A:** Left–hand headlight (high beam)
19. **RAD NO.1 25 A:** Car audio system
20. **DOME 10 A:** Personal lights, interior lights, vanity lights, ignition switch light, wireless remote control system, gauges and meters, navigation system
21. **HAZARD 15 A:** Emergency flashers, instrument panel light, trailer lights
22. **SPARE 7.5 A:** Spare fuse
23. **SPARE 15 A:** Spare fuse
24. **SPARE 25 A:** Spare fuse
25. **IGN 10 A:** Gauges and meters, SRS airbag system, multiport fuel injection system/sequential multiport fuel injection system

26. **RAD NO.2 7.5 A:** Car audio system, shift lock system, navigation system, rear seat entertainment system, air conditioning system, multiplex communication system
27. **CIG 15 A:** Cigarette lighter
28. **P RR DOOR 20 A:** Power windows
29. **PWR OUTLET1 15 A:** Power outlets
30. **FR FOG 20 A:** Front fog lights
31. **ECU–IG 10 A:** Electric moon roof, anti–lock brake system, vehicle stability control system, shift lock system, charging system, starting system
32. **WIPER 25 A:** Windshield wipers and washer
33. **D RR DOOR 20 A:** Power windows
34. **D FR DOOR 25 A:** Power windows, door courtesy lights, power door lock system
35. **S/ROOF 20 A:** Electric moon roof
36. **HEATER 10 A:** Air conditioning system, electric cooling fan, rear window defogger, outside rear view mirror defogger, gauges and meters
37. **IG1 7.5 A:** Back–up lights, vehicle stability control system, multiport fuel injection system/sequential multiport fuel injection system, outside rear view mirror heaters, power door lock system, wireless remote control system, navigation system, multiplex communication system
38. **RR WIP 15 A:** Rear window wiper
39. **STOP 20 A:** Stop lights, high mounted stoplight, anti–lock brake system, vehicle stability control system, shift lock system, trailer lights, multiplex communication system, multiport fuel injection system/sequential multiport fuel injection system
40. **OBD 7.5 A:** On–board diagnosis system
41. **SEAT HTR 15 A:** Seat heaters
42. **IG2 15 A:** Multiport fuel injection system/sequential multiport fuel injection system, charging system, starter system
43. **WASHER 20 A:** Low windshield washer fluid level warning light
44. **FR DEF 20 A:** Air conditioning system, outside rear view mirror defoggers
45. **P FR DOOR 20 A:** Power windows, door courtesy lights, multiplex communication system
46. **TAIL 10 A:** Tail lights, license plate lights, instrument panel lights, front fog lights, front side marker lights, rear side marker lights, parking lights
47. **PANEL 7.5 A:** Instrument panel lights, trailer lights
48. **DRL 7.5 A:** Daytime running light system

Fuses (type B)

49. **AM2 30 A:** Multiport fuel injection system/sequential multiport fuel injection system, starting system
50. **ABS2 50 A:** Anti–lock brake system, vehicle stability control system
51. **ABS1 30 A:** Anti–lock brake system, vehicle stability control system
52. **HTR 50 A:** Air conditioning system
53. **RDI 30 A:** Electric cooling fans
54. **RR DEF 30 A:** Rear window defoggers
55. **CDS 30 A:** Electric cooling fans
56. **MAIN 40 A:** “H–LP RH LWR”, “H–LP LH LWR”, “H–LP RH UPR” and “H–LP LH UPR” fuses

57. **AM1 40 A:** Multiport fuel injection system/sequential multiport fuel injection system, starting system
58. **POWER 30 A:** Power seat

Fuse (type C)

59. **ALT 140 A:** “POWER”, “STOP”, “FR DEF”, “FR FOG”, “OBD”, “TAIL”, “PANEL”, “S/ROOF”, “D FR DOOR”, “P FR DOOR”, “D RR DOOR”, “P RR DOOR” and “PWR OUTLET1” fuses
60. **RDI 50 A:** Electric cooling fans

SECTION 9

REPORTING SAFETY DEFECTS FOR U.S. OWNERS

Reporting safety defects for U.S. owners

Reporting safety defects for U.S. owners 408

Reporting safety defects for U.S. owners

If you believe that your vehicle has a defect which could cause a crash or could cause injury or death, you should immediately inform the National Highway Traffic Safety Administration (NHTSA) in addition to notifying Toyota Motor Sales, U.S.A., Inc.
(Toll–free: 1–800–331–4331).

If NHTSA receives similar complaints, it may open an investigation, and if it finds that a safety defect exists in a group of vehicles, it may order a recall and remedy campaign. However, NHTSA cannot become involved in individual problems between you, your dealer, or Toyota Motor Sales, U.S.A., Inc.

To contact NHTSA, you may either call the Auto Safety Hotline toll–free at 1–800–424–9393 (or 366–0123 in Washington, D.C. area) or write to: NHTSA, U.S. Department of Transportation, Washington, D.C. 20590. You can also obtain other information about motor vehicle safety from the Hotline.

Foreword

Welcome to the growing group of value–conscious people who drive Toyotas. We are proud of the advanced engineering and quality construction of each vehicle we build.

This Owner’s Manual explains the operation of your new Toyota. Please read it thoroughly and have all the occupants follow the instructions carefully. Doing so will help you enjoy many years of safe and trouble–free motoring. For important information about this manual and your Toyota, read the following pages carefully.

When it comes to service, remember that your Toyota dealer knows your vehicle best and is interested in your complete satisfaction. He will provide quality maintenance and any other assistance you may require.

If there is not a Toyota dealer near you, or you need emergency assistance for any reason, please call the following number:

● **U.S. OWNERS:**	Toyota Customer Assistance Center	**Toll–free:**	**1–800–331–4331**
● **CANADIAN OWNERS:**	Toyota Canada Customer Interaction Centre	**Toll–free:**	**1–888–TOYOTA–8 (1–888–869–6828)**

Please leave this Owner’s Manual in this vehicle at the time of resale. The next owner will need this information also.

All information and specifications in this manual are current at the time of printing. However, because of Toyota’s policy of continual product improvement, we reserve the right to make changes at any time without notice.

Please note that this manual applies to all models and explains all equipment, including options. Therefore, you may find some explanations for equipment not installed on your vehicle.

TOYOTA MOTOR CORPORATION

© 2003 TOYOTA MOTOR CORPORATION

All rights reserved. This material may not be reproduced or copied, in whole or in part, without the written permission of Toyota Motor Corporation.

¿U –5

Quick index

- If a service reminder indicator or warning buzzer comes on 129
- If your vehicle will not start 324
- If your engine stalls while driving 327
- If your vehicle overheats 328
- If you have a flat tire 329
- If your vehicle needs to be towed 341
- Tips for driving during break–in period 283
- How to start the engine 310
- General maintenance 359

Gas station information

Fuel type:

2AZ–FE engine: UNLEADED gasoline, Octane Rating 87 (Research Octane Number 91) or higher

3MZ–FE engine: UNLEADED gasoline, Octane Rating 87 (Research Octane Number 91) or higher
For improved vehicle performance, the use of premium unleaded gasoline with an Octane Rating of 91 (Research Octane Number 96) or higher is recommended.

See page 283 for detailed information.

Fuel tank capacity:
72.5 L (19.1 gal., 16.0 Imp.gal.)

Engine oil:
API grade SL “Energy–Conserving” or ILSAC multigrade engine oil is recommended.

See page 373 for detailed information.

Tire information: See pages 377 through 385.

Tire inflation pressure: See page 402.

Publication No. OM48478U
Part No. 01999-48478
Printed in Japan 01–0308–00 C
¿¿¿¿¿¿ **(¿¿U)**

Important information about this manual

Safety and vehicle damage warnings

Throughout this manual, you will see safety and vehicle damage warnings. You must follow these warnings carefully to avoid possible injury or damage.

The types of warnings, what they look like, and how they are used in this manual are explained as follows:

⚠ CAUTION

This is a warning against anything which may cause injury to people if the warning is ignored. You are informed about what you must or must not do in order to reduce the risk of injury to yourself and others.

NOTICE

This is a warning against anything which may cause damage to the vehicle or its equipment if the warning is ignored. You are informed about what you must or must not do in order to avoid or reduce the risk of damage to your vehicle and its equipment.

Safety symbol

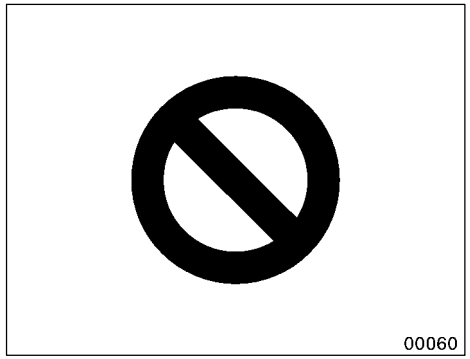

When you see the safety symbol shown above, it means: “Do not...”; “Do not do this”; or “Do not let this happen”.

Important information about your Toyota

Occupant restraint systems

Toyota encourages you and your family to take the time to read Section 1–3 of this Owner’s Manual carefully. In terms of helping you understand how you can receive the maximum benefit of the occupant restraint systems this vehicle provides, Section 1–3 of this Owner’s Manual is the most important Section for you and your family to read.

Section 1–3 describes the function and operation concerning seats, seat belts, SRS airbags and child restraint systems of this vehicle and some potential hazards you should be aware of. These systems work together along with the overall structure of this vehicle in order to provide occupant restraint in the event of a crash. The effect of each system can be enhanced when it is used properly and together with other systems. No single occupant restraint system can, by itself, provide you or your family with the equal level of restraint which these systems can provide when used together. That is why it is important for you and your family to understand the purpose and proper use of each of these systems and how they relate to each other.

The purpose of all occupant restraint systems is to help reduce the possibility of death or serious injury in the event of a collision. None of these systems, either individually or together, can ensure that there is no injury in the event of collision. However, the more you know about these systems and how to use them properly, the greater your chances become of surviving an accident without death or serious injury.

Seat belts provide the primary restraint to all occupants of the vehicle, and every occupant of the vehicle should wear seat belts properly at all times. Children should always be secured in child restraint systems that are appropriate for their age and size. SRS (Supplemental Restraint System) airbags are, as their names imply, designed to work with, and be supplemental to, seat belts and are not substitutes for them. SRS airbags can be very effective in reducing the risk of head and chest injuries by preventing contact of the head and chest with interior portions of the vehicle.

In order to be effective, the SRS airbags must deploy with tremendous speed. The rapid deployment of the SRS airbags makes the SRS airbags themselves potential sources of serious injury if an occupant is too close to an airbag, or if an object or some part of his or her body has been placed between the occupant and the airbag at the time of deployment. This is just one example of how the instructions in Section 1–3 of this Owner’s Manual will help ensure proper use of the occupant restraint systems, and increase the safety they can provide to you and your family in the event of an accident.

Toyota recommends you to read the provisions in Section 1–3 carefully and refer to them as needed during your time of ownership of this vehicle.

New vehicle warranty

Your new vehicle is covered by the following Toyota limited warranties:

- New vehicle warranty
- Emission control systems warranty
- Others

For further information, please refer to the “Owner’s Warranty Information Booklet” or “Owner’s Manual Supplement”.

Your responsibility for maintenance

It is the owner’s responsibility to make sure that the specified maintenance is performed. Section 6 gives details of these maintenance requirements. Also included in Section 6 is general maintenance. For scheduled maintenance information, please refer to the “Scheduled Maintenance Guide” or “Owner’s Manual Supplement”.

Important health and safety information about your Toyota

⚠ CAUTION

- **WARNING: Engine exhaust, some of its constituents, and a wide variety of automobile components contain or emit chemicals known to the State of California to cause cancer and birth defects and other reproductive harm. In addition, oils, fuels and fluids contained in vehicles as well as waste produced by component wear contain or emit chemicals known to the State of California to cause cancer and birth defects or other reproductive harm.**
- **Battery posts, terminals and related accessories contain lead and lead compounds. Wash your hands after handling. Used engine oil contains chemicals that have caused cancer in laboratory animals. Always protect your skin by washing thoroughly with soap and water.**

Accessories, spare parts and modification of your Toyota

A wide variety of non–genuine spare parts and accessories for Toyota vehicles are currently available in the market. You should know that Toyota does not warrant these products and is not responsible for their performance, repair, or replacement, or for any damage they may cause to, or adverse effect they may have on, your Toyota vehicle.

This vehicle should not be modified with non–genuine Toyota products. Modification with non–genuine Toyota products could affect its performance, safety or durability, and may even violate governmental regulations. In addition, damage or performance problems resulting from the modification may not be covered under warranty.

Spark ignition system of your Toyota

The spark ignition system in your Toyota meets all requirements of the Canadian Interference–Causing Equipment Standard.

Installation of a mobile two–way radio system

As the installation of a mobile two–way radio system in your vehicle could affect electronic systems such as multiport fuel injection system/sequential multiport fuel injection system, electronic throttle control system, cruise control system, anti–lock brake system, traction control system, vehicle stability control system, SRS airbag system and seat belt pretensioner system, be sure to check with your Toyota dealer for precautionary measures or special instructions regarding installation.

Tires and loading on your Toyota

Underinflated or overinflated tire pressure and the excess load may result in the deterioration of steering ability and braking ability, leading to an accident. Check the tire inflation pressure periodically and be sure to keep the load limits given in this Owner’s Manual. For details about tire inflation pressure and load limits, see pages 377 and 304.

Scrapping of your Toyota

The SRS airbag and seat belt pretensioner devices in your Toyota contain explosive chemicals. If the vehicle is scrapped with the airbags and pretensioners left as they are, this may cause an accident such as fire. Be sure to have the systems of the SRS airbag and seat belt pretensioner removed and disposed of by the qualified service shop or by your Toyota dealer before you dispose of your vehicle.

On–pavement and off–road driving tips

This vehicle belongs to the utility vehicle class. Utility vehicles have a significantly higher rollover rate than other types of vehicles. This vehicle will handle and maneuver differently from an ordinary passenger car because it is designed for off–road use also. In addition, this vehicle has a higher ground clearance and center of gravity than that of an ordinary passenger car. This vehicle design feature causes this type of vehicle to be more likely to rollover. Failure to operate this vehicle correctly may result in loss of control, accidents or vehicle rollover causing death or serious injury. Be sure to read “Off–road vehicle precautions” on page 282 in Section 2 and “Off–road driving precautions” on page 312 in Section 3.

Leak detection pump (2AZ–FE engine)

This pump performs fuel evaporation leakage check. This check is done approximately five hours after the engine is turned off. So you may hear sound coming from underneath the luggage compartment for several minutes. It does not indicate a malfunction.

You should know as much about the quality and importance of proper maintenance of your new vehicle as the people who built it.

The Toyota authorized Repair Manual tells you how to maintain your vehicle and enables you to correctly perform your own maintenance.

The best way to keep your new vehicle in top running order is to maintain it properly from the moment you drive it off the showroom floor.
The Toyota authorized Repair Manual is packed with literally everything you need to know to perform your own maintenance in virtually every area of your new vehicle.

Maintenance procedures for the engine, chassis, body, electrical system, and more, are clearly explained and illustrated.

Periodic maintenance and tune–up

Periodic maintenance and tune–up helps to prevent small problems from growing into larger ones later on. The repair manual outlines exactly what maintenance is required and clearly explains how to do the work yourself step–by–step.
Areas covered include such things as spark plug replacement, valve clearance adjustment and engine oil and filter replacement.

Where to obtain the Repair Manual

The repair manual for HIGHLANDER, written in English, may be purchased as applicable from any Toyota dealer.
Pub. Name: 2004 HIGHLANDER Repair Manual
Pub. No.: RM1086U1
RM1086U2

WE REALLY CARE ABOUT YOU — PLEASE BUCKLE UP

Toyota has made a special effort to encourage use of seat belts.

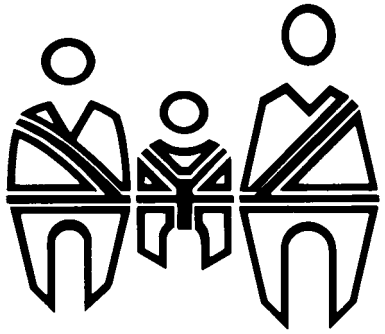

Toyota belts are:

- **Comfortable**
- **Easy to use**
- **Convenient**

We encourage you to use your belts every time you drive.