Kia, THE COMPANY

Thank you for becoming the owner of a new Kia vehicle.

As a global car manufacturer focused on building high-quality vehicles with exceptional value, Kia Motors is dedicated to providing you with a customer service experience that exceeds your expectations.

All information contained in this Owner's Manual was accurate at the time of publication. However, Kia reserves the right to make changes at any time so that our policy of continual product improvement can be carried out.

This manual applies to all trims of this vehicle and includes images, descriptions, and explanations of optional as well as standard equipment. As a result, some material in this manual may not be applicable to your specific Kia vehicle. Some images are shown for illustration only and may show features that differ from those on your vehicle.

Drive safely and enjoy your Kia!

Thank you for choosing a Kia vehicle.

When you require service, remember that your Kia dealer knows your vehicle best. Your dealer has factory-trained technicians, recommended special tools and genuine Kia replacement parts. It is dedicated to your complete customer satisfaction.

Because subsequent owners require this important information as well, this publication should remain with the vehicle if it is sold.

This manual will familiarize you with operational, maintenance and safety information about your new vehicle. It is supplemented by a Warranty and Consumer Information manual that provides important information on all warranties regarding your vehicle.

We urge you to read these publications carefully and follow the recommendations to help assure enjoyable and safe operation of your new vehicle.

Kia offers a great variety of options, components and features for its various models. Therefore, some of the equipment described in this manual, along with the various illustrations, may not be applicable to your particular vehicle.

The information and specifications provided in this manual were accurate at the time of printing. Kia reserves the right to discontinue or change specifications or design at any time without notice and without incurring any obligation. If you have questions, always check with your Kia dealer.

We assure you of our continuing interest in your motoring pleasure and satisfaction in your Kia vehicle.

© 2020 Kia Canada Inc.

All rights reserved. Reproduction by any means, electronic or mechanical, including photocopying, recording, or by any information storage and retrieval system or translation in whole or part is not permitted without written authorization from Kia Canada Inc..

Printed in Korea

HOW TO USE THIS MANUAL

We want to help you get the greatest possible driving pleasure from your vehicle. Your Owner's Manual can assist you in many ways. We strongly recommend that you read the entire manual. In order to minimize the chance of death or injury, you must read the WARNING and CAUTION sections in the manual.

Illustrations complement the words in this manual to best explain how to enjoy your vehicle. By reading your manual, you will learn about features, important safety information, and driving tips under various road conditions.

The general layout of the manual is provided in the Table of Contents. Use the index when looking for a specific area or subject; it has an alphabetical listing of all information in your manual.

Sections: This manual has nine sections plus an index. Each section begins with a brief list of contents so you can tell at a glance if that section has the information you want.

You will find various WARNINGs, CAUTIONs, and NOTICEs in this manual. These WARNINGs were prepared to enhance your personal safety. You should carefully read and follow ALL procedures and recommendations provided in these WARNINGs, CAUTIONs and NOTICEs.

⚠ WARNING

A WARNING indicates a situation in which harm, serious bodily injury or death could result if the warning is ignored.

⚠ CAUTION

A CAUTION indicates a situation in which damage to your vehicle could result if the caution is ignored.

✻ NOTICE

A NOTICE indicates interesting or helpful information is being provided.

TABLE OF CONTENTS

Introduction	1
Your vehicle at a glance	2
Safety features of your vehicle	3
Features of your vehicle	4
Driving your vehicle	5
What to do in an emergency	6
Maintenance	7
Specifications, Consumer information and Reporting safety defects	8
Index	I

Hybrid System Overview

HEV (HYBRID ELECTRIC VEHICLE) SYSTEM / H2
PHEV (PLUG-IN ELECTRIC VEHICLE) SYSTEM / H3
CHARGING THE PLUG-IN HYBRID VEHICLE / H4
DRIVING THE HYBRID/PLUG-IN HYBRID VEHICLE / H28
ENERGY FLOW / H36
PLUG-IN HYBRID ENERGY FLOW / H38
STARTING THE HYBRID/PLUG-IN HYBRID VEHICLE (SMART KEY) / H40
COMPONENTS OF THE HYBRID/PLUG-IN HYBRID VEHICLE / H42

HEV (HYBRID ELECTRIC VEHICLE) SYSTEM

The Kia Hybrid Electric Vehicle (HEV) uses both the gasoline engine and the electric motor for power. The electric motor is run by a 240V high-voltage HEV battery.

Depending on the driving conditions, the HEV computer selectively operates between the engine and the electric motor or even both at the same time.

Fuel efficiency increases when the engine is at idle, or when the vehicle is driven by the electric motor with the HEV battery.

The HEV battery charge must be maintained because, at times, the engine may come on even at idle to act as a generator. Charging also occurs when decelerating or by regenerative braking.

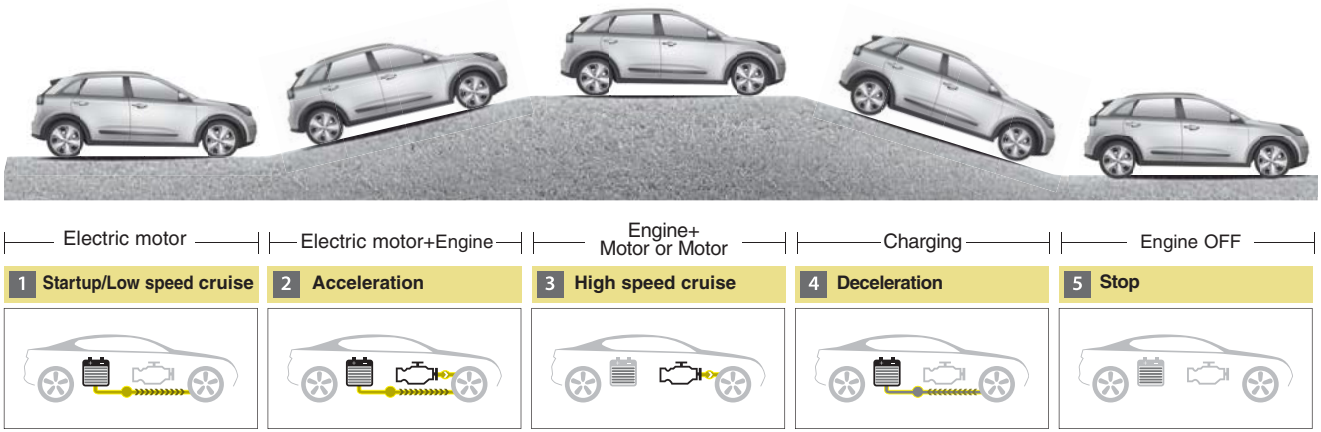

ODEP057140L

PHEV (PLUG-IN ELECTRIC VEHICLE) SYSTEM

The Kia Plug-in Hybrid Electric Vehicle (PHEV) shares the characteristics of both a conventional hybrid electric vehicle and an all-electric vehicle.

When used as a conventional hybrid electric vehicle, the HEV computer selectively operates between the engine and the electric motor or even both at the same time.

When it is operating in the electric vehicle mode, the vehicle is driven only using the electric motor over a certain distance until the hybrid battery becomes low. The driving distance in EV mode depends on customer driving style and road conditions. Aggressive driving maneuvers may at times temporarily enable the engine to operate for maximum power.

The hybrid battery can be fully charged by connecting a plug to an external electric power source.

The engine can be turned on based on a number of factors such as heater usage and a frequent operation of the accelerator pedal by a driver in Charge Depleting mode.

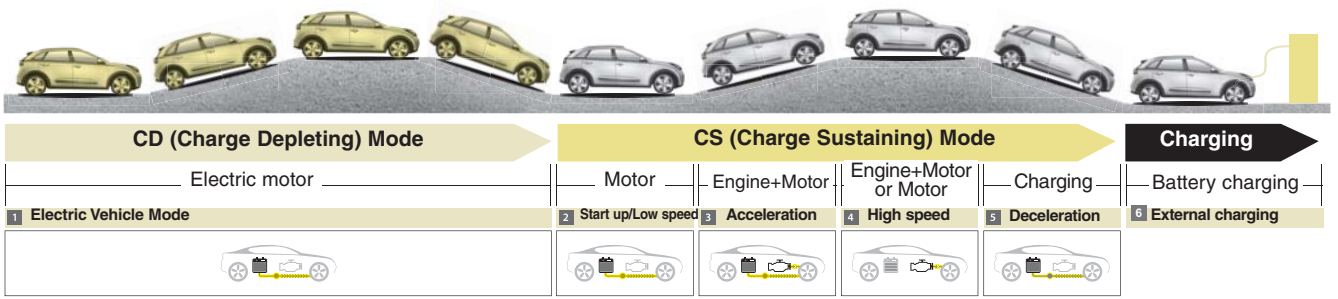

ODEP057141L

CHARGING THE PLUG-IN HYBRID VEHICLE

Charging Information

- AC Charger: The plug-in hybrid vehicle is charged by plugging into a AC Charger installed in your home or a public charging station. (For further details, refer to the 'AC Charge'.)
- Trickle Charger: The plug-in hybrid vehicle can be charged by using household electricity.

Charging Types

The electrical outlet in your home must comply with regulations and can safely accommodate the Voltage / Current (Amps) / Power (Watts) ratings specified on the trickle charge. Use only as a back-up charger.

Charging Time

- AC Charger: Takes about 2 hours 15 minutes at room temperature (Can be charged to 100%.).

Depending on the condition and durability of the high-voltage battery, charger specifications, and ambient temperature, the time required for charging the high-voltage battery may vary.

- Trickle Charger: For charging at home. Please note that the Trickle Charger is slower than the AC Charger.

Category	Charging Inlet (Vehicle)	Charging Connector	Charging Outlet	Charging Method	Charging Time
AC Charger	ODEPQ017018	ODEPQ017019	OJFHPQ016021L	AC Charger installed in homes or public charging stations	Approximately 2 hours 15 minutes (to fully charge the plug-in hybrid,100%)
Trickle Charger	ODEPQ017018	ODEPQ017019	OAEEQ016024	Household current	For charging at home. The included Trickle charger takes about 9 hours at room temperature (Can be charged to 100%.).

- Depending on the condition and durability of the high voltage battery, charger specifications, and ambient temperature, the time required for charging the high voltage battery may vary.
- Actual charger image and charging method may vary in accordance with the charger manufacturer.

Charging Status

You can check the charging status from the outside of vehicle when charging or using (it is not driving status) the high-voltage battery.

① : Charging indicator lamp

Operation of Charging Indicator Lamp (1)	Charging Status
Turns on (Green)	Charging in progress
Turns off	Not Charging or fully charged
Slowly blinks (Green) and then turns off (repeat for 3 minutes)	Reserved charging is operating (turns OFF after 3 minutes) or interruptions that temporarily prevent charging (e.g. power failure)
Quickly blinks(Green) and then turns off (repeats during operation)	Aux. Battery Saver + operating in progress
Slowly blinks (Red)	Malfunction

Charging Connector AUTO/LOCK Mode

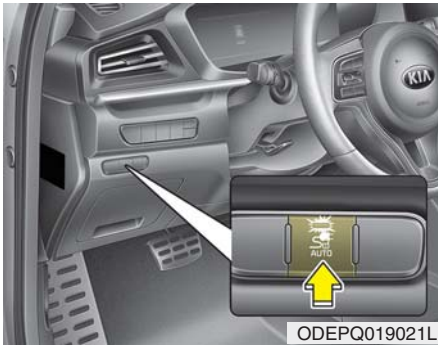

You may select when the charging connector can be locked and unlocked in the charging inlet.

Press the button AUTO to change between AUTO mode and LOCK mode.

When the Charging Connector is Locked

	LOCK	AUTO
Before charging	O	X
While charging	O	O
Finished charging	O	X

AUTO/LOCK mode button indicator

LAMP OFF	LAMP ON
LOCK mode	AUTO mode

- LOCK mode (button indicator off) :

  The connector locks when the charging connector is plugged into the charging inlet. The connector is locked until all doors are unlocked by the driver. This mode can be used to prevent charging cable theft.

  - If the charging connector is unlocked when all doors are unlocked, but the charging cable is not disconnected within 15 seconds, the connector will be automatically locked again.
  - If the charging connector is unlocked when all doors are unlocked, but all doors are locked again, immediately, the connector will be automatically locked again.

- AUTO mode (button indicator on) :

  The connector locks when charging starts. The connector unlocks when charging is complete. This mode can be used when charging in a public charging station.

  If the connector does not unlock automatically after the charging is completed in AUTO mode, the connector will unlock when all the doors are unlocked.

❋ Charging connector AUTO/LOCK mode

When the charging connector is plugged into the charging inlet, the connector lock timing varies with the modes selected by pressing the button.

- LOCK mode : The connector locks automatically when the charging connector is connected normally.
- AUTO mode : The connector locks when charging and automatically unlocks when charging is completed.

❊For more details, refer to the “Charging connector AUTO/LOCK mode”.

❊ Locking/unlocking the charging door

The charging door lock/unlock function works only when the following conditions are satisfied with the charging door closed.

If the unlock function does not work, use the emergency charging door unlock method to unlock the charging door. (For more details, refer to the “Unlock charging door in emergency”)

1. Conditions for lock :
   - ① : When locking doors from outside the vehicle with the charging door closed.
   - ② : When locking the driver’s door using a mechanical key
   - ③ : When locking doors using a smart key
   - ④ : When pressing the door lock/unlock button on the front door outside handle while the smart key is detected and doors are unlocked
   - ⑤ : When locking all vehicle doors with the charging door closed. (When locking doors with functions such as spare key, smart key, door lock button on the outside door handle, central door lock switch, auto door lock.)

2. Conditions for unlock :
   - ① : When unlocking doors from outside the vehicle with the charging door closed.
   - ② : When unlocking the driver’s door using a mechanical key
   - ③ : When unlocking doors using a smart key
   - ④ : When pressing the door lock/unlock button on the front door outside handle while the smart key is detected and doors are locked
   - ⑤ : When unlocking all vehicle doors with the charging door closed. (When unlocking doors with functions such as spare key, smart key, door lock button on the outside door handle, central door lock switch, auto door lock.)

Scheduled Charging (if equipped)

- You can set reserved charging using the Infotainment System.

  Refer to the Infotainment System for detailed information about setting reserved charging.
- Scheduled charging can only be done when using a AC Charger or the portable charging cable (ICCB: In-Cable Control Box).

- When scheduled charging is set and the AC Charger or the portable charging cable (ICCB: In-Cable Control Box) is connected for charging, the indicator lamp blinks (for 3 minutes) to indicate that scheduled charging is set.
- When scheduled charging is set, charging is not initiated immediately when the AC Charger or portable charging cable (ICCB: In-Cable Control Box) is connected.
- If charging is required immediately, turn off the scheduled charge using the Infotainment System or UVO eco smartphone application or press the vehicle's scheduled charge release button(OFF).
- When the scheduled charge is set, the charge start time is calculated by itself. In some cases, charging may start immediately after connecting the charger.

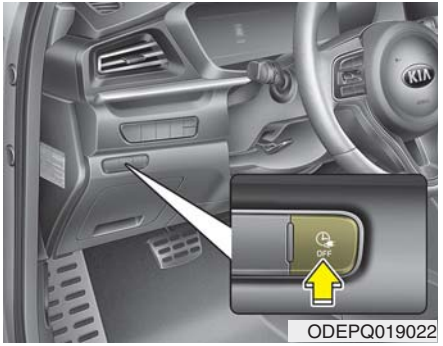

- If you press the scheduled charging deactivation (OFF) button to immediately charge the battery, charging must be initiated 3 minutes after the charging cable has been connected.

  When you press the scheduled charging deactivation (OFF) button for immediate charging, the scheduled charge setting is not completely deactivated. If you need to completely deactivate the scheduled charge setting, use the Infotainment System to finalize the deactivation.

Refer to "AC Charge or Trickle Charge" for details about connecting the AC Charger and the portable charger (ICCB: In-Cable Control Box).

Charging Precautions

■ AC Charger

⚠ WARNING

- Fires caused by dust or water

Do not connect the charging cable connector plug to the vehicle if there is water or dust on the charging inlet. Connecting while there is water or dust on the charging cable connector and plug may cause a fire or electric shock.

⚠ WARNING
- Interference with electronic medical devices

When using medical electric devices such as an implantable cardiac pacemaker, make sure to ask the medical team and manufacturer whether charging your electric vehicle will impact the operation of the medical devices. In some instances, electromagnetic waves that are generated from the charger can seriously impact medical electric devices such as an implantable cardiac pacemaker.

⚠ WARNING
- Old or Worn out Electric Outlets

Do not use old or worn out electric outlets to charge your vehicle. There may be a risk of fire and injury when using old worn out public electrical outlets.

⚠ WARNING
- Touching the charging connector

Do not to touch the charging connector, charging plug, or the charging inlet when connecting the charger connecting cable to the charging outlet and the charging inlet on the vehicle. Doing so may result in electrocution.

- Comply with the following in order to prevent electrical shock when charging:
  - Use a waterproof charger
  - Make sure to not touch the charging connector and charging plug when your hand is wet
  - Do not charge when there is lightning
  - Do not charge when the charging connector and plug is wet

⚠ WARNING - Charging cable

- **Immediately stop charging when you discover abnormal symptoms (smell, smoke).**
- **Replace the charging cable if the cable coating is damaged to prevent electrical shock.**
- **When connecting or removing the charging cable, make sure to hold the charging connector handle.**

(Continued)

(Continued)

If you pull the cable itself (without using the handle), the internal wires may disconnect or get damaged. This may lead to electric shock or fire.

⚠ WARNING - Cooling fan

Do not touch the cooling fan while vehicle is charging. When the vehicle is switched OFF while charging, the cooling fan inside the engine compartment or interior rear seat may automatically operate.

⚠ WARNING

Make sure to use the designated charger for charging the vehicle. Using any other charger may cause failure or lead to electric shock or fire.

- Always keep the charging connector and charging plug clean and dry. Be sure to keep the charging cable in a condition where there is no water or moisture.
- Before charging the battery, turn the vehicle OFF.
- Be careful not to drop the charging connector. The charging connector can be damaged.
- Always inspect the charging connector terminals for damage or overheating. Do not use if damaged, as this may damage the vehicle side charge connector and is not a warrantable repair.

AC Charge

■ AC Charger

OJFHPQ016021L

■ AC Charger cable

OAEEQ016028

You can charge your vehicle by plugging into a public charger at a charging station.

How to Connect to an AC charger

1. Depress the brake pedal and apply the parking brake.
2. Turn OFF all switches, move the shift lever to P (Park), and turn OFF the vehicle.
3. After unlocking doors, open the charging door by pressing it.
4. Open the charging door by pressing circle mark (o) area on the right edge of the charging door.

   If the vehicle doors are locked, the charging door will not open.

✻ NOTICE

The charging door does not open if the door are locked/theft alarm system is armed.

5. Remove any dust on the charging connector and charging inlet.
6. Hold the charging connector handle. Then, insert it into the charging inlet, until you hear a click sound. If it is not fully connected, a bad connection between the charging connector and the charging terminals may cause a fire.

■ Type A

ODEPQ019027

■ Type B

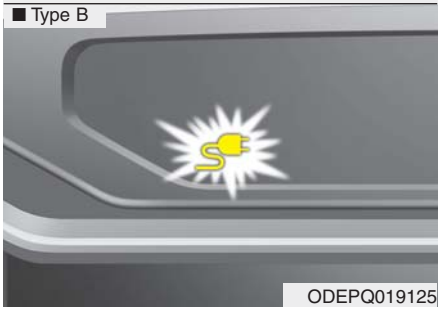

ODEPQ019125

7. Check if the charging cable connection indicator of the high voltage battery in the instrument cluster is turned ON.

   Charging does not occur when the indicator is OFF. When the charging connector is not connected properly, reconnect the charging cable to charge.

✻ NOTICE

- **Charging is in progress only when the shift lever is in P (Park). Charging the battery with the Engine Start/Stop button in the ACC position is possible. However, it may discharge the 12-V battery. Thus, if possible, charge the battery with the Engine Start/Stop button in the OFF position.**
- **The charging process is interrupted temporarily when the shift lever is moved from P (Park) to Not P(R (Reverse)/N (Neutral)/D (Drive)) during charging. To resume(restart) charging, move the shift lever to the P (park) position. Then, the charging process is resumed(restarted).**

ODEPQ017028L

8. After charging has started, the estimated charging time is displayed on the instrument cluster for about 1 minute. It is also displayed, when the driver's door is opened with charging in progress. When scheduled charging is set, the estimated charging time is displayed as "--" .

Unlock Connector in Emergency

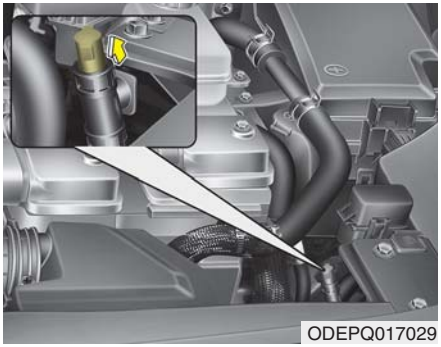
ODEPQ017029

If the charging connector does not unlock for some reason, open the hood and slightly pull the emergency cable as shown above. The charging door will then open.

If the charging door does not opened immediately after pulling the emergency cable in, press the charging door lightly and pull the emergency cable again.

The charging cable lock may not work properly when foreign materials such as dust enter the cable or the cable is encrusted with ice.

In that case, the charging cable may not be disconnected or locked, or the vehicle may not be charged. If this happens, open the hood and pull the emergency cable lightly 2 to 3 times and then try to disconnect the charging cable or start recharging.

Charging Status

Checking Charging Status

ODEP047020N

You can check the charging status from outside of vehicle when charging the high-voltage battery.

Operation of Charging Indicator Lamp (1)	Charging Status
Turns on (Green)	Charging in progress
Turns off	Not Charging or fully charged
Slowly blinks (Green) and then turns off (repeat for 3 minutes)	Waiting for scheduled charging (turns off after 3 minutes)
Quickly blinks(Green) and then turns off (repeats during operation)	Aux. Battery Saver + operating in progress
Slowly blinks (Red)	Malfunction

How to Disconnect an AC charger

1. The vehicle must be in the AUTO mode or the doors must be unlocked in order to be able to disconnect the charging connector. A lock system prevents charger cable disconnection when the vehicle's doors are locked.

⚠ CAUTION

In order to disconnect the charging connector, unlock the doors to unlatch the charging connector lock system. If not, the charging connector and the vehicle's charging inlet may be damaged.

ODEPQ017031

2. While holding the charging connector, pressing the locking release button (1) and then pull it out.

To prevent charging cable theft, the charging connector cannot be disconnected from the inlet when the doors are locked. Unlock all doors to disconnect the charging connector from the inlet.

However, if the vehicle is in the charging connector AUTO mode, the charging connector automatically unlocks from the inlet when charging is completed.

If the connector does not unlock automatically after the charging is completed in AUTO mode, the connector will unlock when all the doors are unlocked.

For more details, refer to “Charging Connector AUTO/ LOCK Mode” in this chapter.

⚠ CAUTION

When disconnecting the charging connector, do not try to disconnect it by force while not pressing the release button. This may damage the charging connector and vehicle charging inlet.

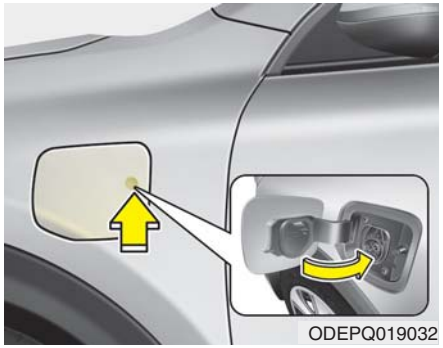

3. Make sure to securely close the charging door.

⚠ WARNING

Do not modify or disassemble the charging cable components. Doing so may cause a fire or electric shock resulting in personal injuries.

✻ NOTICE

- **Keep the charging connector and the charging plug clean and dry. The charging cable should also be kept dry.**
- **Use an air gun to blow any foreign substances from the charging connector and the charging plug.**

Trickle Charger (Portable Charging Cable)

Trickle charger can be used if AC Charger is unavailable.

❊ ① : Plug and cable
② : Control box (ICCB)
③ : Charging connector/cable

How to Connect Portable Charging Cable (ICCB: In-Cable Control Box)

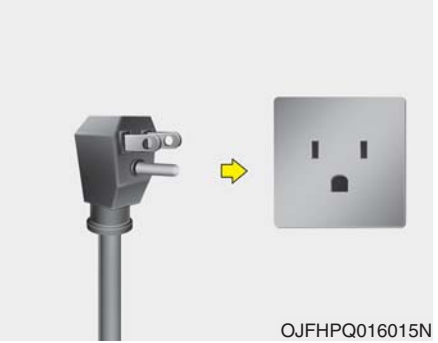

1. Turn OFF all switches, move the shift lever to P (Park), and turn OFF the vehicle.
2. Depress the brake pedal and apply the parking brake.

3. After unlocking doors, open the charging door by pressing it.
4. Open the charging door by pressing circle mark (o) area on the right edge of the charging door.

   If the vehicle doors are locked, the charging door will not open.

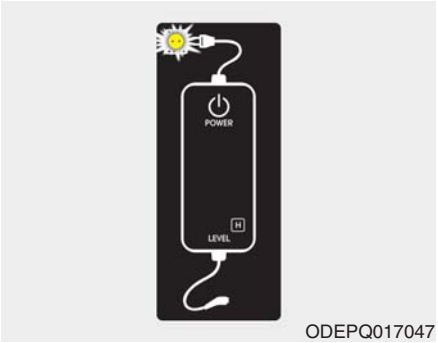

ODEPQ017047

5. Connect the plug to a household electric outlet.
6. Make sure that the power connection indicator (green) lights in the control box.

✻ NOTICE

The charging door does not open when the theft alarm system is armed.

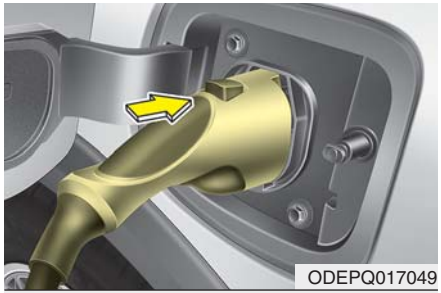
ODEPQ017049

■ Vehicle connection

ODEPQ017048

7. Remove any dust on the charging connector and charging inlet.
8. Hold the charging connector handle. Then, insert it into the charging inlet, until you hear a click sound. If it is not fully connected, improper connection between the charging connector and the charging terminals are a potential fire hazard.

■ Charge

ODEPQ017035

9. Charging starts automatically and the charging light blinks.

■ Type A

ODEPQ019027

■ Type B

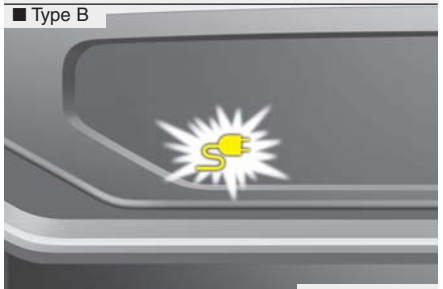

ODEPQ019125

10. Check if the charging cable connection indicator of the high voltage battery in the instrument cluster is turned ON.

Charging does not occur when the indicator is OFF. When the charging connector is not connected properly, reconnect the charging cable to charge.

✻ NOTICE

- **The charging is in progress only with the shift lever is in P (Park). Charging the battery with the Engine Start/Stop button in the ACC position is possible. However, it may discharge the 12-V battery. Thus, if possible, charge the battery with the Engine Start/Stop button in the OFF position.**
- **Moving the shift lever from P (Park) to R (Reverse)/N(Neutral)/D (Drive) stops the charging process. To restart the charging process, move the shift lever to P (Park), press the Engine Start/Stop button to the OFF position, and disconnect the charging cable. Then, connect the charging cable and restart the vehicle again.**

ODEPQ017028L

11. After charging has started, the estimated charging time is displayed on the instrument cluster for about 1 minute. It is also displayed, when the driver's door is opened with charging in progress. When scheduled charging is set, the estimated charging time is displayed as "--".

Unlock Connector in Emergency

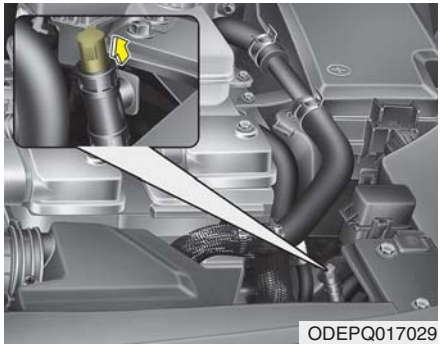
ODEPQ017029

If the charging connector does not unlock for some reason, open the hood and slightly pull the emergency cable as shown above. The charging door will then open.

If the charging door does not opened immediately after pulling the emergency cable, press the charging door lightly and pull the emergency cable again.

The charging cable lock may not work properly when foreign materials such as dust enter the cable or the cable is encrusted with ice.

In that case, the charging cable may not be disconnected or locked, or the vehicle may not be charged. If this happens, open the hood and pull the emergency cable lightly 2 to 3 times and then try to disconnect the charging cable or start recharging.

Charging Status

ODEP047020N

You can check the charging status from outside of vehicle when charging the high-voltage battery.

Operation of Charging Indicator Lamp (1)	Charging Status
Turns on (Green)	Charging in progress
Turns off	Not charged or fully charged
Slowly blinks (Green) and then turns off (repeat for 3 minutes)	Waiting for scheduled charging (turns off after 3 minutes)
Quickly blinks(Green) and then turns off (repeat during operation)	Aux. Battery Saver + operating in progress
Slowly blinks (Red)	Malfunction

Charge cable storage

ODEPQ017033

We recommend that the trickle charger cable be put in a storage box after use.

Charging Status Indicator Lamp for Portable Charging Cable

Control Box	Indicator		Details
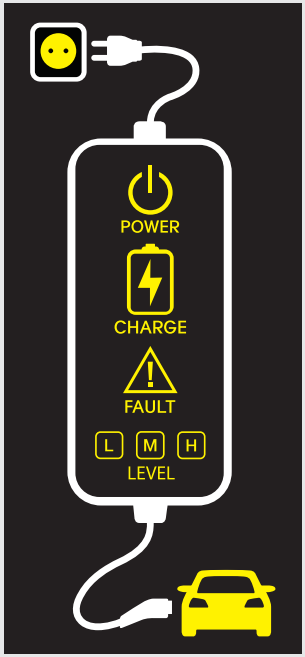	PLUG	(Green)	On : Power on Blink : Plug temperature sensor failure
		(Red)	On : Plug high temperature protection Blink : Plug high temperature warning
	POWER	POWER	On : Power on
	CHARGE	CHARGE	Blink : Charging In power saving mode, only the CHARGE indicator is illuminated.
	FAULT	FAULT	Blink : Charging interrupted
	CHARGE LEVEL	H	Charging current 12A
		M	Charging current 10A
		L	Charging current 8A
	VEHICLE	(Green)	Charging connector plugged
		(Blue)	Charging
		(Red)	Blink : Not charging

Charging Status Indicator Lamp for Portable Charging Cable

NO	Control Box	Status / Diagnosis / Countermeasure	NO	Control Box	Status / Diagnosis / Countermeasure
1		Have your vehicle inspected by an authorized Kia dealer if any of the following occur: • Charging connector plugged into vehicle (Green ON) • Plug temperature sensor failure (Green blink) • Plug high temperature protection (Red blink) • Plug high temperature warning (Red ON)	2		- Charging connector plugged into the vehicle (Green ON)
3		- While charging • Charge indicator (Green blink) • Vehicle indicator (Blue ON)	4		Have your vehicle inspected by an authorized Kia dealer if any of the following occur: - Before plugging charging connector into the vehicle (Red blink) • Abnormal temperature • ICCB (In-Cable Control Box) failure

CHARGING THE PLUG-IN HYBRID VEHICLE (CONT.)

NO	Control Box	Status / Diagnosis / Countermeasure	NO	Control Box	Status / Diagnosis / Countermeasure
5		Have your vehicle inspected by an authorized Kia dealer if any of the following occur: - Plugged into the vehicle (Red blink) • Diagnostic device failure • Current leakage • Abnormal temperature	6		- After plugging charging connector into vehicle (Red blink) • Communication failure Have your vehicle inspected by an authorized Kia dealer.
7		Have your vehicle inspected by an authorized Kia dealer if any of the following occur: • Plug temperature sensor failure (Green blink) • Plug high temperature protection (Red blink) • Plug high temperature warning (Red ON)	8		- Power saving mode • 3 minutes after charging starts (Green blink)

How to Disconnect the Portable Charging Cable (ICCB: In-Cable Control Box)

1. Before disconnecting the charging connector, make sure the doors are unlocked. When the door is locked, the charging connector lock system will not allow disconnection. To prevent charging cable theft, the charging connector cannot be disconnected from the inlet when the doors are locked. Unlock all doors to disconnect the charging connector from the inlet. However, if the vehicle is in the charging connector AUTO mode, the charging connector automatically unlocks from the inlet when charging is completed. For more details, refer to “Charging Connector AUTO/LOCK Mode” in this chapter.

⚠ CAUTION

In order to disconnect the charging connector, unlock the doors to release the charging connector lock system. If not, the charging connector and the vehicle's charging inlet may be damaged.

ODEPQ017031

2. While holding the charging connector, pressing the locking release button(1) and then pull it out.
3. Make sure to securely close the charging door.

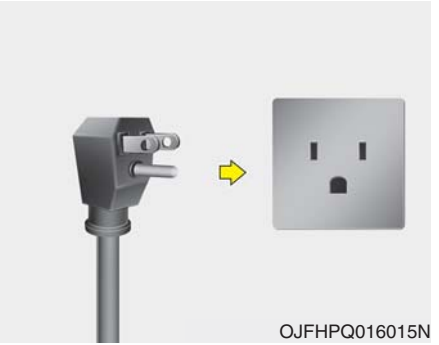
OJFHPQ016015N

4. Disconnect the plug from the household electric outlet. Do not pull the cable when disconnecting the plug.
5. Close the protective cover for the charging connector so that foreign material cannot get into the terminal.
6. Put the charging cable inside the storage bag to protect it.

Precautions for Portable Charging Cable (ICCB: In-Cable Control Box)

- Use a portable charging cable that is certified by Kia.
- Do not try to repair, disassemble, or adjust the portable charging cable.
- Do not use an extension cord or adapter.
- Stop using immediately if failure warning light occurs.
- Do not touch the plug and charging connector with wet hands.
- Do not touch the terminal part of the AC Charging connector and the AC Charging inlet on the vehicle.
- Do not connect the charging connector to voltage that does not comply with regulations.
- Do not use the portable charging cable if it is worn out, exposed, or there exists any type of damage on the portable charging cable.
- If the ICCB case and AC Charging connector is damaged, cracked, or the wires are exposed in any way, do not use the portable charging cable.
- Do not let children operate or touch the portable charging cable.
- Keep the control box free of water.
- Keep the AC Charging connector or plug terminal free of foreign substances.
- Do not step on the cable or cord. Do not pull the cable or cord and do not twist or bend it.
- Do not charge when there is lightning.
- Do not drop the control box, charging connector, or place a heavy object on the control box.
- Do not place an object that can generate high temperatures near the charger when charging.
- Charging with a worn out or damaged household electric outlet can result in a risk of electric shock. If you are unsure about the condition of a household electric outlet, have it checked by a licensed electrician.
- Stop using the portable charging cable immediately if the household electric outlet or any components are overheating or you smell burning.

Action to be taken when charging stops abruptly

When the high voltage battery does not charge, check the followings:

1. Check the charging setting for the vehicle.

   (e.g. When scheduled charging is set, charging is not initiated immediately when the AC charger or portable charger (ICCB: In-Cable Control Box) is connected.)

2. Check the operation status of AC charger, portable charger.

   (Charging Status Indicator Lamp for Portable Charger, refer to “Checking Charging Status” for trickle charge in this chapter.)

❊ Actual method for indicating the charging status may vary in accordance with the charger manufacturer.

3. When the vehicle does not charge and a warning message appears on the cluster, check the corresponding message. Refer to “LCD Display Messages”, in this chapter.
4. If the vehicle is properly charged when charged with another normally working charger, contact the charger manufacturer.
5. If the vehicle does not charge when charged with another normally working charger, we recommend that you contact an authorized Kia dealer.

Changing plug-in hybrid mode (Plug-in hybrid vehicle)

ODEP059110N

■ EV/HEV Button

Whenever you press the [EV/HEV] button, Plug-in hybrid system drive mode will be changed as follows:

Electric (CD) mode - Automatic (AUTO) mode - Hybrid (CS) mode.

Each time the mode is changed a corresponding LED is displayed on the instrument cluster as follows;

Automatic (AUTO) mode

■ Type A

ODEP059301

■ Type B

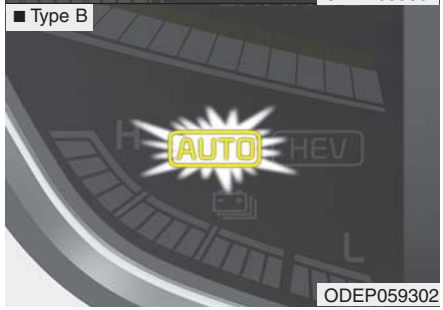

ODEP059302

Hybrid (CS) mode

■ Type A

ODEP059303

■ Type B

ODEP059304

Plug-in hybrid mode message

• CD (Charge Depleting, Electric) mode

ODEP049189L

: The high-voltage (hybrid) battery is used to drive the vehicle.

• AUTO (Automatic) mode

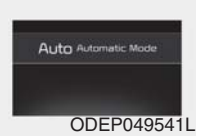

ODEP049541L

: The drive mode will be automatically selected from either Electric (CD) mode or Hybrid (CS) mode by the system according to the driving condition.

• CS (Charge Sustaining, Hybrid) mode

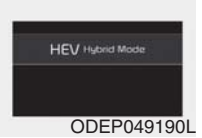

ODEP049190L

: The high-voltage (hybrid) battery and gasoline engine are used to drive the vehicle.

A corresponding message is displayed to indicate the selected mode.

ODEPQ019129C

ODEPQ019128C

■ 'Infotainment System' screen

Press [PHEV] on the [Home screen].

The Plug-in Hybrid menu consists of five sections: [EV range], [Energy information], [Charge management], [ECO driving], [Energy flow].

For more information, please refer to the Multimedia System Manual that was separately supplied with your vehicle.

Warning and indicator lights

Ready Indicator

This indicator illuminates :

When the vehicle is ready to be driven.

- ON : Normal driving is possible.
- OFF : Normal driving is not possible, or a problem has occurred.
- Blinking : Emergency driving.

When the ready indicator goes OFF or blinks, there is a problem with the system. In this case, have your vehicle inspected by an authorized Kia dealer.

Hybrid system warning light

This warning light illuminates:

When there is a malfunction with the hybrid system.

In this case, have your vehicle inspected by an authorized Kia dealer.

When the warning light illuminates while driving, or does not go OFF after starting the vehicle, have the system inspected by an authorized Kia dealer.

EV Mode Indicator

This indicator illuminates when the vehicle is driven by the electric motor.

Charging Cable Connection Indicator (Plug-in hybrid vehicle)

This indicator illuminates in red when the charging cable is connected.

Coasting guide (if equipped)

A chime will sound and the coasting guide indicator will blink four times to inform the driver when to take the foot off from the accelerator by anticipating a decelerating event* based on the analysis of driving routes and road conditions according to the navigation system. It encourages the driver to remove foot from accelerator pedal and allow coasting down the road with EV motor only. This helps prevent unnecessary fuel consumption and increases fuel efficiency.

❊ Examples of a deceleration events is going down an extended hill, slowing down while approaching a toll booth, and approaching reduced speed zones.

• User settings

Press the Engine Start/Stop button and put the shift lever in P(Park). In the User Settings Mode, select Driving Assist, Coasting Guide, and then On to turn on the system. Cancel the selection of coasting guide to turn off the system. For the explanation of the system, press and hold the [OK] button.

• Operation conditions

To activate the system, take the following procedures. Enter your destination information on the navigation and select the driving route. Then, satisfy the following.

- The driving speed should be between 60 km/h (37 mph) and 160 km/h (99 mph).

❊ The operating speed may vary due to difference between instrument cluster and navigation effected by tire inflation level.

✻ NOTICE

Coasting guide is only a supplemental system to assist with fuel-efficient driving. Thus, the operating conditions may be different in accordance with traffic/road conditions (i.e. driving in a traffic jam, driving on a slope, driving on a curve). Thus, take the actual driving conditions into consideration, such as distances from the vehicles ahead/ behind, while referring to the coasting guide system as guidance.

LCD Display Messages

Check Hybrid system

This message is displayed when there is a problem with the hybrid control system.

Refrain from driving when the warning message is displayed.

In this case, have your vehicle inspected by an authorized Kia dealer.

Check Hybrid system. Turn off engine

This message is displayed when there is a problem with the hybrid system. The " " indicator will blink and a warning chime will sound until the problem is solved.

In this case, have your vehicle inspected by an authorized Kia dealer.

Check Hybrid system. Do not start engine.

This message is displayed when the hybrid battery power (SOC) level is low. A warning chime will sound until the problem is solved.

In this case, park the vehicle in a safe location and have your vehicle inspected by an authorized Kia dealer.

Stop vehicle and check power Supply

This message is displayed when a failure occurs in the power supply system.

In this case, park the vehicle in a safe location and have your vehicle inspected by an authorized Kia dealer.

Refill inverter coolant

This message is displayed when the inverter coolant is nearly empty.

You should refill the inverter coolant.

In this case, have your vehicle inspected by an authorized Kia dealer.

Stop vehicle and check brakes

This message is displayed when a failure occurs in the brake system.

In this case, park the vehicle in a safe location and have your vehicle inspected by an authorized Kia dealer.

Check brakes

This message is displayed when the brake performance is low or the regenerative brake does not work properly due to a failure in the brake system.

In this case, it may take longer for the brake pedal to operate and the braking distance may become longer.

Refuel to prevent Hybrid battery Damage

This message is displayed when the fuel tank is nearly empty.

You should refill the fuel tank to prevent hybrid battery damage.

Check Virtual Engine Sound System

This message is displayed when there is a problem with the Virtual Engine Sound System (VESS).

In this case, have the system inspected by an authorized Kia dealer.

Charging stopped. Check the cable connection

This warning message is displayed when charging is stopped because the charging connector is not correctly connected to the charging inlet In this case, separate the charging connector and re-connect it and check whether there is any problem (external damage, foreign substances, etc.) with the charging connector and charging inlet.

Remaining charge time (Plug-in hybrid vehicle)

The message is displayed to notify the remaining time to fully charge the battery.

Charging stopped. Please check the AC charger (Plug-in hybrid vehicle)

This message is displayed when there is a problem with the charger.

Low/High System Temp. Maintaining Hybrid mode (Plug-in hybrid vehicle)

This message is displayed when the temperature of the high-voltage (hybrid) battery is too low or too high.

This warning message is to protect the battery and the hybrid system.

Low/High System Temp. Switching to Hybrid mode (Plug-in hybrid vehicle)

This message is displayed when the temperature of the high-voltage (hybrid) battery is too low or high. This warning message is to protect the battery and the hybrid system.

Switching to Hybrid mode to allow heating (Plug-in hybrid vehicle)

- When the coolant temperature is lower than -14 °C (57 °F), and you turn the climate control On for heating, this message will be displayed in the cluster. Then, the vehicle will automatically switch to HEV mode.
- When the coolant temperature is higher than -14 °C (57 °F), or you turn the climate control Off, the vehicle will automatically return to EV mode.

Wait until fuel door opens (Plug-in hybrid vehicle)

This message is displayed when you attempt to open the fuel filler lid with the fuel tank pressurized. Wait until the fuel tank is depressurized.

✻ NOTICE

- **It may take up to 20 seconds to open fuel filler lid.**
- **When the fuel filler lid is frozen and does not open after 20 seconds at freezing temperature, slightly tap the fuel filler lid and then attempt to open it.**

Fuel door open (Plug-in hybrid vehicle)

This message is displayed when the fuel filler lid is opened.

Also means "Ready to refuel".

Check fuel door (Plug-in hybrid vehicle)

This message is displayed when the fuel filler lid is open or an abnormality has occurred.

Charging Door Open (Plug-in hybrid vehicle)

This message indicates that the charging door is open.

(Driving with the charging door open may result in moisture inflow or damage. This message is used to prevent such occurrences.)

Unplug vehicle to start (Plug-in hybrid vehicle)

This message is displayed when you start the engine without unplugging the charging cable. Unplug the charging cable, and then start the vehicle.

Maintaining Hybrid mode to continue heating (Plug-in hybrid vehicle)

This message is displayed when heat-ng is in operation and the HEV mode is maintained to meet the heating operating conditions when attempting to switch to EV mode by pressing the [EV/HEV] button.

EV / HEV modes (Plug-in hybrid vehicle)

A corresponding message is displayed when a mode is selected by pressing the [EV/HEV] button.

ENERGY FLOW

Kia hybrid system notifies the drivers of energy flow in various operating modes. Eleven Modes show drivers the current operating condition.

EV Propulsion

ODEP047202N

Electric power is used to move the vehicle.

(Battery → Wheel)

Engine Only Propulsion

ODEP047204N

Engine power is used to move the vehicle.

(Engine → Wheel)

Vehicle Stop

ODEP047201N

This mode means the vehicle is at a stop. (There is no energy flow.)

Power Assist

ODEP047203N

Electric and Engine power are used to move the vehicle.

(Battery & Engine → Wheel)

Engine Generation

ODEP047205N

Vehicle is stopped with the Engine charging the hybrid battery.

(Engine → Battery)

Regeneration

ODEP047206N

Hybrid battery is being charged by regenerative braking.

(Wheel → Battery)

Power Reserve

ODEP047207N

Engine is both driving the vehicle and charging the hybrid battery.

(Engine → Wheel & Battery)

Engine Generation/Regeneration

ODEP047207N

The engine and regenerative braking system charge the hybrid battery driving deceleration.

(Engine & Wheel → Battery)

Engine Brake

ODEP047208N

The vehicle is being slowed by engine compression.

(Wheel → Engine)

Engine Generation/Motor Drive

ODEP047209N

The vehicle is being slowed by engine compression and regenerative braking. The hybrid battery is being charged by regenerative braking.

(Engine → Battery → Wheel)

Engine Brake/Regeneration

ODEP047210N

The engine compression can be used to slow the vehicle. The regenerative braking system can be used to charge the hybrid system.

(Wheel → Engine & Battery)

AUX. BATTERY SAVER+ (For Plug-in Hybrid, if equipped)

The Aux. Battery Saver+ is a function that monitors the charging status of the 12V auxiliary battery.

If the auxiliary battery level is low, the main high voltage battery charges the auxiliary battery.

✻ NOTICE

The Aux. Battery Saver+ function will be ON when the vehicle is delivered. If the function is not needed, you may turn it off in the Users Settings mode on the LCD display. For more information, refer to the "System setting" on the following page.

Mode

• Cycle Mode :

When the vehicle is OFF with all doors, hood and liftgate closed, the Aux. Battery Saver+ periodically activates according to the auxiliary battery status.

• Automatic Mode :

When the engine start/stop button is in the ON position with the charging connector plugged in, this function activates according to the auxiliary battery status to prevent over-discharge of the auxiliary battery.

✻ NOTICE

The Aux. Battery Saver+ activates for a maximum of 20 minutes. If the Aux. Battery Saver+ function activates more than 10 times consecutively, in the Automatic Mode, this function will stop activating, judging that there is a problem with the auxiliary battery. In this case, drive the vehicle for some period of time. The function will start activating if the auxiliary battery returns to normal.

⚠ CAUTION

The Aux. Battery Saver+ function cannot prevent battery discharge if the auxiliary battery is damaged, worn out, used as a power supply or if unauthorized electronic devices are used.

✻ NOTICE

If the Aux. Battery Saver+ function was activated, the high voltage battery level may have decreased.

System setting

The driver can activate the Aux. Battery Saver+ function by placing the engine start/stop button to the ON position and by selecting:

"User Settings → Other Features → Aux. Battery Saver+"

⚠ WARNING

The Aux. Battery Saver+ relies on the high voltage battery to charge the 12V battery. The charging indicator lamp will blink rapidly when this is occurring. To reduce the risk of electrical shock, do not touch any high voltage components (orange-colored) or other electrical devices while charging is occurring.

Starting the Hybrid System

1. Carry the smart key into the vehicle.
2. Make sure the parking brake is firmly applied.
3. Place the shift lever in the P(Park) position.

   In N (neutral) position, you cannot start the vehicle.
4. Depress the brake pedal.
5. Press the engine start/stop button.
6. The engine should be started without pressing the accelerator. In extremely cold weather or after the vehicle has not been operated for several days, let the engine warm up without depressing the accelerator.
   - Even if the smart key is in the vehicle, if it is far away from you, the engine may not start.
   - When the engine start/stop button is in the ACC or ON position and if any door is open, the system checks for the smart key. If the smart key is not in the vehicle, the warning, "Key is not in vehicle" will come on, and if all doors are closed, the chime will also sound for about 5 seconds. The indicator will turn off while the vehicle is moving. Keep the smart key in the vehicle when using the ACC position or if the vehicle engine is on.

If the starting procedure is followed, the "" symbol on the instrument cluster will turn on. For more details, Please check chapter 4.

ECONOMICAL and SAFE OPERATION of Hybrid system

- Drive smoothly. Accelerate at a moderate rate and maintain a steady cruising speed. Don't make "jack-rabbit" starts. Don't race between stoplights.

  Avoid heavy traffic whenever possible. Always maintain a safe distance from other vehicles so you can avoid unnecessary braking. This also reduces brake wear.
- The regenerative brake generates energy when the vehicle decelerates.
- When the hybrid battery power is low, the hybrid system automatically recharges the hybrid battery.
- When the engine runs in "N" position, the hybrid system cannot generate electricity. The hybrid battery cannot recharge in "N" position. Please refer to chapter 6.

✻ NOTICE

When the hybrid system is in ready mode, the engine will automatically start and stop as needed.
The " " symbol will illuminate in the cluster when the system is operational.

⚠ CAUTION - Extended cranking

Do not crank the engine for a prolonged period of time without the engine starting. This could result in damage to the HEV battery and result in total discharge.

COMPONENTS OF THE HYBRID/PLUG-IN HYBRID VEHICLE

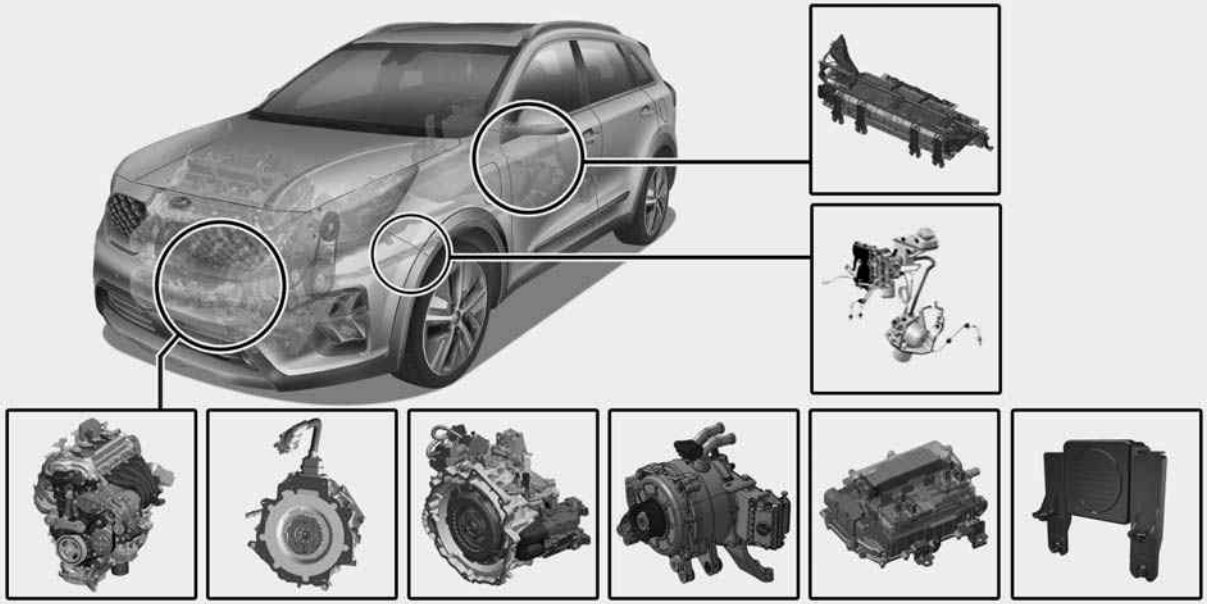

1. Engine : 1.6L
2. Motor : 32kW (HEV)/ 44.5kW (PHEV)
3. Transmission : 6DCT
4. Hybrid starter generator (HSG)
5. HPCU (Hybrid Power Control Unit)
6. High voltage battery system
7. Generative brake system
8. Virtual Engine Sound System (VESS)

❊ The actual shape may differ from the illustration.

ODEPQ019001L

The Hybrid battery uses high voltage to operate the electric motor and other components. High voltage is dangerous if touched.

Your vehicle is equipped with orange colored insulation which covers over the high voltage components to protect people from electric shock. High voltage warning labels are attached to some system components as additional warnings. Have your vehicle serviced by an authorized Kia dealer.

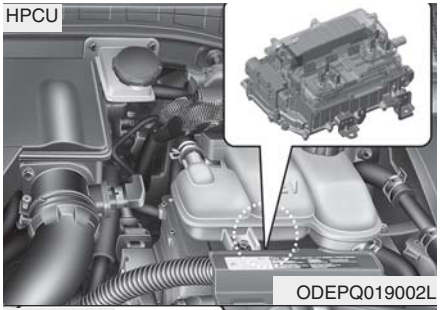

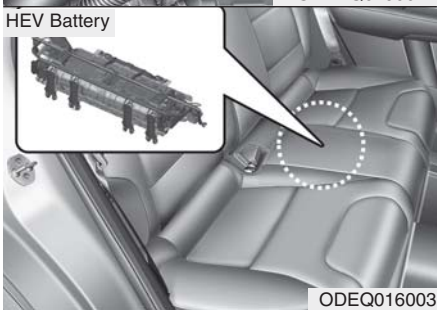

⚠ WARNING - High voltage components

Never touch orange-colored or high voltage labeled components including wires, cables, and connectors. If the insulators or covers are damaged or removed, severe injury or death from electrocution may occur.

⚠ WARNING - Avoid Touching Hybrid Power Control Unit

When replacing the fuses in the engine compartment, never touch the HPCU. The HPCU carries high voltage. Touching the HPCU could result in electrocution, serious injury, or death.

⚠ CAUTION - High Voltage Battery Damage

When loading your vehicle, be careful of transporting items in a manner that could damage the high voltage battery. Do not store items on top of the high voltage battery or overload the trunk area. Such actions may ultimately damage the high voltage battery unit.

⚠ CAUTION - Carrying Liquids in Trunk

Do not load large amounts of liquid in open containers in the vehicle. If spilled onto the HEV battery, the liquid may cause a short or further damage to the battery.

Motor

ODEQ016004

⚠ WARNING - Battery electrolyte

As with all batteries, avoid fluid contact with the Hybrid battery. If the battery is damaged and if electrolyte comes in contact with your body, clothes or eyes, immediately flush with a large quantity of fresh water and seek medical attention.

⚠ WARNING - After market battery charger

Do not use an after-market battery charger to charge the Hybrid battery. Doing so may result in death or serious injury.

⚠ WARNING - High Waters

- **Avoid high waters as this may result in your vehicle becoming saturated with water and could compromise the high voltage components.**
- **Do not touch any of the high voltage components within your vehicle if your vehicle has been submerged in water equal to half of the vehicle height. Touching high voltage components once submerged in water could result in severe burns or electric shock that could result in death or serious injury.**

⚠ CAUTION - Cleaning Engine

When you clean the engine compartment, do not wash using water. Water may cause electric arcing to occur and damage electronic parts and components.

⚠ WARNING - Exposure to High Voltage

- **High voltage in the hybrid battery system is very dangerous and can cause severe burns and electric shock. This may result in serious injury or death.**
- **For your safety, never touch, replace, dismantle or remove any portion of the hybrid battery system including components, cables and connectors.**

⚠ WARNING - Use of Water or Liquids

If water or liquids come into contact with the hybrid system components, and you are also in contact with the water, severe injury or death due to electrocution may occur.

⚠ WARNING - Hot Components

When the hybrid battery system operates, the HEV battery system can be hot. Heat burns may result from touching even insulated components of the HEV system.

✻ NOTICE - Prolonged parking

Prolonged parking might cause battery discharge and operation failure due to natural discharge. Driving the vehicle approximately once every 2 months, more than 15 km (9 miles) is recommended. The battery will be charged automatically when driving the vehicle.

Safety plug

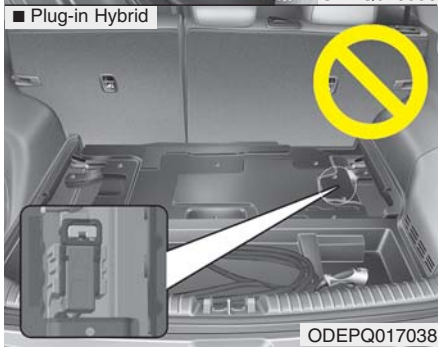

⚠ WARNING - Safety Plug

Never touch the safety plug. The safety plug is attached to the high voltage hybrid battery system. Touching the safety plug may result in death. Service personnel should follow the appropriate procedures in the service manual.

Some Special Features of the Hybrid Vehicle.

Hybrid vehicles sound different than gasoline engine vehicles. When the hybrid system operates, you may hear a sound from the hybrid battery system behind the rear seat. If you apply the accelerator pedal rapidly, you may hear a sound. When you apply the brake pedal, you may hear a sound from the regenerative brake system. When the hybrid system is turned off or on, you may hear a sound in the engine compartment. If you depress the brake pedal repeatedly when the hybrid system is turned on, you may hear a sound in the engine compartment. None of these sounds indicate a problem.

They are characteristics of hybrid vehicles.

When the hybrid system is turned on, the engine may run. This does not indicate a malfunction. If the "🚗" symbol is on, the hybrid system is operating. Even if the gasoline engine is off, you can operate the vehicle.

The HEV system may emit electromagnetic waves which can affect the performance of electronic devices appliances, such as laptop computers, which are not part of the vehicle design.

If you park the vehicle for a long time, the hybrid system will discharge. You need to drive the vehicle approximately once every 2 months, more than 15 km (9 miles) is recommended.

When you start the hybrid system in the "P" transmission position, the "🚗" symbol is illuminated in the cluster. The driver can drive the vehicle even if the engine is stopped.

⚠ WARNING - Turning off HEV system

When you leave the vehicle, you should turn off the hybrid system. If you depress the accelerator pedal by mistake and the vehicle is not in the "P" position, the vehicle will accelerate. This may result in serious injury or death.

Virtual Engine Sound System (VESS)

The Virtual Engine Sound System generates engine sound for pedestrians to hear vehicle sound because there is limited sound while electric motor power is used.

- With the ignition switch or ENGINE START/STOP button in the ON position, if you change the shift lever from P(Parking) to any other position, the VESS will operate.
- When the gear is shifted to R (Reverse), an additional warning sound will be heard.

High Voltage Battery Air Intake

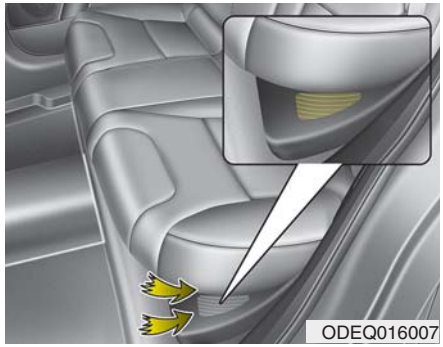

The hybrid battery air intake is located on bottom and side of the rear seats. The air intake cools down the hybrid battery. When the hybrid battery air intake is blocked, the hybrid battery may be overheated. Do not obstruct the air intake with any other objects.

⚠ WARNING - Air Intake

- **Blocking the air intake behind the rear seats may damage the HEV battery.**
- **Do not allow any water into the air intake even when cleaning. If any water enters the air intake, the Hybrid battery may cause an electric shock which can cause serious injury or death due to electrocution.**

⚠ WARNING
- Interference with electronic medical devices

Electromagnetic waves that are generated from the charger can impact medical electric devices such as an implantable cardiac pacemaker. When using such medical electric devices, ask your medical professional and the device manufacturer whether charging your electric vehicle will impact the operation of the medical electric devices.

If An Accident Occurs

- Avoid the engine compartment.
- Avoid making contact with any orange or high voltage wires, cables, or components.
- Assume that a high voltage component is exposed and move away from the vehicle as promptly as possible.
- Refer to Chapter 7 for towing information.

- After parking the vehicle, shift the transmission into "P" position. Turn off the hybrid system by pushing the Engine Start/Stop button.
- For your safety, do not touch high voltage cables, connectors and package modules. High Voltage components are orange in color.
- Exposed cables or wires may be visible inside or outside of the vehicle. Never touch the wires or cables, because an electrical shock may occur causing injury or death.

⚠ WARNING

- **If a small scale fire occurs, use a fire extinguisher (ABC, BC) that is meant for electrical fires.**

  If it is impossible to extinguish the fire in the early stage, remain a safe distance from the vehicle and immediately call your local fire emergency responders. Also, advise them that a hybrid vehicle is involved.

  If the fire spreads to the high voltage battery, large amount of water is needed to put out the fire.

  Using small amount of water or fire extinguishers not meant for electrical fires could cause serious injury or death from electrical shocks.
- **If you need towing, refer to chapter 6.**

If a vehicle accident occurs:

1. Stop the vehicle and shift the transmission into "P" position and then depress the parking brake.
2. Turn off the Hybrid system by pushing the Engine Start/Stop Button.
3. Step away from the vehicle and go to a safe place.
4. Call emergency services for help and let them know the vehicle is a Hybrid vehicle.

   Do not touch high voltage cables, connectors and package modules. High voltage components are orange in color.

Exposed cables or wires may be visible inside or outside of the vehicle. Never touch the wires or cables, because an electrical shock may occur causing injury or death.

⚠ WARNING

If submersion in water occurs:

If your vehicle was flooded and has soaked carpeting or water on the flooring, you should not try to start the Hybrid system. Never touch the high voltage cables, connectors or package modules, because an electrical shock may occur causing injury or death. High Voltage cables are orange in color.

If this occurs. have the vehicle towed to and inspected by an authorized Kia dealer.

When the hybrid vehicle shuts off

When the high voltage battery or 12-volt battery discharges, or fuel tank is empty, the hybrid system may not operate.

If the Hybrid system stops operating while the vehicle is moving, reduce the vehicle speed gradually, pull your vehicle off the road to a safe area, and shift the transmission in to Park (P) position and;

1. Turn on the hazard warning flashers.
2. Set the start button at OFF, and try to start the Hybrid system by applying the brake pedal and pushing the start button.
3. If the Hybrid system will not operate, refer to "EMERGENCY STARTING" in chapter 6.

Before you try to jump start the vehicle, confirm the fuel level. If the fuel level is low add more fuel before attempting as emergency start.

⚠ WARNING - Vehicle Accident

Never touch electric wires or cable. If exposed electric wires or cables are visible inside or outside of your vehicle, an electric shock may occur.

⚠ WARNING - Putting out fire

Never use a small quantity of water to put out a fire in your vehicle. If a fire occurs, evacuate the car immediately and contact the fire department.

Introduction

1

Fuel requirements 1-2
• Gasoline containing alcohol and methanol. 1-2
• Do not use methanol 1-3
• Fuel additives. 1-4
• Operation in foreign countries. 1-4
Vehicle modifications 1-5
Vehicle break-in process 1-5
HEV/PHEV powertrain. 1-5
Vehicle data collection and event data recorders. . 1-6

FUEL REQUIREMENTS

Your new vehicle is designed to use only unleaded fuel having a pump octane number ((R+M)/2) of 87 (Research Octane Number 91) or higher. (Do not use methanol blended fuels.)

Your new vehicle is designed to obtain maximum performance with UNLEADED FUEL, as well as minimize exhaust emissions and spark plug fouling.

Never add any fuel system cleaning agents to the fuel tank other than what has been specified. (Consult an authorized Kia dealer for details.)

- Tighten the cap until it clicks one time, otherwise the Check Engine light will illuminate.

⚠ WARNING - Refueling

- **Do not "top off" after the nozzle automatically shuts off. Attempts to force more fuel into the tank can cause fuel overflow onto you and the ground, causing a risk of fire.**
- **Always check that the fuel cap is installed securely to prevent fuel spillage, especially in the event of an accident.**

Gasoline containing alcohol and methanol

Gasohol, a mixture of gasoline and ethanol (also known as grain alcohol), and gasoline or gasohol containing methanol (also known as wood alcohol) are being marketed along with or instead of leaded or unleaded gasoline.

Pursuant to EPA regulations, ethanol may be used in your vehicle.

Do not use gasohol containing more than 15% ethanol, and do not use gasoline or gasohol containing any methanol. Ethanol provides less energy than gasoline and it attracts water, and it is thus likely to reduce your fuel efficiency and could lower your MPG results.

Methanol may cause drivability problems and damage to the fuel system, engine control system and emission control system.

Discontinue using gasohol of any kind if drivability problems occur.

Vehicle damage or drivability problems may not be covered by the manufacturer's warranty if they result from the use of:

1. Gasoline or gasohol containing methanol.
2. Leaded fuel or leaded gasohol.
3. Gasohol containing more than 15% ethanol.

"E85" fuel is an alternative fuel comprised of 85 percent ethanol and 15 percent gasoline, and is manufactured exclusively for use in Flexible Fuel Vehicles. “E85” is not compatible with your vehicle. Use of “E85” may result in poor engine performance and damage to your vehicle's engine and fuel system. Kia recommends that customers do not use fuel with an ethanol content exceeding 15 percent.

✻ NOTICE

Your New Vehicle Limited Warranty does not cover damage to the fuel system or any performance problems caused by the use of “E85” fuel.

✻ NOTICE

Never use any fuel containing methanol. Discontinue use of any methanol containing product which may inhibit proper drivability.

Other fuels

Using fuels that contain Silicone (Si), MMT (Manganese, Mn), Ferrocene (Fe), and Other metalic additives, may cause vehicle and engine damage or cause misfiring, poor acceleration, engine stalling, catalyst melting, clogging, abnormal corrosion, life cycle reduction, etc.

Also, the Malfunction Indicator Lamp (MIL) may illuminate.

✻ NOTICE

Damage to the fuel system or performance problem caused by the use of these fuels may not be covered by your New Vehicle Limited Warranty.

Gasoline containing MMT

Some gasoline contains harmful manganese-based fuel additives Such as MMT(Methylcyclopentadienyl Manganese Tricarbonyl). Kia does not recommend the use of gasoline containing MMT. This type of fuel can reduce vehicle performance and affect your emission control system. The Malfunction Indicator Lamp on the cluster may come on.

Do not use methanol

Fuels containing methanol (wood alcohol) should not be used in your vehicle. This type of fuel can reduce vehicle performance and damage components of the fuel system, engine control system and emission control system.

Fuel Additives

Kia recommends that you use good quality gasolines treated with detergent additives such as TOP TIER Detergent Gasoline, which help prevent deposit formation in the engine. These gasolines will help the engine run cleaner and enhance performance of the Emission Control System. For more information on TOP TIER Detergent Gasoline, please go to the website (www.toptiergas.com)

For customers who do not use TOP TIER Detergent Gasoline regularly, and have problems starting or the engine does not run smoothly, additives that can be purchased separately may be added to the gasoline.

If TOP TIER Detergent Gasoline is not available, one bottle of additive should be added to the fuel tank at every 7,500 miles (12,000 km) or every engine oil change is recommended. Additives are available from your authorized Kia dealer along with information on how to use them. Do not mix other additives.

Operation in foreign countries

If you are going to drive your vehicle in another country, be sure to:

- Observe all regulations regarding registration and insurance.
- Determine that acceptable fuel is available.

VEHICLE MODIFICATIONS

This vehicle should not be modified. Modification of your vehicle could affect its performance, safety or durability and may even violate governmental safety and emissions regulations.

In addition, damage or performance problems resulting from any modification may not be covered under warranty.

- If you use unauthorized electronic devices, it may cause the vehicle to operate abnormally, wire damage, battery discharge and fire. For your safety, do not use unauthorized electronic devices.

VEHICLE BREAK-IN PROCESS

No special break-in period is needed. By following a few simple precautions for the first 600 miles (1,000 km) you may add to the performance, economy and life of your vehicle.

- Do not race the engine.
- While driving, keep your engine speed (rpm, or revolutions per minute) between 2,000 rpm and 4,000 rpm.
- Do not maintain a single speed for long periods of time, either fast or slow. Varying engine speed is needed to properly break-in the engine.
- Avoid hard stops, except in emergencies, to allow the brakes to seat properly.
- Don't tow a trailer during the first 1,200 miles (2,000 km) of operation.

HEV/PHEV POWERTRAIN

By following a few simple precautions for the first 600 miles (1,000 km) you may add to the performance, economy and life of your vehicle.

- Do not race the engine.
- Avoid hard stops, except in emergencies, to allow the brakes to seat properly.

VEHICLE DATA COLLECTION AND EVENT DATA RECORDERS

This vehicle is equipped with an event data recorder (EDR). The main purpose of an EDR is to record, in certain crash or near crash-like situations, such as an air bag deployment or hitting a road obstacle, data that will assist in understanding how a vehicle's systems performed. The EDR is designed to record data related to vehicle dynamics and safety systems for a short period of time, typically 30 seconds or less. The EDR in this vehicle is designed to record such data as:

- **How various systems in your vehicle were operating;**
- **Whether or not the driver and passenger safety belts were buckled/fastened;**
- **How far (if at all) the driver was depressing the accelerator and/or brake pedal; and,**
- **How fast the vehicle was traveling.**

These data can help provide a better understanding of the circumstances in which crashes and injuries occur. NOTE: EDR data are recorded by your vehicle only if a non-trivial crash situation occurs; no data are recorded by the EDR under normal driving conditions and no personal data (e.g., name, gender, age, and crash location) are recorded. However, other parties, such as law enforcement, could combine the EDR data with the type of personally identifying data routinely acquired during a crash investigation.

To read data recorded by an EDR, special equipment is required, and access to the vehicle or the EDR is needed. In addition to the vehicle manufacturer, other parties, such as law enforcement, that have the special equipment, can read the information if they have access to the vehicle or the EDR.

Your vehicle at a glance

Exterior overview 2-2
Interior overview 2-4
Instrument panel overview 2-5
Engine compartment 2-6

EXTERIOR OVERVIEW

■ Front view

1. Hood 4-34
2. Head lamp (Features of your vehicle) ...4-130
   Head lamp (Maintenance) 7-87
3. Daytime running lamp (Features of your vehicle) 4-129
   Daytime running lamp (Maintenance) ...7-88
4. Fog lamp (Features of your vehicle) ...4-135
   Fog lamp (Maintenance) 7-88
5. Wheel and tire (Maintenance) 7-42
   Wheel and tire (Specifications) 8-5
6. Outside rearview mirror 4-62
7. Sunroof 4-42
8. Front windshield wiper blades (Features of your vehicle).....4-136
   Front windshield wiper blades (Maintenance) 7-37
9. Windows 4-29
10. Roof rack 4-180
11. Charging door (plug-in) .....Hybrid system overview
12. Front radar 5-53
13. Front ultrasonic sensors 4-124

❊ The actual shape may differ from the illustration.

ODEP019001C

■ Rear view

1. Door locks 4-21
2. Fuel filler door 4-36, 4-37
3. Rear combination lamp (Maintenance) 7-88
4. High mounted stop lamp (Maintenance) 7-89
5. Liftgate.....4-26
6. Antenna 4-182
7. Rear wiper and Rear view camera (Features of your vehicle).....4-136, 4-120
   Rear window wiper blade (Maintenance)...7-38
8. Rear ultrasonic sensors 4-121

❊ The actual shape may differ from the illustration.

ODEP019002

INTERIOR OVERVIEW

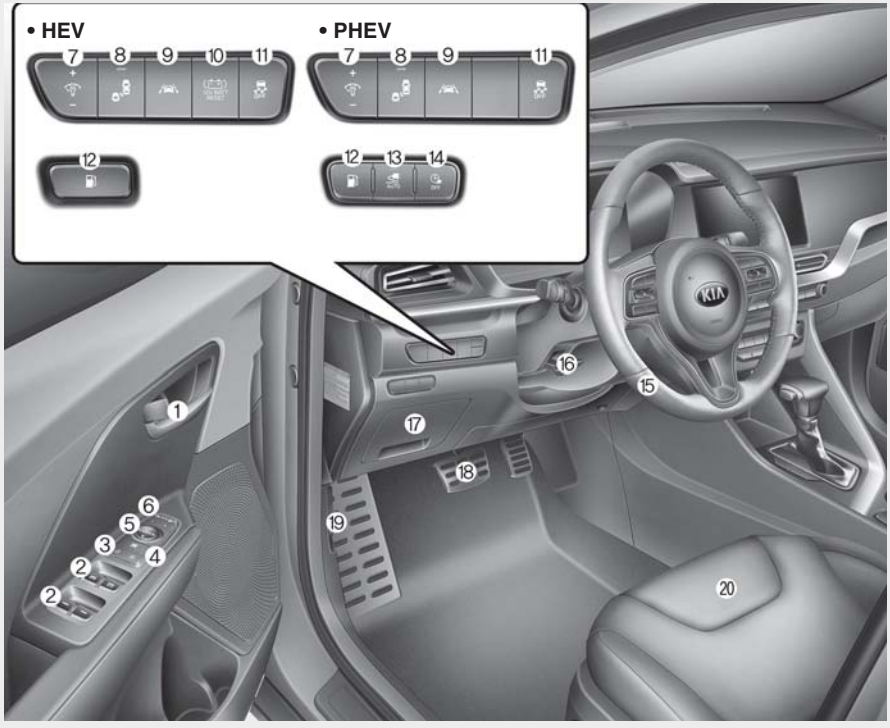

1. Inside door handle.....4-22
2. Power window switch 4-29
3. Central door lock switch 4-23
4. Power window lock button.....4-32
5. Outside rearview mirror control.....4-62
6. Outside rearview mirror folding 4-64
7. Instrument panel illumination control 4-68
8. Blind-Spot Collision Warning system On/Off button 5-80
9. Lane Keeping Assist system On/Off button 5-72
10. 12V Battery Reset switch (For Hybrid)..6-5
11. ESC off button.....5-46
12. Fuel filler door open button.....4-36, 4-37
13. Auto Lock mode button (For Plug-in Hybrid) .....Hybrid system overview
14. Scheduled charging deactivation button (For Plug-in Hybrid)..Hybrid system overview
15. Steering wheel 4-47
16. Tilt and telescopic steering control lever.....4-48
17. Inner fuse panel 7-59
18. Brake pedal 5-30
19. Hood release lever 4-34
20. Seat.....3-4

❊ The actual shape may differ from the illustration.

ODEP019003N

INSTRUMENT PANEL OVERVIEW

❊ The actual shape may differ from the illustration.

1. Steering wheel audio controls .....Refer to "Car Infotainment System Quick Reference Guide".
2. Driver`s front air bag 3-62
3. Horn.....4-50
4. Instrument cluster.....4-66
5. Wiper and washer control lever (Right).....4-136
6. Lighting control lever (Left).....4-130
7. Ignition switch.....5-7
   ENGINE START/STOP button.....5-11
8. Cruise control 5-98
   Smart Cruise Control system button..5-103
9. Infotainment system.....Refer to "Car Infotainment System Quick Reference Guide".
10. Hazard warning flasher 6-2
11. Climate control system.....4-145
12. Shift lever DCT 5-16
13. Front seat warmer 4-167
    Front air ventilation seat 4-169
14. Heated steering wheel button 4-49
15. Changing plug-in hybrid mode button..intro
16. Reverse Parking Distance Warning system OFF button.....4-121
    Forward/Reverse Parking Distance Warning system ON/OFF button.....4-124
17. Smart phone wireless charger 4-173
18. Center console storage box 4-164
19. Power outlet.....4-170
20. USB charger.....4-171
21. Glove box 4-164
22. Passenger`s front air bag.....3-62
23. USB port.....4-182
24. AC inverter 4-172

ODEP019004C

ENGINE COMPARTMENT

■ **Gasoline engine (Kappa 1.6L GDI)**

1. Engine coolant reservoir 7-22
2. Engine oil filler cap 7-19
3. Engine oil dipstick 7-19
4. Brake fluid reservoir 7-26
5. Inverter coolant reservoir 7-22
6. Fuse box 7-61
7. Engine clutch actuator reservoir tank.7-28
8. Air cleaner.....7-32
9. Windshield washer fluid reservoir 7-30

❊ The actual engine room in the vehicle may differ from the illustration.

ODEP079115

Safety features of your vehicle

Important safety precautions 3-2
- Always wear your seat belt. 3-2
- Restrain all children 3-2
- Air bag hazards 3-2
- Driver distraction 3-2
- Control your speed 3-3
- Keep your vehicle in safe condition 3-3

Seat. 3-4
- Front seat adjustment - manual. 3-7
- Front seat adjustment - power (for driver's seat) . . . 3-8
- Driver position memory system (for power seat). . . 3-10
- Headrest (for front seat) 3-12
- Seatback pocket 3-15
- Rear seat adjustment 3-15

Seat belts 3-21
- Seat belt restraint system 3-21
- Pre-tensioner seat belt. 3-29
- Seat belt precautions 3-31
- Care of seat belts 3-33

Child Restraint System (CRS) 3-35
- Children always in the rear 3-35
- Selecting a Child Restraint System (CRS) 3-36
- Installing a Child Restraint System (CRS). 3-39

Air bag - advanced supplemental restraint system 3-47
- How does the air bag system operate? 3-48
- Air bag warning light 3-50
- SRS components and functions 3-51
- Occupant Detection System (ODS) 3-54
- Driver's and passenger's front air bag 3-62
- Side air bag 3-65
- Curtain air bag 3-67
- SRS Care 3-72
- Adding equipment to or modifying your air bag-equipped vehicle. 3-73
- Air bag warning label 3-73

IMPORTANT SAFETY PRECAUTIONS

You will find many safety precautions and recommendations throughout this section, and throughout this manual. The safety precautions in this section are among the most important.

Always wear your seat belt

A seat belt is your best protection in all types of accidents. Air bags are designed to supplement seat belts, not replace them. So even though your vehicle is equipped with air bags, ALWAYS make sure you and your passengers wear your seat belts, and wear them properly.

Restrain all children

All children under age 13 should ride in your vehicle properly restrained in a rear seat, not the front seat. Infants and small children should be restrained in an appropriate child restraint. Larger children should use a booster seat with the lap/shoulder belt until they can use the seat belt properly without a booster seat.

Air bag hazards

While air bags can save lives, they can also cause serious or fatal injuries to occupants who sit too close to them, or who are not properly restrained. Infants, young children, and shorter adults are at the greatest risk of being injured by an inflating air bag. Follow all instructions and warnings in this manual.

Driver distraction

Driver distraction presents a serious and potentially deadly danger, especially for inexperienced drivers. Safety should be the first concern when behind the wheel and drivers need to be aware of the wide array of potential distractions, such as drowsiness, reaching for objects, eating, personal grooming, other passengers, and using cellular phones.

Drivers can become distracted when they take their eyes and attention off the road or their hands off the wheel to focus on activities other than driving. To reduce your risk of distraction or getting into an accident:

- ALWAYS set up your mobile devices (i.e., MP3 players, phones, navigation units, etc.) when your vehicle is parked or safely stopped.

- ONLY use your mobile device when allowed by laws and when conditions permit safe use. NEVER text or email while driving. Most countries have laws prohibiting drivers from texting. Some countries and cities also prohibit drivers from using handheld phones.
- NEVER let the use of a mobile device distract you from driving. You have a responsibility to your passengers and others on the road to always drive safely, with your hands on the wheel as well as your eyes and attention on the road.

Control your speed

Excessive speed is a major factor in crash injuries and deaths. Generally, the higher the speed, the greater the risk, but serious injuries can also occur at lower speeds. Never drive faster than is safe for current conditions, regardless of the maximum speed posted.

Keep your vehicle in safe condition

Having a tire blowout or a mechanical failure can be extremely hazardous. To reduce the possibility of such problems, check your tire pressures and condition frequently, and perform all regularly scheduled maintenance.

SEAT

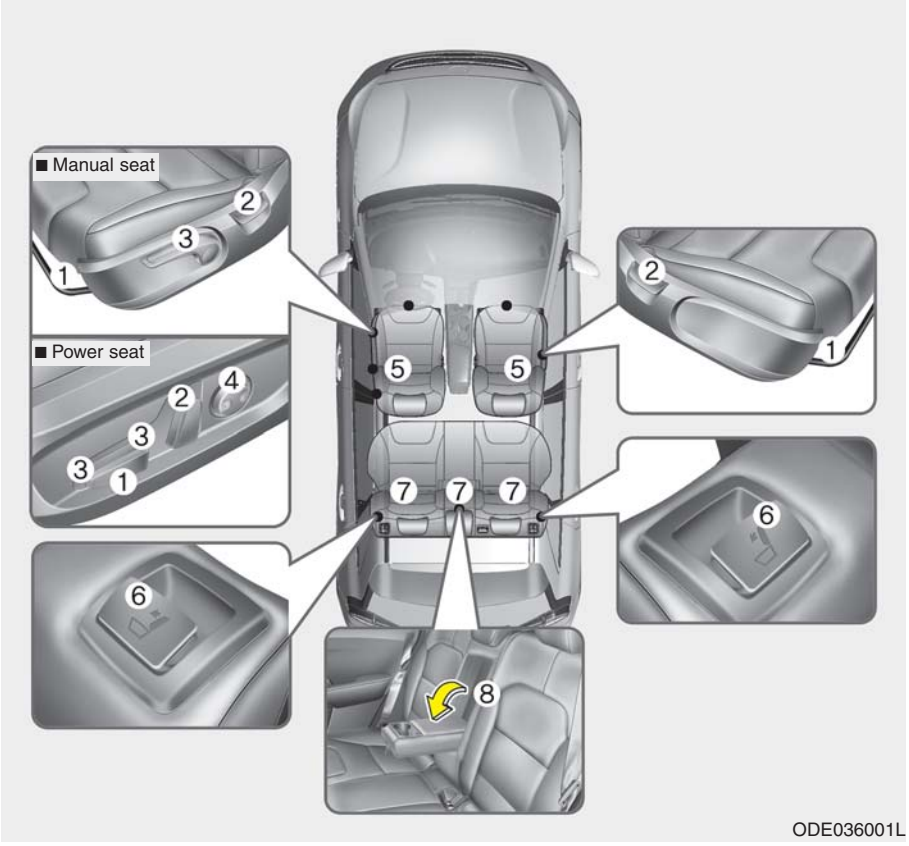

Front seat

(1) Forward and backward
(2) Seatback angle
(3) Seat cushion height (Driver`s seat)
(4) Lumbar support (Driver's seat)*
(5) Head rest

Rear seat

(6) Seatback folding
(7) Headrest

* : if equipped

⚠ WARNING - Loose objects

Do not place anything in the driver's foot well or under the front seats. Loose objects in the driver's foot area could interfere with the operation of the foot pedals.

⚠ WARNING - Uprighting seat

Do not press the release lever on a manual seatback without holding and controlling the seatback. The seatback will spring upright, possibly impacting you or other passengers.

⚠ WARNING - Driver responsibility for passengers

The driver must advise the passengers to keep the seatback in an upright position whenever the vehicle is in motion. If a seat is reclined during an accident, the restraint system's ability to restrain will be greatly reduced.

⚠ WARNING - Seat cushion

Occupants should never sit on aftermarket seat cushions or sitting cushions. The passenger's hips may slide under the lap portion of the seat belt during an accident or a sudden stop.

⚠ WARNING - Driver's seat

- **Never attempt to adjust the seat while the vehicle is moving. This could result in loss of control of your vehicle.**
- **Do not allow anything to interfere with the normal position of the seatback. Storing items against the seatback could result in serious or fatal injury in a sudden stop or collision.**
- **Sit as far back as possible from the steering wheel while still maintaining comfortable control of the your vehicle. A distance of at least 25 cm (10 in.) from your chest to the steering wheel is recommended. Failure to do so can result in air bag inflation injuries to the driver.**

⚠ WARNING - Rear seatbacks

Always lock the rear seatback before driving. Failure to do so could result in passengers or objects being thrown forward, injuring vehicle occupants.

⚠ WARNING - Unexpected Seat Movement

After adjusting a manual seat, always check that it is locked by shifting your weight to the front and back. Sudden or unexpected movement of the driver's seat could cause you to lose control of the vehicle.

⚠ WARNING - Seat adjustment

- **Do not adjust the seat while wearing seat belts. Moving the seat forward will cause strong pressure on the abdomen.**
- **Do not place your hand near the seat bottom or seat track while adjusting the seat. Your hand could get caught in the seat mechanism.**

⚠ WARNING - Small Objects

Use extreme caution when picking up small objects trapped under the seats or between the seat and the center console. Your hands might be cut or injured by the sharp edges of the seats mechanism.

Feature of Seat Leather

- Leather is made from the outer skin of an animal, which goes through a special process to be available for use. Since it is a natural substance, each part differs in thickness or density.

  Wrinkles may appear as a natural result of stretching and shrinking depending on the temperature and humidity.
- The seat cover is made of stretchable material to improve comfort of passengers.
- The parts contacting the body are curved and the side supporting area is high which provides driving comfort and stability.
- Wrinkles may appear naturally from usage. It is not a fault of the product.

⚠ **CAUTION**

- ***Belts with metallic accessories, zippers or keys inside the back pocket may damage the seat fabric.***
- ***Make sure not to wet the seat. It may change the nature of natural leather.***
- ***Jeans or clothes which could bleach may contaminate the surface of the seat covering fabric.***

✻ **NOTICE**

Wrinkles or abrasions which appear naturally from usage are not covered by warranty.

Front seat adjustment - manual

Forward and backward

ODEP039062

To move the seat forward or backward:

1. Pull the seat slide adjustment lever up and hold it.
2. Slide the seat to the position you desire.
3. Release the lever and make sure the seat is locked in place.

Adjust the seat before driving, and make sure the seat is locked securely by trying to move forward and backward without using the lever. If the seat moves, it is not locked properly.

Seatback angle

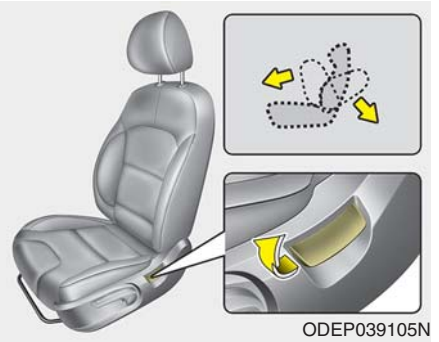
ODEP039105N

To recline the seatback:

1. Lean forward slightly and lift up the seatback recline lever.
2. Carefully lean back on the seat and adjust the seatback of the seat to the position you desire.
3. Release the lever and make sure the seatback is locked in place. (The lever MUST return to its original position for the seatback to lock.)

Reclining seatback

Sitting in a reclined position when the vehicle is in motion can be dangerous. Even when buckled up, the protections of your restraint system (seat belts and/or air bags) is greatly reduced by reclining your seatback.

Seat belts must be snug against your hips and chest to work properly. When the seatback is reclined, the shoulder belt cannot do its job because it will not be snug against your chest. Instead, it will be in front of you. During an accident, you could be thrown into the seat belt, causing neck or other injuries.

The more the seatback is reclined, the greater chance the passenger's hips will slide under the lap belt or the passenger's neck will strike the shoulder belt.

Seat height

To change the height of the seat, push the lever upwards or downwards.

- To lower the seat cushion, push the lever down several times.
- To raise the seat cushion, pull the lever up several times.

Front seat adjustment - power (for driver's seat, if equipped)

The driver's seat can be adjusted by using the control switches located on the outside of the seat cushion. Before driving, adjust the seat to the proper position so you can easily control the steering wheel, pedals and switches on the instrument panel.

⚠ WARNING - Unattended children

Do not leave children unattended in the vehicle. Children might operate features of the vehicle that could injure them.

Forward and backward

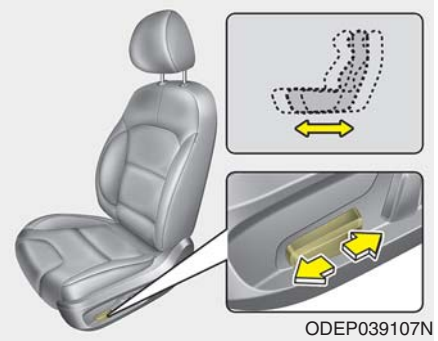

Push the control switch forward or backward to move the seat to the desired position. Release the switch once the seat reaches the desired position.

Seatback angle

Push the control switch forward or backward to move the seatback to the desired angle. Release the switch once the seat reaches the desired position.

Seat height

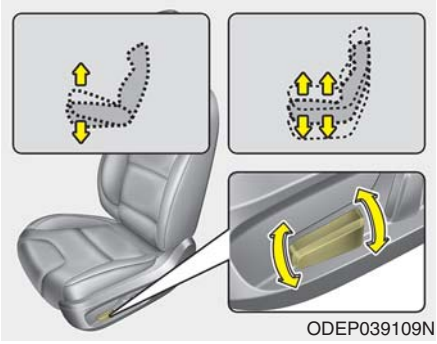
ODEP039109N

Pull the front portion of the control switch up to raise or press down to lower the front part of the seat cushion. Pull the rear portion of the control switch up to raise or press down to lower the seat cushion. Release the switch once the seat reaches the desired position.

Lumbar support (for power seat, if equipped)

ODEP039110N

The lumbar support can be adjusted by pressing the lumbar support switch on the side of the seat.

1. Press the front portion of the switch to increase support, or the rear portion of the switch, to decrease support.
2. Release the switch once it reaches the desired position.

Driver position memory system (if equipped, for power seat)

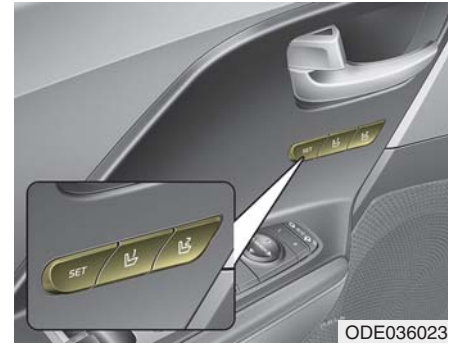

ODE036023

A driver position memory system is provided to store and recall the driver seat and outside rearview mirror position with a simple button operation. By saving the desired position into the system memory, different drivers can reposition the driver seat based upon their driving preference. If the battery is disconnected, the desired seat position memory will need to be re-saved.

⚠ WARNING - Driver Position Memory System

Never attempt to operate the driver position memory system while the vehicle is moving.

This could result in loss of control, and an accident causing death or serious injury.

Storing positions into memory using the buttons on the door

Storing driver's seat positions

1. Shift the shift lever into P while the engine start/stop button is ON or ignition switch is ON.
2. Adjust the driver's seat and outside rearview mirror comfortable for the driver.
3. Press SET button on the control panel. The system will beep once.
4. Press one of the memory buttons (1 or 2) within 4 seconds after pressing the SET button. The system will beep twice when memory has been successfully stored.

When recalling an adjustment memory button while sitting in the vehicle, you can be surprised by the setting chosen if the memory has been adjusted by someone else. If that occurs, immediately push the seat position control knob in the direction of the desired position to stop further undesired movement.

Recalling positions from memory

1. Shift the shift lever into P.
2. To recall the position in the memory, press the desired memory button (1 or 2). The system will beep once, then the driver's seat will automatically adjust to the stored position.

Adjusting the control switch for the driver's seat while the system is recalling the stored position will cause the movement to stop and move in the direction that the control switch is moved.

Easy access function (if equipped)

The system will move the driver's seat automatically as follows:

- Without smart key system
  - It will move the driver's seat rearward when the ignition key is removed and front driver's door is opened.
  - It will move the driver's seat forward when the ignition key is inserted.
- With smart key system
  - It will move the driver's seat rearward when the engine start/stop button is changed to the OFF position.
  - It will move the driver's seat forward when the engine start/stop button is changed to the ACC or START position.
  - It will move the driver's seat forward when you get in your vehicle with the smart key after closing the driver's door.

You can activate or deactivate this feature. Refer to "User settings" in chapter 4.

Headrest (for front seat)

ODE036074L

The driver's and front passenger's seats are equipped with a headrest for the occupant's safety and comfort.

The headrest not only provides comfort for the driver and front passenger, but also helps protect the head and neck in the event of a rear collision.

For maximum effectiveness in case of an accident, the headrest should be adjusted so the middle of the headrest is at the same height of the center of gravity of an occupant's head. Generally, the center of gravity of most people's head is similar with the height of the top of their eyes.

Also, adjust the headrest as close to your head as possible. For this reason, the use of a cushion that holds the body away from the seatback is not recommended.

⚠ WARNING - Headrest removal/adjustment

- **Do not operate the vehicle with the headrests removed. Headrests can provide critical neck and head support in a crash.**
- **Do not adjust the headrest height while the vehicle is in motion. Driver may lose control of the vehicle.**

Adjusting the height up and down

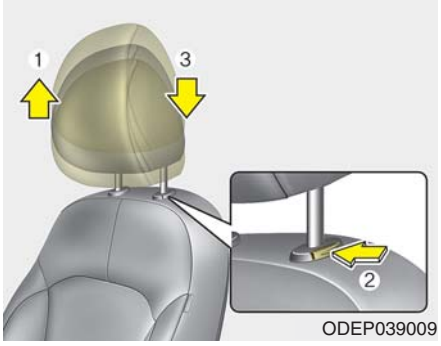

ODEP039009

To raise the headrest, pull it up to the desired position (1). To lower the headrest, push and hold the release button (2) on the headrest support and lower the headrest to the desired position (3).

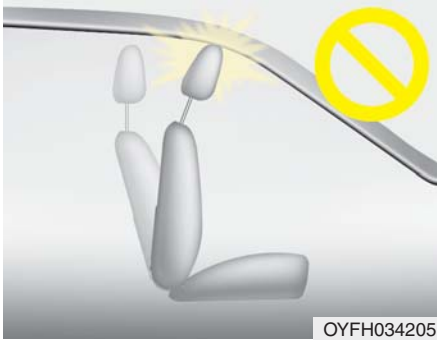
OYFH034205

✻ NOTICE

If you recline the seatback towards the front with the headrest and seat cushion raised, the headrest may come in contact with the sunvisor or other parts of the vehicle.

Removal and reinstallation

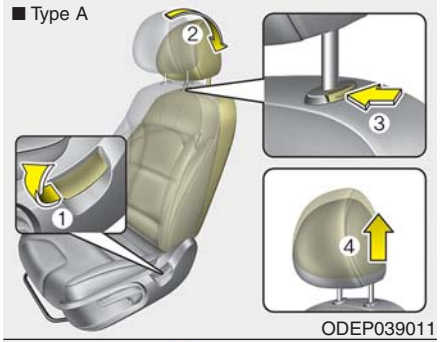

ODEP039011

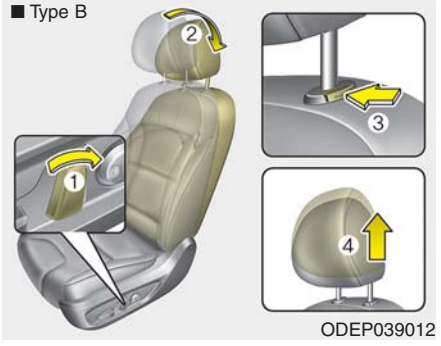

ODEP039012

To remove the headrest:

1. Recline the seatback (2) with the recline lever or switch (1).
2. Raise headrest as far as it can go.
3. Press the headrest release button (3) while pulling the headrest up (4).

⚠ WARNING - Headrest Removal

NEVER allow anyone to ride in a seat with the headrest removed or reserved. Headrests can provide critical neck and head support in a crash.

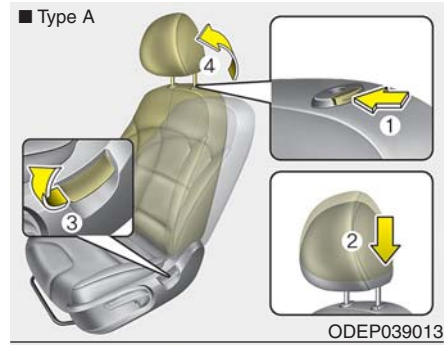

ODEP039013

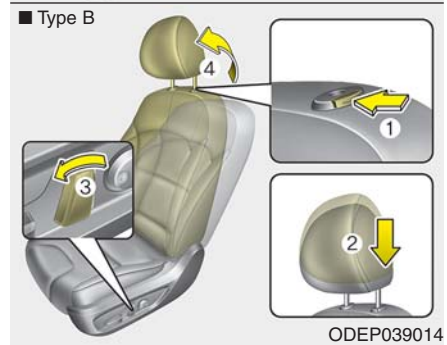

ODEP039014

To reinstall the headrest :

1. Put the headrest poles (2) into the holes while pressing the release button (1).
2. Recline the seatback (4) with the recline lever or switch (3).
3. Adjust the headrest to the appropriate height.

⚠ WARNING - Headrest Reinstallation

To reduce the risk of injury to the head or neck, always make sure the headrest is locked into position and adjusted properly after reinstalling.

Seatback pocket (if equipped)

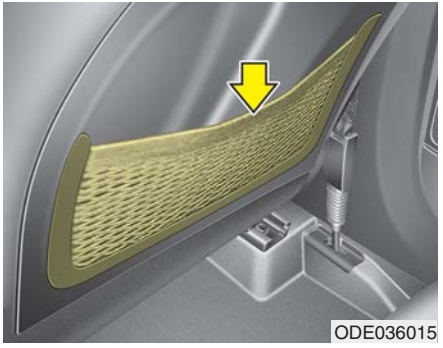

The seatback pocket is provided on the back of the front passenger's and driver's seatbacks.

⚠ WARNING - Seatback pockets

Do not put heavy or sharp objects in the seatback pockets. In an accident, they could come loose from the pocket and injure vehicle occupants.

Rear seat adjustment

Headrest

The rear seat is equipped with headrests in all the seating positions for the occupant's safety and comfort.

The headrest not only provides comfort for passengers, but also helps protect the head and neck in the event of a collision.

For maximum effectiveness in case of an accident, the headrest should be adjusted so the middle of the headrest is at the same height of the center of gravity of an occupant's head. Generally, the center of gravity of most people's heads is similar with the height as the top of their eyes.

Also, adjust the headrest as close to your head as possible. For this reason, the use of a cushion that holds the body away from the seatback is not recommended.

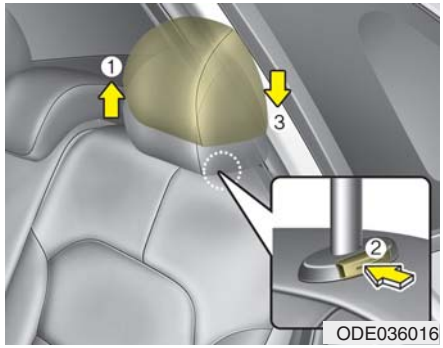

Adjusting the height up and down

To raise the headrest, pull it up to the desired position (1). To lower the headrest, push and hold the release button (2) on the headrest support and lower the headrest to the desired position (3).

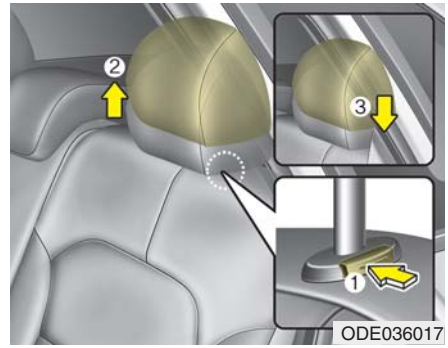

Removal and reinstallation

To remove the headrest, raise it as far as it can go then press the release button (1) while pulling the headrest upward (2).

To reinstall the headrest, put the headrest poles (3) into the holes while pressing the release button (1). Then adjust it to the appropriate height and ensure that it locks in position.

Armrest (if equipped)

To use the armrest, pull it forward from the seatback.

Folding the rear seat

The rear seatbacks may be folded to facilitate carrying long items or to increase the luggage capacity of the vehicle.

⚠ WARNING - Folded Seatback

The purpose of the fold-down rear seatbacks is to allow you to carry longer objects than could not otherwise be accommodated.

- **Never allow a passenger to sit on top of the folded down seatback while the car is moving. This is not a proper seating position since no seat belts are available for use.**
- **To reduce the risk of injury caused by sliding cargo within the passenger compartment of the vehicle, objects carried on the folded down seatback should not extend higher than the top of the front seats.**

⚠ CAUTION - Blocked Hybrid battery duct

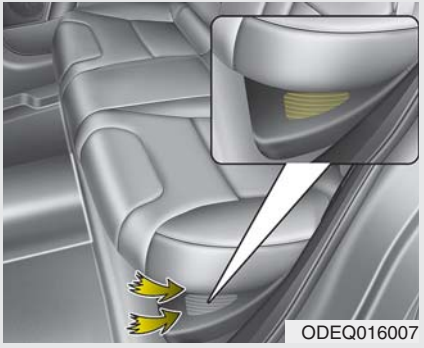

Do not put objects on the left side of rear seats. This could block the battery cooling duct causing battery degradation.

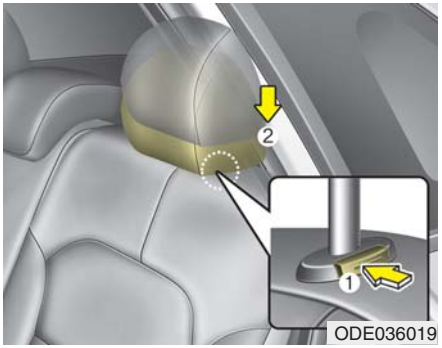

To fold down the rear seatback

1. Set the front seatback to the upright position and if necessary, slide the front seat forward.
2. Lower the rear headrests to the lowest position as above the picture.

⚠ WARNING - Objects

Objects carried on the folded down seatback should not extend higher than the top of the front seatbacks. This could allow cargo to slide forward and cause injury or damage during sudden stops.

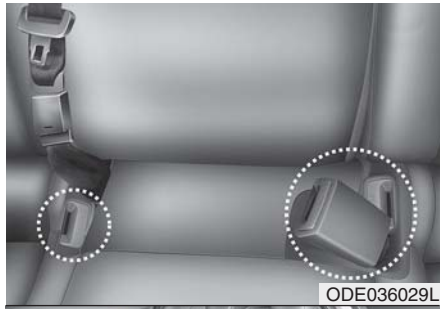
ODE036029L

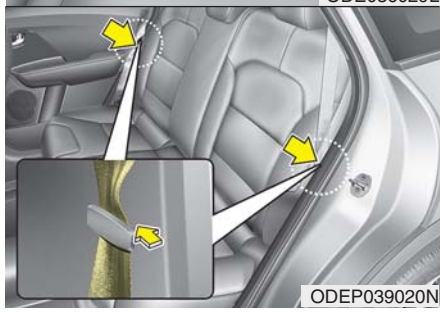
ODEP039020N

3. When folding the seat back, insert the rear seat belt buckle in the pocket between the rear seatback and cushion then make sure both seatbelts do not interfere with stowed luggage and cargo. Then insert the seat belt into the two webbing guide (or holder) located on both sides.

ODEP039021N

4. Pull on the seatback folding lever, then fold the seat toward the front of the vehicle. When you return the seatback to its upright position, always be sure it has locked into position by pushing on the top of the seatback.

ODEP039022N

5. To use the rear seat, lift and pull the seatback backward by lifting up seat back. Pull the seatback firmly until it clicks into place. Make sure the seatback is locked in place.
6. Return the rear seat belt to the proper position.

⚠ WARNING - Uprighting seat

When you return the seatback to its upright position, hold the seatback and return it slowly. If the seatback is returned without holding it, the back of the seat could spring forward, resulting in injury caused by being struck by the seatback.

⚠ WARNING - Rear Seatback

To ensure maximum protection in the event of an accident or sudden stop, when returning the rear seat to the upright position:

- **Be careful not to damage the seat belt webbing or buckle.**
- **Do not allow the seat belt webbing or buckle to become pinched or caught in the rear seat.**
- **Ensure the seatback is completely locked into its upright position by pushing on the top of the seatback.**

Failure to adhere to any of these instructions could result in serious injury or death in the event of a crash.

⚠ CAUTION - Damaging rear seat belt buckles

When you fold the rear seatback, insert the buckle between the rear seatback and cushion. Doing so can prevent the buckle from being damaged by the rear seatback.

When returning the rear seatbacks to the upright position, remember to return the rear shoulder belts to their proper position.

⚠ WARNING - Cargo

Cargo should always be secured to prevent it from being thrown about the vehicle in a collision and causing injury to the vehicle occupants. Do not place objects on the rear seats, since they cannot be properly secured and may hit the front seat occupants in a collision.

⚠ WARNING - Cargo loading

Make sure the engine is off, the dual clutch transmission is in P (Park) and the parking brake is securely applied whenever loading or unloading cargo. Failure to take these steps may allow the vehicle to move if the shift lever is inadvertently moved to another position.

SEAT BELTS

Seat belt restraint system

- For maximum restraint system protection, the seat belts must always be used whenever the vehicle is moving. A properly positioned shoulder belt should be positioned midway over your shoulder across your collarbone.
- Never allow children to ride in the front passenger seat. See child restraint system section for further discussion.

⚠ WARNING - Twisted seat belt

Make sure your seat belt is not twisted when worn. A twisted seat belt may not properly protect you in an accident and could even cut into your body.

⚠ WARNING - Shoulder Belt

- **Never wear the shoulder belt under your arm or behind your back. An improperly positioned shoulder belt cannot protect the occupant in a crash.**
- **Always wear both the shoulder portion and lap portion of the lap/shoulder belt.**

⚠ WARNING - Damaged seat belt

Replace the entire seat belt assembly if any part of the webbing or hardware is damaged as you can no longer be sure that a damaged seat belt will provide protection in a crash.

Seat belts are designed to bear upon the bony structure of the body, and should be worn low across the front of the pelvis, chest and shoulders, as applicable; wearing the lap section of the belt across the abdominal area must be avoided.

Seat belts should be adjusted as firmly as possible, consistent with comfort, to provide the protection for which they have been designed.

A slack belt will greatly reduce the protection afforded to the wearer.

Care should be taken to avoid contamination of the webbing with polishes, oils and chemicals, and particularly battery acid. Cleaning may safely be carried out using mild soap and water. The belt should be replaced if webbing becomes frayed, contaminated or damaged.

- No modifications or additions should be made by the user which would either prevent the seat belt adjusting devices from operating to remove slack, or prevent the seat belt assembly from being adjusted to remove slack.
- When you fasten the seat belt, be careful not to latch the seat belt in buckles of other seat. It's very dangerous and you may not be protected by the seat belt properly.
- Do not unfasten the seat belt and do not fasten and unfasten the seat belt repeatedly while driving. This could result in loss of control, and an accident causing death, serious injury, or property damage.
- When fastening the seat belt, make sure that the seat belt does not pass over objects that are hard or can break easily.

⚠ WARNING - Seat belt buckle

Do not allow foreign material (gum, crumbs, coins, liquids, etc.) to obstruct the seat belt buckle. This may prevent the seat belt from fastening securely.

Front seat belt warning

Driving conditions	Conditions		Warning pattern	
	Seat belt	Vehicle speed	Light	Sound
While parked (Ignition switch ON)	Buckled	0 km/h (0 mph)	Illuminates (for 6 seconds)	No sound
	Unbuckled			- Sounds (for 6 seconds, driver`s seat) - No sound (for passenger's seat)
While driving	Unbuckled	9 km/h (6 mph) or more but less than 20 km/h (12 mph)	Continuously Illuminates	No sound
	When the seatbelt is unbuckled after use	Less than 20 km/h (12 mph)	Continuously Illuminates	No sound
		20 km/h (12 mph) or more	Blinks continuously	Alarm sounds for 100 seconds

Seat belt - Driver's 3-point system with emergency locking retractor

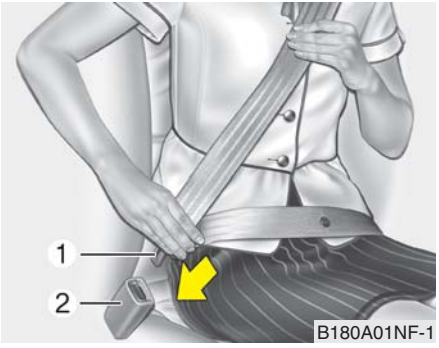

To fasten your seat belt:

To fasten your seat belt, pull it out of the retractor and insert the metal tab (1) into the buckle (2). There will be an audible "click" when the tab locks into the buckle.

⚠ WARNING

You should place the lap belt portion as low as possible and snugly across your hips, not on your waist. If the lap belt is located too high on your waist, it may increase the chance of injury in the event of a collision. Both arms should not be under or over the belt. Rather, one should be over and the other under, as shown in the illustration.

Never wear the seat belt under the arm near the door.

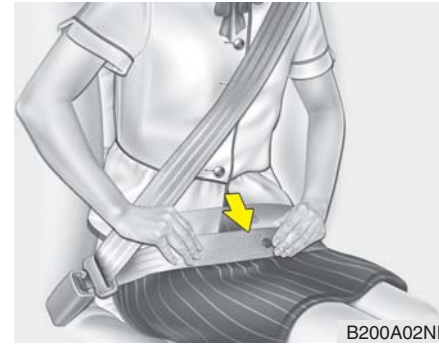

The seat belt automatically adjusts to the proper length only after the lap belt portion is adjusted manually so that it fits snugly around your hips. If you lean forward in a slow, easy motion, the belt will extend and let you move around. If there is a sudden stop or impact, however, the belt will lock into position. It will also lock if you try to lean forward too quickly.

✻ NOTICE

If you are not able to pull out the seat belt from the retractor, firmly pull the belt out and release it. Then you will be able to pull the belt out smoothly.

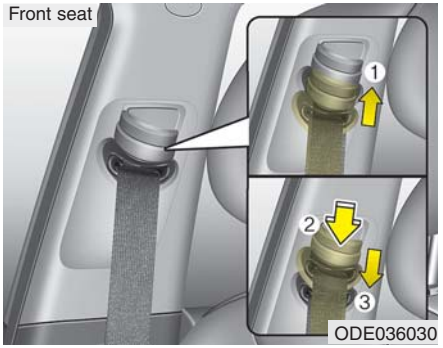

Height adjustment (For Front seat)

You can adjust the height of the shoulder belt anchor to one of the 4 positions for maximum comfort and safety.

The height of the adjusting seat belt should not be too close to your neck. The shoulder portion should be adjusted so that it lies across your chest and midway over your shoulder near the door and not your neck.

To adjust the height of the seat belt anchor, lower or raise the height adjuster into an appropriate position. To raise the height adjuster, pull it up (1). To lower it, push it down (3) while pressing the height adjuster button (2).

Release the button to lock the anchor into position. Try sliding the height adjuster to make sure that it has locked into position.

Improperly positioned seat belts can cause serious injuries in an accident.

⚠ WARNING - Shoulder belt positioning

Verify the shoulder belt anchor is locked into position at the appropriate height. Never position the shoulder belt across your neck or face. Improperly positioned seat belts can cause serious injuries in an accident.

⚠ WARNING - Seat belt replacement

Replace your seat belts after being in an accident. Failure to replace seat belts after an accident could leave you with damaged seat belts that will not provide protection in the event of another collision.

Seat belts - Front passenger and rear seat 3-point system with combination locking retractor

To fasten your seat belt:

Combination retractor type seat belts are installed in the rear seat positions to help accommodate the installation of child restraint systems. Although a combination retractor is also installed in the front passenger seat position, it is strongly recommended that children always be seated in the rear seat. NEVER place any infant restraint system in the front seat of the vehicle.

This type of seat belt combines the features of both an emergency locking retractor seat belt and an automatic locking retractor seat belt. To fasten your seat belt, pull it out of the retractor and insert the metal tab into the buckle. There will be an audible "click" when the tab locks into the buckle. When not securing a child restraint, the seat belt operates in the same way as the driver's seat belt (Emergency Locking Retractor Type). It automatically adjusts to the proper length only after the lap belt portion of the seat belt is adjusted manually so that it fits snugly around your hips.

When the seat belt is fully extended from the retractor to allow the installation of a child restraint system, the seat belt operation changes to allow the belt to retract, but not to extend (Automatic Locking Retractor Type). Refer to “Using a child restraint system” in this section.

✻ NOTICE

Although the combination retractor provides the same level of protection for seated passengers in either emergency or automatic locking modes, have the seated passengers use the emergency locking feature for improved convenience. The automatic locking function is intended to facilitate child restraint installation. To convert from the automatic locking feature to the emergency locking operation mode, allow the unbuckled seat belt to fully retract.

⚠ CAUTION

Do NOT fold down the left portion of the rear seat back when the rear center seat belt is buckled. ALWAYS UNBUCKLE the rear center seat belt before folding down the left portion of the rear seat back. If the rear center seat belt is buckled when the left portion of the rear seat back is folded down, distortion and damage to the top portion of the seat back and seat belt garnish may result, causing the seat back to lock into the folded down position.

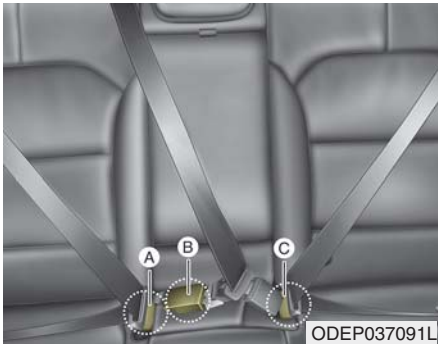

The seat belt should be locked into the buckle on each seat cushion to be properly fastened.

❊ A : Rear right seat belt fastening buckle

B : Rear center seat belt fastening buckle

C : Rear left seat belt fastening buckle

⚠ WARNING

Prior to fastening the rear seat belts, ensure the latch matches the seat belt buckle. Forcefully fastening the left or right seat belt to the center buckle can result in an improper fastening scenario that will not protect you in an accident.

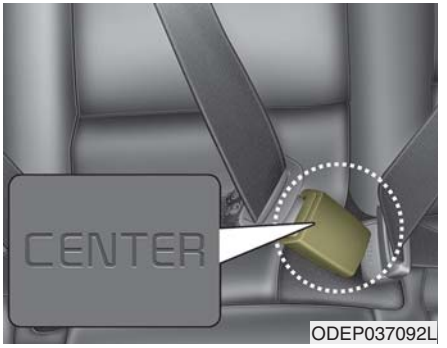

When using the rear center seat belt, the buckle with the “CENTER” mark must be used.

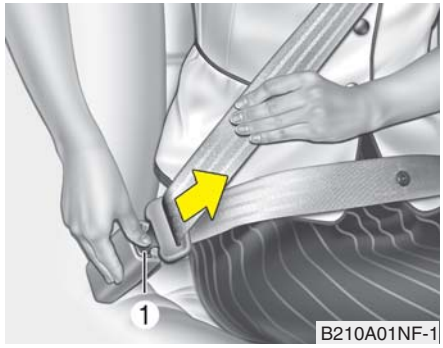

To release the seat belt:

The seat belt is released by pressing the release button (1) on the locking buckle. When it is released, the belt should automatically draw back into the retractor.

If this does not happen, check the belt to be sure it is not twisted, then try again.

Stowing the rear seat belt

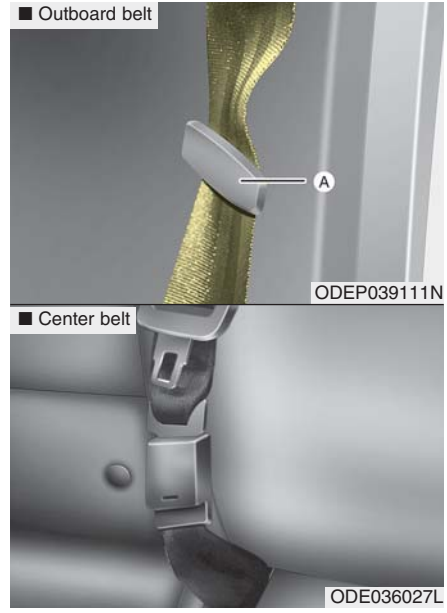

- If the center seat belt is not in use, always lock the latch plate into the buckle as above illustration.
- The rear seat belt buckles can be stowed in the pocket between the rear seatback and cushion when not in use.
- Then insert the seat belt into the two webbing guide (or holder)(A) located on both sides. It will help keep the belts from being trapped behind or under the seats.

  After inserting the seat belt, tighten the belt webbing by pulling it up.

Pre-tensioner seat belt

Your vehicle is equipped with driver's and front passenger's pre-tensioner seat belts (retractor pretensioner and EFD (Emergency Fastening Device)). The pre-tensioner seat belts may be activated, when a frontal collision is severe enough, together with the air bags.

When the vehicle stops suddenly, or if the occupant tries to lean forward too quickly, the seat belt retractor may lock into position. In certain frontal collisions, the pre-tensioner will activate and pull the seat belt into tighter contact against the occupant's body.

(1) Retractor Pretensioner

The purpose of the retractor pre-tensioner is to make sure that the shoulder belts fit in tightly against the occupant's upper body in certain frontal collisions.

(2) EFD (Emergency Fastening Device)

The purpose of the EFD is to make sure that the pelvis belts fit in tightly against the occupant's lower body in certain frontal collisions.

If the system senses excessive tension on the driver or passenger's seat belt when the pre-tensioner system activates, the load limiter inside the retractor pre-tensioner will release some of the pressure on the affected seat belt.

✻ NOTICE

When the pre-tensioner seat belts are activated, a loud noise may be heard and fine dust, which may appear to be smoke, may be visible in the passenger compartment. These are normal operating conditions and are not hazardous.

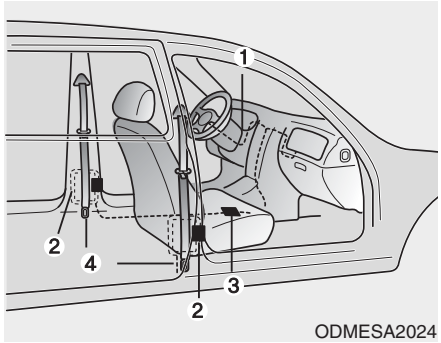

❊ The actual position of seat belt pre-tensioner system components may differ from the illustration.

The seat belt pre-tensioner system consists mainly of the following components. Their locations are shown in the illustration:

(1) SRS air bag warning light

(2) Retractor pre-tensioner assembly

(3) SRS control module

(4) Emergency fastening device (EFD)

⚠ WARNING - Skin Irritation

Wash all exposed skin areas thoroughly after an accident in which the pre-tensioner seat belts were activated. The fine dust from the pre-tensioner activation may cause skin irritation and should not be breathed for prolonged periods.

✻ NOTICE

- **Both the driver's and front passenger's seat belt pre-tensioner system may be activated not only in certain frontal collisions but also in certain side collisions or rollovers, if the vehicle is equipped with a side or curtain air bag.**
- **Because the sensor that activates the SRS air bag is connected with the pre-tensioner seat belt, the SRS air bag warning light on the instrument panel will illuminate for approximately 6 seconds after engine start/stop button has been changed to ON position, and then it should turn off.**

If the pre-tensioner seat belt system is not working properly, this warning light will illuminate even if there is not a malfunction with the SRS air bag. If the SRS air bag warning light does not illuminate when engine start/stop button has been changed to ON, or if it remains illuminated after illuminating for approximately 6 seconds, or if it illuminates while the vehicle is being driven, have an authorized Kia dealer inspect the pre-tensioner seat belt and SRS air bag system as soon as possible.

✻ NOTICE

Do not attempt to service or repair the pre-tensioner seat belt system in any manner. Do not attempt to inspect or replace the pre-tensioner seat belts yourself. This must be done by an authorized Kia dealer.

⚠ WARNING - Hot pretensioner

Do not touch the pre-tensioner seat belt assemblies for several minutes after they have been activated. When the pre-tensioner seat belt mechanism fires during a collision, the pre-tensioner becomes hot and can burn you.

Pre-tensioners are designed to operate only one time. After activation, pre-tensioner seat belts must be replaced. If the pre-tensioner must be replaced, contact an authorized Kia dealer.

Seat belt precautions

Infant or small child

Most countries have child restraint laws. You should be aware of the specific requirements in your country. Child and/or infant seats must be properly placed and installed in the rear seat. For more information about the use of these restraints, refer to “Child restraint system” in this section.

✻ NOTICE

Small children are best protected from injury in an accident when properly restrained in the rear seat by a child restraint system that meets the requirements of the Safety Standards of your Country. Before buying any child restraint system, make sure that it has a label certifying that it meets Safety Standards of your Country. The restraint must be appropriate for your child's height and weight. Check the label on the child restraint for this information. Refer to “Child restraint system” in this section.

Larger children

Children who are too large for child restraint systems should always occupy the rear seat and use the available lap/shoulder belts. The lap portion should be fastened and snugged on the hips as low as possible. Check periodically to insure that the belt fits. A child's squirming could put the belt out of position. Children are given the most safety in the event of an accident when they are restrained by a proper restraint system in the rear seat. If a larger child (over age 13) must be seated in the front seat, the child should be securely restrained by the available lap/shoulder belt and the seat should be placed in the rearmost position. Children age 13 and under should be restrained securely in the rear seat. NEVER place a child age 13 and under in the front seat. NEVER place a rear facing child seat in the front seat of a vehicle.

If the shoulder belt portion slightly touches the child's neck or face, try placing the child closer to the center of the vehicle. If the shoulder belt still touches their face or neck they need to be returned to a child restraint system.

⚠ WARNING - Small children

Do not allow small children to ride in the vehicle without an appropriate child restraint system. If the shoulder belt comes in contact with your child's neck or face, your child is too small to ride in the vehicle. In a crash the seat belt will inflict injury to your child's neck, throat and face.

Restraint of pregnant women

Pregnant women should wear lap/shoulder belt assemblies whenever possible according to specific recommendations by their doctors. The lap portion of the belt should be worn AS SECURELY AND LOW AS POSSIBLE.

⚠ WARNING - Pregnant women

Pregnant women must never place the lap portion of the seat belt above or on the abdomen where the fetus is located. The force of the seat belt during a collision and may crush and injure the fetus.

Injured person

A seat belt should be used when an injured person is being transported. When this is necessary, you should consult a physician for recommendations.

One person per belt

Two people (including children) should never attempt to use a single seat belt. This could increase the severity of injuries in case of an accident.

Do not lie down

To reduce the chance of injuries in the event of an accident and to achieve maximum effectiveness of the restraint system, all passengers should be sitting up and the front and rear seats should be in an upright position when the vehicle is moving. A seat belt cannot provide proper protection if the person is lying down in the rear seat or if the front and rear seats are in a reclined position.

Care of seat belts

Seat belt systems should never be disassembled or modified. In addition, care should be taken to assure that seat belts and belt hardware are not damaged by seat hinges, doors or other abuse.

⚠ WARNING - Pinched seat belt

Make sure that the webbing and/or buckle does not get caught or pinched in the rear seat when returning the rear seatback to its upright position. A caught or pinched webbing/ buckle may become damaged and could fail during a collision or sudden stop.

⚠ WARNING

Seatbelts can become hot in a vehicle that has been closed up in sunny weather. They could burn infants and children.

Periodic inspection

All seat belts should be inspected periodically for wear or damage of any kind. Any damaged parts should be replaced as soon as possible.

Keep belts clean and dry

Seat belts should be kept clean and dry. If belts become dirty, they can be cleaned by using a mild soap solution and warm water. Bleach, dye, strong detergents or abrasives should not be used because they may damage and weaken the fabric.

When to replace seat belts

The entire in-use seat belt assembly or assemblies should be replaced if the vehicle has been involved in an accident. This should be done even if no damage is visible. Additional questions concerning seat belt operation should be directed to an authorized Kia dealer.

CHILD RESTRAINT SYSTEM (CRS)

Children Always in the Rear

⚠ WARNING - Restraint Location

Never install a child or infant seat on the front passenger's seat. A child riding in the front passenger seat can be forcefully struck by an inflating airbag and seriously injured.

⚠ WARNING - Hot Child Restraint

A child restraint system can become very hot if it is left in a closed vehicle on a sunny day. Be sure to check the seat cover, buckles and latches before placing a child in the restraint system.

Children under age 13 must always ride in the rear seats and must always be properly restrained to minimize the risk of injury in an accident, sudden stop or sudden maneuver. According to accident statistics, children are safer when properly restrained in the rear seats than in the front seat. Even with air bags, children can be seriously injured or killed. Children too large for a child restraint must use the seat belts provided.

Most countries have child restraint laws which require children to travel in approved child restraint devices. The laws governing the age or height/weight restrictions at which seat belts can be used instead of child restraints differs among countries, so you should be aware of the specific requirements in your country, and where you are travelling.

Child restraint systems must be properly placed and installed in the rear seat. You must use a commercially available child restraint system that meets the requirements of the Safety Standards of your Country.

Child restraint systems are generally designed to be secured in a vehicle seat by lap belt portion of a lap/shoulder belt, or by a LATCH system in the rear seats of the vehicle.

Child restraint system (CRS)

Infants and younger children must be restrained in an appropriate rear-facing or forward-facing CRS that has first been properly secured to the rear seat of the vehicle. Read and comply with the instructions for installation and use provided by the manufacturer of the child restraint.

⚠ WARNING
- Child Restraint Installation

An improperly secured child restraint can increase the risk of serious injury or death in an accident. Always take the following precautions when using a child restraint system:

- **Always follow the child restraint system manufacturer's instructions for installation and use.**

(Continued)

(Continued)

- **Always properly restrain your child in the child restraint.**
- **If the vehicle head restraint prevents proper installation of a child seat (as described in the child restraint system manual), the head restraint of the respective seating position shall be readjusted or entirely removed.**
- **Do not use an infant carrier or a child safety seat that "hooks" over a seatback, it may not provide adequate protection in an accident.**

✻ NOTICE

After an accident, have a Kia dealer check the child restraint system, seat belts, tether anchors and lower anchors.

Selecting a Child Restraint System (CRS)

When selecting a CRS for your child, always:

- Make sure the CRS has a label certifying that it meets applicable Safety Standards of your Country.
- Select a child restraint based on your child's height and weight. The required label or the instructions for use typically provide this information.
- Select a child restraint that fits the vehicle seating position where it will be used.
- Read and comply with the warnings and instructions for installation and use provided with the child restraint system.

⚠ WARNING - Holding Children

Never hold a child in your arms or lap when riding in a vehicle. The violent forces created during a crash could tear the child from your arms and throw the child against the car's interior. Always use a child restraint system which is appropriate for your child's height and weight.

⚠ WARNING - Unattended Children

Never leave children unattended in a vehicle. The car can heat up very quickly, resulting in injuries to the child in the vehicle.

⚠ WARNING - Seat Belt Use

Do not use one seat belt for two occupants at the same time. This may eliminate any safety benefit provided by the seat belt to the occupants.

Child restraint system types

There are three main types of child restraint systems: rear-facing seats, forward-facing seats, and booster seats. They are classified according to the child's age, height and weight.

ODE036031

Rear-facing child seats

A rear-facing child seat provides restraint with the seating surface against the back of the child. The harness system holds the child in place, and in an accident, acts to keep the child positioned in the seat and reduces the stress to the neck and spinal cord.

All children under age one must always ride in a rear-facing infant child restraint.

Convertible and 3-in-1 child seats typically have higher height and weight limits for the rear-facing position, allowing you to keep your child rear-facing for a longer period of time.

Continue to use a rear-facing child seat for as long as your child will fit within the height and weight limits allowed by the child seat manufacturer. It's the best way to keep them safe. Once your child has outgrown the rear-facing child restraint, your child is ready for a forward-facing child restraint with a harness.

ODE026007

Forward-facing child restraints

A forward-facing child seat provides restraint for the child's body with a harness. Keep children in a forward-facing child seat with a harness until they reach the top height or weight limit allowed by your child restraint's manufacturer.

Once your child outgrows the forward-facing child restraint, your child is ready for a booster seat.

Booster seats

A booster seat is a restraint designed to improve the fit of the vehicle's seat belt system. A booster seat positions the seat belt so that it fits properly over the lap of your child.

Keep your child in a booster seat until they are big enough to sit in the seat without a booster and still have the seat belt fit properly. For a seat belt to fit properly, the lap belt must lie snugly across the upper thighs, not the stomach. The shoulder belt should lie snug across the shoulder and chest and not across the neck or face. Children under age 13 must always ride in the rear seats and must always be properly restrained to minimize the risk of injury.

Installing a Child Restraint System (CRS)

After selecting a proper child seat for your child, check to make sure it fits properly in your vehicle. Follow the instructions provided by the manufacturer when installing the child seat. Note these general steps when installing the seat to your vehicle:

- **Properly secure the child restraint to the vehicle.** All child restraints must be secured to the vehicle with the lap part of a lap/shoulder belt or with the LATCH system.
- **Make sure the child restraint is firmly secured.** After installing a child restraint to the vehicle, push and pull the seat forward and from side-to-side to verify that it is securely attached to the seat. A child restraint secured with a seat belt should be installed as firmly as possible. However, some side-to-side movement can be expected.
- **Secure the child in the child restraint.** Make sure the child is properly strapped in the child restraint according to the manufacturer instructions.

Lower Anchors and Tether for Children (LATCH) System

The LATCH system holds a child restraint during driving and in an accident. This system is designed to make installation of the child restraint easier and reduce the possibility of improperly installing your child restraint. The LATCH system uses anchors in the vehicle and attachments on the child restraint. The LATCH system eliminates the need to use seat belts to secure the child restraint to the rear seats.

Lower anchors are metal bars built into the vehicle. There are two lower anchors for each LATCH seating position that will accommodate a child restraint with lower attachments.

To use the LATCH system in your vehicle, you must have a child restraint with LATCH attachments.

The child seat manufacturer will provide you with instructions on how to use the child seat with its attachments for the LATCH lower anchors.

ODE036077L

LATCH anchors have been provided in the left and right outboard rear seating positions. Their locations are shown in the illustration. There are no LATCH anchors provided for the center rear seating position.

⚠ WARNING - LATCH Lower Anchors

Never attempt to attach a LATCH equipped seat in the center seating position. LATCH lower anchors are only to be used in the left and right rear outboard seating positions. You may damage the anchors or the anchors may fail and break in a collision.

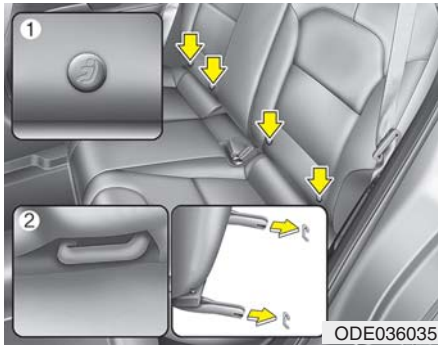

The lower anchor position indicator symbols are located on the left and right rear seat backs to identify the position of the lower anchors in your vehicle (see arrows in illustration).

The LATCH anchors are located between the seatback and the seat cushion of the rear seat left and right outboard seating positions.

To use the lower anchor, push the upper portion of the lower anchor cover.

❊ (1) : Lower Anchor position indicator
(2) : Lower Anchor

Securing a child restraint with the LATCH anchors system

To install a LATCH-compatible child restraint in either of the rear outboard seating positions:

1. Move the seat belt buckle away from the lower anchors.
2. Move any other objects away from the anchors that could prevent a secure connection between the child restraint and the lower anchors.
3. Place the child restraint on the vehicle seat, then attach the seat to the lower anchors according to the instructions provided by the child restraint manufacturer.
4. Follow the child restraint instructions for properly adjusting and tightening the lower attachments on the child restraint to the lower anchors.

⚠ WARNING

Take the following precautions when using the LATCH system:

- **Read and follow all installation instructions provided with your child restraint system.**
- **To prevent the child from reaching and taking hold of unretracted seat belts, buckle all unused rear seat belts and retract the seat belt webbing behind the child. Children can be strangled if a shoulder belt becomes wrapped around their neck and the seat belt tightens.**
- **NEVER attach more than one child restraint to a single anchor. This could cause the anchor or attachment to come loose or break.**
- **Always have the LATCH system inspected by your authorized Kia dealer after an accident. An accident can damage the LATCH system and may not properly secure the child restraint.**

Securing a child restraint seat with "Tether Anchor" system

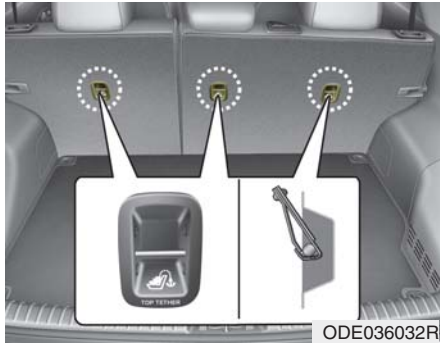

ODE036032R

First secure the child restraint with the LATCH lower anchors or the seat belt. If the child restraint manufacturer recommends that the top tether strap be attached, attach and tighten the top tether strap to the top tether strap anchor.

Child restraint hook holders are located on the shelf behind the rear seats.

⚠ WARNING

Take the following precautions when installing the tether strap:

- **Read and follow all installation instructions provided with your child restraint system.**
- **NEVER attach more than one child restraint to a single tether anchor. This could cause the anchor or attachment to come loose or break.**
- **Do not attach the tether strap to anything other than the correct tether anchor. It may not work properly if attached to something else.**
- **Do not use the tether anchors for adult seat belts or harnesses, or for attaching other items or equipment to the vehicle.**
- **Always fasten the seat belts behind the child restraint seat when they are not used to secure the child seat. Failure to do so may result in child strangulation.**

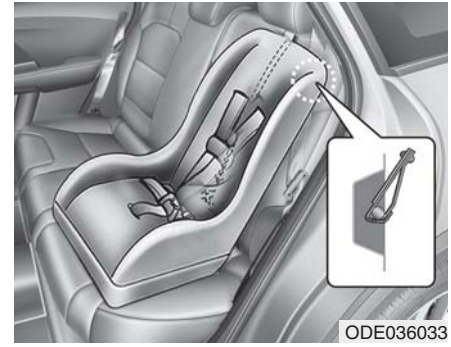
ODE036033

To install the tether anchor:

1. Route the child restraint tether strap over the child restraint seatback. Route the tether strap under the head restraint and between the head restraint posts, or route the tether strap over the top of the vehicle seatback. Make sure the strap is not twisted.
2. Connect the tether strap hook to the tether anchor, then tighten the tether strap according to the child seat manufacturer's instructions to firmly secure the child restraint to the seat.

3. Check that the child restraint is securely attached to the seat by pushing and pulling the seat forward and from side-to-side.

Securing a child restraint with a lap/shoulder belt

When not using the LATCH system, all child restraints must be secured to a vehicle rear seat with the lap part of a lap/shoulder belt.

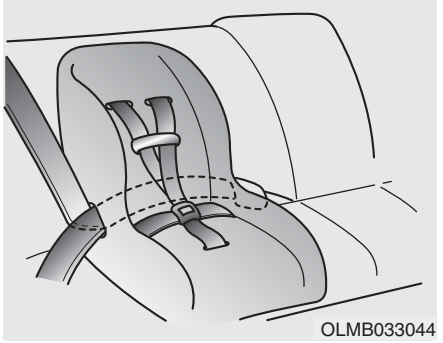

Automatic locking mode

Since all passenger seat belts move freely under normal conditions and only lock under extreme or emergency conditions (emergency locking mode), you must manually pull the seat belt all the way out to shift the retractor to the “Automatic Locking” mode to secure a child restraint.

The “Automatic Locking” mode will help prevent the normal movement of the child in the vehicle from causing the seat belt to loosen and compromise the child restraint system. To secure a child restraint system, use the following procedure.

To install a child restraint system on the rear seats, do the following:

1. Place the child restraint system on a rear seat and route the lap/ shoulder belt around or through the child restraint, following the restraint manufacturer's instructions.

   Be sure the seat belt webbing is not twisted.

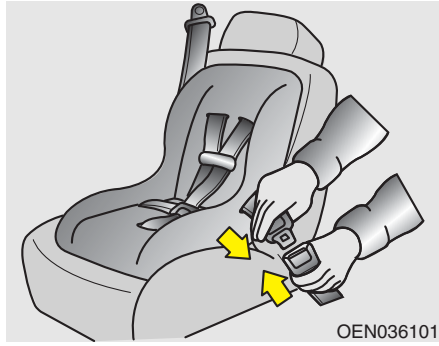

2. Fasten the lap/shoulder belt latch into the buckle. Listen for the distinct "click" sound.

   Position the release button so that it is easy to access in case of an emergency.

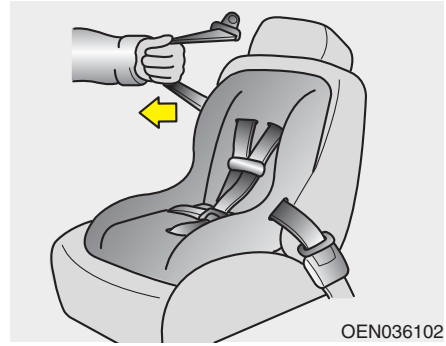

3. Pull the shoulder portion of the seat belt all the way out. When the shoulder portion of the seat belt is fully extended, it will shift the retractor to the "Automatic Locking" (child restraint) mode.

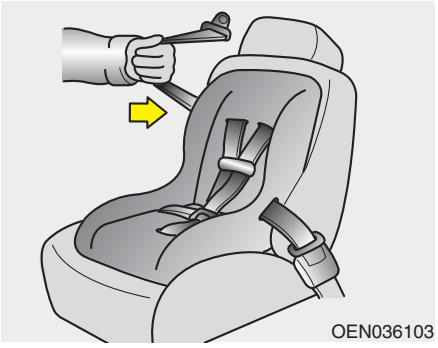

4. Slowly allow the shoulder portion of the seat belt to retract and listen for an audible "clicking" or "ratcheting" sound. This indicates that the retractor is in the "Automatic Locking" mode. If no distinct sound is heard, repeat steps 3 and 4.

5. Remove as much slack from the belt as possible by pushing down on the child restraint system while feeding the shoulder belt back into the retractor.
6. Push and pull on the child restraint system to confirm that the seat belt is holding it firmly in place. If it is not, release the seat belt and repeat steps 2 through 6.
7. Double check that the retractor is in the "Automatic Locking" mode by attempting to pull more of the seat belt out of the retractor. If you cannot, the retractor is in the "Automatic Locking" mode.

If your CRS manufacturer instructs or recommends you to use a tether anchor with the lap/shoulder belt, refer to the previous pages for more information.

✻ NOTICE

When the seat belt is allowed to retract to its fully stowed position, the retractor will automatically switch from the "Automatic Locking" mode to the emergency lock mode for normal adult usage.

⚠ WARNING - Auto lock mode

Set the retractor to Automatic Lock mode when installing any child restraint system. If the retractor is not in the Automatic Locking mode, the child restraint can move when your vehicle turns or stops suddenly.

To remove the child restraint, press the release button on the buckle and then pull the lap/shoulder belt out of the restraint and allow the seat belt to retract fully.

AIR BAG - ADVANCED SUPPLEMENTAL RESTRAINT SYSTEM

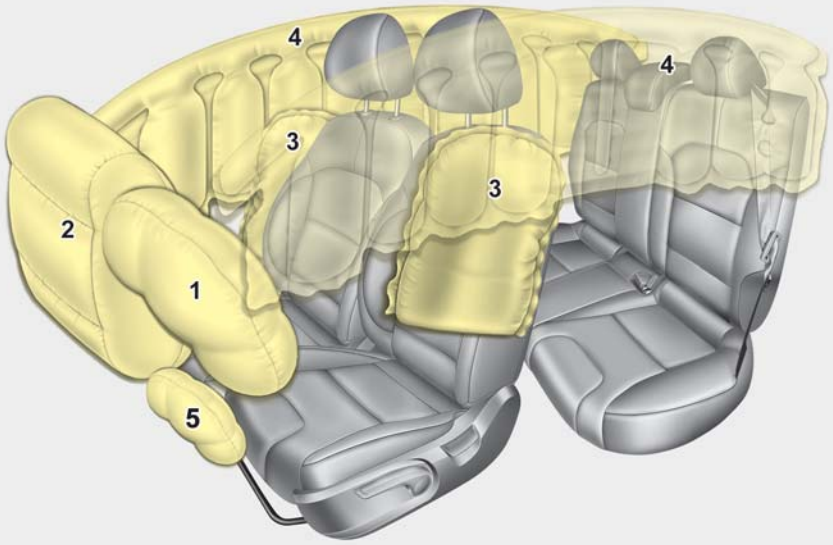

The actual air bags in the vehicle may differ from the illustration.

ODEP039036N

(1) Driver's front air bag
(2) Passenger's front air bag
(3) Side air bag
(4) Curtain air bag
(5) Driver's knee air bag

Even in vehicles with air bags, you and your passengers must always wear the safety belts provided in order to minimize the risk and severity of injury in the event of a collision or rollover.

How does the air bag system operate?

- Air bags are activated (able to inflate if necessary) only when the ignition switch is turned to the ON or START position or when engine start/stop button has been changed to ON position.
- The appropriate air bags inflate instantly in the event of a serious frontal collision or side collision in order to help protect the occupants from serious physical injury.
- There is no single speed at which the air bags will inflate.

  Generally, air bags are designed to inflate based upon the severity of a collision and its direction. These two factors determine whether the sensors produce an electronic deployment/ inflation signal.
- Air bag deployment depends on a number of factors including vehicle speed, angles of impact, and, the density and stiffness of the vehicles or objects which your vehicle hits in the collision. The determining factors are not limited to those mentioned above.
- The front air bags will completely inflate and deflate in an instant.

  It is virtually impossible for you to see the air bags inflate during an accident.

  It is much more likely that you will simply see the deflated air bags hanging out of their storage compartments after the collision.
- In addition to inflating in serious side collisions, side and/or curtain air bags will inflate if the sensing system detects a rollover.
- When a rollover is detected, side and/or curtain air bags will remain inflated longer to help provide protection from ejection, especially when used in conjunction with the seat belts.
- In order to help provide protection, the air bags must inflate rapidly. The speed of the air bag inflation is a consequence of extremely short time in which to inflate the air bag between the occupant and the vehicle structures before the occupant impacts those structures. This speed of inflation reduces the risk of serious or life-threatening injuries and is thus a necessary part of the air bag design.

  However, air bag inflation can also cause injuries which can include facial abrasions, bruises and broken bones because the inflation speed also causes the air bags to expand with a great deal of force.
- **There are even circumstances under which contact with the steering wheel or passenger air bag can cause fatal injuries, especially if the occupant is positioned excessively close to the steering wheel or passenger air bag.**

⚠ WARNING - Airbag inflation

Sit as far back as possible from the steering wheel while still maintaining comfortable control of your vehicle. A distance of at least 25 cm (10 in.) from your chest to the steering wheel is recommended. Failure to do so can result in airbag inflation injuries to the driver.

Noise and smoke

When inflated, the air bags make a loud noise and leave smoke and powder in the air inside the vehicle. This is normal and is a result of the ignition of the air bag inflator. After the air bag inflates, you may feel substantial discomfort in breathing due to the contact of your chest with both the seat belt and the air bag, as well as from breathing the smoke and powder. **Open your doors and/or windows as soon as possible after impact in order to reduce discomfort and prevent prolonged exposure to the smoke and powder.**

Though smoke and powder are non-toxic, it may cause irritation to the skin (eyes, nose and throat, etc). If this is the case, wash and rinse with cold water immediately and consult a doctor if the symptom persists.

⚠ WARNING - Hot components

Do not touch the air bag storage area's internal components immediately after airbag inflation. The air bag related parts in the steering wheel, instrument panel and the roof rails above the front and rear doors are very hot. Hot components can result in burn injuries.

⚠ WARNING

Do not install or place any accessories near air bag deployment areas, such as the instrument panel, windows, pillars, and roof rails.

Do not install a child restraint on the front passenger's seat

1JBH3051

Never place a rear-facing child restraint in the front passenger's seat. If the air bag deploys, it would impact the rear-facing child restraint, causing serious or fatal injury.

In addition, do not place front-facing child restraints in the front passenger's seat. If the front passenger air bag inflates, it could cause serious or fatal injuries to the child.

⚠ WARNING - Air bag deployment

When children are seated in the rear outboard seats of a vehicle equipped with side and/or curtain air bags, install the child restraint system as far away from the door side as possible. Inflation of the side and/or curtain air bags could impact the child.

Air bag warning light

W7-147

The purpose of air bag warning light in your instrument panel is to alert you of a potential problem with your air bag system, which could include your side and/or curtain air bags used for rollover protection.

SRS components and functions

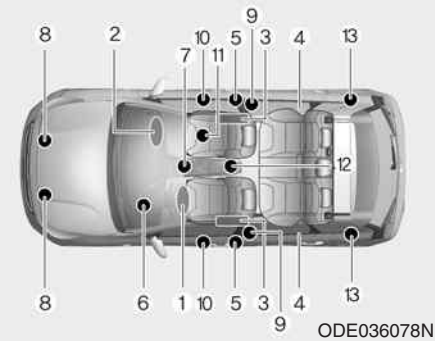

❊ The actual position of SRS components may differ from the illustration.

The SRS consists of the following components:

1. Driver's front air bag module
2. Passenger's front air bag module
3. Side air bag modules
4. Curtain air bag modules
5. Retractor pre-tensioner assemblies
6. Air bag warning light
7. SRS control module (SRSCM)
8. Front impact sensors
9. Side impact sensors
10. Side pressure sensors
11. Occupant detection system (Front passenger's seat only)
12. Front passenger's seat belt buckle sensor
13. Retractor pre-tensioner assemblies*

*: if equipped

If the air bag warning light is illuminated for more than 6 seconds after engine start/stop button has been changed to ON, or of it illuminates during vehicle operation, an SRS component may not be functioning properly and you should have your vehicle checked by an authorized Kia dealer.

If any of the following conditions occur, this indicates a malfunction in the air bag system. Have an authorized Kia dealer inspect the air bag system as soon as possible.

- The light does not turn on briefly when you change engine start/stop button to ON.
- The light stays on after illuminating for approximately 6 seconds.
- The light comes on while the vehicle is in motion.
- The light blinks when engine start/stop button is ON position.

Driver's front air bag (1)

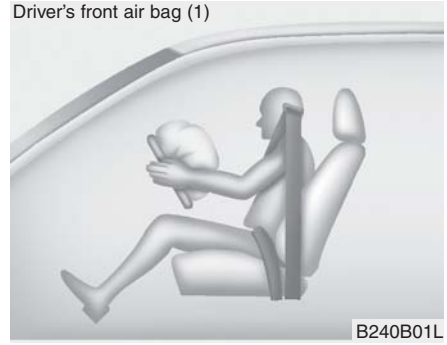

The front air bag modules are located both in the center of the steering wheel and in the front passenger's panel above the glove box. When the SRSCM detects a sufficiently severe impact to the front of the vehicle, it will automatically deploy the front air bags.

Driver's front air bag (2)

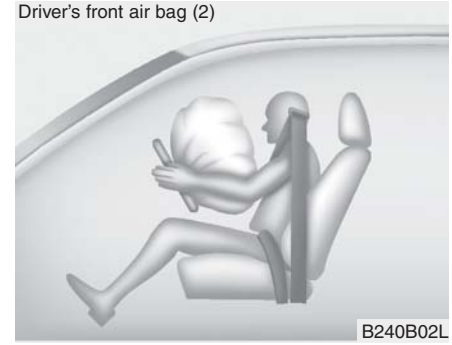

Upon deployment, tear seams molded directly into the pad covers will separate under pressure from the expansion of the air bags. Further opening of the covers then allows full inflation of the air bags.

Driver's front air bag (3)

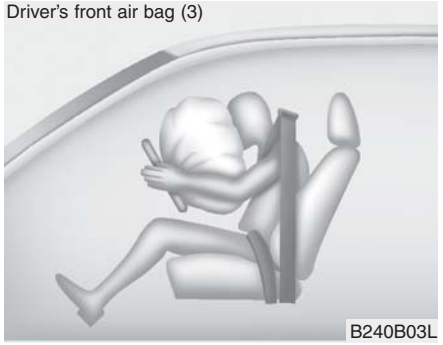

A fully inflated air bag, in combination with a properly worn seat belt, slows the driver's or the passenger's forward motion, reducing the risk of head and chest injury.

After complete inflation, the air bag immediately starts deflating, enabling the driver to maintain forward visibility and the ability to steer or operate other controls.

Passenger's front air bag

⚠ WARNING - Air bag obstructions

Do not install or place any accessories on the steering wheel, instrument panel, or on the front passenger's panel above the glove box in a vehicle. Such objects may become dangerous projectiles if the air bag deploys.

⚠ WARNING - Flying objects

Do not place any objects (an umbrella, bag, etc.) between the front door and the front seat. Such objects may become dangerous projectiles if the side airbag inflates.

- If an air bag deploys, there may be a loud noise followed by a fine dust released in the vehicle. These conditions are normal and are not hazardous - the air bags are packed in this fine powder. The dust generated during air bag deployment may cause skin or eye irritation as well as aggravate asthma for some persons. Always wash all exposed skin areas thoroughly with cold water and a mild soap after an accident in which the air bags were deployed.

- The SRS can function only when engine start/stop button is ON position. If the SRS air bag warning light does not illuminate, or continuously remains on after illuminating for about 6 seconds when engine start/stop button is ON position, or after the engine is started, comes on while driving, the SRS is not working properly. If this occurs, have your vehicle immediately inspected by an authorized Kia dealer.

✻ NOTICE

Before you replace a fuse or disconnect a battery terminal, change Engine Start/Stop button to the OFF position. Never remove or replace the air bag related fuse(s) when engine start/stop button is ON position. Failure to heed this warning will cause the SRS air bag warning light to illuminate.

Occupant Detection System (ODS)

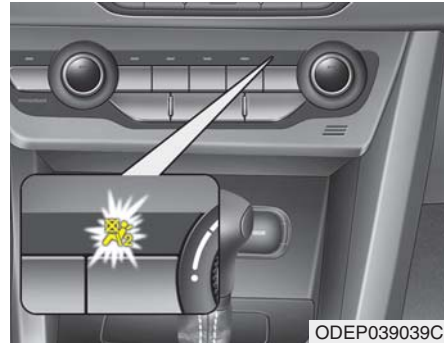
ODEP039039C

Your vehicle is equipped with an occupant detection system in the front passenger's seat.

The occupant detection system is designed to detect the presence of a properly-seated front passenger and determine if the passenger's front air bag should be enabled (may inflate) or not. Only the front passenger front air bag is controlled by the Occupant Detection System.

Do not put anything in front of the passenger air bag indicator.

Main components of the occupant detection system

- A detection device located within the front passenger seat cushion.
- An electronic system which determines whether the passenger air bag systems should be activated or deactivated.
- An indicator light located on the instrument panel which illuminates the words PASSENGER AIR BAG "" indicates the front passenger air bag system is deactivated.
- The instrument panel air bag warning light is interconnected with the occupant detection system.

If the front passenger seat is occupied by a person that the system determines to be of appropriate size, and he/she sits properly (sitting upright with the seatback in an upright position, centered on the seat cushion with their seat belt on, legs comfortably extended and their feet on the floor), the PASSENGER AIR BAG "" indicator will turn off and the front passenger's air bag will be able to inflate, if necessary, in frontal crashes.

You will find the PASSENGER AIR BAG "" indicator on the center facia panel. This system detects the conditions 1~4 in the following table and activates or deactivates the front passenger air bag based on these conditions.

Always be sure that you and all vehicle occupants are seated and restrained properly (sitting upright with the seat in an upright position, centered on the seat cushion, with the person's legs comfortably extended, feet on the floor, and wearing the safety belt properly) for the most effective protection by the air bag and the safety belt.

- The ODS (Occupant Detection System) may not function properly if the passenger takes actions which can defeat the detection system. These include:

(1) Failing to sit in an upright position.

(2) Leaning against the door or center console.

(3) Sitting towards the sides or the front of the seat.

(4) Putting legs on the dashboard or resting them on other locations which reduce the passenger weight on the front seat.

(5) Improperly wearing the safety belt.

(6) Reclining the seat back.

Condition and operation in the front passenger occupant detection system

Condition detected by the occupant classification system	Indicator/Warning light		Devices
	"PASSENGER AIR BAG OFF" indicator light	SRS warning light	Front passenger air bag
1. Adult*1	Off	Off	Activated
2. Child restraint system with child under 12 months old *2 *3 *4	On	Off	Deactivated
3. Unoccupied	On	Off	Deactivated
4. Malfunction in the system	Off	On	Activated

*1 The system judges a person of adult size as an adult. When a smaller adult sits in the front passenger seat, the system may recognize him/her as a child depending on his/her physique and posture.

*2 Do not allow children to ride in the front passenger seat. When a larger child who has outgrown a child restraint system sits in the front passenger seat, the system may recognize him/her as an adult depending upon his/her physique or sitting position.

*3 Never install a child restraint system on the front passenger seat.

*4 The PASSENGER AIR BAG " " indicator may turn on or off when a child above 12 months to 13 years old (with or without child restraint system) sits in the front passenger seat. This is a normal condition.

⚠ CAUTION

- ***Do not install a child restraint seat in the passenger seat when the seat is heavily soaked with any type of liquid.***
- ***Do not alter or remodel the ODS (Occupant Detection System). This may damage the system and prevent its proper function in a collision.***

✻ NOTICE

- Do not use car seat cushions that cover up the surface of the seat and aftermarket manufactured passenger seat heaters.
- After conducting car interior cleaning using steam or detergent, the seat should be dried properly. Afterward, check for normal operation of the PASS AIR BAG " " and air bag warning lights.
- Any service related to the passenger seat and the ODS must be done at Kia service center.
- After the passenger seat has been removed or installed for repair purposes, check for normal operation of the PASS AIR BAG " " and air bag warning lights with a person seated or not seated in the passenger seat.

⚠ WARNING - ODS system

Riding in an improper position or placing items on or under the passenger seat may interfere with the normal operation of the ODS (Occupant Detection System). It is important for the driver to instruct the passenger as to the proper seating instructions as contained in this manual.

✻ NOTICE

When the PASS AIR BAG " " symbol is illuminated, the passenger air bag system will not operate. The passenger air bag system will operate when necessary if the symbol is not illuminated.

✻ NOTICE

Do not modify or replace the front passenger seat. Don't place anything on or attach anything such as a blanket, front seat cover or after market seat heater to the front passenger seat. This can adversely affect the occupant detection system.

⚠ WARNING - ODS System

Riding in an improper position adversely affects the Occupant Detection System and may result in the deactivation of the front passenger airbag. It is important for the driver to instruct the passenger as to the proper seating instructions as contained in this manual.

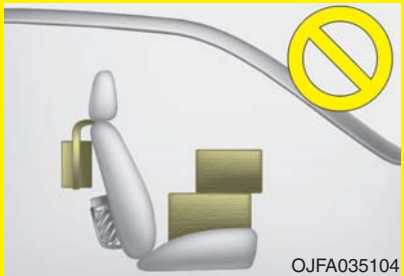

- **Do not place a heavy load in the front passenger seatback pocket or on the front passenger seat.**

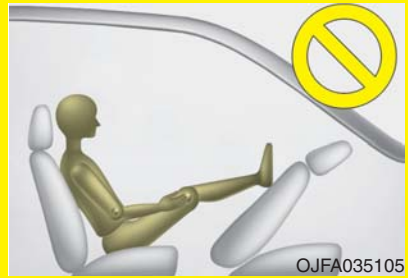

- **Do not place feet on the front passenger seatback.**

- **Never sit with hips shifted towards the front of the seat.**

(Continued)

(Continued)

- **Never excessively recline the front passenger seatback.**

- **Never place feet on the dashboard.**

- **Never lean on the door or center console.**
- **Never sit on one side of the front passenger seat.**

(Continued)

(Continued)

- **Do not use car seat accessories such as thick blankets and cushions which cover up the car seat surface.**
- **Do not sit on the passenger seat wearing heavily padded clothes such as ski wear and hip protector.**

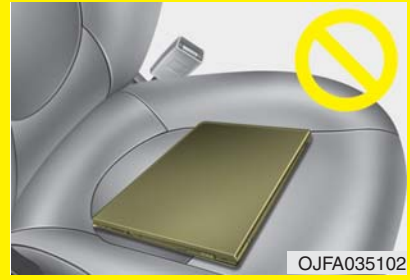

- **Do not place electronic devices such as laptops, DVD player, or conductive materials such as water bottles on the passenger seat.**
- **Do not use electronic devices such as laptops and satellite radios which use inverter chargers.**

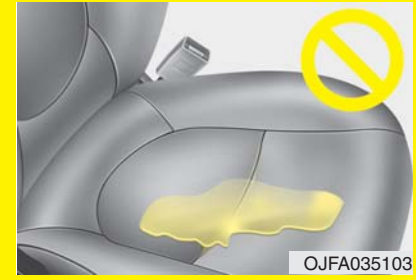

- Wet Passenger Seat

Do not spill liquid on the passenger seat. Spilled liquid on the passenger seat may cause the air bag warning light to illuminate or malfunction. If any liquid is spilled, make sure the seat has been completely dried before driving the vehicle.

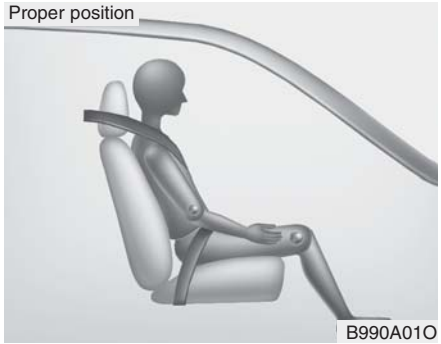

When an adult is seated in the front passenger seat, if the PASSENGER AIR BAG "" indicator is on, change Engine Start/Stop button to the OFF position and ask the passenger to sit properly (sitting upright with the seat back in an upright position, centered on the seat cushion with their seat belt on, legs comfortably extended and their feet on the floor). Restart the engine and have the person remain in that position. This will allow the system to detect the person and to enable the passenger air bag.

If the PASSENGER AIR BAG "" indicator is still on, ask the passenger to move to the rear seat.

⚠ WARNING - "AIR BAG OFF" light

Do not allow an adult passenger to ride in the front seat when the PASSENGER AIR BAG "" indicator is illuminated, because the air bag will not deploy in the event of a crash. The driver must instruct the passenger to reposition himself in the seat. Failure to properly position yourself may lead to air bag deactivation resulting in air bag non-deployment in a collision. If the PASSENGER AIR BAG "" indicator remains illuminated after the passenger repositions themselves properly and the car is restarted, it is recommended that the passenger move to the rear seat because the passenger's front air bag will not deploy.

✻ NOTICE

The PASSENGER AIR BAG "" indicator illuminates for about 4 seconds after Engine Start/Stop button is turned to the ON position after the engine is started. If the front passenger seat is occupied, the occupant detection sensor will then classify the front passenger after several more seconds.

- Even though your vehicle is equipped with the occupant detection system, never install a child restraint system in the front passenger's seat. A deploying air bag can forcefully strike a child resulting in serious injuries or death. Any child age 13 and under should ride in the rear seat. Children too large for child restraints should use the available lap/shoulder belts. No matter what type of crash, children of all ages are safer when restrained in the rear seat.
- If the PASSENGER AIR BAG " " indicator is illuminated when the front passenger's seat is occupied by an adult and he/she sits properly (sitting upright with the seatback in an upright position, centered on the seat cushion with their seat belt on, legs comfortably extended and their feet on the floor), have that person sit in the rear seat. Any child age 13 and under should ride in the rear seat. Children too large for child restraints should use the available lap/shoulder belts. No matter what type of crash, children of all ages are safer when restrained in the rear seat.

If the occupant detection system is not working properly, the SRS air bag warning light on the instrument panel will illuminate because the passenger's front air bag is connected with the occupant detection system. If there is a malfunction of the occupant detection system, the PASSENGER AIR BAG " " indicator will not illuminate and the passenger's front air bag will inflate in frontal impact crashes even if there is no occupant in the front passenger's seat.

Driver's and passenger's front air bag

■ Driver's front air bag

ODE036037

■ Driver's knee air bag

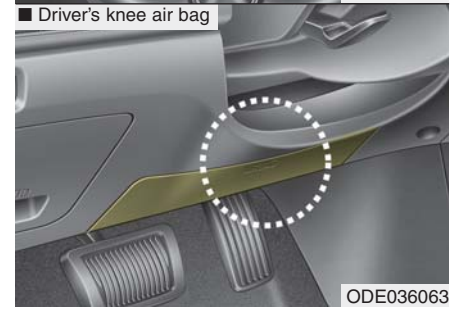

ODE036063

■ Passenger's front air bag

Your vehicle is equipped with an Advanced Supplemental Restraint (Air Bag) System and lap/shoulder belts at both the driver and passenger seating position.

The indication of the system's presence are the letters "AIR BAG" located on the air bag pad cover on the steering wheel and the passenger's side front panel pad above the glove box.

The SRS consists of air bags installed under the pad covers in the center of the steering wheel and the passenger's side front panel above the glove box.

The purpose of the SRS is to provide the vehicle's driver and/or the front passenger with additional protection than that offered by the seat belt system alone in case of a frontal impact of sufficient severity. The SRS uses sensors to gather information about the driver's and front passenger's seat belt usage and impact severity.

The seat belt buckle sensor determines if the front passenger's seat belt is fastened.

These sensors provide the ability to control the SRS deployment based on whether or not the seat belts are fastened, and how severe the impact is.

The advanced SRS offers the ability to control the air bag inflation with two levels. A first stage level is provided for moderate-severity impacts. A second stage level is provided for more severe impacts.

The passenger's front air bag is designed to help reduce the injury of children sitting close to the instrument panel in low speed collisions. However, children are safer if they are restrained in the rear seat.

According to the impact severity and seat belt usage, the SRSCM (SRS Control Module) controls the air bag inflation. Failure to properly wear seat belts can increase the risk or severity of injury in an accident.

Additionally, your vehicle is equipped with an occupant detection system in the front passenger's seat. The occupant detection system detects the presence of a passenger in the front passenger's seat and will turn off the front passenger's air bag under certain conditions. For more detail, see "Occupant detection system" in this chapter.

Modification to the seat structure can cause the air bag to deploy at a different level than should be provided.

Manufacturers are required by government regulations to provide a contact point concerning modifications to the vehicle for persons with disabilities, which modifications may affect the vehicle's advanced air bag system. That contact is Kia's toll-free Customer Experience Department at 1-877-KIA-AUTO (1-877-542-2886). However, Kia does not endorse nor will it support any changes to any part or structure of the vehicle that could affect the advanced air bag system, including the occupant detection system.

⚠ WARNING - Replacement / modifications

The front passenger seat, dashboard or door should not be replaced except by an authorized Kia dealer using original Kia parts designed for this vehicle and model. Any other such replacement or modification could adversely affect the operation of the occupant detection system and your advanced air bags.

Advanced air bags are combined with pre-tensioner seat belts to help provide enhanced occupant protection in frontal crashes. Front air bags are not intended to deploy in collisions in which sufficient protection can be provided by the pre-tensioner seat belt.

✻ NOTICE

Air bags can only be used once – have an authorized Kia dealer replace the air bag immediately after deployment.

Front air bags are not intended to deploy in side-impact, rear-impact or rollover crashes. However, when frontal deployment threshold is satisfied at side-impact, front air bags may deploy. In addition, front air bags will not deploy in frontal crashes below the deployment threshold.

⚠ WARNING - SRS Wiring

Do not tamper with or disconnect SRS wiring or other components of the SRS system. Doing so could result in injury, due to accidental deployment of the air bags or by rendering the SRS inoperative.

⚠ WARNING - No attaching objects

No objects (such as crash pad cover, cellular phone holder, cup holder, perfume or stickers) should be placed over or near the air bag modules on the steering wheel, instrument panel, windshield glass, and the front passenger's panel above the glove box. Such objects could cause harm if the vehicle is in a crash severe enough to cause the air bags to deploy.

Do not place any objects over the air bag or between the air bag and yourself.

Side air bag

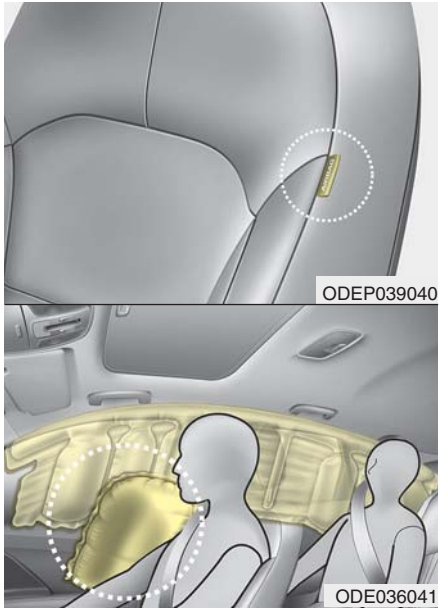

❊ The actual air bags in the vehicle may differ from the illustration.

Your vehicle is equipped with a side air bag in each front seat.

The purpose of the air bag is to provide the vehicle's driver and/or the front passenger with additional protection than that offered by the seat belt alone.

- The side air bags are designed to deploy during certain side-impact collisions, depending on the crash severity, angle, speed and point of impact. However, when side deployment threshold is satisfied at front-impact, side air bags may deploy.
- The side air bags may deploy on the side of the impact or on both sides.
- The side and/or curtain air bags on both sides of the vehicle will deploy if a rollover or possible rollover is detected.
- The side air bags are not designed to deploy in all side impact or rollover situations.

⚠ WARNING - Unexpected deployment

Avoid impact to the side impact airbag sensor when Engine Start/Stop button is ON to prevent unexpected deployment of the side air bag.

- The side air bag is supplemental to the driver's and the passenger's seat belt systems and is not a substitute for them. Therefore your seat belts must be worn at all times while the vehicle is in operation.
- For best protection from the side air bag system and to avoid being injured by the deploying side air bag, both front seat occupants should sit in an upright position with the seat belt properly fastened. The driver's hands should be placed on the steering wheel at the 9:00 and 3:00 positions. The passenger's arms and hands should be placed on their laps.

⚠ WARNING - Deployment

Do not install any accessories including seat covers, on the side or near the side air bag as this may affect the deployment of the side air bags.

- If seat or seat cover is damaged, have the vehicle checked and repaired by an authorized Kia dealer. Inform the dealer that your vehicle is equipped with side air bags and an occupant detection system.

⚠ WARNING - Flying objects

Do not place any objects (an umbrella, bag, etc.) between the front door and the front seat. Such objects may become dangerous projectiles if the side airbag inflates.

⚠ WARNING - No attaching objects

- **Do not place any objects over the air bag or between the air bag and yourself. Also, do not attach any objects around the area the air bag inflates such as the door, side door glass, front and rear pillar.**
- **Do not put any objects between the side airbag label and seat cushion. It could cause harm if the vehicle is in a crash severe enough to cause the air bags to deploy.**
- **Never place or insert any object into any small opening near side airbag labels attached to the vehicle seats. When the air bag deploys, the object may affect the deployment and result in unexpected accident or bodily harm.**
- **Do not install any accessories on the side or near the side air bags.**

Curtain air bag

❊ The actual air bags in the vehicle may differ from the illustration.

Curtain air bags are located along both sides of the roof rails above the front and rear doors.

They are designed to help protect occupants in certain side impacts and to help prevent them from ejecting out of the vehicle as a result of a rollover, especially when the seatbelts are also in use.

- The curtain air bags are designed to deploy during certain side impact collisions, depending on the crash severity, angle, speed and point of impact. However, when side deployment threshold is satisfied at front-impact, side air bags may deploy.
- The curtain air bags may deploy on the side of the impact or on both sides.
- Also, the curtain air bags on both sides of the vehicle will deploy in certain rollover situations.
- The curtain air bags are not designed to deploy in all side impact or rollover situations.

Do not allow the passengers to lean their heads or bodies against the doors, put their arms on the doors, stretch their arms out of the window or place objects between the doors and passengers when they are seated on seats equipped with side impact and/or curtain air bags.

✻ NOTICE

Never try to open or repair any components of the side and curtain air bag system. This should only be done by an authorized Kia dealer.

⚠ WARNING - No attaching objects

- **Do not place any objects over the air bag. Also, do not attach any objects around the area the air bag inflates such as the door, side door glass, front and rear pillar, roof side rail.**
- **Do not hang hard, breakable, or heavy objects on the coat hooks for safety reasons.**

Why didn't my air bag go off in a collision? (Inflation and non-inflation conditions of the air bag)

There are many types of accidents in which the air bag would not be expected to provide additional protection.

These include rear impacts, second or third collisions in multiple impact accidents, as well as low speed impacts.

Air bag collision sensors

ODEP039044/ODE036045/ODEP039046/ODE036047/ODE036048

(1) SRS control module/ Rollover sensor

(2) Front impact sensor

(3) Side pressure sensor

(4) Side impact sensor

❊ The actual shape and position of sensors may differ from the illustration.

⚠ WARNING - Air bag sensors

- **Do not hit or allow any objects to impact the locations where air bags or sensors are installed.**

  This may cause unexpected air bag deployment, which could result in serious personal injury or death.
- **If the installation location or angle of the sensors is altered in any way, the air bags may deploy when they should not or they may not deploy when they should.**

  Therefore, do not try to perform maintenance on or around the air bag sensors. Have the vehicle checked and repaired by an authorized Kia dealer.

Problems may arise if the sensor installation angles are changed due to the deformation of the front bumper, front end module, body or front doors where side collision sensors are installed. Have the vehicle checked and repaired by an authorized Kia dealer.

Installing bumper guards (or side step or running board) or replacing a bumper (or front door module) with non-genuine parts may adversely affect your vehicle's collision and air bag deployment performance.

Air bag inflation conditions

Front air bags

Front air bags are designed to inflate in a frontal collision depending on the severity of impact of the front collision.

Side and/or curtain air bags

Side and/or curtain air bags are designed to inflate when an impact is detected by side collision sensors depending on the severity of impact resulting from a side impact collision.

Also, the side and curtain air bags are designed to inflate when a rollover is detected by a rollover sensor.

Although the front air bags (driver's and front passenger's air bags) are designed to inflate in frontal collisions, they also may inflate in other types of collisions if the front impact sensors detect a sufficient frontal force in another type of impact. Side and curtain air bags are designed to inflate in certain side impact collisions.

They may inflate in other types of collisions where a side force is detected by the sensors. Side air bag and/or curtain air bags may also inflate where rollover sensors indicate the possibility of a rollover occurring (even if none actually occurs) or in other situations, including when the vehicle is tilted while being towed.

Even where side and/or curtain air bags would not provide impact protection in a rollover, however, they will deploy to prevent ejection of occupants, especially those who are restrained with seat belts.

If the vehicle chassis is impacted by bumps or objects on unimproved roads, the air bags may deploy. Drive carefully on unimproved roads or on surfaces not designed for vehicle traffic to prevent unintended air bag deployment.

Air bag non-inflation conditions

- In certain low-speed collisions the air bags may not deploy. The air bags are designed not to deploy in such cases because they may not provide benefits beyond the protection of the seat belts in such collisions.
- Air bags are not designed to inflate in rear collisions, because occupants are moved backward by the force of the impact. In this case, inflated air bags would not be able to provide any additional benefit.
- Front air bags may not inflate in side impact collisions, because occupants move to the direction of the collision, and thus in side impacts, frontal air bag deployment would not provide additional occupant protection.
- In an angled collision, the force of impact may direct the occupants in a direction where the air bags would not be able to provide any additional benefit, and thus the sensors may not deploy any air bags.
- Just before impact, drivers often brake heavily. Such heavy braking lowers the front portion of the vehicle causing it to “ride” under a vehicle with a higher ground clearance. Air bags may not inflate in this "under-ride" situation because deceleration forces that are detected by sensors may be significantly reduced by such “under-ride” collisions.
- Front air bags may not inflate in all rollover accidents where the SRSCM indicates that the front air bag deployment would not provide additional occupant protection.
- Air bags may not inflate if the vehicle collides with objects such as utility poles or trees, where the point of impact is concentrated to one area and the full force of the impact is not delivered to the sensors.

SRS Care

The SRS is virtually maintenance-free and so there are no parts you can safely service by yourself. If the SRS air bag warning light does not illuminate, or continuously remains on, have your vehicle immediately inspected by an authorized Kia dealer.

Any work on the SRS system, such as removing, installing, repairing, or any work on the steering wheel, the front passenger's panel, front seats and roof rails must be performed by an authorized Kia dealer. Improper handling of the SRS system may result in serious personal injury.

For cleaning the air bag pad covers, use only a soft, dry cloth or one which has been moistened with plain water. Solvents or cleaners could adversely affect the air bag covers and proper deployment of the system.

If components of the air bag system must be discarded, or if the vehicle must be scrapped, certain safety precautions must be observed. An authorized Kia dealer knows these precautions and can give you the necessary information. Failure to follow these precautions and procedures could increase the risk of personal injury.

⚠ WARNING - Tampering with SRS

Do not tamper with or disconnect SRS wiring, or other components of the SRS system. Doing so could result in the accidental inflation of the air bags or render the SRS inoperative.

⚠ WARNING - Towing Vehicle

Always have the ignition off when your vehicle is being towed. The side air bags may inflate if the vehicle is tilted such as when being towed because of the rollover sensors in the vehicle.

Adding equipment to or modifying your air bag-equipped vehicle

If you modify your vehicle by changing your vehicle's frame, bumper system, front end or side sheet metal or ride height, this may affect the operation of your vehicle's air bag system.

Air bag warning label

Air bag warning labels, some required by the Canada Motor Vehicle Safety Standards (CMVSS), are attached to the sunvisor to alert the driver and passengers of potential risks of the air bag system.

Features of your vehicle

Folding key 4-4
- Record your key number 4-4
- Key operations 4-4
- Transmitter precautions 4-6
- Battery replacement 4-7
- Immobilizer system 4-8
- Limp home (override) procedure 4-10

Smart key 4-11
- Record your key number 4-11
- Smart key function 4-11
- Mechanical key 4-14
- Loss of the smart key 4-14
- Smart key precautions 4-14
- Battery replacement 4-15
- Smart key immobilizer system 4-16

Theft-alarm system 4-18
- Armed stage 4-18
- Theft-alarm stage 4-19
- Disarmed stage 4-20

Door locks 4-21
- Operating door locks from outside the vehicle 4-21
- Operating door locks from inside the vehicle 4-22
- Child-protector rear door lock 4-25

Liftgate 4-26
- Opening the liftgate 4-26
- Closing the liftgate 4-26
- Emergency liftgate safety release 4-27

Windows 4-29
- Power windows 4-30

Hood 4-34
- Opening the hood 4-34
- Closing the hood 4-35

Fuel filler door (Hybrid) 4-36
- Opening the fuel filler door 4-36
- Closing the fuel filler door 4-37

Fuel filler door (Plug-in hybrid) 4-38
- Opening the fuel filler door 4-38
- Closing the fuel filler door 4-39

Sunroof 4-42
- Sliding the sunroof 4-43
- Tilting the sunroof 4-44
- Sunshade 4-45
- Resetting the sunroof 4-45
- Sunroof open warning 4-46

Steering wheel 4-47
- Electric Power Steering (EPS) 4-47
- Tilt and telescopic steering 4-48
- Heated steering wheel 4-49
- Horn 4-50

Mirrors 4-51
• Inside rearview mirror 4-51
• Outside rearview mirror. 4-62
Instrument cluster 4-66
• Instrument cluster control 4-68
• Gauges 4-68
• Dual clutch transmission shift indicator. 4-74
LCD display 4-76
• LCD display control 4-76
• LCD display modes 4-77
• Trip modes (Trip computer). 4-89
• Warning messages 4-94
Warning and indicator lights 4-105
• Warning lights 4-105
• Indicator lights. 4-114
Rear View Monitor (RVM) 4-120
Reverse Parking Distance Warning (PDW). . . . 4-121
• Operation of Reverse Parking Distance Warning system 4-121
• Non-operational conditions of Reverse Parking Distance Warning system 4-122
• Reverse Parking Distance Warning system precautions. 4-123
• Self-diagnosis 4-123
Forward/Reverse Parking Distance Warning (PDW) 4-124
• Operation of Parking Distance Warning system . . 4-125
• Non-operational conditions of Forward/ Reverse Parking Distance Warning system 4-127
• Self-diagnosis 4-128
Lighting 4-129
• Battery saver function. 4-129
• Headlight escort function 4-129
• Daytime running light (DRL). 4-129
• Lighting control 4-130
• High beam operation. 4-131
• High Beam Assist (HBA) 4-132
• Turn signals and lane change signals 4-134
• Check headlight. 4-135
• Front fog light 4-135
Wipers and washers. 4-136
• Windshield wipers. 4-136
• Front windshield washers. 4-137
• Rear window wiper and washer switch 4-138
Interior lights 4-140
• Automatic turn off function 4-140
• Map lamp 4-140
• Room lamp. 4-141

• Liftgate room lamp 4-142
• Vanity mirror lamp 4-142
Welcome system 4-143
• Headlight (Headlamp) escort function 4-143
• Interior light. 4-143
• Pocket lamp 4-143
Defroster 4-144
• Rear window defroster 4-144
Automatic climate control system. 4-145
• Automatic heating and air conditioning 4-146
• Manual heating and air conditioning 4-148
• System operation 4-154
• Automatic ventilation 4-156
• Sunroof inside air recirculation 4-157
• Recirculated air at washer fluid spray 4-157
• Climate control air filter. 4-158
• Checking the amount of air conditioner refrigerant and compressor lubricant. 4-159
Windshield defrosting and defogging. 4-160
• Automatic climate control system 4-160
• Defogging logic. 4-161
Storage compartments. 4-164
• Center console storage 4-164
• Glove box 4-164
• Sunglass holder 4-165
• Luggage box. 4-166
Interior features 4-167
• Cup holder 4-167
• Seat warmer. 4-167
• Air ventilation seat 4-169
• Sunvisor 4-170
• Power outlet 4-170
• USB charger. 4-171
• AC inverter. 4-172
• Wireless smart phone charging system. 4-173
• Clothes hanger. 4-177
• Floor mat anchor(s). 4-177
• Luggage net holder 4-178
• Cargo security screen 4-179
Exterior features. 4-180
• Roof rack 4-180
Infotainment system. 4-182
• Antenna 4-182
• USB port. 4-182
• How vehicle radio works 4-183
Declaration of Conformity 4-186
• IC 4-186

FOLDING KEY (IF EQUIPPED)

Record your key number

The key code number is stamped on the key code tag attached to the key set. Should you lose your keys, this number will enable an authorized Kia dealer to duplicate the keys easily. Remove the key code tag and store it in a safe place. Also, record the key code number and keep it in a safe place, but not in the vehicle.

Key operations

OBD048028

- Used to start the engine.
- Used to lock and unlock the doors.
- To unfold the key, press the release button then the key will unfold automatically. To fold the key, fold the key manually while pressing the release button.

⚠ CAUTION

Do not fold the key without pressing the release button. This may damage the key.

⚠ WARNING - Aftermarket key

Use only Kia original parts for the ignition key in your vehicle. If an aftermarket key is used, the ignition switch may not return to ON after START. If this happens, the starter will continue to operate causing damage to the starter motor and possible fire due to excessive current in the wiring.

⚠ WARNING - Ignition key (smart key)

Never leave the keys in your vehicle with unsupervised children. Leaving children unattended in a vehicle with a manual ignition key or a smart key is dangerous. Children copy adults and they could place the key in the ignition switch or press the start button. The key would enable children to operate power windows or other controls, or even make the vehicle move, which could result in serious bodily injury or death.

OBD048030

Door Lock (1)

1. Close all doors, engine hood and liftgate.
2. Press the lock button(1).
3. All doors and liftgate will lock. The hazard warning lights will blink once.
4. If the lock button is pressed once more within 4 seconds, the hazard warning lights will blink and the horn will sound once.
5. Make sure that doors are locked by checking the door lock button inside or pulling the outside door handle.

Door Unlock (2)

1. Press the unlock button(2).
2. The driver's door will unlock. The hazard warning lights will blink two times.
3. Press the unlock button(2) twice within 4 seconds and all doors and liftgate will unlock. The hazard warning lights will blink two times.

✻ NOTICE

You can active or deactivate the Two Press Unlock function from the User Settings mode in the LCD display. Refer to "User Settings" in this chapter.

Liftgate unlock (3)

The liftgate is unlocked if the button is pressed for more than 1 second.

Also, once the liftgate is opened and then closed, the liftgate will be locked automatically.

Panic (4)

The horn sounds and hazard warning lights flash for about 27 seconds if this button is pressed for more than 0.5 seconds. To stop the horn and lights, press any button on the transmitter.

Transmitter precautions

- The transmitter will not work if any of following occur:
  - The ignition key is in the ignition switch.
  - You exceed the operating distance limit (about 10 m [30 feet]).
  - The battery in the transmitter is weak.
  - Other vehicles or objects are blocking the signal.
  - The weather is extremely cold.
  - The transmitter is close to a radio transmitter such as a radio substation or an airport which can interfere with normal operation of the transmitter.

- When the transmitter does not work correctly, open and close the door with the ignition key. If you have a problem with the transmitter, contact an authorized Kia dealer.
- If the transmitter is in close proximity to your mobile phone, the signal could be blocked by your mobile phones normal operational signals. This is especially important when the phone is active such as making and receiving calls, text messaging, and/or sending/receiving emails. Avoid placing the transmitter and your mobile phone in the same pants or jacket pocket and always try to maintain an adequate distance between the two devices.

⚠ CAUTION - Transmitter

Keep the transmitter away from water or any liquid as it can become damaged and not function properly if wet.

✻ NOTICE

If the keyless entry system is inoperative due to exposure to water or liquids, it will not be covered by your manufacturer's vehicle warranty.

Battery replacement

The transmitter uses a 3 volt lithium battery which will normally last for several years. When replacement is necessary, use the following procedure.

1. Insert a slim tool into the slot and gently pry open the transmitter center cover.
2. Replace the battery with a new battery (CR2032). When replacing the battery, make sure the battery is positioned correctly.
3. Install the battery in the reverse order of removal.

For replacement transmitters, see an authorized Kia dealer for transmitter reprogramming.

- The transmitter is designed to give you years of trouble-free use. However, it can malfunction if exposed to moisture or static electricity. If you are unsure how to use your transmitter or replace the battery, contact an authorized Kia dealer.
- Using the wrong battery can cause the transmitter to malfunction. Be sure to use the correct battery.
- To avoid damaging the transmitter, don't drop it, get it wet, or expose it to heat or sunlight.
- An inappropriately disposed battery can be harmful to the environment and may cause harm to human health. Dispose the battery according to your local law(s) or regulation.

⚠ CAUTION - Transmitter damage

Do not drop, wet or expose the keyless entry system transmitter to heat or sunlight.

⚠ IC WARNING

This device complies with Industry Canada licence-exempt RSS standard(s).

Operation is subject to the following two conditions: (1) this device may not cause interference, and (2) this device must accept any interference, including interference that may cause undesired operation of the device.

Immobilizer system

Your vehicle is equipped with an electronic engine immobilizer system to reduce the risk of unauthorized vehicle use.

Your immobilizer system is comprised of a small transponder in the ignition key and electronic devices inside the vehicle.

With the immobilizer system, whenever you insert your ignition key into the ignition switch and turn it to ON, verifies if the ignition key is valid.

If the key is determined to be valid, the engine will start.

If the key is determined to be invalid, the engine will not start.

To activate the immobilizer system:

Turn the ignition key to the OFF position. The immobilizer system activates automatically. Without a valid ignition key for your vehicle, the engine will not start.

To deactivate the immobilizer system:

Insert the ignition key into the key cylinder and turn it to the ON position.

In order to prevent theft of your vehicle, do not leave spare keys anywhere in your vehicle. Your Immobilizer password is a customer unique password and should be kept confidential. Do not leave this number anywhere in your vehicle.

✻ NOTICE

When starting the engine, do not use the key with other immobilizer keys around. Otherwise the engine may not start or may stop soon after it starts. Keep each key separate in order to avoid a starting malfunction.

Do not put metal accessories near the ignition switch.

Metal accessories may interrupt the transponder signal and may prevent the engine from being started.

✻ NOTICE

If you need additional keys or lose your keys, contact an authorized Kia dealer.

⚠ CAUTION - Immobilizer damage

Do not expose your immobilizer system to moisture, static electricity or rough handling. This may damage your immobilizer.

⚠ CAUTION - Immobilizer alterations

Do not change, alter or adjust the immobilizer system because it could cause the immobilizer system to malfunction.

This device complies with Industry Canada licence-exempt RSS standard(s).

Operation is subject to the following two conditions:

(1) This device may not cause interference, and

(2) This device must accept any interference, including interference that may cause undesired operation of the device.

✻ NOTICE

Changes or modifications not expressly approved by the party responsible for compliance could void the user's authority to operate the equipment. If the keyless entry system is inoperative due to changes or modifications not approved by the party responsible for compliance, it will not be covered by your manufacturer's vehicle warranty.

Limp home (override) procedure

When you turn the ignition switch to the ON position, if the immobilizer indicator ( ) goes off after blinking 5 times, your transponder equipped in the ignition key is out of order. You cannot start the engine without the limp home procedure. To start the engine, you have to input your password by using the ignition switch. Your password is only available from an authorized Kia dealership. Contact an authorized dealer for more information.

The following procedure is how to input your password of "2345" as an example.

1. Turn the ignition switch to the ON position. The immobilizer indicator ( ) will blink 5 times and go off indicating the beginning of the limp home procedure.
2. Turn the ignition switch to the ACC position.
3. To enter the first digit (in this example "2"), turn the ignition switch to the ON and ACC position twice. Perform the same procedure for the next digits between 3 seconds and 10 seconds (for example, for "3", turn the ignition ON and ACC 3 times).
4. If all of the digits have been input successfully, you have to start the engine within 30 seconds. If you attempt to start the engine after 30 seconds, the engine will not start and you will have to input your password again.

After performing the limp home procedure, you have to see an authorized Kia dealer immediately to inspect and repair your ignition key or immobilizer system.

SMART KEY (IF EQUIPPED)

Record your key number

The key code number is stamped on the bar code tag attached to the key set. Should you lose your keys, this number will enable an authorized Kia dealer to duplicate the keys easily. Remove the bar code tag and store it in a safe place. Also, record the code number and keep it in a safe and handy place, but not in the vehicle.

⚠ WARNING - Smart key

Never leave the keys in your vehicle with unsupervised children. Leaving children unattended in a vehicle with a manual a smart key is dangerous. Children copy adults and they could press the start button. The key would enable children to operate power windows or other controls, or even make the vehicle move, which could result in serious bodily injury or death.

Smart key function

With a smart key, you can lock or unlock a door (and liftgate) and start the engine.

Refer to the following for more details.

OBD048031

Locking (1)

Pressing the button of the front outside door handles with all doors (and liftgate) closed and any door unlocked, locks all the doors (and liftgate).

The hazard warning lights will blink once to indicate that all doors (and liftgate) are locked. The button will only operate when the smart key is within 0.7 ~ 1 m (28 ~ 40 in) from the outside door handle. If you want to make sure that a door has locked or not, you should check the door lock button inside the vehicle or pull the outside door handle.

Even though you press the button, the doors will not lock and an audible chime will sound if any of the following occurs:

- The smart key is in the vehicle.
- The ENGINE START/STOP button is in the ACC or ON position.
- Any door except the liftgate is opened.

Unlocking (2)

Pressing the button of the front outside door handles with all doors (and liftgate) closed and locked, unlocks all the doors (and liftgate). The hazard warning lights will blink twice to indicate that all doors (and liftgate) are unlocked. The button will only operate when the smart key is within 0.7 ~ 1 m (28 ~ 40 in) from the outside door handle.

When Two Press Unlock function is activated,

- If you press the Door Unlock button(2) on the smart key, driver’s door will unlock.
- If you press the Door Unlock button(2) on the smart key within four seconds again, then all the doors will unlock.
- If you press the driver's outside door handle button, driver’s door will unlock.
- If you press the driver's outside door handle button within four seconds again, then all the doors will unlock.

✻ NOTICE

You can active or deactivate the Two Press Unlock function from the User Settings mode in the LCD display. Refer to "User Settings" in this chapter.

Liftgate unlocking (3)

If you are within 0.7 ~ 1 m (28 ~ 40 in) from the outside liftgate handle, with your smart key in possession, the liftgate will unlock and open when you press the liftgate handle switch.

The hazard warning lights will blink twice to indicate that the liftgate is unlocked.

Also, once the liftgate is opened and then closed, the liftgate will lock automatically.

Panic (4)

1. Press the panic button (4) for more than 1 second.
2. The horn sounds and hazard warning light flash for about 27 seconds.

✻ NOTICE

To stop the horn and lights, press any button on the smart key.

Engine start

You can start the engine without inserting the key. For detailed information refer to the "ENGINE START/STOP button" in chapter 5.

Mechanical key

OBD048029

To remove the mechanical key, press and hold the release button (1) and remove the mechanical key (2).

To reinstall the mechanical key, put the key into the hole and push it until a click sound is heard.

Loss of the smart key

A maximum of 2 smart keys can be registered to a single vehicle.

If you happen to lose your smart key, you will not be able to start the engine. You should immediately take the vehicle and remaining key to your authorized Kia dealer (tow the vehicle, if necessary) to protect it from potential theft.

Smart key precautions

- The smart key will not work if any of the following occur:
  - The smart key is close to a radio transmitter such as a radio station or an airport which can interfere with normal operation of the smart key.
  - The smart key is near a mobile two way radio system or a cellular phone.
  - Another vehicle's smart key is being operated close to your vehicle.
- When the smart key does not work correctly, open and close the door with the mechanical key and contact an authorized Kia dealer.

- If the smart key is in close proximity to your cell phone or smart phone, the signal from the smart key could be blocked by normal operation of your cell phone or smart phone. This is especially important when the phone is active such as making a call, receiving calls, text messaging, and/or sending/receiving emails. Avoid placing the smart key and your cell phone or smart phone in the same pants or jacket pocket and maintain adequate distance between the two devices.

⚠ CAUTION - Transmitter

Keep the transmitter away from water or any liquid, as it can become damaged and not function properly if wet.

✻ NOTICE

If the keyless entry system is inoperative due to exposure to water or liquids, it will not be covered by your manufacturer's vehicle warranty.

Battery replacement

OBD048032

A smart key battery should last for several years, but if the smart key is not working properly, try replacing the battery with a new one. If you are unsure how to use your smart key or replace the battery, contact an authorized Kia dealer.

1. Remove the mechanical key.
2. Pry open the rear cover.
3. Replace the battery with a new battery (CR2032). When replacing the battery, make sure the battery is in the correct position.
4. Install the battery in the reverse order of removal.

- The smart key is designed to give you years of trouble-free use, however it can malfunction if exposed to moisture or static electricity. If you are unsure how to use or replace the battery, contact an authorized Kia dealer.
- Using the wrong battery can cause the smart key to malfunction. Be sure to use the correct battery.
- To avoid damaging the smart key, don't drop it, get it wet, or expose it to heat or sunlight.
- An inappropriately disposed battery can be harmful to the environment and human health. Dispose the battery according to your local law(s) or regulations.

⚠ CAUTION - Smart key damage

Do not drop, get wet or expose the smart key to heat or sunlight, or it will be damaged.

⚠ IC WARNING

This device complies with Industry Canada licence-exempt RSS standard(s).

Operation is subject to the following two conditions: (1) this device may not cause interference, and (2) this device must accept any interference, including interference that may cause undesired operation of the device.

Smart key immobilizer system

Your vehicle is equipped with an electronic engine immobilizer system to reduce the risk of unauthorized vehicle use.

Your immobilizer system is comprised of a small transponder in the smart key and electronic devices inside the vehicle.

With the immobilizer system, whenever you turn the ENGINE START/STOP button to the ON position by pressing the button while carrying the smart key, it verifies if the smart key is valid. If the key is determined to be valid, the engine will start.

If the key is determined to be invalid, the engine will not start.

✻ NOTICE

Do not put metal accessories near the ignition switch.
Metal accessories may interrupt the transponder signal and may prevent the engine from being started.

To deactivate the immobilizer system:

Turn the ENGINE START/STOP button to the ON position by pressing the button while carrying the smart key.

In order to prevent theft of your vehicle, do not leave spare keys anywhere in your vehicle.

To activate the immobilizer system:

Turn the ENGINE START/STOP button to the OFF position. The immobilizer system activates automatically. Without a valid smart key for your vehicle, the engine will not start.

✻ NOTICE

When starting the engine, do not use the key with other immobilizer keys around. Otherwise the engine may not start or may stop soon after it starts. Keep each key separate in order to avoid a starting malfunction.

✻ NOTICE

If you need additional keys or lose your keys, contact an authorized Kia dealer.

⚠ **CAUTION - Immobilizer damage**

Do not expose your immobilizer system to moisture, static electricity or rough handling. This may damage your immobilizer.

✻ **NOTICE - Immobilizer alterations**

Do not change, alter or adjust the immobilizer system because it could cause the immobilizer system to malfunction.

This device complies with Industry Canada licence-exempt RSS standard(s).

Operation is subject to the following two conditions:

(1) This device may not cause interference, and

(2) This device must accept any interference, including interference that may cause undesired operation of the device.

✻ **NOTICE**

Changes or modifications not expressly approved by the party responsible for compliance could void the user's authority to operate the equipment. If the keyless entry system is inoperative due to changes or modifications not expressly approved by the party responsible for compliance, it will not be covered by your manufacturer's vehicle warranty.

THEFT-ALARM SYSTEM

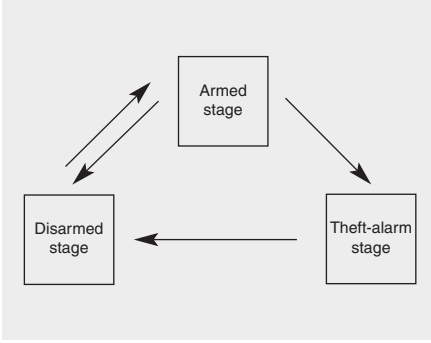

This system is designed to provide protection from unauthorized entry into the vehicle. This system is operated in three stages: the first is the “Armed” stage, the second is the “Theft-alarm” stage, and the third is the “Disarmed” stage. If triggered, the system provides an audible alarm with blinking of the hazard warning lights.

Armed stage

Park the vehicle and stop the engine. Arm the system as described below.

Using the folding key

1. Turn off the engine and remove the ignition key from the ignition switch.
2. Make sure that all doors, the engine hood and liftgate are closed and latched.
3. Lock the doors by pressing the lock button on the transmitter.

   After completion of the steps above, the hazard warning lights will blink once to indicate that the system is armed.

   If the liftgate or engine hood remains opened, the hazard warning lights will not operate and theft-alarm will not arm. After this, if the liftgate and engine hood are closed, the hazard warning lights will blink once and the theft-alarm will arm.

Using the smart key

1. Turn off the engine.
2. Make sure that all doors, the engine hood and liftgate are closed and latched.
3. • Lock the doors by pressing the button of the front outside door handle with the smart key in your possession.

   After completion of the steps above, the hazard warning lights will operate once to indicate that the system is armed.

   If the liftgate or engine hood remains opened, the hazard warning lights will not operate and theft-alarm will not arm. After this, if the liftgate and engine hood are closed, the hazard warning lights will blink once and the theft-alarm will arm.

- Lock the doors by pressing the lock button on the smart key.

  After completion of the steps above, the hazard warning lights will operate once to indicate that the system is armed.

  If the liftgate or engine hood remains opened, the hazard warning lights will not operate and theft-alarm will not arm. After this, if the liftgate and engine hood are closed, the hazard warning lights will blink once and the theft-alarm will arm.

Do not arm the system until all passengers have left the vehicle. If the system is armed while a passenger(s) remains in the vehicle, the alarm may be activated when the remaining passenger(s) leaves the vehicle. If any door (or liftgate) or engine hood is opened within 30 seconds after the system enters the armed stage, the system will be disarmed to prevent unnecessary alarm.

Theft-alarm stage

The alarm will be activated if any of the following occurs while the system is armed.

- A front or rear door is opened without using the transmitter (or smart key).
- The liftgate is opened without using the transmitter (or smart key).
- The engine hood is opened.

The horn will sound and the hazard warning lights will blink continuously for approximately 27 seconds. To turn off the system, unlock the doors with the transmitter (or smart key).

Disarmed stage

The system will be disarmed when:

Folding key

- The door unlock button is pressed.
- The engine is started. (within 3 seconds)
- The ignition switch is in the “ON” position for 30 seconds or more.

Smart key

- The door unlock button is pressed.
- The button of the front outside door is pressed while carrying the smart key.
- The engine is started. (within 3 seconds)

After the doors are unlocked, the hazard warning lights will blink twice to indicate that the system is disarmed.

After pressing the unlock button, if any door (or liftgate) is not opened within 30 seconds, the system will be rearmed.

✻ NOTICE

- **Without smart key system**
  If the system is not disarmed with the transmitter, insert the key into the ignition switch and start the engine. Then the system will be disarmed.
- **With smart key system**
  If the system is not disarmed with the smart key, open the door with the mechanical key and start the engine. Then the system will be disarmed.
- **If you lose your keys, Kia recommends to visit an authorized Kia dealer/service partner.**

⚠ CAUTION

Do not change, alter or adjust the theft-alarm system because it could cause the theft-alarm system to malfunction have the system serviced by a professional workshop. Kia recommends to visit an authorized Kia dealer/service partner.

Malfunctions caused by improper alterations, adjustments or modifications to the theft-alarm system are not covered by your vehicle manufacturer warranty.

DOOR LOCKS

Operating door locks from outside the vehicle

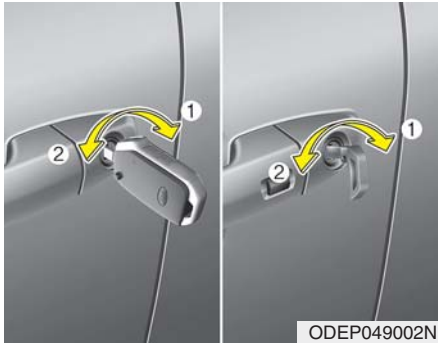

ODEP049002N

- Turn the key clockwise (1) to lock and counterclockwise (2) to unlock.
- If you lock the driver's door with a key, if you lock/unlock the driver's door with a key, only the driver's door will lock/unlock.
- Doors can also be locked and unlocked with the transmitter (or smart key).
- Once the doors are unlocked, they may be opened by pulling the door handle.
- When closing the door, push the door by hand. Make sure the doors are closed securely.

✻ NOTICE

- **In cold and wet climates, door lock and door mechanisms may not work properly due to freezing conditions.**
- **If the door is locked/unlocked multiple times in rapid succession with either the vehicle key or door lock switch, the system may stop operating temporarily in order to protect the circuit and prevent damage to system components.**

⚠ WARNING

- **Securely close your door before you begin driving. Failure to fully close your door may cause it to open during vehicle operation.**
- **Keep your body out of the way of the closing door to prevent injuries.**

⚠ CAUTION

Do not unnecessarily open and close the door repeatedly or with excessive force. Such action can damage the vehicle door.

⚠ WARNING

If adult passengers must remain in the vehicle while it is very hot or cold outside, there is risk of injuries or danger to life. Do not lock the vehicle from the outside when there are adult passengers in the vehicle.

✻ NOTICE

Always turn off the engine, engage the parking brake, close all windows, and lock all doors when leaving your vehicle unattended.

Operating door locks from inside the vehicle

With the door lock button

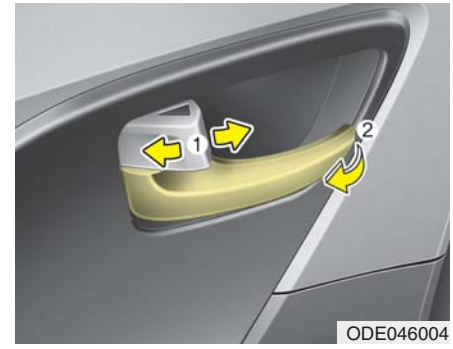

- To unlock a door, pull the door lock button (1) to the “Unlock” position. The red mark on the button will be visible.
- To lock a door, push the door lock button (1) to the “Lock” position. If the door is locked properly, the red mark on the door lock button will not be visible.
- To open a door, pull the door handle (2) outward.

- If the inner door handle of the driver's (or front passenger's) door is pulled when the door lock button is in the lock position, the button will unlock and the door will open.
- Doors cannot be locked if the smart key is in the vehicle and a door is open.

If a power door lock ever fails to function while you are in the vehicle, try one or more of the following techniques to exit:

- Operate the door unlock feature repeatedly (both electronic and manual) while simultaneously pulling on the door handle.
- Operate the other door locks and handles, front and rear.
- Lower a front window and use the key to unlock the door from outside.

⚠ WARNING

Do not pull the inner door handle of driver's(or passenger's) door while the vehicle is moving.

With central door lock switch

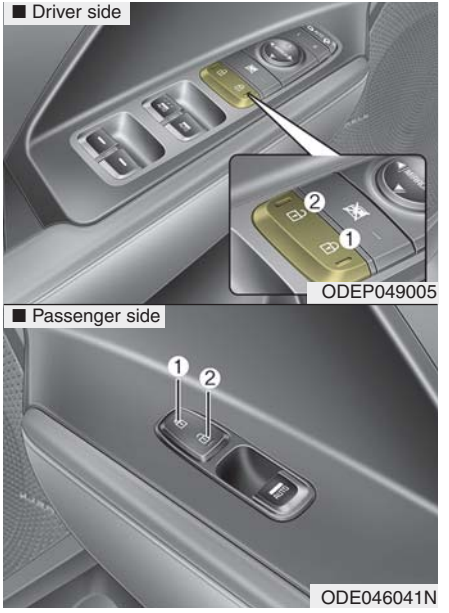

Operate by pressing the central door lock switch.

- When pressing the door lock button (1), all vehicle doors will lock.

- When pressing the door unlock button (2), all vehicle doors will unlock.
- If the key is in the ignition switch or the smart key in the vehicle and any front door is opened, the doors will not lock even though the door lock button (1) is pressed.

⚠ WARNING - Doors

- **The doors should always be fully closed and locked while the vehicle is in motion to prevent accidental opening of the door.**
- **Be careful when opening doors and watch for vehicles, motorcycles, bicycles or pedestrians approaching the vehicle in the path of the door. Opening a door when something is approaching can cause injury.**

⚠ WARNING - Unattended children/animals

Never leave children or animals unattended in your vehicle. An enclosed vehicle can become extremely hot, causing death or severe injury to unattended children or animals who cannot escape the vehicle.

Impact sensing door unlock system

In the event of air bag deployment resulting from a vehicle impact, all doors will automatically unlock.

Speed sensing door lock system

All doors will automatically lock after the vehicle speed exceeds 15 km/h (10 mph).

✻ NOTICE

You can select some auto door lock/unlock features from the User Settings mode in the LCD display. For more information, refer to "User Settings" in this chapter.

Child-protector rear door lock

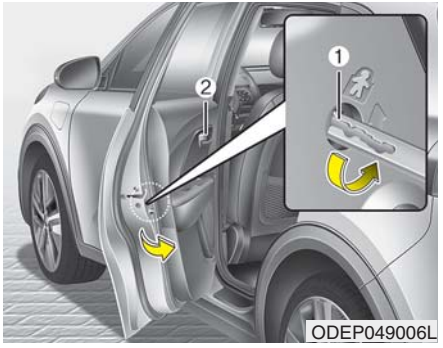

The child safety lock is provided to help prevent children from accidentally opening the rear doors from inside the vehicle. The rear door safety locks should be used whenever children are in the vehicle.

1. Open the rear door.
2. Insert a key (or screwdriver) (1) into the slot located on the rear edge of the door and turn it to the lock ( ) position. When the child safety lock is in the lock position, the rear door will not open even when the inner door handle (2) is pulled.
3. Close the rear door.

To open the rear door, pull the outside door handle.

Even though the doors may be unlocked, the rear door will not open by pulling the inner door handle (2) until the rear door child safety lock is unlocked.

⚠ WARNING - Rear door locks

Use the rear door safety locks whenever children are in the vehicle. If a child accidently opens the rear doors while the vehicle is moving, they may fall out.

LIFTGATE

Opening the liftgate

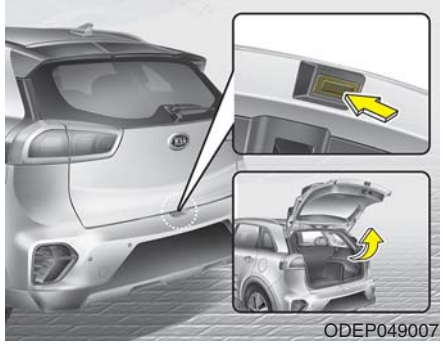
ODEP049007

- The liftgate is locked or unlocked when all doors are locked or unlocked with the transmitter (or smart key) or central door lock switch.
- If unlocked, the liftgate can be opened by pressing the handle switch and then pulling the handle up.
- Only the liftgate is unlocked if the liftgate unlock button on the transmitter or smart key is pressed for approximately 1 second.
- Once the liftgate is opened and then closed, the liftgate locks automatically.

⚠ WARNING

The liftgate swings upward. Make sure no objects or people are near the rear of the vehicle when opening the liftgate.

✻ NOTICE

In cold and wet climates, door lock and door mechanisms may not work properly due to freezing conditions.

⚠ CAUTION - Liftgate lift

Make certain that you close the liftgate before driving your vehicle. Possible damage may occur to the liftgate gas lifters and attached hardware if the liftgate is not closed prior to driving.

Closing the liftgate

ODEP049008

To close the liftgate, lower and push down the liftgate firmly. Make sure that the liftgate is securely latched.

Make sure your hands, feet and other parts of your body are safely out of the way before closing the liftgate.

⚠ WARNING - Exhaust fumes

The liftgate should always be kept completely closed while the vehicle is in motion. If it is left open or ajar, poisonous exhaust gases may enter the vehicle and serious illness or death may result.

⚠ WARNING - Rear cargo area

Occupants should never ride in the rear cargo area where no restraints are available. Occupants should always be properly restrained.

Emergency liftgate safety release

ODEP049009

Your vehicle is equipped with the emergency liftgate safety release lever located on the bottom of the liftgate. When someone is inadvertently locked in the luggage compartment, the liftgate can be opened by doing as follows:

1. Input the mechanical key into the hole.
2. Push the mechanical key to the right (1).
3. Push up the liftgate.

⚠ WARNING

- **No one should be allowed to occupy the cargo area of the vehicle at any time. The cargo area is a very dangerous location in the event of a crash.**
- **Use the release lever for emergencies only. Use with extreme caution, especially while the vehicle is in motion.**

⚠ CAUTION

Make sure nothing is near the liftgate latch and striker while closing the liftgate. It may damage the liftgate's latch.

⚠ WARNING

Do not grasp the part supporting the liftgate (gas lifter), as this may cause serious injury.

WINDOWS

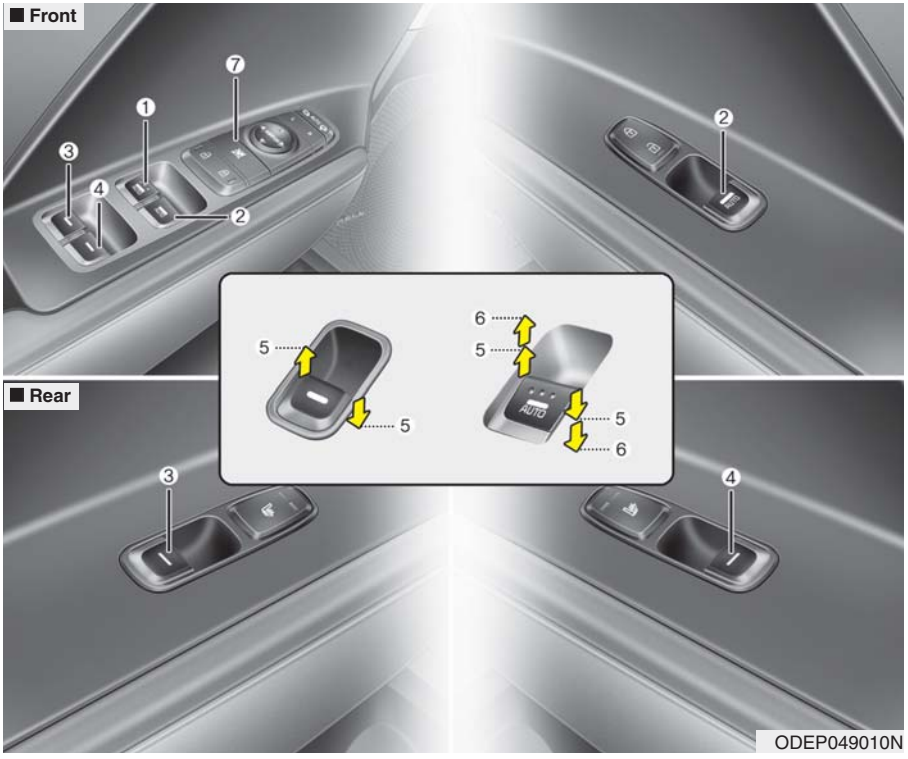

(1) Driver's door power window switch
(2) Front passenger's door power window switch
(3) Rear door (left) power window switch
(4) Rear door (right) power window switch
(5) Window opening and closing
(6) Automatic power window up/down* (Driver's and Passenger's window)
(7) Power window lock button

* if equipped

In cold and wet climates, power windows may not work properly due to freezing conditions.

Power windows

The ignition switch or ENGINE START/STOP button must be in the ON position for power windows to operate.

Each door has a power window switch that controls the door's window. The driver has a power window lock button which can block the operation of rear passenger windows.

The power windows can be operated for approximately 30 seconds after the engine is turned off.

However, if the front doors are opened, the power windows cannot be operated even within the 30 second period.

The driver's door has a master power window switch that controls all the windows in the vehicle.

If the window cannot be closed because it is blocked by objects, remove the objects and close the window.

✻ NOTICE

While driving with the rear windows down or with the sunroof (if equipped) in an open (or partially open) position, your vehicle may demonstrate a wind buffeting or pulsation noise. This noise is a normal occurrence and can be reduced or eliminated by taking the following actions. If the noise occurs with one or both of the rear windows down, partially lower both front windows approximately 2.5 cm (1 in.). If you experience the noise with the sunroof open, slightly reduce the size of the sunroof opening.

⚠ CAUTION

Do not install any accessories in the vehicle that extend into the open window area. Such objects will impact the proper function of the Automatic reversal "jam protection" feature.

Window opening and closing

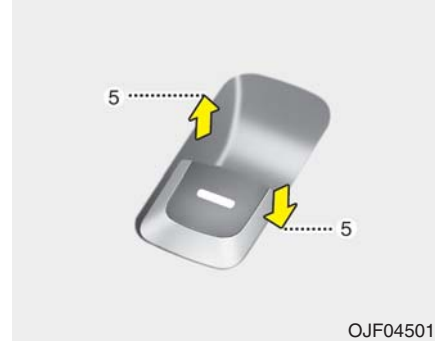

To open or close a window, press down or pull up the front portion of the corresponding switch to the first detent position (5).

Auto up/down window (if equipped)

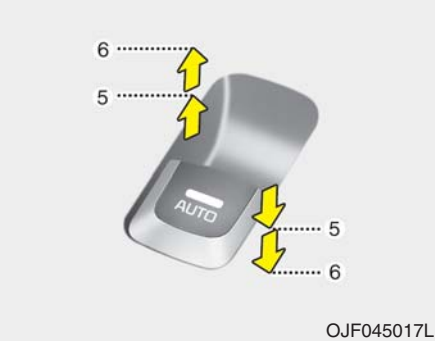

OJF045017L

Pressing or pulling up the power window switch momentarily to the second detent position (6) completely lowers or raises the window even when the switch is released. To stop the window at the desired position while the window is in operation, pull up or press down and release the switch.

If the power window does not operate normally, the automatic power window system must be reset as follows:

1. Turn the ignition switch or ENGINE START/STOP button to the ON position.
2. Close the driver's and passenger's window and continue pulling up the driver's power window switch for at least 1 second after the window is completely closed.

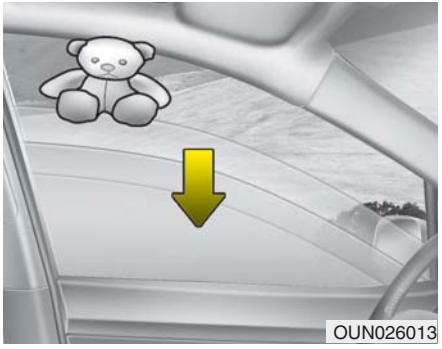
OUN026013

Automatic reversal (for Auto up/down window)

If the upward movement of the window is blocked by an object or part of the body, the window will detect the resistance and will stop upward movement. The window will then lower approximately 30 cm (11.8 in.) to allow the object to be cleared.

The distance may vary based on the size or position of the window. If the window detects the resistance while the power window switch is pulled up continuously, the window will stop upward movement then lower approximately 2.5 cm (1 in.).

If the power window switch is pulled up continuously again within 5 seconds after the window is lowered by the automatic window reversal feature, the automatic window reversal will not operate.

The automatic reverse feature for the driver's window is only active when the "auto up" feature is used by fully pulling up the switch. The automatic reverse feature will not operate if the window is raised using the halfway position on the power window switch.

⚠ WARNING

Always check for obstructions before raising any window to avoid injuries or vehicle damage. If an object less than 4 mm (0.16 in.) in diameter is caught between the window glass and the upper window channel, the automatic reverse window may not detect the resistance and may not stop and reverse direction.

⚠ WARNING

The automatic reverse feature doesn't activate while resetting power window system. Make sure body parts or other objects are safely out of the way before closing the windows to avoid injuries.

⚠ WARNING

Do not install any accessories in the vehicle that extend into the open window area. Such objects could prevent the automatic reverse feature from functioning.

Power window lock button

- The driver can disable the power window switches on the rear passenger doors by pressing the power window lock button located on the driver's door to the LOCK position (pressed).

- **When the power window lock button is pressed :**
  - The driver's master control can operate all the power windows.
  - The front passenger's control can operate the front passenger's power window.
  - The rear passenger's control cannot operate the rear passenger's power window.

⚠ **CAUTION - Opening /closing Window**

To prevent possible damage to the power window system, do not open or close two windows or more at the same time. This will also ensure the longevity of the fuse.

Always double check to make sure all arms, hands, head and other obstructions are safely out of the way before closing a window.

⚠ **WARNING - Power windows**

- **Do not allow children to play with the power windows. Keep the power window lock button (on the driver's door) in the LOCK (pressed) position.**
- **Do not extend a face or arms outside through the window opening while driving.**

If the window cannot be closed because it is blocked by objects, remove the objects and close the window.

HOOD

Opening the hood

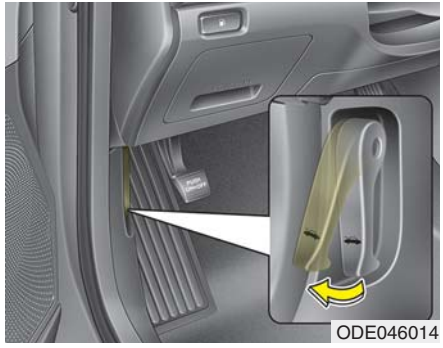

1. Pull the release lever to unlatch the hood. The hood should pop open slightly.

Open the hood after turning off the engine on a flat surface, shifting the shift lever to the P (Park) position and setting the parking brake.

2. Go to the front of the vehicle, raise the hood slightly, push the secondary latch (1) upward inside of the hood center and lift the hood (2).
3. Raise the hood. It will completely rise by itself after it has been raised about halfway.

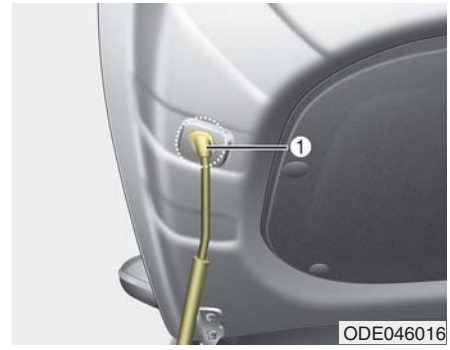

4. Pull out the stay rod.
5. Hold the hood opened with the stay rod (1).

⚠ WARNING - Stay Rod

- **To prevent injuries from being burned by hot metal, grab the stay rod in the area wrapped in rubber.**
- **Ensure that the stay rod is completely inserted into the hole on the hood whenever you inspect the engine compartment. This will prevent the hood from falling and possibly injuring you.**

Hood open warning

ODEP049118

The warning message will appear on the LCD display when hood is open.

The warning chime will operate when the vehicle is being driven at or above 3 km/h (2 mph) with the hood open.

Closing the hood

1. Before closing the hood, check the following:
   - All filler caps in the engine compartment must be correctly installed.
   - Gloves, rags or any other combustible material must be removed from the engine compartment.
2. Lower the hood halfway and push down to securely lock in place.
   - Then double check to be sure the hood is secure.
   - If the hood can be lifted with a slight force, open the hood again and close it more firmly.

⚠ CAUTION - Hood obstruction

Before closing the hood, ensure that all obstructions are removed from the hood opening. Closing the hood with an obstruction present in the hood opening may result in property damage.

⚠ WARNING - Fire risk

Do not leave gloves, rags or any other combustible material in the engine compartment. Doing so may cause a heat-induced fire.

⚠ WARNING - Unsecured engine hood

Always double check to be sure that the hood is firmly latched before driving away. If it is not latched, the hood could fly open while the vehicle is being driven, causing a total loss of visibility, which might result in an accident.

FUEL FILLER DOOR (HYBRID)

Opening the fuel filler door

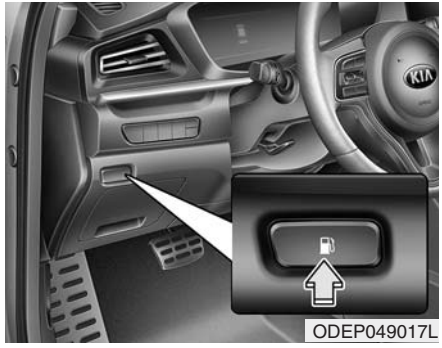

ODEP049017L

The fuel filler door must be opened from inside the vehicle by pressing the fuel filler door opener button.

If the fuel filler door does not open because ice has formed around it, tap lightly or push on the lid to break the ice and release the lid. Do not pry on the lid. If necessary, spray around the lid with an approved de-icer fluid (do not use radiator anti-freeze) or move the vehicle to a warm place and allow the ice to melt.

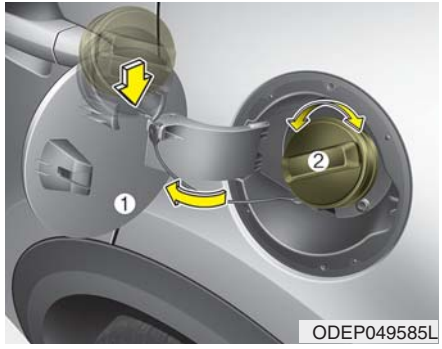

ODEP049585L

1. Stop the engine.
2. To open the fuel filler door, push the fuel filler door opener button.
3. Pull open the fuel filler door (1).
4. To remove the cap, turn the fuel filler cap (2) counterclockwise.
5. Refuel as needed.

⚠ WARNING

Before refueling, be sure to check what type of fuel is used for your vehicle.

If you put diesel fuel into a gasoline-powered vehicle or gasoline into a diesel-powered vehicle, it may affect the fuel system and cause serious damage to the vehicle.

Closing the fuel filler door

1. To install the cap, turn it clockwise until it “clicks” once. This indicates that the cap is securely tightened.
2. Close the fuel filler door and push it in lightly making sure that it is securely closed.

✻ NOTICE

- **There may be an intermittent noise near the refueling hole while the engine is idling if the fuel cap is not closed securely. This occurs normally with the OBD system.**
- **When refueling on unlevel ground, the fuel gauge may not point to the F position.**
  It is not a malfunction. If you move your vehicle to a level ground, the fuel gauge will move to the full position.
- **Tighten the cap until it clicks once, otherwise the fuel cap open warning indicator light will illuminate.**

FUEL FILLER DOOR (PLUG-IN HYBRID)

Opening the fuel filler door

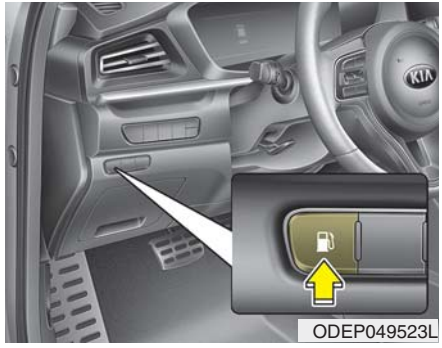

ODEP049523L

The fuel filler door must be opened from inside the vehicle by pushing the fuel filler door button.

✻ NOTICE

If the fuel filler door does not open because ice has formed around it, tap lightly or push on the lid to break the ice and release the lid. Do not pry on the lid. If necessary, spray around the lid with an approved de-icer fluid (do not use radiator anti-freeze) or move the vehicle to a warm place and allow the ice to melt.

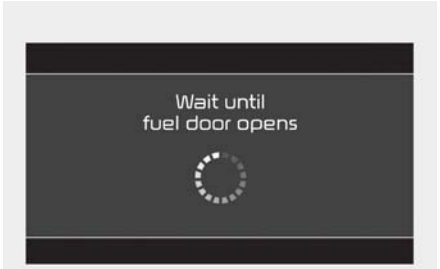

OJFHP048601L

OJFHP048602L

Wait until the fuel tank is depressurized. The message is displayed when the fuel filler door opens after the fuel tank is depressurized.

✻ NOTICE

- **It may take up to 20 seconds to open fuel filler door.**
- **When the fuel filler door is frozen and does not open after 20 seconds at freezing temperature, slightly tap the fuel filler door and then attempt to open it.**

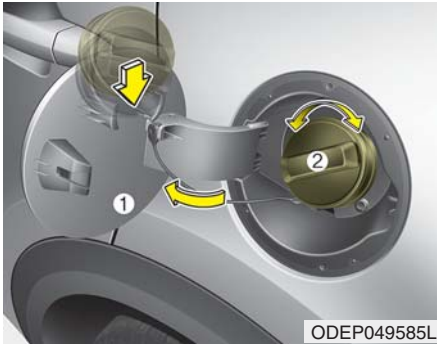

ODEP049585L

1. Stop the engine.
2. To open the fuel filler door, push the fuel filler door opener button.
3. Pull open the fuel filler door (1).
4. To remove the cap, turn the fuel filler cap (2) counterclockwise.
5. Refuel as needed.

⚠ WARNING

Before refueling, be sure to check what type of fuel is used for your vehicle.

If you put diesel fuel into a gasoline-powered vehicle or gasoline into a diesel-powered vehicle, it may affect the fuel system and cause serious damage to the vehicle.

✻ NOTICE

- **Add fuel into the fuel tank within 20 minutes after opening the fuel filler door. After 20 minutes, the fuel tank may shut off, causing fuel to overflow. In this case, re-press the fuel filler door opening button.**
- **Do not leave the fuel filler door opened for an extended period of time. It may discharge the battery.**
- **Close the fuel filler door after fueling the vehicle. If you start the vehicle with the fuel filler door opened, the message, "Check fuel door", illuminates on the LCD display.**

⚠ WARNING - For Plug-in Hybrid

Avoid refueling the vehicle while charging the (high-voltage) hybrid battery. It may cause a fire or an explosion due to static electricity.

Closing the fuel filler door

1. To install the cap, turn it clockwise until it "clicks". This indicates that the cap is securely tightened.
2. Close the fuel filler door and push it lightly and make sure that it is securely closed.

Always check that the fuel cap is installed securely to prevent fuel spillage in the event of an accident.

✻ NOTICE

- **There may be an intermittent noise near the refueling hole while the engine is idling if the fuel cap is not closed securely. This occurs normally with the OBD system.**
- **When refueling on unlevel ground, the fuel gauge may not point to the F position.**
  It is not a malfunction. If you move your vehicle to a level ground, the fuel gauge will move to the full position.
- **Tighten the cap until it clicks once, otherwise the fuel cap open warning indicator light will illuminate.**

⚠ WARNING - Refueling

Always remove the fuel cap carefully and slowly. If the cap is venting fuel or if you hear a hissing sound, wait until the condition stops before completely removing the cap. If pressurized fuel sprays out, it can cover your clothes or skin and subject you to the risk of fire and burns.

Always check that the fuel cap is installed securely to prevent fuel spillage in the event of an accident.

⚠ WARNING - Fire/explosion risk

Read and follow all warnings posted at the gas station facility. Failure to follow all warnings may result in severe personal injury, severe burns or death due to fire or explosion.

⚠ WARNING - Static electricity

- **Before touching the fuel nozzle, you should eliminate potentially dangerous static electricity discharge by touching another metal part of the vehicle, a safe distance away from the fuel filler neck, nozzle, or other gas source.**
- **Do not get back into a vehicle once you have begun refueling since you can generate static electricity by touching, rubbing or sliding against any item or fabric (polyester, satin, nylon, etc.) capable of producing static electricity. Static electricity discharge can ignite fuel vapors resulting in rapid burning. If you must reenter the vehicle, you should once again eliminate potentially dangerous static electricity discharge by touching a metal part of the vehicle, away from the fuel filler neck, nozzle or other gasoline source.**

⚠ WARNING - Portable fuel container

When using an approved portable fuel container, be sure to place the container on the ground prior to refueling. Static electricity discharge from the container can ignite fuel vapors causing a fire. Once refueling has begun, contact with the vehicle should be maintained until the filling is complete. Use only approved portable plastic fuel containers designed to carry and store gasoline.

⚠ WARNING - Cell phone fires

Do not use cellular phones while refueling. Electric current and/or electronic interference from cellular phones can potentially ignite fuel vapors causing a fire.

⚠ WARNING - Smoking

DO NOT use matches or a lighter and DO NOT SMOKE or leave a lit cigarette in your vehicle while at a gas station especially during refueling. Automotive fuel is highly flammable and can, when ignited, result in fire.

⚠ WARNING - Refueling & Vehicle fires

When refueling, always shut the engine off. Sparks produced by electrical components related to the engine can ignite fuel vapors causing a fire. Once refueling is complete, check to make sure the filler cap and filler door are securely closed, before starting the engine.

⚠ WARNING

In case of using EV drive mode for a certain time without running Engine, EMM(Engine Maintenance Mode) will automatically activate by the system to protect fuel system and the engine.

Therefore, even though if it is possible to use EV drive mode with enough battery power, the engine may run by the system to protect fuel system and the engine.

If you leave the fuel without refueling or using for over 6 months, the remained fuel in the fuel system may be deteriorated. From this, corrosion or blocking problem may occur.

It is recommended using minimum 40% of remained fuel at least every 6 months by selecting Hybrid (CS) mode and refuel the vehicle with new fuel.

Make sure to refuel your vehicle according to the “Fuel requirements” suggested in chapter 1.

If the fuel filler cap requires replacement, use only a genuine Kia cap or the equivalent specified for your vehicle. An incorrect fuel filler cap can result in a serious malfunction of the fuel system or emission control system.

⚠ CAUTION - Exterior paint

Do not spill fuel on the exterior surfaces of the vehicle. Any type of fuel spilled on painted surfaces may damage the paint.

SUNROOF (IF EQUIPPED)

ODEEV048035N

If your vehicle is equipped with a sunroof, you can slide or tilt your sunroof with the sunroof control lever located on the overhead console.

The sunroof can only be opened, closed, or tilted when the ignition switch is in the ON position.

The sunroof can be operated for approximately 30 seconds after the ignition key is removed or turned to the ACC or LOCK (or OFF) position.

However, if the front door is opened, the sunroof cannot be operated even within the 30 seconds period.

In cold and wet climates, the sunroof may not work properly due to freezing conditions.

After the vehicle is washed or in a rainstorm, be sure to wipe off any water that is on the sunroof before operating it.

The sunroof cannot slide when it is in the tilt position nor can it be tilted while in an open or slide position.

⚠ CAUTION - Sunroof control lever

Do not continue to press the sunroof control lever after the sunroof is fully opened, closed, or tilted. Damage to the motor or system components could occur.

⚠ WARNING

Never adjust the sunroof or sunshade while driving. This could result in loss of control and an accident that may cause death, serious injury, or property damage.

⚠ CAUTION

Make sure the sunroof is fully closed when leaving your vehicle. If the sunroof is open, rain or snow may leak through the sunroof and wet the interior.

⚠ CAUTION

Do not extend any luggage outside the sunroof while driving.

⚠ WARNING

To avoid accidental injury, do not let children operate the sunroof without adult supervision.

⚠ WARNING - Roof cargo

Do not operate the sun roof while using the roof rack to transport cargo. This may cause the cargo to come loose and distract the driver.

Sliding the sunroof

To open or close the sunroof (manual slide feature), push the sunroof control lever backward or forward to the first detent position.
To open the sunroof (autoslide feature), push the sunroof control switch backward to the second detent position.

The sunroof will slide to the recommended open position before the maximum slide open position.
To stop the sunroof sliding at any point, push the sunroof control switch briefly.

To open the sunroof to the maximum slide open position, press the switch towards the rear of the vehicle once again and hold it until the sunroof slides all the way open.

✻ NOTICE

To reduce wind noise while driving, we recommend you to drive at the recommended position before the maximum slide open position.

To close the sunroof (autoslide feature), move the sunroof control switch forward to the second detent position.

The sunroof will close all the way. To stop the sunroof sliding at any point, pull or push the sunroof control switch briefly.

⚠ CAUTION

To prevent damage to the sunroof, periodically remove any dirt that may accumulate on the guide rail.

Automatic reversal

OBK049018

If an object or part of the body is detected while the sunroof is closing automatically, it will reverse the direction, and then stop.

The auto reverse function does not work if a tiny obstacle is between the sliding glass and the sunroof sash. You should always check that all passengers and objects are away from the sunroof before closing it.

⚠ WARNING - Sunroof operation

When closing the sunroof, make sure there are no body parts in the movement range of the sliding glass. Parts of the body could become trapped or crushed.

Tilting the sunroof

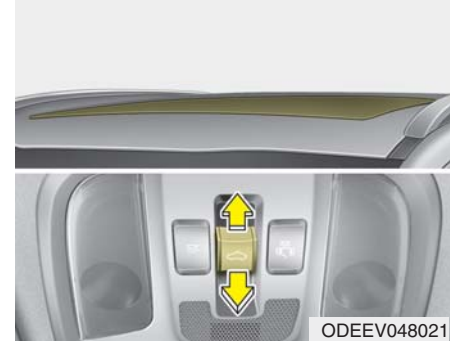
ODEEV048021

To tilt open the sunroof, push the sunroof control lever upward until the sunroof moves to the desired position.

To close the sunroof, push the sunroof lever forward until the sunroof moves to the desired position.

⚠ WARNING - Sunroof

Do not extend the face, neck, arms or body outside through the sunroof opening while driving or operating the sunroof.

⚠ CAUTION - Sunroof motor damage

If you try to open the sunroof when the temperature is below freezing or when the sunroof is covered with snow or ice, the glass or the motor could be damaged.

Sunshade

When opening the sunroof, the sunshade will also open. Once the sunroof is closed, the sunshade can be manually closed.

Resetting the sunroof

Whenever the vehicle battery is disconnected or discharged, or related fuse is blown, you must reset your sunroof system as follows:

1. Turn the ignition switch to the ON position or start the engine. We recommend resetting the sunroof while the engine is running.
2. Close the sunroof completely if opened.
3. Release the sunroof control lever.
4. Move the sunroof control lever forward in the direction of close until the sunroof moves tilt up. Then, release the lever.
5. Move the sunroof control lever forward in the direction of close, until the sunroof operates as follows again:

   Tilt down → Slide Open → Slide Close.

✻ NOTICE

Do not release the lever until the operation is completed.
If you release the lever during operation, try again from step 2.

6. Release the sunroof control lever after all operation has completed. (The sunroof system has been reset.)

❊ For more detailed information, contact an authorized Kia dealer.

✻ NOTICE

If the sunroof is not reset when the vehicle battery is disconnected or discharged, or related fuse is blown, the sunroof may operate improperly.

Sunroof open warning

ODEP049119

If the driver removes the ignition key (smart key: turns off the engine) when the sunroof is not fully closed, the warning chime will sound for a few seconds and a warning image will appear on the LCD display.

Close the sunroof securely when leaving your vehicle.

STEERING WHEEL

Electric Power Steering (EPS)

The power steering uses a motor to assist you in steering the vehicle. If the engine is off or if the power steering system becomes inoperative, the vehicle may still be steered, but it will require increased steering effort.

The EPS is controlled by a power steering control unit which senses the steering wheel torque and vehicle speed to command the motor.

The steering becomes heavier as the vehicle's speed increases and becomes lighter as the vehicle's speed decreases for optimum steering control.

Should you notice any change in the effort required to steer during normal vehicle operation, have the power steering checked by an authorized Kia dealer.

- If the Electric Power Steering System does not operate normally, the warning light will illuminate on the instrument cluster. The steering wheel may require increased steering effort. Take your vehicle to an authorized Kia dealer and have the vehicle checked as soon as possible.
- When you operate the steering wheel in low temperature, noise may occur. If temperature rises, the noise will likely disappear. This is a normal condition.
- When the vehicle is stationary, and the steering wheel is turned all the way to the left or right continuously, the steering wheel becomes harder to turn. The power assist is limited to protect the motor from overheating.

  As time passes, the steering wheel will return to its normal condition.

✻ NOTICE

The following symptoms may occur during normal vehicle operation:

- **The EPS warning light does not illuminate.**
- **The steering gets heavy immediately after turning the ENGINE START/STOP button is ON position. This happens as the system performs the EPS system diagnostics. When the diagnostics are completed, the steering wheel will return to its normal condition.**
- **A click noise may be heard from the EPS relay after turning the ENGINE START/STOP button is ON or OFF position.**
- **A motor noise may be heard when the vehicle is at a stop or at a low driving speed.**
- **If the Electric Power Steering System does not operate normally, the warning light will illuminate on the instrument cluster. The steering wheel may become difficult to control or operate abnormally. Take your vehicle to an authorized Kia dealer and have the vehicle checked as soon as possible.**

(Continued)

(Continued)

- **When the charging system warning light comes on due to low voltage (when the alternator or battery does not operate normally or malfunction), the steering wheel may require increased steering effort.**

Tilt and telescopic steering

Tilt and telescopic steering allows you to adjust the steering wheel before you drive. You can also raise it to give your legs more space when you get on or off the vehicle.

The steering wheel should be positioned so that it is comfortable for you to drive, while permitting you to see the instrument panel warning lights and gauges.

⚠ WARNING - Steering wheel adjustment

Never adjust the angle and height of the steering wheel while driving. You may lose steering control.

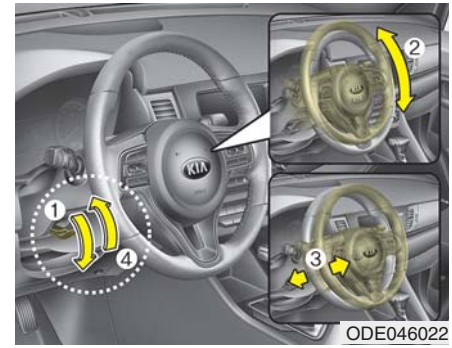

To change the steering wheel angle, pull down the lock-release lever (1), adjust the steering wheel to the desired angle (2) and height (3) then pull up the lock-release lever to lock (4) the steering wheel in place. Be sure to adjust the steering wheel to the desired position before driving.

✻ NOTICE

After adjustment, sometimes the lock release lever may not lock the steering wheel. It is not a malfunction. This occurs when two gears are not engaged correctly. In this case, adjust the steering wheel again and then lock the steering wheel.

Heated steering wheel (if equipped)

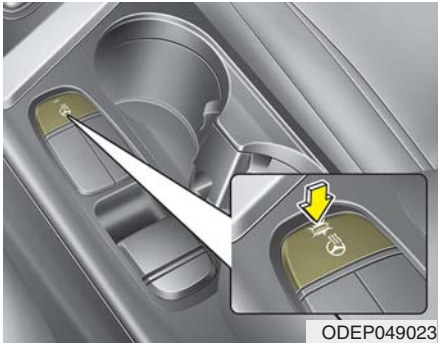

With the ignition switch or ENGINE START/STOP button is ON position, pressing the heated steering wheel button warms the steering wheel. The indicator on the button will illuminate.

To turn the heated steering wheel off, press the button once again. The indicator on the button will turn off.

⚠ WARNING

If the steering wheel becomes too warm, turn the system off. The heated steering wheel may cause burns even at low temperatures, especially if used for long periods of time.

✻ NOTICE

The heated steering wheel will turn off automatically approximately 30 minutes after the heated steering wheel is turned on.

⚠ CAUTION

- ***Do not install any type of grip cover for the steering wheel, it may impair the function of the heated steering wheel system.***
- ***When cleaning the heated steering wheel, do not use an organic solvent such as paint thinner, benzene, alcohol and gasoline. Doing so may damage the surface of the steering wheel.***
- ***If the surface of steering wheel is damaged by sharp object, damage to the heated steering wheel components could occur.***

Horn

ODE046024

To sound the horn, press the horn symbols on your steering wheel. Check the horn regularly to be sure it operates properly.

✻ NOTICE

To sound the horn, press the area indicated by the horn symbol on your steering wheel (see illustration). The horn will operate only when this area is pressed.

MIRRORS

Inside rearview mirror

Adjust the rearview mirror so that the center view through the rear window is seen. Make this adjustment before you start driving.

Do not place objects in the rear seat or cargo area which would interfere with your vision through the rear window.

⚠ WARNING - Mirror adjustment

Do not adjust the rearview mirror while the vehicle is moving. This could result in loss of control.

⚠ WARNING

Do not modify the inside mirror and don't install a wide mirror. It could result in injury during an accident or deployment of the air bag.

Day/night rearview mirror (if equipped)

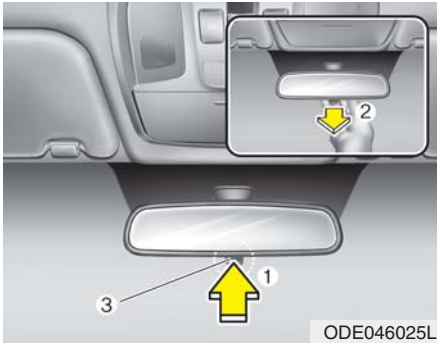

Make this adjustment before you start driving and while the day/night lever (3) is in the day position.

Pull the day/night lever (3) toward you to reduce the glare from the headlights of the vehicles behind you during night driving.

Remember that you lose some rearview clarity in the night position.

❊(1) : Day, (2) : Night

Day/night rearview mirror with Telematics function (if equipped)

For day and night function:

Make this adjustment before you start driving and while the day/night lever (3) is in the day position.

Pull the day/night lever (3) toward you to reduce the glare from the headlights of the vehicles behind you during night driving.

Remember that you lose some rearview clarity in the night position.

❊ (1) : Day, (2) : Night

For Telematics button function:

1. Roadside Assist button
2. Virtual Assist button
3. SOS button

Telematics buttons are also located on the mirror.

Electrochromic mirror (ECM) (if equipped)

The electric rearview mirror automatically controls the glare from the headlights of the vehicles behind you in nighttime or low light driving conditions. The sensor mounted in the mirror senses the light level around the vehicle, and automatically controls the headlight glare from the vehicles behind you.

When the engine is running, the glare is automatically controlled by the sensor mounted in the rearview mirror.

Whenever the shift lever is shifted into reverse (R), the mirror will automatically go to the brightest setting in order to improve the driver's view behind the vehicle.

⚠ CAUTION

When cleaning the mirror, use a paper towel or similar material dampened with glass cleaner. Do not spray glass cleaner directly on the mirror. It may cause the liquid cleaner to enter the mirror housing.

OJF045227L

To operate the electric rearview mirror:

- The mirror defaults to the ON position whenever the ignition switch is turned on.
- Press the ON/OFF button (1) to turn the automatic dimming function off. The mirror indicator light (2) will turn off.

  Press the ON/OFF button (1) to turn the automatic dimming function on. The mirror indicator light (2) will illuminate.

❊(2) : Indicator, (3) : Sensor

Electric Chromic Mirror (ECM) with MTS service (if equipped)

ODE049589C

1. Roadside Assist button
2. Virtual Assist button
3. SOS button

The electric rearview mirror automatically controls the glare from the headlights of the vehicles behind you in nighttime or low light driving conditions.

The sensor (4) mounted in the mirror senses the light level around the vehicle, and automatically controls the headlight glare from the vehicles behind you.

When the engine is running, the glare is automatically controlled by the sensor mounted in the rearview mirror.

Telematics buttons are also located on the mirror.

Electric chromic mirror (ECM) with HomeLink® system

Your vehicle may be equipped with a Gentex Automatic-Dimming Mirror and an Integrated HomeLink® Wireless Control System.

During nighttime driving, this feature will automatically detect and reduce rearview mirror glare while the compass indicates the direction the vehicle is pointed. The HomeLink® Universal Transceiver allows you to activate your garage door(s), electric gate, home lighting, etc.

1. Roadside Assist button
2. Virtual Assist button
3. SOS button
4. HomeLink Channel 1
5. HomeLink Channel 2
6. HomeLink Channel 3
7. HomeLink User Interface Indicator
8. HomeLink Operation Indicator
9. Garage Door Opener Status Indicator : Closing or Closed
10. Garage Door Opener Status Indicator : Opening or Opened

Automatic-Dimming Night Vision Safety™ (NVS®) Mirror

The NVS® Mirror in your vehicle is designed to reduce annoying glare in the rearview mirror during any driving situation. For more information regarding NVS® mirrors and other applications, please refer to the Gentex website:

www.gentex.com

❊ Night Vision Safety™ is a registered trademark of Gentex Corporation.

⚠ CAUTION

The NVS® Mirror automatically reduces glare during driving conditions based upon light levels monitored in front of the vehicle and from the rear of the vehicle. These light sensors are visible through openings in the front and rear of the mirror case. Any object that obstructs either light sensor will degrade the automatic dimming control feature.

Automatic-dimming function

Your mirror will automatically dim upon detecting glare from the vehicles traveling behind you.

✻ NOTICE

The mirror defaults to the ON position each time the vehicle is started.

Integrated HomeLink® Wireless Control System

The HomeLink® Wireless Control System provides a convenient way to replace up to three hand-held radio-frequency (RF) transmitters with a single built-in device. This innovative feature will learn the radio frequency codes of most current transmitters to operate devices such as gate operators, garage door openers, entry door locks, security systems, even home lighting. Both standard and rolling code-equipped transmitters can be programmed by following the outlined procedures. Additional HomeLink® information can be found at: www.homelink.com or by calling 1-800-355-3515.

❊ HomeLink® is a registered trademark of Gentex Corporation.

Retain the original transmitter of the RF device you are programming for use in other vehicles as well as for future HomeLink® programming. It is also suggested that upon the sale of the vehicle, the programmed HomeLink® buttons be erased for security purposes.

Programming HomeLink®

✻ NOTICE

- **When programming a garage door opener, it is advised to park the vehicle outside of the garage.**
- **It is recommended that a new battery be placed in the hand-held transmitter of the device being programmed to HomeLink® for quicker training and accurate transaxle of the radio-frequency signal.**
- **Some vehicles may require the ignition switch or ENGINE START/STOP button to be turned to ACC position for programming and/or operation of HomeLink®.**
- **In the event that there are still programming difficulties or questions after following the programming steps listed below, contact HomeLink® at: www.homelink.com or 1-800-355-3515.**

Standard programming

To program most devices, follow these instructions:

ODE049591C

1. Press and release (1), (2) or (3) button.
   - If the indicator (4) is turned ON in Orange, go to Step 3 since it is a new programming.
   - If the indicator (4) is continuously turned ON or flashes in Green rapidly several times, go to Step 2 since it is a programmed button.
2. Press and hold the button you wish to program about 15-25 seconds until the LED flashes in Orange for several times.
3. Hold the Garage Door Opener Original Transmitter (OT) near the HomeLink Mirror.

4. Press the Original Transmitter (OT) button until the indicator (4) is turned continuously ON or flashes in Green for approximately 10 seconds and it indicates the programming is completed.

✻ NOTICE

- **Some garage door openers may require you to press the program button on the mirror up to three times right after the programming is completed to operate the garage door.**
- **The indicator (4) is turned ON in Orange and flashes for about 60seconds, during the programming mode and if a programming is not successful within the 60 seconds, the programming mode will be abort.**

Gate operator & Canadian programming

During programming, your handheld-transmitter may automatically stop transmitting. Continue to press the Integrated HomeLink® Wireless Control System button while you press and re-press (“cycle”) your handheld transmitter every two seconds until the frequency signal has been learned. The indicator light will flash slowly and then rapidly after several seconds upon successful training.

Operating HomeLink®

1. Press and release one of the HomeLink buttons (1, 2 or 3) that programed.
2. The HomeLink indicator (4) will operate as below:
   - Indicates Green and is continuously ON (Fixed Code Garage Door Opener)
   - Flashes in Green rapidly (Rolling Code Garage Door Opener)

Erasing HomeLink® buttons

1. Press and hold the button (1) and (3) simultaneously.
2. The indicator (4) is turned continuously ON in orange for about 10 seconds.
3. Then the indicator (4) color changes to Green and flashes rapidly.

   Release the buttons once the green indicator flashes.
4. Now HomeLink button (1), (2) and (4) memories are all cleared.

NVS® is a registered trademark and Z-Nav™ is a trademark of the Gentex Corporation, Zeeland, Michigan. HomeLink® is a registered trademark owned by Johnson Controls, Incorporated, Milwaukee, Wisconsin.

FCC ID: NZLZTVHL3

IC: 4112A-ZTVHL3

✻ NOTICE

Industry Canada licence-exempt RSS standard(s).
Operation is subject to the following three conditions:

1. **This device may not cause harmful interference, and**
2. **This device must accept any interference received, including interference that may cause undesired operation.**
3. **The transceiver has been tested and complies with FCC and Industry Canada rules. Changes or modifications not expressly approved by the party responsible for compliance could void the user's authority to operate the device.**

Two Way Communication Programming

1. Complete the HomeLink "Programming" first.
2. Before the first 10 times the HomeLink button is pressed after the programming, the following steps MUST occur to program two way communication. (only for some older garage doors)

3. Press and release the programmed HomeLink button to activate the garage door.
4. Once the garage door is stopped, press and release the "Lean" or "Smart" button on the Garage door opener within 1 minute from the time of pressing the programmed HomeLink button on the rearview mirror.

ODE049595C

5.If the both indicator (4) and (6) are flashing rapidly for about 5 seconds, the two way synchronization is completed.

✻ NOTICE

Some newer garage door openers provides automatic two way communication synchronization while just programming the OT (Original Transmitter).

Operating Two Way Communication

ODE049594C

1.Press and release (1), (2) or (3) button.

ODE049596C

2.The indicator (4) and (6) operates as below:

- If the indicator (4) flashes in Orange, it indicates that the garage door is “closing”.
- If the indicator (4) is ON continuously in Green, it indicates that the garage door is “closed”.
- If the indicator (6) flashes in Orange, it indicates that the garage door is “Opening”.
- If the indicator (6) is ON continuously in Green, it indicates that the garage door is “Opened”.

- If the indicator (4) or (6) does not turn to Green, it indicates that the last status of garage door was not received properly (HomeLink mirror tries to receive the last status of garage door for seconds.).

Recalling Garage Door Status

Homelink mirror provides a way to view the last stored message from the garage door opener. In order to recall the last known status of the last activated device, press the buttons “1 and 2” OR “2 and 3” simultaneously.

- If the indicator (4) is ON continuously in Green, it indicates that the last activated device was “closed” properly.
- If the indicator (6) is ON continuously in Green, it indicates that the last activated device was “open” properly.

✻ NOTICE

Two way communication range distance between “vehicle” and “garage door opener” is 100 m (3,937 in.).
The range may be reduced or increased due to obstacle conditions around the garage door opener, such as houses or trees.

Outside rearview mirror

Be sure to adjust the mirror angles before driving.

Your vehicle is equipped with both left-hand and right-hand outside rearview mirrors. The mirrors can be adjusted remotely with the remote switch. The mirror heads can be folded back to prevent damage during an automatic vehicle wash or when passing through a narrow street.

The right outside rearview mirror is convex. Objects seen in the mirror are closer than they appear.

Use your interior rearview mirror or direct observation to determine the actual distance of following vehicles when changing lanes.

⚠ CAUTION - Rearview mirror

Do not scrape ice off the mirror face; this may damage the surface of the glass. If ice should restrict the movement of the mirror, do not force the mirror for adjustment. To remove ice, use a deicer spray, a sponge or soft cloth with very warm water.

If the mirror is jammed with ice, do not adjust the mirror by force. Use an approved spray de-icer (not radiator antifreeze) to release the frozen mechanism or move the vehicle to a warm place and allow the ice to melt.

⚠ WARNING - Mirror adjustment

Do not adjust or fold the outside rearview mirrors while the vehicle is moving. This could result in loss of control.

Adjusting outside rearview mirror

ODEP049028

The electric remote control mirror switch allows you to adjust the position of the left and right outside rearview mirrors. To adjust the position of either mirror, press the R or L button (1) to select the right side mirror or the left side mirror, then press a corresponding point "▲" (2) on the mirror adjustment control to position the selected mirror up, down, left or right.

After adjustment, press the R or L button again to prevent the inadvertent adjustment.

⚠ **CAUTION - Outside mirror**

- ***The mirrors stop moving when they reach the maximum adjusting angles, but the motor continues to operate while the switch is pressed.***

  Do not press the switch longer than necessary, the motor may be damaged.
- ***Do not attempt to adjust the outside rearview mirror by hand. Doing so may damage the parts.***
- ***When the mirror control, press exactly "▶"(2) marking area. Otherwise, the mirror will move to unintended direction or malfunction.***

Reverse parking aid function (if equipped)

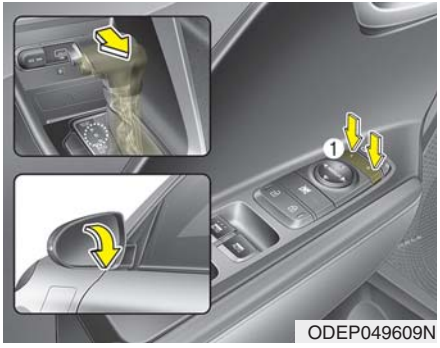

When you shift the shift lever to the R (Reverse) position, the outside rearview mirror(s) will move downward to aid reverse parking. According to the position of the outside rearview mirror switch (1), the outside rearview mirror(s) will operate as follows:

Left or Right : When the remote control outside rearview mirror switch is in the left or right position, both outside rearview mirrors will move downward.

Neutral : When neither switch is selected, the outside rearview mirrors will not move.

✻ **NOTICE**

The outside rearview mirrors will automatically revert to their original positions under the following conditions:

1. **ENGINE START/STOP button or ignition switch is changed to the ACC or OFF position.**
2. **Shift lever is moved to any position except R.**
3. **Remote control outside rearview mirror switch is placed in the middle position.**

⚠ **CAUTION**

If outside rearview mirror is positioned at the outermost (left/right/bottom), the automatic mirror control function may not properly work while vehicle move backward.

Folding the outside rearview mirror

ODEP049030L

Electric type (if equipped)

The outside rearview mirror can be folded or unfolded by pressing the switch when the ENGINE START/STOP button is in the ON position as below.

Left : The mirror will unfold.

Right : The mirror will fold.

Center (AUTO) :

The mirror will fold or unfold automatically as follows:

- Without smart key system
  - The mirror will fold or unfold when the door is locked or unlocked by the transmitter. (if equipped)
- With smart key system
  - The mirror will fold or unfold when the door is locked or unlocked by the smart key.
  - The mirror will fold or unfold when the door is locked or unlocked by the button on the outside door handle.
  - The mirror will unfold when you approach the vehicle (all doors closed and locked) with a smart key in possession. (if equipped)

⚠ **CAUTION - Electric type outside rearview mirror**

The electric type outside rearview mirror operates even though the ignition switch is in the LOCK position or the ENGINE START/STOP button is in the OFF position. However, to prevent unnecessary battery discharge, do not adjust the mirrors longer than necessary while the engine is not running.

Do not fold an electric type outside rearview mirror by hand as this could cause motor failure.

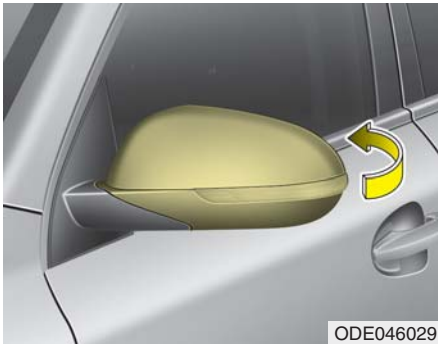

Manual type (if equipped)

To fold the outside rearview mirror, grasp the housing of the mirror and then fold it toward the rear of the vehicle.

INSTRUMENT CLUSTER

■ **Type A for Hybrid**

■ **Type B for Hybrid**

1. Hybrid system gauge
2. Fuel gauge
3. Speedometer
4. Warning and indicator lights
5. LCD display
6. Battery SOC (State of Charge) gauge
7. Distance To Empty

❊ For more details, refer to the “Gauges” in this chapter.

❊ The actual cluster and contents of the LCD display in the vehicle may differ from the illustration.

ODEP049100C/ODEP049538C

■ **Type A for Plug-in Hybrid**

■ **Type B for Plug-in Hybrid**

1. Hybrid system gauge
2. Fuel gauge
3. Speedometer
4. Warning and indicator lights
5. LCD display
6. Battery SOC (State of Charge) gauge
7. Distance To Empty

❊ For more details, refer to the “Gauges” in this chapter.

❊ The actual cluster and contents of the LCD display in the vehicle may differ from the illustration.

ODEP049182C/ODEP049183C

Instrument Cluster Control

Adjusting Instrument Cluster Illumination

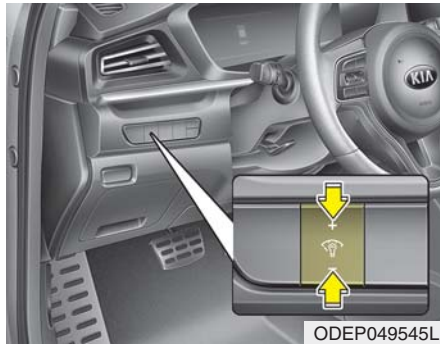

ODEP049545L

The brightness of the instrument panel illumination is changed by pressing the illumination control button (“+” or “-”) when the ignition switch or ENGINE START/STOP button is ON, or the taillights are turned on.

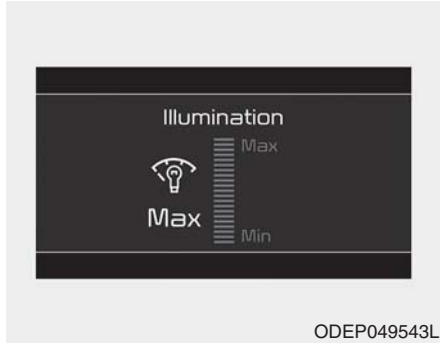

ODEP049543L

- If you hold the illumination control button (“+” or “-”), the brightness will be changed continuously.
- If the brightness reaches to the maximum or minimum level, an alarm will sound.

Gauges

Speedometer

■ Type A

ODEP049105C

■ Type B

ODEP049539C

The speedometer indicates the speed of the vehicle and is calibrated in kilometers per hour (km/h) and/or miles per hour (mph) .

Tachometer (if equipped)

■ Type B - ECO mode selected

ODEP049529L

■ Type B - SPORT mode selected

ODEP049215N

The tachometer indicates the approximate number of engine revolutions per minute (rpm).

When moving the shift lever to the "S" (SPORT) mode, the engine tachometer is displayed while switching to SPORT mode.

Use the tachometer to select the correct shift points and to prevent lugging and/or over-revving the engine.

⚠ CAUTION

Do not operate the engine within the tachometer's RED ZONE. This may cause severe engine damage.

Hybrid System Gauge

■ Type A

ODEP049106

■ Type B

ODEP049186

The hybrid system gauge indicates whether the current driving condition is fuel efficient or not.

- CHARGE : Shows that the energy made by the vehicle is being converted to electrical energy. (Regenerated energy)
- ECO : Shows that the vehicle is being driven in an Eco-friendly manner.
- POWER : Shows that the vehicle is exceeding the Eco-friendly range.

✻ NOTICE

The "EV" indicator comes on or off based on the hybrid system gauge.

- **"EV" indicator ON : Vehicle is using the electric motor or the gasoline engine is stopped.**
- **"EV" indicator OFF : Vehicle is using the gasoline engine.**

Hybrid Battery SOC (State of Charge) Gauge

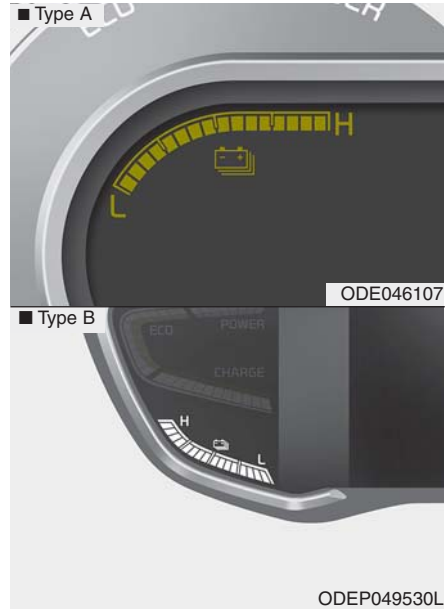

This gauge indicates the remaining hybrid battery power. If the SOC is near the "L (Low)" level, the vehicle automatically operates the engine to charge the battery.

However, if the Service Indicator ( ) and Malfunction Indicator Lamp (MIL) ( ) turn on when the SOC gauge is near the "L (Low)" level, have your vehicle inspected by an authorized Kia dealer.

✻ NOTICE

Never try to start the vehicle if the fuel tank is empty. In this condition, the engine cannot charge the high voltage battery of the hybrid system. If you try to start the vehicle when the fuel is empty, the high voltage battery will become discharged and be damaged.

Plug-in hybrid mode indicator

• CD (Charge Depleting, Electric) mode

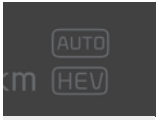

ODEP049550L

: The high-voltage (hybrid) battery is used to drive the vehicle.

• AUTO mode

ODEP049548L

: The AUTO mode will be automatically selected from either from Electric (CD) mode or Hybrid (CS) mode by the system according to the driving condition.

• CS (Charge Sustaining, Hybrid) mode

ODEP049549L

: The high-voltage (hybrid) battery and gasoline engine is used to drive the vehicle.

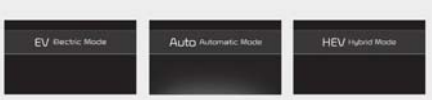

ODEP049189L/ODEP049541L/ODEP049190L

A corresponding message is displayed to indicate the selected mode.

Fuel Gauge

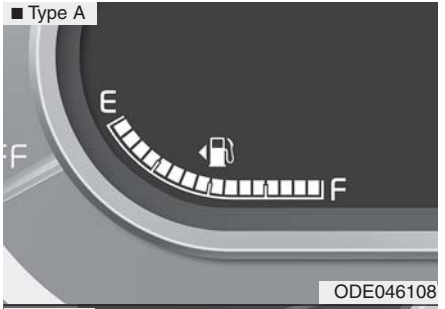

ODE046108

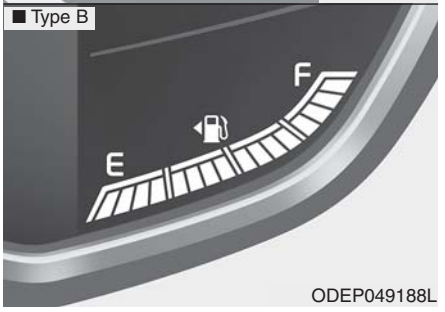

ODEP049188L

This gauge indicates the approximate amount of fuel remaining in the fuel tank.

✻ NOTICE

- **The fuel tank capacity is given in chapter 8.**
- **The fuel gauge is supplemented by a low fuel warning light which will illuminate when the fuel tank is nearly empty.**
- **On inclines or curves, the fuel gauge pointer may fluctuate or the low fuel warning light may come on earlier than usual due to the movement of fuel in the tank.**

✻ NOTICE - Fuel gauge

Running out of fuel can expose vehicle occupants to danger. You must obtain additional fuel as soon as possible after the warning light comes on or when the gauge indicator comes close to the "E (Empty)" level.

⚠ CAUTION - Low fuel

Avoid driving with an extremely low fuel level. Running out of fuel could cause the engine to misfire, damaging the catalytic converter.

✻ NOTICE

Fuel display may not be accurate if vehicle is being fueled while in an incline.

Distance to empty

■ Type A

ODEP049142L

■ Type B

ODEP049561C

- The distance to empty is the estimated distance the vehicle can be driven with the remaining fuel.
  - Distance range : 1 ~ 9,999 km or 1 ~ 9,999 mi.

- If the estimated distance is below 1 km (1 mi.), the trip computer will display "----" as distance to empty.
- If the level of the remaining fuel is more than three-quarters, more than 3 liters (0.8 gallons) of fuel must be refilled for the fuel gauge to change. In other cases, more than 6 liters (1.6 gallons) of fuel must be refilled for the vehicle to change the fuel gauge.

✻ NOTICE

- **If the vehicle is not on level ground or the battery power has been interrupted, the distance to empty function may not operate correctly.**
- **The distance to empty may differ from the actual driving distance as it is an estimate of the available driving distance.**
- **The fuel economy and distance to empty may vary significantly based on driving conditions, driving habits, and condition of the vehicle.**

Odometer

ODEP049597C

The odometer Indicates the total distance that the vehicle has been driven and should be used to determine when periodic maintenance should be performed.

- Odometer range : 1,599,999 kilometers or 0 ~ 999,999 miles.

Outside Temperature Gauge

ODEP049598C

This gauge indicates the current outside air temperatures by 1°C (1°F).

- Temperature range : -40 ~ 60°C (-40 ~ 140°F)

The outside temperature on the display may not change immediately like a general thermometer to prevent the driver from being distracted.

The temperature unit (from °C to °F or from °F to °C) can be changed by using the “User Settings” mode of the LCD display.

❊ For more details, refer to “LCD display” in this chapter.

Dual clutch transmission shift indicator

■ Type A

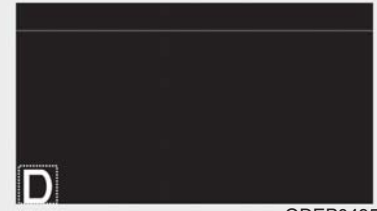

ODEP049557L

■ Type B - ECO mode selected

ODEP049558L

■ Type B - SPORT mode select

ODEP049191N

This indicator displays which shift lever is selected.

- Park : P
- Reverse : R
- Neutral : N
- Drive : D
- Sport mode : S

LCD DISPLAY

LCD Display Control

ODEP049103L

The LCD display modes can be changed by using the control buttons.

(1) 🗐 : MODE button for changing modes

(2) ∧/∨ : MOVE switch for changing items

(3) OK : SELECT/RESET button for setting or resetting the selected item

LCD Display Modes

	Mode				
	Trip Computer	TBT	Driving Assist	User Settings	Master warning
Up/Down	Range	Route Guidance	• Smart Cruise Control • Lane Following Assist • Lane Departure Warning • Lane Keeping Assist	Driver Assistance	The Master Warning mode displays warning messages related to the vehicle when one or more systems is not operating normally.
	Fuel Economy	Destination Info		Door	
	Accumulated Info			Lights	
	Drive Info			Sound	
	Digital Speedometer			Convenience	
	Driving Style		Driver Attention Warning	Service Interval	
	Energy Flow		TPMS	Other	
	Engine Temperature			Language	
				Reset	

❋ **The information provided may differ depending on which functions are applicable to your vehicle.**

Trip computer mode

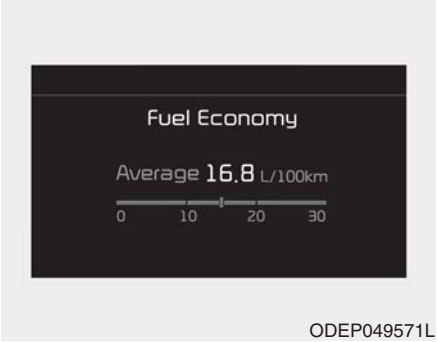

ODEP049571L

The trip computer mode displays information related to vehicle driving parameters including fuel economy, tripmeter information and vehicle speed.

❊ For more details, refer to “Trip Computer” in this chapter.

Turn By Turn (TBT) mode (if equipped)

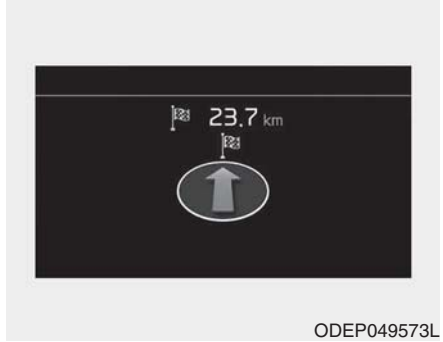

ODEP049573L

This mode displays the state of the navigation.

Driving Assist mode (if equipped)

ODEP049574L

This mode displays the state of :

- - Smart Cruise Control
  - Lane Following Assist
  - Lane Departure Warning
  - Lane Keeping Assist
- Driver Attention Warning

❊For more details, refer to each system information in chapter 5.

- Tire Pressure

❊For more details, refer to “Tire Pressure Monitoring System (TPMS)” in chapter 6.

Master warning mode

ODEP049575L

This warning light informs the driver the following situations.

- Forward Collision-Avoidance Assist system malfunction (if equipped)
- Forward Collision-Avoidance Assist radar blocked (if equipped)
- Blind-Spot Collision Warning system malfunction (if equipped)
- Blind-Spot Collision Warning radar blocked (if equipped)
- Lamp malfunction
- LED headlamp malfunction (if equipped)
- High Beam Assist malfunction (if equipped)
- Tire Pressure Monitoring System (TPMS) malfunction
- Smart Cruise Control system malfunction (if equipped)
- Smart Cruise Control system radar blocked (if equipped)
- Lane Following Assist system malfunction (if equipped), etc.

At this time, a Master Warning icon (⚠) will appear beside the User Settings icon (⚙), on the LCD display.

If the warning situation is solved, the master warning light will be turned off and the Master Warning icon will disappear.

User settings mode (if equipped)

ODEP049586L

In this mode, you can change the settings of the instrument cluster, doors, lamps, etc.

1. Driver Assistance
2. Door
3. Lights
4. Sound
5. Convenience
6. Service Interval
7. Other
8. Language
9. Reset

The information provided may differ depending on which functions are applicable to your vehicle.

ODEP049584L

Shift to P to edit settings

This warning message appears if you try to adjust the User Settings while driving.

For your safety, change the User Settings after parking the vehicle, applying the parking brake and moving the shift lever to P (Park).

1. Driver Assistance (if equipped)

Items	Explanation
SCC Reaction	• Fast/Normal/Slow To adjust the sensitivity of Smart Cruise Control system. ❊ For more details, refer to “Smart Cruise Control (SCC)” in chapter 5.
Driving Assist	• Lane Following Assist To select the function. ❊ For more details, refer to “Lane Following Assist (LFA)” in chapter 5.
Driver Attention Warning	• Leading Vehicle Departure Alert To select the function. ❊ For more details, refer to “Leading vehicle departure alert” in chapter 5. • Low Activity Warning To select the function. ❊ For more details, refer to “Driver Attention Warning (DAW)” in chapter 5.
Warning Timing	• Normal/Later To select when to provide a warning for all driver assistance system.

❊ The information provided may differ depending on which functions are applicable to your vehicle.

Items	Explanation
Forward Safety	• Active Assist/Warning Only/Off To select the function. ❊ For more details, refer to “Forward Collision-Avoidance Assist (FCA)” in chapter 5.
Lane Safety	• Lane Keeping Assist / Lane Departure Warning / Off To select the function. ❊ For more details, refer to “Lane Keeping Assist (LKA)” in chapter 5.
Blind-Spot Safety	• Warning Only/Off To select the function. ❊ For more details, refer to “Blind-spot Collision Warning (BCW)” in chapter 5.
Parking Safety	• Rear Cross-Traffic Safety To select the function. ❊ For more details, refer to “Rear Cross-traffic Collision Warning (RCCW)” in chapter 5.

❊ The information provided may differ depending on which functions are applicable to your vehicle.

2. Door

Items	Explanation
Automatically Lock	• Enable on shift: All doors will be automatically locked if the vehicle is shifted from the P (Park) position to the R (Reverse), N (Neutral), or D (Drive) position. • Enable on speed: All doors will be automatically locked when the vehicle speed exceeds 15 km/h (9.3 mph).
Automatically Unlock	• On shift to P: All doors will be automatically unlocked if the gear is shifted to the P (Park) position. • Vehicle off/On key out : All doors will be automatically unlocked when the ENGINE START/STOP button is set to the OFF position or the ignition key is removed from the ignition switch. • Off : The auto door unlock operation will be canceled.
Two Press Unlock	• If this item is checked, the two press unlock will be activated. The driver's door will unlock if the door unlock button is pressed. When the door unlock button is pressed again within 4 seconds, the remaining doors will unlock.
Horn Feedback (if equipped)	• If this item is checked, the horn feedback will be activated. After locking the door by pressing the lock button on the transmitter, if you press the lock button again within 4 seconds, the warning sound will operate once to indicate that all doors are locked.

❊ The information provided may differ depending on which functions are applicable to your vehicle.

3. Lights (if equipped)

Items	Explanation
One Touch Turn Signal	• Off : The one touch turn signal function will be deactivated. • 3, 5, 7 Flashes : The turn signal indicator will blink 3, 5, or 7 times when the turn signal lever is moved slightly. ❊ For more details, refer to “Lighting” in this chapter.
Ambient Light Brightness	• Adjust the brightness of the Ambient light. - Off/Level 1,2,3,4
Ambient Light Color	• Select the color of the ambient light. - White, Gray, Blue, Eco Green, Bronze, Red
Headlight Delay	To activate or deactivate the headlight delay function.
High Beam Assist	To activate or deactivate High Beam Assist function.

❊ The information provided may differ depending on which functions are applicable to your vehicle.

4. Sound

Items	Explanation
Parking Distance Warning Volume	• Adjust the Park Distance Warning system volume (High/Low).

❊ The information provided may differ depending on which functions are applicable to your vehicle.

5. Convenience (if equipped)

Items	Explanation
Seat Easy Access	• Off : The seat easy access function will be deactivated. • Normal/Extended: When you turn off the engine, the driver's seat will automatically move rearward short (Normal) or long (Extended) for you to enter or exit the vehicle more comfortably. If you change the ignition key or ENGINE START/STOP button from OFF to ACC position, the driver's seat will return to the original position. ❊ For more details, refer to “Driver Position Memory System” in chapter 3.
Welcome Mirror/Light	• If this item checked, the Welcome Mirror/Light will be activated.
Wireless Charging System	• If this item checked, the wireless charging system in the front seat will be activated.
Wiper/Lights Display	• If this item checked, the Wiper/Lights Display will be activated.
Auto Rear Wiper (in R)	• If this item checked, the Auto rear wiper will be activated.
Gear Position Pop-up	• If this item is checked, the Gear position pop-up display will be activated.
Coasting Guide	• Enable Coasting Guide : To activate or deactivate the Coasting guide. • Sound : To activate or deactivate the Coasting guide sound.
Start Coasting	• Choose the initial guiding time for Coasting guide. (Early/Normal/Late)
Icy road warning	• If this item is checked, the Icy road warning display will be activated.

❊ The information provided may differ depending on which functions are applicable to your vehicle.

6. Service Interval (if equipped)

Items	Explanation
Enable Service Interval	If this item is checked, the Service Interval function will be activated.
Adjust Interval	If the service interval menu is activated, you may adjust the time and distance.
Reset	To reset the service interval function.

✻ NOTICE

To use the service interval menu, consult an authorized Kia dealer.

If the service interval is activated and the time and distance is adjusted, messages are displayed in the following situations each time the vehicle is turned on.

- Service in: Displayed to inform the driver the remaining mileage and days to service.
- Service required: Displayed when the mileage and days to service has been reached or passed.

If any of the following conditions occur, the mileage and number of days to service may be incorrect.

- The battery cable is disconnected.
- The battery is discharged.
- The fuse switch is turned off.

7. Other (if equipped)

Items	Explanation
AUX. Battery Saver+ (if equipped)	• If this item is checked, the Aux. Battery Saver+ function will be activated.
Fuel Economy Reset	• If this item checked, the average fuel economy will reset automatically after refueling or after ignition. ❈ For more details, refer to “Trip Computer” in this chapter.
Speed Unit	• MPH, km/h To select Speed unit.
Fuel Economy Unit	• US gallon, UK gallon, km/L, L/100km, To select the Fuel economy unit.
Temperature Unit	• °F, °C To select the Temperature unit.
Tire Pressure Unit	• psi, kPa, bar To select the Tire Pressure Unit.

❈ The information provided may differ depending on which functions are applicable to your vehicle.

8. Language (if equipped)

Items	Explanation
Language	• To select language.

9. Reset

Items	Explanation
Reset	You can reset the menus in the User Settings mode. All menus in the User Settings mode are reset to factory settings, except language and service interval.

Trip modes (Trip computer)

The trip computer is a microcomputer-controlled driver information system that displays information related to driving.

✻ NOTICE

Some driving information stored in the trip computer (for example Average Vehicle Speed) resets if the battery is disconnected.

Trip modes

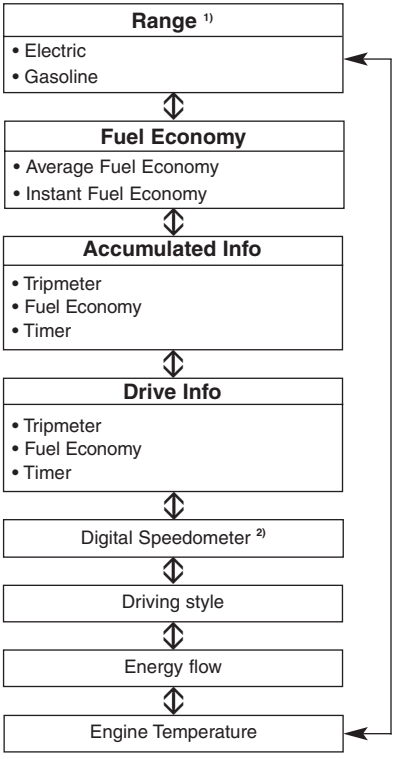

1) : for Plug-in hybrid
2) : for Type A cluster

To change the trip mode, scroll the MOVE scroll switch (∧/∨) in the trip computer mode.

Range (Plug-in hybrid)

■ Type A - Plug-in hybrid

ODEP049192C

■ Type B - Plug-in hybrid

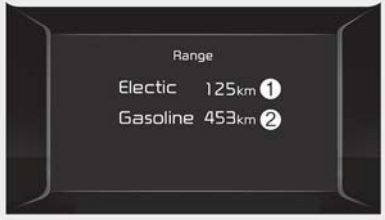

ODEP049562C

- The range is the estimated distance the vehicle can be driven with the remaining high-voltage (hybrid) battery (1, Electric) and fuel in the fuel tank (2, Gasoline).
- If the estimated distance is below 1 km (1 mi.), the trip computer will display "---" as distance to empty.
  - Distance range: 1 ~ 510 km or 1 ~ 510 mi.

✻ NOTICE

- **If the vehicle is not on level ground or the battery power has been interrupted, the range function may not operate correctly.**
- **The range may differ from the actual driving distance as it is an estimate of the available driving distance.**
- **The trip computer may not register additional fuel if less than 6 liters (1.6 gallons) of fuel are added to the vehicle.**
- **The range may vary significantly based on driving conditions, driving habits, and condition of the vehicle.**

Fuel Economy

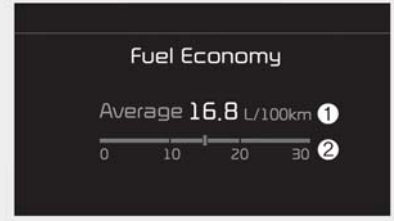

ODEP049572L

Average Fuel Economy (1)

- The average fuel economy is calculated by the total driving distance and fuel consumption since the last average fuel economy reset.
  - Fuel economy range : 0.0 ~ 99.9, 100 ~ 999 MPG, L/100km or km/L
- The average fuel economy can be reset both manually and automatically.

Manual reset

To clear the average fuel economy manually, press the OK button (reset) on the steering wheel for more than 1 second when the average fuel economy is displayed.

Automatic reset

To make the average fuel economy be reset automatically whenever refueling, select the “Fuel Economy Reset” mode in User Setting menu of the LCD display (Refer to “LCD display”).

- OFF - You may set to default manually by using the trip switch reset button.
- After ignition - The vehicle will automatically set to default once 4 hours pass after the ignition switch or ENGINE START/STOP button is turned to the OFF position.
- After refueling - After refueling more than 6 liters (1.6 gallons) and driving over 1 km/h (1 mph), the vehicle will reset to default automatically.

✻ NOTICE

The average vehicle speed is not displayed, when the vehicle drives shorter than 300 meters (0.2 miles) or less than 10 seconds after turning ON the ignition switch or ENGINE START/STOP button.

Instant Fuel Economy (2)

- This mode displays the instant fuel economy while driving.
  - Fuel economy range : 0.0 ~ 30 L/100km, km/L or 0.0 ~ 75 MPG

Accumulated driving information mode

ODEP049601C

This display shows the accumulated trip distance (1), the average fuel efficiency (2), and the total driving time (3).

- Accumulated information is calculated after the vehicle has run for more than 300 meters (0.2 miles).
- If you press “OK” button for more than 1 second after the Cumulative Information is displayed, the information will be reset.
- If the engine is running, even when the vehicle is not in motion, the information will be accumulated.

One time driving information mode

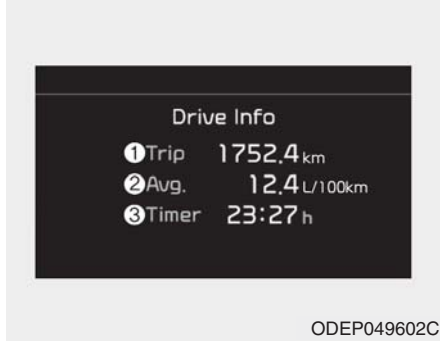

ODEP049602C

This display shows the trip distance (1), the average fuel efficiency (2), and the total driving time (3) information once per one ignition cycle.

- Fuel efficiency is calculated after the vehicle has run for more than 300 meters (0.2 miles).
- The Driving Information will be reset 4 hours after ignition has been turned off. So, when the vehicle ignition is turned on within 4 hours, the information will not be reset.
- If the engine is running, even when the vehicle is not in motion, the information will be accumulated.

Digital speedometer (if equipped)

ODEP049578L

This mode displays the current speed of the vehicle.

Driving Style

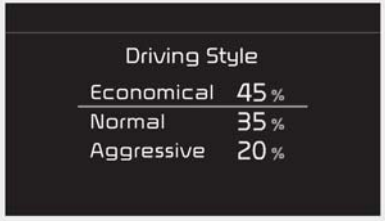

ODEP049579L

The driving style is displayed when you are driving in ECO mode.

When you drive in SPORT mode, each driving category will be displayed with "--".

Energy Flow

ODEP047202N

The hybrid system informs the drivers its energy flow in various operating modes. While driving, the current energy flow is specified in 11 modes.

❊ For more details, refer to "Energy Flow" in Hybrid System Overview chapter.

Engine coolant temperature

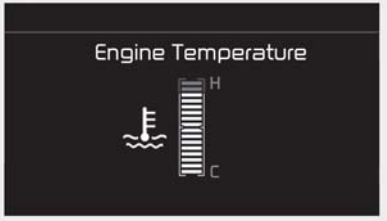

ODEP049603N

This gauge indicates the temperature of the engine coolant when the engine is running.

✻ NOTICE

When the gauge indicator gets out of the normal range, toward the "H (Hot)" position, it indicates overheating of the engine. It may damage the engine.
Do not continue driving with the overheated engine.

❋ For further information, refer to "If the Engine Overheats" in the chapter 6.

Warning messages

Warning messages appear on the LCD to warn the driver. It is located in the center of the instrument cluster.

The warning message may appear differently depending on the type of instrument cluster and some may not show the warning message at all.

The warning message is shown in either symbol, symbol and text, or text type only. You can choose the preferred language by selecting the User setting menu in LCD mode.

Door Open

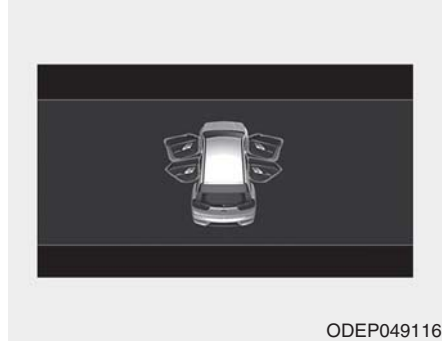

- It means that any door is open.

Liftgate Open

- It means that the liftgate is open.

Hood Open

ODEP049118

- It means that hood is open.

Sunroof Open (if equipped)

ODEP049119

- This warning is displayed if you turn off the engine when the sunroof is open.

Lights mode

OYG049582L

This indicator displays which exterior light is selected using the lighting control.

You can activate or deactivate Wiper/Lights Display function from the User Settings mode in the cluster LCD display.

Wiper mode

■ Front

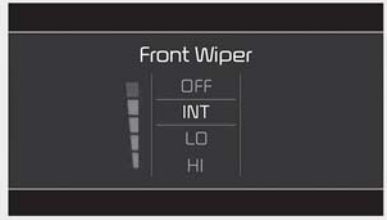

ODEP049604N

■ Rear

ODEP049605N

This indicator displays which wiper speed is selected using the wiper control.

You can activate or deactivate Wiper/Lights Display function from the User Settings mode in the cluster LCD display.

Turn FUSE SWITCH on

- This warning message illuminates if the fuse switch under the steering wheel is OFF.
- It means that you should turn the fuse switch on.

❈ For more details, refer to “Fuses” in chapter 7.

Engine has Overheated

This warning message illuminates when the engine coolant temperature is above 120°C (248°F). This means that the engine is overheated and may be damaged.

If your vehicle is overheated, refer to “Overheating” in chapter 6.

Shift to P (for smart key system)

- This warning message illuminates if you try to turn off the engine without the shift lever in P (Park) position.
- At this time, the ENGINE START/STOP button turns to the ACC position (If you press the ENGINE START/STOP button once more, it will turn to the ON position).

Low key battery (for smart key system)

- This warning message illuminates if the battery of the smart key is discharged when the ENGINE START/STOP button changes to the OFF position.

Press START button while turning wheel (for smart key system)

- This warning message illuminates if the steering wheel does not unlock normally when the ENGINE START/STOP button is pressed.
- It means that you should press the ENGINE START/STOP button while turning the steering wheel right and left.

Steering wheel not locked (for smart key system)

- This warning message illuminates if the steering wheel does not lock when the ENGINE START/STOP button changes to the OFF position.

Check Steering Wheel Lock System (for smart key system)

- This warning message illuminates if the steering wheel does not lock normally when the ENGINE START/STOP button changes to the OFF position.

Press brake pedal to start engine (for smart key system)

- This warning message illuminates if the ENGINE START/STOP button changes to the ACC position twice by pressing the button repeatedly without depressing the brake pedal.
- It means that you should depress the brake pedal to start the engine.

Key not in vehicle (for smart key system)

- This warning message illuminates if the smart key is not in the vehicle when you press the ENGINE START/STOP button.
- It means that you should always have the smart key with you.

Key not detected (for smart key system)

- This warning message illuminates if the smart key is not detected when you press the ENGINE START/STOP button.

Press START button again (for smart key system)

- This warning message illuminates if you can not operate the ENGINE START/STOP button when there is a problem with the ENGINE START/STOP button system.
- It means that you could start the engine by pressing the ENGINE START/STOP button once more.
- If the warning illuminates each time you press the ENGINE START/STOP button, have your vehicle inspected by an authorized Kia dealer.

Press START button with key (for smart key system)

- This warning message illuminates if you press the ENGINE START/STOP button while the warning message “Key not detected” is illuminating.
- At this time, the immobilizer indicator light blinks.

Check BRAKE SWITH fuse (for smart key system)

- This warning message illuminates if the brake switch fuse is disconnected.
- It means that you should replace the fuse with a new one. If that is not possible, you can start the engine by pressing the ENGINE START/STOP button for 10 seconds in the ACC position.

Shift to P or N to start engine (for smart key system)

- This warning message illuminates if you try to start the engine with the shift lever not in the P (Park) or N (Neutral) position.

✻ NOTICE

You can start the engine with the shift lever in the N (Neutral) position. But, for your safety, we recommend that you start the engine with the shift lever in the P (Park) position.

Low washer fluid

- This warning message illuminates on the service reminder mode if the washer fluid level in the reservoir is nearly empty.
- It means that you should refill the washer fluid.

Low fuel

- This warning message illuminates if the fuel tank is nearly empty.
  - When the low fuel level warning light is illuminates.

    Add fuel as soon as possible.

Device in wireless charger (if equipped)

If a smart phone is still left on the wireless charging pad unattended, even when the ENGINE START/STOP button is turned to the ACC or OFF position. And the instrument panel's one time driving information mode has finished, a warning message will lit up on the instrument panel.

❊ For more details, refer to “Wireless smart phone charging system” in this chapter.

Check Hybrid system

This warning message illuminates when there is a problem with the hybrid control system.

Refrain from driving when the warning message is displayed.

In this case, have your vehicle inspected by an authorized Kia dealer.

Check Hybrid system. Turn engine off

This warning message illuminates when there is a problem with the hybrid system. The “ ” indicator will blink and a warning chime will sound until the problem is solved.

In this case, have your vehicle inspected by an authorized Kia dealer.

Check Hybrid system. Do not start engine

This warning message illuminates when the hybrid battery power (SOC) level is low. A warning chime will sound until the problem is solved.

In this case, have your vehicle inspected by an authorized Kia dealer.

Stop vehicle and check power supply

This warning message illuminates when a failure occurs in the power supply system.

In this case, park the vehicle in a safe location and tow your vehicle to the nearest authorized Kia dealer and have the vehicle inspected.

Park with engine On to charge battery

This warning message illuminates when the hybrid battery power (SOC) level is low.

In this case, park the vehicle in a safe location and wait until the hybrid battery is charged.

Refuel to prevent Hybrid battery damage

This warning message illuminates when the fuel tank is nearly empty.

You should refill the fuel tank to prevent hybrid battery damage.

Refill inverter coolant

This warning message illuminates when the inverter coolant is nearly empty.

You should refill the inverter coolant.

Check brake system

This warning message illuminates when the brake performance is low or the regenerative brake does not work properly due to a failure in the brake system.

In this case, it may take longer for the brake pedal to operate and the braking distance may become longer.

Stop vehicle and check brake system

This warning message is displayed when a failure occurs in the brake system.

In this case, park the vehicle in a safe location and tow your vehicle to the nearest authorized Kia dealer and have the vehicle inspected.

Coasting guide (if equipped)

ODEP049583L

A chime will sound and the coasting guide indicator will blink four times to inform the driver when to take the foot off the accelerator by anticipating a decelerating event* based on an analysis of driving routes and road conditions based on the navigation. It encourages the driver to remove foot from the pedal and allow coasting down the road with EV motor only. This helps prevent unnecessary fuel consumption and may increases fuel efficiency.

❊ Example of a deceleration event is going down an extended hill, slowing down approaching a toll booth, and approaching reduced speed zones.

• User settings

The driver can activate or deactivate the Coasting Guide by placing the ignition switch or ENGINE START/STOP in the ON position and by selecting "User Settings → Convenience → Coasting Guide → Enable Coasting Guide".

For the explanation of the system, press and hold the [OK] button.

• Operation conditions

To activate the system, take the following procedures. Enter your destination information on the navigation and select the driving route. Select the ECO mode by driving the vehicle in D (Drive). Then, satisfy the following.

- The driving speed should be between 60 km/h (37 mph) and 160 km/h (99 mph).

❊ The operating speed may vary due to difference between instrument cluster and navigation effected by tire inflation level.

Unplug vehicle to start (Plug-in hybrid)

The message is displayed when you start the engine without unplugging the charging cable. Unplug the charging cable, and then start the vehicle.

Remaining Time (Plug-in hybrid)

The message is displayed to notify the remaining time to fully charge the battery.

Shift to P to charge (Plug-in hybrid)

The message is displayed when the charging connector is plugged with the shift lever in R (Reverse), N (Neutral) or D (Drive). Move the shift lever to P (Park) and re-start the charging process.

Electric Mode/Automatic Mode/Hybrid Mode (Plug-in hybrid)

A corresponding message is displayed when a mode is selected by pressing the EV/HEV button.

Low battery. Maintaining Hybrid mode (Plug-in hybrid)

This message is displayed when unable to convert to EV mode even when pressing the EV/HEV button during HEV mode driving due to insufficient high-voltage (hybrid) battery level.

Low system temperature. Switching to Hybrid mode/High system temperature. Switching to Hybrid mode (Plug-in hybrid)

This message is displayed when the temperature of the high-voltage (hybrid) battery is too low or high.

This warning message is to protect the battery and the hybrid system.

Low system temperature. Maintaining Hybrid mode/High system temperature. Maintaining Hybrid mode (Plug-in hybrid)

This message is displayed when the temperature of the high-voltage (hybrid) battery is too low or too high.

This warning message is to protect the battery and the hybrid system.

Wait until fuel door opens (Plug-in hybrid)

This message is displayed when you attempt to open the fuel filler door with the fuel tank pressurized. Wait until the fuel tank is depressurized.

Fuel door open (Plug-in hybrid)

This message is displayed when the fuel filler door opens after the fuel tank is depressurized. If this message is displayed, you can refuel the fuel tank.

Charging stopped. Check the AC charger (Plug-in hybrid)

This messages is displayed when the charging failed by external charger error.

The purpose of this message is to let you know the error has occurred in the charger itself, not in the vehicle.

Charging stopped. Check the cable connection (Plug-in hybrid)

This messages is displayed when charging is stopped because the charging connector is not correctly connected to the charging inlet. If this occur, separate the charging connector and re-connect it and check whether there is any problem (external damage, foreign substances, etc.) with the charging connector and charging inlet. If the same problem occurs when charging the vehicle with a replaced charging cable or genuine Kia portable charger, have your vehicle inspected by an authorized Kia dealer.

Charging Door Open (Plug-in hybrid)

This message indicates that the charging door is open while in driving-ready state to encourage you to inspect and close the door.(Driving with the charging door open may result in moisture inflow or damage. This message is used to prevent such occurrences.)

Switching to Hybrid mode to allow heating or air conditioning (Plug-in hybrid)

- When the coolant temperature is lower than -14°C (57°F), and you turn the climate control On for heating, the above message will be displayed in the cluster. Then, the vehicle will automatically switch to HEV mode.
- When the coolant temperature is higher than -14°C (57°F), or you turn the climate control Off, the vehicle will automatically return to EV mode.

Switching to Hybrid mode for self-diagnosis (Plug-in hybrid)

- This message is displayed for self-diagnosis of the hybrid mode system.

WARNING AND INDICATOR LIGHTS

Warning lights

✻ NOTICE - Warning lights

Make sure that all warning lights are OFF after starting the engine. If any light is still ON, this indicates a situation that needs attention.

Hybrid system warning light

This warning light illuminates:

- When there is a malfunction with the hybrid system.

  In this case, have the vehicle inspected by an authorized Kia dealer.

Air bag Warning Light

This warning light illuminates:

- Once you set the ignition switch or ENGINE START/STOP button to the ON position.
  - It illuminates for approximately 6 seconds and then goes off.
- When there is a malfunction with the SRS.

  In this case, have your vehicle inspected by an authorized Kia dealer.

Seat Belt Warning Light

This warning light informs the driver that the seat belt is not fastened.

❊ For more details, refer to the “Seat Belts” in chapter 3.

Parking Brake & Brake Fluid Warning Light

This warning light illuminates:

- Once you set the ignition switch or ENGINE START/STOP button to the ON position.
  - It illuminates for approximately 3 seconds
  - It remains on if the parking brake is applied.
- When the parking brake is applied.
- When the brake fluid level in the reservoir is low.
  - If the warning light illuminates with the parking brake released, it indicates the brake fluid level in reservoir is low.

If the brake fluid level in the reservoir is low:

1. Drive carefully to the nearest safe location and stop your vehicle.
2. With the engine stopped, check the brake fluid level immediately and add fluid as required (For more details, refer to “Brake Fluid” in chapter 7).

Then check all brake components for fluid leaks. If any leaks in the brake system are still found, the warning light remains on, or the brakes do not operate properly, do not drive the vehicle.

In this case, have your vehicle towed to an authorized Kia dealer and inspected.

Dual-diagonal braking system

Your vehicle is equipped with dual-diagonal braking systems. This means you still have braking on two wheels even if one of the dual systems should fail.

With only one of the dual systems working, greater pedal pressure is required to stop the vehicle.

Also, the vehicle will require increased stopping distance with only a portion of the brake system working.

If the brakes fail while you are driving, shift to a lower gear for additional engine braking and stop the vehicle as soon as it is safe to do so.

Driving the vehicle with a warning light ON is dangerous. If the Parking Brake & Brake Fluid Warning Light illuminate with the parking brake released, it indicates that the brake fluid level is low.

In this case, have your vehicle inspected by an authorized Kia dealer.

Anti-lock Brake System (ABS) Warning Light

This warning light illuminates:

- Once you set the ignition switch or ENGINE START/STOP button to the ON position.
  - It illuminates for approximately 3 seconds and then goes off.
- When there is a malfunction with the ABS (The normal braking system will still be operational without the assistance of the anti-lock brake system).

  In this case, have your vehicle inspected by an authorized Kia dealer.

Electronic Brake force Distribution (EBD) System Warning Light

These two warning lights illuminate at the same time while driving:

- When the ABS and regular brake system may not work normally.

  In this case, have your vehicle inspected by an authorized Kia dealer.

⚠ WARNING - Electronic Brake force Distribution (EBD) System Warning Light

When both ABS and Parking Brake & Brake Fluid Warning Lights are on, the brake system will not work normally and you may experience an unexpected and dangerous situation during sudden braking thereby increasing the risk of a crash and injury. In this case, avoid high speed driving and abrupt braking. Have your vehicle inspected by an authorized Kia dealer as soon as possible.

✻ NOTICE - Electronic Brake force Distribution (EBD) System Warning Light

When the ABS Warning Light is on or both ABS and Parking Brake & Brake Fluid Warning Lights are on, the speedometer, odometer, or trip-meter may not work. Also, the EPS Warning Light may illuminate and the steering effort may increase or decrease.
In this case, have your vehicle inspected by an authorized Kia dealer as soon as possible.

Regenerative Brake Warning Light

This warning light illuminates :

When the regenerative brake does not operate and the brake does not perform well. This causes the Brake Warning light (red) and Regenerative Brake Warning Light (yellow) to illuminate simultaneously.

In this case, drive safely and have your vehicle inspected by an authorized Kia dealer.

Electric Power Steering (EPS) Warning Light

This warning light illuminates:

- Once you set the ignition switch or ENGINE START/STOP button to the ON position.
  - It remains on until the engine is started.
- When there is a malfunction with the EPS.

  In this case, have your vehicle inspected by an authorized Kia dealer.

Malfunction Indicator Lamp (MIL)

This warning light illuminates:

- Once you set the ignition switch or ENGINE START/STOP button to the ON position.
  - It remains on until the engine is started.
- When there is a malfunction with the emission control system.

  In this case, have your vehicle inspected by an authorized Kia dealer.

⚠ CAUTION - Malfunction Indicator Lamp (MIL)

Driving with the Malfunction Indicator Lamp (MIL) on may cause damage to the emission control systems which could affect drivability and/or fuel economy.

⚠ CAUTION - Catalytic Converter Damage

If the Malfunction Indicator Lamp (MIL) illuminates, potential catalytic converter damage is possible which could result in loss of engine power.

In this case, have your vehicle inspected by an authorized Kia dealer as soon as possible.

Charging System Warning Light

This warning light illuminates:

- Once you set the ignition switch or ENGINE START/STOP button to the ON position.
  - It remains on until the engine is started.
- When there is a malfunction with either the alternator or electrical charging system.

If there is a malfunction with either the alternator or electrical charging system:

1. Drive carefully to the nearest safe location and stop your vehicle.
2. Turn the engine off and check the alternator drive belt for looseness or breakage.

   If the belt is adjusted properly, there may be a problem in the electrical charging system.

   In this case, have your vehicle inspected by an authorized Kia dealer as soon as possible.

Engine Oil Pressure Warning Light

This warning light illuminates:

- Once you set the ignition switch or ENGINE START/STOP button to the ON position.
  - It remains on until the engine is started.
- When the engine oil pressure is low.

If the engine oil pressure is low:

1. Drive carefully to the nearest safe location and stop your vehicle.
2. Turn the engine off and check the engine oil level (For more details, refer to “Engine Oil” in chapter 7). If the level is low, add oil as required.

   If the warning light remains on after adding oil or if oil is not available, have your vehicle inspected by an authorized Kia dealer as soon as possible.

⚠ CAUTION - Engine damage

If the engine is not stopped immediately after the engine oil pressure warning light is illuminated and stays on while the engine is running, serious engine damage may result.

If the warning light stays on while the engine is running, it indicates that there may be serious engine damage or malfunction. In this case,

1. Stop the vehicle as soon as it is safe to do so.
2. Turn off the engine and check the oil level. If the oil level is low, fill the engine oil to the proper level.
3. Start the engine again. If the warning light stays on after the engine is started, turn the engine off immediately. In this case, have your vehicle inspected by an authorized Kia dealer.

Low Fuel Level Warning Light

This warning light illuminates:

When the fuel tank is nearly empty. Add fuel as soon as possible.

⚠ CAUTION - Low Fuel Level

Driving with the Low Fuel Level warning light on or with the fuel level below “E” can cause the engine to misfire and damage the catalytic converter (if equipped).

Low Tire Pressure Warning Light

This warning light illuminates:

- Once you set the ignition switch or ENGINE START/STOP button to the ON position.
  - It illuminates for approximately 3 seconds and then goes off.
- When one or more of your tires are significantly underinflated.

❊For more details, refer to “Tire Pressure Monitoring System (TPMS)” in chapter 6.

This warning light remains on after blinking for approximately 70 seconds or repeats blinking on and off at the intervals of approximately 4 seconds:

- When there is a malfunction with the TPMS.

  In this case, have your vehicle inspected by an authorized Kia dealer as soon as possible.

❊For more details, refer to “Tire Pressure Monitoring System (TPMS)” in chapter 6.

⚠ WARNING - Low tire pressure

- **Significantly low tire pressure makes the vehicle unstable and can contribute to loss of vehicle control and increased braking distances.**
- **Continued driving on low pressure tires may cause the tires to overheat and fail.**

- The TPMS cannot alert you to severe and sudden tire damage caused by external factors.
- If you notice any vehicle instability, immediately take your foot off the accelerator pedal, apply the brakes gradually with light force, and slowly move to a safe position off the road.

Master Warning light (if equipped)

- This warning light informs the driver the following situations.
- Forward Collision-Avoidance Assist system malfunction (if equipped)
- Forward Collision-Avoidance Assist radar blocked (if equipped)
- Blind-Spot Collision Warning system malfunction (if equipped)
- Blind-Spot Collision Warning radar blocked (if equipped)
- Lamp malfunction
- LED headlamp malfunction (if equipped)
- High Beam Assist malfunction (if equipped)
- Tire Pressure Monitoring System (TPMS) malfunction
- Smart Cruise Control system malfunction (if equipped)
- Smart Cruise Control system radar blocked (if equipped)
- Lane Following Assist system malfunction (if equipped), etc.

The Master Warning Light illuminates when one or more of the above warning situations occur. If the warning situation is resolved, the master warning light will turn off.

Engine Coolant Temperature Warning Light

This warning light illuminates:

- When the engine coolant temperature is above 120°C (248°F). This means that the engine is overheated and may be damaged.

  If your vehicle is overheated, refer to “If the engine overheats” in chapter 6.

⚠ CAUTION - Engine Overheating

Do not continue driving with the engine overheated. Otherwise the engine may be damaged.

Electronic Parking Brake (EPB) Warning Light (if equipped)

EPB

This warning light illuminates:

- Once you set the ignition switch or ENGINE START/STOP button to the ON position.
  - It illuminates for approximately 3 seconds and then goes off.
- When there is a malfunction with the EPB.

  In this case, have your vehicle inspected by an authorized Kia dealer.

✻ NOTICE - Electronic Parking Brake (EPB) Warning Light

The Electronic Parking Brake (EPB) Warning Light may illuminate when the Electronic Stability control (ESC) Indicator Light comes on to indicate that the ESC is not working properly (This does not indicate malfunction of the EPB).

LED Headlamp Warning Light (if equipped)

This warning light illuminates:

- Once you set the ignition switch or ENGINE START/STOP button to the ON position.
  - It illuminates for approximately 3 seconds and then goes off.
- When there is a malfunction with the LED headlamp.

In this case, have your vehicle inspected by an authorized Kia dealer.

⚠ CAUTION - LED Headlamp Warning Light

Continuous driving with the LED Headlamp Warning Light on can reduce LED headlamp (low beam) life.

Forward Collision-Avoidance Assist System Warning Light (if equipped)

This warning light illuminates:

- Once you set the ignition switch or ENGINE START/STOP button to the ON position.
  - The FCA warning light illuminates for approximately 3 seconds and then turns off.
- When there is a malfunction with FCA.

  If this occurs, have your vehicle inspected by an authorized Kia dealer.

❊ For more details, refer to “Forward Collision-Avoidance Assist (FCA)” in chapter 5.

Icy Road Warning Light

- This warning light is to warn the driver the road may be icy.
- When the temperature on the outside temperature gauge is approximately below 4°C (39°F), the Icy Road Warning Light and Outside Temperature Gauge blinks and then illuminates. Also, the warning chime sounds 1 time.

✻ NOTICE

If the icy road warning light appears while driving, you should drive more attentively and safely, refraining from over-speeding, rapid acceleration, sudden braking or sharp turning, etc.

Indicator Lights

Charging Cable Connection Indicator (Plug-in hybrid)

This indicator illuminates in red when the charging cable is connected.

Electronic Stability Control (ESC) Indicator Light

This indicator light illuminates:

- Once you set the ignition switch or ENGINE START/STOP button to the ON position.
  - It illuminates for approximately 3 seconds and then goes off.
- When there is a malfunction with the ESC system.

  In this case, have your vehicle inspected by an authorized Kia dealer.

This indicator light blinks:

While the ESC is operating.

✻For more details, refer to “Electronic Stability Control (ESC)” in chapter 5.

Electronic Stability Control (ESC) OFF Indicator Light

This indicator light illuminates:

- Once you set the ignition switch or ENGINE START/STOP button to the ON position.
  - It illuminates for approximately 3 seconds and then goes off.
- When you deactivate the ESC system by pressing the ESC OFF button.

❊For more details, refer to “Electronic Stability Control (ESC)” in chapter 5.

Immobilizer Indicator Light (Without Smart Key)

This indicator light illuminates:

- When the vehicle detects the immobilizer in your key properly while the ignition switch is ON.
  - At this time, you can start the engine.
  - The indicator light goes off after starting the engine.

This indicator light blinks:

- When there is a malfunction with the immobilizer system.

  In this case, have your vehicle inspected by an authorized Kia dealer.

Immobilizer Indicator Light (With Smart Key)

This indicator light illuminates for up to 30 seconds:

- When the vehicle detects the smart key in the vehicle properly while the ENGINE START/STOP button is ACC or ON.
  - At this time, you can start the engine.
  - The indicator light goes off after starting the engine.

This indicator light blinks for a few seconds:

- When the smart key is not in the vehicle.
  - At this time, you can not start the engine.

This indicator light illuminates for 2 seconds and goes off:

- When the vehicle cannot detect the smart key which is in the vehicle while the ENGINE START/STOP button is ON.

  In this case, have your vehicle inspected by an authorized Kia dealer.

This indicator light blinks:

- When the battery of the smart key is weak.
  - At this time, you cannot start the engine. However, you can start the engine if you press the ENGINE START/STOP button with the smart key. (For more details, refer to “Starting the hybrid system” in chapter 5.)
- When there is a malfunction with the immobilizer system.

  In this case, have your vehicle inspected by an authorized Kia dealer.

Turn Signal Indicator Light

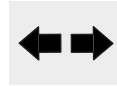

This indicator light blinks:

- When you turn the turn signal light on.

If any of the following occurs, there may be a malfunction with the turn signal system. In this case, have your vehicle inspected by an authorized Kia dealer.

- The indicator light does not blink but illuminates.
- The indicator light blinks more rapidly.
- The indicator light does not illuminate at all.

High Beam Indicator Light

This indicator light illuminates:

- When the headlights are on and in the high beam position
- When the turn signal lever is pulled into the Flash-to-Pass position.

Front Fog Indicator Light (if equipped)

This indicator light illuminates:

- When the front fog lights are on.

Low Beam Indicator Light (if equipped)

This indicator light illuminates:

- When the headlights are on.

Light ON Indicator Light

This indicator light illuminates:

- When the tail lights or headlights are on.

High Beam Assist indicator (if equipped)

This warning light illuminates :

- When the High-Beam is on with the light switch in the AUTO light position.
- If your vehicle detects oncoming or preceding vehicles, High Beam Assist system will switch the high beam to low beam automatically.

❊For more details, refer to “High Beam Assist (HBA)” in chapter 4.

EV Mode Indicator

This indicator illuminates when the vehicle is driven by the electric motor.

Ready Indicator

This indicator illuminates :

When the vehicle is ready to be driven.

- ON : Normal driving is possible.
- OFF : Normal driving is not possible, or a problem has occurred.
- Blinking : Emergency driving.

When the ready indicator goes OFF or blinks, there is a problem with the system. In this case, have your vehicle inspected by an authorized Kia dealer.

AUTO HOLD Indicator Light (if equipped)

This indicator light illuminates:

- [White] When you activate the auto hold system by pressing the AUTO HOLD button.
- [Green] When you stop the vehicle completely by depressing the brake pedal with the auto hold system activated.
- [Yellow] When there is a malfunction with the auto hold system.

  In this case, have your vehicle inspected by an authorized Kia dealer.

❊For more details, refer to “Auto Hold” in chapter 5.

Lane Keeping Assist System Indicator (if equipped)

This indicator light illuminates :

- [Green] When the system operating conditions are satisfied.
- [White] The system operating conditions are not satisfied.
- [Yellow] When there is a malfunction with Lane Keeping Assist system.

  In this case, have your vehicle inspected as soon as possible by an authorized Kia dealer.

❊For more details, refer to “Lane Keeping Assist (LKA)” in chapter 5.

SPORT Mode Indicator Light

This indicator light illuminates:

- When the driver moves the shift lever to S (Sport).

❊ For more information, refer to "Dual Clutch Transmission" in chapter 5.

ECO Mode Indicator Light

This indicator light illuminates:

- When the driver moves the shift lever to D (Drive).

❊ Formore information, refer to "Dual Clutch Transmission" in chapter 5.

REAR VIEW MONITOR (RVM)

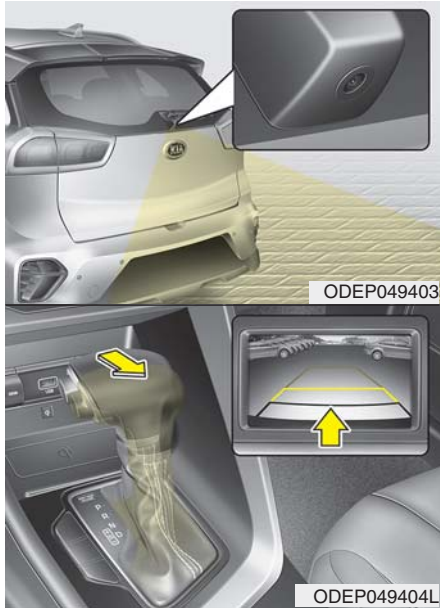

Rear View Monitor system will activate with the ignition switch ON and the shift lever in the R (Reverse) position.

- This system is a supplemental system only. It is the responsibility of the driver to always check the inside/outside rearview mirrors and the area behind the vehicle before and while backing up because there is a dead zone that can't be seen by the camera.
- Always keep the camera lens clean. If lens is covered with foreign matter, the camera may not operate normally.

⚠ WARNING - Backing & using camera

Never rely solely on the rear view camera when backing up. You must always look over both shoulders and continuously check all three rear view mirrors. Due to the difficulty of ensuring that the area behind you remains clear, always back up slowly and stop immediately if you even suspect that a person, and especially a child, might be behind you.

REVERSE PARKING DISTANCE WARNING (PDW) (IF EQUIPPED)

Reverse Parking Distance Warning system assists the driver during backward movement of the vehicle by chiming if any object is sensed within a distance of 48 in (120 cm) behind the vehicle.

This system is a supplemental system and it is not intended to nor does it replace the need for extreme care and attention of the driver. The sensing range and objects detectable by rear ultrasonic sensors (①) are limited. Whenever backing-up, pay as much attention to what is behind you as you would in a vehicle without a Reverse Parking Distance Warning system.

⚠ WARNING

- Reverse Parking Distance Warning system

Never rely solely on the Reverse Parking Distance Warning system. Always perform a visual inspection to make sure the vehicle is clear of all obstructions before moving the vehicle in any direction. Stop immediately if you are aware of a child or other person anywhere near your vehicle. Some objects may not be detected by the sensors, due to the object's size or material.

Operation of Reverse Parking Distance Warning system

Operating condition

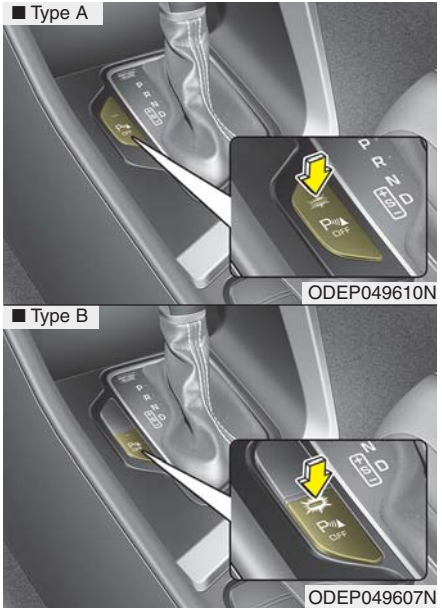

Push the button to turn off the Parking Distance Warning (Reverse) system. The indicator light on the button will turn on.

- This system will activate when backing up with the ignition switch or ENGINE START/STOP button to the ON position.

  If the vehicle is moving at a speed over 5 km/h (3 mph), the system may not be activated correctly.
- The sensing distance while the back-up warning system is in operation is approximately 120 cm (48 in) at the rear bumper center area, 60 cm (24 in) at the rear bumper both side area.
- When more than two objects are sensed at the same time, the closest one will be recognized first.

Types of warning sound

- When an object is 60 cm to 120 cm (24 in to 48 in) from the rear bumper: Buzzer beeps intermittently.
- When an object is 30 cm to 60 cm (12 in to 24 in) from the rear bumper: Buzzer beeps more frequently.
- When an object is within 30 cm (12 in) of the rear bumper:

  Buzzer sounds continuously.

Non-operational conditions of Reverse Parking Distance Warning system

Reverse Parking Distance Warning system may not operate properly when:

1. Moisture is frozen to the sensor. (It will operate normally once the moisture clears.
2. The sensor is covered with foreign matter, such as snow or water, or the sensor cover is blocked. (It will operate normally when the material is removed or the sensor is no longer blocked.)
3. Driving on uneven road surfaces (unpaved roads, gravel, bumps, gradient).
4. Objects generating excessive noise (vehicle horns, loud motorcycle engines, or truck air brakes) are within range of the sensor.
5. Heavy rain or water spray exists.
6. Wireless transmitters or mobile phones are within range of the sensor.
7. The sensor is covered with snow.
8. Trailer towing

The detecting range may decrease when:

1. The sensor is covered with foreign matter such as snow or water. (The sensing range will return to normal when removed.)
2. Outside air temperature is extremely hot or cold.

The following objects may not be recognized by the sensor:

1. Sharp or slim objects such as ropes, chains or small poles.
2. Objects which tend to absorb the sensor frequency such as clothes, sound absorbent material or snow.
3. Undetectable objects smaller than 100 cm (4 in) in height and narrower than 14 cm (6 in) in diameter.

Reverse Parking Distance Warning system precautions

- Reverse Parking Distance Warning system may not sound consistently depending on the speed and shapes of the objects detected.
- Reverse Parking Distance Warning system may malfunction if the vehicle bumper height or sensor installation has been modified or damaged. Any non-factory installed equipment or accessories may also interfere with the sensor performance.
- The sensor may not recognize objects less than 30 cm (12 in) from the sensor, or it may sense an incorrect distance. Use caution.
- When the sensor is frozen or covered with snow, dirt, or water, the sensor may be inoperative until the material is removed using a soft cloth.
- To prevent damage, do not push, scratch or strike the sensor.

✻ NOTICE

This system can only sense objects within the range and location of the sensors. It cannot detect objects in other areas where sensors are not installed. Also, small or slim objects, such as poles or objects located between sensors may not be detected by the sensors.
Always visually check behind the vehicle when backing up.
Be sure to inform any drivers of the vehicle that may be unfamiliar with the system regarding the system's capabilities and limitations.

Self-diagnosis

If you don’t hear an audible warning sound or if the buzzer sounds intermittently when shifting the gear to the R (Reverse) position, this may indicate a malfunction in Reverse Parking Distance Warning system. If this occurs, have your vehicle checked by an authorized Kia dealer as soon as possible.

✻ NOTICE

Your new vehicle warranty does not cover any accidents or damage to the vehicle or injuries to its occupants due to a Reverse Parking Distance Warning system malfunction. Always drive safely and cautiously.

FORWARD/REVERSE PARKING DISTANCE WARNING (PDW) (IF EQUIPPED)

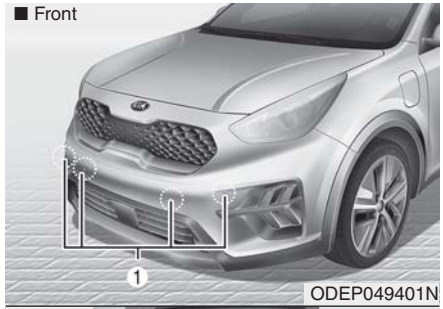

Forward/Reverse Parking Distance Warning system assists the driver during movement of the vehicle by chiming if any object is sensed within the distance of 100 cm (40 in.) in front and 120 cm (48 in.) behind the vehicle.

This system is a supplemental system and it is not intended to nor does it replace the need for extreme care and attention of the driver.

The sensing range and objects detectable by the sensors (①) are limited. Whenever moving pay as much attention to what is in front and behind of you as you would in a vehicle without a Parking Distance Warning system.

⚠ WARNING

Parking Distance Warning system is a supplemental system only. The operation of Parking Distance Warning system can be affected by several factors (including environmental conditions). It is the responsibility of the driver to always check the front and rear views before and while parking.

Operation of Parking Distance Warning system

Operating condition

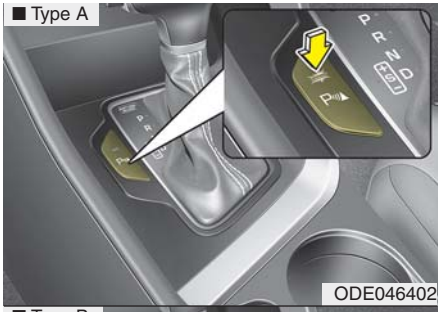

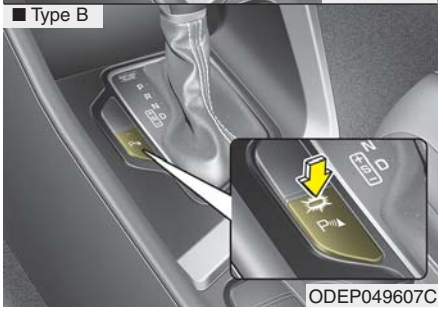

- This system activates when Parking Distance Warning system button is pressed with the ignition switch ON.
- The indicator of Parking Distance Warning system button turns on automatically and activates Parking Distance Warning system when you shift the gear to the R (Reverse) position. It will turn off automatically when you drive above 20 km/h (12 mph).
- The sensing distance while backing up is approximately 120 cm (48 in.) when you are driving less than 10 km/h (6 mph).
- The sensing distance while moving forward is approximately 100 cm (40 in.) when you are driving less than 10 km/h (6 mph).
- When more than two objects are sensed at the same time, the closest one will be recognized first.
- The side sensors are activated when you shift the gear to the R (Reverse) position.
- If the vehicle speed is above 20 km/h (12 mph), the system automatically turns off. To activate again, push the button.

✻ NOTICE

It may not operate if the vehicle's distance from the object is already less than approximately 25 cm (10 in) when the system is activated.

Type of warning indicator and sound

Distance from object		Warning indicator		Warning sound
		When driving forward	When driving rearward	
60 ~ 120 cm (24 ~ 40 in.)	Front		-	Buzzer beeps intermittently
60 ~ 120 cm (24 ~ 48 in.)	Rear	-		Buzzer beeps intermittently
30 ~ 60 cm (12 ~ 24 in.)	Front			Buzzer beeps intermittently
	Rear	-		Buzzer beeps intermittently
30 cm (12 in.)	Front			Buzzer sounds continuously
	Rear	-		Buzzer sounds continuously

✻ NOTICE

- **The actual warning sound and indicator may differ from the illustration according to objects or sensor status.**
- **Do not wash the vehicle's sensor with high pressure water.**

✻ NOTICE

- **This system can only sense objects within the range and location of the sensors; it can not detect objects in other areas where sensors are not installed. Also, small or slim objects, such as poles or objects located between sensors may not be detected by the sensors. Always visually check behind the vehicle when backing up.**
- **Be sure to inform any drivers of the vehicle that may be unfamiliar with the system regarding the system's capabilities and limitations.**

Non-operational conditions of Forward/Reverse Parking Distance Warning system

Forward/Reverse Parking Distance Warning system may not operate normally when:

1. Moisture is frozen to the sensor. (It will operate normally when moisture melts.)
2. Sensor is covered with foreign matter, such as snow or water, or the sensor cover is blocked. (It will operate normally when the material is removed or the sensor is no longer blocked.)
3. Sensor is stained with foreign matter such as snow or water. (Sensing range will return to nor mal when removed.)
4. The Parking Distance Warning system button is off.

There is a possibility of Forward/Reverse Parking Distance Warning system malfunction when:

1. Driving on uneven road surfaces such as unpaved roads, gravel, bumps, or gradient.
2. Objects generating excessive noise such as vehicle horns, loud motorcycle engines, or truck air brakes can interfere with the sensor.
3. Heavy rain or water spray.
4. Wireless transmitters or mobile phones present near the sensor.
5. Sensor is covered with snow.

Detecting range may decrease when:

1. Outside air temperature is extremely hot or cold.

The following objects may not be recognized by the sensor:

1. Sharp or slim objects such as ropes, chains or small poles.
2. Objects, which tend to absorb sensor frequency such as clothes, spongy material or snow.
3. Undetectable objects smaller than 100 m (4 in) and narrower than 14 cm (5.5 in) in diameter.

✻ NOTICE

1. **The warning may not sound sequentially depending on the speed and shapes of the objects detected.**
2. **Forward/Reverse Parking Distance Warning system may malfunction if the vehicle bumper height or sensor installation has been modified. Any nonfactory installed equipment or accessories may also interfere with the sensor performance.**
3. **Sensor may not recognize objects less than 30 cm (12 in) from the sensor, or it may sense an incorrect distance. Use with caution.**
4. **When the sensor is frozen or stained with snow or water, the sensor may be inoperative until the stains are removed using a soft cloth.**
5. **Do not push, scratch or strike the sensor with any hard objects that could damage the surface of the sensor. Sensor damage could occur.**

Pay close attention when the vehicle is driven close to objects on the road, particularly pedestrians, and especially children. Be aware that some objects may not be detected by the sensors, due to the objects distance, size or material, all of which can limit the effectiveness of the sensor. Always perform a visual inspection to make sure the vehicle is clear of all obstructions before moving the vehicle in any direction.

Self-diagnosis

When you shift the gear to the R (Reverse) position and if one or more of the below occurs you may have a malfunction in Forward/Reverse Parking Distance Warning system.

- You don't hear an audible warning sound or if the buzzer sounds intermittently.
-
(blinks) is displayed. (if equipped)

If this occurs, we recommend that the system be checked by an authorized Kia dealer.

✻ NOTICE

Your new vehicle warranty does not cover any accidents or damage to the vehicle or injuries to its occupants related to Forward/Reverse Parking Distance Warning system. Always drive safely and cautiously.

LIGHTING

Battery saver function

- The purpose of this feature is to prevent the battery from being discharged if the lights are left in the ON position. The system automatically shuts off the parking lights 30 seconds after the ignition key is removed and the driver's door is opened and closed.
- With this feature, the parking lights will turn off automatically if the driver parks on the side of the road at night and opens the driver's side door.

  If necessary, to keep the parking lights on when the ignition key is removed, perform the following:

  1) Open the driver-side door.
  2) Turn the parking lights OFF and ON again using the light switch on the steering column.

Headlight escort function (if equipped)

If you turn the ignition switch to the ACC or OFF position with the headlights ON, the headlights remain on for about 5 minutes. However, if the driver's door is opened and closed, the headlights are turned off after 15 seconds.

The headlights can be turned off by pressing the lock button on the transmitter (or smart key) one more or turning the light switch to the OFF position.

Daytime running light (DRL)

The Daytime Running Lights (DRL) can make it easier for others to see the front of your vehicle during the day. DRL can be helpful in many different driving conditions, and it is especially helpful after dawn and before sunset.

The DRL system will turn the dedicated lamp OFF when:

1. The headlight switch is on
2. The engine is off
3. The front fog light is on.
4. Engaging the Parking Brake

Lighting control

OUM044055

The light switch has a Headlight and a Parking light position.

To operate the lights, turn the knob at the end of the control lever to one of the following positions:

(1) OFF position

(2) Auto light position

(3) Parking & Tail light

(4) Headlight position

Parking & Tail light ( )

OUMA046054

When the light switch is in the parking light position, the tail, license and instrument panel lights will turn ON.

Headlight position ( )

OUMA046056

When the light switch is in the headlight position, the head, tail, license lights will turn ON.

✻ NOTICE

The ignition switch must be in the ON position to turn on the headlights.

Auto light position

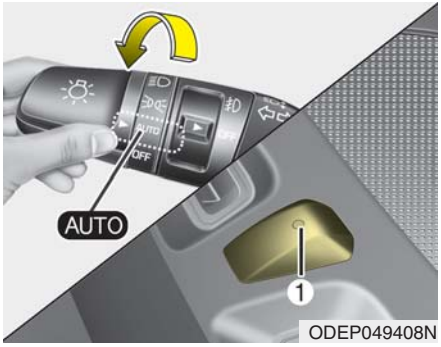

ODEP049408N

When the light switch is in the AUTO light position, the taillights and headlights will turn ON or OFF automatically depending on the amount of light outside the vehicle.

When the light switch is positioned at an auto light position, at first, the wiper will turn on and then, after 5 seconds the head lamp will turn on automatically.

If the head lamp has been turned on due to this function of the vehicle, the head lamp will turn off 60 seconds after the wiper has been turned off.

⚠ CAUTION

- ***Never place anything over the sensor (1) located on the instrument panel as this will ensure better auto-light system control.***
- ***Don't clean the sensor using a window cleaner, the cleaner may leave a light film which could interfere with sensor operation.***
- ***If your vehicle has window tint or other types of metallic coating on the front windshield, the Auto light system may not work properly.***

High beam operation

OUM044059

To turn on the high beam headlamp, push the lever away from you. The lever will return to its original position.

The high beam indicator will light when the headlight high beams are switched on.

To prevent the battery from being discharged, do not leave the lights on for a prolonged time while the engine is not running.

⚠ WARNING - High beams

Do not use high beams when there are other vehicles in front of or approaching your vehicle. Using high beams could obstruct the other driver's vision.

OUM044058

To flash the headlights, pull the lever towards you. It will return to the normal (low beam) position when released. The headlight switch does not need to be on to use this flashing feature.

High Beam Assist (HBA) (if equipped)

OUMA048554

The High Beam Assist is a system that automatically adjusts the headlamp range (switches between high beam and low beam) according to the brightness of other vehicles and road conditions.

Operating condition

1. Place the light switch in the AUTO position.
2. Turn on the high beam by pushing the lever away from you.

   The High Beam Assist ( ) indicator will illuminate.
3. High Beam Assist will turn on when vehicle speed is above 40 km/h (25 mph).
   - If the lever is pushed away when High Beam Assist is operating, High Beam Assist will turn off and the high beam will be on continuously. The High Beam Assist ( ) indicator will turn off.
   - If the lever is pulled towards you when High Beam Assist is operating, High Beam Assist will turn off.
4. If the light switch is placed to the headlamp position, High Beam Assist will turn off and the low beam will be on continuously.

The high beam switches to low beam in the below conditions.

- When High Beam Assist is off.
- When the light switch is not in the AUTO position.
- When the headlamp is detected from the on-coming vehicle.
- When the tail lamp is detected from the front vehicle.
- When the surrounding is bright enough high beams are not needed.
- When streetlights or other lights are detected.
- When vehicle speed is below 24 km/h (15 mph).
- When headlamp / taillamp of bicycle/motorcycle is detected

The system may not operate normally in the below conditions.

- When the light from the on-coming or front vehicle is not detected because of lamp damage, hidden from sight, etc.
- When the lamp of the on-coming or front vehicle is covered with dust, snow or water.
- When the light from the on-coming or front vehicle is not detected because of exhaust fume, smoke, fog, snow, etc.
- When the front window is covered with foreign matters such as ice, dust, fog, or is damaged.
- When there is a similar shape lamp with the front vehicle's lamps.
- When it is hard to see because of fog, heavy rain or snow.
- When the headlamp is not repaired or replaced at an authorized dealer.
- When headlamp aiming is not properly adjusted.
- When driving on a narrow curved road or rough road.

- When driving downhill or uphill.
- When only part of the vehicle in front is visible on a crossroad or curved road.
- When there is a traffic light, reflecting sign, flashing sign or mirror.
- When the road conditions are bad such as being wet or covered with snow.
- When the front vehicle's headlamps are off but the fog lamps on.
- When a vehicle suddenly appears from a curve.
- When the vehicle is tilted from a flat tire or being towed.
- When the Lane Keeping Assist system warning light illuminates. (if equipped)

✻ NOTICE

- **Do not place any accessories, stickers or tint the windshield.**
- **Have the windshield glass replaced from an authorized dealer.**
- **Do not remove or damage related parts of High Beam Assist system.**
- **Be careful that water doesn't get into the High Beam Assist unit.**
- **Do not place objects on the dashboard that reflect light such as mirrors, white paper, etc. The system may malfunction if sunlight is reflected.**
- **At times, High Beam Assist system may not work properly, always check the road conditions for your safety. When the system does not operate normally, manually change between the high beam and low beam.**

Turn signals and lane change signals

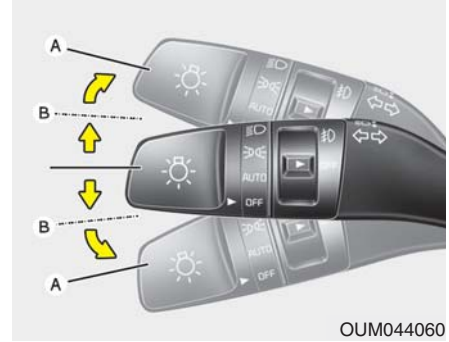

OUM044060

The ignition switch must be on for the turn signals to function. To turn on the turn signals, move the lever up or down (A). The green arrow indicators on the instrument panel indicate which turn signal is operating.

They will self-cancel after a turn is completed. If the indicator continues to flash after a turn, manually return the lever to the OFF position.

To signal a lane change, move the turn signal lever slightly and hold it in position (B). The lever will return to the OFF position when released.

If an indicator stays on and does not flash or if it flashes abnormally, one of the turn signal bulbs may be burned out and will require replacement.

✻ NOTICE

If an indicator flash is abnormally quick or slow, a bulb may be burned out or have a poor electrical connection in the circuit.

Check headlight

ODEP049575L

This warning message illuminates if there is a malfunction (burned-out bulb except LED lamp or circuit malfunction) with the headlamp. In this case, have your vehicle inspected by an authorized Kia dealer.

✻ NOTICE

- **When replacing the bulb, use the same wattage bulb.**
  For more information, refer to "BULB WATTAGE" in chapter 8.
- **If a different wattage bulb is installed on the vehicle, this warning message is not displayed.**

Front fog light (if equipped)

ODE046458N

Fog lights are designed to provide improved visibility when visibility is poor due to fog, rain or snow, etc. The fog lights will turn on when the fog light switch (1) is turned to the on position after the headlight is turned on.

To turn off the fog lights, turn the fog light switch (1) to the ON position again.

When in operation, the fog lights consume large amounts of vehicle electrical power. Only use the fog lights when visibility is poor.

WIPERS AND WASHERS

Windshield wiper/washer

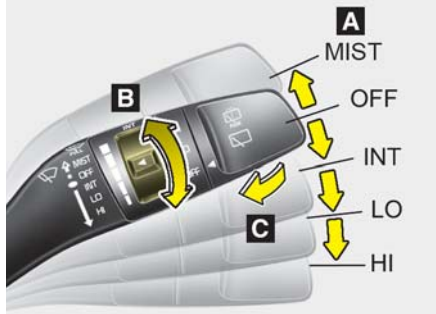

Rear window wiper/washer

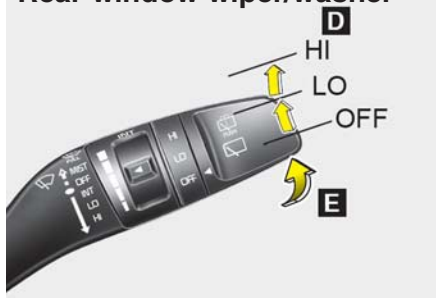

OQL045407/OQL045464

A : Wiper speed control (front)

- MIST – Single wipe
- OFF – Off
- INT – Intermittent wipe
- LO – Low wiper speed
- HI – High wiper speed

B : Intermittent control wipe time adjustment

C : Wash with brief wipes (front)*

D : Rear wiper/washer control*

- HI – Continuous wipe
- LO – Intermittent wipe*
- OFF – Off

E : Wash with brief wipes (rear)*

* if equipped

Windshield wipers

Operates as follows when the ignition switch is turned ON.

MIST : For a single wiping cycle, move the lever to this (MIST) position and release it. The wipers will operate continuously if the lever is held in this position.

OFF : Wiper is not in operation

INT : Wiper operates intermittently at the same wiping intervals. Use this mode in light rain or mist. To vary the speed setting, turn the speed control knob.

LO : Normal wiper speed

HI : Fast wiper speed

✻ NOTICE

If there is heavy accumulation of snow or ice on the windshield, defrost the windshield for about 10 minutes, or until the snow and/or ice is removed before using the windshield wipers to ensure proper operation.
If you do not remove the snow and/or ice before using the wiper and washer, it may damage the wiper and washer system.

Front windshield washers

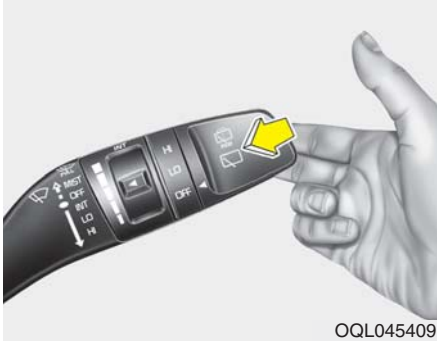

OQL045409

In the OFF position, pull the lever gently toward you to spray washer fluid on the windshield and to run the wipers 1-3 cycles.

Use this function when the windshield is dirty.

The spray and wiper operation will continue until you release the lever.

If the washer does not work, check the washer fluid level. If the fluid level is not sufficient, you will need to add appropriate non-abrasive windshield washer fluid to the washer reservoir.

The reservoir filler neck is located in the front of the engine compartment on the passenger side.

⚠ CAUTION - Washer pump

To prevent possible damage to the washer pump, do not operate the washer when the fluid reservoir is empty.

⚠ WARNING - Obscured visibility

Do not use the washer in freezing temperatures without first warming the windshield with the defrosters; the washer solution could freeze on the windshield and obscure your vision.

⚠ CAUTION - Wipers & windshields

- ***To prevent possible damage to the wipers or windshield, do not operate the wipers when the windshield is dry.***
- ***To prevent damage to the wiper blades, do not use gasoline, kerosene, paint thinner, or other solvents on or near them.***
- ***To prevent damage to the wiper arms and other components, do not attempt to move the wipers manually.***

Rear window wiper and washer switch

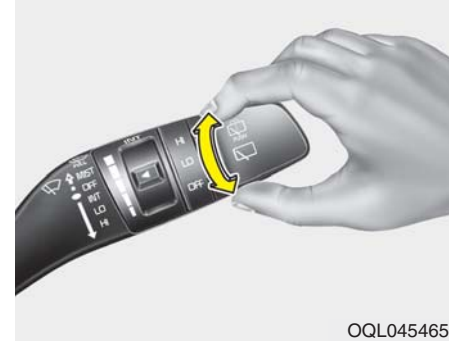

OQL045465

The rear window wiper and washer switch is located at the end of the wiper and washer switch lever. Turn the switch to the desired position to operate the rear wiper and washer.

HI : Continuous wipe

LO : Intermittent wipe

OFF : OFF

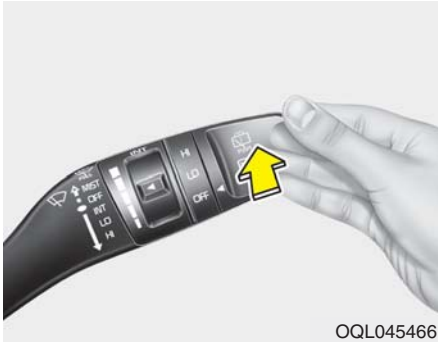

OQL045466

Push the lever away from you to spray rear washer fluid and to run the rear wipers 1 ~ 3 cycles. The spray and wiper operation will continue until you release the lever

INTERIOR LIGHTS

Do not use the interior lights for extended periods when the engine is not running.

It may cause battery discharge.

⚠ WARNING - Interior Lights

Do not use the interior lights when driving in the dark. Accidents can occur because your review may be obscured by the interior lights.

Automatic turn off function

The interior lights automatically turn off approximately 20 minutes after the ignition switch is turned off, if the lights are in the ON position.

If your vehicle is equipped with the theft alarm system, the interior lights automatically turn off approximately 5 seconds after the system is armed.

Map lamp

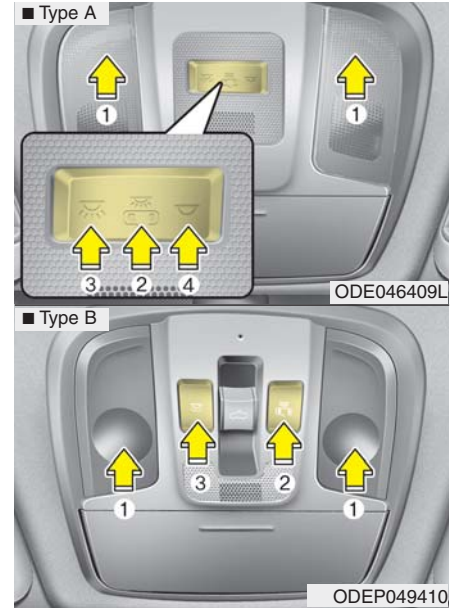

- Press the lens (1) to turn ON the map lamp.

  To turn the map lamp OFF press the lens (1) again.

- (2) : DOOR mode
- The map lamp and room lamp come on when a door is opened. The lamps go out after approximately 30 seconds.
- The map lamp and room lamp come on for approximately 30 seconds when doors are unlocked with a transmitter or smart key as long as the doors are not opened.
- The map lamp and room lamp will stay on for approximately 20 minutes if a door is opened with the ignition switch in the ACC or LOCK/OFF position.
- The map lamp and room lamp will stay on continuously if the door is opened with the ignition switch in the ON position.
- The map lamp and room lamp will go out immediately if the ignition switch is changed to the ON position or all doors are locked.
- To turn off the DOOR mode, press the DOOR button (2) once again (not pressed).

✻ NOTICE

The DOOR mode and ROOM mode can not be selected at the same time.

Front Room Lamp:

• Type A

(3): Press this switch to turn the front and rear room lamps on.

(4): Press this switch to turn the front and rear room lamps off.

• Type B

(3): Press this switch to turn the front and rear room lamps on and off.

Room lamp

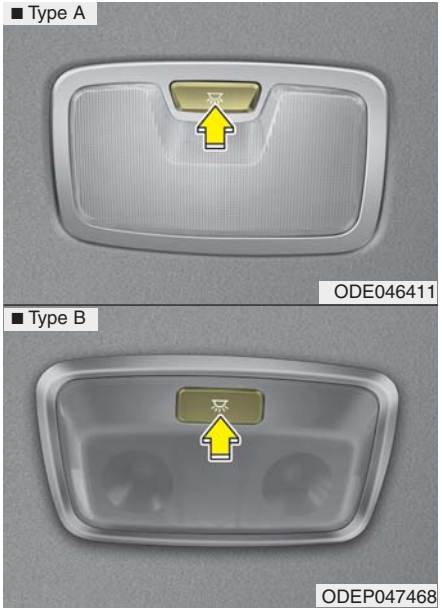

• : The light stays on at all times.

Liftgate room lamp

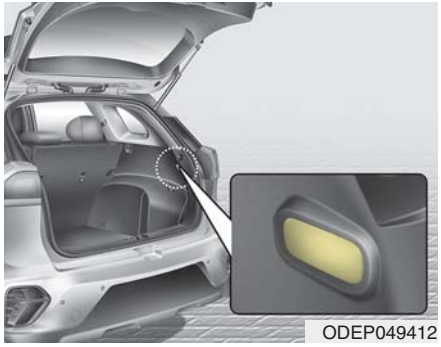
ODEP049412

The liftgate room lamp comes on when the liftgate is opened.

✻ NOTICE

The liftgate lamp comes on as long as the liftgate lid is open. To prevent unnecessary charging system drain, close the liftgate lid securely after using the liftgate.

Vanity mirror lamp

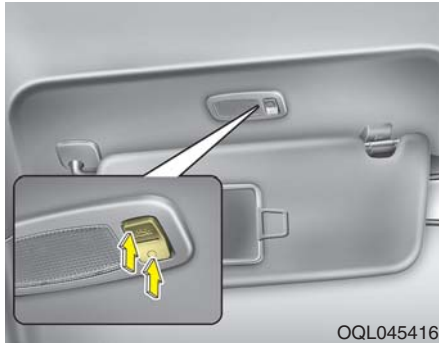
OQL045416

Push the switch to turn the light on or off.

- : The lamp will turn on if this button is pressed.
- ○ : The lamp will turn off if this button is pressed.

⚠ CAUTION - Vanity mirror lamp

Always have the switch in the off position when the vanity mirror lamp is not in use. If the sunvisor is closed without the lamp off, it may discharge the battery or damage the sunvisor.

WELCOME SYSTEM (IF EQUIPPED)

Headlight (Headlamp) escort function

The headlights (and/or taillights) remain on for approximately 5 minutes after the ignition key is removed or turned to the ACC or LOCK position. However, if the driver's door is opened and closed, the headlights are turned off after 15 seconds.

The headlights can be turned off by pressing the lock button on the transmitter or smart key twice or turning off the light switch from the headlight or Auto light position.

Interior light

When the interior light switch is in the DOOR position and all doors (and liftgate) are locked and closed, the room lamp will come on for 30 seconds if any of the below is performed.

- With the smart key system
  - When the door unlock button is pressed on the smart key.
  - When the button of the outside door handle is pressed.

At this time, if you press the door lock button, the lamps will turn off immediately.

Pocket lamp (if equipped)

When all doors are locked and closed, the pocket lamp will come on for 15 seconds if any of the below is performed.

- With the smart key system
  - When the door unlock button is pressed on the smart key.
  - When the button of the outside door handle is pressed.

At this time, if you press the door lock button, the lamps will turn off immediately.

DEFROSTER

⚠ **CAUTION - Conductors**

To prevent damage to the conductors bonded to the inside surface of the rear window, never use sharp instruments or window cleaners containing abrasives to clean the window.

If you want to defrost and defog the front windshield, refer to “Windshield defrosting and defogging” in this section.

Rear window defroster

ODE046301

The defroster heats the window to remove frost, fog and thin ice from the rear window, while the engine is running.

To activate the rear window defroster, press the rear window defroster button located in the center facia switch panel. The indicator on the rear window defroster button illuminates when the defroster is ON.

If there is heavy accumulation of snow on the rear window, brush it off before operating the rear defroster.

The rear window defroster automatically turns off after approximately 20 minutes or when the ignition switch is turned off. To turn off the defroster, press the rear window defroster button again.

Outside rearview mirror defroster

If your vehicle is equipped with the outside rearview mirror defrosters, they will operate at the same time you turn on the rear window defroster.

AUTOMATIC CLIMATE CONTROL SYSTEM

1. Driver's temperature control knob
2. AUTO (automatic control) button
3. Front windshield defroster button
4. Rear window defroster button
5. Air conditioning button
6. Air intake control button
7. OFF button
8. Fan speed control button
9. Mode selection button
10. Passenger's temperature control knob
11. SYNC temperature control selection button
12. Climate button
13. Driver only select button

✻ NOTICE

Operating the blower when the ignition switch is in the ON position could cause the battery to discharge. Operate the blower when the engine is running.

ODEP049300N

Automatic heating and air conditioning

ODE046302

1. Press the AUTO button. The modes, fan speeds, air intake and air-conditioning will be controlled automatically by setting the temperature.

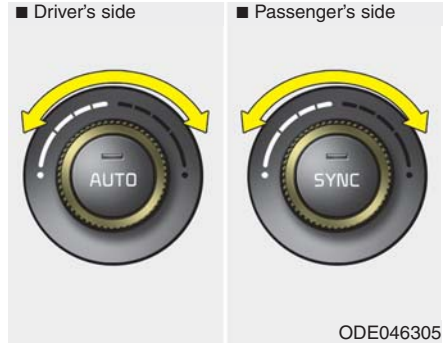

ODE046305

2. Turn the temperature control knob to the desired temperature.

✻ NOTICE

- **To turn the automatic operation off, select any button or switch of the following:**
  - **Mode selection button**
  - **Air conditioning button**
  - **Front windshield defroster button (Press the button one more time to deselect the front windshield defroster function. The 'AUTO' sign will illuminate on the information display once again.)**
  - **Air intake control button**
  - **Fan speed control switch**

  The selected function will be controlled manually while other functions operate automatically.
- **For your convenience and to improve the effectiveness of the climate control, use the AUTO button and set the temperature to 23°C (73°F).**

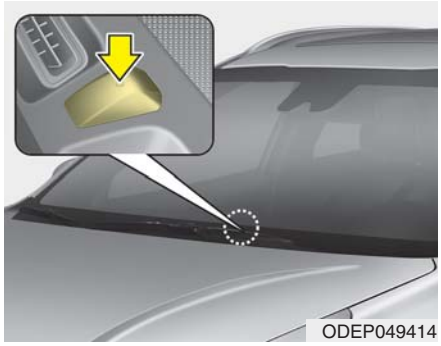

✻ NOTICE

Never place anything over the sensor located on the instrument panel to ensure better control of the heating and cooling system.

Manual heating and air conditioning

The heating and cooling system can be controlled manually by pressing buttons or turning knob(s) other than the AUTO button. In this case, the system works sequentially according to the order of buttons or knob(s) selected.

1. Start the engine.
2. Set the mode to the desired position.

   For improving the effectiveness of heating and cooling;

   - Heating:
   - Cooling:
3. Set the temperature control to the desired position.
4. Set the air intake control to the outside (fresh) air position.
5. Set the fan speed control to the desired speed.
6. If air conditioning is desired, turn the air conditioning system on.

Press the AUTO button in order to convert to full automatic control of the system.

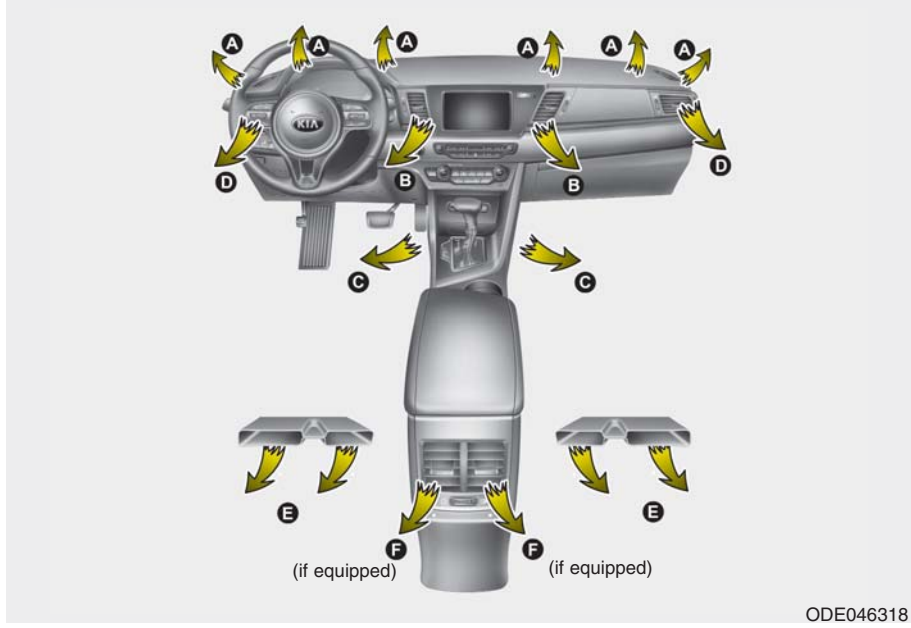

Mode selection

ODE046304

The mode selection button controls the direction of the air flow through the ventilation system.

The air flow outlet port is converted as follows:

Face-Level (B, D)

Air flow is directed toward the upper body and face. Additionally, each outlet can be controlled to direct the air discharged from the outlet.

Bi-Level (B, C, D, E, F)

Air flow is directed towards the face and the floor.

Floor-Level (A, C, D, E, F)

Most of the air flow is directed to the floor, with a small amount of the air being directed to the windshield and side window defrosters.

Floor/Defrost-Level (A, C, D, E, F)

Most of the air flow is directed to the floor and the windshield with a small amount directed to the side window defrosters.

✻ NOTICE - 2nd row outlet vents (E,F) (if equipped)

- **The air flow of the 2nd row outlet vents is controlled by the front climate control system and delivered through the inside air duct of the floor (E, F).**
- **The air flow of the 2nd row outlet vents (E, F) may be weaker than the instrument panel vents for the long air duct.**

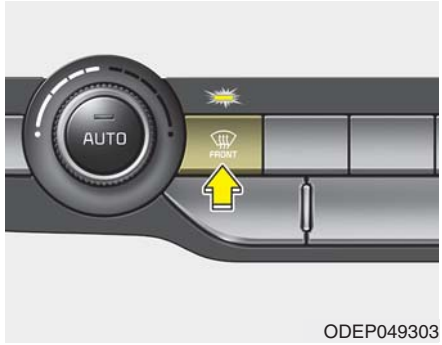

ODEP049303

Defrost-Level (A, D)

Most of the air flow is directed to the windshield with a small amount of air directed to the side window defrosters.

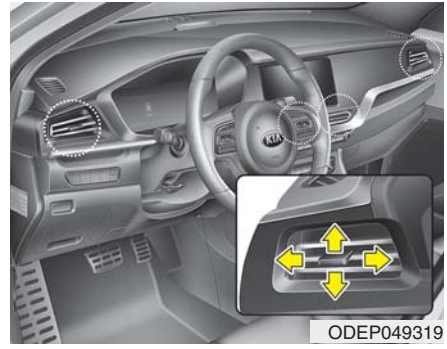
ODEP049319

Instrument panel vents

The outlet vents can be opened or closed separately using the thumb-wheel.

Also, you can adjust the direction of air delivery from these vents using the vent control lever as shown.

Temperature control

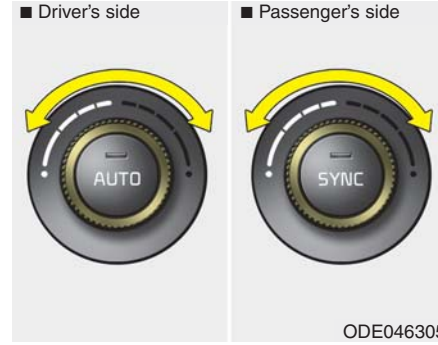

ODE046305

The temperature will increase to the maximum (HI) by turning the knob to the extreme right.

The temperature will decrease to the minimum (Lo) by turning the knob to the extreme left.

When turning the knob, the temperature will increase or decrease by 1°F/0.5°C. When set to the lowest temperature setting, the air conditioning will operate continuously.

✻ NOTICE

When starting the vehicle in cold weather using manual temperature control, operate the system in the following method to improve heating.

- **Turn off or lower the blower, right after starting the engine.**
- **Allow the engine to warm up during this time since the air flow from the heater is still cold.**
- **After a few minutes of engine warm up, turn on or set the fan to a higher level and adjust the temperature setting to hot.**

ODE046306

Adjusting the driver and passenger side temperature equally

- Press the “SYNC” button to adjust the driver and passenger side temperature equally.

  The passenger side temperature will be set to the same temperature as the driver side temperature.
- Turn the driver side temperature control knob. The driver and passenger side temperature will be adjusted equally.

Adjusting the driver and passenger side temperature individually

- Press the “SYNC” button again to adjust the driver and passenger side temperature individually. The illumination of button turns off.
- Operate the driver side temperature control knob to adjust the driver side temperature.
- Operate the passenger side temperature control knob to adjust the passenger side temperature.

Temperature conversion

You can switch the temperature mode from Centigrade to Fahrenheit as follows:

While pressing the OFF button, press the AUTO button for 3 seconds or more. The display will change from Centigrade to Fahrenheit, or from Fahrenheit to Centigrade. If the battery has been discharged or disconnected, the temperature mode display will reset to Fahrenheit.

Air intake control

ODE046307

This is used to select the outside (fresh) air position or recirculated air position.

To change the air intake control position, push the control button.

Outside (fresh) air position

With the outside (fresh) air position selected, air enters the vehicle from outside and is heated or cooled according to the function selected.

Recirculated air position

With the recirculated air position selected, air from the passenger compartment will be drawn through the heating system and heated or cooled according to the function selected.

Prolonged operation of the heater in the recirculated air position (without air conditioning selected) may cause fogging of the windshield and side windows and the air within the passenger compartment may become stale.

In addition, prolonged use of the air conditioning with the recirculated air position selected will result in excessively dry air in the passenger compartment.

Fan speed control

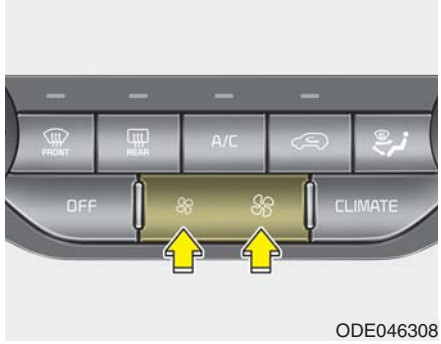

ODE046308

The fan speed can be set to the desired speed by operating the fan speed control button.

To change the fan speed, press (✤) the button for higher speed, or push (✤) the button for lower speed. To turn the fan speed control off, press the front blower OFF button.

Air conditioning

ODE046309

Press the A/C button to turn the air conditioning system on (indicator light will illuminate).

Press the button again to turn the air conditioning system off.

⚠ WARNING - Reduced Visibility

Continuous use of the climate control system in the recirculated air position may allow humidity to increase inside the vehicle which may fog the glass and obscure visibility.

⚠ WARNING - Recirculated Air

Continued use of the climate control system in the recirculated air position can cause drowsiness or sleepiness, and loss of vehicle control. Set the air intake control to the outside (fresh) air position as much as possible while driving.

⚠ WARNING - Sleeping with A/C on

Do not sleep in a vehicle with the air conditioning or heating on as this may cause serious harm or death due to a drop in your oxygen level and/or body temperature.

OFF mode

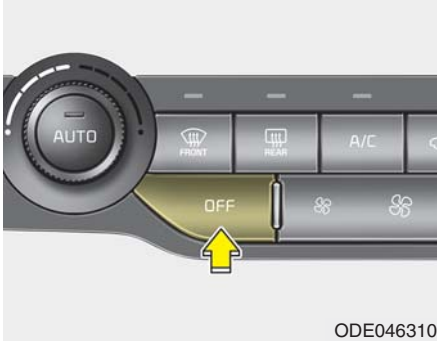

ODE046310

Press the front blower OFF button to turn off the front air climate control system. However, you can still operate the mode and air intake buttons as long as the ignition switch is in the ON position.

Climate information screen selection (if equipped)

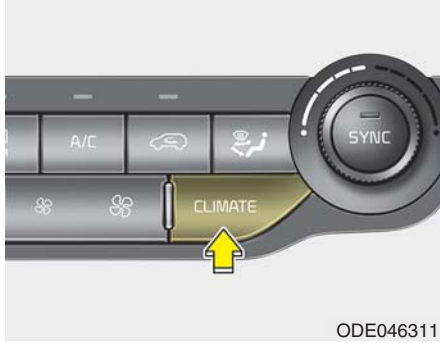

ODE046311

Press the climate information screen selection button to display climate information on the screen.

Driver Only

ODEP049312

If you press the DRIVER ONLY button( ) and the indicator light illuminates, cold air mostly blows in the direction of the driver's seat. However, some of the cold air may come out of other seats' ducts to keep indoor air pleasant.

If you use the button with no passenger in the front passenger seat, energy consumption will be reduced.

System operation

Ventilation

1. Set the mode to the position.
2. Set the air intake control to the outside (fresh) air position.
3. Set the temperature control to the desired position.
4. Set the fan speed control to the desired speed.

Heating

1. Set the mode to the position.
2. Set the air intake control to the outside (fresh) air position.
3. Set the temperature control to the desired position.
4. Set the fan speed control to the desired speed.
5. If dehumidified heating is desired, turn the air conditioning system (if equipped) on.

- If the windshield fogs up, set the mode to the or position.

Operation Tips

- To keep dust or unpleasant fumes from entering the vehicle through the ventilation system, temporarily set the air intake control to the recirculated air position. Be sure to return the control to the fresh air position when the irritation has passed to keep fresh air in the vehicle. This will help keep the driver alert and comfortable.
- Air for the heating/cooling system is drawn in through the grilles just ahead of the windshield. Care should be taken that these are not blocked by leaves, snow, ice or other obstructions.
- To prevent interior fog on the windshield, set the air intake control to the fresh air position and fan speed to the desired position, turn on the air conditioning system, and adjust the temperature control to desired temperature.

Air conditioning

All Kia Air Conditioning Systems are filled with R-1234yf refrigerant.

1. Start the engine. Press the air conditioning button.
2. Set the mode to the position.
3. Set the air intake control to the outside air or recirculated air position.
4. Adjust the fan speed control and temperature control to maintain maximum comfort.

- When maximum cooling is desired, set the temperature control to the extreme left position, set the mode control to the MAX A/C position, then set the fan speed control to the highest speed.

⚠ CAUTION - Excessive A/C Use

When using the air conditioning system, monitor the temperature gauge closely while driving up hills or in heavy traffic when outside temperatures are high. Air conditioning system operation may cause engine overheating. Continue to use the blower fan but turn the air conditioning system off if the temperature gauge indicates engine overheating.

⚠ CAUTION

When opening the windows in humid weather, air conditioning may create water droplets inside the vehicle. Since excessive water droplets may cause damage to electrical equipment, air conditioning should only be used with the windows closed.

Air conditioning system operation tips

- If the vehicle has been parked in direct sunlight during hot weather, open the windows for a short time to let the hot air inside the vehicle escape.
- To help reduce moisture inside of the windows on rainy or humid days, decrease the humidity inside the vehicle by operating the air conditioning system.
- During air conditioning system operation, you may occasionally notice a slight change in engine speed as the air conditioning compressor cycles. This is a normal system operation characteristic.
- Use the air conditioning system every month only for a few minutes to ensure maximum system performance.
- When using the air conditioning system, you may notice clear water dripping (or even puddling) on the ground under the passenger side of the vehicle. This is a normal system operation characteristic.
- Operating the air conditioning system in the recirculated air position provides maximum cooling; however, continual operation in this mode may cause the air inside the vehicle to become stale.
- During cooling operation, you may occasionally notice a misty air flow because of rapid cooling and humid air intake. This is a normal system operation characteristic.

Automatic ventilation

The system automatically selects the outside (fresh) air position when the climate control system operates over a certain period of time (5 minutes) in low temperature with the recirculated air position selected. (when floor mode or bi-level mode)

To cancel or reset the Automatic Ventilation

When the air conditioning system is on, select Face Level ( ) mode and while pressing the A/C button, press the air intake control button 5 times within 3 seconds.

When the automatic ventilation function is canceled, the indicator light blinks 3 times at an interval of 0.5 seconds.

The air intake will be automatically controlled to the fresh air position, and the flow and air conditioning will be automatically controlled.

When the automatic ventilation function is selected, the indicator light blinks 6 times at an interval of 0.25 seconds.

The air intake will be automatically controlled to the fresh air position, and the flow and air conditioning will be automatically controlled.

After the battery has been discharged or separated, the automatic ventilation function will be reset, so please selected, according to you preference.

Sunroof inside air recirculation (if equipped)

The outside (fresh) air position is automatically selected when the sunroof is opened.

When you select the recirculated air position, the system maintains the recirculated air position for 3 minutes and then automatically converts to the outside (fresh) air position.

When the sunroof is closed, the air intake position will return to the original position that was selected.

Recirculated air at washer fluid spray

To prevent the odor from entering to inside the vehicle, the ventilation system changes to Recirculated Air Mode for a while when the windshield washer fluid sprayed. However, at low outside temperature, to prevent from windshield fogging, the system continues to outside air mode.

System setting

1. ENGINE START/STOP button is On or ignition switch ON.
2. Select Floor-Level ( ) air flow direction by pressing Mode Selection button.
3. With pressing Air Conditioning button, press the Recirculated Air button more than 4 times within 2 seconds.
4. If the system is set up, the indicator on Recirculated Air button will blinks 6 times.

System cancellation

1. ENGINE START/STOP button is On or ignition switch ON.
2. Select Floor-Level ( ) air flow direction by pressing Mode Selection button.
3. With pressing Air Conditioning button, press the Recirculated Air button more than 4 times within 2 seconds.
4. If the system is cancelled, the indicator on Recirculated Air button will blinks 3 times.

Climate control air filter (if equipped)

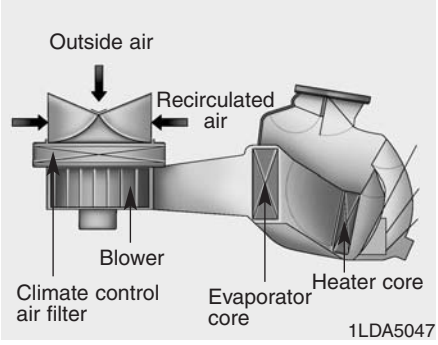

The climate control air filter installed behind the glove box filters the dust or other pollutants that come into the vehicle from the outside through the heating and air conditioning system. If dust or other pollutants accumulate in the filter over a period of time, the air flow from the air vents may decrease, resulting in moisture accumulation on the inside of the windshield even when the outside (fresh) air position is selected. If this happens, have the climate control air filter replaced by an authorized Kia dealer.

✻ NOTICE

- **Replace the filter according to the Maintenance Schedule.**
  If the vehicle is being driven in severe conditions such as dusty or rough roads, more frequent air conditioner filter inspections and changes are required.
- **When the air flow rate suddenly decreases, the system should be checked at an authorized Kia dealer.**

⚠ CAUTION - AC Repair

It is important that the correct type and amount of oil and refrigerant is used, otherwise damage to the vehicle may occur. To prevent damage, the air conditioning system in your vehicle should only be serviced by trained and certified technicians.

Checking the amount of air conditioner refrigerant and compressor lubricant

When the amount of refrigerant is low, the performance of the air conditioning is reduced. Overfilling also has a negative impact on the air conditioning system.

Therefore, if abnormal operation is found, have the system inspected by an authorized Kia dealer.

⚠ WARNING - Vehicles equipped with R-1234yf

Since the refrigerant is mildly flammable and operated at high pressure, the air conditioning system should only be serviced by trained and certified technicians. (Refer to the SAE J2845)

It is important that the correct type and amount of oil and refrigerant are used.

All refrigerants should be reclaimed with proper equipment.

Venting refrigerants directly to the atmosphere is harmful to individuals and environment.

Failure to heed these warnings can lead to serious injuries.

WINDSHIELD DEFROSTING AND DEFOGGING

⚠ WARNING - Windshield heating

Do not use the or position during cooling operation in extremely humid weather. The difference between the temperature of the outside air and the windshield could cause the outer surface of the windshield to fog up, causing loss of visibility. If this occurs, set the mode selection to the position and fan speed control to the lower speed.

- For maximum defrosting, set the temperature control to the extreme right/hot position and the fan speed control to the highest speed.
- If warm air to the floor is desired while defrosting or defogging, set the mode to the floor-defrost position.
- Before driving, clear all snow and ice from the windshield, rear window, outside rear view mirrors, and all side windows.
- Clear all snow and ice from the hood and air inlet in the cowl grill to improve heater and defroster efficiency and to reduce the probability of fogging up the inside of the windshield.

Automatic climate control system

To defog inside windshield

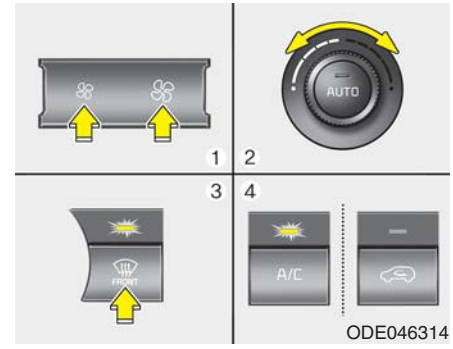

1. Set the fan speed to the desired position.
2. Select desired temperature.
3. Press the defroster button ( ).
4. The outside (fresh) air position will be selected automatically and the air conditioning will turn on according to the detected ambient temperature.

If the air conditioning and outside (fresh) air position are not selected automatically, adjust the corresponding button manually. If the position is selected, lower fan speed is adjusted to a higher fan speed.

To defrost outside windshield

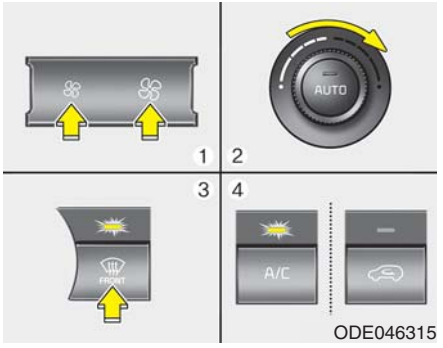

1. Set the fan speed to the highest position.
2. Set the temperature to the extreme hot (HI) position.
3. Press the defroster button ( ).
4. The outside (fresh) air position will be selected automatically and the air conditioning will turn on according to the detected ambient temperature.

Defogging logic

To reduce the possibility of fogging up the inside of the windshield, the air intake or air conditioning is controlled automatically according to certain conditions such as or position. To cancel automatic defogging logic or return to the automatic defogging logic, do the following.

Automatic climate control system

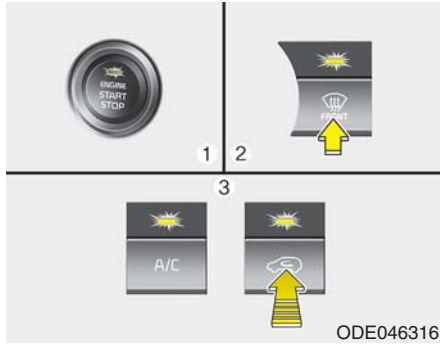

ODE046316

1. Turn the ignition switch to the ON position.
2. Press the defroster button ( ).
3. While pressing the air conditioning button (A/C), press the air intake control button at least 5 times within 3 seconds.

The recirculation indicator blinks 3 times with 0.5 second of interval. It indicates that the defogging logic is canceled or returned to the programmed status.

If the battery has been discharged or disconnected, it resets to the defog logic status.

Auto defogging system

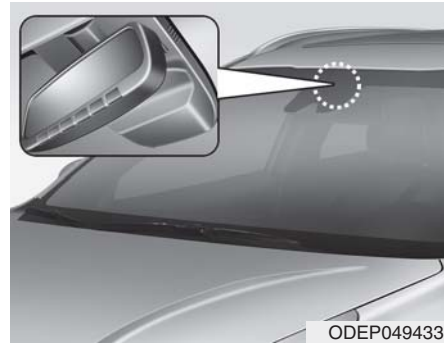
ODEP049433

Auto defogging reduces the probability of fogging up the inside of the windshield by automatically sensing the moisture of inside the windshield.

The auto defogging system operates when the heater or air conditioning is on.

This indicator illuminates when the auto defogging system senses the moisture on the inside of the windshield and operates.

If more moisture is in the vehicle, higher steps operate as follow. For example if auto defogging does not defog inside the windshield at step 1 Outside air position, it tries to defog again at step 2 Operating the air conditioning.

Step 1 : Outside air position

Step 2 : Operating the air conditioning

Step 3 : Blowing air flow toward the windshield

Step 4 : Increasing air flow toward the windshield

To cancel or reset the Auto Defogging System

Press the front windshield defroster button for 3 seconds when the ignition switch is in the ON position.

When the ADS system is canceled, ADS OFF symbol will blink 3 times per 0.5 sec and ADS OFF will be displayed on the climate control information screen.

When the ADS system is reset, ADS OFF symbol will blink 6 times per 0.25 sec and ADS OFF will be disappear on the climate control information screen.

⚠ **CAUTION**

Do not remove the sensor cover located on the upper end of the passenger side windshield glass. Damage to the system parts could occur and may not be covered by your vehicle warranty.

STORAGE COMPARTMENTS

These compartments can be used to store small items required by the driver or passengers.

- To avoid possible theft, do not leave valuables in the storage compartment.
- Always keep the storage compartment covers closed while driving. Do not attempt to place so many items in the storage compartment that the storage compartment cover can not close securely.

⚠ WARNING - Flammable materials

Do not store propane cylinders or other flammable/explosive materials in the vehicle. These items may catch fire and/or explode if the vehicle is exposed to hot temperatures for extended periods.

Center console storage

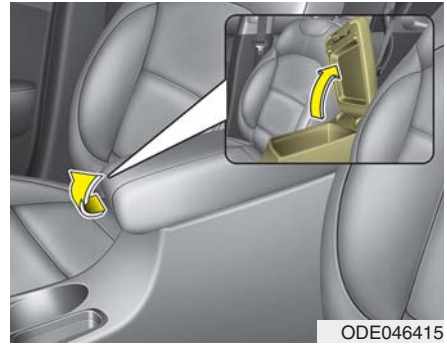

To open the center console storage, pull up the lever.

Glove box

To open the glove box, push the lever and the glove box will automatically open. Close the glove box after use.

⚠ WARNING - Glove Box

To reduce the risk of injury in an accident or sudden stop, always keep the glove box door closed while driving.

✻ NOTICE

If the temperature control knob is in the warm or hot position, warm or hot air will flow into the glove box.

Sunglass holder

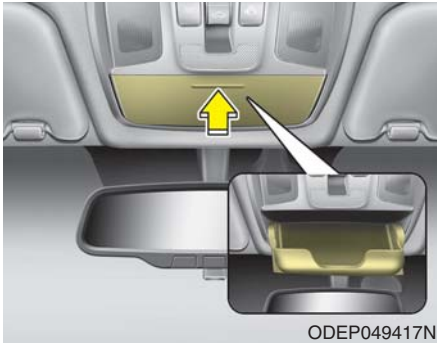

To open the sunglass holder, press the cover and the holder will slowly open. Place your sunglasses with the lenses facing out.

To close the sunglass holder push it up.

⚠ WARNING - Sunglass holder

- **Do not keep objects except sunglasses inside the sunglass holder. Such objects can be thrown from the holder in the event of a sudden stop or an accident, possibly injuring the passengers in the vehicle.**
- **Do not open the sunglass holder while the vehicle is moving. The rear view mirror of the vehicle can be blocked by an opened sunglass holder.**

Luggage box (if equipped)

You can place tools, etc. in the box for easy access.

Grasp the handle (1) on the edge of the cover and lift it.

INTERIOR FEATURES

Cup holder

⚠ WARNING - Hot liquids

Do not place uncovered cups with hot liquid in the cup holder while the vehicle is in motion. If the hot liquid spills, you may burn yourself. Such a burn to the driver could lead to loss of control of the vehicle.

⚠ CAUTION

- ***Keep your drinks sealed while driving to prevent spilling your drink. If liquid spills, it may get into the vehicle's electrical/electronic system and damage electrical/electronic parts.***
- ***When cleaning spilled liquids, do not use heat to dry the cup holders. This may damage the cup holder.***

■ Front seat

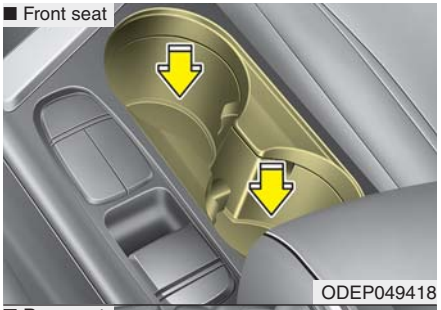

ODEP049418

■ Rear seat

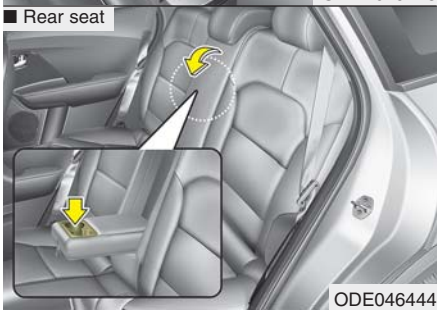

ODE046444

Cups or small beverage cans may be placed in the cup holders.

Seat warmer (if equipped)

■ Front seat

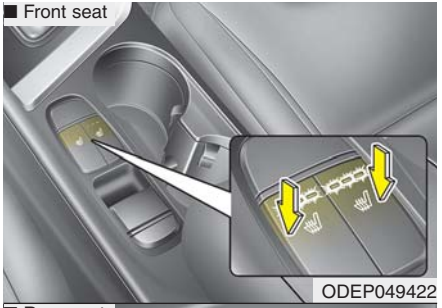

ODEP049422

■ Rear seat

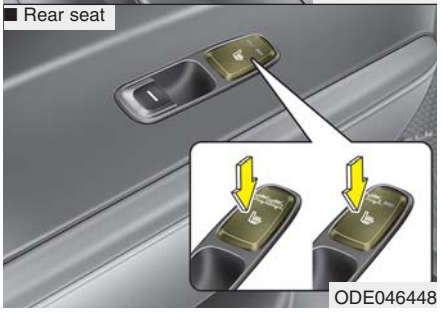

ODE046448

The seat warmer is provided to warm the front seats during cold weather. With the ignition switch in the ON position, push either of the switches to warm the driver's seat or the front passenger's seat.

During mild weather or under conditions where the operation of the seat warmer is not needed, keep the switches in the “OFF” position.

▶ Temperature control (Manual)

- Each time you press the switch, the temperature setting of the seat will change as follows :

■ Front seat

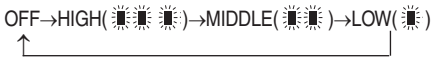

■ Rear seat

- The seat warmer defaults to the OFF position whenever the ignition switch is turned on.

▶ Temperature control(Automatic)

The seat warmer starts to automatically control the seat temperature in order to prevent low-temperature burns after being manually turned ON.

■ Front seat

■ Rear seat

You may manually press the button to increase the seat temperature. However, it soon returns to the automatic mode again when pressing the switch for more than 1.5 seconds with the seat warmer operating, the seat warmer will turn OFF. The seat warmer defaults to the OFF position whenever the Engine Start/Stop button is in the ON position.

✻ NOTICE

With the seat warmer switch in the ON position, the heating system in the seat turns off or on automatically depending on the seat temperature.

⚠ WARNING - Seat warmer burns

The seat warmer may cause burns, even at low temperatures, if used over a long period of time. Never allow passengers who may not be able to take care of themselves to be exposed to the risk of seat heater burns. These include:

1. **Infants, children, elderly or disabled persons, or hospital outpatients**
2. **Persons with sensitive skin or those that burn easily**
3. **Fatigued individuals**
4. **Intoxicated individuals**
5. **Individuals taking medication that can cause drowsiness or sleepiness (sleeping pills, cold tablets, etc.)**

Air ventilation seat (if equipped)

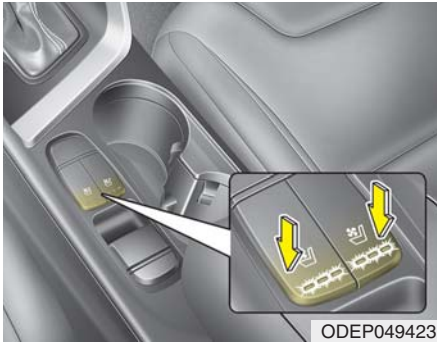
ODEP049423

The temperature setting of the seat changes according to the switch position.

- If you want to ventilate your seat cushion, press the switch (blue color).
- Each time you press the button, the airflow will change as follows:

OFF→HIGH( )→MIDDLE( )→LOW( )

- The seat warmer (with air ventilation) defaults to the OFF position whenever the ignition switch is turned on.

⚠ CAUTION - Seat damage

- ***When cleaning the seats, do not use an organic solvent such as paint thinner, benzene, alcohol and gasoline. Doing so may damage the air ventilation seat.***
- ***Do not place heavy or sharp objects on the seat. Those things may damage the air ventilation seat.***
- ***Be careful not to spill liquid such as water or beverages on the seat. If you spill some liquid, wipe the seat with a dry towel. Before using the air ventilation seat, dry the seat completely.***

Sunvisor

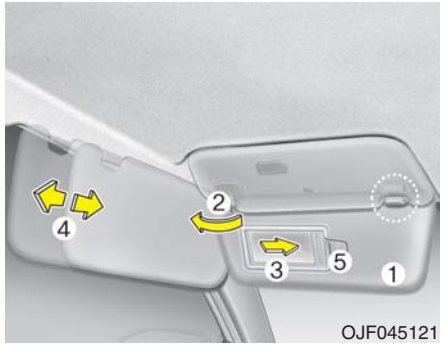

OJF045121

Use the sunvisor to shield direct light through the front or side windows.

To use the sunvisor, pull it downward.

To use the sunvisor for the side window, pull it downward, unsnap it from the bracket (1) and swing it to the side (2).

To use the vanity mirror, pull down the visor and slide the mirror cover (3).

Adjust the sunvisor extension forward or backward (4).

The ticket holder (5) is provided for holding a tollgate ticket.

* The actual sunvisor lamp in the vehicle may differ from the illustration.

⚠ CAUTION - Vanity mirror lamp

If you use the vanity mirror lamp, turn off the lamp before returning the sunvisor to its original position, otherwise it could result in battery discharge and possible sunvisor damage.

Power outlet (if equipped)

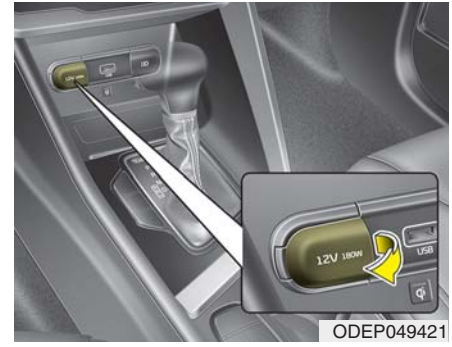

ODEP049421

The power outlet is designed to provide power for mobile telephones or other devices designed to operate with vehicle electrical systems. The devices should draw less than 10 amps with the engine running.

- Use the power outlet only when the engine is running and remove the accessory plug after use. Using the accessory plug for prolonged periods of time with the engine off could cause the battery to discharge.

- Only use 12V electric accessories which are less than 10A in electric capacity.
- Adjust the air-conditioner or heater to the lowest operating level when using the power outlet.
- Close the cover when not in use.
- Some electronic devices can cause electronic interference when plugged into a vehicle's power outlet. These devices may cause excessive audio static and malfunctions in other electronic systems or devices used in your vehicle.
- Push the plug in as far as it will go. If good contact is not made, the plug may overheat and the fuse may open.
- Plug in battery equipped electronic devices with reverse current protection. The current from the battery may flow into the vehicle's electri cal/electronic system and cause system malfunction.

⚠ WARNING - Electric shock

Do not put a finger or a foreign object (pen, etc.) into a power outlet and do not touch with a wet hand. You may receive an electric shock.

USB charger (if equipped)

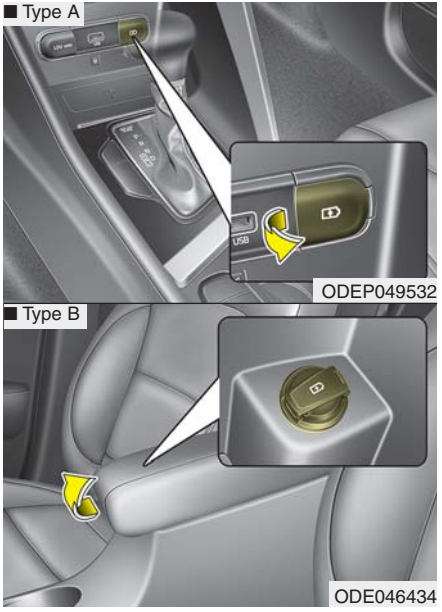

The USB charger is designed to recharge batteries of small size electrical devices using a USB cable. The electrical devices can be recharged when the Engine Start/Stop button is in ACC/ON/START position.

The battery charging state may be monitored on the electrical device. Disconnect the USB cable from the USB port after use.

- Some devices are not supported for fast charging but will be charged with normal speed.
- Use the USB charger when the engine is running to prevent battery discharge.
- Only devices that fit the USB port can be used.
- The USB charger can be used only for battery charging purposes.
- Battery chargers cannot be charged.

AC inverter (if equipped)

ODE046034N

The AC inverter supplies 115V/150W electric power to operate electric accessories or equipment.

If you wish to use the AC inverter, open up the AC inverter cover and connect a plug to it. The AC inverter supplies electric power when engine is running.

✻ NOTICE

- **Rated voltage : AC 115V**
- **Maximum electric power : 150W**
- **In order to avoid an electrical system failure, electric shock, etc., be sure to read owner's manual before use.**
- **Be sure to close the cover except for when in use.**

- To prevent the battery from being discharged, do not use the AC inverter while the engine is not running.
- After using an electric accessory or equipment, pull the plug out. Leaving the accessory or equipment plugged in for a long time may cause battery discharge.
- Do not use an electric accessory or equipment the power consumption of which is greater than 150W (115V).
- When the AC inverter input voltage is less than 11.3V, the power will be automatically turned off.

  AC inverter will operate as normal when the voltage is increased.

- While the power consumption of some electrical devices/appliances may be within the AC inverter's electric power range, it may malfunction in below cases.

  - If the device/appliance requires high electric power for initial start up
  - If the device/appliance processes precise/very accurate data
  - If the device/appliance requires very stable supply of electricity

⚠ **CAUTION - Electric accessory devices**

- ***Do not use broken electric accessories which may damage the AC inverter and electrical systems of the vehicle.***
- ***Do not use two or more electric accessories at the same time as this may cause damage to the electrical systems of the vehicle.***

Wireless smart phone charging system (if equipped)

ODEP049424

A wireless smart phone charging system is located in front of the center console

Firmly close all doors, and turn the ignition to ACC or IGN ON. To start wireless charging, place the smart phone equipped with wireless charging function on the wireless charging pad.

For best wireless charging results, place the smart phone on the center of the charging pad.

The wireless charging system is designed for one smart phone equipped with QI per single usage only. Please refer to the smart phone accessory cover or the smart phone manufacturer homepage to check whether your smart phone supports QI function.

Wireless smart phone charging

1. Remove any object on the smart phone charging pad including the smart key. If there is any foreign object on the pad other than a smart phone, the wireless charging function may not operate properly.
2. Place the smart phone on the center of the wireless charging pad.
3. The indicator light will change to orange once the wireless charging begins. After the charging is complete, the orange light will change to green.
4. You can choose to turn the wireless charging function to either ON or OFF by selecting the USM on the instrument cluster. (Please refer to “Instrument Cluster” for details).

If the wireless charging does not work, gently move your smart phone around the pad until the charging indicator light turns orange.

Depending on the smart phone, the charging indicator light may not turn green even after the charging is complete.

If the wireless charging is not functioning properly, the orange light will blink and flash for ten seconds then turn off. In such cases, remove the smart phone from the pad and replace it on the pad again, or double check the charging status.

If you leave the smart phone on the charging pad when the vehicle ignition is in OFF, the vehicle will alert you through warning messages and sound (applicable for vehicles with voice guidance function) after the ‘Good bye’ function on the instrument cluster ends.

⚠ WARNING - Distracted driving

Driving while distracted can result in a loss of vehicle control that may lead to an accident, severe personal injury, and death. The driver's primary responsibility is in the safe and legal operation of a vehicle, and any handheld devices, other equipment, or vehicle systems which take the driver's eyes, attention and focus away from the safe operation of a vehicle or which are not permissible by law should never be used during operation of the vehicle.

⚠ CAUTION - Liquid in Wireless Smart Phone Charger

To prevent liquid from damaging the wireless smart phone charging system in your vehicle, be sure not to spill liquid over the charging system when charging your phone.

⚠ CAUTION - Metal in Wireless Charging System

If any metallic object such as a coin is located between the wireless charging system and the smart phone, the charging may be disrupted. Also, the metallic object may heat up and potentially damage the charging system. If there is any metallic object between the smart phone and the charging pad, immediately remove the smart phone. Remove the metallic object after it has cooled down.

✻ NOTICE

- **When the interior temperature of the wireless charging system rises above a set temperature, the wireless charging will cease to function. After the interior temperature drops below the threshold, the wireless charging function will resume.**
- **The wireless charging may not function properly when there is a heavy accessory cover on the smart phone.**
- **The wireless charging will stop when using the wireless smart key search function to prevent radio wave disruption.**
- **The wireless charging will stop when the smart key is moved out of the vehicle with the ignition in ON.**
- **The wireless charging will stop when any of the doors is opened (applicable for vehicles equipped with smart keys).**

(Continued)

(Continued)

- **The wireless charging will stop when the vehicle is turned OFF.**
- **The wireless charging will stop when the smart phone is not in complete contact with the wireless charging pad.**
- **Items equipped with magnetic components such as credit card, telephone card, bankbook or any transportation ticket may become damaged during wireless charging.**
- **Place the smart phone on the center of the charge pad for best results. The smart phone may not charge when placed near the rim of the charging pad. When the smart phone does get charged, it may heat up excessively.**
- **For smart phones without built-in wireless charging system, an appropriate accessory has to be equipped in order to use the vehicle's wireless charging system.**

(Continued)

(Continued)

- **Smart phones of some manufacturers may display messages on weak current. This is due to the particular characteristic of the smart phone and does not imply a malfunction on wireless charging function.**
- **The indicator light of some manufacturers' smart phones may still be orange after the smart phone is fully charged. This is due to the particular characteristic of the smart phone and not a malfunction of the wireless charging.**
- **When any smart phone without a wireless charging function or a metallic object is placed on the charging pad, a small noise may sound. This small sound is due to the vehicle discerning compatibility of the object placed on the charging pad. It does not affect your vehicle or the smart phone in any way.**

This device complies with Industry Canada licence-exempt RSS standard(s).

Operation is subject to the following two conditions:

(1) This device may not cause interference, and

(2) This device must accept any interference, including interference that may cause undesired operation of the device.

Clothes hanger

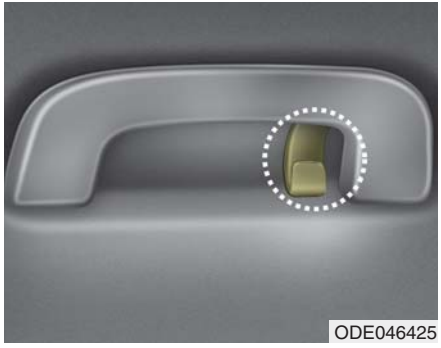

❊ This actual feature may differ from the illustration.

A Coat hook is next to the rear grab handle.

⚠ CAUTION - Hanging clothing

Do not hang heavy clothes, since they may damage the hook.

⚠ WARNING

Do not hang other objects such as hangers or hard objects from the clothes hanger. Also, do not put heavy, sharp or breakable objects in the clothing's pockets. In an accident or when the curtain air bag is inflated, it may cause vehicle damage or personal injury.

Floor mat anchor(s) (if equipped)

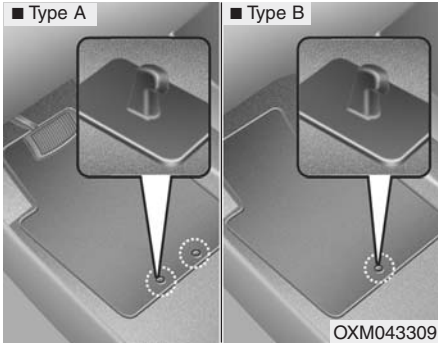

When using a floor mat on the front floor carpet, make sure it attaches to the floor mat anchor(s) in your vehicle. This keeps the floor mat from sliding forward.

⚠ WARNING - After market floor mat

Do not install aftermarket floor mats that are not capable of being securely attached to the vehicle's floor mat anchors.

Unsecured floor mats can interfere with pedal operation.

The following must be observed when installing ANY floor mat to the vehicle.

- Ensure that the floor mats are securely attached to the vehicle's floor mat anchor(s) before driving the vehicle.
- Do not use ANY floor mat that cannot be firmly attached to the vehicle's floor mat anchors.
- Do not stack floor mats on top of one another (e.g. all-weather rubber mat on top of a carpeted floor mat). Only a single floor mat should be installed in each position.

✻ NOTICE

Your vehicle was manufactured with driver's side floor mat anchors that are designed to securely hold the floor mat in place. To avoid any interference with pedal operation, Kia recommends that only the Kia floor mat designed for use in your vehicle be installed.

Luggage net holder

ODE046426N

To keep items from shifting in the cargo area, you can use the holders located in the cargo area to attach the luggage net.

If necessary, we recommend that you contact an authorized Kia dealer.

⚠ CAUTION

To prevent damage to the vehicle, care should be taken when carrying fragile or bulky objects in the luggage compartment.

⚠ WARNING - Luggage net

Always keep your face and body out of the luggage net recoil path and avoid using the luggage net when the straps have visible signs of wear or damage. The luggage net can snap and cause injuries.

Cargo security screen (if equipped)

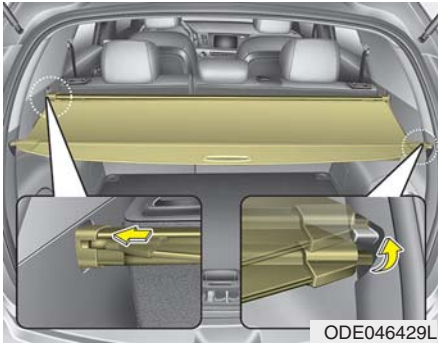

Use the cargo security screen to hide items stored in the cargo area.

To use the cargo security screen, pull the handle backward and insert the edges into the slots.

⚠ WARNING - Cargo Security Screen

Do not place objects on the cargo security screen. Such objects may be thrown about inside the vehicle and possibly injure vehicle occupants during an accident or when braking.

⚠ CAUTION

Do not place luggage on the cargo security screen. This may cause the security screen to become damaged or malformed.

EXTERIOR FEATURES

Roof rack (if equipped)

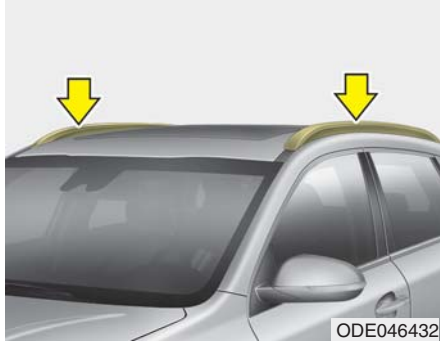

If the vehicle has a roof rack, you can load cargo on top of your vehicle.

Crossbars and fixing components can be installed on the roof rack when carrying cargo. Those may be obtained from an authorized Kia dealer.

✻ NOTICE

- **The crossbars (if equipped) should be placed in the proper load carrying positions prior to placing items onto the roof rack.**
- **If the vehicle is equipped with a sunroof, be sure not to position cargo onto the roof rack in such a way that it could interfere with sunroof operation.**
- **When the roof rack is not being used to carry cargo, the crossbars may need to be repositioned if wind noise is detected.**

⚠ CAUTION - Loading Roof Rack

- ***When carrying cargo on the roof rack, take the necessary precautions to make sure the cargo does not damage the roof of the vehicle.***
- ***When carrying large objects on the roof rack, make sure they do not exceed the overall roof length or width.***
- ***When you are carrying cargo on the roof rack, do not operate the sunroof (if equipped). This can damage the sunroof.***

- The following specification is the maximum weight that can be loaded onto the roof rack. Distribute the load as evenly as possible across the crossbars (if equipped) and roof rack and secure the load firmly.

ROOF RACK	100 kg (220 lbs.) EVENLY DISTRIBUTED

  Loading cargo or luggage in excess of the specified weight limit on the roof rack may damage your vehicle.
- The vehicle center of gravity will be higher when items are loaded onto the roof rack. Avoid sudden starts, braking, sharp turns, abrupt maneuvers or high speeds that may result in loss of vehicle control or rollover resulting in an accident.
- Always drive slowly and turn corners carefully when carrying items on the roof rack. Severe wind updrafts, caused by passing vehicles or natural causes, can cause sudden upward pressure on items loaded on the roof rack. This is especially true when carrying large, flat items such as wood panels or mattresses. This could cause the items to fall off the roof rack and cause damage to your vehicle or others around you.
- To prevent damage or loss of cargo while driving, check frequently before or while driving to make sure the items on the roof rack are securely fastened.

⚠ WARNING - Driving with roof load

Always drive slowly and turn corners carefully when carrying items on the roof rack. The vehicle's center of gravity will be higher when items are loaded onto the roof rack.

INFOTAINMENT SYSTEM

✻ NOTICE

If you install an after market HID head lamp, your vehicle's audio and electronic device may malfunction.

✻ If your vehicle is equipped with Infotainment system, refer to a separately supplied manual for detailed information.

Antenna

Shark fin antenna

The shark fin antenna will receive the transmit data.

USB port

You can use an USB port to plug in an USB.

How vehicle radio works

FM reception

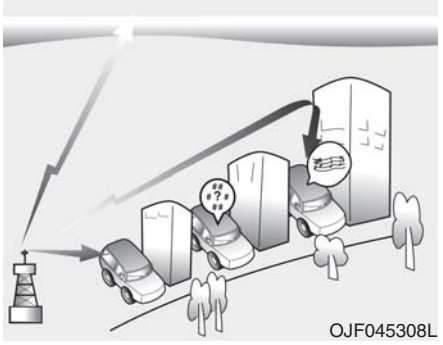

AM and FM radio signals are broadcast from transmitter towers located around your city. They are intercepted by the radio antenna on your vehicle. This signal is then processed by the radio and sent to your vehicle speakers.

However, in some cases the signal coming to your vehicle may not be strong and clear.

This can be due to factors such as the distance from the radio station, closeness of other strong radio stations or the presence of buildings, bridges or other large obstructions in the area.

AM reception

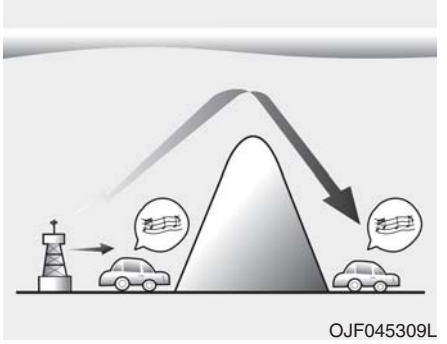

AM broadcasts can be received at greater distances than FM broadcasts. This is because AM radio waves are transmitted at low frequencies. These long distance,low frequency radio waves can follow the curvature of the earth rather than travelling straight. In addition, they curve around obstructions resulting in better signal coverage.

FM radio station

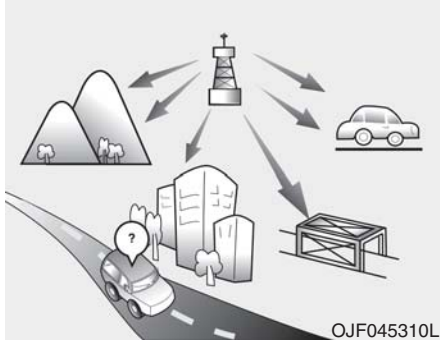

FM broadcasts are transmitted at high frequencies and do not bend to follow the earth's surface. Because of this, FM broadcasts generally begin to fade within short distances from the station. Also, FM signals are easily affected by buildings, mountains, and obstructions. This can lead to undesirable or unpleasant listening conditions which might lead you to believe a problem exists with your radio. The following conditions are normal and do not indicate radio trouble:

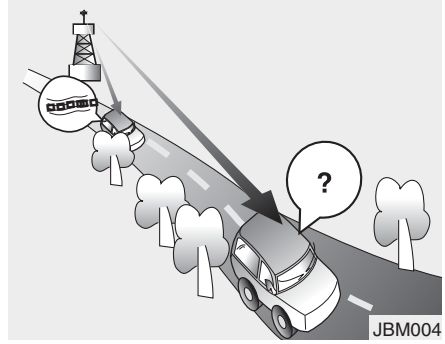

- Fading - As your vehicle moves away from the radio station, the signal will weaken and sound will begin to fade. When this occurs, we suggest that you select another station with a stronger signal.
- Flutter/Static - Weak FM signals or large obstructions between the transmitter and your radio can disturb the signal causing static or fluttering noises to occur. Reducing the treble level may lessen this effect until the disturbance clears.

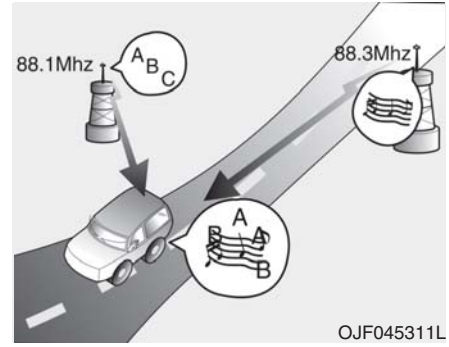

- Station Swapping - As an FM signal weakens, another more powerful signal near the same frequency may begin to play. This is because your radio is designed to lock onto the clearest signal. If this occurs, select another station with a stronger signal.
- Multi-Path Cancellation - Radio signals being received from several directions can cause distortion or fluttering. This can be caused by a direct and reflected signal from the same station, or by signals from two stations with close frequencies. If this occurs, select another station until the condition has passed.

Using a cellular phone or a two-way radio

When a cellular phone is used inside the vehicle, noise may be produced from the audio system. This does not mean that something is wrong with the audio equipment. In such a case, try to operate mobile devices as far from the audio equipment as possible.

When using a communication system such as a cellular phone or a radio set inside the vehicle, a separate external antenna must be fitted. When a cellular phone or a radio set is used with an internal antenna alone, it may interfere with the vehicle's electrical system and adversely affect safe operation of the vehicle.

⚠ WARNING - Cell phone use

Do not use a cellular phone while driving. Stop at a safe location to use a cellular phone.

⚠ WARNING - Distracted driving

Driving while distracted can result in a loss of vehicle control that may lead to an accident, severe personal injury, and death. The driver's primary responsibility is in the safe and legal operation of a vehicle, and use of any handheld devices, other equipment, or vehicle systems which take the driver's eyes, attention and focus away from the safe operation of a vehicle or which are not permissible by law should never be used during operation of the vehicle.

Declaration of Conformity

IC

This device complies with Industry Canada's licence-exempt RSSs.

Operation is subject to the following two conditions:

(1) This device may not cause interference; and

(2) This device must accept any interference, including interference that may cause undesired operation of the device.

Le présent appareil est conforme aux CNR d'Industrie Canada applicables aux appareils radio exempts de licence.

L'exploitation est autorisée aux deux conditions suivantes: (1) l'appareil ne doit pas produire de brouillage, et (2) l'utilisateur de l'appareil doit accepter tout brouillage radioélectrique subi, même si le brouillage est susceptible d'en compromettre le fonctionnement.

Driving your vehicle

Before driving 5-5
- Before entering vehicle 5-5
- Necessary inspections 5-5
- Before starting 5-5

Key positions 5-7
- Illuminated ignition switch 5-7
- Ignition switch position 5-7
- Starting the hybrid system 5-9

ENGINE START/STOP button 5-11
- Illuminated ENGINE START/STOP button 5-11
- ENGINE START/STOP button position 5-11
- Starting the hybrid system 5-13

Dual Clutch Transmission (DCT) 5-16
- Dual clutch transmission operation 5-16
- Good driving practices 5-25

Regenerative braking system 5-27
- Regenerative Braking (Paddle Shifter) 5-27

Brake system 5-30
- Power brakes 5-30
- Parking brake – Foot type 5-32
- Electronic Parking Brake (EPB) 5-34
- Auto hold 5-40
- Warning messages 5-42
- Anti-lock Brake System (ABS) 5-44
- Electronic Stability Control (ESC) 5-46
- Vehicle Stability Management (VSM) 5-50
- Hill-start Assist Control (HAC) 5-51
- Good braking practices 5-52

Forward Collision-Avoidance Assist (FCA) (sensor fusion) 5-53
- System setting and activation 5-53
- FCA warning message and system control 5-56
- Brake operation 5-58
- Detecting sensors (front view camera/front radar) . 5-58
- System malfunction 5-60
- Limitation of the system 5-62

Lane Keeping Assist (LKA) 5-70
- LKA system operation 5-72
- System setting 5-72
- LKA activation 5-73
- Lane Keeping Assist system malfunction 5-76

Blind-Spot Collision Warning (BCW) 5-79
- System description 5-79
- System setting and activation 5-80
- Warning message and system control 5-82

Driver Attention Warning (DAW) 5-90
- Low activity warning 5-90
- Leading vehicle departure alert 5-95

Cruise Control (CC) 5-98
• Cruise control switch 5-99
• To set cruise control speed 5-99
• To increase cruise control set speed 5-100
• To decrease the cruising speed 5-100
• To temporarily accelerate with the cruise control on. 5-101
• To cancel cruise control 5-101
• To resume cruising speed at more than approximately 30 km/h (20 mph) 5-102
• To turn cruise control off 5-102
Smart Cruise Control (SCC) 5-103
• Smart cruise control switch 5-103
• Set SCC Reaction 5-111
• Vehicle to vehicle distance setting 5-111
• When the lane ahead is clear 5-112
• When there is a vehicle ahead of you in your lane. 5-113
• Detecting Sensor (front view camera/front radar). 5-116
• To convert to cruise control mode 5-118
• Limitations of the system 5-119
Lane Following Assist (LFA) 5-125
• LFA system operation 5-126
• LFA system malfunction 5-129
• Limitation of the system 5-130
Rear Cross-Traffic Collision Warning (RCCW). 5-132
• System description 5-132
• System setting and activation 5-132
• Warning message and system control 5-134
Economical operation 5-142
Special driving conditions 5-144
• Hazardous driving conditions 5-144
• Reducing the risk of a rollover 5-144
• Rocking the vehicle 5-146
• Smooth cornering 5-146
• Driving at night 5-147
• Driving in the rain 5-147
• Driving in flooded areas 5-148
• Driving off-road 5-148
• Highway driving 5-148
Winter driving 5-149
• Snowy or icy conditions 5-149
• Use high quality ethylene glycol coolant 5-150
• Check battery and cables 5-150
• Change to "winter weight" oil if necessary 5-150
• Check spark plugs and ignition system 5-150
• To keep locks from freezing 5-150
• Use approved window washer anti-freeze in system 5-150

• Don't let your parking brake freeze 5-151
• Don't let ice and snow accumulate underneath . . . 5-151
• Carry emergency equipment 5-151
Trailer towing 5-151
Vehicle load limit 5-152
• Tire and loading information label 5-152
• Certification label 5-155
Vehicle weight 5-156
• Base curb weight 5-156
• Vehicle curb weight 5-156
• Cargo weight 5-156
• GAW (Gross Axle Weight) 5-156
• GAWR (Gross Axle Weight Rating) 5-156
• GVW (Gross Vehicle Weight). 5-156
• GVWR (Gross Vehicle Weight Rating) 5-156

Be sure the exhaust system does not leak.

The exhaust system should be checked whenever the vehicle is raised to change the oil or for any other purpose. If you hear a change in the sound of the exhaust or if you drive over something that strikes the underneath side of the vehicle, have the exhaust system checked as soon as possible by an authorized Kia dealer.

⚠ WARNING - Engine exhaust

Do not inhale exhaust fumes or leave your engine running in a enclosed area for a prolonged time. Exhaust fumes contain carbon monoxide, a colorless, odorless gas that can cause unconsciousness and death by asphyxiation.

⚠ WARNING - Open liftgate

Do not drive with the liftgate open. Poisonous exhaust gases can enter the passenger compartment. If you must drive with the liftgate open proceed as follows:

1. **Close all windows.**
2. **Open side vents.**
3. **Set the air intake control at "Fresh", the air flow control at "Floor" or "Face" and the fan at the highest speed.**

BEFORE DRIVING

Before entering vehicle

- Be sure that all windows, outside mirror(s), and outside lights are clean.
- Check the condition of the tires.
- Check under the vehicle for any sign of leaks.
- Be sure there are no obstacles behind you if you intend to back up.

Necessary inspections

Fluid levels, such as engine oil, engine coolant, brake fluid, and washer fluid should be checked on a regular basis, at the exact interval depending on the fluid. Further details are provided in chapter 7, “Maintenance”.

⚠ WARNING - Distracted driving

Focus on the road while driving. The driver's primary responsibility is in the safe and legal operation of the vehicle. Any handled devices, other equipment or vehicle systems that distract the driver should not be used during vehicle operation.

Before starting

- Close and lock all doors.
- Position the seat so that all controls are easily reached.
- Buckle your seat belt.
- Adjust the inside and outside rearview mirrors.
- Be sure that all lights work.
- Check all gauges.
- Check the operation of warning lights when the ignition switch or ENGINE START/STOP button is in the ON position.
- Release the parking brake and make sure the brake warning light goes out.

For safe operation, be sure you are familiar with your vehicle and its equipment.

⚠ WARNING - Fire risk

When you intend to park or stop the vehicle with the engine on, be careful not to depress the accelerator pedal for a long period of time. It may overheat the engine or exhaust system and cause fire.

⚠ WARNING - Check surroundings

Always check the surrounding areas near your vehicle for people, especially children, before putting a vehicle into D (Drive) or R (Reverse).

⚠ WARNING - Loose objects

Securely store items in your vehicle. When you make a sudden stop or turn the steering wheel rapidly, loose objects may drop on the floor and it could interfere with the operation of the foot pedals, possibly causing an accident.

⚠ WARNING - Proper footwear

Always wear appropriate shoes when operating your vehicle. Unsuitable shows (high heels, ski boots, sandals, etc.) may interfere with your ability to use the brake and accelerator pedals.

⚠ WARNING - Driving while intoxicated

Do not drive while intoxicated. Drinking and driving is dangerous. Even a small amount of alcohol will affect your reflexes, perceptions and judgment.

Driving while under the influence of drugs is as dangerous as or more dangerous than driving drunk.

KEY POSITIONS (IF EQUIPPED)

Illuminated ignition switch (if equipped)

OQLE055065

Whenever a front door is opened, the ignition switch will illuminate for your convenience, provided the ignition switch is not in the ON position. The light will go off immediately when the ignition switch is turned on. It will also go off after about 30 seconds when the door is closed.

Ignition switch position

LOCK

OJF055172

From the left dot, dot sequence is LOCK-ACC-ON-START.

The ignition key can be removed only in the LOCK position.

ACC (Accessory)

The steering wheel is unlocked and electrical accessories are operative.

✻ NOTICE

If difficulty is experienced turning the ignition switch to the ACC position, turn the key while turning the steering wheel right and left to release the tension.

ON

The warning lights can be checked before the engine is started. This is the normal running position after the engine is started.

Do not leave the ignition switch ON if the engine is not running to prevent battery discharge.

START

Turn the ignition switch to the START position to start the engine. The engine will crank until you release the key; then it returns to the ON position. The brake warning light can be checked in this position.

The anti-theft steering column lock (if equipped) is not a substitute for the parking brake. Before leaving the driver's seat, always make sure the shift lever is engaged in P (Park) for dual clutch transmission, set the parking brake fully and shut the engine off. Unexpected and sudden vehicle movement may occur if these precautions are not taken.

⚠ WARNING - Ignition switch

Never turn the ignition switch to LOCK or ACC while the vehicle is moving. This would result in loss of directional control and braking function, which could cause an accident.

⚠ WARNING - Key holder

Do not place small purses, multiple keys, or other heavy accessories on your vehicle key ring. The driver can accidently push these objects causing the ACC position to change while in motion and disrupt the proper operation of some of the vehicle's safety features.

⚠ WARNING - Leaving the Vehicle

To avoid unexpected or sudden vehicle movement, never leave your vehicle if the transmission is not locked in the P (Park) position and the parking brake is fully engaged. Before leaving the driver's seat, always make sure the shift lever is engaged in P (Park), set the parking brake fully and shut the engine off.

Starting the hybrid system

⚠ WARNING - Proper footwear

Always wear appropriate shoes when operating your vehicle. Unsuitable shoes (high heels, ski boots, sandals, etc.) may interfere with your ability to use the brake and accelerator pedal.

1. Make sure the parking brake is applied.
2. Place the transaxle shift lever in P (Park). Depress the brake pedal fully.
3. Turn the ignition switch to START. If the hybrid system starts, the "" indicator will come on.

⚠ WARNING - Steering wheel

Never reach for any controls through the steering wheel while the vehicle is in motion. The presence of your hand or arm in this area could cause a loss of vehicle control.

✻ NOTICE

- **Do not wait for the engine to warm up while the vehicle remains stationary.**
  Start driving at moderate engine speeds. (Steep accelerating and decelerating should be avoided.)
- **Always start the vehicle with your foot on the brake pedal. Do not depress the accelerator while starting the vehicle. Do not race the engine while warming it up.**
- **If ambient temperature is low, the "" indicator may remain illuminated longer than the normal amount of time.**

✻ NOTICE

To prevent damage to the vehicle:

- **If the "" indicator turns off while you are in motion, do not attempt to move the shift lever to the P (Park) position.**
  If traffic and road conditions permit, you may put the shift lever in the N (Neutral) position while the vehicle is still moving and turn the ignition switch to START in an attempt to restart the hybrid system.
- **Do not push or tow your vehicle to start the hybrid system.**

ENGINE START/STOP BUTTON (IF EQUIPPED)

Illuminated ENGINE START/STOP button

ODEP059004

Whenever the front door is opened, the ENGINE START/STOP button will illuminate for your convenience. The light will go off after about 30 seconds when the door is closed.

When all entrances are closed, if you lock the vehicle by using the transmitter or the smart key, the light will go off immediately.

ENGINE START/STOP button position

OFF

Not illuminated

To turn off the engine (START/RUN position) or vehicle power (ON position), press the ENGINE START/STOP button with the shift lever in the P (Park) position. When you press the ENGINE START/STOP button without the shift lever in the P (Park) position, the ENGINE START/STOP button will not change to the OFF position but to the ACC position.

In an emergency situation while the vehicle is in motion, you are able to turn the engine off and to the ACC position by pressing the ENGINE START/STOP button for more than 2 seconds or 3 times successively within 3 seconds. If the vehicle is still moving, you can restart the engine without depressing the brake pedal by pressing the ENGINE START/STOP button with the shift lever in the N (Neutral) position.

ACC(Accessory)

Amber

Press the ENGINE START/STOP button while it is in the OFF position without depressing the brake pedal.

If the ENGINE START/STOP button is in the ACC position for more than 1 hour, the button is turned off automatically to prevent battery discharge.

ON

Red

Press the ENGINE START/STOP button while it is in the ACC position without depressing the brake pedal.

The warning lights can be checked before the engine is started. Do not leave the ENGINE START/STOP button in the ON position for a long time. The battery may discharge, because the engine is not running.

START/RUN

Not illuminated

To start the engine, depress the brake pedal and press the ENGINE START/ STOP button with the shift lever in the P (Park) position. For your safety, start the engine with the shift lever in the P (Park) position.

If you press the ENGINE START/STOP button without depressing the brake pedal for dual clutch transmission vehicles, the engine will not start and the ENGINE START/STOP button changes as follow:

OFF ➔ ACC ➔ ON ➔ OFF or ACC

✻ NOTICE

If you leave the ENGINE START/STOP button in the ACC or ON position for a long time, the battery will discharge.

⚠ WARNING - Starting vehicle

Never press the ENGINE START/STOP button while the vehicle is in motion except in an emergency. This would result in loss of directional control and braking function, which could cause an accident.

Starting the hybrid system

⚠ WARNING

- **Always wear appropriate shoes when operating your vehicle. Unsuitable shoes, such as high heels, ski boots, sandals, flip-flops, etc., may interfere with your ability to use the brake and accelerator pedals.**
- **Do not start the vehicle with the accelerator pedal depressed.**

  The vehicle can move and lead to an accident.

✻ NOTICE

- The hybrid system will start by pressing the Engine Start/Stop button, only when the smart key is in the vehicle.
- Even when the smart key is in the vehicle, if it is far away from the driver, the hybrid system may not start.
- When the Engine Start/Stop button is in the ACC or ON position, and any door is open, the system checks for the smart key. When the smart key is not in the vehicle, the "🚗" indicator will blink and the warning "Key not in vehicle" will come on. When all doors are closed, the chime will also sound for about 5 seconds. Keep the smart key in the vehicle when in the ACC position or if the hybrid system is ON.

1. Always carry the smart key with you.
2. Make sure the parking brake is applied.
3. Make sure the shift lever is in P (Park).
4. Depress the brake pedal.
5. Press the Engine Start/Stop button. If the hybrid system starts, the " " indicator will come on.

✻ NOTICE

- **Do not wait for the engine to warm up while the vehicle remains stationary.**
  Start driving at moderate engine speeds. (Steep accelerating and decelerating should be avoided.)
- **Always start the vehicle with your foot on the brake pedal. Do not depress the accelerator while starting the vehicle. Do not race the engine while warming it up.**
- **If ambient temperature is low, the " " indicator may remain illuminated longer than the normal amount of time.**

✻ NOTICE

To prevent damage to the vehicle:

- **If the " " indicator turns off while you are in motion, do not attempt to move the shift lever to the P (Park) position.**
  If traffic and road conditions permit, you may put the shift lever in the N (Neutral) position while the vehicle is still moving and press the Engine Start/Stop button in an attempt to restart the hybrid system.
- **Do not push or tow your vehicle to start the hybrid system.**

⚠ WARNING - Unintended vehicle movement

Never leave the smart key in the vehicle with children or vehicle occupants who are unfamiliar with the vehicle operation. Pushing the ENGINE START/STOP button while the smart key is in the vehicle may result in unintended engine activation and/or unintended vehicle movement.

- If the battery is weak or the smart key does not work correctly, you can start the engine by pressing the engine start/stop button with the smart key.

  The side with the lock button should contact the engine start/stop button directly.

  When you press the engine start/stop button directly with the smart key, the smart key should contact the button at a right angle.

- When the stop lamp fuse is blown, you can't start the engine normally. Replace the fuse with a new one. If it is not possible, you can start the engine by pressing the ENGINE START/STOP button for 10 seconds while it is in the ACC position. The engine can start without depressing the brake pedal. But for your safety always depress the brake pedal before starting the engine.

Do not press the ENGINE START/STOP button for more than 10 seconds except when the stop lamp fuse is blown.

DUAL CLUTCH TRANSMISSION (DCT)

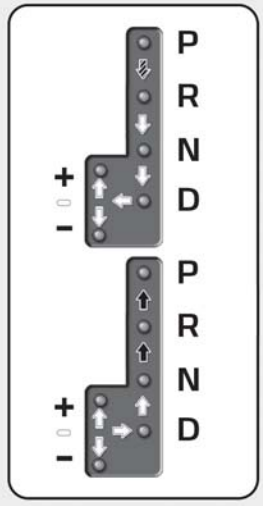

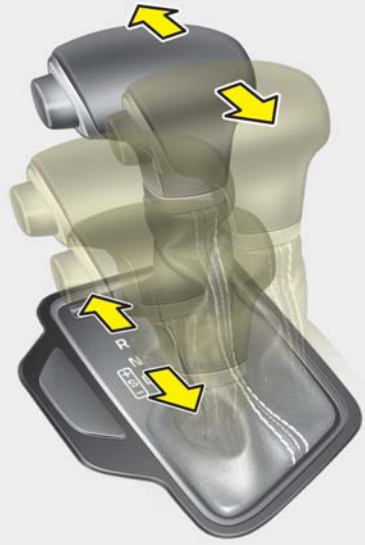

Depress the brake pedal and press the shift button while moving the shift lever.

Press the shift button while moving the shift lever.

The shift lever can freely operate.

❊ To move the shift lever from/to P (Parking) or between R (Reverse) and D (Drive), you must depress the brake pedal for the vehicle to stand still.

ODE056010

Dual clutch transmission operation

The dual clutch transmission has six forward speeds and one reverse speed.

The individual speeds are selected automatically in the D (Drive) position.

- The dual Clutch Transmission gives the driving feel of a manual transmission, yet provides the ease of a fully automatic transmission. Unlike a traditional automatic transmission, the gear shifting can be felt (and heard) on the dual clutch transmission
  - Think of it as an automatically shifting manual transmission.
  - Shift into Drive range and get fully automatic shifting, similar to a conventional automatic transmission.
- Dual clutch transmission adopts dry-type dual clutch, which is different from torque converter of automatic transmission, and shows better acceleration performance during driving. But, initial launch might be little bit slower than Automatic Transmission.
- The dry-type clutch transfers torque and provides a direct driving feeling which may feel different from a conventional automatic transmission with a torque converter. This may be more noticeable when starting from a stop or low vehicle speed.
- When rapidly accelerating at low vehicle speed, engine could rev at high rpm depending on vehicle drive condition.
- For smooth launch uphill, press down the accelerator pedal smoothly depending on the current conditions.
- If you release your foot from the accelerator pedal at low vehicle speed, you may feel strong engine brake, which is similar to manual transmission.
- When driving downhill, you may use Sports Mode to downshift to a lower gear in order to control your speed without using the brake pedal excessively.
- When you turn the engine on and off, you may hear clicking sounds as the system goes through a self test. This is a normal sound for the dual Clutch Transmission.

⚠ WARNING

To reduce the risk of serious injury or death:

- **ALWAYS check the surrounding areas near your vehicle for people, especially children, before shifting a vehicle into D (Drive) or R (Reverse).**
- **Before leaving the driver's seat, always make sure the shift lever is in the P (Park) position, then set the parking brake, and place the ignition switch or ENGINE START/STOP button in the OFF position. Unexpected and sudden vehicle movement can occur if these precautions are not followed.**
- **Do not use engine braking (shifting from a high gear to lower gear) rapidly on slippery roads. The vehicle may slip, causing an accident.**

- To hold the vehicle on a hill use the foot brake or the parking brake. If the vehicle is held by applying the accelerator pedal on a hill the clutch and transmission will be overheated resulting in damage.

  At this time, a warning message (“Steep grade! Press brake pedal”) will appear on the LCD display.
- If the clutch becomes overheated by excessive use of the clutch to hold on a hill, you may notice a shudder feeling and a blinking display on the instrument cluster. When this occurs, the clutch is disabled until the clutch cools to normal temperatures. If this occurs, pull over to a safe location, shift into P (Park) and apply the foot brake for a certain time on the LCD warning until it disappears.
- If the LCD warning is active, the foot brake must be applied.
- Ignoring the warnings can lead to damage to the transmission.
- If the display continues to blink, for your safety, we recommend that you contact an authorized Kia dealer.
- Under certain conditions such as repeated launch on steep grades, the clutch in the transmission could overheat.

  When the clutch is overheated, the safe protection mode engages. If the safe protection mode engages, the gear position indicator on the cluster blinks with a chime sound.

  At this time, one of these warning messages (“Transmission temp. is high! Stop safely”, “Trans hot! Park with engine on”, “Trans Cooling. Remain parked for 00 min.”, “Trans Cooled. Resume driving”) will appear on the LCD display and driving may not be smooth.

  If you ignore this warning, the driving condition may become worse. To return the normal driving condition, stop the vehicle and apply the foot brake for a few minutes before driving off.
- Gear shifts may be more noticeable than a conventional automatic transmission. This is a normal characteristic of this type of dual clutch transmission.
- During the first 1,500 km (1,000 miles), you may feel that the vehicle may not be smooth when accelerating at low speed. During this break-in period, the shift quality and performance of your new vehicle is continuously optimized.
- Always come to a complete stop before shifting into D (Drive) or R (Reverse).
- Do not put the shift lever in N (Neutral) while driving.

⚠ CAUTION

- ***To avoid damage to your transaxle, do not try to accelerate in R (Reverse) or any forward gear position with the brakes on.***
- ***When stopped on slope, do not hold the vehicle with accelerator pedal. Use the service brake or the parking brake.***

The indicator in the instrument cluster displays the shift lever position when the ignition switch or ENGINE START/STOP button is in the ON position.

P (Park)

Always come to a complete stop before shifting into P (Park).

To shift from P (Park), you must depress firmly on the brake pedal and make sure your foot is off the accelerator pedal.

The shift lever must be in P (Park) before turning the engine off.

⚠ WARNING

- **Shifting into P (Park) while the vehicle is in motion may cause you to lose control of the vehicle.**
- **After the vehicle has stopped, always make sure the shift lever is in P (Park), apply the parking brake, and turn the engine off.**
- **Do not use the P (Park) position in place of the parking brake.**

R (Reverse)

Use this position to drive the vehicle backward.

⚠ CAUTION

Always come to a complete stop before shifting into or out of R (Reverse); you may damage the transmission if you shift into R (Reverse) while the vehicle is in motion.

N (Neutral)

The wheels and transmission are not engaged.

> **⚠ WARNING**
>
> **Do not shift into gear unless your foot is firmly on the brake pedal. Shifting into gear when the engine is running at high speed can cause the vehicle to move very rapidly. You could lose control of the vehicle and hit people or objects.**

> **⚠ WARNING**
>
> **Do not drive with the shift lever in N (Neutral).**
>
> **The engine brake may not work and lead to an accident.**

- Parking in N (Neutral) gear

Follow below steps when parking and you want the vehicle to move when pushed.

1. After parking your vehicle, step on the brake pedal and move the shift lever to [P] with the ignition switch or ENGINE START/STOP button in [ON] or while the engine is running.
2. If the parking brake is applied unlock the parking brake.
   - For EPB (Electronic Parking Brake) equipped vehicles, push the brake pedal with the ignition switch or ENGINE START/STOP button in [ON] or while the engine is running to disengage the parking brake. If [AUTO HOLD] function is used while driving (If [AUTO HOLD] indicator is on in the cluster), press [AUTO HOLD] switch and [AUTO HOLD] function should be turn off.
3. While pressing the brake pedal, turn the ignition switch or ENGINE START/STOP button [OFF].
   - For smart key equipped vehicles, the ignition switch or ENGINE START/STOP button can be moved to [OFF] only when the shift lever is in [P].
4. Change the gear shift lever to [N] (Neutral) while pressing the brake pedal and pushing [SHIFT LOCK RELEASE] button or inserting, pressing down a tool (e.g. flathead screw-driver) into the [SHIFT LOCK RELEASE] access hole at the same time. Then, the vehicle will move when external force is applied.

⚠ WARNING - Parking In Neutral

- **With the exception of parking in neutral gear, always park the vehicle in [P] (Park) for safety and apply the parking brake.**
- **Before parking in [N] (Neutral) gear, make sure the parking ground is level and flat. Do not park in [N] gear on any slopes or gradients. If parked and left in [N], the vehicle may move and cause serious damage or injury.**
- **After the ignition switch or ENGINE START/STOP button has been turned off, the Electronic Parking Brake cannot be disengaged.**

(Continued)

(Continued)

- **For EPB (Electronic Parking Brake) equipped vehicles with [AUTO HOLD] function used while driving, if the ignition switch or ENGINE START/STOP button has been turned [OFF], the Electronic Parking Brake will be engaged automatically. Therefore, [AUTO HOLD] function should be turned off before the ignition button is turned off.**

D (Drive)

This is the normal driving position. The transmission will automatically shift through a six-gear sequence, providing the best fuel economy and power.

For extra power when passing another vehicle or driving uphill depress the accelerator pedal further until you feel the transmission downshift to a lower gear.

To stop the vehicle during driving, please press brake pedal fully to prevent unintended movement.

Manual mode

Whether the vehicle is stationary or in motion, manual mode is selected by pushing the shift lever from the D (Drive) position into the manual gate. To return to D (Drive) range operation, push the shift lever back into the main gate.

In manual mode, moving the shift lever backwards and forwards will allow you to select the desired range of gears for the current driving conditions.

+ (Up) : Push the lever forward once to shift up one gear.

- (Down) : Pull the lever backwards once to shift down one gear.

✻ NOTICE

- **Only the six forward gears can be selected. To reverse or park the vehicle, move the shift lever to the R (Reverse) or P (Park) position as required.**
- **Downshifts are made automatically when the vehicle slows down. When the vehicle stops, 1st gear is automatically selected.**
- **When the engine rpm approaches the red zone the transmission will upshift automatically.**
- **If the driver presses the lever to + (Up) or - (Down) position, the transmission may not make the requested gear change if the next gear is outside of the allowable rpm range.**

Paddle shifter (if equipped)

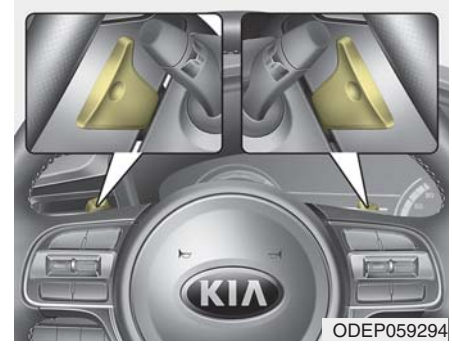

The paddle shift function is available when the shift lever is in the sport/manual mode.

With the shift lever in the manual mode

Pull the [+] or [-] paddle shifter once to shift up or down one gear.

✻ NOTICE

If you pull the [+] and [-] paddle shifters at the same time, you cannot shift the gear.

SPORT Mode / ECO Mode

When you drive after changing the gear shift lever to manual mode, the vehicle will automatically shift to SPORT mode. When you drive the vehicle after putting the gear shift lever to 'D', the vehicle will automatically shift to ECO mode. Each automatic change in shift will be displayed on the instrument cluster.

- ECO mode

This driving mode increases fuel efficiency. The actual fuel mileage will depend on your driving habits and road conditions.

- SPORT mode

This driving mode provides sporty driving experience. Be aware that fuel efficiency may decrease in this mode.

Shift lock system

For your safety, the dual clutch transmission has a shift lock system which prevents shifting the transaxle from P (Park) into R (Reverse) unless the brake pedal is depressed.

To shift the transaxle from P (Park) into R (Reverse):

1. Depress and hold the brake pedal.
2. Start the engine or turn the ignition switch or ENGINE START/STOP button to the ON position.
3. Move the shift lever.

If the brake pedal is repeatedly depressed and released with the shift lever in the P (Park) position, a chattering noise & vibration near the shift lever may be heard. This is a normal condition.

⚠ WARNING - Shifting from park

Always fully depress the brake pedal before and while shifting out of the P (park) position into another position to avoid inadvertent motion of the vehicle which could injure persons in or around the vehicle.

Shift-lock override

If the shift lever cannot be moved from the P (Park) position into R (Reverse) position with the brake pedal depressed, continue depressing the brake, then do the following:

1. Place the ignition switch or ENGINE START/STOP button in the LOCK/OFF position.
2. Apply the parking brake.
3. Carefully remove the cap (1) covering the shift-lock release access hole.
4. Insert a tool (e.g. flathead screwdriver) into the access hole and press down on the tool.
5. Move the shift lever.
6. Remove the tool from the shiftlock override access hole then install the cap.
7. We recommend that the system be inspected by an authorized Kia dealer.

Ignition key interlock system (if equipped)

The ignition key cannot be removed unless the shift lever is in the P (Park) position.

ENGINE START/STOP button interlock system (if equipped)

The ENGINE START/STOP button will not change to the OFF position unless the shift lever is in the P (Park) position.

Good driving practices

- Never move the shift lever from P (Park) or N (Neutral) to any other position with the accelerator pedal depressed.
- Never move the shift lever into P (Park) when the vehicle is in motion.
- Be sure the car is completely stopped before you attempt to shift into R (Reverse) or D (Drive).
- Never take the car out of gear and coast down a hill. This may be extremely hazardous. Always leave the car in gear when moving.
- Do not "ride" the brakes. This can cause them to overheat and malfunction. Instead, when you are driving down a long hill, slow down and shift to a lower gear. When you do this, engine braking will help slow the car.
- Slow down before shifting to a lower gear. Otherwise, the lower gear may not be engaged.
- Always use the parking brake. Do not depend on placing the transaxle in P (Park) to keep the car from moving.
- Exercise extreme caution when driving on a slippery surface. Be especially careful when braking, accelerating or shifting gears. On a slippery surface, an abrupt change in vehicle speed can cause the drive wheels to lose traction and the vehicle to go out of control.
- Optimum vehicle performance and economy is obtained by smoothly depressing and releasing the accelerator pedal.

⚠ CAUTION

- Holding the Vehicle Using Accelerator Pedal

Do not attempt to hold your vehicle on a hill by applying the accelerator pedal. This can cause your clutch and transmission to be damaged as a result of overheating.

⚠ WARNING

When driving uphill or downhill, always shift to D (Drive) for driving forward or shift to R (Reverse) for driving backwards, and check the gear position indicated on the cluster before driving.

Driving in the opposite direction of the selected gear can lead to a dangerous situation by shutting off the engine and affecting the braking performance.

⚠ WARNING

If your vehicle becomes stuck in snow, mud, sand, etc., then you may attempt to rock the vehicle free by moving it forward and backward. Do not attempt this procedure if people or objects are anywhere near the vehicle. During the rocking operation the vehicle may suddenly move forward of backward as it becomes unstuck, causing injury or damage to nearby people or objects.

REGENERATIVE BRAKING SYSTEM

Regenerative Braking (Paddle Shifter)

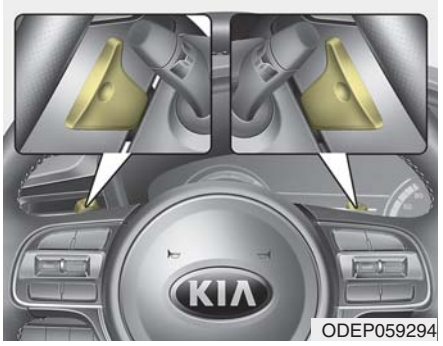

The paddle shifter is used to adjust the regenerative braking level from 0 to 3 during decelerating or braking.

- Left side [-] : Increases regenerative braking and deceleration.
- Right side [+] : Decreases regenerative braking and deceleration.

✻ NOTICE

- **The control level will be started at 0 when the engine start. It will activate only in D (Drive) range.**
- **If you operate the shift lever (to P, R, N/Sport), Regen B mode will be cancelled and if you return to D (Drive) range, the Regen B mode will be returned to 0 level.**
- **Regen B mode will be cancelled when ABS, ESC operate.**
- **The speed decrement may different depends on the vehicle speed even in the same Regen B level. (The speed decrement in each level is bigger in the city driving than that of highway driving.)**

✻ NOTICE

The vehicle does not completely stop by using paddle shifter lever. When the Regen B power reduced, the vehicle slowly moves about 10 km/h. In order to stop the vehicle, depress the brake pedal.

✻ NOTICE

The paddle shifter does not operate when:

- **The [-] and [+] paddle shifters are pulled at the same time.**
- **The vehicle is decelerating by depressing the brake pedal.**
- **Cruise Control system or Cruise Control system is activated.**

⚠ WARNING

Usage of the regenerative braking function may be limited according to the battery and motor's condition. (over charge, high and low temperature) Check traffic and driving conditions. If necessary, control the vehicle speed by using the brake pedal.

ODEP059298

The selected regenerative braking level is displayed on the instrument cluster.

Drive mode	Paddle shifter lever operation	Paddle shift lever function
ECO	+	Reduction regenerative braking level
	-	Increase of regenerative braking level
SPORT	+	manual shift (+)
	-	manual shift (-)

❈ The paddle shifter function changed by selection of Drive mode.

Regeneration unavailable. Battery full

ODEP059295L

If SOC(State of High voltage battery Charge) is high, it is not possible to enable Regen B mode. Use the function again after normal driving.

Regeneration conditions not met

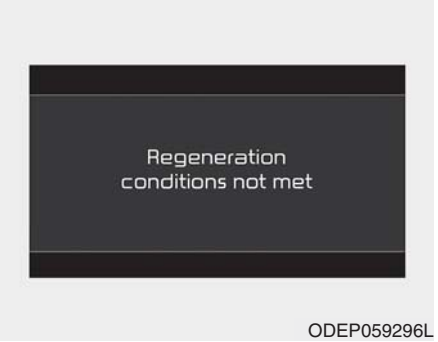

ODEP059296L

- If the motor and battery is in high/low temperature status or if there is a malfunction on battery and transmission, the warning message will be displayed.
- If the vehicle entering the Regen B mode during the activation of ABS/Cruise Control/Smart Cruise Control, the warning message will be displayed.

Once the warning message is displayed, the usage of function will be temporarily limited. Use the function again after normal driving.

BRAKE SYSTEM

Power brakes

Your vehicle has power-assisted brakes that adjust automatically through normal usage.

If the hybrid system is not on or is turned off while driving, the power assist for the brakes will not work. You can still stop your vehicle by applying greater force to the brake pedal than typical. The stopping distance, however, will be longer than with power brakes.

When the hybrid system is not on, the reserve brake power is partially depleted each time the brake pedal is applied. Do not pump the brake pedal when the power assist has been interrupted.

Pump the brake pedal only when necessary to maintain steering control on slippery surfaces.

⚠ CAUTION - Brake Pedal

Do not drive with your foot resting on the brake pedal. This will create abnormally high brake temperatures which can cause excessive brake lining and pad wear.

⚠ WARNING - Steep hill braking

Avoid continuous application of the brakes when descending a long or steep hill by shifting to a lower gear. Continuous brake application may cause the brakes to overheat and could result in a temporary loss of braking performance.

⚠ WARNING - HEV driving down hill

Do not turn off the Hybrid system while going down a hill. The brake booster may not work sufficiently and the braking distance may be longer.

Wet brakes may impair the vehicle's ability to safely slow down; the vehicle may also pull to one side when the brakes are applied. Applying the brakes lightly will indicate whether they have been affected in this way. Always test your brakes in this fashion after driving through deep water. To dry the brakes, apply them lightly while maintaining a safe forward speed until brake performance returns to normal.

✻ NOTICE

Do not depress the brake pedal continuously without the "" indicator ON. The battery may be discharged.

In the event of brake failure

If service brakes fail to operate while the vehicle is in motion, you can make an emergency stop with the parking brake. The stopping distance, however, will be much greater than normal.

⚠ WARNING - Parking brake

Avoid applying the parking brake to stop the vehicle while it is moving except in an emergency situation. Applying the parking brake while the vehicle is moving at normal speeds can cause a sudden loss of control of the vehicle. If you must use the parking brake to stop the vehicle, use great caution in applying the brake.

Disc brakes wear indicator

When your brake pads are worn and new pads are required, you will hear a high-pitched warning sound from your front brakes or rear brakes. You may hear this sound come and go or it may occur whenever you depress the brake pedal.

Please remember that some driving conditions or climates may cause a brake squeal when you first apply (or lightly apply) the brakes. This is normal and does not indicate a problem with your brakes.

Always replace the front or rear brake pads as pairs.

⚠ CAUTION - Replace brake pads

Do not continue to drive with worn brake pads. Continuing to drive with worn brake pads can damage the braking system and result in costly brake repairs.

⚠ WARNING - Brake wear

Do not ignore high pitched wear sounds from your brakes. If you ignore this audible warning, you may eventually lose braking performance, which could lead to a serious accident.

Parking brake – Foot type

Applying the parking brake

ODE056015

To engage the parking brake, first apply the foot brake and then depress the parking brake pedal down as far as possible.

⚠ CAUTION - Parking brake

Driving with the parking brake applied will cause excessive brake pad (or lining) and brake rotor wear.

Releasing the parking brake

ODE056014

To release the parking brake, depress the parking brake pedal a second time while applying the foot brake. The pedal will automatically extend to the fully released position.

⚠ WARNING - Parking brake use

- **Never allow a passenger to touch the parking brake. If the parking brake is released unintentionally, serious injury may occur.**
- **All vehicles should always have the parking brake fully engaged when parked to avoid inadvertent movement of the vehicles which can injure occupants or pedestrians.**

W-75

Check the brake warning light by turning the ignition switch or ENGINE START/STOP button ON (do not start the engine). This light will be illuminated when the parking brake is applied with the Ignition switch or ENGINE START/STOP button in the START or ON position.

Before driving, be sure the parking brake is fully released and the brake warning light is off.

If the brake warning light remains on after the parking brake is released while the engine is running, there may be a malfunction in the brake system. Immediate attention is necessary.

If at all possible, cease driving the vehicle immediately. If that is not possible, use extreme caution while operating the vehicle and only continue to drive the vehicle until you can reach a safe location or repair shop.

Electronic Parking Brake (EPB) (if equipped)

Applying the parking brake

ODEP059284

To apply the EPB (Electronic Parking Brake):

1. Press the brake pedal.
2. Pull up the EPB switch.
3. Make sure the warning light comes on. Also, the EPB is applied automatically if the Auto Hold button is on when the engine is turned off. However, if you keep pressing the EPB switch till the engine is turned off, the EPB will not be applied.

✻ NOTICE

On a steep incline or when pulling a trailer if the vehicle does not stand still, do as follows:

1. Apply the EPB.
2. Pull up the EPB switch for more than 3 seconds.

⚠ CAUTION

Do not operate the EPB while the vehicle is moving except in an emergency situation. It could damage the vehicle system and endanger driving safety.

Releasing the parking brake

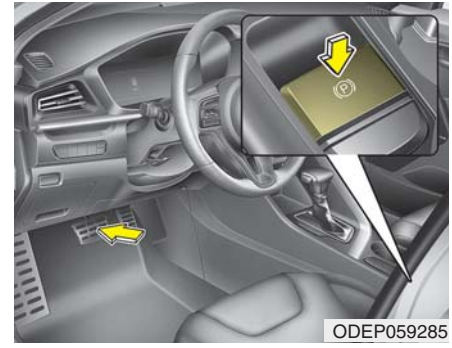
ODEP059285

To release the EPB (Electronic Parking Brake), press the EPB switch in the following condition:

1. Place the ENGINE START/STOP button in the ON position.
2. Press the brake pedal.
3. The shift lever must be in P (Park).
4. Make sure the brake warning light goes off.

To release EPB (Electronic Parking Brake) automatically:

- Shift lever in P (Park)

  With the engine running depress the brake pedal and shift out of P (Park) to R (Reverse) or D (Drive).
- Shift lever in N (Neutral)

  With the engine running depress the brake pedal and shift out of N (Neutral) to R (Reverse) or D (Drive).
- Depress the accelerator pedal slowly when the following conditions are satisfied:
  1. Start the engine.
  2. Fasten the driver's seat belt.
  3. Close the driver's door, engine hood and liftgate.
  4. The shift lever is in R (Rear), D (Drive) or manual mode.

Make sure the brake warning light goes off.

✻ NOTICE

- **For your safety, you can engage the EPB even though the ignition switch or ENGINE START/STOP button is in the OFF position, but you cannot release it.**
- **For your safety, depress the brake pedal and release the parking brake manually with the EPB switch when you drive downhill or when backing up the vehicle.**

⚠ CAUTION

- ***If the parking brake warning light is still on even though the EPB has been released, have the system checked by an authorized Kia dealer.***
- ***Do not drive your vehicle with the EPB applied. It may cause excessive brake pad and brake rotor wear.***

EPB (Electronic Parking Brake) may be automatically applied when:

- The EPB is overheated
- Requested by other systems
- The hybrid system is turned off with the EPB applied

✻ NOTICE

- **If Auto Hold is operating (Green light), EPB is applied automatically when the hybrid system is turned off.**
- **If Auto Hold is in ready position (White light), EPB is applied automatically after 1 second from the hybrid system off timing. In this case, if the EPB switch is pressed within 1 second, the EPB will not be applied.**

System warning

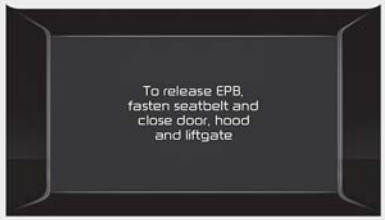

ODEP059326N

- If you try to drive off depressing the accelerator pedal with the EPB applied, but doesn't release automatically, a warning will sound and a message will appear.
- If the driver's seat belt is not fastened and the door, hood and liftgate is opened, a warning will sound and a message will appear.
- If there is a problem with the vehicle, a warning may sound and a message may appear.

If the above situation occurs, depress the brake pedal and release EPB by pressing the EPB switch.

⚠ WARNING

- **To prevent unintentional movement when stopped and leaving the vehicle, do not use the shift lever in place of the parking brake. Set the parking brake and make sure the shift lever is securely positioned in P (Park).**
- **Never allow anyone who is unfamiliar with the vehicle to touch the parking brake. If the parking brake is released unintentionally, serious injury may occur.**
- **All vehicles should always have the parking brake fully engaged when parking to avoid inadvertent movement of the car which can injure occupants or pedestrians.**

⚠ CAUTION

- ***A click or electric brake motor whine sound may be heard while operating or releasing the EPB, but these conditions are normal and indicate that the EPB is functioning properly.***
- ***When leaving your keys with a parking lot attendant or valet, make sure to inform him/her how to operate the EPB.***
- ***The EPB may malfunction if you drive with the EPB applied.***
- ***When you automatically release EPB by depressing the accelerator pedal, depress it slowly.***

System warning

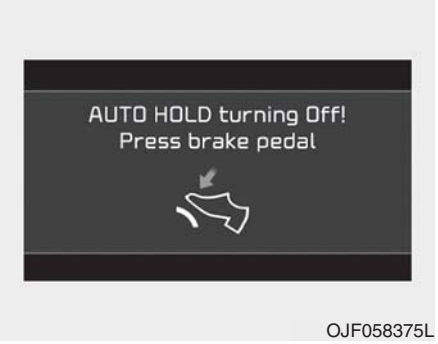

OJF058375L

When the conversion from Auto Hold to EPB is not working properly a warning will sound and a message will appear.

⚠ CAUTION

Engage the brake pedal when the above message appears for the Auto Hold and EPB may not activate.

System warning

OJF058377L

If the EPB is applied while Auto Hold is activated because of ESC (Electronic Stability Control) signal, a warning will sound and a message will appear.

EPB malfunction indicator (if equipped)

ODEP059286

This warning light illuminates if the ignition switch or ENGINE START/STOP button is changed to the ON position and goes off in approximately 3 seconds if the system is operation normally.

If the EPB malfunction indicator remains on, comes on while driving, or does not come on when the ignition switch or ENGINE START/STOP button is changed to the ON position, this indicates that the EPB may have malfunctioned.

If this occurs, have your vehicle checked by an authorized Kia dealer as soon as possible.

The EPB malfunction indicator may illuminate when the ESC indicator comes on to indicate that the ESC is not working properly, but it does not indicate a malfunction of the EPB.

⚠ CAUTION

- ***The EPB warning light may illuminate if the EPB switch operates abnormally. Shut the engine off and turn it on again after a few minutes. The warning light will go off and the EPB switch will operate normally. However, if the EPB warning light is still on, have the system checked by an authorized Kia dealer.***
- ***If the parking brake warning light does not illuminate or blinks even though the EPB switch was pulled up, the EPB is not applied.***

(Continued)

(Continued)

- ***If the parking brake warning light blinks when the EPB warning light is on, press the switch, then pull it up. Once more press it back to its original position and pull it back up. If the EPB warning does not go off, have the system checked by an authorized Kia dealer.***

Emergency braking

If there is a problem with the brake pedal while driving, emergency braking is possible by pulling up and holding the EPB switch. Braking is possible only while you are holding the EPB switch.

⚠ WARNING

Do not operate the parking brake while the vehicle is moving except in an emergency situation.

✻ NOTICE

During emergency braking by the EPB, the parking brake warning light will illuminate to indicate that the system is operating.

⚠ CAUTION

If you continuously notice a noise or burning smell when the EPB is used for emergency braking, have your vehicle checked by an authorized Kia dealer.

When the EPB (Electronic Parking Brake) does not release

If the EPB does not release normally, take your vehicle to an authorized Kia dealer by loading the vehicle on a flatbed tow truck and have the system checked.

AUTO HOLD (if equipped)

The Auto Hold maintains the vehicle in a standstill even though the brake pedal is not depressed after the driver brings the vehicle to a complete stop by depressing the brake pedal.

Set up

ODEP059287

1. With the driver's door, engine hood closed, fasten the driver's seat belt or depress the brake pedal and then press the Auto Hold button. The white AUTO HOLD indicator will come on and the system will be in the standby position.

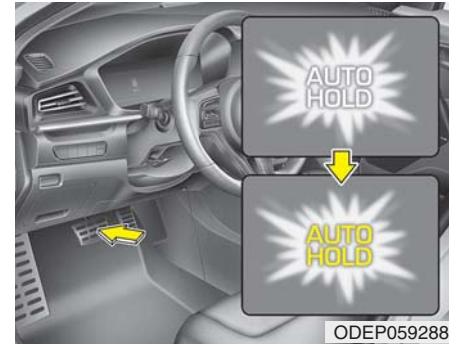

ODEP059288

2. When you stop the vehicle completely by depressing the brake pedal, the AUTO HOLD indicator changes from white to green.
3. The vehicle will remain stationary even if you release the brake pedal.
4. If EPB is applied, Auto Hold will be released.

Leaving

If you press the accelerator pedal with the shift lever in D (Drive) or manual mode, the Auto Hold will be released automatically and the vehicle will start to move. The indicator changes from green to white.

⚠ WARNING

When driving off from Auto Hold by depressing the accelerator pedal, always check the surrounding area near your vehicle.

Slowly depress the accelerator pedal for a smooth launch.

Cancel

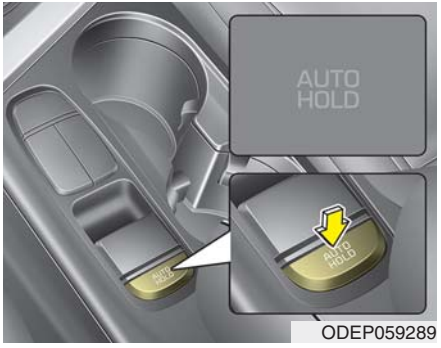

ODEP059289

To cancel the Auto Hold operation, press the Auto Hold switch. The AUTO HOLD indicator will go out.

To cancel the Auto Hold operation when the vehicle is at a standstill, press the Auto Hold switch while depressing the brake pedal.

✻ NOTICE

- **The Auto Hold does not operate when:**
  - **The driver's door is opened**
  - **The engine hood is opened**
  - **The shift lever is in P (Park) or R (Reverse)**
  - **The EPB is applied**
- **For your safety, the Auto Hold automatically switches to EPB in such cases:**
  - **The driver's door is opened**
  - **The engine hood is opened**
  - **The vehicle is in a standstill for more than 10 minutes**
  - **The vehicle is standing on a steep slope**
  - **The vehicle moved several times**

(Continued)

(Continued)

In these cases, the brake warning light comes on, the AUTO HOLD indicator changes from green to white, and a warning sounds and a message will appear to inform you that EPB has been automatically engaged. Before driving off again, press foot brake pedal, check the surrounding area near your vehicle and release parking brake manually with the EPB switch.

- If the AUTO HOLD indicator lights up yellow, the Auto Hold is not working properly. Take your vehicle to an authorized Kia dealer and have the system checked.
- While operating Auto Hold, you may hear mechanical noise. However, it is normal operation noise.

⚠ WARNING

- **Press the accelerator pedal slowly when you start the vehicle.**
- **For your safety, cancel the Auto Hold when you drive downhill or back up or park the vehicle.**

⚠ CAUTION

If there is a malfunction with the driver's door, engine hood open detection system, the Auto Hold may not work properly.

Take your vehicle to an authorized Kia dealer and have the system checked.

Warning messages

Parking brake automatically engaged

When the EPB is applied from Auto Hold, a warning will sound and a message will appear.

AUTO HOLD turning Off!
Press brake pedal

OJF058375L

When the conversion from Auto Hold to EPB is not working properly a warning will sound and a message will appear.

✻ NOTICE

When this message is displayed, the Auto Hold and EPB may not operate. For your safety, depress the brake pedal.

Press brake pedal to deactivate AUTO HOLD

OJF058381L

If you did not apply the brake pedal when you release the Auto Hold by pressing the [AUTO HOLD] switch, a warning will sound and a message will appear.

AUTO HOLD conditions not met. Close door and hood

ODEP059313L

When you press the [AUTO HOLD] switch, if the driver's door, engine hood are not closed, a warning will sound and a message will appear on the LCD display. At this moment, press the [AUTO HOLD] button after closing the driver's door and hood.

Anti-lock brake system (ABS)

ABS (or ESC) will not prevent accidents due to improper or dangerous driving maneuvers. Even though vehicle control is improved during emergency braking, always maintain a safe distance between you and objects ahead. Vehicle speeds should always be reduced during extreme road conditions. The vehicle should be driven at reduced speeds in the following circumstances:

- When driving on rough, gravel or snow-covered roads
- When driving on roads where the road surface is pitted or has different surface heights.

Driving in these conditions increases the stopping distance for your vehicle.

The ABS continuously senses the speed of the wheels. If the wheels are going to lock, the ABS system repeatedly modulates the hydraulic brake pressure to the wheels.

When you apply your brakes under conditions which may lock the wheels, you may hear a "tik-tik" sound from the brakes, or feel a corresponding sensation in the brake pedal. This is normal and it means your ABS is active.

In order to obtain the maximum benefit from your ABS in an emergency situation, do not attempt to modulate your brake pressure and do not try to pump your brakes. Press your brake pedal as hard as possible to allow the ABS to control the force being delivered to the brakes.

✻ NOTICE

A click sound may be heard in the engine compartment when the vehicle begins to move after the engine is started. These conditions are normal and indicate that the anti-lock brake system is functioning properly.

- Even with the anti-lock brake system, your vehicle still requires sufficient stopping distance. Always maintain a safe distance from the vehicle in front of you.
- Always slow down when cornering. The anti-lock brake system cannot prevent accidents resulting from excessive speeds.
- On loose or uneven road surfaces, operation of the anti-lock brake system may result in a longer stopping distance than for vehicles equipped with a conventional brake system.

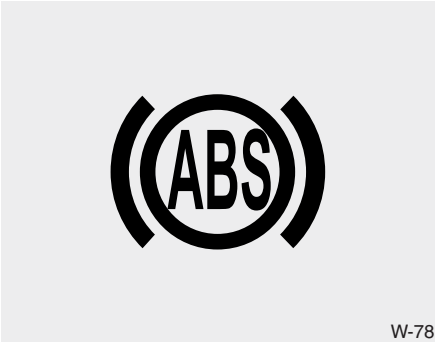

W-78

The ABS warning light will stay on for approximately 3 seconds after the ignition switch or the ENGINE START/STOP button is ON. During that time, the ABS will go through self-diagnosis and the light will go off if everything is normal. If the light stays on, you may have a problem with your ABS. Contact an authorized Kia dealer as soon as possible.

- When you drive on a road having poor traction, such as an icy road, and have operated your brakes continuously, the ABS will be active continuously and the ABS warning light may illuminate. Pull your vehicle over to a safe place and stop the engine.
- Restart the engine. If the ABS warning light goes off, then your ABS system is normal. Otherwise, you may have a problem with the ABS. Contact an authorized Kia dealer as soon as possible.

✻ NOTICE

When you jump start your vehicle because of a drained battery, the engine may not run as smoothly and the ABS warning light may turn on at the same time. This happens because of low battery voltage. It does not mean your ABS has malfunctioned.

- **Do not pump your brakes!**
- **Have the battery recharged before driving the vehicle.**

Electronic Stability Control (ESC)

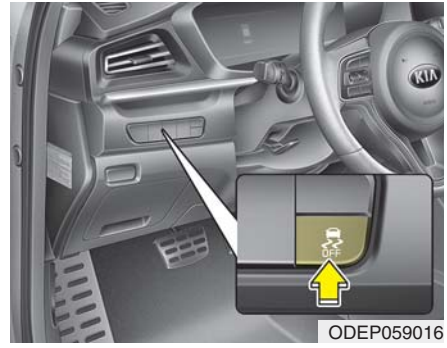

ODEP059016

The Electronic Stability Control (ESC) system is designed to stabilize the vehicle during cornering maneuvers. ESC checks where you are steering and where the vehicle is actually going. ESC applies the brakes on individual wheels and intervenes with the engine management system to stabilize the vehicle.

Electronic stability control (ESC) will not prevent accidents. Excessive speed in turns, abrupt maneuvers and hydroplaning on wet surfaces can still result in serious accidents.

Only a safe and attentive driver can prevent accidents by avoiding maneuvers that cause the vehicle to lose traction. Even with ESC installed, always follow all the normal precautions for driving - including driving at safe speeds for the conditions.

⚠ WARNING

For maximum protection, always wear your seat belt. No system, no matter how advanced, can compensate for all driver error and/or driving conditions. Always drive responsibly.

The Electronic Stability Control (ESC) system is an electronic system designed to help the driver maintain vehicle control under adverse conditions. It is not a substitute for safe driving practices. Factors including speed, road conditions and driver steering input can all affect whether ESC will be effective in preventing a loss of control. It is still your responsibility to drive and corner at reasonable speeds and to leave a sufficient margin of safety.

When you apply your brakes under conditions which may lock the wheels, you may hear a “tik-tik” sound from the brakes, or feel a corresponding sensation in the brake pedal. This is normal and it means your ESC is active.

✻ NOTICE

A click sound may be heard in the engine compartment when the vehicle begins to move after the engine is started. These conditions are normal and indicate that the Electronic Stability Control System is functioning properly.

ESC operation

ESC ON condition

-

- When the ignition switch or the ENGINE START/STOP button is turned ON, ESC and ESC OFF indicator lights illuminate for approximately 3 seconds, then ESC is turned on.
- Press the ESC OFF button for at least half a second after turning the ignition switch or the ENGINE START/STOP button ON to turn ESC off. (ESC OFF indicator will illuminate). To turn the ESC on, press the ESC OFF button (ESC OFF indicator light will go off).
- When starting the engine, you may hear a slight ticking sound. This is the ESC performing an automatic system self-check and does not indicate a problem.

When operating

When the ESC is in operation, the ESC indicator light blinks.

- When the Electronic Stability Control is operating properly, you can feel a slight pulsation in the vehicle. This is only the effect of brake control and indicates nothing unusual.
- When moving out of the mud or driving on a slippery road, pressing the accelerator pedal may not cause the engine rpm (revolutions per minute) to increase.

ESC operation off

ESC OFF state

This car has 2 kinds of ESC off states.

If the engine stops when ESC is off, ESC remains off. Upon restarting the engine, the ESC will automatically turn on again.

"Traction Control disabled"

• ESC off state 1

To cancel ESC operation, press the ESC OFF button (ESC OFF) for less than 3 seconds and the ESC OFF indicator light (ESC OFF) will illuminate. At this state, the engine control function does not operate. It means the traction control function does not operate. Only the brake control function will operate.

"Traction & Stability Control disabled"

• ESC off state 2

To cancel ESC operation, press the ESC OFF button (ESC OFF) for more than 3 seconds. ESC OFF indicator light (ESC OFF) will illuminate and ESC OFF warning chime will sound. At this state, the engine control function and brake control function do not operate. It means the car stability control function will not operate any more.

Indicator light

■ ESC indicator light

■ ESC OFF indicator light

When ignition switch or the ENGINE START/STOP button is turned to ON, the indicator light illuminates, then goes off if the ESC system is operating normally.

The ESC indicator light blinks whenever ESC is operating or illuminates when ESC fails to operate.

The ESC OFF indicator light comes on when the ESC is turned off with the button.

⚠ WARNING - Electronic stability control

Drive carefully even though your vehicle has Electronic Stability Control. It can only assist you in maintaining control under certain circumstances.

ESC OFF usage

When driving

- ESC should be turned on for daily driving whenever possible.
- To turn ESC off while driving, press the ESC OFF button while driving on a flat road surface.

⚠ WARNING - Operating ESC

Never press the ESC OFF button while ESC is operating (ESC indicator light blinks).

If ESC is turned off while ESC is operating, the vehicle may slip out of control.

✻ NOTICE

- **When operating the vehicle on a dynamometer, ensure that the ESC is turned off (ESC OFF light illuminated). If the ESC is left on, it may prevent the vehicle speed from increasing, and result in false diagnosis.**
- **Turning the ESC off does not affect ABS or brake system operation.**

Vehicle Stability Management (VSM)

This system provides further enhancements to vehicle stability and steering responses when a vehicle is driving on a slippery road or a vehicle detects changes in coefficient of friction between right wheels and left wheels when braking.

⚠ WARNING - Tire/ Wheel size

When replacing tires and wheels, make sure they are the same size as the original tires and wheels installed. Driving with varying tire or wheel sizes may diminish any supplemental safety benefits of the VSM system.

VSM operation

When the VSM is in operation, ESC indicator light ( ) blinks.

When the vehicle stability management is operating properly, you can feel a slight pulsation in the vehicle and/or abnormal steering responses (EPS- Electronic Power Steering). This is only the effect of brake and EPS control and indicates nothing unusual.

The VSM does not operate when:

- Driving on a sloping road such as a gradient or incline
- Driving in reverse
- ESC OFF indicator light ( ) remains on the instrument cluster
- EPS indicator light remains on the instrument cluster

VSM operation off

If you press the ESC OFF button to turn off the ESC, the VSM will also cancel and the ESC OFF indicator light ( ) illuminates.

To turn on the VSM, press the button again. The ESC OFF indicator light goes out.

⚠ WARNING

- Vehicle stability management

Drive carefully even though your vehicle has vehicle stability management. It can only assist you in maintaining control of the vehicle under certain circumstances.

Malfunction indicator

The VSM can be deactivated even if you don't cancel the VSM operation by pressing the ESC OFF button. It indicates that a malfunction has been detected somewhere in the Electric Power Steering system or VSM system. If the ESC indicator light ( ) or EPS warning light remains on, take your vehicle to an authorized Kia dealer and have the system checked.

✻ NOTICE

- **The VSM is designed to function above approximately 22 km/h (13 mph) on curves.**
- **The VSM is designed to function above approximately 10 km/h (6 mph) when a vehicle is braking on a split-mu surface. A split-mu surface is made of two surfaces which have different friction forces.**

- The Vehicle Stability Management system is not a substitute for safe driving practices but a supplementary function only. It is the responsibility of the driver to always check the speed and the distance to the vehicle ahead. Always hold the steering wheel firmly while driving.
- Your vehicle is designed to activate according to the driver's intention, even with installed VSM. Always follow all the normal precautions for driving at safe speeds for the conditions – including driving in inclement weather and on a slippery road.

⚠ WARNING

For maximum protection, always wear your seat belt. No system, no matter how advanced, can compensate for all driver error and/or driving conditions. Always drive responsibly.

Hill-start Assist Control (HAC)

A vehicle has the tendency to roll back on a steep hill when it starts to go after stopping. The Hill-start Assist Control (HAC) prevents the vehicle from rolling back by applying the brakes automatically for about 2 seconds. The brakes are released when the accelerator pedal is depressed or after about 2 seconds.

The HAC is activated only for about 2 seconds, so when the vehicle is starting off always depress the accelerator pedal.

⚠ WARNING - Maintaining Brake Pressure on Incline

HAC does not replace the need to apply brakes while stopped on an incline. While stopped, make sure you maintain brake pressure sufficient to prevent your vehicle from rolling backward and causing an accident. Don't release the brake pedal until you are ready to accelerate forward.

Good braking practices

- Check to be sure the parking brake is not engaged and the parking brake indicator light is out before driving away.
- Driving through water may get the brakes wet. They can also get wet when the vehicle is washed. Wet brakes can be dangerous! Your vehicle will not stop as quickly if the brakes are wet. Wet brakes may cause the vehicle to pull to one side.

  To dry the brakes, apply the brakes lightly until the braking action returns to normal, taking care to keep the vehicle under control at all times. If the braking action does not return to normal, stop as soon as it is safe to do so and call an authorized Kia dealer for assistance.
- Don't coast down hills with the vehicle out of gear. This is extremely hazardous. Keep the vehicle in gear at all times, use the brakes to slow down, then shift to a lower gear so that engine braking will help you maintain a safe speed.
- Don't "ride" the brake pedal. Resting your foot on the brake pedal while driving can be dangerous because the brakes might overheat and lose their effectiveness. It also increases the wear of the brake components.
- If a tire goes flat while you are driving, apply the brakes gently and keep the vehicle pointed straight ahead while you slow down. When you are moving slowly enough for it to be safe to do so, pull off the road and stop in a safe place.
- If your vehicle is equipped with a dual clutch transmission, don't let your vehicle creep forward. To avoid creeping forward, keep your foot firmly on the brake pedal when the vehicle is stopped.
- Be cautious when parking on a hill. Firmly engage the parking brake and place the shift lever in P (Dual clutch transmission). If your vehicle is facing downhill, turn the front wheels into the curb to help keep the vehicle from rolling.

  If your vehicle is facing uphill, turn the front wheels away from the curb to help keep the vehicle from rolling. If there is no curb or if it is required by other conditions to keep the vehicle from rolling, block the wheels.
- Under some conditions your parking brake can freeze in the engaged position. This is most likely to happen when there is an accumulation of snow or ice around or near the rear brakes or if the brakes are wet. If there is a risk that the parking brake may freeze, apply it only temporarily while you put the shift lever in P (Dual clutch transmission) and block the rear wheels so the vehicle cannot roll. Then release the parking brake.
- Do not hold the vehicle on an incline with the accelerator pedal. This can cause the transaxle to overheat. Always use the brake pedal or parking brake.

FORWARD COLLISION-AVOIDANCE ASSIST (FCA) (SENSOR FUSION) (IF EQUIPPED)

FCA system is to reduce or to avoid accident risk. It recognizes the distance from the vehicle ahead, the pedestrian or the cyclist through the sensors (i.e. front view camera and front radar), and, if necessary, warns the driver of accident risk with the warning message or the warning alarms and apply emergency braking.

❊ FCA stands for Forward Collision-Avoidance Assist.

❊ Sensor fusion (front view camera + front radar) FCA system operates for the vehicle ahead, the pedestrian or the cyclist in front.

⚠ WARNING

Take the following precautions when using Forward Collision-Avoidance Assist system:

- **This system is only a supplemental system and it is not intended to, nor does it replace the need for the extreme care and attention of the driver. The sensing range and objects detectable by the sensors are limited. Pay attention to the road conditions at all times.**
- **NEVER drive too fast in accordance with the road conditions or while cornering.**
- **Always drive cautiously to prevent unexpected and sudden situations from occurring. FCA system does not stop the vehicle completely and is only intended to help mitigate an imminent collision.**

System setting and activation

Forward safety

The driver can activate FCA system by placing the ignition switch or ENGINE START/STOP button to the ON position and by selecting:

“User Settings → Driver Assistance → Forward Safety”

- If you select “Active Assist”, FCA system activates. FCA produces warning messages and warning alarms in accordance with the collision risk levels. Also, it controls the brakes in accordance with the collision risk levels.
- If you select “Warning Only”, FCA system activates and produces only warning alarms in accordance with the collision risk levels. You should control the brake directly because FCA system do not control the brake.
- If you select “Off”, FCA system deactivates,

The warning light illuminates on the LCD display, when you cancel FCA system. The driver can monitor the FCA ON/OFF status on the LCD display. Also, the warning light illuminates when the ESC (Electronic Stability Control) is turned off. When the warning light remains ON with FCA activated, have your vehicle inspected by an authorized Kia dealer.

Warning Timing

The driver can select the initial warning activation time on the LCD display.

Go to the “User Settings → Driver Assistance → Warning Timing → Normal/Later”

The options for the initial Forward Collision Warning includes the following:

- Normal:

When this condition is selected, the initial Forward Collision Warning system is activated normally. This setting allows for a nominal amount of distance between the vehicle ahead before the initial warning occurs.

- Later:

When this condition is selected, the initial Forward Collision Warning system is activated later than normal. This setting reduces the amount of distance between the vehicle ahead, the pedestrian or the cyclist before the initial warning occurs.

Select 'Later' when traffic is light and when driving speed is slow.

If the vehicle in front puts on a burst of speed, the driver can notice the warning alarm is early even though the later option is selected.

✻ NOTICE

If you change the warning timing, the warning timing of other systems may change. Always be aware of warning timing before changing the warning timing.

Prerequisite for activation

FCA system gets ready to be activated, when the “Active assist” or “Warning only” under the Forward Safety is selected on the LCD display, and when the following prerequisites are satisfied.

- The ESC is activated.
- The driving speed is over 8 km/h (5 mph). (However, FCA is activated within certain driving speed.)
- When recognizing the vehicle or the pedestrian or the cyclist in front. (However, FCA does not activate according to conditions in front and vehicle systems, but it notices only certain warnings.)
- FCA does not operate properly or it only produces a warning alarms in accordance with the driving or vehicle condition.
- If the warning only under the Forward Safety is selected, FCA produces only warning alarms in accordance with the collision risk levels.

✻ NOTICE

FCA may not operate properly according to the frontal situation, the direction of pedestrian or cyclist and speed.

⚠ WARNING

- **Completely stop the vehicle in a safe location before operating the switch on the steering wheel to activate/deactivate FCA system.**
- **FCA system automatically activates upon placing the ignition switch to the ON position. The driver can deactivate FCA system by canceling the system setting on the LCD display or Infotainment System screen.**
- **FCA system automatically deactivates upon canceling the ESC. When the ESC is canceled, FCA system cannot be activated on the LCD display or Infotainment System screen.**

  FCA system warning light will illuminate, which is normal.

FCA warning message and system control

FCA system produces warning messages and warning alarms in accordance with the collision risk levels of followings like vehicle's sudden braking in front or lack of vehicle to vehicle distance or collision to pedestrians or cyclist. Also, it controls the brakes in accordance with the collision risk levels.

The driver can select the initial warning activation time in the User settings in the LCD display. The options for the initial Forward Collision Warning include Normal or Late initial warning time.

Collision Warning (1st warning)

OJF058389L

- The warning message appears on the LCD display with the warning alarms.
- The Vehicle may slow down slightly
  - It will operate if the vehicle speed is greater than 8 km/h (5 mph) and less than or equal to 180 km/h (110 mph) on a forward vehicle. (Depending on the condition of the vehicle ahead and the environment surrounding it, the possible maximum operating speed may be reduced.)

- For pedestrians and cyclists, the vehicle speed is greater than or equal to 8 km/h (5 mph) and less than 70 km/h (45 mph). (Depending on the condition of pedestrians and bike riders and the surrounding environment the possible maximum operating speed may be reduced.)

• FCA system controls the brakes within certain limit to release shock from the collision.

- If you select “Warning Only”, FCA system activates and produces only warning alarms in accordance with the collision risk levels. You should control the brake directly because FCA system do not control the brake.

Emergency braking (2nd warning)

OJF058390L

• The warning message appears on the LCD display with the warning alarms.

• The brake control is maximized just before a collision, reducing impact when it strikes a forward vehicle.

- It will operate if the vehicle speed is greater than 8 km/h (5 mph) and less than or equal to 80 km/h (50 mph) on a forward vehicle. (Depending on the condition of the vehicle ahead and the environment surrounding it, the possible maximum operating speed may be reduced.)

- For pedestrians and cyclists, the vehicle speed is greater than or equal to 8 km/h (5 mph) and less than 70 km/h (45 mph). (Depending on the condition of pedestrians and bike riders and the surrounding environment the possible maximum operating speed may be reduced.)

• FCA system controls the brakes within certain limit to release shock from the collision.

FCA system controls the maximum brakes just before the collision.

- If you select “Warning Only”, FCA system activates and produces only warning alarms in accordance with the collision risk levels. You should control the brake directly because FCA system do not control the brake.

Brake operation

- In an urgent situation, the braking system enters into the ready status for prompt reaction to assist the driver in depressing the brake pedal.
- FCA system provides additional braking power for optimum braking performance, when the driver depresses the brake pedal.
- The braking control is automatically deactivated, when the driver sharply depresses the accelerator pedal, or when the driver abruptly operates the steering wheel.
- The braking control is automatically canceled, when risk factors disappear.

⚠ CAUTION

The driver should always pay great caution to vehicle operation, even though there is no warning message or warning alarm.

⚠ WARNING

FCA system cannot avoid all collisions. FCA system might not completely stop the vehicle before a collision, due to ambient, weather and road conditions. The driver has the responsibility to drive safely and control the vehicle.

⚠ WARNING

FCA system operates in accordance with certain risk factors, such as the distance from the vehicle/passer-by in front, the speed of the vehicle/passer-by in front, and the driver's vehicle operation.

Detecting sensors (front view camera/front radar)

ODEP059029

ODEP059017

The sensors are that detecting the distance to vehicles ahead, pedestrian or cyclist.

In bad weather conditions such as heavy rain, heavy snow, and fog, or when sensor is covered by foreign material, dust, tec., the sensors will be degraded and the system will be temporarily disabled.

Always keep the sensor clean.

✻ NOTICE

- **Do not install any accessories, such as license plate molding or sticker, on the sensor area. Nor arbitrarily replace the bumper. Those may adversely affect the sensing performance.**
- **Always keep the sensor/bumper area clean.**
- **Use only soft cloths to wash the vehicle. Also, do not spray highly-pressurized water on the sensor installed on the bumper.**
- **Be careful not to apply unnecessary force on the frontal sensor area. When the sensor moves out of the correct position due to external force, the system may not normally operate even without the warning light or message. In this case, have your vehicle inspected by an authorized Kia dealer.**
- **Use only the genuine Kia sensor cover. Do not arbitrarily apply paint on the sensor cover.**

(Continued)

(Continued)

- **Do not tint the window or install stickers, accessories around the inside mirror where the camera is installed.**
- **Make sure the frontal camera installation point does not get wet.**
- **Do not impact or arbitrarily remove any radar/camera components.**
- **Do not place reflective objects(white paper or mirror etc.) on the crash pad.**
  The system may activate unnecessarily due to reflect of the sunlight.
- **Excessive audio volume may disturb the sound of the system warning alarm.**
- **For more cautions for the camera sensor, refer to the “Lane Keeping Assist (LKA)” in this chapter.**

Warning message and warning light

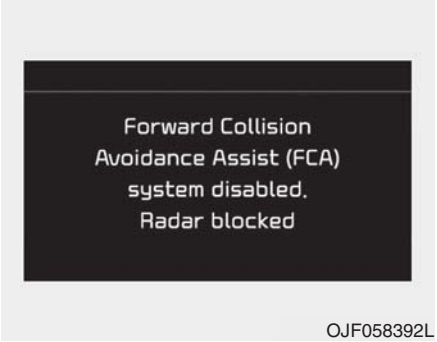

OJF058392L

If the sensor or sensor cover is covered by bad weather or foreign objects, dust, etc., FCA system operation may temporarily stop. In this case, the warning message appears to warn the driver.

This is not a malfunction with FCA system. To operate FCA system again, remove the foreign substances.

FCA system may not properly operate when the front radar is contaminated or an object such as an open area is not existed after engine start.

⚠ WARNING

FCA system may not activate without any warning messages according to driving condition, traffic on the road, weather, road condition, etc.

System malfunction

OJF058394L

- When FCA system is not working properly, the FCA warning light ( ) will illuminate and the warning message will appear for a few seconds. After the message disappears, the master warning light ( ) will illuminate. In this case, have your vehicle inspected by an authorized Kia dealer.
- The FCA warning message may appear along with the illumination of the ESC warning light.

⚠ WARNING

- **FCA system is only a supplemental system for the driver's convenience. The driver has the ultimate responsibility to control and operate the vehicle safely. Do not solely depend on FCA system. Rather, maintain a safe braking distance, and, if necessary, depress the brake pedal to lower the driving speed.**
- **In certain instances and under certain driving conditions, FCA system may activate unintentionally. This initial warning message appears on the LCD display with a warning chime.**

(Continued)

(Continued)

Also, in certain instances the front radar sensor or camera recognition system may not detect the vehicle, pedestrian or cyclist (if equipped) ahead. FCA system may not activate and the warning message will not be displayed.

- **FCA system may unnecessarily produce the warning message and the warning alarms. Also, due to the sensing limitation, FCA system may not produce the warning message and the warning alarm at all.**
- **When there is a malfunction with FCA system, the braking control does not operate upon detecting a collision risk even with other braking systems normally operating.**

(Continued)

(Continued)

- **FCA system operates only for the vehicle/pedestrian in front, while driving forward. It does not operate for any animals or vehicles in the opposite direction.**
- **FCA system does not recognize the vehicle, which transversally drives across the crossroad, or the vehicle, which is parked in the transversal direction.**
- **If the vehicle in front stops suddenly, you may have less control of the brake system. Therefore, always keep safe distance between your vehicle and the vehicle in front of you.**
- **FCA system may activate during braking and the vehicle may stop suddenly. And the load in the vehicle may endanger passengers. Therefore, always be mindful of the load volume in the vehicle.**

(Continued)

(Continued)

- **FCA system may not activate if the driver applies the brake pedal to avoid risk of collision.**
- **FCA system does not operate when the vehicle is in reverse. In these circumstances, you must maintain a safe braking distance, and if necessary, depress the brake pedal to reduce the driving speed in order to maintain a safe dis tance.**
- **The regular braking function will operate normally even if There is a problem with the FCA brake control system or other functions. In this case, the braking control will not operate in an imminent collision.**

(Continued)

(Continued)

- **FCA system may not activate according to driving condition, traffic on the road, weather, road condition, etc.**
- **FCA system may not activate in response to all types of vehicles.**

Limitation of the system

FCA system is an assistant system for a driver in a certain risky driving condition and it does not take every responsibility for all risks from driving condition.

FCA system monitors the driving situations through the radar and the camera sensor. Thus, for a situation out of the sensing range, FCA system may not normally operate. The driver should pay great caution in the following situations. FCA system operation may be limited.

Recognizing vehicles

The sensor may be limited when:

- The front view camera or front radar sensor is blocked with a foreign object or debris
- The camera lens is contaminated due to tinted, filmed or coated windshield, damaged glass, or stuck of foreign matter (sticker, bug, etc.) on the glass
- Inclement weather such as heavy rain or snow obscures the field of view of the radar sensor or camera
- There is interference by electromagnetic waves
- There is severe irregular reflection from the radar sensor
- The front view camera/front radar sensor recognition is limited
- The vehicle in front is too small to be detected (for example a motorcycle etc.)
- The vehicle in front is an oversize vehicle or trailer that is too big to be detected by the camera recognition system (for example a tractor trailer, etc.)
- The camera's field of view is not well illuminated (either too dark or too much reflection or too much backlight that obscures the field of view)
- The vehicle in front does not have their rear lights or their rear lights does not turned ON or their rear lights are located unusually.
- The outside brightness changes suddenly, for example when entering or exiting a tunnel
- When light coming from a street light or an oncoming vehicle is reflected on a wet road surface such as a puddle in the road
- The field of view in front is obstructed by sun glare
- The vehicle in front is driving erratically
- The vehicle is on unpaved or uneven rough surfaces, or road with sudden gradient changes.
- The vehicle is driven near areas containing metal substances as a construction zone, railroad, etc.
- The vehicle drives inside a building, such as a basement parking lot
- The front view camera does not recognize the entire vehicle in front.
- The front view camera is damaged.
- The brightness outside is too low such as when the headlamps are not on at night or the vehicle is going through a tunnel.
- The shadow is on the road by a median strip, trees, etc.
- The vehicle drives through a tollgate.
- The windshield glass is fogged up; a clear view of the road is obstructed.
- The rear part of the vehicle in front is not normally visible. (the vehicle turns in other direction or the vehicle is overturned.)
- The adverse road conditions cause excessive vehicle vibrations while driving
- The sensor recognition changes suddenly when passing over a speed bump

- The vehicle in front is moving longitudinally to the driving direction
- The vehicle in front is stopped longitudinally
- The vehicle in front is driving towards your vehicle or reversing
- You are on a roundabout and the vehicle in front circles
- It is difficult to secure the field of view of the front view camera such as backlight, reflected light, and darkness.
- When the front camera is blocked by continuous washer spray and wiper operation.
- The vehicle in front is a special purpose vehicle, a trailer, or a truck loading with unusual shape of luggage.
- The ambient light is too high or low.
- The front view camera is contaminated by front glass tinting, attaching film, water proof coating, damaged, foreign material such as a sticker, worm, etc.
- When the front view camera (including lens) or front radar is damaged.
- If not using headlamp or using weak light in the night or in a tunnel.
- Backlight is shining in the driving direction of the vehicle. (Including oncoming vehicle headlights.)
- When the rear part of the front vehicle is small or low.
- When a trailer or other vehicle is towing the front vehicle.
- When the ground clearance of the front vehicle is high.
- When a front vehicle makes sudden lane changes unexpectedly.

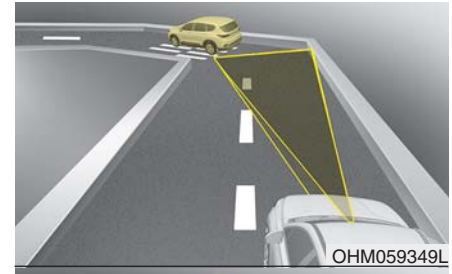
OHM059349L

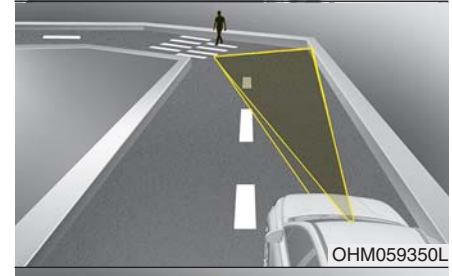
OHM059350L

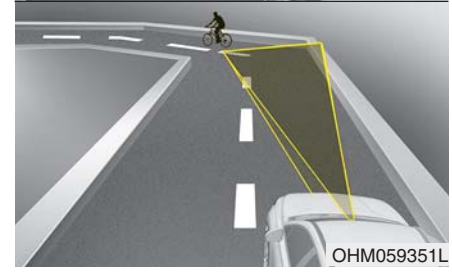
OHM059351L

- Driving on a curve

The performance of Forward Collision-Avoidance Assist system may be limited when driving on a curved road.

The front view camera or front radar sensor recognition system may not detect the vehicle, pedestrian or cyclist traveling in front on a curved road.

This may result in no alarm and braking when necessary.

Always pay attention to road and driving conditions, and if necessary, depress the brake pedal to reduce your driving speed in order to maintain a safe distance.

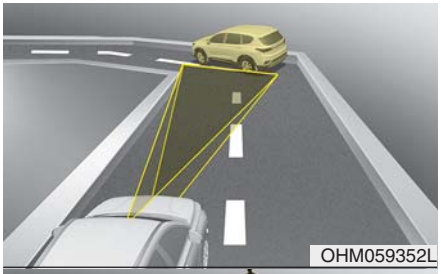
OHM059352L

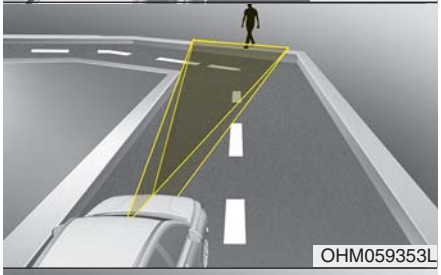
OHM059353L

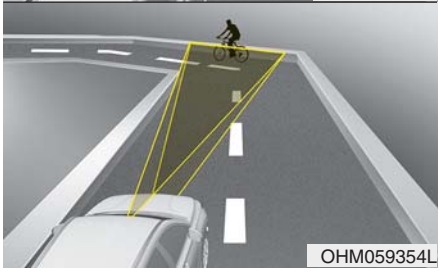
OHM059354L

Forward Collision-Avoidance Assist system may recognize a vehicle or pedestrian or cyclist in the next lane or outside the lane when driving on a curved road.

If this occurs, the system may unnecessarily alarm the driver and apply the brake. Always pay attention to road and driving conditions, while driving.

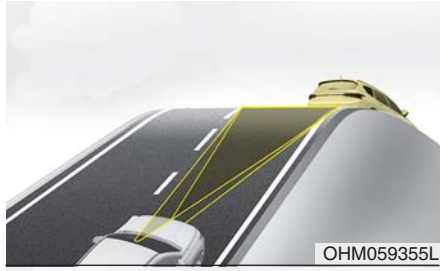
OHM059355L

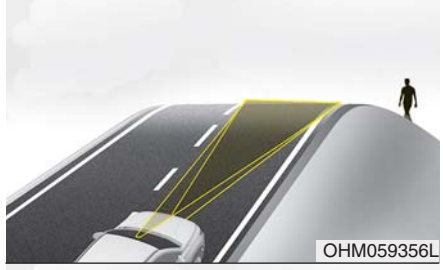
OHM059356L

OHM059357L

- Driving on a slope

The performance of Forward Collision-Avoidance Assist system may be decreased while driving upward or downward on a slope. The front view camera or front radar sensor recognition may not detect the vehicle, pedestrian or cyclist in front.

This may result in unnecessary alarm and braking or no alarm and braking when necessary.

When the system suddenly recognizes the vehicle, pedestrian or cyclist in front while passing over a slope, you may experience sharp deceleration.

Always keep your eyes forward while driving upward or downward on a slope, and, if necessary, depress the brake pedal to reduce your driving speed in order to maintain distance.

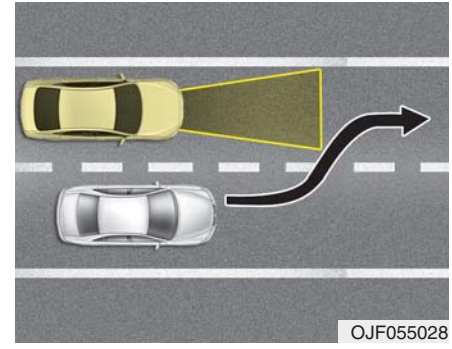
OJF055028

- Changing lanes

When a vehicle changes lanes in front of you, Forward Collision-Avoidance Assist system may not immediately detect the vehicle, especially if the vehicle changes lanes abruptly. In this case, you must maintain a safe braking distance, and if necessary, depress the brake pedal to reduce your driving speed in order to maintain a safe distance.

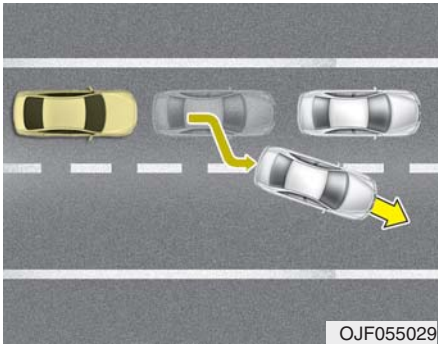

When driving in stop-and-go traffic, and a stopped vehicle in front of you merges out of the lane, Forward Collision-Avoidance Assist system may not immediately detect the new vehicle that is now in front of you. In this case, you must maintain a safe braking distance, and if necessary, depress the brake pedal to reduce your driving speed in order to maintain a safe distance.

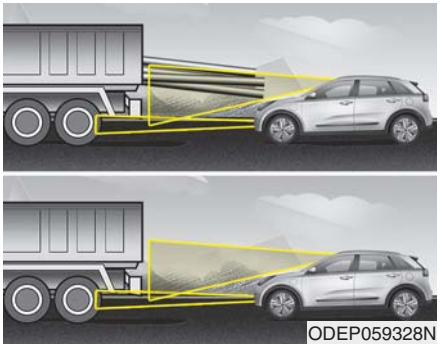

- Recognizing the vehicle

When the vehicle in front has heavy loading extended rearward, or when the vehicle in front has higher ground clearance, it may induce a hazardous situation. Always pay attention to road and driving conditions, while driving and, if necessary, depress the brake pedal to reduce your driving speed in order to maintain distance.

Detecting pedestrian or cyclist

The sensor may be limited when:

- The pedestrian or cyclist is not fully detected by the camera recognition system, for example, if the pedestrian is leaning over or is not fully walking upright
- The pedestrian or cyclist is moving very quickly or appears abruptly in the front view camera detection area
- The pedestrian or cyclist is wearing clothing that easily blends into the background, making it difficult to be detected by the front view camera recognition system
- The outside lighting is too bright (e.g. when driving in bright sunlight or in sun glare) or too dark (e.g. when driving on a dark rural road at night)

- It is difficult to detect and distinguish the pedestrian or cyclist from other objects in the surroundings, for example, when there is a group of pedestrians, cyclists or a large crowd
- There is an item similar in shape or appearance to a person
- The pedestrian or cyclist is below the sensor's viewing range
- The sensor can not identify the pedestrian's outline because of other items changing their profile, such as mobility assistance devices
- The front view camera or front radar is obstructed by a foreign object or debris
- Inclement weather such as heavy rain or snow obscures the field of view of the radar sensor or camera
- When light coming from a street light or an oncoming vehicle is reflected on a wet road surface such as a puddle in the road
- The field of view in front is obstructed by sun glare
- The windshield glass is fogged up; a clear view of the road is obstructed
- The adverse road conditions cause excessive vehicle vibrations while driving
- When the pedestrian or cyclist suddenly enters the path of travel of the vehicle
- When the cyclist in front is riding perpendicular to the direction of travel
- When there is any electromagnetic interference
- When the cyclist is near areas containing metal objects such as a construction zone, railroad, etc.
- If the bicycle material is not reflected well on the radar
- When a pedestrian or cyclist’s height is small.
- When a pedestrian or cyclist’s behavior is unstable.
- When a pedestrian or cyclist suddenly interrupts in front of the vehicle.
- When there are many pedestrians or cyclists.
- When there is an object that reflects radar well. (such as a guardrail or a nearby vehicle)

⚠ WARNING

- **Do not use Forward Collision avoidance Assist system when towing a vehicle. Application of FCA system while towing may adversely affect the safety of your vehicle or the towing vehicle.**
- **Use extreme caution when the vehicle in front of you has cargo that extends rearward from the cab, or when the vehicle in front of you has higher ground clearance.**
- **FCA system is designed to detect and monitor the vehicle ahead or detect a pedestrian or cyclist in the roadway through front view camera recognition and front radar signals. It may not always detect bicycles, motorcycles, or smaller wheeled objects such as luggage bags, shopping carts, or strollers.**

(Continued)

(Continued)

- **Never try to test the operation of FCA system. Doing so may cause severe injury or death.**
- **If the front bumper, front glass, front view camera or front radar have been replaced or repaired, have your vehicle inspected by an authorized Kia dealer.**
- **If the system detects an object that has a similar shape or characteristics of a vehicle or a pedestrian, FCA system may operate.**

✻ NOTICE

In some instances, FCA system may be cancelled when subjected to electromagnetic interference.

This device complies with Industry Canada licence-exempt RSS standard(s).

Operation is subject to the following conditions:

1. This device may not cause interference, and
2. This device must accept any interference, including interference that may cause undesired operation of the device.
3. Changes or modifications not expressly approved by the party responsible for compliance could void the user's authority to operate the device.

LANE KEEPING ASSIST (LKA) (IF EQUIPPED)

Lane Keeping Assist system detects the lane markers on the road with a front view camera at the front windshield, and assists the driver's steering to help keep the vehicle in the lanes. When the system detects the vehicle straying from its lane, it alerts the driver with a visual and audible warning, while applying a slight counter-steering torque, trying to prevent the vehicle from moving out of its lane.

⚠ WARNING

- **Driver is responsible for being aware of surroundings and steering the vehicle safely.**
- **Do not steer the steering wheel suddenly when the steering wheel is being assisted by the system.**
- **LKA system helps prevent the driver from moving out of the lane unintentionally by assisting the driver's steering. If the driver intentionally drives on one side of the driving lane, a continuous steering force may occur. However, the system is just a convenience function and the steering wheel is not always controlled. While driving, the driver should pay attention to the steering wheel.**

(Continued)

(Continued)

- **The operation of LKA system can be canceled or not work properly depending on road condition and surroundings. Always be cautious when driving.**
- **Do not disassemble the front view camera or attached any type of coating or accessories to it. If you disassemble the front view camera, take your vehicle to an authorized Kia dealer to check if the system needs a calibration.**
- **When you replace the windshield glass, front view camera or related parts of the steering, take your vehicle to an authorized Kia dealer to check if the system needs a calibration.**

(Continued)

(Continued)

- **The system detects lane markers and controls the steering wheel by a front view camera, therefore, if the lane markers are hard to detect, the system may not work properly. Always be cautious when using the system.**
- **When the lane markers are hard to detect, please refer to "DRIVER'S ATTENTION".**
- **Do not remove or damage the related parts of the front view camera system.**
- **Do not place objects on the crash pad that reflect light such as mirrors, white paper, etc. it may cause malfunction of LKA system if sunlight is reflected.**

(Continued)

(Continued)

- **You may not hear warning sound of LKA system because of the excessive audio sound.**
- **If other beeps such as the seat belt warning sound are in operation and override LKA alarming system, LKA beeps may not occur.**
- **At high vehicle speeds, the steering torque needed for assistance may not be sufficient to keep your vehicle within the lane. If so, the vehicle may move out of its lane. Always obey the speed limit when using LKA system.**

(Continued)

(Continued)

- **If you attach objects to the steering wheel, the system may not assist steering.**
- **If you attach objects to the steering wheel, hands off alarm may not work properly.**

LKA system operation

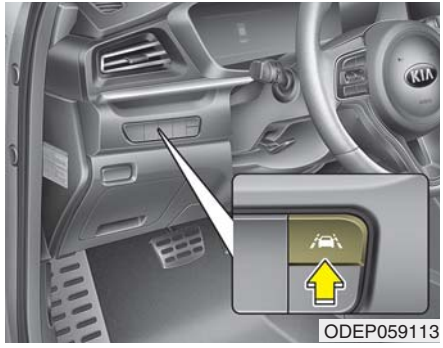

ODEP059113

To activate/deactivate LKA system:

With the ignition switch or ENGINE START/STOP button in the ON position, press the LKA system button located on the instrument panel on the lower left hand side of the driver.

The indicator ( )in the cluster display will initially illuminate white. When the indicator(white) was activated in the previous ignition cycle, the system turns on without any control. If you press the LKA system button again, the indicator on the cluster display will go off.

The color of indicator will change depend on the condition of LKA system.

- White : Sensor does not detect the lane marker or vehicle speed is less than 60 km/h (40 mph).
- Green : Sensor detects the lane marker and system is able to control the steering.

System setting

The driver can change LKA to Lane Departure Warning (LDW) or change the LKA mode from the LCD display.

“User Settings → Driver Assistance → Lane Safety → Lane Keeping Assist/Lane Departure Warning/Off”

Lane Keeping Assist

LKA mode guides the driver to keep the vehicle within the lanes. It rarely controls the steering wheel, when the vehicle drives well inside the lanes. However, it starts to control the steering wheel, when the vehicle is about to deviate from the lanes.

Lane Departure Warning

LDW alerts the driver with a visual and acoustic warning when the system detects the vehicle leaving the lane. In this mode, the steering wheel will not be controlled. When the vehicle's front wheel contacts the inside edge of lane line, the contacted line will be displayed on the LCD display.

Off

If you select 'Off', it is the same with pressing LKA ( ) button to release.

LKA activation

LKA system activation

ODEP059112L

- To see the LKA system screen on the LCD display in the cluster, Tab to the Driving Assist mode ( ).
- After LKA system is activated, if both lane markers are detected, vehicle speed is over 60 km/h (40 mph) and all the activation conditions are satisfied, a green steering wheel indicator will illuminate and the steering wheel will be controlled.

⚠ WARNING

LKA system is a system to help prevent the driver from leaving the lane. However, the driver should not solely rely on the system and should always check road conditions wen driving.

■ Lane undetected

■ Lane detected

ODEP059114L/ODEP059112L

If the speed of the vehicle is over 60 km/h (40 mph) and the system detects lane markers, the color changes from gray to white.

Warning

■ Left lane

■ Right lane

ODEP059118L/ODEP059119L

If the vehicle leaves a lane, the lane marker you cross will blink on the LCD display and the warning sound is provided.

❈ Haptic specification

If the vehicle leaves a lane, the lane marker you cross will blink on the LCD display with steering wheel vibration warning.

■ Hands off warning message while LKA system is activated

ODEP059122L

If the driver takes hands off the steering wheel for several seconds while LKA system is activated, the system will warn the driver.

⚠ WARNING

- The hands-off warning message may be delayed according to road conditions. Therefore, always have your hands on the steering wheel while driving.
- If you hold the steering wheel lightly, the system may display the hands off warning because LKA system may believe you are not grabbing the wheel.

⚠ WARNING

- The driver is responsible for accurate steering.
- Even though the steering is assisted by the system, the driver may control the steering wheel.
- Turn off the system and drive the vehicle in the below situations:
  - In bad weather
  - In bad road conditions
  - When the steering wheel needs to be controlled by the driver frequently.
  - When towing a vehicle or trailer.
- The steering wheel may feel heavier when the steering wheel is assisted by the system than when it is not.

✻ NOTICE

- Even though the steering is assisted by the system, the driver may control the steering.
- The steering wheel may feel heavier when the steering wheel is assisted by the system than when it is not.

Lane Keeping Assist system malfunction

ODEP059310L

- If there is a problem with the system a message will appear. If the problem continues the LKA failure indicator will illuminate.

LKA failure indicator

LKA failure indicator (yellow) will illuminate if LKA is not working properly. If this occurs, have the system checked by an authorized Kia dealer.

LKA system will be canceled when:

- You change lanes with the turn signal.
  - Using the turn signal to change lanes.
  - If you change lanes without the turn signal on, the steering wheel might be controlled.
- LKA system can transit to steering assist mode when the car is near to middle of the lane after system on or the lane was changed. LKA system can not assist steering if the vehicle follows lane marker too close continuously before transition to steering assist mode.
- The control of ESC (Electronic Stability Control) or VSM (Vehicle Stability Management) is activated.
- The steering will not be assisted when your drive fast on a sharp curve.

- The steering will not be assisted when vehicle speed is below 55 km/h (34 mph) and over 200 km/h (125 mph).
- The steering will not be assisted when you change lanes fast.
- The steering will not be assisted when you brake suddenly.
- The steering will not be assisted when the lane is very wide or narrow.
- The steering will not be assisted when only one side lane marker is detected.
- There are more than two lane markers such as a construction area.
- Radius of a curve is too small.
- When you turn steering wheel suddenly, LKA system will be disabled temporarily.
- Driving on a steep slope or hill.

DRIVER'S ATTENTION

The driver must be cautious in the below situations as the system may not work properly when recognition of the lane marker is poor or limited :

▶ When lane and road condition is poor

- **It is difficult to distinguish the lane marker from road when the lane marker is covered with dust or sand.**
- **It is difficult to distinguish the color of the lane marker from road.**
- **There is something looks like a lane marker.**
- **The lane marker is indistinct or damaged.**
- **The number of lanes increases/decreases or the lane lines are crossing (Driving through a toll plaza/toll gate, merged/divided lane).**
- **There are more than two lane markers.**
- **The lane marker is very thick or thin.**

(Continued)

(Continued)

- **The lane marker is not visible due to snow, rain, stain, a puddle or other factors.**
- **A shadow is on the lane marker because of a median strip, guardrail, noise barriers and others.**
- **When the lane markers are complicated or a structure substitutes for the lines such as a construction area.**
- **There are crosswalk signs or other symbols on the road.**
- **The lane suddenly disappears such as at the intersection.**
- **The lane marker in a tunnel is covered with dirt or oil and etc.**
- **The lane is very wide or narrow.**

▶ When external condition is intervened

- **The brightness of outside changes suddenly when entering/existing a tunnel or passing under a bridge.**
- **The headlamps are not on at night or in a tunnel, or light level is low.**

(Continued)

(Continued)
- There is a boundary structure in the roadway.
- The light of street, sun, or oncoming vehicle reflects from the water on the road.
- When light shines brightly in the reverse direction you drive.
- Road surface is not even.
- The distance from the vehicle ahead is very short or the vehicle ahead drives hiding the lane line.
- You drive on a steep grade or a sharp curve.
- The vehicle vibrates heavily.
- The temperature near inside mirror is very high due to direct sun light and etc.

▶ when front visibility is poor
- The lens or windshield is covered by strange materials.
- The sensor cannot detect the lane because of fog, heavy rain or snow.
- The windshield is fogged by humid air in the vehicle.
- Putting something on the crash pad and etc.

⚠ WARNING

LKA system is a system to help prevent the driver from leaving the lane. However, the driver should not solely rely on the system and should always drive safely and exercise safe driving practices.

BLIND-SPOT COLLISION WARNING (BCW) (IF EQUIPPED)

System description

BCW system uses radar sensors in the rear bumper to monitor and warn the driver of an approaching vehicle in the driver's blind spot area.

1) Blind-Spot Area

OSK3058089L

It warns by detecting the vehicles in the blind spots.

The blind spot detection range varies relative to vehicle speed.

Note that if your vehicle is traveling much faster than the vehicles around you, the warning will not occur.

2) Closing at high speed

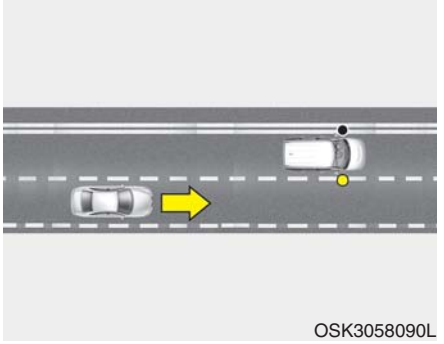

OSK3058090L

BCW system feature will alert you when a vehicle is approaching in an adjacent lane at a high rate of speed. If the driver activates the turn signal when the system detects an oncoming vehicle, the system sounds an audible alert.

⚠ WARNING

- **BCW system is a supplemental system to assist you. Do not entirely rely on the system.**

  Always pay attention, while driving, for your safety.
- **Always be aware of road conditions while driving and be alert for unexpected situations even though BCW system is operating.**
- **BCW system is not a substitute for proper and safe driving. Always drive safely and use caution when changing lanes or backing up the vehicle. BCW may not detect every object alongside the vehicle.**

System setting and activation

System setting

- The driver can activate the system by placing the ignition switch or ENGINE START/STOP button to the ON position and by selecting “User Settings → Driver Assistance → Blind-Spot Safety”
  - BCW system turns on and gets ready to be activated when “Warning Only” is selected. Then, if a vehicle approaches the driver's blind spot area a warning sounds.
  - The system is deactivated and the indicator on the BCW button is extinguished when 'Off' is selected.

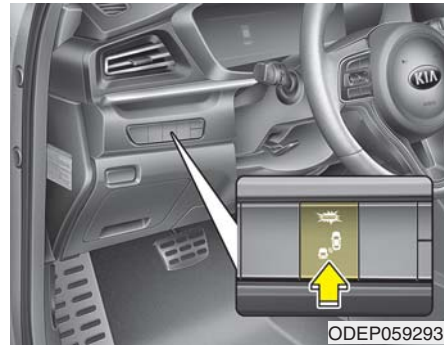

ODEP059293

- If you press BCW button while “Warning Only” is selected the indicator on the button extinguishes and the system deactivates.
- If you press BCW button while the system is cancelled the indicator on the button illuminates and the system activates. In this case, the system returns to the state before the vehicle turned off. When the system is initially turned on and when the motor is turned off then on again while the system is in activation, the warning light will illuminate for 3 seconds on the outside rearview mirror.
- If the vehicle is turned off then on again, the system maintains the previous state.

Warning Timing

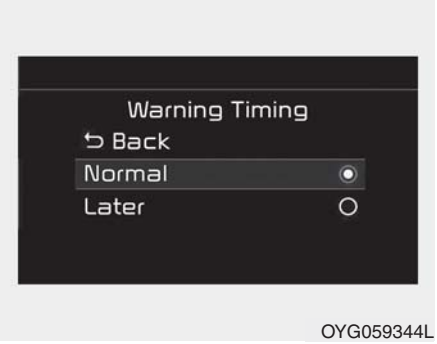

OYG059344L

- The driver can select the initial warning activation time select “User Settings → Driver Assistance → Warning Timing”
- The options for the initial Blind-Spot Collision Warning includes the following:

- Normal:

  When this condition is selected, the initial Blind-Spot Collision Warning is activated normally. If this setting feels too sensitive change the option to ‘Normal’.

  The warning activation time may feel late if the side/rear vehicle abruptly accelerates.

- Later:

  Select this warning activation time when the traffic is light and you are driving in a low speed.

✻ NOTICE

If you change the warning timing, the warning time of other systems may change. Always be aware before changing the warning timing.

Operating conditions

The system enters the ready status, when 'Warning Only' is selected and the following conditions are satisfied:

• Warning Only

(1) Blind-Spot Collision Warning system will activate when:

- The vehicle speed above approximately 30 km/h (20 mph).

Warning message and system control

Blind-Spot Collision Warning system

■ First stage alert (left) ■ First stage alert (right)

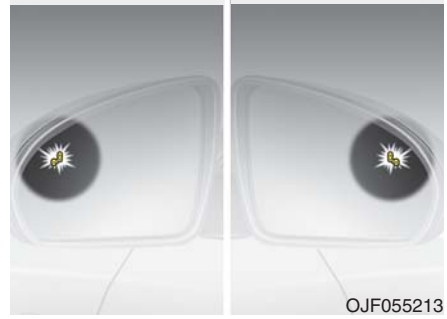

First stage alert

If a vehicle is detected within the boundary of the system, a warning light will illuminate on the outside rearview mirror and the head up display (if equipped).

Once the detected vehicle is no longer within the blind spot area, the warning will turn off according to the driving conditions of the vehicle.

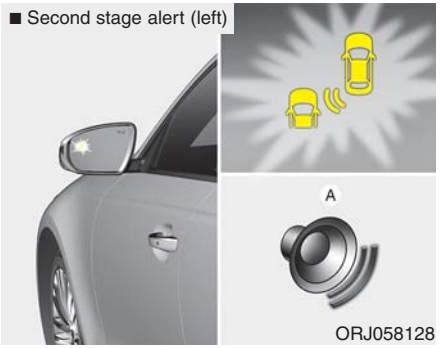

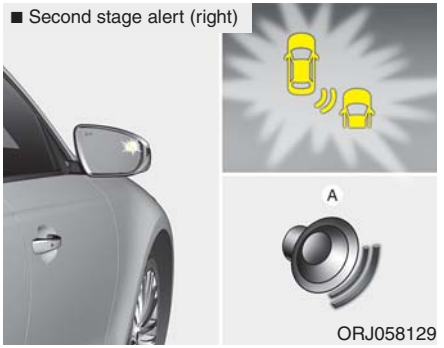

[A] : Warning sound

Second stage alert

A warning chime to alert the driver will activate when:

1. At the First stage alert (the warning light illuminate on the outside review mirror and the head up display (if equipped) AND
2. The turn signal is applied (same side as where the vehicle is being detected).

When this alert is activated, the warning light on the outside rearview mirror and the head up display (if equipped) will also blink. And a warning chime will sound.

If you turn off the turn signal indicator, the second stage alert will be deactivated.

Once the detected vehicle is no longer within the blind spot area, the warning will turn off according to the driving conditions of the vehicle.

⚠ WARNING

- **The warning light on the outside rearview mirror will illuminate whenever a vehicle is detected at the rear side by the system.**

  To avoid accidents, do not focus only on the warning light and neglect to check the vehicle surroundings.
- **Drive safely even though the vehicle is equipped with Blind-Spot Collision Warning system. Do not solely rely on the system but check your surroundings before changing lanes or backing the vehicle up.**
- **The system may not alert the driver in some situations so always check your surroundings while driving.**

⚠ CAUTION

- ***The driver should always use extreme caution while operating the vehicle, whether or not the warning light on the outside rearview mirror illuminates or there is a warning alarm.***
- ***Playing the vehicle audio system at high volume may offset Blind-Spot Collision Warning system warning sounds.***
- ***The warning of the Blind-Spot Collision Warning system may not sound while other system's warning sounds.***

Detecting Sensor

■ Rear corner radars

ODEP059158

The rear corner radars are the sensors inside the rear bumper for detecting the side/rear areas. Always keep the rear bumper clean for proper operation of the system.

⚠ CAUTION

- ***The system may not work properly when the bumper has been damaged, or if the rear bumper has been replaced or repaired.***
- ***The sensing range differs somewhat according to the width of the road. When the road is narrow, the system may detect other vehicles in the next lane.***
- ***The system may turn off due to strong electromagnetic waves.***
- ***Always keep the sensor or near the sensor clean.***
- ***NEVER arbitrarily disassemble the sensor component nor apply any impact on the sensor component.***
- ***Be careful not to apply unnecessary force on the radar sensor or sensor cover. If the sensor is forcibly moved out of proper alignment, the system may not operate correctly. In this case, a warning message may not be displayed.***

(Continued)

(Continued)

Have the vehicle inspected by an authorized Kia dealer.

- ***Do not apply foreign objects such as a bumper sticker or a bumper guard near the radar sensor or apply paint to the sensor area. Doing so may adversely affect the performance of the sensor.***
- ***NEVER install any accessories or stickers on the front windshield, nor tint the front windshield.***
- ***Pay extreme caution to keep the camera sensor out of water.***
- ***NEVER locate any reflective objects (i.e. white paper, mirror) over the crash pad. Any light reflection may cause a malfunction of the system.***

Warning message

Blind-Spot Collision Warning system disabled. Radar blocked

- This warning message may appear when :
  - One or both of the sensors on the rear bumper is blocked by dirt or snow or a foreign object.
  - Driving in rural areas where the sensor does not detect another vehicle for an extended period of time.
  - When there is inclement weather such as heavy snow or rain.

If any of these conditions occur, the light on the BCW button and the system will turn off automatically.

Turn off BCW system (if equipped) when a trailer or carrier is installed.

- Press the BCW button (the indicator on the button extinguish) or “User Settings → Driver Assistance → Blind-Spot Safety → Off”.
- Deactivate RCCW system by deselecting

  “User Settings → Driver Assistance → Blind-Spot Safety → Rear Cross-Traffic Safety”.

  If you use BCW system, remove a trailer or carrier.

When the BCW canceled warning message is displayed in the cluster, check to make sure that the rear bumper is free from any dirt or snow in the areas where the sensor is located. Remove any dirt, snow, or foreign material that could interfere with the radar sensors.

After any dirt or debris is removed, BCW should operate normally after about 10 minutes of driving the vehicle.

If the system still does not operate normally, have your vehicle inspected by an authorized Kia dealer.

OJF058435L

Check Blind-Spot Collision Warning system

If there is a problem with BCW system, a warning message will appear and the light on the switch will turn off. The system will turn off automatically. We recommend that you have your vehicle inspected by an authorized Kia dealer.

Limitations of the system

The driver must be cautious in the below situations, because the system may not detect other vehicles or objects in certain circumstances.

- When a trailer or carrier is installed.
- The vehicle drives in inclement weather such as heavy rain or snow.
- The sensor is polluted with rain, snow, mud, etc.
- The rear bumper where the sensor is located is covered with a foreign object such as a bumper sticker, a bumper guard, a bike rack, etc.
- The rear bumper is damaged, or the sensor is out of the original default position.
- The vehicle height gets lower or higher due to heavy loading in a liftgate, abnormal tire pressure, etc.
- When the temperature of the rear bumper is high.
- When the sensors are blocked by other vehicles, walls or parking-lot pillars.

- The vehicle drives on a curved road.
- The vehicle drives through a tollgate.
- The road pavement (or the peripheral ground) abnormally contains metallic components (i.e. possibly due to subway construction).
- There is a fixed object near the vehicle, such as a guardrail.
- While going down or up a steep road where the height of the lane is different.
- Driving on a narrow road where trees or grass or overgrown.
- Driving in rural areas where the sensor does not detect another vehicle or structure for an extended period of time.
- Driving on a wet road.
- Driving on a road where the guardrail or wall is in double structure.
- A big vehicle is near such as a bus or truck.
- When the other vehicle approaches very close.
- When the other vehicle passes at a very fast speed.
- While changing lanes.
- If the vehicle has started at the same time as the vehicle next to you and has accelerated.
- When the vehicle in the next lane moves two lanes away from you OR when the vehicle two lanes away moves to the next lane from you.
- A motorcycle or bicycle is near.
- A flat trailer is near.
- If there are small objects in the detecting area such as a shopping cart or a baby stroller.
- If there is a low height vehicle such as a sports car.
- The brake pedal is depressed.
- ESC (Electronic Stability Control) is activated.
- ESC (Electronic Stability Control) malfunctions.
- The tire pressure is low or a tire is damaged.
- The brake is reworked.
- The vehicle abruptly changes driving direction.
- The vehicle makes sharp lane changes.
- The vehicle sharply stops.
- Temperature is extremely low around the vehicle.
- The vehicle severely vibrates while driving over a bumpy road, uneven/bumpy road, or concrete patch.
- The vehicle drives on a slippery surface due to snow, water puddle, or ice.
- Lane Departure Warning system or Lane Keeping Assist system do not operate normally.

  For more information refer to “Lane Keeping Assist (LKA)” in this chapter.

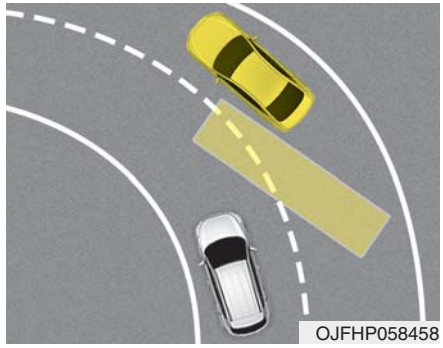

- Driving on a curve

BCW system may not operate properly when driving on a curved road. In certain instances the system may not detect the vehicle in the next lane.

Always pay attention to road and driving conditions, while driving.

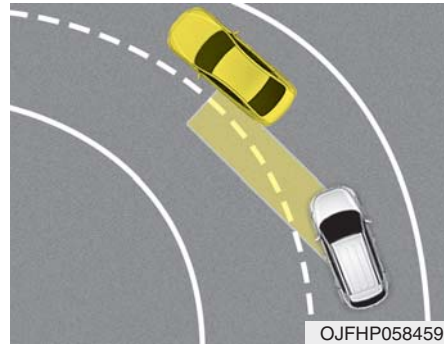

BCW system may not operate properly when driving on a curved road. In certain instances the system may recognize a vehicle in the same lane.

Always pay attention to road and driving conditions, while driving.

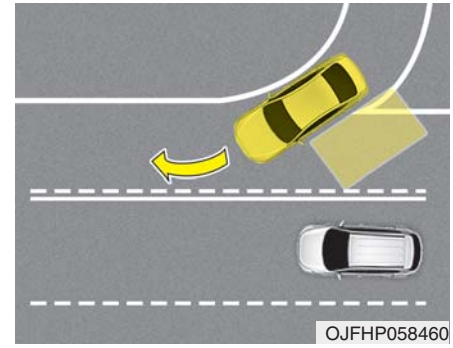

- Driving where the road is merging/dividing

BCW system may not operate properly when driving where the road is merging/dividing. In certain instances the system may not detect the vehicle in the next lane.

Always pay attention to road and driving conditions, while driving.

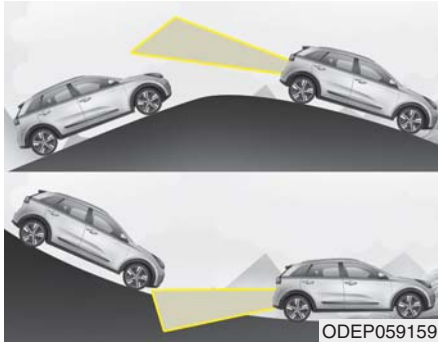
ODEP059159

- Driving on a slope

BCW system may not operate properly when driving on a slope. In certain instances the system may not detect the vehicle in the next lane.

Also, in certain instances the system may wrongly recognize the ground or structures.

Always pay attention to road and driving conditions, while driving.

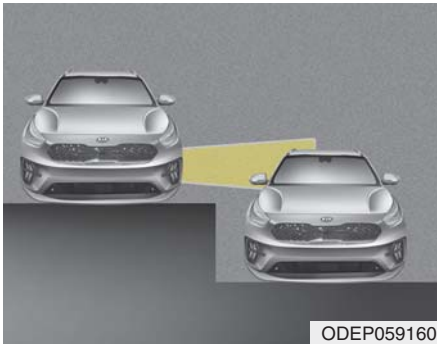
ODEP059160

- Driving where the heights of the lanes are different

BCW system may not operate properly when driving where the heights of the lanes are different.

In certain instances, the system may not detect the vehicle on a road with different lane heights (underpass joining section, grade separated intersections, etc.).

Always pay attention to road and driving conditions, while driving.

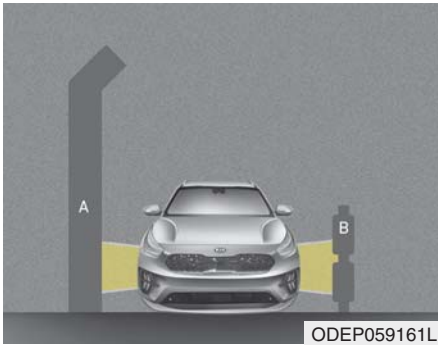

ODEP059161L

[A] : noise barrier, [B] : guardrail

- Driving where there is a structure beside the road

BCW system may not operate properly when driving where there is structure beside the road.

In certain instances, the system may wrongly recognize the structures (noise barriers, guardrail, double guardrail, median strip, bollard, street light, road sign, tunnel wall, etc.) beside the road.

Always pay attention to road and driving conditions, while driving.

DRIVER ATTENTION WARNING (DAW) (IF EQUIPPED)

DAW system displays the driver's attention level by integrating driving pattern and informs the driver when the vehicle ahead depart while stopping

Low Activity Warning

Display the driver's attention level and advise taking a break if the attention level is below a certain level.

System setting

- To turn ON Driver Attention Warning system, turn on the engine, and then selecting "User Settings → Driver Assistance → Driver Attention Warning → Low Activity Warning" on the LCD display.

Warning Timing

OYG059344L

- The driver can select the initial warning activation time select "User Settings → Driver Assistance →Warning Timing" on the LCD display. The options for the initial Inattentive Driving Warning includes the following:

- Normal :

  Driver Attention Warning system helps alert the driver of his/her fatigue level or inattentive driving practices faster than 'Later' mode.

- Later :

  Driver Attention Warning system helps alert the driver of his/her fatigue level or inattentive driving practices later than Normal mode.

- The set-up of Driver Attention Warning system will be maintained, as selected, when the engine is re-started.

✻ NOTICE

Other driver assistance systems like Forward Collision-Avoidance Assist, etc. can be changed when warning time setting is changed.

Display of the driver's attention level

■ System off

OJF058422L

■ Attentive driving

OJF058423L

■ Inattentive driving

OJF058424L

- The driver can monitor their driving conditions on the LCD display.
  - Select ‘Driving Assist’ mode and then “Driver Attention Warning” (For more information, refer to “LCD Display” in chapter 4.)

  If your vehicle is equipped with additional Infotainment System, please scan the QR code in a separately supplied Car Infotainment System Quick Reference Guide.
- The driver's attention level is displayed on the scale of 1 to 5. The lower the level is, the more inattentive the driver is.
- The level decreases when the driver does not take a break for a certain period of time.

Take a break

OJF058426L

- The "Consider taking a break" message appears on the LCD display and a warning sounds in order to suggest the driver to take a break, when the driver's attention level is below 1.
- If the total driving time is less than 10 minutes, Driver Attention Warning system does not suggest the driver take a break. And the system does not repeat break suggestion within 10 minutes after sending warning message.

⚠ CAUTION

- ***It may suggest a break according to the driver’s driving pattern or habits even if the driver doesn’t feel fatigued.***
- ***The warning of Driver Attention Warning system may not sound while other system's warning sounds such as the seatbelt warning sound.***

Resetting the function

- The last break time is set to 00:00 and the driver's attention level is set to 5 (very attentive) when the driver resets the Inattentive driving warning function.
- Inattentive driving warning function resets in the following situations.
  - The engine is turned OFF.
  - The driver unfastens the seat belt and then opens the driver's door.
  - The vehicle is stopped for more than 10 minutes.

System standby

OJF058427L

Driver Attention Warning system enters the ready status and displays the 'Standby' screen in the following situations.

- Driving speed is over 180 km/h (110 mph).

System malfunction

OJF058429L

When the "Check Driver Attention Warning (DAW) system" warning message appears, the system is not working properly. If this occurs, have the system checked by an authorized Kia dealer.

⚠ WARNING

- **Driver Attention Warning system is not a substitute for safe driving practices, but a convenience function only. It is the driver's responsibility to always drive cautiously and safely.**
- **A fatigued driver should take a break, even if there is no suggestion to do so by the Driver Attention Warning system.**

✻ NOTICE

Driver Attention Warning system utilizes the front view camera sensor on the front windshield for its operation. To keep the front view camera sensor in the best condition, you should observe the followings:

- **Do not disassemble camera temporarily for tinted window or attaching any types of coatings and accessories. If you disassemble a camera and assemble it again, take your vehicle to an authorized Kia dealer and have the system checked.**
- **Do not locate any reflective objects (i.e. white paper, mirror) over the dashboard. Any light reflection may cause a mal-function of Driver Attention Warning system.**

(Continued)

(Continued)

- **Pay extreme caution to keep the front view camera out of water.**
- **Do not arbitrarily disassemble the camera assembly, nor apply any impact on the camera assembly.**
- **Playing the vehicle audio system at high volume may offset the Driver Attention Warning system warning sounds.**

  For more information of front view camera, refer to “Lane Keeping Assist (LKA)”.

⚠ **CAUTION**

Driver Attention Warning system may not properly operate with limited alerting in the following situations:

- ***The system will not operate for about 15 seconds when restarting the engine or initializing the front camera such as rebooting, etc.***
- ***The lane detection performance is limited. (For more information, refer to "Lane Keeping Assist (LKA)" in this chapter.)***
- ***The vehicle is violently driven or is abruptly turned for obstacle avoidance (e.g. construction area, other vehicles, fallen objects, bumpy road).***
- ***Intentionally frequent lane cut-in***

(Continued)

(Continued)

- ***The vehicle drives on a curvy road.***
- ***The vehicle drives on a bumpy road.***
- ***The vehicle drives through a windy area.***
- ***The vehicle is controlled by the other driver assistance systems such as Lane Keeping Assist system.***

Leading Vehicle Departure Alert

This function reminds the driver the leading vehicle's driving departure after stopping.

Function setting

With the vehicle ON, Leading Vehicle Departure Alert function turns on and gets ready to be activated when the "User Settings → Driver Assistance → Driver Attention Warning → Leading Vehicle Departure Alert" is selected on the cluster. The function stops operation when the setting is deactivated. However, if the vehicle is turned off then on again, the function maintains the previous state.

Operating conditions

If the driver does not take action for a certain period of time after the vehicle in front departs, the "Leading vehicle is driving away" message is displayed on the cluster.

⚠ WARNING

- **This function is a driver assistance device and may not alert the driver even after the leading vehicle's departure.**
- **Even if you are alerted of the leading vehicle's departure, always check the traffic conditions yourself before safely moving the vehicle.**

⚠ CAUTION

- ***Leading Vehicle Departure Alert function utilizes the front camera on the front windshield for its operation. To keep the front camera in the best condition.***

  For more information of front view camera, refer to "Lane Keeping Assist (LKA)".
- ***The function may not operate for 15 seconds after the engine is started or the front view camera is initialized.***

✻ NOTICE

The function may not alert or may not work properly when:

- **A pedestrian or a bicycle is ahead**
- **A car cut in ahead.**
- **Meet a traffic jam during the curve or right turn driving.**
- **Busy road such as reducing lanes.**
- **Stopping at a shoulder, rest area or a parking lot.**
- **If the vehicle head makes a sudden start or the U-turn.**
- **If the vehicle is stopped at the speed bumps or a slope.**

CRUISE CONTROL (CC) (IF EQUIPPED)

■ Type A

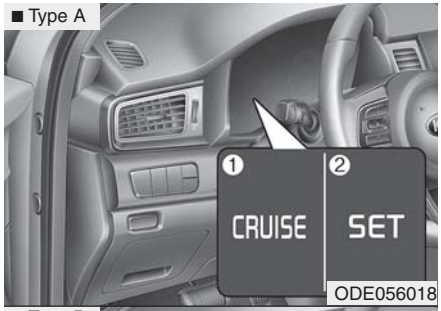

■ Type B

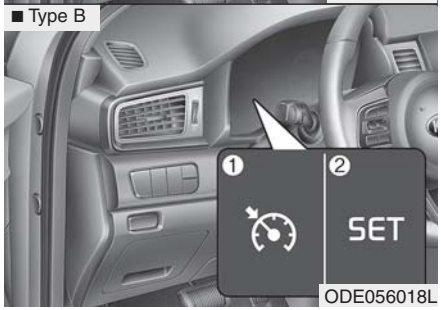

1. Cruise indicator (CRUISE)
2. Cruise set indicator

Cruise Control system allows you to program the vehicle to maintain a constant speed without pressing the accelerator pedal.

This system is designed to function above approximately 30 km/h (20 mph).

⚠ WARNING

- **If the cruise control is left on, (cruise indicator light is illuminated), the cruise control can be switched on accidentally. Keep the cruise control system off when the cruise control is not in use, to avoid inadvertently setting a speed.**
- **Use the cruise control system only when traveling on open highways in good weather.**

(Continued)

(Continued)

- **Do not use the cruise control when it may not be safe to keep the vehicle at a constant speed, for instance, driving in heavy or varying traffic, or on slippery (rainy, icy or snow-covered) or winding roads or over 6% up-hill or down-hill roads.**
- **Pay particular attention to the driving conditions whenever using the cruise control system.**
- **Be careful when driving downhill using the cruise control system, which may increase the vehicle speed.**

✻ NOTICE

- **During normal cruise control operation, when the SET switch is activated or reactivated after applying the brakes, the cruise control will energize after approximately 3 seconds. This delay is normal.**
- **To activate cruise control, depress the brake pedal at least once after placing the ignition switch or ENGINE START/STOP button to the ON position or starting the engine. This is to check if the brake switch which is important part to cancel cruise control is in normal condition.**

Cruise control switch

ODE056019

CANCEL : Cancels cruise control operation.

CRUISE : Turns cruise control system on or off.

RES+ : Resumes or increases cruise control speed.

SET- : Sets or decreases cruise control speed.

To set cruise control speed:

ODE056019

1. Press the CRUISE button on the steering wheel, to turn the system on. The cruise indicator light will illuminate.
2. Accelerate to the desired speed, which must be more than approximately 30 km/h (20 mph).

ODE056020

3. Move the switch down (to SET-), and release it at the desired speed. The cruise set indicator light will illuminate. Release the accelerator pedal at the same time. The desired speed will automatically be maintained.

On a steep grade, the vehicle may slow down or speed up slightly while going downhill.

To increase cruise control set speed:

ODE056021

Follow either of these procedures:

- Move the switch up (to RES+) and hold it. Your vehicle will accelerate. Release the switch at the speed you want.
- Move the switch up (to RES+) and release it immediately. The cruising speed will increase by 1 km/h (or 1 mph) each time you move the switch up (to RES+) in this manner.

To decrease the cruising speed:

ODE056020

Follow either of these procedures:

- Move the switch down (to SET-) and hold it. Your vehicle will gradually slow down. Release the switch at the speed you want to maintain.
- Move the switch down (to SET-) and release it immediately. The cruising speed will decrease by 1 km/h (or 1 mph) each time you move the switch down (to SET-) in this manner.

To temporarily accelerate with the cruise control on:

If you want to speed up temporarily when the cruise control is on, depress the accelerator pedal. Increased speed will not interfere with cruise control operation or change the set speed.

To return to the set speed, take your foot off the accelerator pedal.

To cancel cruise control, do one of the following:

ODE056022

- Depress the brake pedal.
- Shift into N (Neutral) if equipped with an Dual clutch transmission.
- Press the CANCEL button located on the steering wheel.
- Decrease the vehicle speed lower than the memory speed by approximately 20 km/h (12 mph).
- Decrease the vehicle speed to less than approximately 25 km/h (15 mph).

Each of these actions will cancel cruise control operation (the cruise set *indicator light will go off), but it will not turn the system off. If you wish to resume cruise control operation, move up the switch (to RES+) located on your steering wheel. You will return to your previously preset speed.*

To resume cruising speed at more than approximately 30 km/h (20 mph).

ODE056021

If any method other than the CRUISE button was used to cancel cruising speed and the system is still activated, the most recent set speed will automatically resume when the RES+ switch is pushed.

It will not resume, however, if the vehicle speed has dropped below approximately 30 km/h (20 mph).

To turn cruise control off, do one of the following:

- Press the CRUISE button (the cruise indicator light will be turn off).
- If your vehicle equipped the speed limit system, press the CRUISE button twice. (The cruise indicator light will be turn off.)
- Turn the ignition off.

Both of these actions cancel cruise control operation. If you want to resume cruise control operation, repeat the steps provided in “To set cruise control speed” on the previous page.

SMART CRUISE CONTROL (SCC) (IF EQUIPPED)

ODEP059080L

① Cruise indicator (CRUISE)
② Set speed
③ Vehicle-to-vehicle distance

Smart Cruise Control system allows you to program the vehicle to maintain constant speed and distance detecting the vehicle ahead without depressing the accelerator or brake pedal.

To see SCC screen on the LCD display on the cluster, select Driving Assist ( ). For more informations, refer to “LCD Display Modes” in chapter 4.

⚠ WARNING

For your safety, please read the owner's manual before using Smart Cruise Control system.

✻ NOTICE

To activate Smart Cruise Control, depress the brake pedal at least once after placing the ignition switch or ENGINE START/STOP button to the ON position or starting the engine. This is to check if the brake switch which is important part to cancel smart cruise control is in normal condition.

Smart Cruise Control switch

CANCEL : Cancels cruise control operation.

CRUISE : Turns cruise control system on or off.

RES + : Sets or increases cruise control speed.

SET - : Sets or decreases cruise control speed.

: Sets vehicle-to-vehicle distance

Smart Cruise Control speed To set Smart Cruise Control Speed :

ODE056023

1. Press the CRUISE button, to turn the system on. The Cruise indicator (CRUISE) in the instrument cluster will illuminate.
2. Accelerate to the desired speed.

   Smart Cruise Control speed can be set as follows:

   - 10 km/h (5 mph) ~ 180 km/h (110 mph) : when there is no vehicle in front
   - 0 km/h (0 mph) ~ 180 km/h (110 mph) : when there is a vehicle in front

ODE056024

3. Move the switch down (to SET-), and release it at the desired speed. The set speed and vehicle to vehicle distance on the LCD screen will illuminate.
4. Release the accelerator pedal. The desired speed will automatically be maintained.

If there is a vehicle in front of you, the speed may decrease to maintain the distance to the vehicle ahead.

On a steep grade, the vehicle may slow down or speed up slightly while going uphill or downhill.

Vehicle speed may decrease on an upward slope and increase on a downward slope.

The speed will be set to 0 ~30 km/h (0 ~ 20 mph) when there is a vehicle ahead and your vehicle speed is 0 ~30 km/h (0 ~ 20 mph).

OYG059346L

▶ SCC system Not Operating Conditions

- The driver's door is opened.
- The vehicle is shifted to N (Neutral) / R (Reverse) / P (Parking).
- The parking brake is applied.
- The vehicle speed is not within the specified SCC range.
- The ESC (Electronic Stability Control), TCS (Traction Control System)or ABS is operating.
- The ESC (Electronic Stability Control), TCS (Traction Control System)or ABS is off.

The ESC (Electronic Stability Control), TCS (Traction Control System)or ABS is operating.

- The sensor cover is extremely contaminated.
- The engine performance is abnormal.
- The Forward Collision-Avoidance Assist system is activated.
- The engine RPM is in the red zone.
- The front radar is abnormal.

To increase Smart Cruise Control system set speed:

ODE056025

Follow either of these procedures:

- Move the switch up (to RES+), and hold it. Your vehicle set speed will increase by 10 km/h (5 mph). Release the switch at the speed you want.
- Move the switch up (to RES+), and release it immediately. The cruising speed will increase by 1.0 km/h (1.0 mph) each time you move the switch up (to RES+) in this manner.

- Although SCC will operate to a maximum setting of up to 180km/h (110 mph), all local speed limit laws must always be followed.

⚠ WARNING

Check driving conditions before using the switch as driving speed increases rapidly when you push up and hold the switch.

To decrease Smart Cruise Control system set speed:

ODE056024

Follow either of these procedures:

- Move the switch down (to SET-), and hold it. Your vehicle set speed will decrease by 10 km/h (5 mph). Release the switch at the speed you want.
- Move the switch down (to SET-), and release it immediately. The cruising speed will decrease by 1.0 km/h (1.0 mph) each time you move the switch down (to SET-) in this manner.
- You can set the speed to 30 km/h (20 mph).

To temporarily accelerate with Smart Cruise Control system on :

If you want to speed up temporarily when the cruise control is on, depress the accelerator pedal. Increased speed will not interfere with SCC system operation or change the set speed.

To return to the set speed, take your foot off the accelerator.

If you move the switch down (to SET-) at increased speed, the cruising speed will be set again.

⚠ WARNING

Be careful when accelerating temporarily, because the speed is not controlled automatically at this time even if there is a vehicle in front of you.

Smart Cruise Control system will be temporarily canceled when:

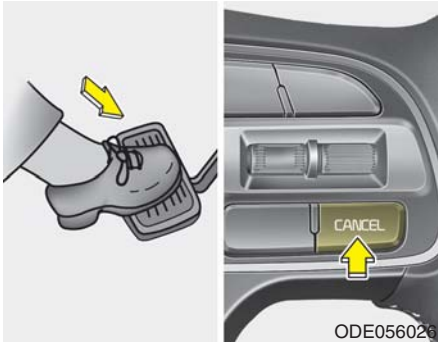

Canceled manually

Smart Cruise Control system is temporarily canceled when the brake pedal is depressed or the CANCEL button is pressed. The speed and vehicle to vehicle distance indicator on the cluster is disappeared and the cruise indicator (CRUISE) is illuminated continuously.

Canceled automatically

SCC system will automatically cancel in the following situations:

- The driver's door is opened.
- The shift lever is shifted to N (Neutral), R (Reverse) or P (Paking).
- The EPB (Electronic Parking Brake) is applied.
- The vehicle speed is over 190 km/h (120 mph)
- The ESC, ABS or TCS is operating.
- The ESC is turned off.
- The sensor or the cover is dirty or blocked with foreign matter.
- The accelerator pedal is continuously depressed for long time.
- The engine speed is in dangerous range.
- SCC system has malfunctioned.
- When the braking control is operated for Forward Collision-Avoidance Assist system
- The vehicle stops and goes repeatedly for a long period of time.
- When the parking brake is locked
- Speed of the vehicle has been decreased to less than 10 km/h (5 mph)
- Engine has some problems

Each of these actions will cancel SCC system operation. (The set speed of the cluster is displayed in gray shades and the distance indicator with the vehicle ahead is disappeared.)

In a condition the smart cruise control is cancelled automatically, Smart Cruise Control system will not operate even though the RES+ or SET- switch is moved.

The EPB (Electronic Parking Brake) is applied when SCC auto release condition occurs while SCC is in use.

⚠ CAUTION

If Smart Cruise Control system is cancelled by other than the reasons mentioned, have the system checked by an authorized Kia dealer.

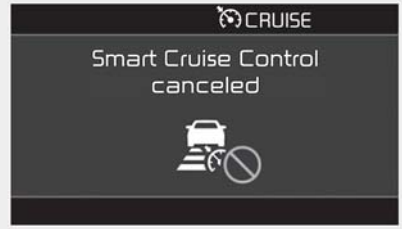

OJF058397L

⚠ CAUTION

If the system is automatically cancelled, the warning chime will sound and a message will appear for a few seconds.

You must adjust the vehicle speed by depressing the accelerator or brake pedal according to the road condition ahead and driving condition.

Always check the road conditions. Do not rely on the warning chime.

To restart Smart Cruise Control system :

ODE056025

If any method other than the CRUISE button was used to cancel cruising speed and the system is still activated, the cruising speed will automatically resume when you move the switch up (to RES+).

If you move the switch up (to RES+), the speed will resume to the recently set speed. However, if vehicle speed drops below 10 km/h (5 mph), it will resume when there is a vehicle in front of your vehicle.

✻ NOTICE

To reduce the risk of an accident, always check the road conditions when reactivating the smart cruise control using the RES+ switch to ensure the road conditions permit safe use of the cruise control.

To turn Smart Cruise Control system off:

ODE056023

Press the CRUISE button. (the CRUISE indicator in the instrument cluster will go off).

When Smart Cruise Control system is not needed, press the [CRUISE] switch and deactivate the system.

⚠ WARNING

Take the following precautions :

- **If Smart Cruise Control system is left on, (cruise indicator in the instrument cluster illuminated) Smart Cruise Control system can be activated unintentionally. Keep Smart Cruise Control system off (cruise indicator turn off) when Smart Cruise Control system is not used.**
- **Do not leave the vehicle when it is stopped by SCC system. If it is necessary to leave the vehicle, turn off SCC system and move the gear shift to P (Parking), engage the parking brake, and turn off the engine while depressing the brake pedal.**
- **Use SCC system only on roads with good traffic conditions. Do not use SCC system in the following situations because of the high risk of an accident.**

(Continued)

(Continued)

- Highway interchange and tollgate
- Road surrounded by multiple steel constructions (subway construction, steel tunnel, etc)
- Parking lot
- Lanes beside guard rail on a road
- Slippery road with rain, ice, or snow covered
- Abrupt curved road
- Steep hills
- Windy roads
- Off roads
- Rods under construction
- Rumble strip
- When driving near crash barriers

(Continued)

(Continued)

- When the vehicle sensing ability decreases due to vehicle modification that causes a difference in the level of the vehicle's front and rear
- When driving with limited view (possibly due to bad weather, such as fog, snow, rain or sandstorm)

• Pay particular attention to the driving conditions whenever using the smart cruise control system.

• Smart Cruise Control system is not a substitute for safe driving. It is the responsibility of the driver to always check the speed and distance of the vehicle ahead.

• Be careful when driving downhill using SCC system.

(Continued)

(Continued)

• Smart Cruise Control system should not be used when the vehicle is being towed.

• Always set the vehicle speed under the applicable speed limit.

• Unexpected situations may lead to accidents. Pay continuous attention to road conditions and your surroundings even when the Smart Cruise Control System is operating.

Set SCC Reaction

The sensitivity of vehicle speed when following the front vehicle to maintain the set distance can be adjusted.

The acceleration speed (reaction) for following the front vehicle is set in conjunction with the DRIVE MODE button.

SCC Reaction

- Fast:

  Vehicle speed following the front vehicle to maintain the set distance is faster than normal speed.
- Normal:

  Vehicle speed following the front vehicle to maintain the set distance is normal
- Slow:

  Vehicle speed following the front vehicle to maintain the set distance is slower than normal speed.

Vehicle to vehicle distance setting

To set vehicle to vehicle distance:

ODE056027

This function allows you to program the vehicle to maintain relative distance to the vehicle ahead without depressing the accelerator pedal or brake pedal.

The vehicle to vehicle distance will automatically activate when Smart Cruise Control system is on.

Select the appropriate distance according to road conditions and vehicle speed.

Each time the button is pressed, the vehicle to vehicle distance changes as follows:

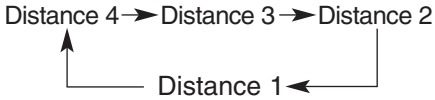

For example, if you drive at 90 km/h (56 mph), the distance maintain as follows;

Distance 4 - approximately 52.5 m (172 feet)

Distance 3 - approximately 40 m (130 feet)

Distance 2 - approximately 32.5 m (106 feet)

Distance 1 - approximately 25 m (82 feet)

✻ NOTICE

The distance is set to the last set distance when the system is used for the first time after starting the engine.

When the lane ahead is clear :

ODEP059093

The vehicle speed will maintain the set speed.

When there is a vehicle ahead of you in your lane :

• Level 4

ODEP059080

• Level 3

ODEP059081

• Level 2

ODEP059082

• Level 1

ODEP059083

- The vehicle will maintain the set speed, when the lane ahead is clear.
- The vehicle will slow down or speed up to maintain the selected distance, when there is a vehicle ahead of you in the lane. (A vehicle will appear in front of your vehicle in the LCD display only when there is an actual vehicle in front of you)
- If the vehicle ahead speeds up, your vehicle will travel at a steady cruising speed after accelerating to the selected speed.
- If you turn on the driver's side turn signal when there is a vehicle ahead, your vehicle may temporarily accelerate to assist you in changing lanes.

Collision Warning

OJF058389L

If there is a high risk of collision due to sudden braking of the front vehicle or lack of safety distance with the vehicle ahead during SCC driving, so that if the driver's brake or steering wheel operation is required, the Distance Step with the vehicle ahead will blink on the cluster and a collision warning will sound.

In this case, immediately reduce the speed.

⚠ CAUTION

- ***Even if the warning message does not appear and warning chime does not sound, always pay attention to driving conditions to prevent dangerous situations from occurring.***
- ***Playing the vehicle audio system at high volume may cause the occupants to not hear the system warning sounds.***
- ***If the vehicle cannot keep the enough set distance, the warning will sound and blink on the cluster. If a warning sounds, check the nearby traffic condition and if necessary, control the speed by depressing the brake. Always pay attention in case of danger, even if there are no warning sound.***

⚠ WARNING

- **If the speed of the vehicle ahead is similar to or faster than your vehicle, the system may not warn you as you do not maintain enough set distance. Always pay attention in case of danger, even if there is no warning sound.**
- **If the speed of the vehicle ahead is too slow, the system may not warn you as you do not maintain enough set distance. Always pay attention in case of danger, even if there is no warning sound.**
- **If you set SCC speed and depress the accelerator pedal, the system may not warn you as you do not maintain enough set distance. Always pay attention in case of danger, even if there is no warning sound.**

⚠ CAUTION

ODEP059084L

If the vehicle ahead (vehicle speed: less than 30 km/h (20 mph) disappears to the next lane, the warning chime will sound and a message will appear. Adjust your vehicle speed for vehicles or objects that can suddenly appear in front of you by depressing the brake pedal according to the road condition ahead and driving condition.

In traffic situation

OJF058402L

Use switch or pedal to accelerate

- In traffic, your vehicle will stop if the vehicle ahead of you stops. Also, if the vehicle ahead of you starts moving, your vehicle will start as well. However, if the vehicle stops you must depress the accelerator pedal or push up the switch (RES+) to start driving.
- If you push the smart cruise control switch (RES+ or SET-) while Auto Hold and smart cruise control is operating the Auto Hold will be released regardless of accelerator pedal operation and the vehicle will start to move. The AUTO HOLD indicator changes from green to white. (if equipped with EPB (Electronic Parking Brake))

Detecting Sensor (front view camera/front radar)

Front view camera

Front view camera is a sensor for detecting lanes and the front vehicles.

If the sensor is covered with dirt, snow or other foreign matter, the sensor's detection performance will be degraded and SCC system will be temporarily cancelled so that it does not properly work.

Always keep the area in front of the sensor clean.

For more information of front view camera, refer to "Lane Keeping Assist (LKA)"

Front radar

Front radar detects the distance to the vehicle ahead.

If the sensor or sensor cover is covered with dirt, snow or other foreign matter, the sensor's detection performance will be degraded and SCC system will be temporarily cancelled so that it does not properly work.

Always keep the area in front of the sensor clean.

Warning message

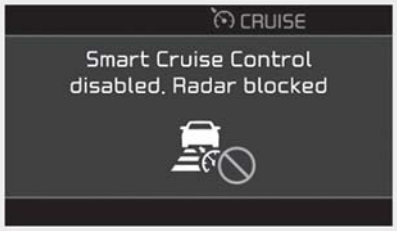

OJF058404L

When the sensor lens cover is blocked with dirt, snow, or debris, Smart Cruise Control system operation may stop temporarily. If this occurs, a warning message will appear on the LCD display. Remove any dirt, snow, or debris and clean the radar sensor lens cover before operating Smart Cruise Control system. Smart Cruise Control system may not properly activate, if the radar is totally contaminated, or if any substance is detected after turning ON the engine (e.g. in an open terrain).

Smart Cruise Control system malfunction message

OJF058406L

The message will appear when the vehicle to vehicle distance control system is not functioning normally.

Take your vehicle to an authorized Kia dealer and have the system checked.

⚠ CAUTION

- ***Do not install accessories around the sensor and do not replace the bumper by yourself. It may interfere with the sensor performance.***
- ***Always keep the sensor and bumper clean.***
- ***Use only a soft cloth to wash the vehicle. Do not spray pressurized water directly on the sensor or sensor cover.***
- ***Be careful not to apply unnecessary force on the radar sensor or sensor cover. If the sensor is forcibly moved out of proper alignment, Smart Cruise Control system may not operate correctly. In this case, a warning message may not be displayed.***

  Have the system checked by an authorized Kia dealer.

(Continued)

(Continued)

- *Do not damage the sensor or sensor area by a strong impact. If the sensor moves slightly off position, Smart Cruise Control system will not operate correctly without any warning or indicator from the cluster.*

  If this occurs, have your vehicle checked by an authorized Kia dealer as soon as possible.
- *Use only a genuine Kia sensor cover for your vehicle. Do not paint anything on the sensor cover.*
- *If the front bumper becomes damaged in the area around the radar sensor, Smart Cruise Control system may not operate properly.*

(Continued)

(Continued)

- *To prevent sensor cover damage from occurring, wash the car with a soft cloth.*
- *Do not tint the window or install stickers, accessories around the inside mirror where the camera is installed.*
- *Make sure the frontal camera installation point does not get wet.*
- *Do not place reflective objects(white paper or mirror etc.) on the crash pad. FCA system may activate unnecessarily due to reflect of the sunlight.*
- *Do not impact or arbitrarily remove any front view camera components.*

To convert to cruise control mode:

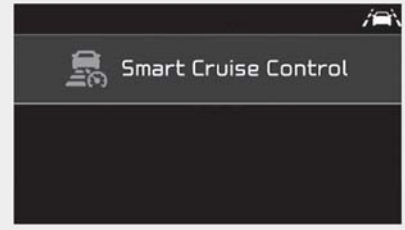

OJF058400L

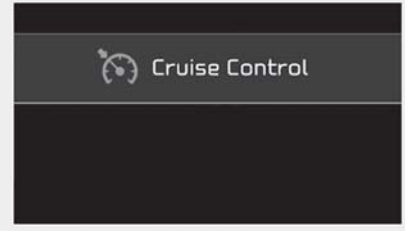

OJF058399L

The driver may choose to only use the cruise control mode (speed control function) by doing as follows:

1. Turn Smart Cruise Control system on (the cruise indicator light will be on but the system will not be activated).
2. Push the distance to distance switch for more than 2 seconds.
3. Choose between "Smart Cruise Control" and "Cruise Control".

When the system is canceled using the CRUISE button or the CRUISE button is used after the engine is turned on, the Smart Cruise Control mode will turn on.

⚠ WARNING

When using the cruise control mode, you must manually adjust the distance to other vehicles as the system will not automatically brake to slow down for other vehicles.

Limitations of the system

Smart Cruise Control system may have limits to its ability to detect distance to the vehicle ahead due to road and traffic conditions.

On curves

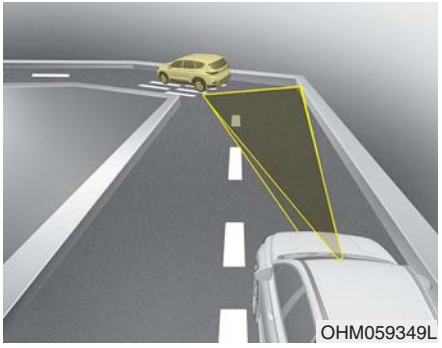

- On curves, Smart Cruise Control system may not detect a moving vehicle in your lane, and then your vehicle could accelerate to the set speed. Also, the vehicle speed will rapidly down when the vehicle ahead is recognized suddenly.
- Select the appropriate set speed on curves and adjust your vehicle speed by depressing the accelerator or brake pedal according to the road condition ahead and driving condition.

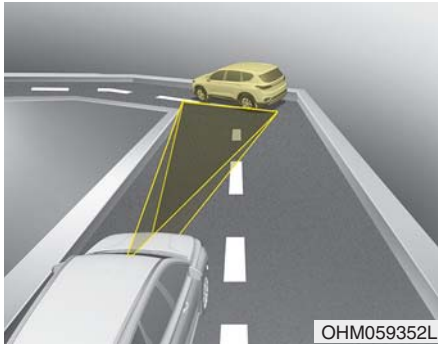

- Your vehicle speed can be reduced due to a vehicle in the adjacent lane. Adjust your vehicle speed by depressing the brake pedal according to the road condition ahead and driving condition. Apply the accelerator pedal and select the appropriate set speed. Check to be sure that the road conditions permit safe operation of the smart cruise control.

On inclines

- During uphill or downhill driving, Smart Cruise Control system may not detect a moving vehicle in your lane, and cause your vehicle to accelerate to the set speed. Also, the vehicle speed will rapidly down when the vehicle ahead is recognized suddenly.
- Select the appropriate set speed on inclines and adjust your vehicle speed by depressing the accelerator or brake pedal according to the road condition ahead and driving condition.

Lane changing

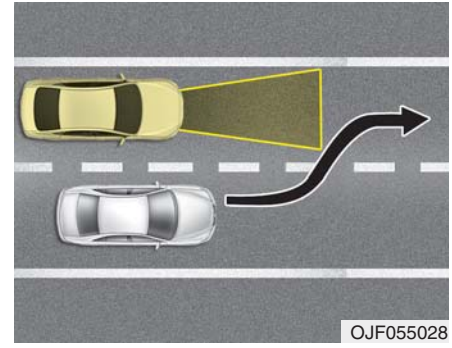

- A vehicle which moves into your lane from an adjacent lane cannot be recognized by the sensor until it is in the sensor's detection range.
- The sensor may not detect immediately when a vehicle cuts in suddenly. Always pay attention to the traffic, road and driving conditions.
- If a vehicle which moves into your lane is slower than your vehicle, your speed may decrease to maintain the distance to the vehicle ahead.

- If a vehicle which moves into your lane is faster than your vehicle, your vehicle will accelerate to the selected speed.

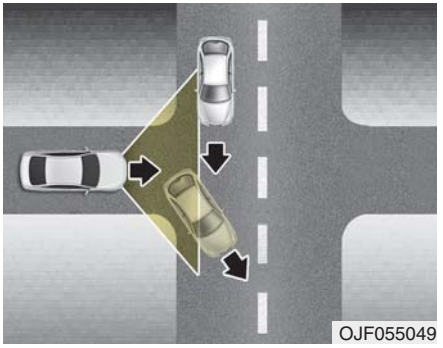

- Your vehicle may accelerate when a vehicle ahead of you disappears.
- When you are warned that the vehicle ahead of you is not detected, drive with caution.

Vehicle recognition

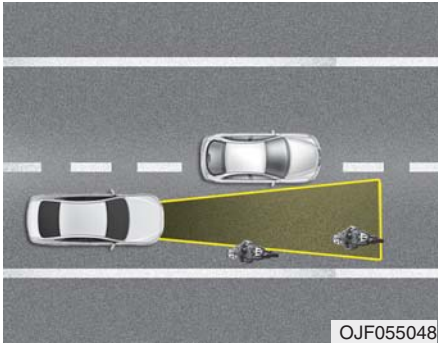

Some vehicles ahead in your lane cannot be recognized by the sensor as follows:

- Narrow vehicles such as motorcycles or bicycles
- Vehicles offset to one side
- Slow-moving vehicles or sudden-decelerating vehicles
- Stopped vehicles
- Vehicles with small rear profiles such as trailers with no loads

A vehicle ahead cannot be recognized correctly by the sensor if any of following occurs:

- When the vehicle is pointing upwards due to overloading in the liftgate (tailgate)
- While making turns by steering
- When driving to one side of the lane
- When driving on narrow lanes or on curves

Adjust your vehicle speed by depressing the brake pedal according to the road condition ahead and driving condition.

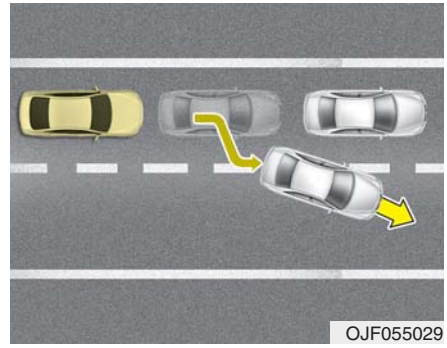

- When vehicles are at a standstill and the vehicle in front of you changes to the next lane, be careful when your vehicle starts to move because it may not recognize the stopped vehicle in front of you. In this case, you must maintain a safe braking distance, and if necessary, depress the brake pedal to reduce your driving speed in order to maintain a safe distance.

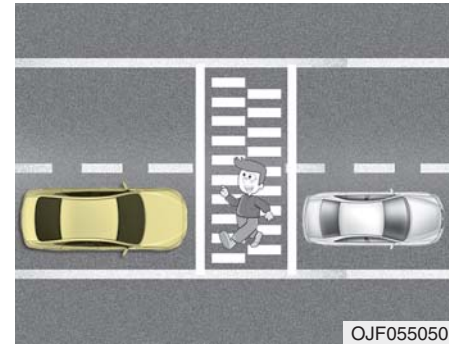

- Always look out for pedestrians when your vehicle is maintaining a distance with the vehicle ahead.

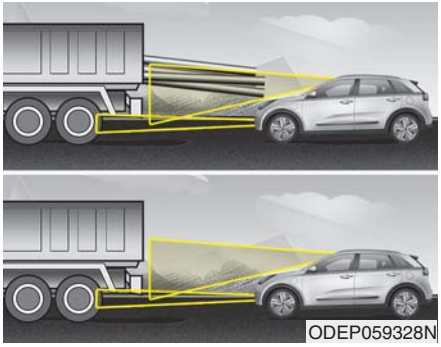

- Always be cautious for vehicles with higher height or vehicles carrying loads that sticks out to the back of the vehicle.

⚠ WARNING

- **Smart Cruise Control system cannot guarantee stopping for every emergency situation.**

  If an emergency stop is necessary, you must apply the brakes.
- **Keep a safe distance according to road conditions and vehicle speed. If the vehicle to vehicle distance is too close during high-speed driving, a serious collision may result.**
- **Smart Cruise Control system cannot recognize a stopped vehicle, pedestrians or an oncoming vehicle. Always look ahead cautiously to react to unexpected and sudden situations.**
- **SCC system may have difficulty in maintaining the correct distance or speed, if the vehicle is driving on a steep incline or towing a trailer.**

(Continued)

(Continued)

- **When other vehicles are changing lanes in front of you frequently, Smart Cruise Control system may not operate appropriately. Always look ahead cautiously to react to unexpected and sudden situations.**
- **Smart Cruise Control system is not a substitute for safe driving practices but a convenience function only. It is the responsibility of the driver to always check the speed and the distance to the vehicle ahead.**
- **Always be aware of the selected speed and vehicle to vehicle distance.**
- **Always maintain sufficient braking distance and decelerate your vehicle by applying the brakes if necessary.**

(Continued)

(Continued)

- **As Smart Cruise Control system may not recognize complex driving situations, always pay attention to driving conditions and control your vehicle speed.**
- **For safe operation, carefully read and follow the instructions in this manual before use.**
- **If another warning sound, such as the fasten seat belt warning, is played, the SCC system warning sound may not occur.**
- **When driving with SCC set, the system may not detect parked vehicles ahead. Be careful if this occurs and do not rely solely on SCC function.**
- **Please turn off SCC system when the vehicle is being towed.**

(Continued)

(Continued)

- **If the vehicle ahead is no longer detected while you are driving with the set distance, the vehicle may accelerate until it reached the set speed. If this occurs, be cautious and control your vehicle speed if needed.**
- **Be cautious and be careful of dangerous situations when driving on a slippery road.**
- **Beware of dangerous situations as you may quickly pass the vehicle driving in the next lane.**

⚠ CAUTION

Smart Cruise Control system may not operate temporarily due to electrical interference.

LANE FOLLOWING ASSIST (LFA) (IF EQUIPPED)

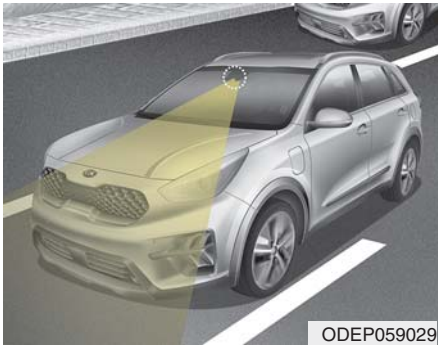

Lane Following Assist system is designed to center the vehicle in the chosen lane by using a front mounted camera on top of the windshield.

It can only become active in combination with Smart Cruise Control and therefore assists the driver in his task to control the lateral movement of the vehicle.

* LFA stands for Lane Following Assist.

⚠ WARNING

- **It is the driver's responsibility to operate the steering wheel for safe driving.**
- **Do not turn the steering wheel hastily if LFA is operating.**
- **LFA system assists the steering wheel control so that the vehicle can stay in the center of the lane. LFA system does not automatically control the steering wheel at all times, which means the driver must keep hands on the wheel at all times while driving.**
- **When using LFA system, always be aware of surroundings and road conditions that may interrupt or stop LFA system.**

⚠ CAUTION

- ***Do not attach glass tinting, stickers, accessories to the windshield where the front camera near the indoor mirror is placed.***
- ***The removal or re-assembly of the front camera to attach tinting, stickers, accessories may require LFA system to be thoroughly inspected and modified. In such case, have your vehicle inspected by an authorized Kia dealer.***
- ***Inspection or modification may be required when replacing parts related to the windshield or front camera, steering. we recommend that the system be checked by an authorized Kia dealer.***

(Continued)

(Continued)

- *Depending on your surroundings and road conditions, LFA system could fail to recognize the lane and stop working. In turn, extra caution is required while driving with LFA system on.*
- *Be sure to check the non-operating conditions and cautions for the driver before using LFA system.*
- *Do not place reflective materials such as white paper or mirror on the crash pad. Sunlight reflections can cause a malfunction in LFA system.*
- *Too big sound from the sound system can interrupt the alarming sound from LFA system.*

(Continued)

(Continued)

- *Keeping your hands off the wheel while driving will trigger the hands-off warning and deactivate the steering-assist system. Put your hands back on the wheel, then the steering-assist system will be reactivated.*
- *When driving at a high speed, the steering assist force can become weak and the vehicle can drive out of its lane. Extra caution is required, and comply with the speed limit.*
- *Attaching an object to the steering wheel could deter steering assistance.*
- *Attaching an object to the steering wheel could deter the hands-off alarming system.*

LFA system operation

To use Lane Following Assist two steps are necessary:

(1) LFA system has to be enabled, and

(2) SCC system has to be activated

With the ignition switch or ENGINE START/STOP button in the [ON], select or release the setting from “User setting → Driver Assistance → Driving Assist → Lane Following Assist”.

Select LFA system in the user setting of the instrument panel.

The LFA system status is remembered by the system and therefore does not need to be enabled again for each new journey.

ODE056025

1. Press the CRUISE button, to turn the system on. The CRUISE indicator in the instrument cluster will illuminate.
2. Accelerate to the desired speed.

   The smart cruise control speed can be set as follows:

   - 10 km/h (5 mph) ~ 160 km/h (100 mph): when there is no vehicle in front
   - 0 km/h (0 mph) ~ 160 km/h (100 mph): when there is a vehicle in front

ODE056024

3. Move the switch down (to SET-), and release it at the desired speed. The set speed and vehicle to vehicle distance on the LCD screen will illuminate.
4. Release the accelerator pedal. The desired speed will automatically be maintained.

Once the system starts working, the indicator light (⊛) comes on the instrument panel.

The indicator light colors according to the system status are as follows.

Green: Active

White: Standby

For more SCC settings and details refer to “Smart Cruise Control (SCC)” in this chapter.

LFA system activation

If the vehicle is inside the lane with both lanes recognized by the system, and there is no steep steering made by the driver, LFA system changes into steering assist mode. The indicator light will come on green, and the system helps the vehicle stay in line by controlling the steering wheel.

When the steering wheel is not controlled temporarily, the indicator light will flash green and changes to white.

When the both lanes are not recognized by the system, the system controls the steering wheel limitedly whether there is a vehicle in front or not.

⚠ WARNING

LFA system ensures the vehicle stays in its lane. LFA system does not guarantee 100% safety. Make sure you always check road conditions and drive safely at all times.

Never completely rely on your LFA system.

Warning

OJF058416L

If you keep your hands off the wheel while driving with LFA system assisting the steering, the hands-off warning will be triggered.

If the driver keeps hands off the wheel even with the hands-off warning on, the steering assist is temporarily released automatically.

If you put your hands back on the wheel with LFA system released, the steering assist will re-start.

⚠ **CAUTION**

- ***Hands-off warnings may be delayed depending on road conditions. Always keep your hands on the steering wheel while driving.***
- ***Hold the steering wheel tight. Otherwise, LFA system could misjudge that the driver hands off the wheel, and a hands-off warning may occur.***

LFA system malfunction

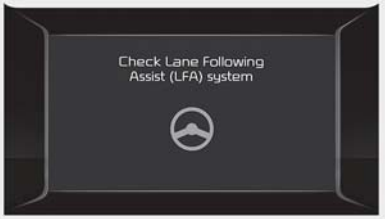

ODEP059265L

The warning message popped up (turned off after a certain period of time)means a problem with LFA system. If this occurs, we recommend that the system be checked by an authorized Kia dealer.

⚠ **CAUTION**

- ***It is the driver's responsibility to operate the steering wheel while driving.***
- ***With LFA system on, the driver can steer the vehicle by operating the wheel on his own.***
- ***We recommend that the driver turns off LFA system and operates the steering wheel by himself in the following cases***
  - ***bad weather***
  - ***bad road conditions***
  - ***when frequent operation of the steering wheel is required***
  - ***when towing other vehicle or trailers***
- ***The steering wheel can feel heavy or light if LFA system is assisting the steering.***

Limitation of the system

- If the driver turns on the turn signal light or the emergency warning light to change the lane
  - Operate the turn signal light switch before changing the lane
  - If you change the lane without operating the turn signal lights, steering reaction force of the wheel may occur.
- Once LFA system is turned on or the lane is changed, the vehicle should be in the center of the road to switch to the steering assist mode. If the driver keeps driving along the lane, LFA system will not assist the steering.
- When the ESC or VSM is activated, the system does not assist steering.
- When driving on a curved road at a high speed, steering assist mode may not work.
- When driving at a speed faster than 110 mph (180 km/h), steering assist mode may not work.
- When sudden steering is made, the system could be temporarily deactivated.
- If you change the lane in a hurry, the system does not assist the steering.
- If the vehicle suddenly stops, it does not assist the steering.
- If the lane is too narrow or too wide, steering is not assisted.
- If the system is not able to recognize a vehicle in front and either of the lanes is not recognized, the steering is not assisted
- If the radius is too small for the curve

▶ ***Cautions for the driver***

If the lane recognition is difficult or limited for the LFA system as shown below, the driver may need to be careful because it may not operate or may cause unnecessary operation.

- **Roads or lane markings in bad condition**
  - When The lane is tainted or invisible
  - When the driver cannot see the lane due to rain, snow, dust, sand, oil, puddles, etc
  - When roads are set or the colors of the lane and road are not distinctive
  - If there is a sign other than the lane near the lane or a mark similar to the lane
  - When the lane is not clear or damaged
  - If the road is covered in the shadows of objects around the road, such as medians, guard rails, noise walls, and trees

- If the number of lanes increases or decreases, or if the lanes intersect with each other more intensely (tollgate entry section, road section/joining section, etc.)
- When there are two or more lane markings such as a construction section, a designated lane, etc.
- When the lane is crowded such as the construction section or the lane is replaced by some structures
- If there is a road marking such as a zigzag lane, crosswalk mark, or road surface milestone
- When a lane suddenly becomes invisible or disappears from an intersection

• The external environment affecting the system

- If the outside brightness of the vehicle suddenly changes, such as when entering or exiting the tunnel or passing under the bridge
- If the vehicle's headlights are not used at night or in the tunnel, or the brightness of the headlights is too weak
- If there are boundary structures such as tollgate booths and sidewalk blocks
- If it is difficult to distinguish lanes due to the reflection on the wet road made by sunlight, streetlight, and oncoming traffic.
- When the backlight is strongly reflected in the direction of the vehicle
- When Driving to the left or right lane by bus lane or on the bus lane
- If there is no enough distance between the front car or if the lane is covered by the car ahead of me
- When the lane change is large, such as a steep curve or a continuous curve
- When passing through speed bump, sudden up/down or left/right slope
- If the vehicle is severely shaken
- When the temperature around the mirror is very high due to direct sunlight

• When the front camera has poor visibility

- If the windshield of the vehicle and the camera lens are covered with dust, fingerprints, or tinting.
- If the camera has poor visibility due to bad weather such as fog, heavy rain, heavy snow.
- If moisture is not completely removed from the windscreen.
- When placing objects on the dashboard, etc.

REAR CROSS-TRAFFIC COLLISION WARNING (RCCW) (IF EQUIPPED)

System description

Rear Cross-Traffic Collision Warning system

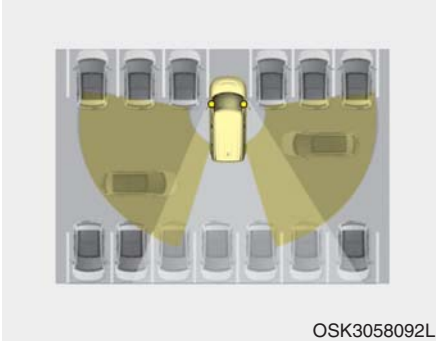

Rear Cross-Traffic Collision Warning system uses radar sensors to monitor the approaching cross traffic from the left and right side of the vehicle when your vehicle is in reverse.

The blind spot detection range varies relative to the approaching vehicle speed.

⚠ WARNING

- **Always be aware of road conditions while driving and be alert for unexpected situations even though RCCW system is operating.**
- **RCCW system is supplemental systems to assist you. Do not entirely rely on the systems. Always pay attention, while driving, for your safety.**
- **RCCW system is not substitutes for proper and safe driving. Always drive safely and use caution when backing up the vehicle.**

System setting and activation

System setting

- The driver can activate the systems by placing the START/STOP button to the ON position and by selecting ‘User Settings → Driver Assistance → Parking Safety → Rear Cross-Traffic Safety’. The RCCW turn on and get activated.
- When the vehicle is turned off then on again, the systems always get ready to be activated.
- When the system is initially turned on and when the vehicle is turned off then on again, the warning light will illuminate for 3 seconds on the outside rearview mirror.

Warning Timing

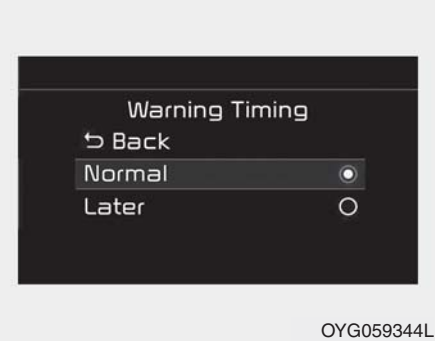

OYG059344L

The driver can select the initial warning activation time in the Cluster by selecting “User Settings → Driver Assistance → Warning Timing”. The options for the initial Rear Cross-Traffic Collision Warning includes the following:

- Normal:

When this condition is selected, the initial RCCW is activated normally. If this setting feels too sensitive change the option to ‘Later’.

The warning activation time may feel late if the side/rear vehicle abruptly accelerates.

- Later:

Select this warning activation time when the traffic is light and you are driving in a low speed. However, if you change the warning activation time, the warning activation time of vehicle's other system may also change. Check the warning activation time before changing it.

Operating conditions

The system will activate when vehicle speed is below 10 km/h (7 mph) and with the shift lever in R (Reverse).

* The system will not activate when the vehicle speed exceeds 10 km/h (7 mph). The system will activate again when the speed is below 8 km/h (5 mph).

The system's detecting range is approximately 0.5 ~ 20 m (0 ~ 82 ft.) An approaching vehicle will be detected if their vehicle speed is within 8 km/h ~ 36 km/h (5 ~ 22.5 mph)

Note that the detecting range may vary under certain conditions. As always, use caution and pay close attention to your surroundings when backing up your vehicle.

Warning message and system control

Rear Cross-Traffic Collision Warning system

OSK3058093L

OSK3058094L

If the vehicle detected by the sensors approaches from the rear left/right side of your vehicle, the warning chime will sound, the warning light on the outside rearview mirror will blink and a message will appear on the LCD display. If the rear view monitor system is in activation, a message will also appear on the 'Infortainment System'.

The warning will stop when:

- The vehicle moving at the rear left/right side of your vehicle is not in the detection range.
- The vehicle is right behind your vehicle.
- The vehicle is not driving towards your vehicle.
- The vehicle's approaching speed is decreased.

⚠ CAUTION

- ***When the operation condition of RCCW is met, the warning will occur every time a vehicle approaches the side or rear of your stopped (0 km/h (0 mph) vehicle speed) vehicle.***
- ***The system's warning or brake may not operate properly if the left or right of your vehicle's rear bumper is blocked by a vehicle or obstacle.***
- ***The driver should always use extreme caution while operating the vehicle, whether or not the warning light on the outer side view mirror illuminates or there is a warning alarm.***
- ***Playing the vehicle audio system at high volume may prevent occupants from hearing the system's warning sounds.***
- ***If any other warning sound such as seat belt warning chime is already generated, the RCCW warning may not sound.***

⚠ WARNING

- **Drive safely even though the vehicle is equipped with Rear Cross-Traffic Collision Warning system. Do not solely rely on the system but check your surrounding when backing the vehicle up.**
- **The driver is responsible for accurate brake control.**
- **Always pay extreme caution while driving. Rear Cross-Traffic Collision Warning system may not operate properly or unnecessarily operate depending on traffic and driving conditions.**

Detecting Sensor

The rear radars are located inside the rear bumper for detecting the side and rear areas.

Always keep the rear bumper clean for proper operation of the system.

⚠ CAUTION

- ***The system may not work properly when the bumper has been damaged, or if the rear bumper has been replaced or repaired.***
- ***The system may turn off due to strong electromagnetic waves.***
- ***Always keep the sensors clean.***
- ***NEVER arbitrarily disassemble the sensor component nor apply any impact on the sensor component.***
- ***Be careful not to apply unnecessary force on the radar sensor or sensor cover. If the sensor is forcibly moved out of proper alignment, the system may not operate correctly. In this case, a warning message may not be displayed.***

(Continued)

(Continued)

Take your vehicle to an authorized Kia dealer and have the system checked.

- ***Do not apply foreign objects such as a bumper sticker or a bumper guard near the radar sensor or apply paint to the sensor area. Doing so may adversely affect the performance of the sensor.***

OJF058433L

Blind-Spot Collision Warning (BCW) system disabled. Radar blocked

- This warning message may appear when:
  - One or both of the sensors on the rear bumper is blocked by dirt or snow or a foreign object.
  - Driving in rural areas where the sensor does not detect another vehicle for an extended period of time.
  - When there is inclement weather such as heavy snow or rain.

A trailer or carrier is installed. (To use BCW system, remove the trailer or carrier from your vehicle.)

If any of these conditions occur, the light on BCW button and the system will turn off automatically.

If any of these conditions occur, the light on the BCW button and the system will turn off automatically.

When BCW canceled warning message is displayed in the cluster, check to make sure that the rear bumper is free from any dirt or snow in the areas where the sensor is located. Remove any dirt, snow, or foreign material that could interfere with the radar sensors.

After any dirt or debris is removed, BCW system should operate normally after about 10 minutes of driving the vehicle.

If the system does not work normally even though the foreign substance, trailer or carrier, or other equipment is removed, have the system checked by an authorized Kia dealer.

■ Type A

OJF058434L

■ Type B

OJF058435L

If there is a problem with BCW system, a warning message will appear and the light on the switch will turn off. The system will turn off automatically.

In this case, have the system checked by an authorized Kia dealer.

Non-operating condition

Outside rearview mirror may not alert the driver when:

- The outside rearview mirror housing is damaged or covered with debris.
- The window is covered with debris.
- The windows are severely tinted.
- The mirror is covered with dirt, snow, or debris.

Limitations of the system

The driver must be cautious in the below situations, because the system may not detect other vehicles or objects in certain circumstances.

- When a trailer or carrier is installed.
- The vehicle drives in inclement weather such as heavy rain or snow.
- The sensor is polluted with rain, snow, mud, etc.
- The rear bumper where the sensor is located is covered with a foreign object such as a bumper sticker, a bumper guard, a bike rack, etc.
- The rear bumper is damaged, or the sensor is out of the original default position.
- The vehicle height gets lower or higher due to heavy loading in a liftgate, abnormal tire pressure, etc.
- When the temperature of the rear bumper is high.
- When the sensors are blocked by other vehicles, walls or parking-lot pillars.
- The vehicle drives on a curved road.
- The road pavement (or the peripheral ground) abnormally contains metallic components (i.e. possibly due to subway construction).
- There is a fixed object near the vehicle, such as a guardrail.
- While going down or up a steep road where the height of the lane is different.
- Driving on a narrow road where trees or grass or overgrown.
- Driving in rural areas where the sensor does not detect another vehicle for an extended period of time.
- Driving on a wet road.
- Driving on a road where the guardrail or wall is in double structure.
- A big vehicle is near such as a bus or truck.
- When the other vehicle approaches very close.
- When the other vehicle passes at a very fast speed.
- While changing lanes.
- If the vehicle has started at the same time as the vehicle next to you and has accelerated.
- When the vehicle in the next lane moves two lanes away from you OR when the vehicle two lanes away moves to the next lane from you.
- A motorcycle or bicycle is near.
- A flat trailer is near.
- If there are small objects in the detecting area such as a shopping cart or a baby stroller.
- If there is a low height vehicle such as a sports car.
- The brake pedal is depressed.
- ESC (Electronic Stability Control) is activated.
- ESC (Electronic Stability Control) malfunctions.
- The tire pressure is low or a tire is damaged.

- The brake is reworked.
- The vehicle sharply stops.
- Temperature is extremely low around the vehicle.
- The vehicle severely vibrates while driving over a bumpy road, uneven/bumpy road, or concrete patch.
- The vehicle drives on a slippery surface due to snow, water puddle, or ice.

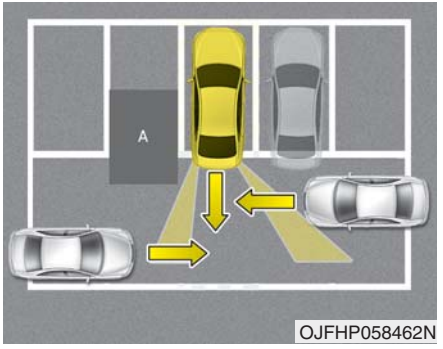

[A] : Structure

- Driving where there is a vehicle or structure near

The system may not operate properly when driving where there is a vehicle or structure near.

In certain instances, the system may not detect the vehicle approaching from behind and the warning or brake may not operate properly.

Always pay attention to your surrounding while driving.

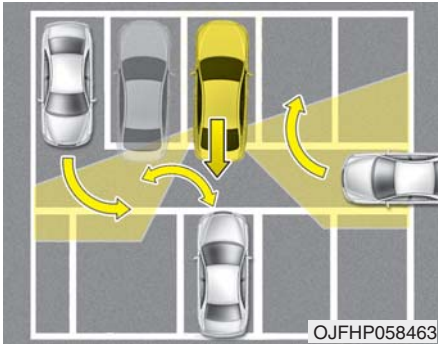

- When the vehicle is in a complex parking environment

The system may not operate properly when the vehicle is in a complex parking environment.

In certain instances, the system may not be able to exactly determine the risk of collision for the vehicles which are parking or pulling out near your vehicle (e.g. a vehicle escaping beside your vehicle, a vehicle parking or pulling out in the rear area, a vehicle approaching your vehicle making a turn, etc.).

In this case, the warning or brake may not operate properly.

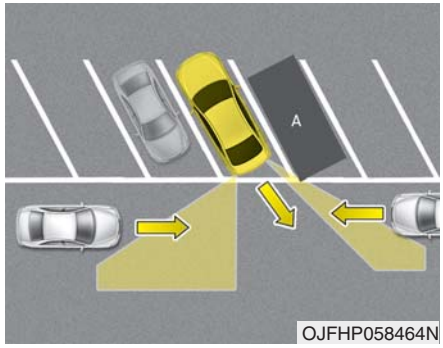

[A] : Vehicle

- When the vehicle is parked diagonally

The system may not operate properly when the vehicle is parked diagonally.

In certain instances, when the diagonally parked vehicle is pulled out of the parking space, the system may not detect the vehicle approaching from the rear left/right of your vehicle. In this case, the warning or brake may not operate properly.

Always pay attention to your surrounding while driving.

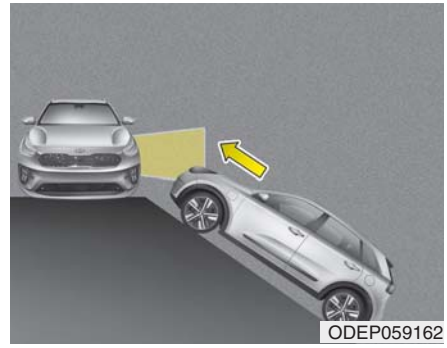

- When the vehicle is on/near a slope

The system may not operate properly when the vehicle is on/near a slope.

In certain instances, the system may not detect the vehicle approaching from the rear left/right and the warning or brake may not operate properly.

Always pay attention to your surrounding while driving.

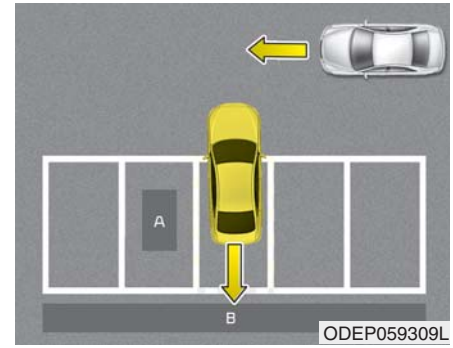

[A] : Structure, [B] : Wall

- Pulling into the parking space where there is a structure

The system may not operate properly when pulling in the vehicle to the parking space where there is a structure at the back or side of your vehicle.

In certain instances, when backing into the parking space, the system may not detect the vehicle moving in front of your vehicle. In this case, the warning or brake may not operate properly.

Always pay attention to the parking space while driving.

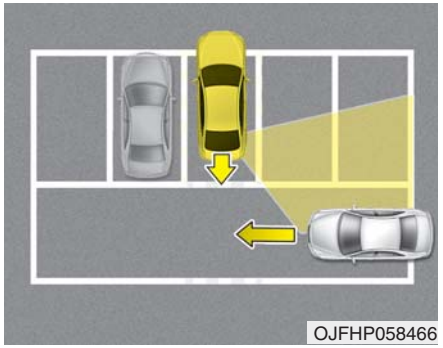

- When the vehicle is parked rearward

If the vehicle is parked rearward and the sensor detects the another vehicle in the rear area of the parking space, the system can warn or control braking. Always pay attention to the parking space while driving.

ECONOMICAL OPERATION

Your vehicle's fuel economy depends mainly on your style of driving, where you drive and when you drive.

Each of these factors affects how many kilometers (miles) you can get from a liter (gallon) of fuel. To operate your vehicle as economically as possible, use the following driving suggestions to help save money in both fuel and repairs:

- Drive smoothly. Accelerate at a moderate rate. Don't make "jack-rabbit" starts or full-throttle shifts and maintain a steady cruising speed. Don't race between stop-lights. Try to adjust your speed to the traffic so you don't have to change speeds unnecessarily.
- Avoid heavy traffic whenever possible. Always maintain a safe distance from other vehicles so you can avoid unnecessary braking. This also reduces brake wear.
- Drive at a moderate speed. The faster you drive, the more fuel your vehicle uses. Driving at a moderate speed, especially on the highway, is one of the most effective ways to reduce fuel consumption.
- Don't "ride" the brake pedal. This can increase fuel consumption and also increase wear on these components. In addition, driving with your foot resting on the brake pedal may cause the brakes to overheat, which reduces their effectiveness and may lead to more serious consequences.
- Take care of your tires. Keep them inflated to the recommended pressure. Incorrect inflation, either too much or too little, results in unnecessary tire wear. Check the tire pressures at least once a month.
- Be sure that the wheels are aligned correctly. Improper alignment can result from hitting curbs or driving too fast over irregular surfaces. Poor alignment causes faster tire wear and may also result in other problems as well as greater fuel consumption.
- Keep your vehicle in good condition. For better fuel economy and reduced maintenance costs, maintain your vehicle in accordance with the maintenance schedule in chapter 8. If you drive your vehicle in severe conditions, more frequent maintenance is required (see chapter 8 for details).
- Keep your vehicle clean. For maximum service, your vehicle should be kept clean and free of corrosive materials. It is especially important that mud, dirt, ice, etc. not be allowed to accumulate on the underside of the vehicle. This extra weight can result in increased fuel consumption and also contribute to corrosion.
- Travel lightly. Don't carry unnecessary weight in your vehicle. Weight reduces fuel economy.
- Don't let the engine idle longer than necessary. If you are waiting (and not in traffic), turn off your engine and restart only when you're ready to go.

- Remember, your vehicle does not require extended warm-up. After the engine has started, allow the engine to run for 10 to 20 seconds prior to placing the vehicle in gear. In very cold weather, however, give your engine a slightly longer warm-up period.
- Don't "lug" or "over-rev" the engine. Lugging is driving too slowly in a very high gear resulting in engine bucking. If this happens, shift to a lower gear. Over-revving is racing the engine beyond its safe limit. This can be avoided by shifting at the recommended speed.
- Use your air conditioning sparingly. The air conditioning system is operated by engine power so your fuel economy is reduced when you use it.
- Opening windows at high speeds can reduce fuel economy.
- Fuel economy is less in crosswinds and headwinds. To help offset some of this loss, slow down when driving in these conditions.

Keeping a vehicle in good operating condition is important both for economy and safety. Therefore, have an authorized Kia dealer perform scheduled inspections and maintenance.

⚠ WARNING - Engine off during motion

Never turn the engine off to coast down hills or anytime the vehicle is in motion. The power steering and power brakes will not function properly without the engine running.

In addition, turning off the engine start/stop button while driving could engage the steering wheel lock, resulting in loss of vehicle steering. Keep the engine on and downshift to an appropriate gear for an engine braking effect.

SPECIAL DRIVING CONDITIONS

Hazardous driving conditions

When hazardous driving conditions are encountered such as water, snow, ice, mud, sand, or similar hazards, follow these suggestions:

- Drive cautiously and allow extra distance for braking.
- Avoid sudden braking or steering.
- When braking with non-ABS brakes pump the brake pedal with a light up-and-down motion until the vehicle is stopped.

Do not pump the brake pedal on a vehicle equipped with ABS.

- If stalled in snow, mud, or sand, use the second gear. Accelerate slowly to avoid spinning the drive wheels.
- Use sand, rock salt, or other non-slip material under the drive wheels to provide traction when stalled in ice, snow, or mud.

⚠ WARNING - Downshifting

Do not downshift with a dual clutch transmission while driving on slippery surfaces. The sudden change in tire speed could cause the tires to skid and result in an accident.

Reducing the risk of a rollover

This multi-purpose passenger vehicle is defined as a Sports Utility Vehicle (SUV). Utility vehicles have a significantly higher rollover rate than other types of vehicles. SUV's have higher ground clearance and a narrower track to make them capable of performing in a wide variety of off-road applications. Specific design characteristics give them a higher center of gravity than ordinary vehicles. An advantage of the higher ground clearance is a better view of the road, which allows you to anticipate problems. They are not designed for cornering at the same speeds as conventional passenger vehicles, any more than low-slung sports vehicles are designed to perform satisfactorily in off-road conditions. Due to this risk, driver and passengers are strongly recommended to buckle their seat belts. In a rollover crash, an unbelted person is significantly more likely to die than a person wearing a seat belt. There are steps that a driver can make to reduce the risk of a rollover.

If at all possible, avoid sharp turns or abrupt maneuvers, do not load your roof rack with heavy cargo, and never modify your vehicle in any way.

⚠ WARNING - Rollover

As with other Sports Utility Vehicles (SUV), failure to operate this vehicle correctly may result in loss of control, an accident or vehicle rollover.

- **Utility vehicles have a significantly higher rollover rate than other types of vehicles.**
- **Specific design characteristics (higher ground clearance, narrower track, etc.) give this vehicle a higher center of gravity than ordinary vehicles.**
- **A SUV is not designed for cornering at the same speeds as conventional vehicles.**
- **Avoid sharp turns or abrupt maneuvers.**

(Continued)

(Continued)

- **In a rollover crash, an unbelted person is significantly more likely to die than a person wearing a seat belt. Make sure everyone in the vehicle is properly buckled up.**

⚠ WARNING

Your vehicle is equipped with tires designed to provide safe ride and handling capability. Do not use a size and type of tire and wheel that is different from the one that is originally installed on your vehicle. It can affect the safety and performance of your vehicle, which could lead to steering failure or rollover and serious injury. When replacing the tires, be sure to equip all four tires with the tire and wheel of the same size, type, tread, brand and load-carrying capacity. If you nevertheless decide to equip your vehicle with any tire/wheel combination not recommended by Kia for off road driving, you should not use these tires for highway driving.

Rocking the vehicle

If it is necessary to rock the vehicle to free it from snow, sand, or mud, first turn the steering wheel right and left to clear the area around your front wheels. Then, shift back and forth between R (Reverse) and any forward gear in vehicles equipped with a dual clutch transmission. Do not race the engine, and spin the wheels as little as possible. If you are still stuck after a few tries, have the vehicle pulled out by a tow vehicle to avoid engine overheating and possible damage to the transaxle.

⚠ WARNING - Sudden Vehicle Movement

Do not attempt to rock the vehicle if people or objects are nearby. The vehicle may suddenly move forward or backwards as it becomes unstuck.

⚠ CAUTION - Vehicle rocking

Prolonged rocking may cause engine overheating, transaxle damage or failure, and tire damage.

⚠ CAUTION - Spinning tires

Do not spin the wheels, especially at speeds more than 56 km/h (35 mph). Spinning the wheels at high speeds when the vehicle is stationary could cause a tire to overheat which could result in tire damage that may injure bystanders.

The ESC system should be turned OFF prior to rocking the vehicle.

Smooth cornering

Avoid braking or gear changing in corners, especially when roads are wet. Ideally, corners should always be taken under gentle acceleration. If you follow these suggestions, tire wear will be held to a minimum.

Driving at night

Because night driving presents more hazards than driving in the daylight, here are some important tips to remember:

- Slow down and keep more distance between you and other vehicles, as it may be more difficult to see at night, especially in areas where there may not be any street lights.
- Adjust your mirrors to reduce the glare from other driver's headlights.
- Keep your headlights clean and properly aimed. (On vehicles not equipped with the automatic headlight aiming feature.) Dirty or improperly aimed headlights will make it much more difficult to see at night.
- Avoid staring directly at the headlights of oncoming vehicles. You could be temporarily blinded, and it will take several seconds for your eyes to readjust to the darkness.

Driving in the rain

Rain and wet roads can make driving dangerous, especially if you’re not prepared for the slick pavement. Here are a few things to consider when driving in the rain:

- A heavy rainfall will make it harder to see and will increase the distance needed to stop your vehicle, so slow down.
- Keep your windshield wiping equipment in good shape. Replace your windshield wiper blades when they show signs of streaking or missing areas on the windshield.
- If your tires are not in good condition, making a quick stop on wet pavement can cause a skid and possibly lead to an accident. Be sure your tires are in good shape.
- Turn on your headlights to make it easier for others to see you.
- Driving too fast through large puddles can affect your brakes. If you must go through puddles, try to drive through them slowly.
- If you believe you may have gotten your brakes wet, apply them lightly while driving until normal braking operation returns.

Driving in flooded areas

Avoid driving through flooded areas unless you are sure the water is no higher than the bottom of the wheel hub. Drive through any water slowly. Allow adequate stopping distance because brake performance may be affected.

After driving through water, dry the brakes by gently applying them several times while the vehicle is moving slowly.

Driving off-road

Drive carefully off-road because your vehicle may be damaged by rocks or roots of trees. Become familiar with the off-road conditions where you are going to drive before you begin driving.

Highway driving

Tires

Adjust the tire inflation pressures to specification. Low tire inflation pressures will result in overheating and possible failure of the tires.

Avoid using worn or damaged tires which may result in reduced traction or tire failure.

Never exceed the maximum tire inflation pressure shown on the tires.

⚠ WARNING - Under/over inflated tires

Always check the tires for proper inflation before driving. Underinflated or overinflated tires can cause poor handling, loss of vehicle control, and sudden tire failure leading to accidents, injuries, and even death. For proper tire pressures, refer to “Tires and wheels” in chapter 9.

⚠ WARNING - Tire tread

Always check the tire tread before driving your vehicle. Worn-out tires can result in loss of vehicle control. Worn-out tires should be replaced as soon as possible. For further information and tread limits, refer to "Tires and wheels" in chapter 8.

Fuel, engine coolant and engine oil

High speed travel consumes more fuel than urban motoring. Do not forget to check both the engine coolant and engine oil.

Drive belt

A loose or damaged drive belt may result in overheating of the engine.

WINTER DRIVING

Severe weather conditions in the winter result in greater wear and other problems. To minimize the problems of winter driving, you should follow these suggestions:

Snowy or icy conditions

To drive your vehicle in deep snow, it may be necessary to use snow tires on your tires. If snow tires are needed, it is necessary to select tires equivalent in size and type of the original equipment tires. Failure to do so may adversely affect the safety and handling of your vehicle. Furthermore, speeding, rapid acceleration, sudden brake applications, and sharp turns are potentially very hazardous practices.

During deceleration, use engine braking to the fullest extent. Sudden brake applications on snowy or icy roads may cause skids to occur. You need to keep sufficient distance between the vehicle in operation in front of your vehicle. Also, apply the brake gently.

Snow tires

If you mount snow tires on your vehicle, make sure they are radial tires of the same size and load range as the original tires. Mount snow tires on all four wheels to balance your vehicle's handling in all weather conditions. Keep in mind that the traction provided by snow tires on dry roads may not be as high as your vehicle's original equipment tires. You should drive cautiously even when the roads are clear. Check with the tire dealer for maximum speed recommendations.

Do not install studded tires without first checking local, state and municipal regulations for possible restrictions against their use.

⚠ WARNING - Snow tire size

Snow tires should be equivalent in size and type to the vehicle's standard tires. Otherwise, the safety and handling of your vehicle may be adversely affected.

Use high quality ethylene glycol coolant

Your vehicle is delivered with high quality ethylene glycol coolant in the cooling system. It is the only type of coolant that should be used because it helps prevent corrosion in the cooling system, lubricates the water pump and prevents freezing. Be sure to replace or replenish your coolant in accordance with the maintenance schedule in chapter 8. Before winter, have your coolant tested to assure that its freezing point is sufficient for the temperatures anticipated during the winter.

Check battery and cables

Winter puts additional burdens on the battery system. Visually inspect the battery and cables as described in chapter 8. The level of charge in your battery can be checked by an authorized Kia dealer or a service station.

Change to "winter weight" oil if necessary

In some climates it is recommended that a lower viscosity "winter weight" oil be used during cold weather. See chapter 9 for recommendations. If you aren't sure what weight oil you should use, consult an authorized Kia dealer.

Check spark plugs and ignition system

Inspect your spark plugs as described in chapter 8 and replace them if necessary. Also check all ignition wiring and components to be sure they are not cracked, worn or damaged in any way.

To keep locks from freezing

To keep the locks from freezing, squirt an approved de-icer fluid or glycerine into the key opening. If a lock is covered with ice, squirt it with an approved de-icing fluid to remove the ice. If the lock is frozen internally, you may be able to thaw it out by using a heated key. Handle the heated key with care to avoid injury.

Use approved window washer anti-freeze in system

To keep the water in the window washer system from freezing, add an approved window washer anti-freeze solution in accordance with instructions on the container. Window washer anti-freeze is available from an authorized Kia dealer and most auto parts outlets. Do not use engine coolant or other types of anti-freeze as these may damage the paint finish.

Don’t let your parking brake freeze

Under some conditions your parking brake can freeze in the engaged position. This is most likely to happen when there is an accumulation of snow or ice around or near the rear brakes or if the brakes are wet. If there is a risk the parking brake may freeze, apply it only temporarily while you put the gear shift lever in P (Park, Dual clutch transmission) and block the rear wheels so the vehicle cannot roll. Then release the parking brake.

Don't let ice and snow accumulate underneath

Under some conditions, snow and ice can build up under the fenders and interfere with the steering. When driving in severe winter conditions where this may happen, you should periodically check underneath the vehicle to be sure the movement of the front wheels and the steering components are not obstructed.

Carry emergency equipment

Depending on the severity of the weather, you should carry appropriate emergency equipment. Some of the items you may want to carry include tow straps or chains, flashlight, emergency flares, sand, shovel, jumper cables, window scraper, gloves, ground cloth, coveralls, blanket, etc.

TRAILER TOWING

We do not recommend using this vehicle for trailer towing.

VEHICLE LOAD LIMIT

Tire and loading information label

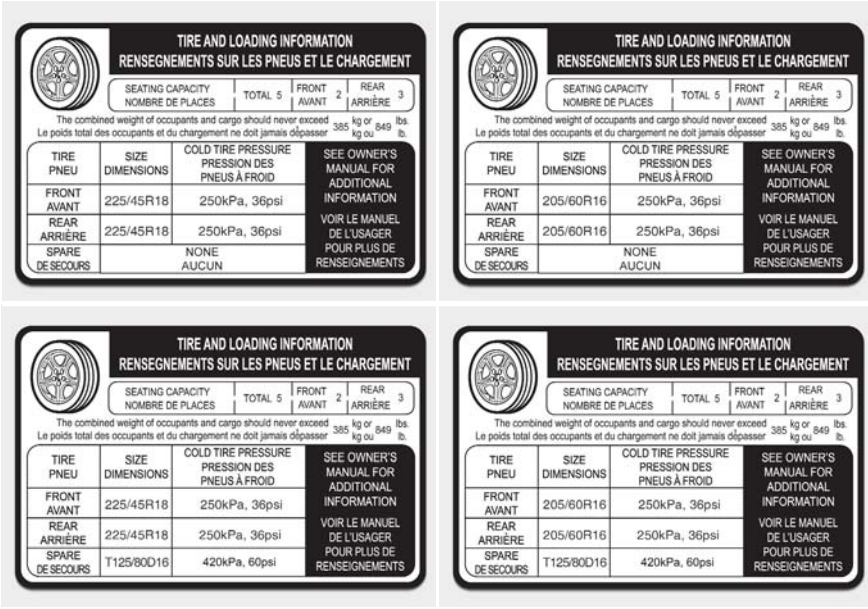

ODE067042N/ODE067043N/ODE067055N/ODE067056N

The label located on the driver's door sill gives the original tire size, cold tire pressures recommended for your vehicle, the number of people that can be in your vehicle and vehicle capacity weight.

Vehicle capacity weight:

385 kg (849 lbs.)

Vehicle capacity weight is the maximum combined weight of occupants and cargo. If your vehicle is equipped with a trailer, the combined weight includes the tongue load.

Seating capacity:

Total : 5 persons
(Front seat : 2 persons,
Rear seat : 3 persons)

Seating capacity is the maximum number of occupants including a driver, your vehicle may carry.

However, the seating capacity may be reduced based upon the weight of all of the occupants, and the weight of the cargo being carried or towed.

Do not overload the vehicle as there is a limit to the total weight, or load limit including occupants and cargo, the vehicle can carry.

Towing capacity:

We do not recommend using this vehicle for trailer towing.

Cargo capacity:

The cargo capacity of your vehicle will increase or decrease depending on the weight and the number of occupants.

Steps for Determining Correct Load Limit -

(1) Locate the statement "The combined weight of occupants and cargo should never exceed XXX kg or XXX lbs." on your vehicle's placard.

(2) Determine the combined weight of the driver and passengers that will be riding in your vehicle.

(3) Subtract the combined weight of the driver and passengers from XXX kg or XXX lbs.

(4) The resulting figure equals the available amount of cargo and luggage load capacity. For example, if the "XXX" amount equals 635 kg (1400 lbs.) and there will be five 68 kg (150 lbs.) passengers in your vehicle, the amount of available cargo and luggage load capacity is 295 kg (650 lbs).

(635-340 (5 x 68) = 295 kg or 1400-750 (5 x 150) = 650 lbs.)

(5) Determine the combined weight of luggage and cargo being loaded on the vehicle. That weight may not safely exceed the available cargo and luggage load capacity calculated in Step 4.

(6) If your vehicle will be towing a trailer, load from your trailer will be transferred to your vehicle. Consult this manual to determine how this reduces the available cargo and luggage load capacity of your vehicle.

⚠ WARNING - Loose cargo

Do not travel with unsecured objects in the passenger compartment of your vehicle (e.g. suit cases or unsecured child seats). These items may strike occupants during a sudden stop or crash.

Example 1

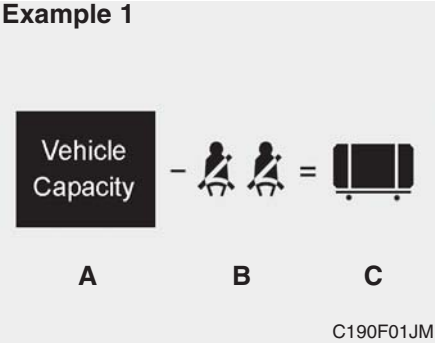

Item	Description	Total
A	Vehicle Capacity Weight	385 kg (849 lbs)
B	Subtract Occupant Weight 68 kg (150 lbs) × 2	136 kg (300 lbs)
C	Available Cargo and Luggage weight	249 kg (549 lbs)

Example 2

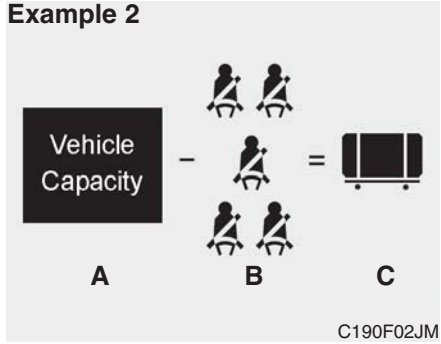

Item	Description	Total
A	Vehicle Capacity Weight	385 kg (849 lbs)
B	Subtract Occupant Weight 68 kg (150 lbs) × 5	340 kg (750 lbs)
C	Available Cargo and Luggage weight	45 kg (99 lbs)

Example 3

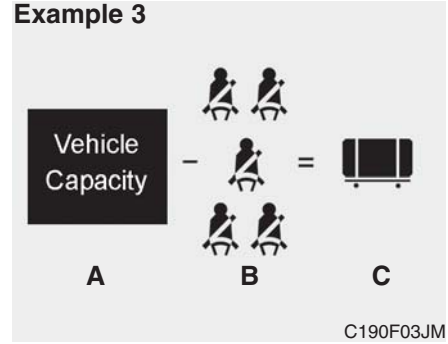

Item	Description	Total
A	Vehicle Capacity Weight	385 kg (849 lbs)
B	Subtract Occupant Weight 73 kg (161 lbs) × 5	365 kg (805 lbs)
C	Available Cargo and Luggage weight	20 kg (44 lbs)

Refer to your vehicle’s tire and loading information label for specific information about your vehicle's capacity weight and seating positions. The combined weight of the driver, passengers and cargo should never exceed your vehicle's capacity weight.

Certification label

The certification label is located on the driver's door sill at the center pillar.

This label shows the maximum allowable weight of the fully loaded vehicle. This is called the GVWR (Gross Vehicle Weight Rating). The GVWR includes the weight of the vehicle, all occupants, fuel and cargo.

This label also tells you the maximum weight that can be supported by the front and rear axles, called Gross Axle Weight Rating (GAWR).

To find out the actual loads on your front and rear axles, you need to go to a weigh station and weigh your vehicle. Your dealer can help you with this. Be sure to spread out your load equally on both sides of the centerline.

⚠ WARNING - Over loading

Never exceed the GVWR for your vehicle, the GAWR for either the front or rear axle and vehicle capacity weight. Exceeding these ratings can affect your vehicle's handling and braking ability.

The label will help you decide how much cargo and installed equipment your vehicle can carry.

If you carry items inside your vehicle - like suitcases, tools, packages, or anything else - they are moving as fast as the vehicle. If you have to stop or turn quickly, or if there is a crash, the items will keep going and can cause an injury if they strike the driver or a passenger.

⚠ WARNING - Over loading

Do not overload your vehicle. Overloading your vehicle can cause heat buildup in your vehicle's tires and possible tire failure, increased stopping distances and poor vehicle handling--all of which may result in a crash.

✻ NOTICE

Overloading your vehicle may cause damage. Repairs would not be covered by your warranty. Do not overload your vehicle.

VEHICLE WEIGHT

This chapter will guide you in the proper loading of your vehicle and/or trailer, to keep your loaded vehicle weight within its design rating capability, with or without a trailer. Properly loading your vehicle will provide maximum return of the vehicle design performance. Before loading your vehicle, familiarize yourself with the following terms for determining your vehicle's weight ratings, with or without a trailer, from the vehicle's specifications and the compliance label:

Base curb weight

This is the weight of the vehicle including a full tank of fuel and all standard equipment. It does not include passengers, cargo, or optional equipment.

Vehicle curb weight

This is the weight of your new vehicle when you picked it up from your dealer plus any aftermarket equipment.

Cargo weight

This figure includes all weight added to the Base Curb Weight, including cargo and optional equipment.

GAW (Gross axle weight)

This is the total weight placed on each axle (front and rear) - including vehicle curb weight and all payload.

GAWR (Gross axle weight rating)

This is the maximum allowable weight that can be carried by a single axle (front or rear). These numbers are shown on the compliance label. The total load on each axle must never exceed its GAWR.

GVW (Gross vehicle weight)

This is the Base Curb Weight plus actual Cargo Weight plus passengers.

GVWR (Gross vehicle weight rating)

This is the maximum allowable weight of the fully loaded vehicle (including all options, equipment, passengers and cargo). The GVWR is shown on the certification label located on the driver’s door sill.

What to do in an emergency

Road warning 6-2
- Hazard warning flasher 6-2

In case of an emergency while driving. 6-3
- If the engine stalls at a crossroad or crossing. 6-3
- If you have a flat tire while driving. 6-3
- If the engine stalls while driving 6-3

If the engine will not start 6-4
- If engine doesn't turn over or turns over slowly 6-4
- If engine turns over normally but does not start 6-4

Emergency starting 6-5
- Before Jump Starting (For Hybrid) 6-5
- Method to disconnect the (-) cable for regular maintenance (For Hybrid) 6-7
- Jump starting. 6-8
- Push-starting 6-10

If the engine overheats. 6-11

Tire Pressure Monitoring System (TPMS) 6-13
- Check tire pressure 6-13
- Low tire pressure telltale 6-15
- Low tire pressure position telltale 6-15
- Changing a tire with TPMS 6-17

If you have a flat tire (with spare tire). 6-19
- Jack and tools 6-19
- Removing and storing the spare tire 6-20
- Changing tires 6-20

If you have a flat tire (with Tire Mobility Kit) . . 6-28
- Introduction 6-29
- Notes on the safe use of the Tire Mobility Kit 6-30
- Components of the Tire Mobility Kit 6-32
- Using the Tire Mobility Kit 6-33
- Distributing the sealant. 6-35
- Checking the tire inflation pressure 6-36
- Technical Data 6-38

Towing 6-39
- Towing service 6-39
- Removable towing hook 6-40
- Emergency towing. 6-41

If An Accident Occurs 6-44

ROAD WARNING

Hazard warning flasher

The hazard warning flasher serves as a warning to other drivers to exercise extreme caution when approaching, overtaking, or passing your vehicle.

It should be used whenever emergency repairs are being made or when the vehicle is stopped near the edge of a roadway.

Depress the flasher switch with the ignition switch in any position. The flasher switch is located in the center facia panel. All turn signal lights will flash simultaneously.

- The hazard warning flasher operates whether your vehicle is running or not.
- The turn signals do not work when the hazard flasher is on.
- Care must be taken when using the hazard warning flasher while the vehicle is being towed.

IN CASE OF AN EMERGENCY WHILE DRIVING

If the engine stalls at a crossroad or crossing

If the engine stalls at a crossroad or crossing, set the shift lever in the N (Neutral) position and then push the vehicle to a safe place.

If you have a flat tire while driving

If a tire goes flat while you are driving:

1. Take your foot off the accelerator pedal and let the vehicle slow down while driving straight ahead. Do not apply the brakes immediately or attempt to pull off the road as this may cause a loss of control. When the vehicle has slowed to such a speed that it is safe to do so, brake carefully and pull off the road. Drive off the road as far as possible and park on firm level ground. If you are on a divided highway, do not park in the median area between the two traffic lanes.
2. When the vehicle is stopped, turn on your emergency hazard flashers, set the parking brake and put the transmission in P (Park).
3. Have all passengers get out of the vehicle. Be sure they all get out on the side of the vehicle that is away from traffic.
4. When changing a flat tire, follow the instruction provided later in this section.

If the engine stalls while driving

1. Reduce your speed gradually, keeping a straight line. Move cautiously off the road to a safe place.
2. Turn on your emergency flashers.
3. Try to start the hybrid system again. If your vehicle will not start, contact an authorized Kia dealer or seek other qualified assistance.

✻ NOTICE

If there was a check engine light and loss of power or stall and if safe to do so, wait at least 10 seconds to restart the vehicle after it stalls. This may reset the car so it will no longer run at low power (limp home) condition.

IF THE ENGINE WILL NOT START

If engine doesn't turn over or turns over slowly

1. Be sure the shift lever is in N (Neutral) or P (Park) and the emergency brake is set.
2. Check the battery connections to be sure they are clean and tight.
3. Turn on the interior light. If the light dims or goes out when you operate the starter, the battery is discharged.
4. Check the starter connections to be sure they are securely tightened.
5. Do not push or pull the vehicle to start it. See instructions for "Jump starting".

⚠ WARNING - Push/pull start

Do not push or pull the vehicle to start it. Push or pull starting may cause the catalytic converter to overload and create a fire hazard.

If engine turns over normally but does not start

1. Check the fuel level.
2. With the ignition switch in the LOCK position, check all connectors at the ignition coils and spark plugs. Reconnect any that may be disconnected or loose.
3. Check the fuel line in the engine compartment.
4. If the engine still does not start, call an authorized Kia dealer or seek other qualified assistance.

EMERGENCY STARTING

Before Jump Starting (For Hybrid)

Over discharge of 12V battery

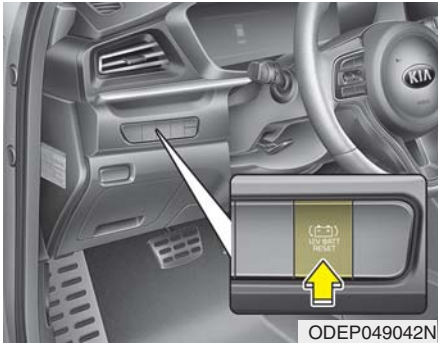

ODEP049042N

- Press the reconnection ("12V Batt Reset") switch (1) :

This car has a reconnection switch which can reset the over discharged 12V battery and enable getting the car started without jump-start.

- Press the "12V Batt Reset" switch (1) located on the lower left dash.
- Immediately start car by stepping on the brake pedal and pressing the Start switch within few seconds.
- To charge 12V battery, keep driving or idling the car more than 30 minutes.

If you do not start the vehicle immediately after pressing the "12V Batt Reset" switch (1), the power of 12V battery is automatically disconnected after few seconds to save the 12V battery from additional discharge. If the 12V battery is disconnected prior to starting the vehicle, press "12V Batt Reset" switch (1) again and then immediately start the car as explained above.

Repeated use of the "12V Batt Reset" switch (1) without a sufficient engine ON cycle (30 Min+) may cause over discharge of the 12V battery, which will prevent car starting. If the 12V battery is over discharged to a point that the reset does not work, try to jump-start the vehicle. (refer to jump-starting)

After starting the vehicle (HEV Ready), the 12V battery is being charged whether the engine is running or not. Although there is no engine-sound, it is not necessary to step on the accelerator pedal.

Once the 12V battery is fully discharged and reconnected, the 12V battery is initialized.

The following items should be reset after the battery has been discharged or the battery has been disconnected.

- Auto up/down window
- Sunroof
- Trip computer
- Climate control system
- Driver position Memory System
- Audio

As explained above, if the vehicle cannot be started after pressing the “12V Batt Reset” switch (1) due to over discharge, try to jump-start (refer to Jump-starting).

Charging method for 12V battery

(A) It is recommended to charge the 12V battery by starting and running the vehicle (HEV Ready Mode) for a minimum of 30 minutes if a 12V reset, or jump start has been used.

(B) If you cannot start the vehicle :

- After connecting the jumper cables at the recommended locations, you should press “12V batt Reset” switch (1) to charge the battery.
- The voltage range of the charger should be 13.3~14V and its current range should be less than 60A. (13.8V is recommended).

⚠ CAUTION

- ***The use of an improper charger with a voltage and current range higher than specified may cause overheating and damage to the 12V battery.***
- ***The use of an incorrect charger will lead to a power shut-off to save the 12V battery. Stop using the incorrect charger once the power of the vehicle is shut off.***

External power source using 12V battery
(Except the use of dash cameras)

The use of external power accessories may reduce performance and function of the vehicle. Especially, the use of dash cameras may cause a shut off the power of the vehicle prior to the dash camera's automatic shut-down.

If the power of the car is shut off, start the vehicle as explained above (refer to "Over discharge of 12V battery").

Method to disconnect the (-) cable for regular maintenance (For Hybrid)

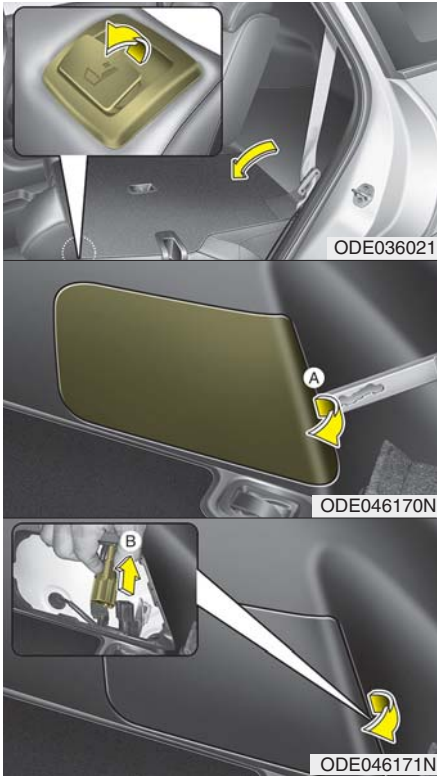

When the vehicle is under regular maintenance, make sure to separate the (-) cable inside the luggage room before maintenance.

Procedures to separate the (-) cable is as below :

- Fold the rear left side seat.
- Using the key or (-) screwdriver, remove the service cover (A) on the luggage trim.
- Separate the (-) cable (B).

  Reassemble in the reverse order of disassembly.

Jump starting

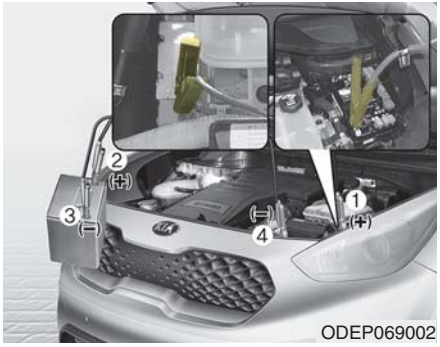

ODEP069002

Connect cables in numerical order and disconnect in reverse order.

Remove the air filter cover before connecting the cable to part (4).

Jump starting can be dangerous if done incorrectly. Therefore, to avoid harm to yourself or damage to your vehicle or battery, follow these jump starting procedures. If in doubt, we strongly recommend that you have a competent technician or towing service jump start your vehicle.

⚠ CAUTION - Push/pull start to 12 Volt Battery

Use only a 12-volt jumper system. You can damage a 12-volt starting motor, ignition system, and other electrical parts beyond repair by use of a 24-volt power supply (either two 12-volt batteries in series or a 24-volt motor generator set).

⚠ CAUTION - For hybrid

Do not jump start another vehicle with your hybrid vehicle. Jump starting another vehicle will damage the hybrid vehicle's 12 volt battery (lithium polymer type).

⚠ WARNING - Battery

Never attempt to check the electrolyte level of the battery as this may cause the battery to rupture or explode.

⚠ WARNING - Frozen batteries

Do not attempt to jump start the vehicle if the discharged battery is frozen as the battery may rupture or explode.

⚠ WARNING - Electrolyte

- **Do not charge or discharge arbitrarily. It may lead to fault, electric shock or burns.**
- **Do not damage the battery in any way, including dropping it, impacting it, or piercing it with a sharp object. It may cause electrolyte leakage or fire.**
- **Breakdown of the unit may lead to electrolyte leakage or flammable gas generation. If this occurs, contact an authorized Kia dealer immediately.**
- **If electrolyte leaks out, avoid contact with eyes, skin or clothes. In event of accident, flush with water and get medical help immediately.**
- **Do not place near open flame or incinerate. It may lead to fire or explosion.**
- **Keep battery out of reach of children or animals.**
- **Keep the battery away from moisture and liquid. Do not touch or use if liquids have been spilled on the battery.**

⚠ WARNING - Battery cables

Do not connect the jumper cable from the negative terminal of the booster battery to the negative terminal of the discharged battery, directly. This can cause the discharged battery to overheat and crack and/or cause degradation.

Connect the jumper cable from the negative terminal of the booster battery to the chassis ground in the engine room.

⚠ WARNING - Sulfuric acid risk

Automobile batteries contain sulfuric acid. When jump starting your vehicle, be careful not to get sulfuric acid on yourself, your clothing, or on the vehicle. This acid is poisonous and highly corrosive.

Jump starting procedure

1. Make sure the booster battery is 12-volt and that its negative terminal is grounded.
2. If the booster battery is in another vehicle, do not allow the vehicles to come in contact.
3. Turn off all unnecessary electrical loads.
4. Connect the jumper cables in the exact sequence shown in the illustration. First connect one end of a jumper cable to the positive terminal of the discharged battery (1), then connect the other end to the positive terminal of the booster battery (2).

   Proceed to connect one end of the other jumper cable to the negative terminal of the booster battery (3), then the other end to a solid, stationary, metallic point (for example, the engine lifting bracket) away from the battery (4). Do not connect it to or near any part that moves when the engine is cranked.

Do not allow the jumper cables to contact anything except the correct battery terminals or the correct ground. Do not lean over the battery when making connections.

5. Start the engine of the vehicle with the booster battery and let it run at 2,000 rpm, then start the engine of the vehicle with the discharged battery.

If the cause of your battery discharging is not apparent, you should have your vehicle checked by an authorized Kia dealer.

Push-starting

Vehicles equipped with dual clutch transmission lock system cannot be push-started.

Follow the directions in this section for jump-starting.

⚠ WARNING - Tow starting vehicle

Never tow a vehicle to start it.

When the engine starts, the vehicle can suddenly surge forward and could cause a collision with the tow vehicle.

IF THE ENGINE OVERHEATS

If your temperature gauge indicates overheating, you will experience a loss of power, or hear loud pinging or knocking, the engine is probably too hot. If this happens, you should:

1. Turn on the emergency warning flasher and stop in a safe place. Move the shift lever to P (Park) and engage the parking brake.
2. If hot steam does not come out from the engine room, carefully open the engine room and check whether the water pump connector is properly engaged. If the connector is not properly engaged, stop the engine immediately and properly engage the connector. Then, turn the engine on.
3. Turn on the air conditioner.
4. If the “HEV Warning” light turns on in the driver instrument cluster, or engine coolant or hot steam emits from the engine coolant filler, stop the engine immediately. Then, call the nearest authorized Kia dealer for assistance. If the “Engine Warning” light remains illuminated or the engine coolant is not flowing out, keep the engine running. Open the engine hood for ventilation to help cool down the engine.

⚠ WARNING - Under the Hood

While the engine is running, keep hair, hands and clothing away from moving parts such as the fan and drive belts to prevent injury.

5. Check whether the engine coolant temperature is low enough by checking its temperature. If the engine coolant level is low, please check the connecting parts between the radiator hose, heater hose, and water pump for any signs of leakage. When there is no sign of leakage, please refill the engine coolant. If causes and signs of engine overheating such as warning light illumination, engine coolant leakage, or cooling fan malfunction are found, stop the vehicle the earliest. Then, call the nearest authorized Kia dealer for assistance.

⚠ WARNING - Radiator Cap

Do not remove the radiator cap when the engine is hot. This can allow coolant to blow out of the opening and cause serious burns.

6. If you cannot find the cause of the overheating, wait until the engine temperature has returned to normal. Then, if coolant has been lost, carefully add coolant to the reservoir to bring the fluid level in the reservoir up to the halfway mark.
7. Proceed with caution, keeping alert for further signs of overheating. If over heating happens again, call the nearest authorized Kia dealer for assistance.

✻ NOTICE

Serious loss of coolant indicates there is a leak in the cooling system and should be checked as soon as possible by an authorized Kia dealer.

⚠ CAUTION

When the engine overheats from low engine coolant, suddenly adding engine coolant may cause cracks in the engine. To prevent damage, add engine coolant slowly in small quantities

TIRE PRESSURE MONITORING SYSTEM (TPMS)

(1) Low tire pressure telltale / TPMS malfunction indicator

(2) Low tire pressure position telltale (Shown on the LCD display)

Check tire pressure

- You can check the tire pressure in the information mode on the cluster.
  - Refer to “Assist mode” in chapter 4.
- Tire pressure is displayed 1~2 minutes later after driving.
- If tire pressure is not displayed when the vehicle is stopped, “Drive to display” message displays. After driving, check the tire pressure.
- You can change the tire pressure unit in the user settings mode on the cluster.
  - psi, kpa, bar (Refer to “User settings mode” in chapter 4).

✻ NOTICE

- **The tire pressure may change due to factors such as parking condition, driving style, and altitude above sea level.**
- **Low tire pressure warning may sound when a tire’s pressure unit is equal or higher than nearby tires. This is a normal occurrence, which is due to the change in tire pressure along with tire temperature.**
- **The tire pressure shown on the dashboard may differ from the tire pressure measured by tire pressure gauge.**

Each tire, including the spare (if provided), should be checked monthly when cold and inflated to the inflation pressure recommended by the vehicle manufacturer on the vehicle placard or tire inflation pressure label. (If your vehicle has tires of a different size than the size indicated on the vehicle placard or tire inflation pressure label, you should determine the proper tire inflation pressure for those tires.)

As an added safety feature, your vehicle has been equipped with a tire pressure monitoring system (TPMS) that illuminates a low tire pressure telltale when one or more of your tires is significantly under-inflated. Accordingly, when the low tire pressure telltale illuminates, you should stop and check your tires as soon as possible, and inflate them to the proper pressure. Driving on a significantly under-inflated tire causes the tire to overheat and can lead to tire failure. Under-inflation also reduces fuel efficiency and tire tread life, and may affect the vehicle's handling and stopping ability.

Please note that the TPMS is not a substitute for proper tire maintenance, and it is the driver's responsibility to maintain correct tire pressure, even if under-inflation has not reached the level to trigger illumination of the TPMS low tire pressure telltale.

Your vehicle has also been equipped with a TPMS malfunction indicator to indicate when the system is not operating properly. The TPMS malfunction indicator is combined with the low tire pressure telltale. When the system detects a malfunction, the telltale will flash for approximately one minute and then remain continuously illuminated. This sequence will continue upon subsequent vehicle start-ups as long as the malfunction exists. When the malfunction indicator is illuminated, the system may not be able to detect or signal low tire pressure as intended. TPMS malfunctions may occur for a variety of reasons, including the installation of replacement or alternate tires or wheels on the vehicle that prevent the TPMS from functioning properly.

Always check the TPMS malfunction telltale after replacing one or more tires or wheels on your vehicle to ensure that the replacement or alternate tires and wheels allow the TPMS to continue to function properly.

✻ NOTICE

If the TPMS, Low Tire Pressure indicator does not illuminate for 3 seconds when the ignition switch is turned to the ON position or engine is running, or if they remain illuminated after coming on for approximately 3 seconds, take your vehicle to your nearest authorized Kia dealer and have the system checked.

Low tire pressure telltale

Low tire pressure position telltale

ODEP069064L

When the tire pressure monitoring system warning indicators are illuminated, one or more of your tires is significantly under-inflated.

If the telltale illuminates, immediately reduce your speed, avoid hard cornering and anticipate increased stopping distances. You should stop and check your tires as soon as possible.

Inflate the tires to the Proper pressure as indicated on the vehicle's placard or tire inflation pressure label located on the driver's side center pillar outer panel. If you cannot reach a service station or if the tire cannot hold the newly added air, replace the low pressure tire with the spare tire.

Then the TPMS malfunction indicator and the Low Tire Pressure telltale may turn on and illuminate after restarting and about 20 minutes of continuous driving before you have the low pressure tire repaired and replaced on the vehicle.

In winter or cold weather, the low tire pressure telltale may be illuminated if the tire pressure was adjusted to the recommended tire inflation pressure in warm weather. It does not mean your TPMS is malfunctioning because the decreased temperature leads to a proportional lowering of tire pressure.

When you drive your vehicle from a warm area to a cold area or from a cold area to a warm area, or the outside temperature is greatly higher or lower, you should check the tire inflation pressure and adjust the tires to the recommended tire inflation pressure.

When filling tires with more air, conditions to turn off the low tire pressure telltale may not be met. This is because a tire inflator has a margin of error in performance. The low tire pressure telltale will be turned off if the tire pressure is above the recommended tire inflation pressure.

⚠ WARNING - Low pressure damage

Do not drive on low pressure tires. Significantly low tire pressure can cause the tires to overheat and fail, making the vehicle unstable resulting in increased braking distances and a loss of vehicle control.

TPMS (Tire Pressure Monitoring System) malfunction indicator

The low tire pressure telltale will illuminate after it blinks for approximately one minute when there is a problem with the Tire Pressure Monitoring System. If the system is able to correctly detect an underinflation warning at the same time as system failure then it will illuminate both the TPMS malfunction and low tire pressure position telltales e.g. if Front Left sensor fails, the TPMS malfunction indicator illuminates, but if the Front Right, Rear Left, or Rear Right tire is under-inflated, the low tire pressure position telltales may illuminate together with the TPMS malfunction indicator.

Have the system checked by an authorized Kia dealer as soon as possible to determine the cause of the problem.

- The TPMS malfunction indicator may be illuminated if the vehicle is moving around electric power supply cables or radios transmitters such as at police stations, government and public offices, broadcasting stations, military installations, airports, or transmitting towers, etc. This can interfere with normal operation of the Tire Pressure Monitoring System (TPMS).
- The TPMS malfunction indicator may be illuminated if snow chains are used or some separate electronic devices such as notebook computer, mobile charger, remote starter or navigation etc., are used in the vehicle. This can interfere with normal operation of the Tire Pressure Monitoring System (TPMS).

Changing a tire with TPMS

If you have a flat tire, the Low Tire Pressure telltale will come on. Have the flat tire repaired by an authorized Kia dealer as soon as possible or replace the flat tire with the spare tire.

⚠ CAUTION - Repair Agents

Never use a puncture-repairing agent not approved by Kia to repair and/or inflate a low pressure tire. The sealant not approved by Kia may damage the tire pressure sensor.

Each wheel is equipped with a tire pressure sensor mounted inside the tire behind the valve stem. You must use TPMS specific wheels. It is recommended that you always have your tires serviced by an authorized Kia dealer.

Even if you replace the low pressure tire with the spare tire, the Low Tire Pressure telltale will remain on until the low pressure tire is repaired and placed on the vehicle.

After you replace the low pressure tire with the spare tire, the TPMS malfunction indicator may illuminate after a few minutes because the TPMS sensor mounted on the spare wheel is not initiated.

Once the low pressure tire is inflated again to the recommended pressure and installed on the vehicle or the TPMS sensor mounted on the replaced spare wheel is initiated by an authorized Kia dealer, the TPMS malfunction indicator and the low tire pressure telltale will turn off within a few minutes of driving.

If the indicator has not disappeared after a few minutes of driving, please visit an authorized Kia dealer.

If an original mounted tire is replaced with the spare tire, the TPMS sensor on the replaced spare wheel should be initiated and the TPMS sensor on the original mounted wheel should be deactivated. If the TPMS sensor on the original mounted wheel located in the spare tire carrier still activates, the tire pressure monitoring system may not operate properly. Have the tire with TPMS serviced or replaced by an authorized Kia dealer.

You may not be able to identify a low tire by simply looking at it. Always use a good quality tire pressure gauge to measure the tire's inflation pressure. Please note that a tire that is hot (from being driven) will have a higher pressure measurement than a tire that is cold (from sitting stationary for at least 3 hours and driven less than 1.6 km (1 mile) during that 3 hour period).

Allow the tire to cool before measuring the inflation pressure. Always be sure the tire is cold before inflating to the recommended pressure.

A cold tire means the vehicle has been sitting for 3 hours and driven for less than 1.6 km (1 mile) in that 3 hour period.

Never use tire sealant if your vehicle is equipped with a Tire Pressure Monitoring System. The liquid sealant can damage the tire pressure sensors.

- The TPMS cannot alert you to severe and sudden tire damage caused by external factors such as nails or road debris.
- If you feel any vehicle instability, immediately take your foot off the accelerator, apply the brakes gradually and with light force, and slowly move to a safe position off the road.

✻ NOTICE - Protecting TPMS

Tampering with, modifying, or disabling the Tire Pressure Monitoring System (TPMS) components may interfere with the system's ability to warn the driver of low tire pressure conditions and/or TPMS malfunctions. Tampering with, modifying, or disabling the Tire Pressure Monitoring System (TPMS) components may void the warranty for that portion of the vehicle.

This device complies with Industry Canada licence-exempt RSS standard(s).

Operation is subject to the following conditions:

1. This device may not cause interference, and
2. This device must accept any interference, including interference that may cause undesired operation of the device.
3. Changes or modifications not expressly approved by the party responsible for compliance could void the user's authority to operate the device.

IF YOU HAVE A FLAT TIRE (WITH SPARE TIRE) (IF EQUIPPED)

Jack and tools

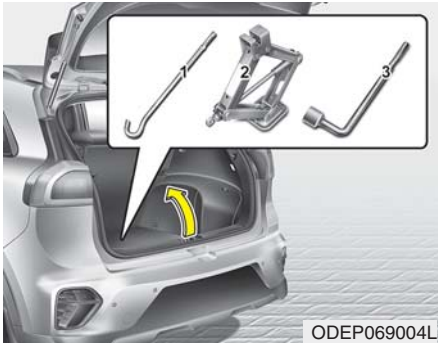

The jack and wheel lug nut wrench are stored in the luggage compartment.

Remove the panel indicated in the illustration.

(1) Jack handle

(2) Jack

(3) Wheel lug nut wrench

Jacking instructions

The jack is provided for emergency tire changing only.

To prevent the jack from “rattling” while the vehicle is in motion, store it properly.

Follow jacking instructions to reduce the possibility of personal injury.

⚠ WARNING - Tire Jack

Do not place any portion of your body under a vehicle that is only supported by a jack since the vehicle can easily roll off the jack. Use vehicle support stands.

⚠ WARNING - Changing tires

Never attempt vehicle repairs in the traffic lanes of a public road or highway.

- Always move the vehicle completely off the road and onto the shoulder before trying to change a tire. The jack should be used on a firm level ground. If you cannot find a firm, level place off the road, call a towing service company for assistance.
- Be sure to use the correct front and rear jacking positions on the vehicle; never use the bumpers or any other part of the vehicle for jack support.
- Do not allow anyone to remain in the vehicle while it is on the jack.
- Make sure any children present are in a secure place away from the road and from the vehicle to be raised with the jack.

⚠ WARNING - Running vehicle on jack

Do not start or run the engine of the vehicle while the vehicle is on the jack as this may cause the vehicle to fall off the jack.

Removing and storing the spare tire

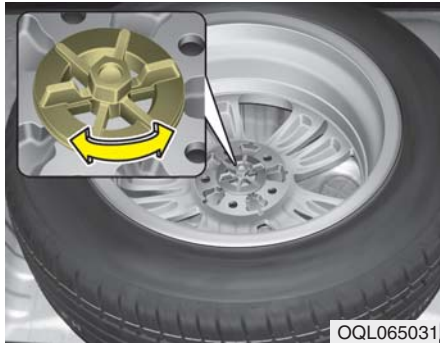

Turn the tire hold-down wing bolt counterclockwise.

Store the tire in the reverse order of removal.

To prevent the spare tire and tools from “rattling” while the vehicle is in motion, store them properly.

If it is hard to loosen the tire hold-down wing bolt by hand, you can loosen it easily using the jack handle.

1. Put the jack handle (1) inside of the tire hold-down wing bolt.
2. Turn the tire hold-down wing bolt counterclockwise with the jack handle.

Use caution when utilizing the sharp jack handle.

Changing tires

1. Park on a level surface and apply the parking brake firmly.
2. Shift the shift lever into P (Park) with dual clutch transmission.
3. Activate the hazard warning flashers.

ODEP069066N

4. Remove the wheel lug nut wrench, jack and spare tire from the vehicle.
5. Block both the front and rear of the wheel that is diagonally opposite from the jack position.

⚠ WARNING - Jack location

To reduce the possibility of injury, be sure to use only the jack provided with the vehicle in the correct jack position; never use any other part of the vehicle for jack support.

⚠ WARNING - Changing a tire

- **To prevent vehicle movement while changing a tire, always set the parking brake fully, and always chock the wheel diagonally opposite the wheel being changed.**
- **We recommend that the wheels of the vehicle be chocked, and that no person remain in a vehicle that is being jacked.**

ODEP069025L

6. Loosen the wheel lug nuts counterclockwise one turn each, but do not remove any nut until the tire has been raised off the ground.

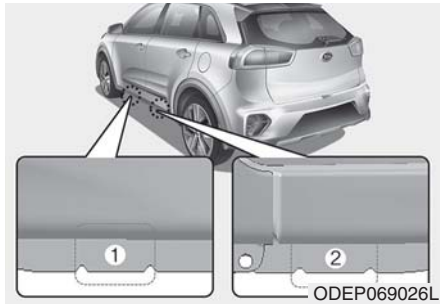

ODEP069026L

ODEP069027L

7. Place the jack at the front (1) or rear (2) jacking position closest to the tire you are changing. Place the jack at the designated locations under the frame. The jacking positions are plates welded to the frame with two tabs and a raised dot to line up with the jack.

ODEP069028L

8. Insert the wheel lug nut wrench into the jack and turn it clockwise, raising the vehicle until the tire just clears the ground. This measurement is approximately 30 mm (1 in.).

   Before removing the wheel lug nuts, make sure the vehicle is stable and that there is no chance for movement or slippage.

9. Loosen the wheel nuts and remove them with your fingers. Slide the wheel off the studs and lay it flat so it cannot roll away. To put the wheel on the hub, pick up the spare tire, line up the holes with the studs and slide the wheel onto them. If this is difficult, tip the wheel slightly and get the top hole in the wheel lined up with the top stud. Jiggle the wheel back and forth until the wheel can slide over the other studs.

Wheels may have sharp edges. Handle them carefully to avoid possible severe injury. Before putting the wheel into place, be sure that there is nothing on the hub or wheel (such as mud, tar, gravel, etc.) that prevents the wheel from fitting solidly against the hub.

⚠ WARNING - Installing a wheel

Make sure the wheel makes good contact with the hub when installed. If the contact of the mounting surface between the wheel and hub is insufficient, the wheel nuts could come loose and cause the loss of a wheel. Loss of a wheel may result in loss of control of the vehicle.

10. To install the wheel, hold it on the studs, put the wheel nuts on the studs and tighten them finger tight. Jiggle the tire to be sure it is completely seated, then tighten the nuts as much as possible with your fingers again.
11. Insert the wrench into the jack and lower the vehicle to the ground by turning the wheel nut wrench counterclockwise.

ODEP069029L

Position the wrench as shown in the drawing and tighten the wheel nuts. Be sure the socket is seated completely over the nut. Do not stand on the wrench handle or use an extension pipe over the wrench handle. Go around the wheel, tightening every nut following the numerical sequence shown in the image until they are all tight. Double-check each nut for tightness. After changing wheels, have an authorized Kia dealer tighten the wheel nuts to their proper torque as soon as possible.

Wheel nut tightening torque:
79~94 lbf·ft
(11~13 kgf·m, 107~127 N·m)

If you have a tire gauge, remove the valve cap and check the air pressure. If the pressure is lower than recommended, drive slowly to the nearest service station and inflate to the correct pressure. If it is too high, adjust it until it is correct. Always reinstall the valve cap after checking or adjusting the tire pressure. If the cap is not replaced, dust and dirt may get into the tire valve and air may leak from the tire. If you lose a valve cap, buy another and install it as soon as possible.

After you have changed the wheels, always secure the flat tire in its place and return the jack and tools to their proper storage locations.

⚠ CAUTION - Reusing lug nuts

Make certain during wheel removal that the same nuts that were removed are reinstalled - or, if replaced, that nuts with metric threads and the same chamfer configuration are used. Your vehicle has metric threads on the wheel studs and nuts. Installation of a non-metric thread nut on a metric stud will not secure the wheel to the hub properly and will damage the stud so that it must be replaced.

Note that most lug nuts do not have metric threads. Be sure to use extreme care in checking for thread style before installing aftermarket lug nuts or wheels. If in doubt, consult an authorized Kia dealer.

⚠ WARNING - Wheel studs

If the studs are damaged, they may lose their ability to retain the wheel. This could lead to the loss of the wheel and a collision resulting in serious injuries.

To prevent the jack, wheel lug nut wrench and spare tire from rattling while the vehicle is in motion, store them properly.

Check the inflation pressures as soon as possible after installing the spare tire. Adjust it to the specified pressure, if necessary. Refer to “Tires and wheels” in chapter 8.

Important - use of compact spare tire

Your vehicle is equipped with a compact spare tire. This compact spare tire takes up less space than a regular-size tire. This tire is smaller than a conventional tire and is designed for temporary use only.

- You should drive carefully when the compact spare is in use. The compact spare should be replaced by the proper conventional tire and rim at the first opportunity.
- The operation of this vehicle is not recommended with more than one compact spare tire in use at the same time.

⚠ WARNING - Spare tire

The compact spare tire is for emergency use only. Do not operate your vehicle on this compact spare at speeds over 80 km/h (50 mph). The original tire should be repaired or replaced as soon as possible to avoid failure of the spare, possibly leading to personal injury or death.

The compact spare should be inflated to 420 kPa (60 psi).

✻ NOTICE

Check the inflation pressure after installing the spare tire. Adjust it to the specified pressure, as necessary.

When using a compact spare tire, observe the following precautions:

- Under no circumstances should you exceed 80 km/h (50 mph); a higher speed could damage the tire.
- Ensure that you drive slowly enough for the road conditions to avoid all hazards. Any road hazard, such as a pothole or debris, could seriously damage the compact spare.
- Any continuous road use of this tire could result in tire failure, loss of vehicle control, and possible personal injury.
- Do not exceed the vehicle's maximum load rating or the load-carrying capacity shown on the sidewall of the compact spare tire.

- Avoid driving over obstacles. The compact spare tire diameter is smaller than the diameter of a conventional tire and reduces the ground clearance approximately 25 mm (1 inch), which could result in damage to the vehicle.
- Do not take this vehicle through an automatic vehicle wash while the compact spare tire is installed.
- Do not use the compact spare tire on any other vehicle because this tire has been designed especially for your vehicle.
- The compact spare tire's tread life is shorter than a regular tire. Inspect your compact spare tire regularly and replace worn compact spare tires with the same size and design, mounted on the same wheel.
- The compact spare tire should not be used on any other wheels, nor should standard tires, snow tires, wheel covers or trim rings be used with the compact spare wheel. If such use is attempted, damage to these items or other vehicle components may occur.
- Do not use more than one compact spare tire at a time.
- Do not tow a trailer while the compact spare tire is installed.

Jack label

■ Example

• Type A

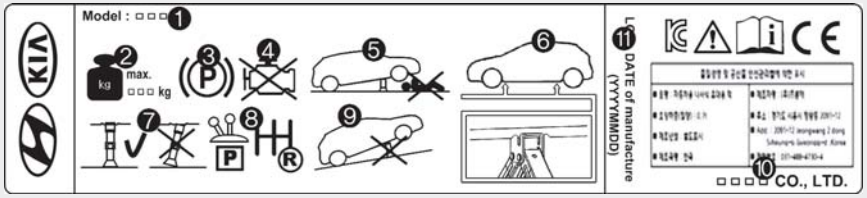

OHYK064001

• Type B

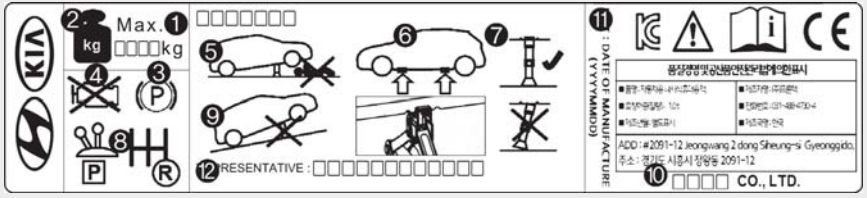

OHYK064005

• Type C

OHYK064002

❊ The actual Jack label in the vehicle may differ from the illustration. For more detailed specifications, refer to the label attached to the jack.

1. Model Name
2. Maximum allowable load
3. When using the jack, set your parking brake.
4. When using the jack, stop the engine.
5. Do not get under a vehicle that is supported by a jack.
6. The designated locations under the frame.
7. When supporting the vehicle, the base plate of jack must be vertical under the lifting point.
8. Move the shift lever to the P position on vehicles with dual clutch transmission.
9. The jack should be used on firm level ground.
10. Jack manufacturer
11. Production date
12. Representative company and address

IF YOU HAVE A FLAT TIRE (WITH TIRE MOBILITY KIT) (IF EQUIPPED)

■ for 18 inch tire

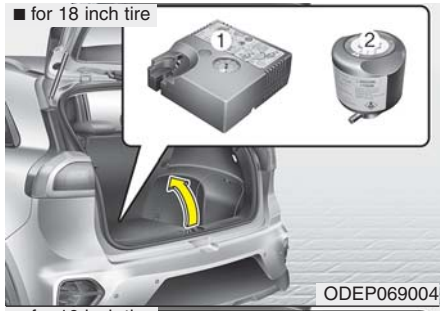

■ for 16 inch tire

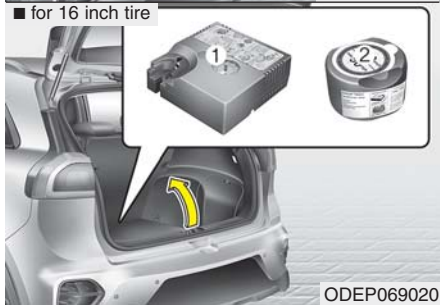

For safe operation, carefully read and follow the instructions in this manual before use.

(1) Compressor

(2) Sealant bottle

The Tire Mobility Kit is a temporary fix to the tire and the tire should be inspected by an authorized Kia dealer as soon as possible.

⚠ CAUTION

When two or more tires are flat, do not use the tire mobility kit because the one supplied canister of sealant in the Tire Mobility Kit is to only enough sealant for one flat tire.

⚠ WARNING - Tire wall

Do not use the Tire Mobility Kit to repair large punctures or damage to the tire sidewalls. In these situations, the tire cannot be sealed completely and air will leak from the tire. This can result in tire failure.

Have your tire repaired as soon as possible. The tire may loose air pressure at any time after inflating with the Tire Mobility Kit.

⚠ WARNING
- Speed with temporary fix

Do not exceed a speed of 80 km/h (50 mph) when driving with a tire sealed with the Tire Mobility Kit.

While driving, if you experience any unusual vibration, ride disturbance, or noise, reduce your speed and drive with caution until you can safely pull off to the side of the road.

Introduction

■ for 18 inch tire

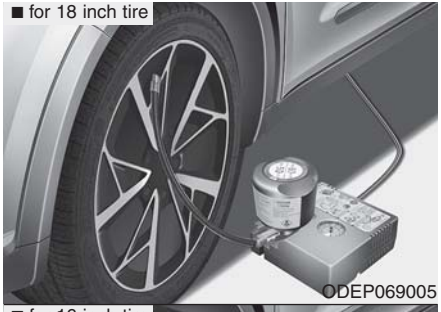

■ for 16 inch tire

With the Tire Mobility Kit you stay mobile even after experiencing a tire puncture.

The system of compressor and sealing compound effectively and comfortably seals most punctures in a passenger car tire caused by nails or similar objects and reinflates the tire.

After you ensured that the tire is properly sealed you can drive cautiously on the tire (up to 200 km (120 miles)) at a max. speed of 80 km/h (50 mph) in order to reach a service station or tire dealer to have the tire replacement.

It is possible that some tires, especially with larger punctures or damage to the sidewall, cannot be sealed completely.

Air pressure loss in the tire may adversely affect tire performance.

For this reason, you should avoid abrupt steering or other driving maneuvers, especially if the vehicle is heavily loaded or if a trailer is in use.

The Tire Mobility Kit is not designed or intended as a permanent tire repair method and is to be used for one tire only.

This instruction shows you step by step procedure to temporarily seal the puncture.

Read the section “Notes on the safe use of the Tire Mobility Kit”.

Notes on the safe use of the Tire Mobility Kit

- Park your car at the side of the road so that you can work with the Tire Mobility Kit away from moving traffic.
- To be sure your vehicle will not move, even when you're on fairly level ground, always set your parking brake.
- Only use the Tire Mobility Kit for sealing/inflation passenger car tires. Only punctured areas located within the tread region of the tire can be sealed using the Tire Mobility Kit.
- Do not use on motorcycles, bicycles or any other type of tires.
- When the tire and wheel are damaged, do not use Tire Mobility Kit for your safety.
- Use of the Tire Mobility Kit may not be effective for tire damage larger than approximately 4 mm (0.16 in.).

  Please contact the nearest Kia dealership if the tire cannot be made roadworthy with the Tire Mobility Kit.
- Do not use the Tire Mobility Kit if a tire is severely damaged by driving run flat or with insufficient air pressure.
- Do not remove any foreign objects such as nails or screws that have penetrated the tire.
- Provided the car is outdoors, leave the engine running. Otherwise operating the compressor may eventually drain the car battery.
- Never leave the Tire Mobility Kit unattended while it is being used.
- Do not leave the compressor running for more than 10 min. at a time or it may overheat.
- Do not use the Tire Mobility Kit if the ambient temperature is below -30°C (22°F).

⚠ CAUTION

When repairing a flat tire with the Tire Mobility Kit (TMK), quickly remove the sealant on the tire pressure sensor and wheel. When installing the repaired tire and wheel, tighten the wheel nut to a torque value of 11 ~ 13 kgf·m.

⚠ WARNING - Sealant

- **Keep out of reach of children.**
- **Avoid contact with eyes.**
- **Do not swallow.**

⚠ WARNING

Do not use the Tire sealant after the sealant has expired (i.e. past the expiration date on the sealant container). This can increase the risk of tire failure.

⚠ WARNING

- **If the sealant gets on your skin, wash it with a large amount of water. If skin irritation continues, seek medical attention.**
- **If the sealant gets into your eyes, raise your eyelid and wash for at least 15 minutes. If eye irritation continues, seek medical attention.**
- **If you have ingested the sealant, wash your mouth and drink a large amount of water. However, do not give anything to an unconscious person and see the doctor immediately.**

  Exposure to the sealant for a long time may cause damage to your body.

✻ NOTICE

The sealant container and insert hose (3) cannot be reused. Purchase an extra after use.

Components of the Tire Mobility Kit

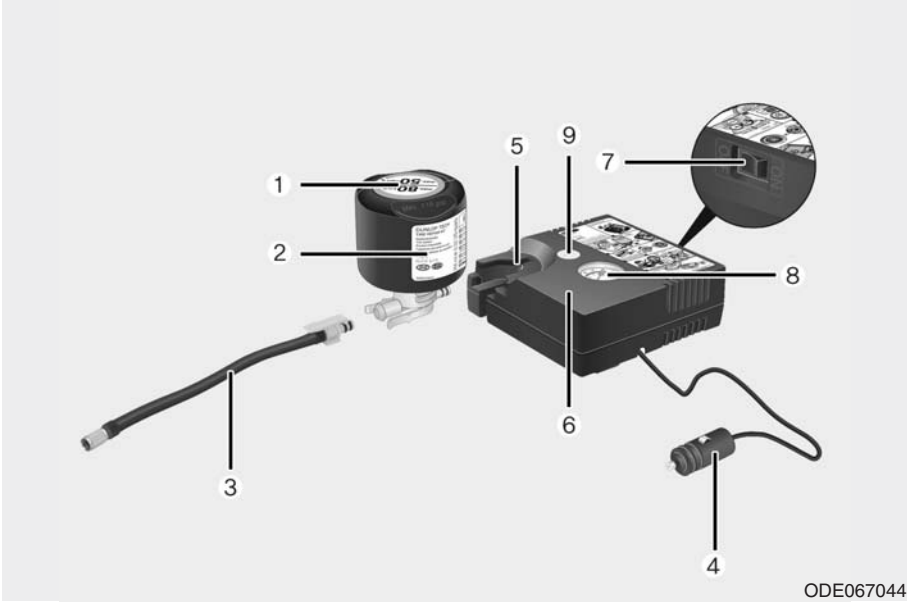

1. Speed restriction label
2. Sealant bottle and label with speed restriction
3. Filling hose from sealant bottle to wheel
4. Connectors and cable for the power outlet direct connection
5. Holder for the sealant bottle
6. Compressor
7. On/off switch
8. Pressure gauge for displaying the tire inflation pressure
9. Button for reducing tire inflation pressure

Connectors, cable and connection hose are stored in the compressor housing.

⚠ WARNING

Before using the Tire Mobility Kit, follow the instructions on the sealant bottle.

Remove the label with the speed restriction from the sealant bottle and apply it to the steering wheel.

Please note the expiration date on the sealant bottle.

ODEP069006

⚠ CAUTION

Before using the tire repair kit, please read carefully the instruction attached on the sealant bottle. Detach the speed limit label on the sealant case and put it on a highly visible place. Always drive within the speed limit.

Using the Tire Mobility Kit

ODEP067048

Carefully follow below steps.

1. Shake the sealant bottle.

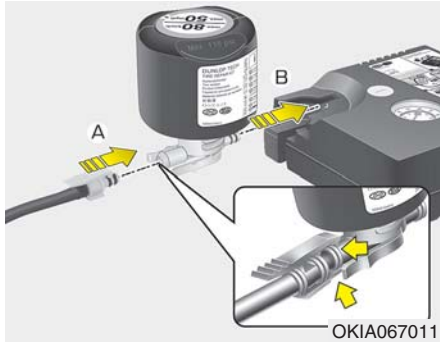

2. Connect the filling hose (3) onto the connector of the sealant bottle (A).
3. Ensure that button (9) on the compressor is not pressed.

4. Unscrew the valve cap from the valve of the defective wheel and screw filling hose (3) of the sealant bottle onto the valve.
5. Insert the sealant bottle into the housing of the compressor (5) so that the bottle is upright.

✻ NOTICE

If a visable foreign object has punctured the tire, do not remove it before using Tire Mobility Kit.

✻ NOTICE

If the sealant is injected when the tire air pressure injection valve and sealant injection hose are not fully interlocked, the sealant may overflow and clog the valve.

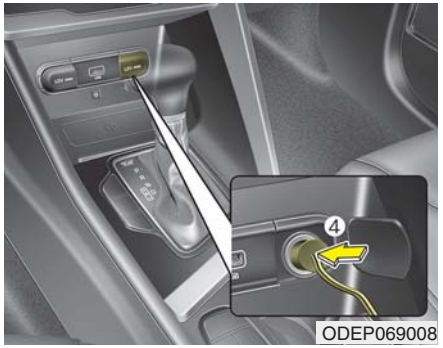

ODEP069008

6. Ensure that the compressor is switched off, position 0.
7. Connect between compressor and the vehicle power outlet using the cable and connectors (4).
8. With the engine start/stop button position on or ignition switch position on, switch on the compressor and let it run for approximately 5 ~ 7 minutes to fill the sealant up to cold tire recommended pressure. (Refer to “Tires and wheels” in chapter 8.). Be careful not to over-inflate the tire and stay away from the tire when filling it. When the tire and wheel are damaged, do not use Tire Mobility Kit for your safety.

⚠ WARNING - Tire pressure

Do not attempt to drive your vehicle if the tire pressure is below 200 kPa (29 psi). This could result in an accident due to sudden tire failure.

9. Switch off the compressor.
10. Detach the hoses from the sealant bottle connector and from the tire valve.

Return the Tire Mobility Kit to its storage location in the vehicle.

⚠ WARNING - Carbon monoxide

Carbon monoxide poisoning and suffocation is possible if the engine is left running in a poorly ventilated or unventilated location (such as inside a building).

Distributing the sealant

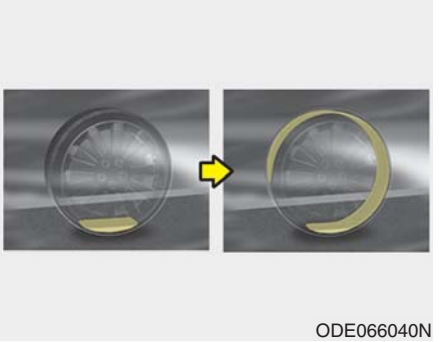
ODE066040N

11. Immediately drive approximately 7 ~ 10 km (4 ~ 6 miles or, about 10 min) to evenly distribute the sealant in the tire.

Do not exceed a speed of 80 km/h (50 mph). If possible, do not fall below a speed of 20 km/h (12 mph).

While driving, if you experience any unusual vibration, ride disturbance or noise, reduce your speed and drive with caution until you can safely pull off of the side of the road.

⚠ **CAUTION**

When you use the Tire Mobility Kit, the tire pressure sensors and wheel may be stained by sealant. Therefore, remove the tire pressure sensors and wheel stained by sealant and have your vehicle inspected by an authorized Kia dealer.

Checking the tire inflation pressure

1. After driving approximately 7 ~ 10 km (4 ~ 6 miles or about 10 min), stop at a safe location.
2. Connect the filling hose (3) of the compressor (clip mounted side) directly and then connect the fill ing hose (3) (opposite side) to the tire valve.
3. Connect between compressor and the vehicle power outlet using the cable and connectors.
4. Adjust the tire inflation pressure to the cold tire recommended pressure as indicated on the vehicle's placard or tire inflation pressure label located on the driver's side center pillar outer panel. (Refer to "Tires and wheels" in chapter 8.)
   - **To increase the inflation pressure :** Switch on the compressor, position I. To check the current inflation pressure setting, briefly switch off the compressor.

✻ **NOTICE**

The pressure gauge may show higher than actual reading when the compressor is running. To get an accurate tire reading, the compressor needs to be turned off.

⚠ **WARNING**

Do not let the compressor run for more than 10 minutes; otherwise, the device may overheat and be damaged.

- **To reduce the inflation pressure:** Press the button (9) on the compressor.

⚠ **CAUTION - Tire pressure sensor**

When you use the Tire Mobility Kit with sealant not approved by Kia, the tire pressure sensors may be damaged by sealant. The sealant on the tire pressure sensor and wheel should be removed when you replace the tire with a new one and inspect the tire pressure sensors at an authorized dealer.

Technical Data

		18 inch tire	16 inch tire
System Voltage		DC 12 V	DC 12 V
Working Voltage		DC 10 – 15 V	DC 10 – 15 V
Amperage rating		MAX. 10 ± 1 A (at DC 12V operation)	MAX. 10 ± 1 A (at DC 12V operation)
Suitable for use at temperatures		- 30 ~ + 70 °C (- 22 ~ + 158 °F)	- 30 ~ + 70 °C (- 22 ~ + 158 °F)
Max. working pressure		6 bar (87 psi)	6 bar (87 psi)
Size	Compressor	161 X 150 X 55.8 mm (6.3 X 5.9 X 2.2 in.)	161 X 150 X 55.8 mm (6.3 X 5.9 X 2.2 in.)
	Sealant bottle	ø 85 X 104 mm (ø 3.3 X 4.1 in.)	ø 85 X 81 mm (ø 3.3 X 3.2 in.)
	Compressor weight	650 ± 30 g (1.43 ± 0.07 lbs)	650 ± 30 g (1.43 ± 0.07 lbs)
	Sealant volume	300 ml (18.3 cu. in)	200 ml (12.2 cu. in.)

❊ Sealant and spare parts can be obtained and replaced at an authorized vehicle or tire dealer. Empty sealant bottles may be disposed of at home. Liquid residue from the sealant should be disposed of by your vehicle or tire dealer or in accordance with local waste disposal regulations.

TOWING

Towing service

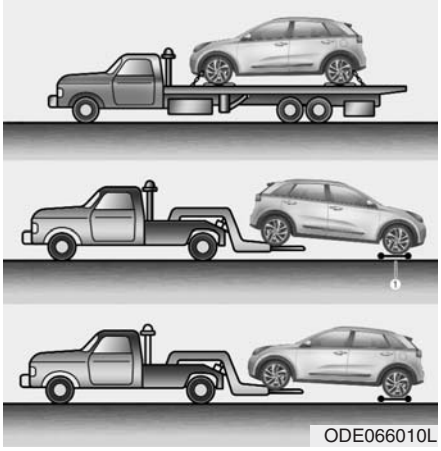

If emergency towing is necessary, we recommend having it done by an authorized Kia dealer or a commercial tow-truck service. Proper lifting and towing procedures are necessary to prevent damage to the vehicle. The use of wheel dollies (1) or flatbed is recommended.

On FWD vehicles, it is acceptable to tow the vehicle with the rear wheels on the ground (without dollies) and the front wheels off the ground. If any of the loaded wheels or suspension components are damaged or the vehicle is being towed with the front wheels on the ground, use a towing dolly under the front wheels. When being towed by a commercial tow truck and wheel dollies are not used, the front of the vehicle should always be lifted, not the rear.

⚠ WARNING - Side and curtain Air bag

If your vehicle is equipped with side and curtain air bag, set the ignition switch to LOCK or ACC position when the vehicle is being towed.

The side and curtain air bag may deploy when the ignition is ON, and the rollover sensor detects the situation as a rollover.

⚠ CAUTION - Towing

- ***Do not tow the vehicle backwards with the front wheels on the ground as this may cause damage to the vehicle.***
- ***Do not tow with sling-type equipment. Use wheel lift or flatbed equipment.***

When towing your vehicle in an emergency without wheel dollies :

1. Set the ignition switch in the ACC position.
2. Place the transmission shift lever in N (Neutral).
3. Release the parking brake.

⚠ CAUTION - Towing gear position

Failure to place the transmission shift lever in N (Neutral) may cause internal damage to the transmission.

Removable towing hook (if equipped)

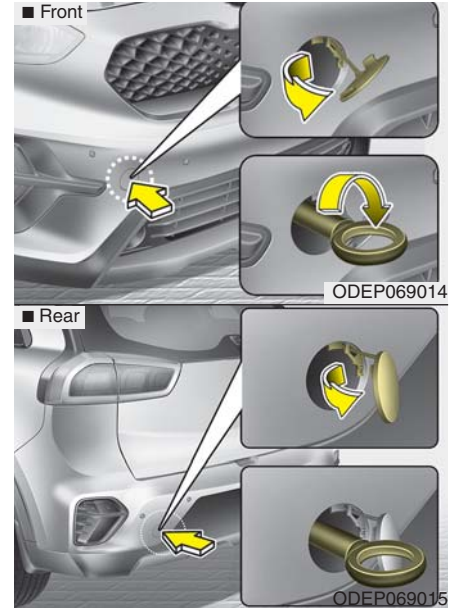

1. Open the liftgate, and remove the towing hook from the tool case.
2. Remove the hole cover pressing the lower part of the cover on the bumper.

3. Install the towing hook by turning it clockwise into the hole until it is fully secured.
4. Remove the towing hook and install the cover after use.

Emergency towing

If towing is necessary, have it done by an authorized Kia dealer or a commercial tow truck service.

If towing service is not available in an emergency, your vehicle may be temporarily towed using a cable or chain secured to the emergency towing hook under the front (or rear) of the vehicle. Use extreme caution when towing the vehicle. A driver must be in the vehicle to steer it and operate the brakes.

Towing in this manner may be done only on hard-surfaced roads for a short distance and at low speed. Also, the wheels, axles, power train, steering and brakes must all be in good condition.

- Do not use the tow hooks to pull a vehicle out of mud, sand or other conditions from which the vehicle cannot be driven out under its own power.
- Avoid towing a vehicle heavier than the vehicle doing the towing.
- The drivers of both vehicles should communicate with each other frequently.

⚠ CAUTION

Using a portion of the vehicle other than the tow hooks for towing may damage the body of your vehicle.

- Attach a towing strap to the tow hook.
- Use only a cable or chain specifically intended for use in towing vehicles. Securely fasten the cable or chain to the towing hook provided.
- Accelerate or decelerate the vehicle in a slow and gradual manner while maintaining tension on the tow rope or chain to start or drive the vehicle, otherwise tow hooks and the vehicle may be damaged.
- Before emergency towing, check if the hook is not broken or damaged.
- Fasten the towing cable or chain securely to the hook.
- Do not jerk the hook. Apply it steadily and with even force.
- To avoid damaging the hook, do not pull from the side or at a vertical angle. Always pull straight ahead.

⚠ WARNING - Emergency Towing Precautions

Use extreme caution when towing the vehicle.

- **Avoid sudden starts or erratic driving maneuvers which would place excessive stress on the emergency towing hook and towing cable or chain. The hook and towing cable or chain may break and cause serious injury or damage.**
- **If the disabled vehicle is unable to be moved, do not forcibly continue the towing. We recommend that you contact an authorized Kia dealer or a commercial tow truck service for assistance.**
- **Tow the vehicle as straight ahead as possible.**
- **Keep away from the vehicle during towing.**

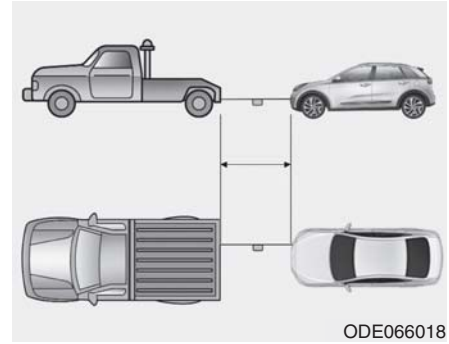

- Use a towing strap less than 5 m (16 feet) long. Attach a white or red cloth (about 30 cm (12 inches) wide) in the middle of the strap for easy visibility.
- Drive carefully so that the towing strap is not loosened during towing.
- The driver must be in the vehicle for steering and braking operations when the vehicle is towed and passengers other than the driver must not be allowed to be on board.

Emergency towing precautions

- Turn the ignition switch to ACC so the steering wheel isn't locked.
- Place the transmission shift lever in N (Neutral).
- Release the parking bake.
- Press the brake pedal with more force than normal since you will have reduced brake performance.
- More steering effort will be required because the power steering system will be disabled.
- If you are driving down a long hill, the brakes may overheat and brake performance will be reduced. Stop often and let the brakes cool off.
- The vehicle should be towed at a speed of 25 km/h (15 mph) or less within the distance of 20 km (12 miles).
- If the car is being towed with all four wheels on the ground, it can be towed only from the front. Be sure that the transmission is in N (Neutral). Be sure the steering is unlocked by placing the ignition switch in the ACC position. A driver must be in the towed vehicle to operate the steering and brakes.

⚠ CAUTION - Dual clutch transmission

- ***To avoid serious damage to the dual clutch transmission, limit the vehicle speed to 15 km/h (10 mph) and drive less than 1.5 km (1 mile) when towing.***
- ***Before towing, check the dual clutch transmission for fluid leaks under your vehicle. If the dual clutch transmission fluid is leaking, flatbed equipment or a towing dolly must be used.***

IF AN ACCIDENT OCCURS

⚠ WARNING - High voltage components

- **For your safety, do not touch high voltage cables, connectors and package modules. High voltage components are orange in color.**
- **Exposed cables or wires may be visible inside or outside of the vehicle. Never touch the wires or cables, because an electric shock, serious injury, or death may occur.**

✻ NOTICE

Any gas or electrolyte leakage from your vehicle is not only poisonous but also flammable. Upon witnessing one of those, make sure your car is parked in a safe area away from any roads, open the windows, and maintain a safe distance away from the vehicle. Immediately contact an authorized Kia dealer and advise them that a hybrid vehicle is involved.

- If you need towing, refer to "Towing" in the previous pages.
- When the vehicle is severely damaged, remain a safe distance of 15 meter (50 feet) or more between your vehicle and other vehicles/flammables.

If a fire occurs :

Immediately call emergency services (911) and advise the emergency responders that a hybrid vehicle is involved.

⚠ WARNING - Submersion in water

Do not touch your vehicle if it has been submerged in water. The high-voltage battery may cause shock or may catch fire. Immediately contact the authorities and advise them of the condition of your vehicle and that a hybrid vehicle is involved.

Maintenance

Engine compartment 7-4
Maintenance services 7-5
• Owner's responsibility 7-5
• Owner maintenance precautions 7-6
Owner maintenance 7-7
• Owner maintenance schedule 7-7
Scheduled maintenance service. 7-9
Explanation of scheduled maintenance items . . . 7-15
Checking fluid levels 7-18
Engine oil. 7-19
• Checking the engine oil level 7-19
• Changing the engine oil and filter 7-20
Coolant 7-21
• Checking the coolant level 7-21
• Engine coolant 7-22
• Inverter coolant 7-22
• Recommended coolant 7-23
• Changing the coolant 7-25
Brake fluid 7-26
• Checking the brake fluid level 7-26
Engine clutch actuator fluid 7-28
• Checking the engine clutch actuator fluid level 7-28
Washer fluid 7-30
• Checking the washer fluid level 7-30
Parking brake 7-31
• Checking the parking brake. 7-31
Air cleaner. 7-32
• Filter replacement 7-32
Climate control air filter 7-34
• Filter inspection 7-34
Wiper blades 7-36
• Blade inspection. 7-36
• Blade replacement 7-36
Battery (Plug-in Hybrid) 7-39
• For best battery service 7-39
• Recharging the battery 7-40
• Reset items 7-41
Tires and wheels 7-42
• Tire care 7-42
• Recommended cold tire inflation pressures 7-42
• Tire pressure 7-43
• Checking tire inflation pressure. 7-43
• Tire rotation. 7-44
• Wheel alignment and tire balance 7-45
• Tire replacement 7-46
• Wheel replacement 7-46
• Tire traction 7-47
• Tire maintenance 7-47
• Tire sidewall labeling 7-47

• Tire terminology and definitions 7-51
• All season tires 7-54
• Summer tires 7-54
• Snow tires 7-55
• Radial-ply tires 7-55
• Low aspect ratio tire 7-56
Fuses 7-58
• Inner panel fuse replacement 7-59
• Engine compartment fuse replacement 7-61
• Fuse/relay panel description 7-64
Light bulbs 7-86
• Bulb replacement precaution 7-86
• Light bulb position (Front) 7-87
• Light bulb position (Rear) 7-88
• Light bulb position (Side) 7-89
• Headlamp (High/Low beam) (Bulb type) bulb replacement (Headlamp type A) 7-90
• Front turn signal lamp (Bulb type) bulb replacement (Headlamp type A) 7-91
• Front side marker (Bulb type) bulb replacement (Headlamp type A) 7-92
• Headlamp (High/Low beam) (LED type) bulb replacement (Headlamp type B) 7-92
• Front turn signal (LED type) bulb replacement (Headlamp type B) 7-93
• Front side marker (LED type) bulb replacement (Headlamp type B) 7-93
• Daytime running lamp/Position lamp (LED type) bulb replacement 7-93
• Front fog lamp (Bulb/LED type) bulb replacement 7-94
• Stop and tail lamp, Rear turn signal lamp (Bulb type) bulb replacement 7-94
• Tail lamp (inside) (Bulb type) bulb replacement . . . 7-95
• Rear side marker (Bulb type) bulb replacement . . . 7-96
• Stop and tail lamp (LED type) bulb replacement . . 7-98
• Rear side marker (LED type) bulb replacement . . . 7-98
• Back-up lamp (Bulb type) bulb replacement 7-98
• License plate lamp (Bulb type) bulb replacement . . 7-99
• High mounted stop lamp (LED type) bulb replacement 7-99
• Side repeater lamp (LED type) bulb replacement . . 7-100
• Map lamp (Bulb type) bulb replacement 7-100
• Map lamp (LED type) bulb replacement 7-101
• Vanity mirror lamp (Bulb type) bulb replacement . . 7-101
• Room lamp (Bulb type) bulb replacement 7-102
• Room lamp (LED type) bulb replacement 7-102
• Liftgate room lamp (Bulb type) bulb replacement . . 7-103

• Liftgate room lamp (LED type) bulb replacement. . 7-103
Appearance care. 7-104
• Exterior care 7-104
• Interior care 7-110
Emission control system. 7-114
• Crankcase emission control system 7-114
• Evaporative emission control (including ORVR: Onboard Refueling Vapor Recovery) system 7-114
• Exhaust emission control system 7-115

ENGINE COMPARTMENT

■ **Gasoline engine (Kappa 1.6L GDI)**

1. Engine coolant reservoir
2. Engine oil filler cap
3. Engine oil dipstick
4. Brake fluid reservoir
5. Inverter coolant reservoir
6. Fuse box
7. Engine clutch actuator reservoir tank
8. Air cleaner
9. Windshield washer fluid reservoir

❊ The actual engine room in the vehicle may differ from the illustration.

ODEP079115

MAINTENANCE SERVICES

You should exercise the utmost care to prevent damage to your vehicle and injury to yourself whenever performing any maintenance or inspection procedures.

Should you have any doubts concerning the inspection or servicing of your vehicle, we strongly recommend that you have an authorized Kia dealer perform this work.

An authorized Kia dealer has factory-trained technicians and genuine Kia parts to service your vehicle properly. For expert advice and quality service, see an authorized Kia dealer.

Inadequate, incomplete or insufficient servicing may result in operational problems with your vehicle that could lead to vehicle damage, an accident, or personal injury.

Owner’s responsibility

✻ NOTICE

Maintenance Service and Record Retention are the owner's responsibility.
You should retain documents that show proper maintenance has been performed on your vehicle in accordance with the scheduled maintenance service charts shown on the following pages. You need this information to establish your compliance with the servicing and maintenance requirements of your vehicle warranties.
Detailed warranty information is provided in your Warranty & Consumer Information manual.

Repairs and adjustments required as a result of improper maintenance or a lack of required maintenance are not covered.

We recommend you have your vehicle maintained and repaired by an authorized Kia dealer. An authorized Kia dealer meets Kia’s high service quality standards and receives technical support from Kia in order to provide you with a high level of service satisfaction.

Owner maintenance precautions

Improper or incomplete service may result in problems. This section gives instructions only for the maintenance items that are easy to perform.

As explained earlier in this section, several procedures can be done only by an authorized Kia dealer with special tools.

✻ NOTICE

Improper owner maintenance during the warranty period may affect warranty coverage. For details, read the separate Warranty & Consumer Information manual provided with the vehicle. If you're unsure about any servicing or maintenance procedure, have it done by an authorized Kia dealer.

⚠ WARNING - Maintenance work

Do not wear jewelry or loose clothing while working under the hood of your vehicle with the engine running. These can become entangled in moving parts, if you must run the engine while working under the hood, make certain that you remove all jewelry (especially rings, bracelets, watches, and necklaces) and all neckties, scarves, and similar loose clothing before getting near the engine or cooling fans.

⚠ WARNING - Touching metal parts

Do not touch metal parts (including strut bars) while the engine is operating or hot. Doing so could result in serious bodily injury. Turn the engine off and wait until the metal parts cool down to perform any maintenance work on the vehicle.

OWNER MAINTENANCE

The following lists are vehicle checks and inspections that should be performed by the owner or an authorized Kia dealer at the frequencies indicated to help ensure safe, dependable operation of your vehicle.

Any adverse conditions should be brought to the attention of your dealer as soon as possible.

These Owner Maintenance Checks are generally not covered by warranties and you may be charged for labor, parts and lubricants used.

Owner maintenance schedule

When you stop for fuel:

- Check the engine oil level.
- Check the coolant level in coolant reservoir.
- Check the windshield washer fluid level.
- Look for low or under-inflated tires.

⚠ WARNING - Hot coolant

Be careful when checking your engine coolant level when the engine is hot. Scalding hot coolant and steam may blow out under pressure.

⚠ WARNING

When you open the engine hood, turn the Hybrid system off. If not, it may result in death or serious injury because of the high voltage flow.

While operating your vehicle:

- Note any changes in the sound of the exhaust or any smell of exhaust fumes in the vehicle.
- Check for vibrations in the steering wheel. Notice any increased steering effort or looseness in the steering wheel, or change in its straight-ahead position.
- Notice if your vehicle constantly turns slightly or “pulls” to one side when traveling on smooth, level road.
- When stopping, listen and check for unusual sounds, pulling to one side, increased brake pedal travel or “hard-to-push” brake pedal.
- If any slipping or changes in the operation of your transmission occurs, check the transmission fluid level.
- Check the dual clutch transmission P (Park) function.
- Check the parking brake.
- Check for fluid leaks under your vehicle (water dripping from the air conditioning system during or after use is normal).

At least monthly:

- Check the coolant level in the engine coolant reservoir.
- Check the operation of all exterior lights, including the stoplights, turn signals and hazard warning flashers.
- Check the inflation pressures of all tires including the spare for tires that are worn, show uneven wear, or are damaged.
- Check for loose wheel lug nuts.

At least twice a year (i.e., every Spring and Fall) :

- Check the radiator, heater and air conditioning hoses for leaks or damage.
- Check the windshield washer spray and wiper operation. Clean the wiper blades with clean cloth dampened with washer fluid.
- Check the headlight alignment.
- Check the muffler, exhaust pipes, shields and clamps.
- Check the lap/shoulder belts for wear and function.

At least once a year :

- Clean the body and door drain holes.
- Lubricate the door hinges and check the hood hinges.
- Lubricate the door and hood locks and latches.
- Lubricate the door rubber weatherstrips.
- Check the air conditioning system.
- Inspect and lubricate dual clutch transmission linkage and controls.
- Clean the battery and terminals.
- Check the brake fluid level.

SCHEDULED MAINTENANCE SERVICE

Follow the Normal Maintenance Schedule if the vehicle is usually operated where none of the following conditions apply. If any of the following conditions apply, follow the Maintenance Under Severe Usage Conditions.

- Repeatedly driving short distance of less than 8 km (5 miles) in normal temperature or less than 16 km (10 miles) in freezing temperature.
- Extensive engine idling or low speed driving for long distances.
- Driving on rough, dusty, muddy, unpaved, graveled or salt-spread roads.
- Driving in areas using salt or other corrosive materials or in very cold weather.
- Driving in heavy dust condition.
- Driving in heavy traffic area.
- Driving on uphill, downhill, or mountain roads repeatedly.
- Towing a trailer or using a camper on roof rack.
- Driving for patrol car, taxi, other commercial use of vehicle towing.
- Driving over 170 km/h (106 mph).
- Frequently driving in stop-and-go conditions.

If your vehicle is operated under the above conditions, you should inspect, replace or refill more frequently than the following Normal Maintenance Schedule. After 120 months or 240,000 km (150,000 miles) continue to follow the prescribed maintenance intervals.

Normal Maintenance Schedule - Non Turbo Models

The following maintenance services must be performed to ensure good emission control and performance.
Keep receipts for all vehicle emission services to protect your warranty. Where both mileage and time are shown, the frequency of service is determined by whichever occurs first.

MAINTENANCE INTERVALS / MAINTENANCE ITEM		Number of months or driving distance, whichever comes first														
		Months	**12**	**24**	**36**	**48**	**60**	**72**	**84**	**96**	**108**	**120**	**132**	**144**	**156**	**168**	**180**
		Miles×1,000	**7.5**	**15**	**22.5**	**30**	**37.5**	**45**	**52.5**	**60**	**67.5**	**75**	**82.5**	**90**	**97.5**	**105**	**112.5**
		Km×1,000	**12**	**24**	**36**	**48**	**60**	**72**	**84**	**96**	**108**	**120**	**132**	**144**	**156**	**168**	**180**
Engine oil and engine oil filter	Kappa 1.6L GDI	R	R	R	R	R	R	R	R	R	R	R	R	R	R	R
Fuel additives *1		Add every 12,000 km (7,500 miles) or 12 months														
Air cleaner filter		I	I	I	R	I	I	I	R	I	I	I	R	I	I	I
Spark plugs	Kappa 1.6L GDI	Replace every 150,000 km (100,000 miles) or 120 months														
HSG belt *2		I	I	I	R	I	I	I	R	I	I	I	R	I	I	I
Rotate tires		Rotate every 12,000 km (7,500 miles)														
Climate control air filter		-	R	-	R	-	R	-	R	-	R	-	R	-	R	-

I : Inspect and if necessary, adjust, correct, clean or replace.

R : Replace or change.

*1 : If TOP TIER Detergent Gasoline is not available, one bottle of additive is recommended. Additives are available from your authorized Kia dealer along with information on how to use them. Do not mix other additives.

*2 : Inspect HSG belt for evidence of cuts, cracks, excessive wear or oil saturation and replace if necessary. If HSG belt noise occurred, readjust HSG belt tension before replace.

Normal Maintenance Schedule - Non Turbo Models(CONT.)

MAINTENANCE INTERVALS / MAINTENANCE ITEM	Number of months or driving distance, whichever comes first															
	Months	12	24	36	48	60	72	84	96	108	120	132	144	156	168	180
	Miles×1,000	7.5	15	22.5	30	37.5	45	52.5	60	67.5	75	82.5	90	97.5	105	112.5
	Km×1,000	12	24	36	48	60	72	84	96	108	120	132	144	156	168	180
Vacuum hose		I	I	I	I	I	I	I	I	I	I	I	I	I	I	I
Coolant (Engine)		At first, replace at 192,000 km (120,000 miles) or 10 years, after that, replace every 48,000 km (30,000 miles) or 24 months														
Battery condition		I	I	I	I	I	I	I	I	I	I	I	I	I	I	I
Brake lines, hoses and connections (Including booster)		I	I	I	I	I	I	I	I	I	I	I	I	I	I	I
Brake discs and pads		I	I	I	I	I	I	I	I	I	I	I	I	I	I	I
Steering gear rack, linkage and boots		I	I	I	I	I	I	I	I	I	I	I	I	I	I	I
Driveshaft and boots		I	I	I	I	I	I	I	I	I	I	I	I	I	I	I
Suspension ball joints		I	I	I	I	I	I	I	I	I	I	I	I	I	I	I
Air conditioner compressor/refrigerant		I	I	I	I	I	I	I	I	I	I	I	I	I	I	I
Exhaust system		I	I	I	I	I	I	I	I	I	I	I	I	I	I	I

I : Inspect and if necessary, adjust, correct, clean or replace.

R : Replace or change.

Normal Maintenance Schedule - Non Turbo Models (CONT.)

MAINTENANCE INTERVALS / MAINTENANCE ITEM	Number of months or driving distance, whichever comes first															
	Months	12	24	36	48	60	72	84	96	108	120	132	144	156	168	180
	Miles×1,000	7.5	15	22.5	30	37.5	45	52.5	60	67.5	75	82.5	90	97.5	105	112.5
	Km×1,000	12	24	36	48	60	72	84	96	108	120	132	144	156	168	180
Cooling system		-	-	-	I	-	I	-	I	-	I	-	I	-	I	-
Dual clutch transmission fluid		-	-	-	-	I	-	-	-	-	I	-	-	-	-	I
Engine clutch actuator fluid		I	R	I	R	I	R	I	R	I	R	I	R	I	R	I
Engine clutch actuator hose and lines		I	I	I	I	I	I	I	I	I	I	I	I	I	I	I
Vapor hose, fuel filler cap, fuel tank and canister		-	I	-	I	-	I	-	I	-	I	-	I	-	I	-
Fuel tank air filter *3		-	I	-	I	-	I	-	I	-	I	-	I	-	I	-
Fuel lines, hoses and connections		-	-	-	I	-	-	-	I	-	-	-	I	-	-	-
Parking brake		-	I	-	I	-	I	-	I	-	I	-	I	-	I	-
Brake fluid		I	I	I	R	I	I	I	R	I	I	I	R	I	I	I
Cooling system hoses and connections		Inspect every 12,000 km (7,500 miles) or 6 months														
Clutch (if equipped) and brake pedal free play		Inspect every 12,000 km (7,500 miles) or 6 months														
All latch, hinges and locks		Inspect every 24,000 km (15,000 miles) or 12 months														

I : Inspect and if necessary, adjust, correct, clean or replace.

R : Replace or change.

*3 : Fuel tank air filter are considered to be maintenance free but periodic inspection is recommended for this maintenance schedule depends on fuel quality.

Maintenance Under Severe Usage Conditions - Non Turbo Models

The following items must be serviced more frequently on cars normally used under severe driving conditions. Refer to the chart below for the appropriate maintenance intervals.

R : Replace I : Inspect and, after inspection, clean, adjust, repair or replace if necessary

MAINTENANCE ITEM	MAINTENANCE OPERATION	MAINTENANCE INTERVALS	DRIVING CONDITION
Engine oil and engine oil filter	R	Every 6,000 km (3,750 miles) or 6 months	A, B, C, D, E, F, G, H, I, J, K
Air cleaner filter	R	More frequently	C, E
Spark plugs	R	More frequently	A, B, F, G, H, I, K
Dual clutch transmission fluid	R	Every 120,000 km (75,000 miles)	C, D, E, F, G, H, I, J
HSG (Hybrid Starter & Generator) belt	R	Every 48,000 km (30,000 miles) or 24 months	C, D, E, K
	I	Every 6,000 km (3,750 miles) or 6 months	C, D, E, K
Brake discs and pads, calipers and rotors	I	More frequently	C, D, E, G, H
Parking brake	I	More frequently	C, D, G, H
Steering gear rack, linkage and boots	I	More frequently	C, D, E, F, G
Suspension ball joints	I	More frequently	C, D, E, F, G

MAINTENANCE ITEM	MAINTENANCE OPERATION	MAINTENANCE INTERVALS	DRIVING CONDITION
Drive shafts and boots	I	More frequently	C, D, E, F, G, H, I, J
Climate control air filter	R	More frequently	C, E, G

Severe driving conditions

A - Repeatedly driving short distance of less than 8 km (5 miles) in normal temperature or less than 16 km (10 miles) in freezing temperature

B - Extensive engine idling or low speed driving for long distances

C - Driving on rough, dusty, muddy, unpaved, graveled or salt-spread roads

D - Driving in areas using salt or other corrosive materials or in very cold weather

E - Driving in heavy dust condition

F - Driving in heavy traffic area

G - Driving on uphill, downhill, or mountain road repeatedly

H - Towing a Trailer, or using a camper, or roof rack

I - Driving as a patrol car, taxi, other commercial use or vehicle towing

J - Driving over 170 km/h (106 mph)

K - Frequently driving in stop-and-go conditions

EXPLANATION OF SCHEDULED MAINTENANCE ITEMS

Engine oil and filter

The engine oil and filter should be changed at the intervals specified in the maintenance schedule. If the vehicle is being driven in severe conditions, more frequent oil and filter changes are required.

HSG (Hybrid starter & generator) belt

The HSG belt should be changed at the intervals specified in the maintenance schedule.

Fuel filter (for gasoline)

Kia gasoline vehicle is equipped a lifetime fuel filter that integrated with the fuel tank. Regular maintenance or replacement is not needed but depends on fuel quality. If there are some important safety matters like fuel flow restriction, surging, loss of power, hard starting problem etc, fuel filter inspection or replace is needed.

The fuel filter be Inspected or replaced by an authorized Kia dealer.

Fuel lines, fuel hoses and connections

Check the fuel lines, fuel hoses and connections for leakage and damage. Have an authorized Kia dealer replace any damaged or leaking parts immediately.

Vapor hose and fuel filler cap

The vapor hose and fuel filler cap should be inspected at those intervals specified in the maintenance schedule. Make sure that a new vapor hose or fuel filler cap is correctly replaced.

Vacuum crankcase ventilation hoses

Inspect the surface of hoses for evidence of heat and/or mechanical damage. Hard and brittle rubber, cracking, tears, cuts, abrasions, and excessive swelling indicate deterioration. Particular attention should be paid to examine those hose surfaces nearest to high heat sources, such as the exhaust manifold.

Inspect the hose routing to assure that the hoses do not come in contact with any heat source, sharp edges or moving component which might cause heat damage or mechanical wear. Inspect all hose connections, such as clamps and couplings, to make sure they are secure, and that no leaks are present. Hoses should be replaced immediately if there is any evidence of deterioration or damage.

Air cleaner filter

A Genuine Kia air cleaner filter is recommended when the filter is replaced.

Spark plugs

Make sure to install new spark plugs of the correct heat range.

Cooling system

Check the cooling system components, such as the radiator, coolant reservoir, hoses and connections for leakage and damage. Replace any damaged parts.

Coolant (Engine / Inverter)

The coolant should be changed at the intervals specified in the maintenance schedule.

Dual clutch transmission Fluid

Inspect the dual clutch transmission fluid according to the maintenance schedule.

Brake hoses and lines

Visually check for proper installation, chafing, cracks, deterioration and any leakage. Replace any deteriorated or damaged parts immediately.

Brake fluid

Check the brake fluid level in the brake fluid reservoir. The level should be between “MIN” and “MAX” marks on the side of the reservoir. Use only hydraulic brake fluid conforming to DOT 4 specification.

Parking brake

Inspect the parking brake system including the parking brake pedal and cables.

Brake discs, pads, calipers and rotors

Check the pads for excessive wear, discs for run out and wear, and calipers for fluid leakage.

Exhaust pipe and muffler

Visually inspect the exhaust pipes, muffler and hangers for cracks, deterioration, or damage. Start the engine and listen carefully for any exhaust gas leakage. Tighten connections or replace parts as necessary.

Suspension mounting bolts

Check the suspension connections for looseness or damage. Retighten to the specified torque.

Steering gear box, linkage & boots/lower arm ball joint

With the vehicle stopped and engine off, check for excessive free-play in the steering wheel.

Check the linkage for bends or damage. Check the dust boots and ball joints for deterioration, cracks, or damage. Replace any damaged parts.

Drive shafts and boots

Check the drive shafts, boots and clamps for cracks, deterioration, or damage. Replace any damaged parts and, if necessary, repack the grease.

Air conditioning refrigerant

Check the air conditioning lines and connections for leakage and damage.

CHECKING FLUID LEVELS

When checking engine oil, engine coolant, brake fluid, and washer fluid, always be sure to clean the area around any filler plug, drain plug, or dipstick before checking or draining any lubricant or fluid. This is especially important in dusty or sandy areas and when the vehicle is used on unpaved roads. Cleaning the plug and dipstick areas will prevent dirt and grit from entering the engine and other mechanisms that could be damaged.

ENGINE OIL

Checking the engine oil level

■ Gasoline Engine (Kappa 1.6L GDI)

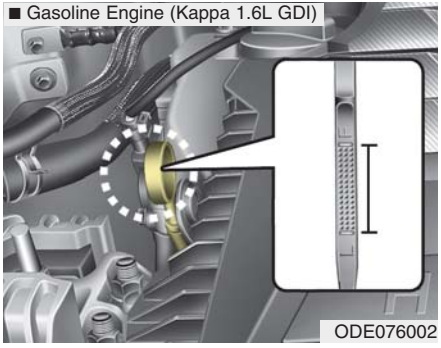

ODE076002

1. Be sure the vehicle is on level ground.
2. Start the engine and allow it to reach normal operating temperature.
3. Turn the engine off and wait for a few minutes (about 5 minutes) for the oil to return to the oil pan.
4. Pull the dipstick out, wipe it clean, and reinsert it fully.

⚠ WARNING - Radiator hose

Be very careful not to touch the radiator hose when checking or adding engine oil as it may be hot enough to burn you.

5. Pull the dipstick out again and check the level. The level should be between F and L.

⚠ CAUTION - Replacing engine oil

Do not overfill the engine oil. It may damage the engine.

■ Gasoline Engine (Kappa 1.6L GDI)

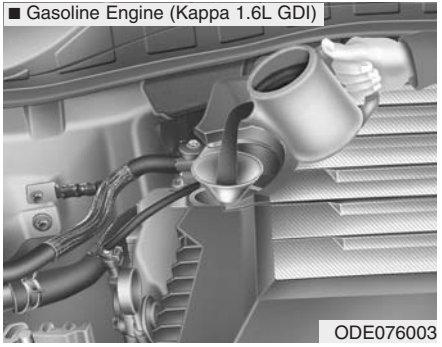

ODE076003

If it is near or at L, add enough oil to bring the level to F. **Do not overfill.**

Use a funnel to help prevent oil from being spilled on engine components.

Use only the specified engine oil. (Refer to "Recommended lubricants and capacities" in chapter 8.)

Changing the engine oil and filter

Have engine oil and filter changed by an authorized Kia dealer according to the Maintenance Schedule at the beginning of this chapter.

⚠ WARNING - Used engine oil

Used engine oil may cause irritation or cancer of the skin if left in contact with the skin for prolonged periods of time. Always protect your skin by washing your hands thoroughly with soap and warm water as soon as possible after handling used oil.

COOLANT

The high-pressure cooling system has a reservoir filled with year round antifreeze coolant. The reservoir is filled at the factory.

Check the antifreeze protection and coolant level at least once a year: at the beginning of the winter season, and before traveling to a colder climate.

⚠ CAUTION - Radiator cap

Never attempt to remove the radiator cap while the engine is operating or hot. Doing so might lead to cooling system and engine damage.

Checking the coolant level

⚠ WARNING

Removing radiator cap

Never attempt to remove the radiator cap while the engine is operating or hot. Doing so might lead to cooling system and engine damage and could result in serious personal injury from escaping hot coolant or steam.

- Turn the engine off and wait until it cools down. Use extreme care when removing the radiator cap. Wrap a thick towel around it, and turn it counterclockwise slowly to the first stop. Step back while the pressure is released from the cooling system.

  When you are sure all the pressure has been released, press down on the cap, using a thick towel, and continue turning counterclockwise to remove it.
- Even if the engine is not operating, do not remove the radiator cap or the drain plug while the engine and radiator are hot. Hot coolant and steam may still blow out under pressure, causing serious injury.

  The engine coolant and/or inverter coolant level is influenced by the hybrid system temperature. Before checking or refilling the engine coolant and/or inverter coolant, turn the hybrid vehicle off.

⚠ WARNING - Cooling fan

Use caution when working near the blade of the cooling fan. The electric motor (cooling fan) is controlled by engine coolant temperature, refrigerant pressure and vehicle speed. it may sometimes operate even when the engine is not running.

Engine coolant

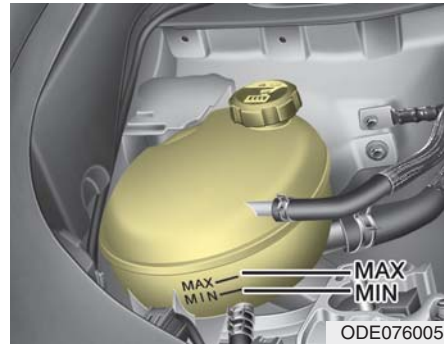

ODE076005

Check the condition and connections of all cooling system hoses and heater hoses. Replace any swollen or deteriorated hoses.

The coolant level should be filled between MAX and MIN marks on the side of the coolant reservoir when the engine is cool.

If the coolant level is low, add enough specified coolant to provide protection against freezing and corrosion. Bring the level to MAX, but do not overfill. If frequent additions are required, see an authorized Kia dealer for a cooling system inspection.

Inverter coolant

ODEP079053

The coolant level should be filled between MAX and MIN marks on the side of the coolant reservoir when the engine is cool.

If the coolant level is low, add enough specified coolant to provide protection against freezing and corrosion. Bring the level to MAX, but do not overfill. If frequent additions are required, see an authorized Kia dealer for a cooling system inspection.

Recommended coolant

- When adding coolant, use only deionized water or soft water for your vehicle and never mix hard water in the coolant filled at the factory. An improper coolant mixture can result in serious malfunction or engine damage.
- The engine in your vehicle has aluminum engine parts and must be protected by an ethylene-glycol with phosphate based coolant to prevent corrosion and freezing.
- DO NOT USE alcohol or methanol coolant or mix them with the specified coolant.
- Do not use a solution that contains more than 60% antifreeze or less than 35% antifreeze. This would reduce the effectiveness of the solution.

For mixture percentage, refer to the following table.

Ambient Temperature	Mixture Percentage (volume)	
	Antifreeze	Water
-15°C (5°F)	35	65
-25°C (-13°F)	40	60
-35°C (-31°F)	50	50
-45°C (-49°F)	60	40

■ Engine coolant reservoir cap

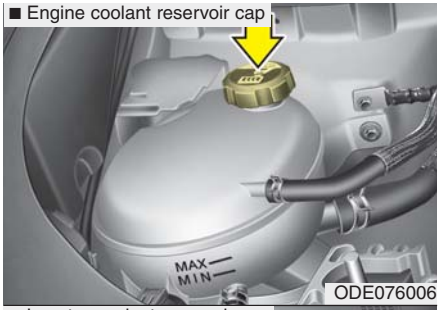

ODE076006

■ Inverter coolant reservoir cap

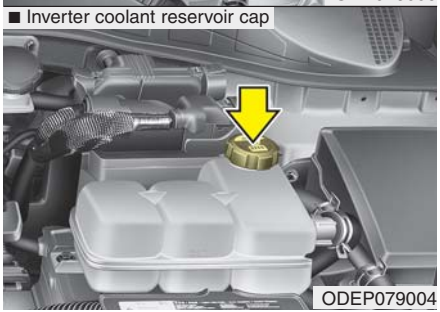

ODEP079004

⚠ WARNING

Radiator cap

Do not remove the radiator cap when the engine and radiator are hot. Scalding hot coolant and steam may blow out under pressure which may result in serious injury.

✻ NOTICE

Make sure the coolant cap is properly closed after refill of coolant. Otherwise the engine could be overheated while driving.

■ Engine room front view

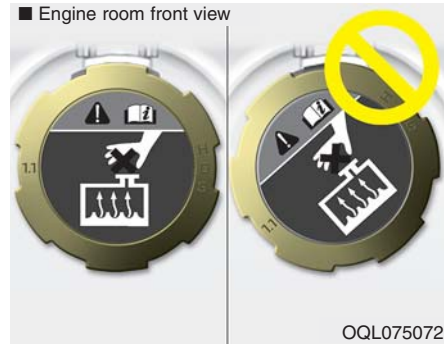

OQL075072

1. Check if the radiator cap label is straight front.

■ Engine room rear view

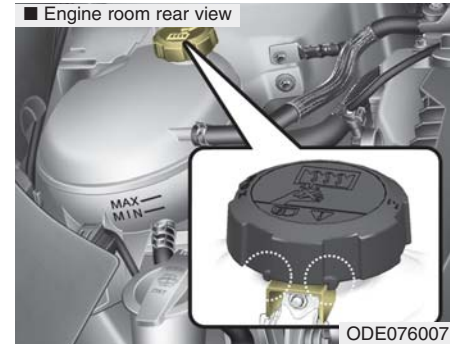

ODE076007

2. Make sure that the tiny protrusions inside the coolant cap should be securely interlocked.

Changing the coolant

Have the coolant changed by an authorized Kia dealer according to the Maintenance Schedule at the beginning of this chapter.

⚠ CAUTION

Put a thick cloth or fabric around the radiator cap before refilling the coolant in order to prevent the coolant from overflowing into engine parts such as the generator.

BRAKE FLUID

Checking the brake fluid level

Check the fluid level in the reservoir periodically. The fluid level should be between MAX (Maximum) and MIN (Minimum) marks on the side of the reservoir.

Before removing the reservoir cap and adding brake fluid, clean the area around the reservoir cap thoroughly to prevent brake fluid contamination.

⚠ **CAUTION - Proper fluid**

Only use brake fluid in brake system. Small amounts of improper fluids (such as engine oil) can cause damage to the brake system.

Periodically check that the fluid level in the brake fluid reservoir is between MIN and MAX. The level will fall with accumulated mileage. This is a normal condition associated with the wear of brake linings. If the fluid level is excessively low, have the brake system checked by an authorized Kia dealer.

Use only the specified brake fluid. (Refer to "Recommended lubricants and capacities" in chapter 8.)

Never mix different types of fluid.

In the event the brake system requires frequent additions of fluid, the vehicle should be inspected by an authorized Kia dealer.

When changing and adding brake fluid, handle it carefully. Do not let it come in contact with your eyes. If brake fluid should come in contact with your eyes, immediately flush them with a large quantity of fresh tap water. Have your eyes examined by a doctor as soon as possible.

⚠ **CAUTION - Brake fluid**

Do not allow brake fluid to contact the vehicle's body paint, as paint damage will result.

Brake fluid, which has been exposed to open air for an extended time should never be used as its quality cannot be guaranteed. It should be disposed of properly.

⚠ **CAUTION**

To maintain your vehicle's best brake and ABS/ESC performance, use Kia genuine brake fluid as in the specification. (Classification : SAE J1704 DOT-4 LV, ISO4925 CLASS-6, FMVSS116 DOT-4)

ENGINE CLUTCH ACTUATOR FLUID

Checking the engine clutch actuator fluid level

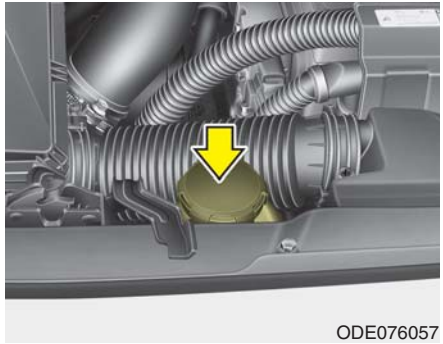
ODE076057

In normal driving conditions, the actuator fluid level does not go down rapidly. However, oil consumption rate may rise as vehicle mileage increases, and leakage in actuator related parts may result in increased consumption of the engine clutch actuator oil. Regularly check and make sure the engine clutch actuator oil fluid level is between [MIN] and [MAX] marks.

If the oil level is below [MIN] mark, we recommend that your vehicle be checked by an authorized Kia dealer.

If the fluid level is excessively low, we recommend that the system be checked by an authorized Kia dealer.

Use only the specified engine clutch actuator fluid.

(Refer to “Recommended lubricants or capacities” in chapter 8.)

Never mix different types of fluid.

✻ NOTICE - Loss of engine clutch actuator fluid

In the event the engine clutch actuator requires frequent additions of fluid, we recommend that the system be inspected by an authorized Kia dealer.

⚠ WARNING - Engine clutch actuator fluid

When changing and adding engine clutch actuator fluid, handle it carefully. Do not let it come in contact with your eyes. If engine clutch actuator fluid should come in contact with your eyes, immediately flush them with a large quantity of fresh water, and seek medical attention as soon as possible.

⚠ **CAUTION**

Do not allow engine clutch actuator fluid to contact the vehicle's body paint, as paint damage will result. The engine clutch actuator fluid that has been exposed to open air for an extended time should never be used as its quality cannot be guaranteed. It should be properly disposed. Do not put in the wrong kind of fluid. A few drops of mineral-based oil, such as engine oil, in your engine clutch actuator system can damage engine clutch actuator system parts.

WASHER FLUID

Checking the washer fluid level

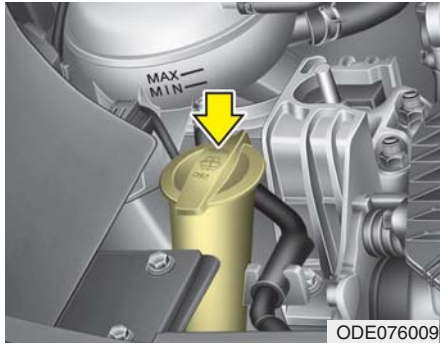

The reservoir is translucent so that you can check the level with a quick visual inspection.

Check the fluid level in the washer fluid reservoir and add fluid if necessary. Plain water may be used if washer fluid is not available. However, use washer solvent with antifreeze characteristics in cold climates to prevent freezing.

⚠ WARNING - Flammable fluid

Do not allow the washer fluid to come in contact with open flames or sparks. The windshield washer fluid reservoir is flammable under certain circumstances. This can result in a fire.

⚠ WARNING - Coolant

- **Do not use radiator coolant or antifreeze in the washer fluid reservoir.**
- **Radiator coolant can severely obscure visibility when sprayed on the windshield and may cause loss of vehicle control.**

⚠ WARNING - Windshield fluid

Do not drink the windshield washer fluid. The windshield washer fluid is poisonous to humans and animals.

PARKING BRAKE

Checking the parking brake (if equipped)

OJF055017

Check whether the stroke is within specification when the parking brake pedal is depressed with 66 lb, 294 N (30 kg) of force. Also, the parking brake alone should securely hold the vehicle on a fairly steep grade. If the stroke is more or less than specified, have the parking brake adjusted by an authorized Kia dealer.

Stroke : 6~7 notch

AIR CLEANER

Filter replacement

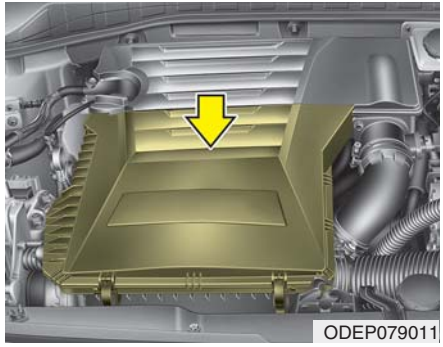

The filter must be replaced when necessary, and should not be washed.

You can clean the filter when inspecting the air cleaner element.

Clean the filter by using compressed air.

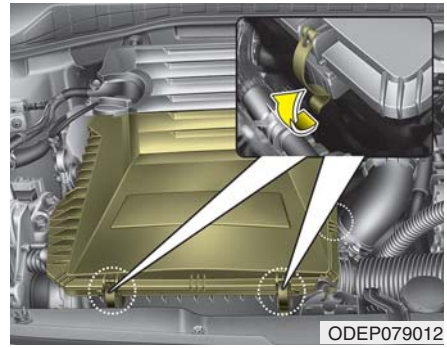

1. Loosen the air cleaner cover attaching clips and open the cover.

2. Wipe the inside of the air cleaner.
3. Replace the air cleaner filter.
4. Lock the cover with the cover attaching clips.

Replace the filter according to the Maintenance Schedule.

If the vehicle is operated in extremely dusty or sandy areas, replace the element more often than the usual recommended intervals. (Refer to "Maintenance under severe usage conditions" in this chapter.)

⚠ CAUTION - Air filter maintenance

- ***Do not drive with the air cleaner removed; this will result in excessive engine wear.***
- ***When removing the air cleaner filter, be careful that dust or dirt does not enter the air intake, or damage may result.***
- ***Use a Kia genuine part. Use of a non-genuine part could damage the air flow sensor.***

CLIMATE CONTROL AIR FILTER (IF EQUIPPED)

Filter inspection

The climate control air filter should be replaced according to the Maintenance Schedule. If the vehicle is operated in severely air-polluted cities or on dusty rough roads for a long period, it should be inspected more frequently and replaced earlier. When you replace the climate control air filter, replace it performing the following procedure, and be careful to avoid damaging other components.

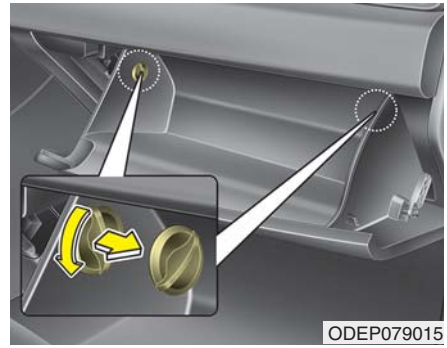

1. Open the glove box and remove the stoppers on both sides.

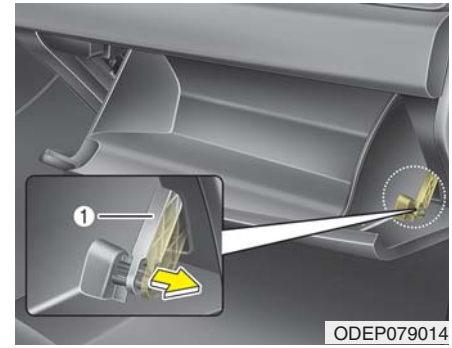

2. With the glove box open, pull the support strap (1).

3. Remove the climate control air filter cover while pressing the lock on both sides of the cover.

4. Replace the climate control air filter.
5. Reassemble in the reverse order of disassembly.

When replacing the climate control air filter install it properly. Otherwise, the system may produce noise and the effectiveness of the filter may be reduced.

WIPER BLADES

Blade inspection

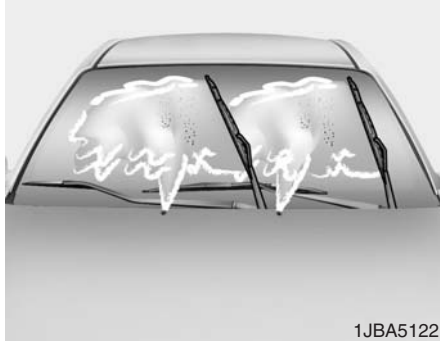

Commercial hot waxes applied by automatic car washes have been known to make the windshield difficult to clean.

Contamination of either the windshield or the wiper blades with foreign matter can reduce the effectiveness of the windshield wipers. Common sources of contamination are insects, tree sap, and hot wax treatments used by some commercial car washes. If the blades are not wiping properly, clean both the window and the blades with a good cleaner or mild detergent, and rinse thoroughly with clean water.

⚠ **CAUTION - Wiper blades**

To prevent damage to the wiper blades, do not use gasoline, kerosene, paint thinner, or other solvents on or near them.

Blade replacement

When the wipers no longer clean adequately, the blades may be worn or cracked, and require replacement.

To prevent damage to the wiper arms or other components, do not attempt to move the wipers manually.

The use of a non-specified wiper blade could result in wiper malfunction and failure.

Front windshield wiper blade

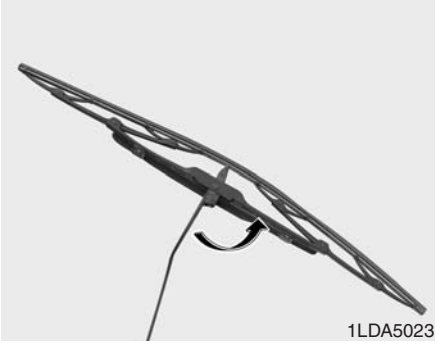

Type A

1. Raise the wiper arm and turn the wiper blade assembly to expose the plastic locking clip.

> ⚠ **CAUTION - Wiper arms**
>
> ***Do not allow the wiper arm to fall against the windshield, since it may chip or crack the windshield.***

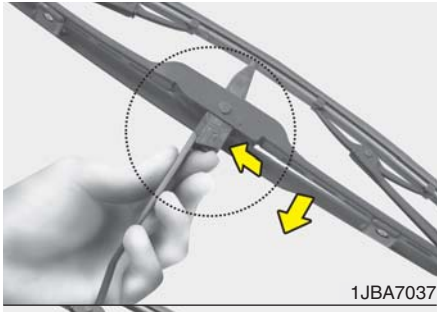

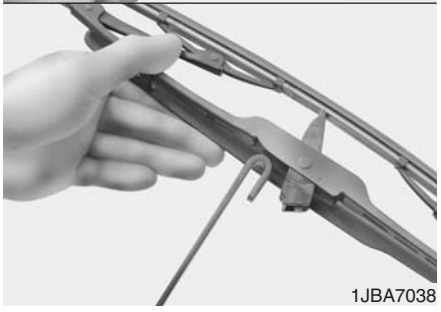

2. Compress the clip and slide the blade assembly downward.
3. Lift it off the arm.
4. Install the blade assembly in the reverse order of removal.

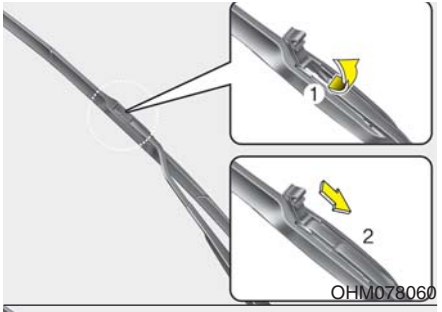

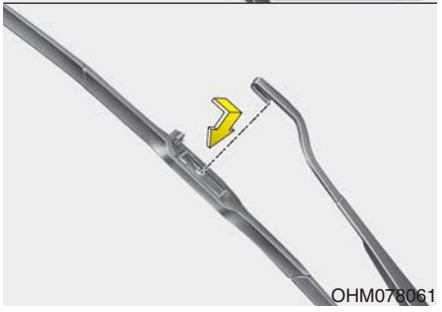

Type B

1. Raise the wiper arm.

2. Lift up the wiper blade clip. Then pull down the blade assembly and remove it.
3. Install the new blade assembly.
4. Return the wiper arm on the windshield.

⚠ **CAUTION - Wiper arms**

Do not allow the wiper arm to fall against the windshield, since it may chip or crack the windshield.

Rear window wiper blade

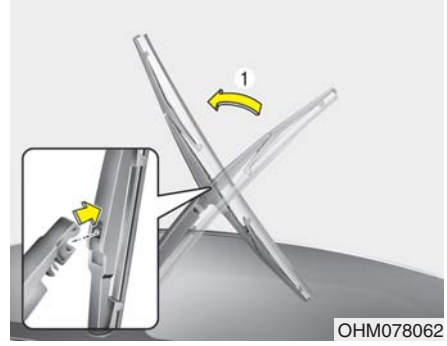

1. Raise the wiper arm and pull out the wiper blade assembly.

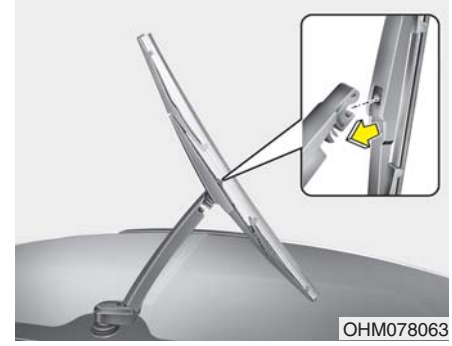

2. Install the new blade assembly by inserting the center part into the slot in the wiper arm until it clicks into place.
3. Make sure the blade assembly is installed firmly by trying to pull it slightly.

To prevent damage to the wiper arms or other components, have an authorized Kia dealer replace the wiper blade.

BATTERY (PLUG-IN HYBRID)

For best battery service

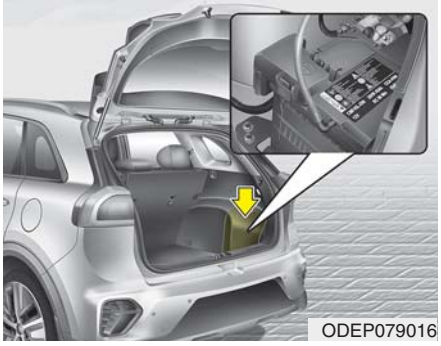

- Keep the battery securely mounted.
- Keep the battery top clean and dry.
- Keep the terminals and connections clean, tight, and coated with petroleum jelly or terminal grease.
- Rinse any spilled electrolyte from the battery immediately with a solution of water and baking soda.
- If the vehicle is not going to be used for an extended time, disconnect the battery cables.

⚠ WARNING - Risk of explosion

Keep lit cigarettes and all other flames or sparks away from the battery.

The battery contains hydrogen -- a highly combustible gas which will explode if it comes in contact with a flame or spark.

Keep batteries out of the reach of children because batteries contain highly corrosive SULFURIC ACID and electrolytes. Do not allow battery acid to contact your skin, eyes, clothing or paint finish.

Wear eye protection when charging or working near a battery. Always provide ventilation when working in an enclosed space.

Always read the following instructions carefully when handling a battery.

If any electrolyte gets into your eyes, flush your eyes with clean water for at least 15 minutes and get immediate medical attention.

If electrolyte gets on your skin, thoroughly wash the contacted area. If you feel pain or burning sensation, get medical attention immediately.

An inappropriately disposed battery can be harmful to the environment and human health. Dispose the battery according to your local law(s) or regulation.

The battery contains lead. Do not dispose of it after use. Please return the battery to an authorized Kia dealer to be recycled.

Never attempt to recharge the battery when the battery cables are connected.

⚠ WARNING - Risk of electrocution

Never touch the electrical ignition system while the vehicle is running. This system works with high voltage which can shock you.

⚠ WARNING - Recharging Battery

Never attempt to recharge the battery when the battery cables are connected.

⚠ WARNING - Battery lead compound

Battery posts, terminals, and related accessories contain lead and lead compounds.

Wash hands after handling.

✻ NOTICE

If you connect unauthorized electronic devices to the battery, the battery may be discharged. Never use unauthorized devices.

Recharging the battery

Your vehicle has a maintenance-free, calcium-based battery.

- If the battery becomes discharged in a short time (because, for example, the headlamps or interior lamps were left on while the vehicle was not in use), recharge it by slow charging (trickle) for 10 hours.
- If the battery gradually discharges because of high electric load while the vehicle is being used, recharge it at 20-30A for two hours.

When recharging the battery, observe the following precautions:

- The battery must be removed from the vehicle and placed in an area with good ventilation.
- Do not allow cigarettes, sparks, or flame near the battery.
- Watch the battery during charging, and stop or reduce the charging rate if the battery cells begin gassing (boiling) violently or if the temperature of the electrolyte of any cell exceeds 49°C (120°F).
- Wear eye protection when checking the battery during charging.
- Disconnect the battery charger in the following order.

1. Turn off the battery charger main switch.
2. Unhook the negative clamp from the negative battery terminal.
3. Unhook the positive clamp from the positive battery terminal.

- Before performing maintenance or recharging the battery, turn off all accessories and stop the engine.
- The negative battery cable must be removed first and installed last when the battery is disconnected.

Reset items

The following items should be reset after the battery has been discharged or the battery has been disconnected.

- Auto up/down window
- Sunroof
- Trip computer
- Climate control system
- Driver position memory system
- Audio

TIRES AND WHEELS

Tire care

For proper maintenance, safety, and maximum fuel economy, you must always maintain recommended tire inflation pressures and stay within the load limits and weight distribution recommended for your vehicle.

Recommended cold tire inflation pressures

All tire pressures (including the spare) should be checked when the tires are cold. “Cold Tires” means the vehicle has not been driven for at least three hours or driven less than 1.6 km (1 mile).

Recommended pressures must be maintained for the best ride, top vehicle handling, and minimum tire wear.

For recommended inflation pressure refer to “Tires and wheels” in chapter 8.

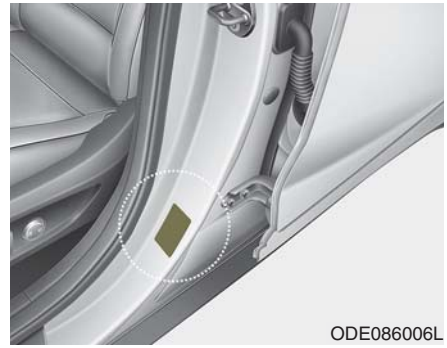

All specifications (sizes and pressures) can be found on a label attached to the driver’s side center pillar.

⚠ WARNING - Tire underinflation

Inflate your tires consistent with the instructions provided in this manual. Severe underinflation (70 kPa (10 psi) or more) can lead to severe heat build-up, causing blowouts, tread separation and other tire failures that can result in the loss of vehicle control. This risk is much higher on hot days and when driving for long periods at high speeds.

- Underinflation also results in excessive wear, poor handling and reduced fuel economy. Wheel deformation also is possible. Keep your tire pressures at the proper levels. If a tire frequently needs refilling, have it checked by an authorized Kia dealer.
- Overinflation produces a harsh ride, excessive wear at the center of the tire tread, and a greater possibility of damage from road hazards.
- Warm tires normally exceed recommended cold tire pressures by 28 to 41 kPa (4 to 6 psi). Do not release air from warm tires to adjust the pressure or the tires will be underinflated.
- Be sure to reinstall the tire inflation valve caps. Without the valve cap, dirt or moisture could get into the valve core and cause air leakage. If a valve cap is missing, install a new one as soon as possible.

Tire pressure

Always observe the following:

- Check tire pressure when the tires are cold. (After vehicle has been parked for at least three hours or hasn't been driven more than 1.6 km (1 mile) since startup.)
- Check the pressure of your spare tire each time you check the pressure of other tires.
- Never overload your vehicle. Be careful not to overload a vehicle luggage rack if your vehicle is equipped with one.

⚠ WARNING - Tire Inflation

Overinflation or underinflation can reduce tire life, adversely affect vehicle handling, and lead to sudden tire failure. This could result in loss of vehicle control and potential injury.

Checking tire inflation pressure

Check your tires once a month or more.

Also, check the tire pressure of the spare tire.

How to check

Use a good quality gauge to check tire pressure. You cannot tell if your tires are properly inflated simply by looking at them. Radial tires may look properly inflated even when they're underinflated.

Check the tire's inflation pressure when the tires are cold. - "Cold" means your vehicle has been sitting for at least three hours or driven no more than 1.6 km (1 mile).

Remove the valve cap from the tire valve stem. Press the tire gauge firmly onto the valve to get a pressure measurement. If the cold tire inflation pressure matches the recommended pressure on the tire and loading information label, no further adjustment is necessary. If the pressure is low, add air until you reach the recommended amount.

If you overfill the tire, release air by pushing on the metal stem in the center of the tire valve. Recheck the tire pressure with the tire gauge. Be sure to put the valve caps back on the valve stems. They help prevent leaks by keeping out dirt and moisture.

- Inspect your tires frequently for proper inflation as well as wear and damage. Always use a tire pressure gauge.
- Tires with too much or too little pressure wear unevenly causing poor handling, loss of vehicle control, and sudden tire failure leading to accidents, injuries, and even death. The recommended cold tire pressure for your vehicle can be found in this manual and on the tire label located on the driver's side center pillar.
- Remember to check the pressure of your spare tire. Kia recommends that you check the spare every time you check the pressure of the other tires on your vehicle.

Tire rotation

To equalize tread wear, it is recommended that the tires be rotated every 12,000 km (7,500 miles) or sooner if irregular wear develops.

During rotation, check the tires for correct balance.

When rotating tires, check for uneven wear and damage. Abnormal wear is usually caused by incorrect tire pressure, improper wheel alignment, out-of-balance wheels, severe braking or severe cornering. Look for bumps or bulges in the tread or side of tire. Replace the tire if you find either of these conditions. Replace the tire if fabric or cord is visible. After rotation, be sure to bring the front and rear tire pressures to specification and check lug nut tightness.

Refer to “Tires and wheels” in chapter 8.

Without a spare tire

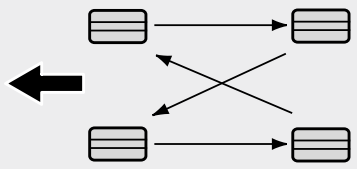

S2BLA790A

Directional tires (if equipped)

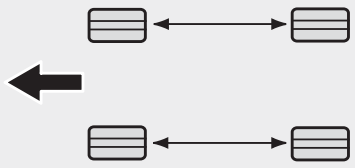

CBGQ0707A

Disc brake pads should be inspected for wear whenever tires are rotated.

Rotate radial tires that have an asymmetric tread pattern only from front to rear and not from right to left.

⚠ WARNING - Mixing tires

- **Do not use the compact spare tire (if equipped) for tire rotation.**
- **Do not mix bias ply and radial ply tires under any circumstances. This may cause unusual handling characteristics.**

Wheel alignment and tire balance

The wheels on your vehicle were aligned and balanced carefully at the factory to give you the longest tire life and best overall performance.

In most cases, you will not need to have your wheels aligned again. However, if you notice unusual tire wear or your vehicle pulling one way or the other, the alignment may need to be reset.

If you notice your vehicle vibrating when driving on a smooth road, your wheels may need to be rebalanced.

⚠ CAUTION - Wheel weight

Improper wheel weights can damage your vehicle's aluminum wheels. Use only approved wheel weights.

Tire replacement

If the tire is worn evenly, a tread wear Indicator (A) will appear as a solid band across the tread. This shows there is less than 1.6 mm (1/16 inch) of tread left on the tire. Replace the tire when this happens.

Do not wait for the band to appear across the entire tread before replacing the tire.

The ABS works by comparing the speed of the wheels. The tire size affects wheel speed. When replacing tires, all 4 tires must use the same size originally supplied with the vehicle. Using tires of a different size can cause the ABS (Anti-lock Brake System) and ESC (Electronic Stability Control) to work irregularly.

✻ NOTICE

- **We recommend that when replacing tires, use the same which were originally supplied with the vehicle. If not, driving performance could be altered.**
- **When replacing tires (or wheels), it is recommended to replace the two front or two rear tires (or wheels) as a pair.**
  Replacing just one tire can seriously affect your vehicle's handling.

Wheel replacement

When replacing the metal wheels for any reason, make sure the new wheels are equivalent to the original factory units in diameter, rim width and offset.

A wheel that is not the correct size may adversely affect wheel and bearing life, braking and stopping abilities, handling characteristics, ground clearance, body-to-tire clearance, snow chain clearance, speedometer and odometer calibration, headlight aim and bumper height.

⚠ **CAUTION - Wheel**

Wheels that do not meet Kia's specifications may fit poorly and result in damage to the vehicle or unusual handling and poor vehicle control.

Tire traction

Tire traction can be reduced if you drive on worn tires, tires that are improperly inflated or on slippery road surfaces. Tires should be replaced when tread wear indicators appear. Slow down whenever there is rain, snow or ice on the road, to reduce the possibility of losing control of the vehicle.

Tire maintenance

In addition to proper inflation, correct wheel alignment helps to decrease tire wear. If you find a tire is worn unevenly, have your dealer check the wheel alignment.

When you have new tires installed, make sure they are balanced. This will increase vehicle ride comfort and tire life. Additionally, a tire should always be rebalanced if it is removed from the wheel.

Tire sidewall labeling

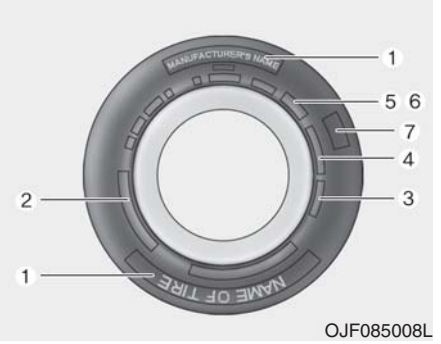

OJF085008L

This information identifies and describes the fundamental characteristics of the tire and also provides the tire identification number (TIN) for safety standard certification. The TIN can be used to identify the tire in case of a recall.

1. Manufacturer or brand name

Manufacturer or Brand name is shown.

2. Tire size designation

A tire's sidewall is marked with a tire size designation. You will need this information when selecting replacement tires for your car. The following explains what the letters and numbers in the tire size designation mean.

Example tire size designation:

(These numbers are provided as an example only; your tire size designator could vary depending on your vehicle.)

P205/55R16 89H

P - Applicable vehicle type (tires marked with the prefix "P" are intended for use on passenger vehicles or light trucks; however, not all tires have this marking).

205 - Tire width in millimeters.

55 - Aspect ratio. The tire's section height as a percentage of its width.

R - Tire construction code (Radial).

16 - Rim diameter in inches.

89 - Load Index, a numerical code associated with the maximum load the tire can carry.

H - Speed Rating Symbol. See the speed rating chart in this section for additional information.

Wheel size designation

Wheels are also marked with important information that you need if you ever have to replace one. The following explains what the letters and numbers in the wheel size designation mean.

Example wheel size designation:

6.0JX16

6.0 - Rim width in inches.

J - Rim contour designation.

16 - Rim diameter in inches.

Tire speed ratings

The chart below lists many of the different speed ratings currently being used for passenger vehicles. The speed rating is part of the tire size designation on the sidewall of the tire. This symbol corresponds to that tire's designed maximum safe operating speed.

Speed Rating Symbol	Maximum Speed
S	180 km/h (112 mph)
T	190 km/h (118 mph)
H	210 km/h (130 mph)
V	240 km/h (149 mph)
Z	Above 240 km/h (149 mph)

3. Checking tire life (TIN : Tire Identification Number)

Any tires that are over 6 years old, based on the manufacturing date, (including the spare tire) should be replaced by new ones. You can find the manufacturing date on the tire sidewall (possibly on the inside of the wheel), displaying the DOT Code. The DOT Code is a series of numbers on a tire consisting of numbers and English letters. The manufacturing date is designated by the last four digits (characters) of the DOT code.

DOT : XXXX XXXX OOOO

The front part of the DOT means a plant code number, tire size and tread pattern and the last four numbers indicate week and year manufactured.

For example:

DOT XXXX XXXX 1620 represents that the tire was produced in the 16th week of 2020.

⚠ WARNING - Tire age

Replace tires within the recommended time frame. Failure to replace tires as recommended can result in sudden tire failure, which could lead to a loss of control and an accident.

4. Tire ply composition and material

The number of layers or plies of rubber-coated fabric in the tire. Tire manufacturers also must indicate the materials in the tire, which include steel, nylon, polyester, and others. The letter "R" means radial ply construction; the letter "D" means diagonal or bias ply construction; and the letter "B" means belted-bias ply construction.

5. Maximum permissible inflation pressure

This number is the greatest amount of air pressure that should be put in the tire. Do not exceed the maximum permissible inflation pressure. Refer to the Tire and Loading Information label for recommended inflation pressure.

6. Maximum load rating

This number indicates the maximum load in kilograms and pounds that can be carried by the tire. When replacing the tires on the vehicle, always use a tire that has the same load rating as the factory installed tire.

7. Uniform Tire Quality Grading

Quality grades can be found where applicable on the tire sidewall between tread shoulder and maximum section width.

For example:

Treadwear 200

Traction AA

Temperature A

Tread wear

The tread wear grade is a comparative rating based on the wear rate of the tire when tested under controlled conditions on a specified government test course. For example, a tire graded 150 would wear one-and-a-half times (1½) as well on the government course as a tire graded 100.

The relative performance of tires depends upon the actual conditions of their use, however, and may depart significantly from the norm due to variations in driving habits, service practices and differences in road characteristics and climate.

Tires degrade over time, even when they are not being used. Regardless of the remaining tread, we recommend that tires be replaced after approximately six (6) years of normal service. Heat caused by hot climates or frequent high loading conditions can accelerate the aging process.

These grades are molded on the side-walls of passenger vehicle tires. The tires available as standard or optional equipment on your vehicles may vary with respect to grade.

Traction - AA, A, B & C

The traction grades, from highest to lowest, are AA, A, B and C. Those grades represent the tires ability to stop on wet pavement as measured under controlled conditions on specified government test surfaces of asphalt and concrete. A tire marked C may have poor traction performance.

The traction grade assigned to this tire is based on straight-ahead braking traction tests, and does not include acceleration, cornering, hydroplaning, or peak traction characteristics.

Temperature -A, B & C

The temperature grades are A (the highest), B and C representing the tire's resistance to the generation of heat and its ability to dissipate heat when tested under controlled conditions on a specified indoor laboratory test wheel.

Sustained high temperature can cause the material of the tire to degenerate and reduce tire life, and excessive temperature can lead to sudden tire failure. Grades B and A represent higher levels of performance on the laboratory test wheel than the minimum required by law.

Tire terminology and definitions

Air Pressure: The amount of air inside the tire pressing outward on the tire. Air pressure is expressed in kilopascal (kPa) or pounds per square inch (psi).

Accessory Weight: This means the combined weight of optional accessories. Some examples of optional accessories are, dual clutch transmission, power seats, and air conditioning.

Aspect Ratio: The relationship of a tire's height to its width.

Belt: A rubber coated layer of cords that is located between the plies and the tread. Cords may be made from steel or other reinforcing materials.

Bead: The tire bead contains steel wires wrapped by steel cords that hold the tire onto the rim.

Bias Ply Tire: A pneumatic tire in which the plies are laid at alternate angles less than 90 degrees to the centerline of the tread.

Cold Tire Pressure: The amount of air pressure in a tire, measured in kilopascals (kPa) or pounds per square inch (psi) before a tire has built up heat from driving.

Curb Weight: This means the weight of a motor vehicle with standard and optional equipment including the maximum capacity of fuel, oil and coolant, but without passengers and cargo.

DOT Markings: The DOT code includes the Tire Identification Number (TIN), an alphanumeric designator which can also identify the tire manufacturer, production plant, brand and date of production.

GVWR: Gross Vehicle Weight Rating

GAWR FRT: Gross Axle Weight Rating for the Front Axle.

GAWR RR: Gross Axle Weight Rating for the Rear axle.

Intended Outboard Sidewall: The side of an asymmetrical tire, that must always face outward when mounted on a vehicle.

Kilopascal (kPa): The metric unit for air pressure.

Light truck(LT) tire: A tire designated by its manufacturer as primarily intended for use on lightweight trucks or multipurpose passenger vehicles.

Load Index: An assigned number ranging from 1 to 279 that corresponds to the load carrying capacity of a tire.

Load ratings: The maximum load that a tire is rated to carry for a given inflation pressure.

Maximum Inflation Pressure: The maximum air pressure to which a cold tire may be inflated. The maximum air pressure is molded onto the sidewall.

Maximum Load Rating: The load rating for a tire at the maximum permissible inflation pressure for that tire.

Maximum Loaded Vehicle Weight: The sum of curb weight; accessory weight; vehicle capacity weight; and production options weight.

Normal Occupant Weight: The number of occupants a vehicle is designed to seat multiplied by 68 kg (150 lbs.).

Occupant Distribution: Designated seating positions.

Outward Facing Sidewall: The side of a asymmetrical tire that has a particular side that faces outward when mounted on a vehicle. The outward facing sidewall bears white lettering or bears manufacturer, brand, and/or model name molding that is higher or deeper than the same moldings on the inner facing sidewall.

Passenger (P-Metric) Tire: A tire used on passenger cars and some light duty trucks and multipurpose vehicles.

Ply: A layer of rubber-coated parallel cords

Pneumatic tire: A mechanical device made of rubber, chemicals, fabric and steel or other materials, that, when mounted on an automotive wheel, provides the traction and contains the gas or fluid that sustains the load.

Production options weight: The combined weight of installed regular production options weighing over 2.3 kg (5 lbs.) in excess of the standard items which they replace, not previously considered in curb weight or accessory weight, including heavy duty brakes, ride levelers, roof rack, heavy duty battery, and special trim.

Recommended Inflation Pressure: Vehicle manufacturer's recommended tire inflation pressure and shown on the tire placard.

Radial Ply Tire: A pneumatic tire in which the ply cords that extend to the beads are laid at 90 degrees to the centerline of the tread.

Rim: A metal support for a tire and upon which the tire beads are seated.

Sidewall: The portion of a tire between the tread and the bead.

Speed Rating: An alphanumeric code assigned to a tire indicating the maximum speed at which a tire can operate.

Traction: The friction between the tire and the road surface. The amount of grip provided.

Tread: The portion of a tire that comes into contact with the road.

Treadwear Indicators: Narrow bands, sometimes called "wear bars," that show across the tread of a tire when only 1/16 inch of tread remains.

UTQGS: Uniform Tire Quality Grading Standards, a tire information system that provides consumers with ratings for a tire's traction, temperature and treadwear. Ratings are determined by tire manufacturers using government testing procedures. The ratings are molded into the sidewall of the tire.

Vehicle Capacity Weight: The number of designated seating positions multiplied by 68 kg (150 lbs.) plus the rated cargo and luggage load.

Vehicle Maximum Load on the Tire: Load on an individual tire due to curb and accessory weight plus maximum occupant and cargo weight.

Vehicle Normal Load on the Tire: Load on an individual tire that is determined by distributing to each axle its share of the curb weight, accessory weight, and normal occupant weight and driving by 2.

Vehicle Placard: A label permanently attached to a vehicle showing the original equipment tire size and recommended inflation pressure.

All season tires

Kia specifies all season tires on some models to provide good performance for use all year round, including snowy and icy road conditions. All season tires are identified by ALL SEASON and/or M+S (Mud and Snow) on the tire sidewall. Snow tires have better snow traction than all season tires and may be more appropriate in some areas.

Summer tires

Kia specifies summer tires on some models to provide superior performance on dry roads. Summer tire performance is substantially reduced in snow and ice. Summer tires do not have the tire traction rating M+S (Mud and Snow) on the tire side wall. If you plan to operate your vehicle in snowy or icy conditions, Kia recommends the use of snow tires or all season tires on all four wheels.

⚠ WARNING

Do not use summer tires at temperatures below 7°C (45°F) or when driving on snow or ice. At temperatures below 7°C (45°F), summer tires can lose elasticity, and therefore traction and braking power as well. Change the tires on your vehicle to winter or all-weather tires of the same size as the standard tires of the vehicle. Both types of tires are identified by the M+S (Mud and Snow) marking. Using summer tires at very cold temperatures could cause cracks to form, thereby damaging the tires permanently.

Snow tires

If you equip your car with snow tires, they should be the same size and have the same load capacity as the original tires. Snow tires should be installed on all four wheels; otherwise, poor handling may result.

Snow tires should carry 28 kPa (4 psi) more air pressure than the pressure recommended for the standard tires on the tire label on the driver's side of the center pillar, or up to the maximum pressure shown on the tire sidewall, whichever is less.

Do not drive faster than 120 km/h (75 mph) when your vehicle is equipped with snow tires.

Radial-ply tires

Radial-ply tires provide improved tread life, road hazard resistance and smoother high speed ride. The radial-ply tires used on this vehicle are of belted construction and are selected to complement the ride and handling characteristics of your vehicle.

Radial-ply tires have the same load carrying capacity as bias-ply or bias belted tires of the same size and use the same recommended inflation pressure. Mixing of radial-ply tires with bias-ply or bias belted tires is not recommended. Any combinations of radial-ply and bias-ply or bias belted tires when used on the same vehicle will seriously deteriorate vehicle handling. The best rule to follow is: identical radial-ply tires should always be used as a set of four.

Longer wearing tires can be more susceptible to irregular tread wear. It is very important to follow the tire rotation interval shown in this section to achieve the tread life potential of these tires. Cuts and punctures in radial-ply tires are repairable only in the tread area, because of sidewall flexing. Consult your tire dealer for radial-ply tire repairs.

Low aspect ratio tire (if equipped)

Low aspect ratio tires, whose aspect ratio is lower than 50, are provided for sporty looks.

Because the low aspect ratio tires are optimized for handling and braking, it may be more uncomfortable to ride in and there is more noise compare with normal tires.

⚠ CAUTION

Because the sidewall of the low aspect ratio tire is shorter than the normal, the wheel and tire of the low aspect ratio tire is easier to be damaged. So, follow the instructions below.

- ***When driving on a rough road or off road, drive cautiously because tires and wheels may be damaged. And after driving, inspect tires and wheels.***
- ***When passing over a pothole, speed bump, manhole, or curb stone, drive slowly so that the tires and wheels are not damaged.***
- ***If the tire is impacted, we recommend that you inspect the tire condition or contact an authorized Kia dealer.***
- ***To prevent damage to the tire, inspect the tire condition and pressure every 3,000 km (1,900 miles).***

- It is not easy to recognize the tire damage with your own eyes. But if there is the slightest hint of tire damage, even though you cannot see it, have the tire checked or replaced because the tire damage may cause air leakage from the tire.
- If the tire is damaged by driving on a rough road, off road, pothole, manhole, or curb stone, it will not be covered by the warranty.
- You can find out the tire information on the tire sidewall.

FUSES

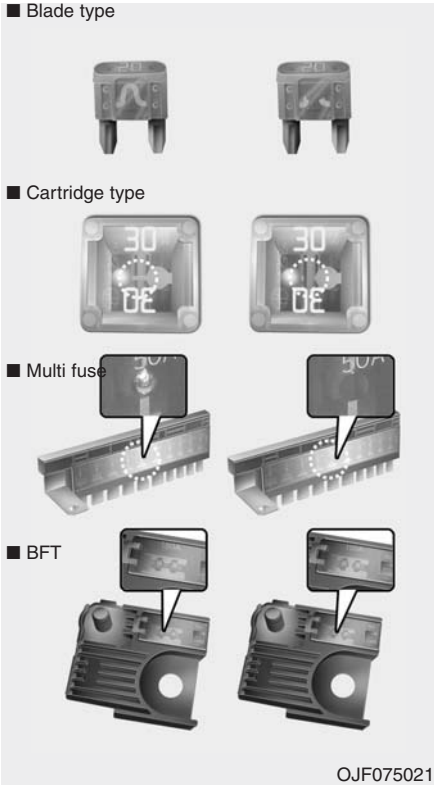

❊ Left side : Normal , Right side : Blown

A vehicle's electrical system is protected from electrical overload damage by fuses.

This vehicle has 2 (or 3) fuse panels, one located in the driver's side panel bolster, the other in the engine compartment near the battery.

If any of your vehicle's lights, accessories, or controls do not work, check the appropriate circuit fuse. If a fuse has blown, the element inside the fuse will melt.

If the electrical system does not work, first check the driver's side fuse panel.

Always replace a blown fuse with one of the same rating.

If the replacement fuse blows, this indicates an electrical problem. Avoid using the system involved and immediately consult an authorized Kia dealer.

Three kinds of fuses are used: blade type for lower amperage rating, cartridge type, and multi fuse for higher amperage ratings.

⚠ WARNING - Fuse replacement

- **Never replace a fuse with anything but another fuse of the same rating.**
- **A higher capacity fuse could cause damage and possibly a fire.**
- **Never install a wire or aluminum foil instead of the proper fuse - even as a temporary repair. It may cause extensive wiring damage and a possible fire.**

- Do not arbitrarily modify or add-on electric wiring to the vehicle.

⚠ CAUTION

Do not use a screwdriver or any other metal object to remove fuses because it may cause a short circuit and damage the system.

✻ NOTICE

- When replacing fuse, turn the ignition "OFF" and turn off switches of all electrical devices then remove battery (-) terminal.
- The actual fuse/relay panel label may differ from equipped items.

⚠ WARNING - Electrical Fire

Always ensure replacements fuses and relays are securely fastened when installed. Failure to do so can result in a vehicle fire.

Inner panel fuse replacement

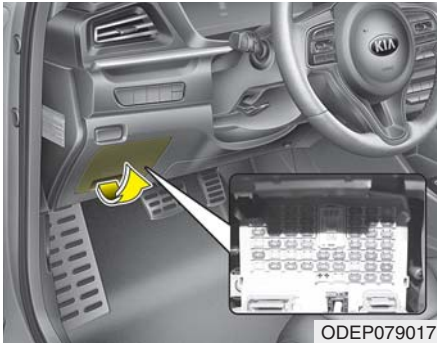

ODEP079017

1. Turn the engine start/stop button to the OFF position and all other switches off.
2. Open the fuse panel cover.

If the switch is located in the "OFF" position, a caution indicator will be displayed in the cluster.

⚠ CAUTION

- *When replacing a blown fuse or relay, make sure the new fuse or relay fits tightly into the clips. Failure to tightly install the fuse or relay may cause damage to the wiring and electric systems.*
- *Do not remove fuses, relays and terminals fastened with bolts or nuts. The fuses, relays and terminals may not be fastened correctly which may cause vehicle damage.*

⚠ CAUTION

- ***Do not input any other objects except fuses or relays into fuse/relay terminals, such as a driver or wiring. It may cause contact failure and system malfunction.***
- ***Do not plug in screwdrivers or aftermarket wiring into the terminal originally designed for fuse and relays only. The electrical system and wiring of the vehicle interior may be damaged or burned due to contact failure.***
- ***If you directly connect the wire on the taillight or replace the bulb which is over the regulated capacity to install trailers, etc., the inner junction block can get burned.***

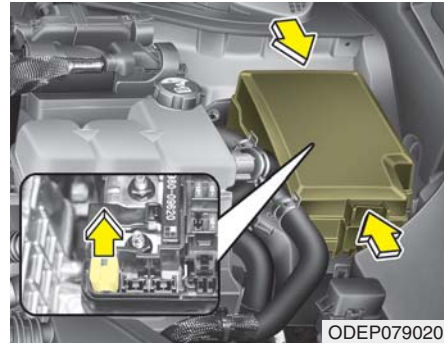
ODEP079020

3. Pull the suspected fuse straight out. Use the removal tool provided on the engine compartment fuse panel cover.
4. Check the removed fuse; replace it if it is blown.

   Spare fuses are provided in the engine compartment fuse panel.
5. Push in a new fuse of the same rating, and make sure it fits tightly in the clips.

If it fits loosely, consult an authorized Kia dealer.

If you do not have a spare, use a fuse of the same rating from a circuit you may not need for operating the vehicle, such as the power outlet fuse.

If the head lamp, turn signal lamp, stop signal lamp, fog lamp, DRL, tail lamp, HMSL do not work and the fuses are OK, check the fuse panel in the engine compartment. If a fuse is blown, it must be replaced.

✻ NOTICE

If the headlamp, fog lamp, turn signal lamp, or tail lamp malfunction even without any problem to the lamps, have the vehicle checked by an authorized Kia dealer for assistance.

⚠ **CAUTION - Fuse Panel Covers**

- ***Set all switches to ON before driving.***
- ***If the vehicle is going to be unused for over 1 month, set all switches to OFF to prevent the batteries from draining.***
- ***The contact points of the switches may wear out with excessive use. Please refrain from excessive use of the switches (except for long-term parking for over 1 month).***

Fuse switch

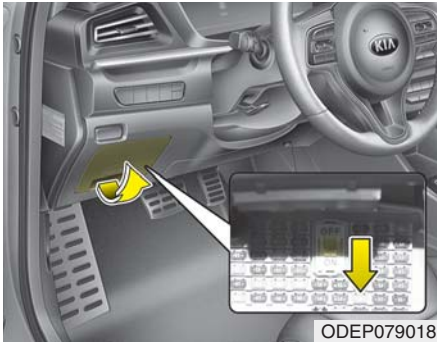

ODEP079018

Always set the fuse switch to the ON position before using the vehicle.

If you move the switch to the OFF position, some items such as audio and digital clock must be reset and transmitter (or smart key) may not work properly. When the switch is Off, the caution indicator will be displayed on the instrument cluster.

Always place the fuse switch in the ON position while driving the vehicle.

If the switch is located in the “OFF” position, a caution indicator will be displayed in the cluster.

Engine compartment fuse replacement

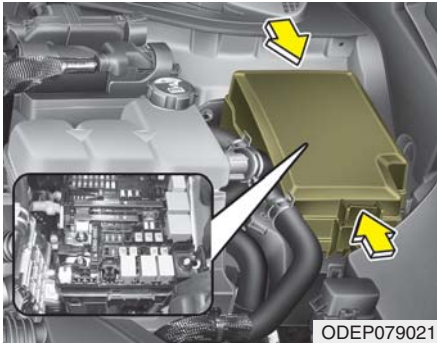
ODEP079021

1. Turn the engine start/stop button to the OFF position and all other switches off.
2. Remove the fuse panel cover by pressing the tab and pulling the cover up. When the blade type fuse is disconnected, remove it by using the clip designed for changing fuses located in the engine compartment fuse box. Upon removal, securely insert reserve fuse of the same rating.

3. Check the removed fuse; replace it if it is blown. To remove or insert the fuse, use the fuse puller in the engine compartment fuse panel.
4. Push in a new fuse of the same rating, and make sure it fits tightly in the clips. If it fits loosely, consult an authorized Kia dealer.

⚠ CAUTION

After checking the fuse panel in the engine compartment, securely install the fuse panel cover to protect against any electrical failure which may occur from water contact. Listen for the audible clicking sound to ensure the fuse panel cover is securely fastened.

Multi fuse

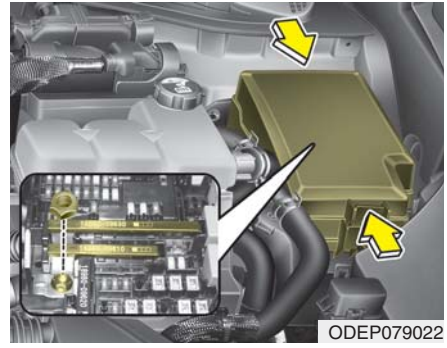
ODEP079022

If the multi fuse is blown, it must be removed as follows:

1. Turn off the engine.
2. Disconnect the negative battery cable.
3. Remove the nuts shown in the picture above.
4. Replace the fuse with a new one of the same rating.
5. Reverse these steps to reinstall the multi fuse.

✻ NOTICE

Do not disassemble nor assemble the multi fuse when it is secured with nuts and bolts. Incorrect or partial assembly torque may cause a fire. Have the vehicle checked by an authorized Kia dealer.

Main fuse (Plug-in Hybrid)

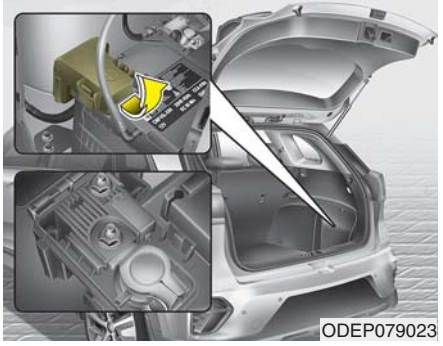

If the multi fuse is blown, it must be removed as follows:

1. Turn off the engine.
2. Disconnect the negative battery cable.
3. Remove the nuts shown in the picture above.
4. Replace the fuse with a new one of the same rating.
5. Reverse these steps to reinstall the multi fuse.

✻ NOTICE

The electronic system may not function correctly even when the engine compartment and internal fuse box's individual fuses are not disconnected. In such case the cause of the problem may be disconnection of the main fuse (BFT type), which is located inside the positive battery terminal (+) cap.
Since the main fuse is designed more intricately than other parts, have the vehicle checked by an authorized Kia dealer.

⚠ CAUTION

Visually inspect the battery cap to ensure it is securely closed. If the battery cap is not securely closed, moisture may enter the system and damage the electrical components.

⚠ WARNING - Random wiring prohibited when retrofitting equipment

Use of random wiring in the vehicle might cause danger due to failure and damage of the vehicle's performance.

Using random wires especially when retrofitting AVN or theft alarm system, remote engine control, car phone or radio might damage the vehicle or cause fire.

✻ NOTICE - Remodeling Prohibited

Do not rewire your vehicle in any way as doing so may affect the performance of several safety features in your vehicle. Rewiring your vehicle may also void your warranty and cause you to be responsible for any subsequent vehicle damage which may result.

Fuse/relay panel description

Driver's side fuse panel

Inside the fuse/relay panel covers, you can find the fuse/relay label describing fuse/relay name and capacity.

■ Driver's side fuse panel (Hybrid)

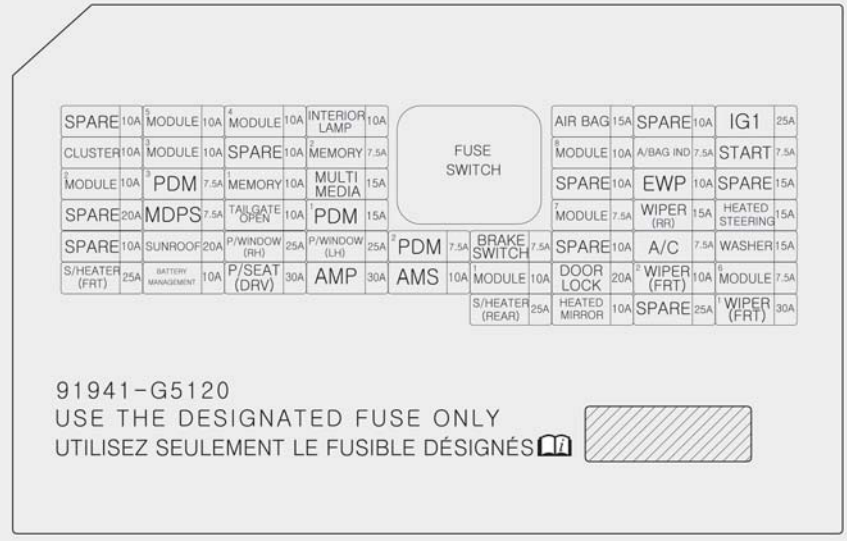

ODEP079117N

✻ NOTICE

Not all fuse panel descriptions in this manual may be applicable to your vehicle. It is accurate at the time of printing. When you inspect the fuse panel in your vehicle, refer to the fuse panel label.

Driver's side fuse panel

Inside the fuse/relay panel covers, you can find the fuse/relay label describing fuse/relay name and capacity.

✻ NOTICE

Not all fuse panel descriptions in this manual may be applicable to your vehicle. It is accurate at the time of printing. When you inspect the fuse panel in your vehicle, refer to the fuse panel label.

■ Driver's side fuse panel (Plug-in Hybrid)

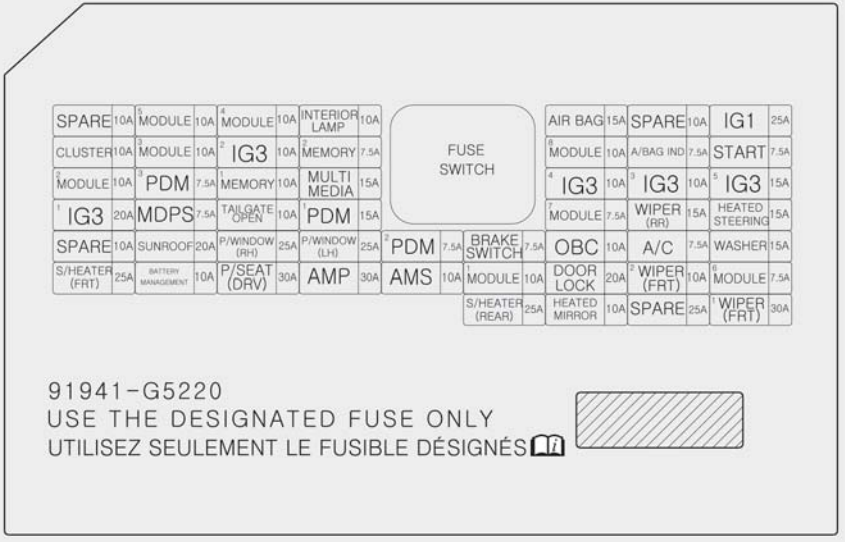

ODEP079118N

Instrument panel (Driver's side fuse panel) (Hybrid)

Fuse Name	Fuse rating	Circuit Protected
MODULE 5	10A	Electro Chromic Mirror, Audio/Video & Navigation Head Unit, Audio, Shift Lever Indicator, Air Conditioner Control Module, Rear Seat Warmer Control Module, Front Air Ventilation Seat Control Module, Front Seat Warmer Control Module, Head Lamp Leveling Device Actuator LH/RH, Crash Pad Switch, AMP (Amplifier)
MODULE 4	10A	Lane Keeping Assist Control Module, Crash Pad Switch, Blind-Spot Collision Warning (BCW) Radar Left Handle side/Right Handle side, EPB, VESS, Front Seat Warmer Control Module
INTERIOR LAMP	10A	Front Vanity Lamp LH/RH, Room Lamp, Overhead Console Lamp, Luggage Lamp, Mood Lamp, BCM, Wireless Charger
A/BAG	15A	Passenger Occupant Detection Sensor, ACU
IG 1	25A	Engine Room Junction Block (Fuse - DCT4, HPCU2, ACTIVE HYDRAULIC BOOSTER3, ECU3)
CLUSTER	10A	Instrument Cluster
MODULE 3	10A	BCM (Body Control Module), DCT (Dual Clutch Transmission) Shift Lever, Stop Lamp Switch, Driver Door Module, Passenger Door Module
MEMORY 2	7.5A	Active Air Flap Unit, VESS
MODULE 8	10A	Active Air Flap Unit, Electric Water Pump (Engine), Engine Room Junction Block (Battery C/Fan Relay), BMS (Battery Management System) Control Module
A/BAG IND	7.5A	Air Conditioner Control Module, Instrument Cluster
START	7.5A	[With Smart Key/With Immobilizer] Inhibitor Switch

Fuse Name	Fuse rating	Circuit Protected
MODULE 2	10A	Engine Room Junction Block (Power Outlet Relay), Wireless Charger, BCM (Body Control Module), USB Charger, Smart Key Control Module, Audio, BMS (Battery Management System) Control Module, Audio/Video & Navigation Head Unit, Driver Power Outside Mirror Switch, AMP (Amplifier)
PDM 3	7.5A	[Without Smart Key] Immobilizer Module [With Smart Key] Smart Key Control Module
MEMORY 1	10A	Instrument Cluster, Driver IMS (Integrated memory system) Module, BCM (Body Control Module), Air Conditioner Control Module, Auto Light & Photo Sensor, Driver Door Module, Passenger Door Module, ECM (Electric Chromic Mirror)
MULTI MEDIA	15A	Audio, Audio/Video & Navigation Head Unit
EWP	10A	Electric Water Pump (HEV)
MDPS	7.5A	MDPS (Motor Driven Power Steering) Unit
TAIL GATE	10A	Tail Gate Relay, ICM Relay Box (Fuel Filler Door Relay), Fuel Filler Switch
PDM 1	15A	Smart Key Control Module
MODULE 7	7.5A	Front Seat Warmer Control Module, AC Inverter (110V), Front Air Ventilation Seat Control Module, Rear Seat Warmer Module, AC Inverter Module
WIPER (RR)	15A	Engine Room Junction Block (Wiper RR Relay), Rear Wiper Motor
HEATED STEERING	15A	BCM (Body Control Module)
SUNROOF	20A	Sunroof Motor

Fuse Name	Fuse rating	Circuit Protected
P/WINDOW RH	25A	Power Window (RH) Relay, Passenger Safety Power Window Module
P/WINDOW LH	25A	Power Window (LH) Relay, Driver Safety Power Window Module
PDM 2	7.5A	[Without Smart Key] Immobilizer Module [With Smart Key] Smart Key Control Module, Start/Stop Button Switch
BRAKE SWITCH	7.5A	Stop Lamp Switch, Smart Key Control Module
A/CON	7.5A	Air Conditioner Control Module, Electronic Air Conditioner Compressor, Engine Room Junction Block (Blower Relay, PTC Heater1 Relay, PTC Heater2 Relay)
WASHER	15A	Multifunction Switch
S/HEATER (FRT)	25A	Front Seat Warmer Control Module, Front Air Ventilation Seat Control Module
BATTERY MANAGEMENT	10A	BMS (Battery Management System) Control Module
P/SEAT (DRV)	30A	[Without IMS] Driver Seat Manual Switch [With IMS] Driver Seat Manual Switch, Driver IMS (Integrated memory system) Module
AMP	30A	AMP (Amplifier)
AMS	10A	Not Used
MODULE 1	10A	Data Link Connector, Forward Collision-Avoidance Assist (FCA) Module, Hazard Switch, Driver/Passenger Smart Key Outside Handle, Key Interlock, Natural Vacuum Leak Detection, Outside Mirror Folding/Unfolding Relay, Mood Lamp, Outside Mirror Switch

Fuse Name	Fuse rating	Circuit Protected
DOOR LOCK	20A	Door Lock/Unlock Relay, ICM Relay Box (Two Turn Unlock Relay)
WIPER 2 (FRT)	10A	Wiper Motor, Engine Room Junction Block (Front Wiper (Low) Relay), ECM (Engine Control Module), BCM (Body Control Module)
MODULE 6	7.5A	BCM (Body Control Module), Smart Key Control Module
S/HEATER (REAR)	25A	Rear Seat Warmer Control Module
HEATED MIRROR	10A	Driver Power Outside Mirror, Passenger Power Outside Mirror, Air Conditioner Control Module
WIPER1 (FRT)	30A	Wiper Motor, Engine Room Junction Block (Front Wiper (Low) Relay)

Instrument panel (Driver's side fuse panel) (Plug-in Hybrid)

Fuse Name	Fuse rating	Circuit Protected
MODULE 5	10A	Electro Chromic Mirror, Audio/Video & Navigation Head Unit, Audio, VESS (Virtual Engine Sound System) Unit, Air Conditioner Control Module, Rear Seat Warmer Control Module, Front Air Ventilation Seat Control Module, Front Seat Warmer Control Module, Head Lamp Leveling Device Actuator LH/RH, Crash Pad Switch, AMP (Amplifier)
MODULE 4	10A	Lane Keeping Assist Control Module, Crash Pad Switch, Blind-Spot Collision Warning (BCW) Radar Left Handle side/Right Handle side, EPB, VESS, Front Seat Warmer Control Module
INTERIOR LAMP	10A	Front Vanity Lamp LH/RH, Room Lamp, Overhead Console Lamp, Door Warning Switch, Luggage Lamp, Wireless Charger, Mood Lamp, BCM
A/BAG	15A	Passenger Occupant Detection Sensor, ACU
IG 1	25A	Engine Room Junction Block (Fuse - DCT4, HPCU2, ACTIVE HYDRAULIC BOOSTER3)
CLUSTER	10A	Instrument Cluster
MODULE 3	10A	BCM (Body Control Module), DCT (Dual Clutch Transmission) Shift Lever, Stop Lamp Switch, Driver Door Module, Passenger Door Module
IG3 2	10A	Fuel Filler Door & Battery Charger Switch, Instument Cluster, Audio, Charger Indicator, Integrated Gateway Power control Module, Audio/Video & Navigation Head Unit
MEMORY 2	7.5A	Active Air Flap Unit, VESS
MODULE 8	10A	Active Air Flap Unit, Electric Water Pump (Engine)
A/BAG IND	7.5A	Air Conditioner Control Module, Instrument Cluster

Fuse Name	Fuse rating	Circuit Protected
START	7.5A	INHIBITOR SW
MODULE 2	10A	Engine Room Junction Block (Power Outlet Relay), Wireless Charger, BCM (Body Control Module), USB Charger, Smart Key Control Module, Audio, Audio / Video & Navigation Head Unit, Power Outside Mirror Switch, AMP (Amplifier)
PDM3	7.5A	Immobilizer Module, Smart Key Control Module
MEMORY 1	10A	Instrument Cluster, Driver IMS (Integrated memory system) Module, BCM (Body Control Module), Air Conditioner Control Module, Auto Light & Photo Sensor, Driver Door Module, Passenger Door Module, ECM (Electric Chromic Mirror)
MULTI MEDIA	15A	Audio, Audio / Video & Navigation Head Unit
IG3 4	10A	OBC (On-Board Charger) Unit, TCM (Transmission Control Module), ECM (Engine Control Module), HPCU (Hybrid Power Control Unit)
IG3 3	10A	Electric Water Pump (PHEV)
IG3 5	15A	Transmission Range Switch, BMS (Battery Management System) Control Module, Engine Room Junction Block (Battery C/Fan Relay)
IG3 1	20A	ICM Relay Box (IG3 #1, IG3 #2, IG3 #3 Relay)
MDPS	7.5A	MDPS (Motor Driven Power Steering) Unit
TAIL GATE OPEN	10A	Tail Gate Relay, ICM Relay Box (Fuel Filler Door Relay, Charger Connector Lock/Unlock Relay), Fuel Filler & Battery Charger Switch, Charge Connector Lamp
PDM 1	15A	Smart Key Control Module

Fuse Name	Fuse rating	Circuit Protected
MODULE 7	7.5A	Front Seat Warmer Control Module, AC Inverter (110V), Front Air Ventilation Seat Control Module, Rear Seat Warmer Module, AC Inverter Module
WIPER (RR)	15A	Engine Room Junction Block (Wiper RR Relay), Rear Wiper Motor
HEATED STEERING	15A	BCM (Body Control Module)
SUNROOF	20A	Sunroof Motor
P/WINDOW RH	25A	Power Window (RH) Relay, Power Window Main Switch, Passenger Power Window Switch, Rear Power Window Switch RH, Passenger Safety Power Window Module
P/WINDOW LH	25A	Power Window (LH) Relay, Power Window Main Switch, Rear Power Window Switch LH, Driver Safety Power Window Module
PDM 2	7.5A	Immobilizer Module, Smart Key Control Module, Start/Stop Button Switch
BRAKE SWITCH	7.5A	Stop Lamp Switch, Smart Key Control Module
OBC	10A	OBC (On-Board Charger) Unit
A/CON	7.5A	Air Conditioner Control Module, Electronic Air Conditioner Compressor, Engine Room Junction Block (Blower Relay, PTC Heater1 Relay, PTC Heater2 Relay)
WASHER	15A	Multifunction Switch
S/HEATER (FRT)	25A	Front Seat Warmer Control Module, Front Air Ventilation Seat Control Module

Fuse Name	Fuse rating	Circuit Protected
BATTERY MANAGEMENT	10A	BMS (Battery Management System) Control Module
P/SEAT (DRV)	30A	Driver Seat Manual Switch, Driver IMS (Integrated memory system) Module
AMP	30A	AMP (Amplifier)
AMS	10A	Battery Sensor
MODULE 1	10A	Data Link Connector, Forward Collision-Avoidance Assist (FCA) Module, Hazard Switch, Driver/Passenger Door Module, Driver/Passenger Smart Key Outside Handle, Outside Mirror Folding/Unfolding Relay, Mood Lamp, Outside Mirror Switch
DOOR LOCK	20A	Door Lock/Unlock Relay, ICM Relay Box (Two Turn Unlock Relay)
WIPER2 (FRT)	10A	Wiper Motor, Engine Room Junction Block (Front Wiper (Low) Relay), ECM (Engine Control Module), BCM (Body Control Module)
MODULE 6	7.5A	BCM (Body Control Module), Smart Key Control Module
S/HEATER (REAR)	25A	Rear Seat Warmer Control Module
HEATED MIRROR	10A	Driver Power Outside Mirror, Passenger Power Outside Mirror, Air Conditioner Control Module
WIPER 1 (FRT)	30A	Wiper Motor, Engine Room Junction Block (Front Wiper (Low) Relay)

Engine compartment fuse panel

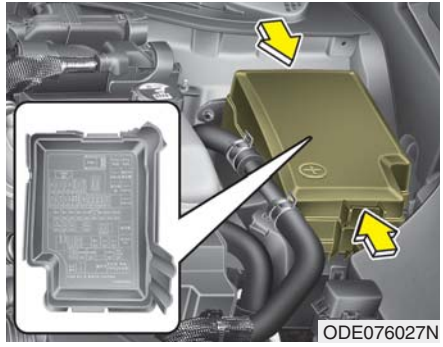
ODE076027N

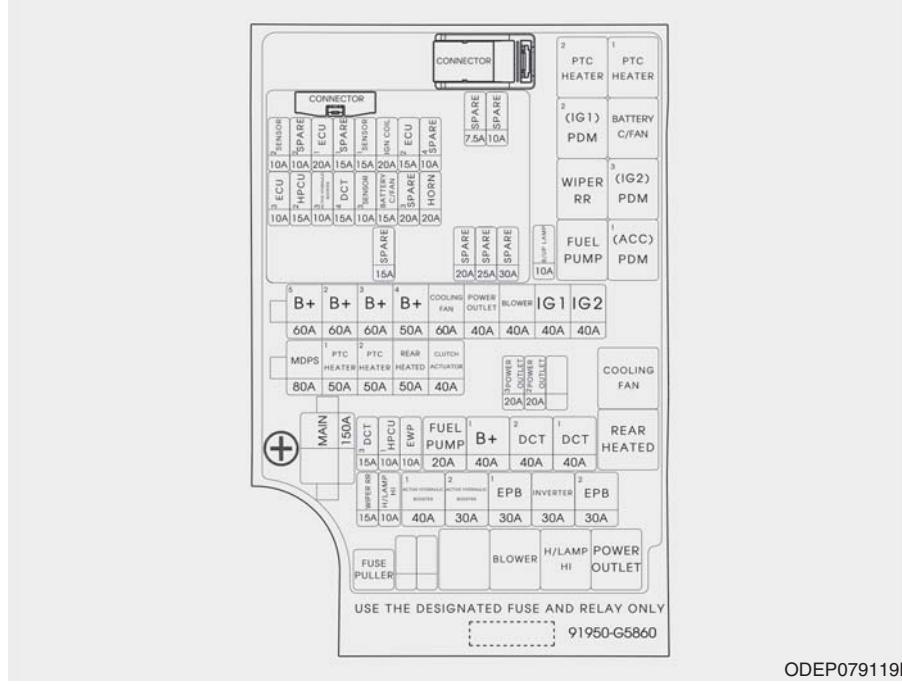

ODEP079119N

Engine room compartment fuse panel (Hybrid)

Fuse Name		Fuse rating	Circuit Protected
MULTI FUSE	B+ 5	60A	Fuse - BATTERY C/FAN, HORN, ECU2, Engine Control Relay
	B+ 2	60A	Instrument Panel Junction Block (Fuse - S/HEATER (REAR))
	B+ 3	60A	Instrument Panel Junction Block
	B+ 4	50A	Instrument Panel Junction Block (Fuse - BATTERY MANAGEMENT, P/WINDOW (LH), P/WINDOW (RH), TAIL GATE OPEN, SUNROOF, AMP, S/HEATER (FRT), P/SEAT (DRV))
	COOLING FAN	60A	Cooling Fan Relay
	REAR HEATED	50A	Rear Heated Relay
	BLOWER	40A	Blower Relay
	IG 1	40A	[Without Smart Key] Ignition Switch, [With Smart Key] PDM1 (ACC) Relay, PDM2 (IG1) Relay
	IG 2	40A	[Without Smart Key] Ignition Switch, [With Smart Key] PDM3 (IG2) Relay
	MDPS	80A	MDPS (Motor Driven Power Steering) Unit
	PTC HEATER 1	50A	PTC Heater 1 Relay
	PTC HEATER 2	50A	PTC Heater 2 Relay
	CLUTCH ACTUATOR	40A	Clutch Actuator (HEV)
	MAIN	150A	Fuse - H/LAMP HI, INVERTER, ACTIVE HYDRAULIC BOOSTER1, ACTIVE HYDRAULIC BOOSTER2, WIPER RR, EPB1, EPB2

Fuse Name		Fuse rating	Circuit Protected
FUSE	POWER OUTLET 3	20A	Power Outlet #2
	POWER OUTLET 2	20A	Power Outlet #1
	DCT 3	15A	TCM (Transmission Control Module)
	HPCU 1	10A	HPCU (Hybrid Power Control Unit)
	EWP	10A	Electric Water Pump (Engine)
	FUEL PUMP	20A	Fuel Pump Relay
	B + 1	40A	Instrument Panel Junction Block (Fuse - BRAKE SWITCH, PDM1, PDM2, MODULE1, DOOR LOCK, Leak Current Autocut Device)
	DCT 2	40A	TCM (Transmission Control Module)
	DCT 1	40A	TCM (Transmission Control Module)
	WIPER RR	15A	Wiper RR Relay
	H/LAMP HI	10A	H/Lamp HI Relay
	ACTIVE HYDRAULIC BOOTER 1	40A	Integrated Brake Actuation Unit, Multipurpose Check Connector

Fuse Name		Fuse rating	Circuit Protected
FUSE	ACTIVE HYDRAULIC BOOTER 2	30A	Integrated Brake Actuation Unit
	INVERTER	30A	AC Inverter Module
	POWER OUTLET 1	40A	Power Outlet Relay
	B/UP LAMP	10A	Electro Chromic Mirror, Back-Up Lamp LH/RH, INHIBITOR SW
	ECU 3	10A	ECM (Engine Control Module)
	HPCU 2	15A	HPCU (Hybrid Power Control Unit), Clutch Actuator (HEV)
	ACTIVE HYDRAULIC BOOTER 3	10A	Integrated Brake Actuation Unit, Multipurpose Check Connector
	DCT 4	15A	DCT (Dual clutch transmission) Shift Lever, TCM (Transmission Control Module), Inhibitor Switch
	SENSOR 3	10A	Fuel Pump Relay, Oil Control Valve #1/#2 (Intake/Exhaust), Camshaft Position Sensor #1/#2 (Intake/Exhaust)
	BATTERY C/FAN	15A	Battery C/Fan Relay
	HORN	20A	Horn Relay
	SENSOR 2	10A	Purge Control Solenoid Valve, Cooling Fan Relay, Canister Close Valve, Mass Air Flow Sensor
	ECU 1	20A	ECM (Engine Control Module)

Fuse Name		Fuse rating	Circuit Protected
FUSE	SENSOR 1	15A	Oxygen Sensor (Up), Oxygen Sensor (Down)
	IGN COIL	20A	Ignition Coil #1/#2/#3/#4
	ECU 2	15A	ECM (Engine Control Module)

Engine room compartment fuse panel (Plug-in Hybrid)

Fuse Name		Fuse rating	Circuit Protected
MULTI FUSE	B+ 5	60A	Fuse - BATTERY C/FAN, HORN, ECU2, Engine Control Relay
	B+ 2	60A	Instrument Panel Junction Block (Fuse - S/HEATER (REAR))
	B+ 3	60A	Instrument Panel Junction Block
	B+ 4	50A	Instrument Panel Junction Block (Fuse - BATTERY MANAGEMENT, P/WINDOW (LH), P/WINDOW (RH), TAIL GATE OPEN, SUNROOF, AMP, S/HEATER (FRT), P/SEAT (DRV), IG3 1, OBC, AMS)
	COOLING FAN	60A	Cooling Fan Relay
	REAR HEATED	50A	Rear Heated Relay
	BLOWER	40A	Blower Relay
	IG 1	40A	[Without Smart Key] Ignition Switch, [With Smart Key] PDM1 (ACC) Relay, PDM2 (IG1) Relay
	IG 2	40A	[Without Smart Key] Ignition Switch, [With Smart Key] PDM3 (IG2) Relay
	MDPS	80A	MDPS (Motor Driven Power Steering) Unit
	PTC HEATER 1	50A	PTC Heater 1 Relay
	PTC HEATER 2	50A	PTC Heater 2 Relay
	CLUTCH ACTUATOR	40A	Clutch Actuator (PHEV)
	MAIN	150A	Fuse - H/LAMP HI, INVERTER, ACTIVE HYDRAULIC BOOSTER1, ACTIVE HYDRAULIC BOOSTER2, WIPER RR, EPB1, EPB2

Fuse Name		Fuse rating	Circuit Protected
FUSE	POWER OUTLET 3	20A	Power Outlet #2
	POWER OUTLET 2	20A	Power Outlet #1
	DCT 3	15A	TCM (Transmission Control Module)
	HPCU 1	10A	HPCU (Hybrid Power Control Unit)
	EWP	10A	Electric Water Pump (Engine)
	FUEL PUMP	20A	Fuel Pump Relay
	B + 1	40A	Instrument Panel Junction Block (Fuse - BRAKE SWITCH, PDM1, PDM2, MODULE1, DOOR LOCK, Leak Current Autocut Device)
	DCT 2	40A	TCM (Transmission Control Module)
	DCT 1	40A	TCM (Transmission Control Module)
	WIPER RR	15A	Wiper RR Relay
	H/LAMP HI	10A	H/Lamp HI Relay
	ACTIVE HYDRAULIC BOOTER 1	40A	Integrated Brake Actuation Unit, Multipurpose Check Connector

Fuse Name		Fuse rating	Circuit Protected
FUSE	ACTIVE HYDRAULIC BOOTER 2	30A	Integrated Brake Actuation Unit
	INVERTER	30A	AC Inverter Module
	POWER OUTLET 1	40A	Power Outlet Relay
	B/UP LAMP	10A	Electro Chromic Mirror, Back-Up Lamp LH/RH, INHIBITOR SW
	ECU 3	10A	ECM (Engine Control Module)
	HPCU 2	15A	HPCU (Hybrid Power Control Unit), Clutch Actuator (PHEV)
	ACTIVE HYDRAULIC BOOTER 3	10A	Integrated Brake Actuation Unit, Multipurpose Check Connector
	DCT 4	15A	DCT(Dual clutch transmission) Shift Lever, TCM (Transmission Control Module), Inhibitor Switch
	SENSOR 3	10A	Fuel Pump Relay, Oil Control Valve #1/#2 (Intake/Exhaust), Camshaft Position Sensor #1/#2 (Intake/Exhaust)
	BATTERY C/FAN	15A	Battery C/Fan Relay
	HORN	20A	Horn Relay
	SENSOR 2	10A	Purge Control Solenoid Valve, Cooling Fan Relay, Mass Air Flow Sensor, ELCM
	ECU 1	20A	ECM (Engine Control Module)

Fuse Name		Fuse rating	Circuit Protected
FUSE	SENSOR 1	15A	Oxygen Sensor (Up), Oxygen Sensor (Down)
	IGN COIL	20A	Ignition Coil #1/#2/#3/#4
	ECU 2	15A	ECM (Engine Control Module)

Relay (Hybrid)

Relay Name	Type
PTC Heater #2 Relay	MICRO
PTC Heater #1 Relay	MICRO
PDM2 (IG1) Relay	MICRO
Battery C/FAN Relay	MICRO
Rear Wiper Relay	MICRO
PDM3 (IG2) Relay	MICRO
Fuel Pump Relay	MICRO
PDM1 (ACC) Relay	MICRO
Cooling Fan Relay	MINI
Rear Heated Relay	MINI
Blower Relay	MICRO
H/LAMP HI RELAY	MICRO
Power Outlet Relay	MICRO

Relay (Plug-in Hybrid)

Relay Name	Type
PTC Heater #2 Relay	MICRO
PTC Heater #1 Relay	MICRO
PDM2 (IG1) Relay	MICRO
Battery C/FAN Relay	MICRO
Rear Wiper Relay	MICRO
PDM3 (IG2) Relay	MICRO
Fuel Pump Relay	MICRO
PDM1 (ACC) Relay	MICRO
Cooling Fan Relay	MINI
Rear Heated Relay	MINI
Blower Relay	MICRO
H/LAMP HI RELAY	MICRO
Power Outlet Relay	MICRO

Battery terminal cover (Plug-in Hybrid)

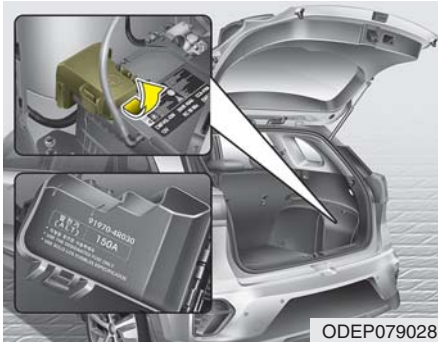

ODEP079028

✻ NOTICE

Not all fuse panel descriptions in this manual may be applicable to your vehicle. It is accurate at the time of printing. When you inspect the fuse panel in your vehicle, refer to the fuse panel label.

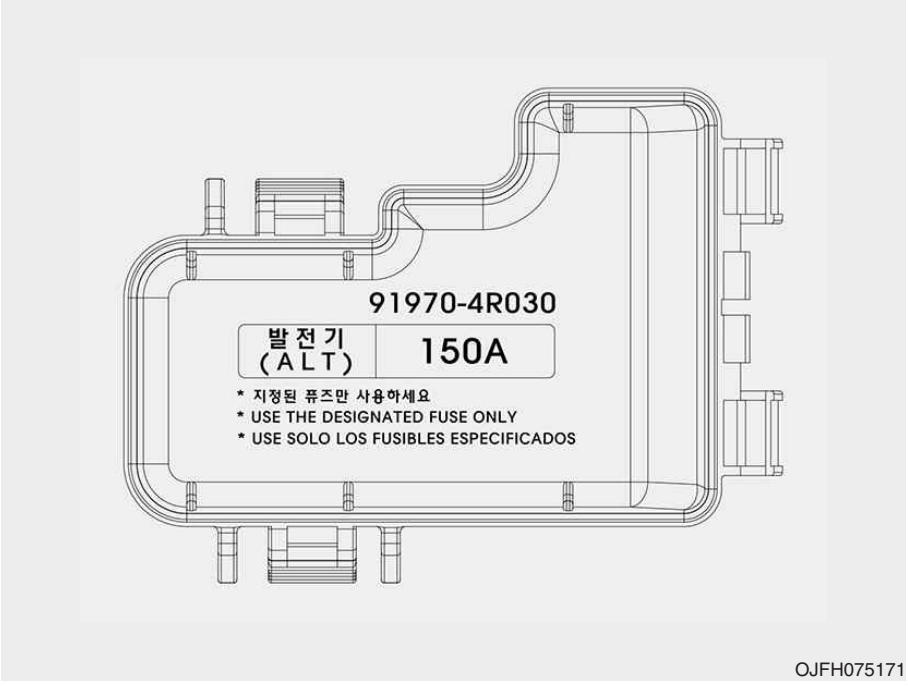

OJFH075171

LIGHT BULBS

Bulb replacement precaution

Please keep extra bulbs on hand with appropriate wattage ratings in case of emergencies.

Refer to “Bulb Wattage” in chapter 8.

When changing lamps, first turn off the engine at a safe place, firmly apply the parking brake and detach the battery’s negative (-) terminal.

⚠ WARNING - Working on the lights

Prior to working on the light, firmly apply the parking brake, ensure that the engine start/stop button is in OFF position and turn off the lights to avoid sudden movement of the vehicle and burning your fingers or receiving an electric shock.

Use only bulbs of the specified wattage.

⚠ CAUTION - Light replacement

Be sure to replace the burned-out bulb with one of the same wattage rating. Otherwise, it may cause damage to the fuse or electric wiring system.

⚠ CAUTION - Headlamp Lens

To prevent damage, do not clean the headlamp lens with chemical solvents or strong detergents.

✻ NOTICE

- **If the light bulb or lamp connector is removed while the lamp is still on, the fuse box's electronic system may log it as a malfunction. Therefore, a lamp malfunction incident may be recorded as a Diagnostic Trouble Code (DTC) in the fuse box.**
- **It is normal for an operating lamp to flicker momentarily. This is due to a stabilization function of the vehicle’s electronic control device. If the lamp lights up normally after momentarily blinking, then it is functioning as normal. However, if the lamp continues to flicker several times or turns off completely, there may be an error in the vehicle’s electronic control device. Please have the vehicle checked by an authorized Kia dealer immediately.**

✻ NOTICE

We recommend that the headlight aiming be adjusted by an authorized Kia dealer after an accident or after the headlight assembly is reinstalled.

✻ NOTICE

You can find moisture inside the lens of lamps after a car wash or driving in the rain. It is a natural event caused by the temperature difference between the inside and the outside of the lamp and does not mean a problem with its functions. The moisture inside the lamp would disappear if you drive the vehicle with the headlamp turned on, however, the level at which the moisture is removed may differ depending on the size/location/condition of the lamp. If the moisture continues to stay inside the lamp, we recommend that you have the vehicle checked by an authorized Kia dealer.

If you don't have the necessary tools, the correct bulbs and the expertise, consult an authorized Kia dealer. In many cases, it is difficult to replace vehicle light bulbs because other parts of the vehicle must be removed before you can get to the bulb. This is especially true if you have to remove the headlamp assembly to get to the bulb(s).

Removing/installing the headlamp assembly can result in damage to the vehicle.

If non-genuine parts or substandard bulbs are used, it may lead to blowing a fuse or other wiring damages.

Do not install extra lamps or LEDs to the vehicle. If additional lights are installed, it may lead to lamp malfunctions and flickering. Additionally, the fuse box and other writing may be damaged.

Light bulb position (Front)

(1) Headlamp (Low/High) (Bulb type)
(2) Front turn signal lamp (Bulb type)
(3) Front side marker (Bulb type)
(4) Headlamp (Low/High) (LED type)

(5) Headlamp (Low) (LED type)
(6) Front turn signal lamp (LED type)
(7) Front side marker (LED type)

■ Daytime running lamp & Position lamp

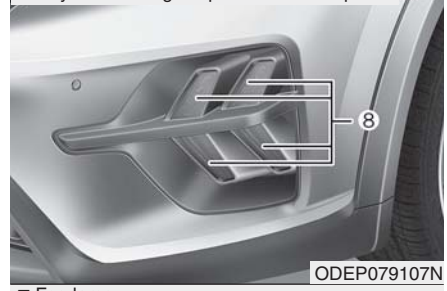

ODEP079107N

■ Fog lamp

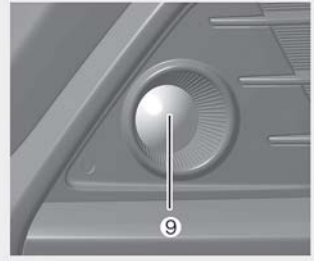

ODEP079100N

(8) Daytime running lamp/Position lamp (LED type)
(9) Front fog lamp (Bulb/LED type)

Light bulb position (Rear)

■ Rear combination lamp - Type A

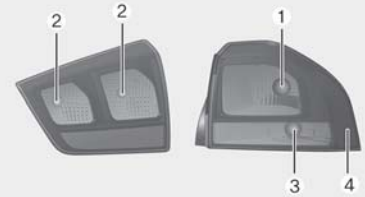

ODE076031N

■ Rear combination lamp - Type B

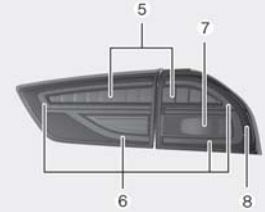

ODEP079102N

■ Back-up lamp

ODEP079104N

■ License plate lamp

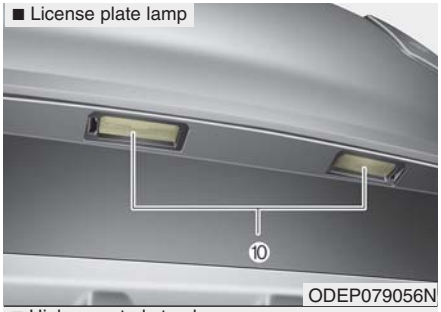

ODEP079056N

■ High mounted stop lamp

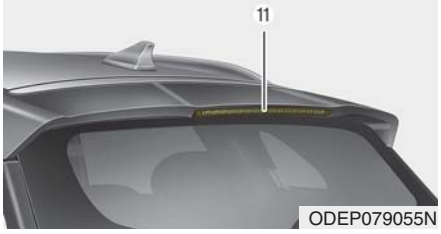

ODEP079055N

(1) Stop/tail lamp (Bulb type)
(2) Tail lamp (Bulb type)
(3) Rear turn signal lamp (Bulb type)
(4) Rear side marker (Bulb type)
(5) Stop lamp (LED type)
(6) Stop/tail lamp (LED type)
(7) Rear turn signal lamp (Bulb type)
(8) Rear side marker (LED type)
(9) Back-up lamp (Bulb type)
(10) License plate lamp (Bulb type)
(11) High mounted stop lamp (LED type)

Light bulb position (Side)

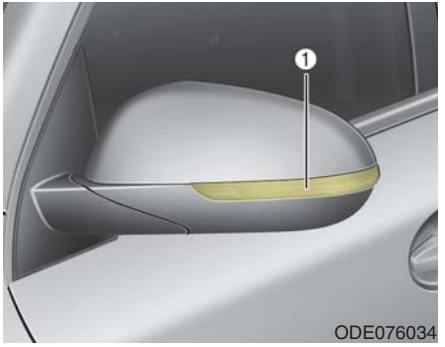

ODE076034

(1) Side repeater lamp (LED type)

Headlamp (High/Low beam) (Bulb type) bulb replacement (Headlamp type A)

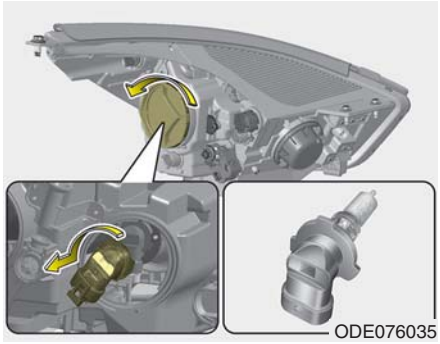

1. Open the hood.
2. Remove the headlamp bulb cover by turning it counterclockwise.
3. Disconnect the headlamp bulb socket-connector.
4. Remove the bulb-socket from the headlamp assembly by turning the bulb-socket counterclockwise until the tabs on the bulb-socket align with the slots on the headlamp assembly.
5. Install a new bulb-socket assembly in the headlamp assembly by aligning the tabs on the bulb-socket with the slots in the headlamp assembly. Push the bulb-socket into the headlamp assembly and turn the bulb-socket clockwise.
6. Install the headlamp bulb cover by turning it clockwise.

Headlamp bulb

⚠ WARNING - Halogen bulbs

- **Halogen bulbs contain pressurized gas that will produce flying pieces of glass if broken.**

(Continued)

(Continued)

- **Always handle them carefully, and avoid scratches and abrasions. If the bulbs are lit, avoid contact with liquids. Never touch the glass with bare hands. Residual oil may cause the bulb to overheat and burst when lit.**

  A bulb should be operated only when installed in a headlight.
- **If a bulb becomes damaged or cracked, replace it immediately and carefully dispose of it.**
- **Wear eye protection when changing a bulb. Allow the bulb to cool down before handling it.**

Front turn signal lamp (Bulb type) bulb replacement (Headlamp type A)

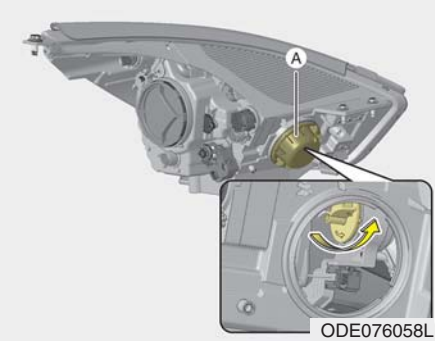

ODE076058L

1. Open the hood.
2. Remove the dust cover (A) from the headlamp assembly then bulb-socket by turning the counterclockwise until the tabs on the bulb-socket align with the slots on the headlamp assembly.
3. Remove the bulb from the bulb-socket by pressing it in and rotating it counterclockwise until the tabs on the bulb align with the slots in the bulb-socket. Pull the bulb out of the bulb-socket.
4. Insert a new bulb by inserting it into the bulb-socket and rotating it until it locks into place.
5. Install the socket in the headlamp assembly by aligning the tabs on the bulb-socket with the slots in the assembly. Push the bulb-socket into the headlamp assembly and turn the socket clockwise.

Front side marker (Bulb type) bulb replacement (Headlamp type A)

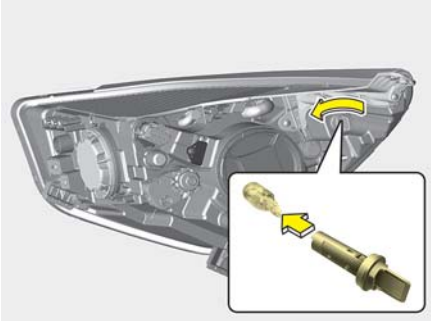

ODEP079124N

1. Open the hood.
2. Remove the bulb-socket from the headlamp assembly by turning the bulb-socket counterclockwise until the tabs on the bulb-socket align with the slots on the headlamp assembly.
3. Remove the bulb from the bulb-socket by pulling it out.
4. Insert a new bulb by inserting it into the bulb-socket.
5. Install the socket in the headlamp assembly by aligning the tabs on the bulb-socket with the slots in the assembly. Push the bulb-socket into the headlamp assembly and turn the socket clockwise.

Headlamp (High/Low beam) (LED type) bulb replacement (Headlamp type B)

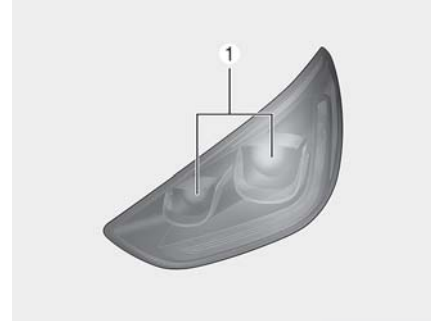

ODEP077068

If the headlamp (LED type) (1) does not operate, have the vehicle checked by an authorized Kia dealer.

The LED lamp cannot be replaced as a single component because it is an integrated unit. The LED lamp has to be replaced with the unit.

A skilled technician should check or repair the headlamp (LED type), for it may damage related parts of the vehicle.

Front turn signal (LED type) bulb replacement (Headlamp type B)

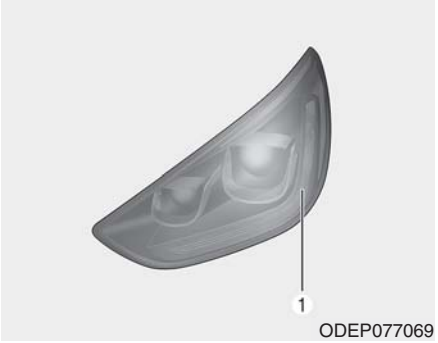

ODEP077069

If the front turn signal lamp (LED type) (1) does not operate, have the vehicle checked by an authorized Kia dealer.

The LED lamp cannot be replaced as a single component because it is an integrated unit. The LED lamp has to be replaced with the unit.

A skilled technician should check or repair the front turn signal lamp (LED type), for it may damage related parts of the vehicle.

Front side marker (LED type) bulb replacement (Headlamp type B)

ODEP079121N

If the front side marker (LED type) (1) does not operate, have the vehicle checked by an authorized Kia dealer.

The LED lamp cannot be replaced as a single component because it is an integrated unit. The LED lamp has to be replaced with the unit.

A skilled technician should check or repair the front side marker (LED type), for it may damage related parts of the vehicle.

Daytime running lamp/Position lamp (LED type) bulb replacement

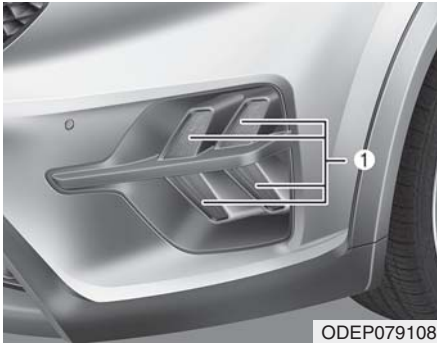

ODEP079108

If the daytime running lamp/position lamp (LED type) (1) does not operate, have the vehicle checked by an authorized Kia dealer.

The LED lamp cannot be replaced as a single component because it is an integrated unit. The LED lamp has to be replaced with the unit.

A skilled technician should check or repair the daytime running lamp/position lamp (LED type), for it may damage related parts of the vehicle.

Front fog lamp (Bulb/LED type) bulb replacement

ODEP079101

If the front fog lamp (Bulb/LED type) (1) does not operate, have the vehicle checked by an authorized Kia dealer.

Stop and tail lamp, Rear turn signal lamp (Bulb type) bulb replacement

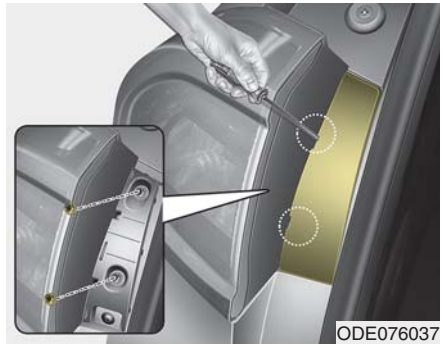
ODE076037

1. Open the liftgate.
2. Open the service cover.
3. Loosen the light assembly retaining screws with a cross-tip screwdriver.

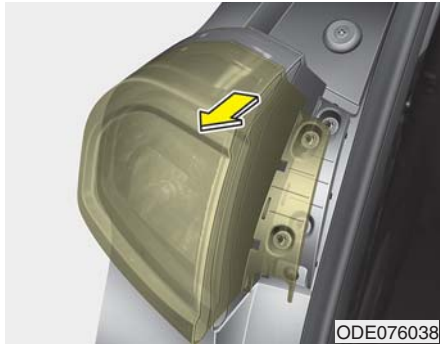
ODE076038

4. Remove the rear combination lamp assembly from the body of the vehicle.
5. Disconnect the rear combination lamp connector.

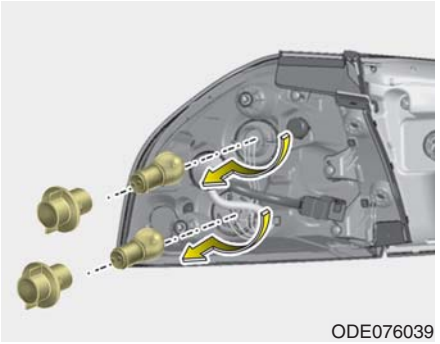
ODE076039

6. Remove the socket from the assembly by turning the socket counterclockwise until the tabs on the socket align with the slots on the assembly.
7. Remove the bulb from the socket by pressing it in and rotating it counterclockwise until the tabs on the bulb align with the slots in the socket. Pull the bulb out of the socket.
8. Insert a new bulb by inserting it into the socket and rotating it until it locks into place.
9. Install the socket in the assembly by aligning the tabs on the socket with the slots in the assembly. Push the socket into the assembly and turn the socket clockwise.
10. Install the rear combination lamp assembly to the body of the vehicle.
11. Install the service cover.

Tail lamp (inside) (Bulb type) bulb replacement

ODE076040

1. Open the liftgate.
2. Remove the service cover.

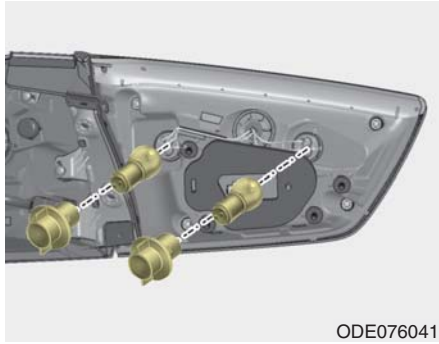
ODE076041

3. Remove the socket from the assembly by turning the socket counterclockwise until the tabs on the socket align with the slots on the assembly.
4. Remove the bulb from the socket by pressing it in and rotating it counter-clockwise until the tabs on the bulb align with the slots in the socket. Pull the bulb out of the socket.
5. Insert a new bulb by inserting it into the socket and rotating it until it locks into place.
6. Install the socket in the assembly by aligning the tabs on the socket with the slots in the assembly. Push the socket into the assembly and turn the socket clockwise.
7. Install the service cover by putting it into the service hole.

Rear side marker (Bulb type) bulb replacement

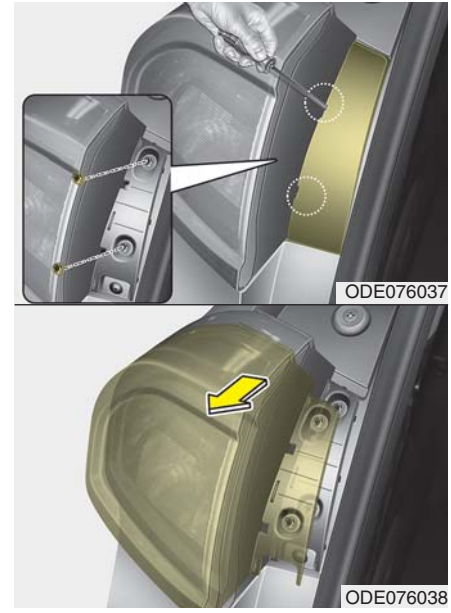
ODE076037
ODE076038

1. Open the liftgate.
2. Remove the service cover.
3. Loosen the light assembly retaining screws with a cross-tip screwdriver.

4. Remove the rear combination lamp assembly from the body of the vehicle.
5. Disconnect the rear combination lamp connector.

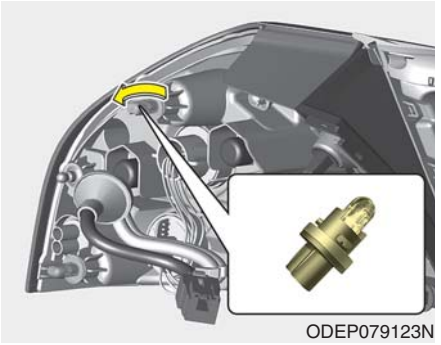
ODEP079123N

6. Remove the socket from the assembly by turning the socket counterclockwise until the tabs on the socket align with the slots on the assembly.
7. Remove the bulb from bulb-socket by pulling it out.
8. Insert a new bulb by inserting it into the bulb-socket.
9. Install the socket in the assembly by aligning the tabs on the socket with the slots in the assembly. Push the socket into the assembly and turn the socket clockwise.
10. Connect the rear combination lamp connector.
11. Install the rear combination lamp assembly to the body of the vehicle.
12. Install the service cover.

Stop and tail lamp (LED type) bulb replacement

ODEP079103

If the stop and tail lamp (LED type) (1) does not operate, have the vehicle checked by an authorized Kia dealer.

The LED lamp cannot be replaced as a single component because it is an integrated unit. The LED lamp has to be replaced with the unit.

A skilled technician should check or repair the stop and tail lamp (LED type), for it may damage related parts of the vehicle.

Rear side marker (LED type) bulb replacement

ODEP079122N

If the rear side marker (LED type) (1) does not operate, have the vehicle checked by an authorized Kia dealer.

The LED lamp cannot be replaced as a single component because it is an integrated unit. The LED lamp has to be replaced with the unit.

A skilled technician should check or repair the rear side marker (LED type), for it may damage related parts of the vehicle.

Back-up lamp (Bulb type) bulb replacement

ODEP079111L

If the back-up lamp (Bulb type) (1) does not operate, have the vehicle checked by an authorized Kia dealer.

License plate lamp (Bulb type) bulb replacement

1. Using a flat-blade screwdriver, gently pry the lens cover from lamp housing.
2. Remove the socket from the assembly by turning the socket counterclockwise until the tabs on the socket align with the slots on the assembly.
3. Remove the bulb from bulb-socket by pulling it out.
4. Insert a new bulb by inserting it into the bulb-socket.
5. Install the socket in the assembly by aligning the tabs on the socket with the slots in the assembly. Push the socket into the assembly and turn the socket clockwise.
6. Align the lens cover tabs with the lamp housing notches and snap the lens into place.

High mounted stop lamp (LED type) bulb replacement

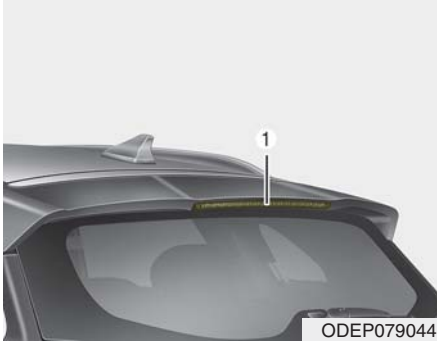

If the high mounted stop lamp (LED type) (1) does not operate, have the vehicle checked by an authorized Kia dealer.

The LED lamp cannot be replaced as a single component because it is an integrated unit. The LED lamp has to be replaced with the unit.

A skilled technician should check or repair the high mounted stop lamp (LED type), for it may damage related parts of the vehicle.

Side repeater lamp (LED type) bulb replacement

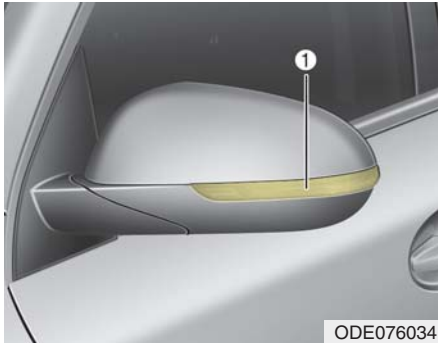

ODE076034

If the side repeater lamp (LED type) (1) does not operate, have the vehicle checked by an authorized Kia dealer.

The LED lamp cannot be replaced as a single component because it is an integrated unit. The LED lamp has to be replaced with the unit.

A skilled technician should check or repair the side repeater lamp (LED type), for it may damage related parts of the vehicle.

Map lamp (Bulb type) bulb replacement

ODE076047

1. Using a flat-blade screwdriver, gently pry the lens cover from lamp housing.
2. Remove the bulb by pulling it straight out.
3. Install a new bulb in the socket.
4. Align the lens cover tabs with the lamp housing notches and snap the lens into place.

⚠ CAUTION

Be careful not to dirty or damage the lens, lens tab, and plastic housings.

Map lamp (LED type) bulb replacement

OQM076063

If the map lamp (LED type) (1) does not operate, have the vehicle checked by an authorized Kia dealer.

The LED lamp cannot be replaced as a single component because it is an integrated unit. The LED lamp has to be replaced with the unit.

A skilled technician should check or repair the map lamp (LED type), for it may damage related parts of the vehicle.

Vanity mirror lamp (Bulb type) bulb replacement

ODE076048

⚠ WARNING

Prior to working on the Interior lamps, ensure that the "OFF" button is depressed to avoid burning your fingers or receiving an electric shock.

1. Using a flat-blade screwdriver, gently pry the lamp assembly from interior.
2. Remove the bulb by pulling it straight out.
3. Install a new bulb in the socket.
4. Install the lamp assembly to interior.

⚠ CAUTION

Be careful not to dirty or damage the lens, lens tab, and plastic housings.

Room lamp (Bulb type) bulb replacement

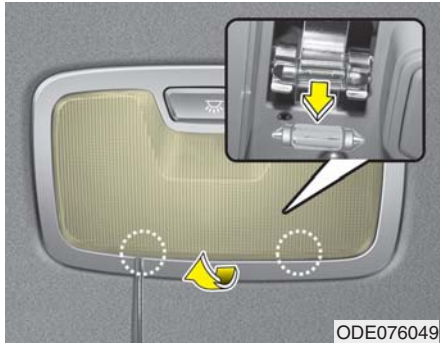
ODE076049

⚠ WARNING

Prior to working on the Interior lamps, ensure that the "OFF" button is depressed to avoid burning your fingers or receiving an electric shock.

1. Using a flat-blade screwdriver, gently pry the lens cover from lamp housing.
2. Remove the bulb by pulling it straight out.
3. Install a new bulb in the socket.
4. Align the lens cover tabs with the lamp housing notches and snap the lens into place.

⚠ CAUTION

Be careful not to dirty or damage the lens, lens tab, and plastic housings.

Room lamp (LED type) bulb replacement

ODEP077070

If the room lamp (LED type) (1) does not operate, have the vehicle checked by an authorized Kia dealer.

The LED lamp cannot be replaced as a single component because it is an integrated unit. The LED lamp has to be replaced with the unit.

A skilled technician should check or repair the room lamp (LED type), for it may damage related parts of the vehicle.

Liftgate room lamp (Bulb type) bulb replacement

ODE076050

1. Using a flat-blade screwdriver, gently pry the lens cover from lamp housing.
2. Remove the bulb by pulling it straight out.
3. Install a new bulb in the socket.
4. Align the lens cover tabs with the lamp housing notches and snap the lens into place.

⚠ CAUTION

Be careful not to dirty or damage the lens, lens tab, and plastic housings.

Liftgate room lamp (LED type) bulb replacement

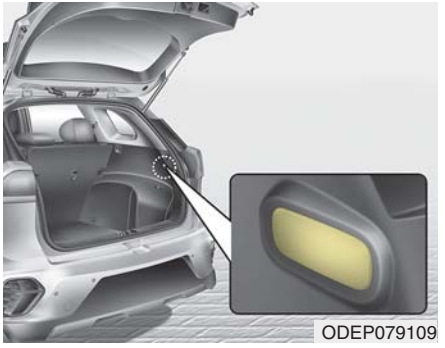
ODEP079109

If the liftgate room lamp (LED type) (1) does not operate, have the vehicle checked by an authorized Kia dealer.

The LED lamp cannot be replaced as a single component because it is an integrated unit. The LED lamp has to be replaced with the unit.

A skilled technician should check or repair the liftgate room lamp (LED type), for it may damage related parts of the vehicle.

APPEARANCE CARE

Exterior care

Exterior general caution

It is very important to follow the label directions when using any chemical cleaner or polish. Read all warning and caution statements that appear on the label.

✱ NOTICE

If you park the vehicle around a stainless signboard or windshield building etc., the plastic exterior trim (bumper, spoiler, garnish, lamp, outside mirror etc.) may be damaged by reflected sunlight from the external structure. To avoid damaging the plastic exterior trim, park the vehicle away from the areas where the reflected light may occur or use a vehicle cover (Depending on the vehicle, the type of exterior trim applied such as spoiler may differ).

Finish maintenance

Washing

To help protect your vehicle's finish from rust and deterioration, wash it thoroughly and frequently at least once a month with lukewarm or cold water.

If you use your vehicle for off-road driving, you should wash it after each off-road trip. Pay special attention to the removal of any accumulation of salt, dirt, mud, and other foreign materials. Make sure the drain holes in the lower edges of the doors and rocker panels are kept clear and clean.

Insects, tar, tree sap, bird droppings, industrial pollution and similar deposits can damage your vehicle's finish if not removed immediately.

Even prompt washing with plain water may not completely remove all these deposits. A mild soap, safe for use on painted surfaces, may be used.

After washing, rinse the vehicle thoroughly with lukewarm or cold water. Do not allow soap to dry on the finish.

After washing the vehicle, test the brakes while driving slowly to see if they have been affected by water. If braking performance is impaired, dry the brakes by applying them lightly while maintaining a slow forward speed.

High-pressure washing

- When using high-pressure washers, make sure to maintain sufficient distance from the vehicle.

  Insufficient clearance or excessive pressure can lead to component damage or water penetration.
- Do not spray the camera, sensors or its surrounding area directly with a high pressure washer. Shock applied from high pressure water may cause the device to not operate normally.
- Do not bring the nozzle tip close to boots (rubber or plastic covers) or connectors as they may be damaged if they come into contact with high pressure water.

ODEP079071L

⚠ **CAUTION - Wet engine**

- ***Water washing in the engine compartment including high pressure water washing may cause the failure of electrical circuits located in the engine compartment.***
- ***Never allow water or other liquids to come in contact with electrical/electronic components inside the vehicle as this may damage them.***

(Continued)

(Continued)

- ***To prevent damage to the charging door, make sure to close and lock the vehicle doors when washing (high-pressure washing, automatic car washing, etc.) the vehicle.***

Waxing

Wax the vehicle when water will no longer bead on the paint.

Always wash and dry the vehicle before waxing. Use a good quality liquid or paste wax, and follow the manufacturer's instructions. Wax all metal trim to protect it and to maintain its luster.

Removing oil, tar, and similar materials with a spot remover will usually strip the wax from the finish. Be sure to re-wax these areas even if the rest of the vehicle does not yet need waxing.

Do not apply wax on embossed unpainted unit, as it may tarnish the unit.

⚠ **CAUTION - Drying vehicle**

- ***Wiping dust or dirt off the body with a dry cloth will scratch the finish.***
- ***Do not use steel wool, abrasive cleaners, acid detergents or strong detergents containing high alkaline or caustic agents on chrome-plated or anodized aluminum parts. This may result in damage to the protective coating and cause discoloration or paint deterioration.***

Finish damage repair

Deep scratches or stone chips in the painted surface must be repaired promptly. Exposed metal will quickly rust and may develop into a major repair expense.

If your vehicle is damaged and requires any metal repair or replacement, be sure the body shop applies anti-corrosion materials to the parts repaired or replaced.

Bright-metal maintenance

- To remove road tar and insects, use a tar remover, not a scraper or other sharp object.
- To protect the surfaces of bright-metal parts from corrosion, apply a coating of wax or chrome preservative and rub to a high luster.
- During winter weather or in coastal areas, cover the bright metal parts with a heavier coating of wax or preservative. If necessary, coat the parts with non-corrosive petroleum jelly or other protective compound.

Underbody maintenance

Road salt and other corrosive chemicals are used in cold weather states to melt snow and prevent ice accumulation. If these chemicals are not regularly removed, they will corrode the vehicle underbody and over time damage fuel lines, the fuel tank retention system, the vehicle suspension, the exhaust system, and even the body frame.

- Wash the undercarriage of your vehicle regularly during the winter and whenever your vehicle has been exposed to such salts or chemicals.
- Do a thorough washing of the undercarriage at the end of the winter.
- Use professional service technicians or governmental inspection stations to annually inspect for corrosion.
- Immediately seek an inspection of your vehicle if you become visually aware of corrosion flaking or scaling or if you become aware of a change in vehicle performance, such as soft or spongey brakes, fluids leaking, impairment of directional control, suspension noises or rattling metal straps.

Aluminum wheel maintenance

The aluminum wheels are coated with a clear protective finish.

- Do not use any abrasive cleaner, polishing compound, solvent, or wire brushes on aluminum wheels. They may scratch the finish.
- Clean the wheel when it has cooled.
- Use only a mild soap or neutral detergent, and rinse thoroughly with water. Also, be sure to clean the wheels after driving on salted roads. This helps prevent corrosion.
- Avoid washing the wheels with high-speed vehicle wash brushes.
- Do not use any alkaline or acid detergents It may damage and corrode the aluminum wheels coated with a clear protective finish.

⚠ WARNING

After washing the vehicle, test the brakes while driving slowly to see if they have been affected by water. If braking performance is impaired, dry the brakes by applying them lightly while maintaining a slow forward speed.

Corrosion protection

Protecting your vehicle from corrosion

By using the most advanced design and construction practices to combat corrosion, we produce vehicles of the highest quality. However, this is only part of the job. To achieve the long-term corrosion resistance your vehicle can deliver, the owner's cooperation and assistance is also required.

Common causes of corrosion

The most common causes of corrosion on your vehicle are:

- Road salt, dirt and moisture that is allowed to accumulate underneath the vehicle.
- Removal of paint or protective coatings by stones, gravel, abrasion or minor scrapes and dents which leave unprotected metal exposed to corrosion.

High-corrosion areas

If you live in an area where your vehicle is regularly exposed to corrosive materials, corrosion protection is particularly important. Some of the common causes of accelerated corrosion are road salts, dust control chemicals, ocean air and industrial pollution.

Moisture breeds corrosion

Moisture creates the conditions in which corrosion is most likely to occur. For example, corrosion is accelerated by high humidity, particularly when temperatures are just above freezing. In such conditions, the corrosive material is kept in contact with the vehicle's surface by moisture that evaporates slowly.

Mud is particularly corrosive because it dries slowly and holds moisture in contact with the vehicle. Although the mud appears to be dry, it can still retain the moisture and promote corrosion.

High temperatures can also accelerate corrosion of parts that are not properly ventilated so the moisture can be dispersed. For all these reasons, it is particularly important to keep your vehicle clean and free of mud or accumulations of other materials. This applies not only to the visible surfaces but particularly to the underside of the vehicle.

To help prevent corrosion

You can help prevent corrosion from beginning by observing the following:

Keep your vehicle clean

The best way to prevent corrosion is to keep your vehicle clean and free of corrosive materials. Attention to the underside of the vehicle is particularly important.

- If you live in a high-corrosion area — where road salts are used, near the ocean, areas with industrial pollution, acid rain, etc.—, you should take extra care to prevent corrosion. In winter, hose off the underside of your vehicle at least once a month and be sure to clean the underside thoroughly when winter is over.
- When cleaning underneath the vehicle, give particular attention to the components under the fenders and other areas that are hidden from view. Do a thorough job; just dampening the accumulated mud rather than washing it away will accelerate corrosion rather than prevent it. Water under high pressure and steam are particularly effective in removing accumulated mud and corrosive materials.

- When cleaning lower door panels, rocker panels and frame members, be sure that drain holes are kept open so that moisture can escape and not be trapped inside to accelerate corrosion.

Keep your garage dry

Don't park your vehicle in a damp, poorly ventilated garage. This creates a favorable environment for corrosion. This is particularly true if you wash your vehicle in the garage or drive it into the garage when it is still wet or covered with snow, ice or mud. Even a heated garage can contribute to corrosion unless it is well ventilated so moisture is dispersed.

Keep paint and trim in good condition

Scratches or chips in the finish should be covered with "touch-up" paint as soon as possible to reduce the possibility of corrosion. If bare metal is showing through, the attention of a qualified body and paint shop is recommended.

Bird droppings : Bird droppings are highly corrosive and may damage painted surfaces in just a few hours. Always remove bird droppings as soon as possible.

Don't neglect the interior

Moisture can collect under the floor mats and carpeting and cause corrosion. Check under the mats periodically to be sure the carpeting is dry. Use particular care if you carry fertilizers, cleaning materials or chemicals in the vehicle.

These should be carried only in proper containers and any spills or leaks should be cleaned up, flushed with clean water and thoroughly dried.

Interior care

Interior general precautions

Prevent chemicals such as perfume, cosmetic oil, sun cream, hand cleaner, and air freshener from contacting the interior parts because they may cause damage or discoloration. If they do contact the interior parts, wipe them off immediately. If necessary, use a vinyl cleaner, see product instructions for correct usage.

⚠ CAUTION - Electrical components

Never allow water or other liquids to come in contact with electrical/electronic components inside the vehicle as this may damage them.

⚠ CAUTION - Leather

When cleaning leather products (steering wheel, seats etc.), use neutral detergents or low alcohol content solutions. If you use high alcohol content solutions or acid/alkaline detergents, the color of the leather may fade or the surface may get stripped off.

Taking care of leather seats

- Vacuum the seat periodically to remove dust and sand on the seat. It will prevent abrasion or damage of the leather and maintain its quality.
- Wipe the natural leather seat cover often with dry or soft cloth.
- Sufficient use of a leather protective may prevent abrasion of the cover and helps maintain the color.

  Be sure to read the instructions and consult a specialist when using leather coating or protective agents.
- Leather with bright colors(beige, cream beige) is easily contaminated and clear in appearance. Clean the seats frequently.
- Avoid wiping with wet cloth. It may cause the surface to crack.

Cleaning the leather seats

- Remove all contaminations instantly. Refer to instructions below for removal of each contaminant.
- Cosmetic products(sunscreen, foundation, etc.)
  - Apply cleansing cream on a cloth and wipe the contaminated point. Wipe off the cream with a wet cloth and remove water with a dry cloth.
- Beverages(coffee, soft drink, etc.)
  - Apply a small amount of neutral detergent and wipe until contaminations do not smear.
- Oil
  - Remove oil instantly with absorbable cloth and wipe with stain remover for natural leather only.
- Chewing gum
  - Harden the gum with ice and remove gradually.

Fabric seat cover using precautions (If equipped)

Please clean the fabric seats regularly with a vacuum cleaner in consideration of fabric material characteristics. If they are heavily soiled with beverage stains, etc., use a suitable interior cleaner. To prevent damage to seat covers, wipe off the seat covers down to the seams with a large wiping motion and moderate pressure using a soft sponge or microfiber cloth.

Velcro closures on clothing or sharp objects may cause snagging or scratches on the surface of the seats. Make sure not to rub such objects against the surface.

Cleaning the upholstery and interior trim

Vinyl

Remove dust and loose dirt from vinyl with a whisk broom or vacuum cleaner. Clean vinyl surfaces with a vinyl cleaner.

Fabric

Remove dust and loose dirt from fabric with a whisk broom or vacuum cleaner. Clean with a mild soap solution recommended for upholstery or carpets. Remove fresh spots immediately with a fabric spot cleaner. If fresh spots do not receive immediate attention, the fabric can be stained and its color can be affected. Also, its fire-resistant properties can be reduced if the material is not properly maintained.

Using anything but recommended cleaners and procedures may affect the fabric's appearance and fire-resistant properties.

Cleaning the lap/shoulder belt webbing

Clean the belt webbing with any mild soap solution recommended for cleaning upholstery or carpet. Follow the instructions provided with the soap. Do not bleach or re-dye the webbing because this may weaken it.

Cleaning the interior window glass

If the interior glass surfaces of the vehicle become fogged (that is, covered with an oily, greasy or waxy film), they should be cleaned with a glass cleaner. Follow the directions on the glass cleaner container.

⚠ CAUTION - Rear window

Do not scrape or scratch the inside of the rear window. This may result in damage of the rear window defroster grid.

Window tinting precaution

Window tint(especially metallic film) might cause communication disorder or poor radio reception, and malfunction of the automatic lighting system due to excessive change of illumination inside the vehicle. The solution used might also flow into electric, electronic devices causing disorder and failure.

EMISSION CONTROL SYSTEM

The emission control system of your vehicle is covered by a written limited warranty. Please see the warranty information contained in the Warranty & Consumer Information manual in your vehicle.

Your vehicle is equipped with an emission control system to meet all applicable emission regulations.

There are three emission control systems, as follows.

(1) Crankcase emission control system
(2) Evaporative emission control system
(3) Exhaust emission control system

In order to assure the proper function of the emission control systems, it is recommended that you have your vehicle inspected and maintained by an authorized Kia dealer in accordance with the maintenance schedule in this manual.

Caution for the Inspection and Maintenance Test (With Electronic Stability Control (ESC) system)

- **To prevent the vehicle from misfiring during dynamometer testing, turn the Electronic Stability Control (ESC) system off by pressing the ESC switch.**
- **After dynamometer testing is completed, turn the ESC system back on by pressing the ESC switch again.**

1. Crankcase emission control system

The positive crankcase ventilation system is employed to prevent air pollution caused by blow-by gases being emitted from the crankcase. This system supplies fresh filtered air to the crankcase through the air intake hose. Inside the crankcase, the fresh air mixes with blow-by gases, which then pass through the PCV valve into the induction system.

2. Evaporative emission control (including ORVR: Onboard Refueling Vapor Recovery) system

The Evaporative Emission Control System is designed to prevent fuel vapors from escaping into the atmosphere.

(The ORVR system is designed to allow the vapors from the fuel tank to be loaded into a canister while refueling at the gas station, preventing the escape of fuel vapors into the atmosphere.)

Canister

Fuel vapors generated inside the fuel tank are absorbed and stored in the onboard canister. When the engine is running, the fuel vapors absorbed in the canister are drawn into the surge tank through the purge control solenoid valve.

Purge Control Solenoid Valve (PCSV)

The purge control solenoid valve is controlled by the Engine Control Module (ECM); when the engine coolant temperature is low during idling, the PCSV closes so that evaporated fuel is not taken into the engine. After the engine warms up during ordinary driving, the PCSV opens to introduce evaporated fuel to the engine.

3. Exhaust emission control system

The Exhaust Emission Control System is a highly effective system which controls exhaust emissions while maintaining good vehicle performance.

Engine exhaust gas precautions (carbon monoxide)

- Carbon monoxide can be present with other exhaust fumes. Therefore, if you smell exhaust fumes of any kind inside your vehicle, have it inspected and repaired immediately. If you ever suspect exhaust fumes are coming into your vehicle, drive it only with all the windows fully open. Have your vehicle checked and repaired immediately.

⚠ WARNING - Exhaust

Engine exhaust gases contain carbon monoxide (CO). Though colorless and odorless, it is dangerous and could be lethal if inhaled. Follow the instructions on this page to avoid CO poisoning.

- Do not operate the engine in confined or closed areas (such as garages) any more than what is necessary to move the vehicle in or out of the area.
- When the vehicle is stopped in an open area for more than a short time with the engine running, adjust the ventilation system (as needed) to draw outside air into the vehicle.
- Never sit in a parked or stopped vehicle for any extended time with the engine running.
- When the engine stalls or fails to start, excessive attempts to restart the engine may cause damage to the emission control system.

Operating precautions for catalytic converters (if equipped)

⚠ WARNING - Catalytic converter

Keep away from the catalytic converter and exhaust system while the vehicle is running or immediately thereafter. The exhaust and catalytic systems are very hot and may burn you.

⚠ WARNING - Fire

- **Do not park, idle or drive the vehicle over or near flammable objects, such as grass, vegetation, paper, leaves, etc. A hot exhaust system can ignite flammable items under your vehicle.**
- **Also, do not remove the heat sink around the exhaust system, do not seal the bottom of the vehicle and do not coat the vehicle for corrosion control. It may present a fire risk under certain conditions.**

Your vehicle is equipped with a catalytic converter emission control device.

Therefore, the following precautions must be observed:

- Use only UNLEADED FUEL for gasoline engines.
- Do not operate the vehicle when there are signs of engine malfunction, such as misfire or a noticeable loss of performance.
- Do not misuse or abuse the engine. Examples of misuse are coasting with the ignition off and descending steep grades in gear with the ignition off.
- Do not operate the engine at high idle speed for extended periods (5 minutes or more).
- Do not modify or tamper with any part of the engine or emission control system. All inspections and adjustments must be made by an authorized Kia dealer.
- Avoid driving with an extremely low fuel level. Running out of fuel could cause the engine to misfire, damaging the catalytic converter.

Failure to observe these precautions could result in damage to the catalytic converter and to your vehicle. Additionally, such actions could void your warranties.

Specifications, Consumer information and Reporting safety defects

Dimensions 8-2
Engine 8-2
Bulb wattage 8-3
Tires and wheels 8-5
Gross vehicle weight 8-6
Luggage volume 8-7
Air conditioning system 8-7
Recommended lubricants and capacities 8-8
• Recommended SAE viscosity number 8-9
Vehicle identification number (VIN) 8-10
Vehicle certification label 8-11
Tire specification and pressure label 8-11
Engine number 8-11
Air conditioner compressor label 8-12
Reporting Safety Defects 8-13

DIMENSIONS

Item			Unit : mm (in)
Overall length			4,355 (171.4)
Overall width			1,805 (71.0)
Overall height	Without Roof rack		1,535 (60.4)
	With Roof rack		1,545 (60.8)
Tread	Front	205/60R16	1,565 (61.6)
		225/45R18 *	1,555 (61.2)
	Rear	205/60R16	1,579 (62.2)
		225/45R18 *	1,569 (61.8)
Wheelbase			2,700 (106.3)

* This tire is only for the HEV (Hybrid Electric Vehicle) system

ENGINE

Item	Gasoline
	Kappa 1.6L GDI
Displacement [cc (cu. in)]	1,580 (96.4)
Bore x Stroke [mm (in.)]	72 X 97 (2.8 X 3.8)
Firing order	1-3-4-2
No. of cylinders	4 In-line, DOHC

BULB WATTAGE

Light Bulb			Wattage (W)	Bulb type
Front	Headlamps (Low/High)	Bulb type	60	HB3
		LED type	LED	LED
	Headlamps (Low)		LED	LED
	Turn signal lamps	Bulb type	28	PY28/8W
		LED type	LED	LED
	Front side marker	Bulb type	5	W5W
		LED type	LED	LED
	Position lamps		LED	LED
	Daytime running lamps		LED	LED
	Fog lamps	Bulb type	51	HB4
		LED type	LED	LED
	Side repeater lamps		LED	LED
Rear	Stop/Tail lamps	Bulb type	28/8	P28/8W
		LED type	LED	LED
	Stop lamps		LED	LED
	Tail lamps	Bulb type	5	W5W
		LED type	LED	LED
	Turn signal lamps		27	PY27W
	Rear side marker	Bulb type	5	W5W
		LED type	LED	LED
	Back-up lamp		16	W16W
	License plate lamp		5	W5W
	High mounted stop lamp		LED	LED

(Continued)

(Continued)

Light Bulb			Wattage (W)	Bulb type
Interior	Map lamp	Bulb type	10	WEDGE
		LED type	LED	LED
	Vanity mirror lamps		5	FESTOON
	Room lamp	Bulb type	10	FESTOON
		LED type	LED	LED
	Tailgate lamp	Bulb type	10	FESTOON
		LED type	LED	LED

TIRES AND WHEELS

Item	Tire size	Wheel size	Load Capacity		Speed capacity		Inflation pressure [kPa (psi)]				Wheel lug nut torque [Kgf·m (lbf·ft, N·m)]
							Normal load *3		Maximum load		
			LI *1	Kg	SS *2	Km/h	Front	Rear	Front	Rear	
Full size tire	205/60 R16	6.5J X 16	92	630	H	210	250 (36)		250 (36)		11~13 (79 ~ 94, 107 ~ 127)
	225/45 R18 *4	7.5J X 18	91	615	V	240	250 (36)		250 (36)		
Compact Spare tire	T125/80 D16 *4	4T X 16	97	730	M	130	420 (60)		420 (60)		

*1: Load Index
*2: Speed Symbol
*3: Normal load : Up to 3 persons
*4: Only for Hybrid Electric Vehicle (HEV)

⚠ CAUTION

When replacing tires, use the same size originally supplied with the vehicle.
Using tires of a different size can damage the related parts or make them work irregularly.

✻ NOTICE

- **It is permissible to add 21 kPa (3 psi) to the standard tire pressure specification if colder temperatures are expected soon.**
  Tires typically loose 7 kPa (1 psi) for every -11°C (12°F) temperature drop. If extreme temperature variations are expected, re-check your tire pressure as necessary to keep them properly inflated.
- **We recommend that when replacing tires, use the same originally supplied with the vehicles. If not, that affects driving performance.**
- **When driving in high altitude grades, it is natural for the atmospheric pressure to decrease. Therefore, please check the tire pressure and add more air when necessary.**
  Additionally required tire air pressure per km above sea level: 10.5 kPa (1.5psi)/km

GROSS VEHICLE WEIGHT

For Hybrid

Item	Gasoline		
	Kappa 1.6L GDI		
	DCT		
	NIRO FE	NIRO	NIRO Touring
GVW	1,850 kg (4,079 lb.)	1,900 kg (4,189 lb.)	1,930 kg (4,255 lb.)

For Plug-in Hybrid

Item	Gasoline
	Kappa 1.6L GDI
	DCT
GVW	2,000kg (4,409 lb.)

LUGGAGE VOLUME

For Hybrid

Item		Volume
SAE	MIN.	635 liter
	MAX.	1,789 liter

For Plug-in Hybrid

Item		Volume
SAE	MIN.	548 liter
	MAX.	1,543 liter

Min : Behind rear seat to roof.
Max : Behind front seat to roof.

AIR CONDITIONING SYSTEM

Item	Weight of volume	Classification
Refrigerant	550 ± 10g	R-1234yf
Compressor lubricant	130 ± 10g	POE

Have your vehicle inspected by an authorized Kia dealer.

RECOMMENDED LUBRICANTS AND CAPACITIES

To help achieve proper engine and powertrain performance and durability, use only lubricants of the proper quality. The correct lubricants also help promote engine efficiency that results in improved fuel economy.

These lubricants and fluids are recommended for use in your vehicle.

Lubricant		Volume	Classification
Engine oil *1 *2 (drain and refill) Recommends TOTAL QUARTZ		3.8 liter (4.01 US qt.)	ACEA C5 or API Latest
Dual Clutch Transmission Fluid		1.6 ~ 1.7 liter (1.69 ~ 1.79 US qt.)	SAE 70W, API GL-4 (Recommended HK D DCTF TGO-10 (SK), SPIRAX S6 GHDE 70W DCTF (H.K.SHELL), 7 DCTF HKM (S-OIL))
Coolant		5.98 liter (6.31 US qt.)	Mixture of antifreeze and water (Ethylene glycol base coolant for aluminum radiator)
Inverter coolant		2.43 liter (2.56 US qt.)	Mixture of antifreeze and water (Ethylene glycol base coolant for aluminum radiator)
Brake fluid *3		402.6 ± 24.4 cc (0.425 ± 0.025 US qt.)	SAE J1704 DOT-4 LV, ISO4925 CLASS-6, FMVSS116 DOT-4
Engine clutch actuator fluid		100 ± 20 cc (0.105 ± 0.021 US qt.)	DOT 3 or DOT 4
Fuel	HEV	45 liter (47.5 US qt.)	Refer to Fuel requirements in chapter 1.
	PHEV	43 liter (45.4 US qt.)	

*1 : Refer to the recommended SAE viscosity numbers on the next page.

*2 : Engine oils labeled Energy Conserving Oil are now available. Along with other additional benefits, they contribute to fuel economy by reducing the amount of fuel necessary to overcome engine friction. Often, these improvements are difficult to measure in everyday driving, but in a year's time, they can offer significant cost and energy savings.

*3 : To maintain your vehicle's best brake and ABS/ESC performance, use Kia genuine brake fluid as in the specification.

Recommended SAE viscosity number

Engine oil viscosity (thickness) has an effect on fuel economy and cold weather operating (engine start and engine oil flowability). Lower viscosity engine oils can provide better fuel economy and cold weather performance; however, higher viscosity engine oils are required for satisfactory lubrication in hot weather. Using oils of any viscosity other than those recommended could result in engine damage. When choosing an oil, consider the range of temperature your vehicle will be operated in before the next oil change. Proceed to select the recommended oil viscosity from the chart.

Temperature Range for SAE Viscosity Numbers										
Temperature	°C	-30	-20	-10	0	10	20	30	40	50
	(°F)	-10	0	20	40	60	80	100	120	
Gasoline engine oil (Kappa 1.6L GDI)				10W-30						
		0/5W-20, 5W-30								

An engine oil displaying this API Certification Mark conforms to the international Lubricant Specification Advisory Committee (ILSAC). It is recommended to only use engine oils that uphold this API Certification Mark.

VEHICLE IDENTIFICATION NUMBER (VIN)

■ Frame number

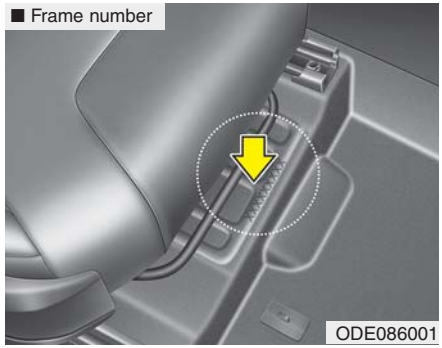

ODE086001

The vehicle identification number (VIN) is the number used in registering your vehicle and in all legal matters pertaining to its ownership, etc.

The number is punched on the floor under the passenger seat. To check the number, open the cover.

■ VIN label

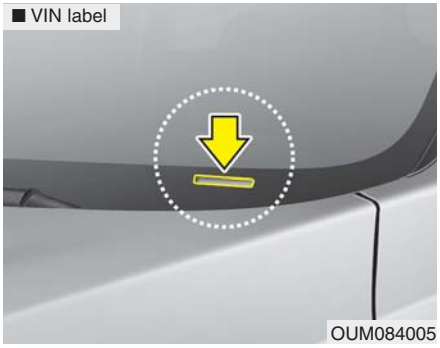

OUM084005

The VIN is also on a plate attached to the top of the dashboard. The number on the plate can easily be seen through the windshield from outside.

ODE078018N

The VIN is able to be found by a professional diagnostic equipment from the ECU. The diagnostic equipment is connected to OBD connector on the inner fuse panel. For more information, we recommend that you contact an authorized Kia dealer.

VEHICLE CERTIFICATION LABEL

The vehicle certification label attached on the driver's side center pillar gives the vehicle identification number (VIN).

TIRE SPECIFICATION AND PRESSURE LABEL

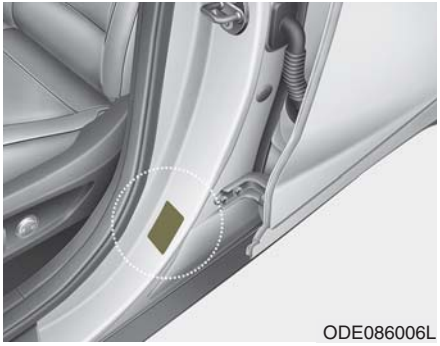

The tires supplied on your new vehicle are chosen to provide the best performance for normal driving.

The tire label located on the driver's side center pillar gives the tire pressures recommended for your vehicle.

ENGINE NUMBER

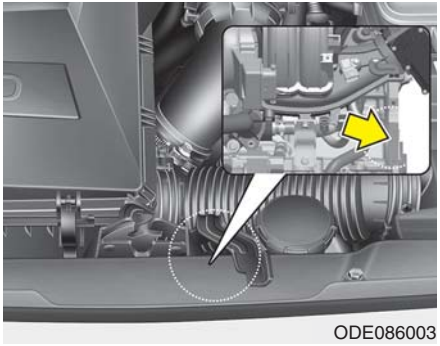

The engine number is stamped on the engine block as shown in the drawing.

AIR CONDITIONER COMPRESSOR LABEL

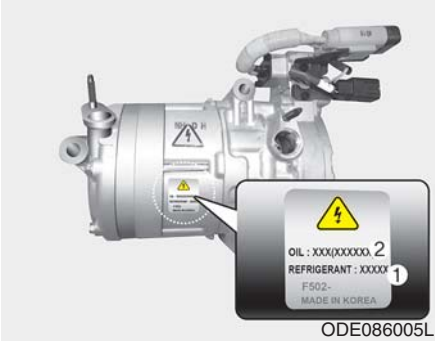

ODE086005L

A compressor label informs you the type of compressor your vehicle is equipped with such as model, supplier part number, production number, refrigerant (1) and refrigerant oil (2).

REPORTING SAFETY DEFECTS

If you believe that your vehicle has a defect which could cause a crash or could cause injury or death, you should immediately inform Transport Canada (TC) in addition to notifying **Kia Canada Inc..**

Mailing Address:
Transport Canada - ASFAD
330 Sparks Street
Ottawa, ON
K1A 0N5

Telephone: 819-994-3328 (Ottawa-Gatineau area or internationally)
Toll free: 1-800-333-0510 (in Canada)

Online:
http://www.tc.gc.ca/recalls

If TC receives similar complaints, it may open an investigation, and if it finds that a safety defect exists in a group of vehicles, it may order a recall and remedy campaign. However, TC cannot become involved in individual problems between you, your dealer, or **Kia Canada Inc..**

Index

A

Air bag - advanced supplemental restraint system 3-47
Adding equipment to or modifying your air bag-equipped vehicle 3-73
Air bag warning label 3-73
Air bag warning light 3-50
Curtain air bag 3-67
Driver's and passenger's front air bag 3-62
How does the air bag system operate? 3-48
Occupant Detection System (ODS) 3-54
Side air bag 3-65
SRS Care 3-72
SRS components and functions 3-51
Air cleaner 7-32
Filter replacement 7-32
Air conditioner compressor label 8-12
Air conditioning system 8-7
Appearance care 7-104
Exterior care 7-104
Interior care 7-110
Automatic climate control system 4-145
Automatic heating and air conditioning 4-146
Automatic ventilation 4-156
Checking the amount of air conditioner refrigerant and compressor lubricant 4-159
Climate control air filter 4-158
Manual heating and air conditioning 4-148
Recirculated air at washer fluid spray 4-157
Sunroof inside air recirculation 4-157
System operation 4-154

B

Battery (Plug-in Hybrid) 7-39
For best battery service 7-39
Recharging the battery 7-40
Reset items 7-41
Before driving 5-5
Before entering vehicle 5-5
Before starting 5-5
Necessary inspections 5-5
Blind-Spot Collision Warning (BCW) 5-79
System description 5-79
System setting and activation 5-80
Warning message and system control 5-82
Brake fluid 7-26
Checking the brake fluid level 7-26
Brake system 5-30
Anti-lock Brake System (ABS) 5-44
Auto hold 5-40
Electronic Parking Brake (EPB) 5-34
Electronic Stability Control (ESC) 5-46
Good braking practices 5-52
Hill-start Assist Control (HAC) 5-51
Parking brake – Foot type 5-32

Power brakes 5-30
Vehicle Stability Management (VSM). 5-50
Warning messages 5-42
Bulb wattage 8-3

C

Checking fluid levels 7-18
Child Restraint System (CRS) 3-35
Children always in the rear 3-35
Installing a Child Restraint System (CRS) 3-39
Selecting a Child Restraint System (CRS) 3-36
Climate control air filter 7-34
Filter inspection 7-34
Coolant 7-21
Changing the coolant 7-25
Checking the coolant level. 7-21
Engine coolant 7-22
Inverter coolant. 7-22
Recommended coolant 7-23
Cruise Control (CC) 5-98
Cruise control switch 5-99
To cancel cruise control 5-101
To decrease the cruising speed. 5-100
To increase cruise control set speed. 5-100
To resume cruising speed at more than approximately 30 km/h (20 mph) 5-102
To set cruise control speed. 5-99
To temporarily accelerate with the cruise control on. 5-101
To turn cruise control off 5-102

D

Declaration of Conformity 4-186
IC 4-186
Defroster 4-144
Rear window defroster 4-144
Dimensions 8-2
Door locks. 4-21
Child-protector rear door lock 4-25
Operating door locks from inside the vehicle 4-22
Operating door locks from outside the vehicle 4-21
Driver Attention Warning (DAW). 5-90
Leading vehicle departure alert 5-95
Low activity warning 5-90
Dual Clutch Transmission (DCT). 5-16
Dual clutch transmission operation 5-16
Good driving practices 5-25

E

Economical operation 5-142
Emergency starting 6-5
Before Jump Starting (For Hybrid) 6-5
Jump starting 6-8

Method to disconnect the (-) cable for regular maintenance (For Hybrid) 6-7
Push-starting 6-10
Emission control system 7-114
Crankcase emission control system 7-114
Evaporative emission control (including ORVR: Onboard Refueling Vapor Recovery) system. . . . 7-114
Exhaust emission control system 7-115
Engine 8-2
Engine clutch actuator fluid 7-28
Checking the engine clutch actuator fluid level. . . . 7-28
Engine compartment 2-6, 7-4
Engine number 8-11
Engine oil 7-19
Changing the engine oil and filter 7-20
Checking the engine oil level. 7-19
ENGINE START/STOP button 5-11
ENGINE START/STOP button position 5-11
Illuminated ENGINE START/STOP button 5-11
Starting the hybrid system 5-13
Explanation of scheduled maintenance items 7-15
Exterior features 4-180
Roof rack 4-180
Exterior overview 2-2

F

Folding key 4-4
Battery replacement 4-7
Immobilizer system 4-8
Key operations 4-4
Limp home (override) procedure 4-10
Record your key number 4-4
Transmitter precautions 4-6
Forward Collision-Avoidance Assist (FCA) (sensor fusion) 5-53
Brake operation 5-58
Detecting sensors (front view camera/front radar) . 5-58
FCA warning message and system control 5-56
Limitation of the system 5-62
System malfunction 5-60
System setting and activation. 5-53
Forward/Reverse Parking Distance Warning (PDW) . 4-124
Non-operational conditions of Forward/ Reverse Parking Distance Warning system 4-127
Operation of Parking Distance Warning system . . 4-125
Self-diagnosis 4-128
Fuel filler door (Hybrid) 4-36
Closing the fuel filler door. 4-37
Opening the fuel filler door 4-36
Fuel filler door (Plug-in hybrid) 4-38
Closing the fuel filler door. 4-39
Opening the fuel filler door 4-38

Fuel requirements 1-2
Do not use methanol 1-3
Fuel additives 1-4
Gasoline containing alcohol and methanol 1-2
Operation in foreign countries 1-4
Fuses 7-58
Engine compartment fuse replacement 7-61
Fuse/relay panel description. 7-64
Inner panel fuse replacement 7-59

G

Gross vehicle weight. 8-6

H

HEV/PHEV powertrain 1-5
Hood 4-34
Closing the hood 4-35
Opening the hood. 4-34

I

If An Accident Occurs 6-44
If the engine overheats 6-11
If the engine will not start 6-4
If engine doesn't turn over or turns over slowly 6-4
If engine turns over normally but does not start 6-4
If you have a flat tire (with spare tire) 6-19
Changing tires 6-20
Jack and tools. 6-19
Removing and storing the spare tire 6-20
If you have a flat tire (with Tire Mobility Kit). 6-28
Checking the tire inflation pressure. 6-36
Components of the Tire Mobility Kit 6-32
Distributing the sealant 6-35
Introduction 6-29
Notes on the safe use of the Tire Mobility Kit 6-30
Technical Data 6-38
Using the Tire Mobility Kit 6-33
Important safety precautions 3-2
Air bag hazards 3-2
Always wear your seat belt 3-2
Control your speed. 3-3
Driver distraction 3-2
Keep your vehicle in safe condition. 3-3
Restrain all children 3-2
In case of an emergency while driving. 6-3
If the engine stalls at a crossroad or crossing 6-3
If the engine stalls while driving 6-3
If you have a flat tire while driving 6-3
Infotainment system 4-182
Antenna 4-182
How vehicle radio works 4-183
USB port. 4-182

Instrument cluster 4-66
Dual clutch transmission shift indicator 4-74
Gauges 4-68
Instrument cluster control 4-68
Instrument panel overview 2-5
Interior features. 4-167
AC inverter 4-172
Air ventilation seat 4-169
Cargo security screen 4-179
Clothes hanger 4-177
Cup holder 4-167
Floor mat anchor(s) 4-177
Luggage net holder. 4-178
Power outlet 4-170
Seat warmer 4-167
Sunvisor 4-170
USB charger 4-171
Wireless smart phone charging system 4-173
Interior lights 4-140
Automatic turn off function 4-140
Liftgate room lamp. 4-142
Map lamp 4-140
Room lamp 4-141
Vanity mirror lamp 4-142
Interior overview. 2-4

K

Key positions 5-7
Ignition switch position 5-7
Illuminated ignition switch 5-7
Starting the hybrid system 5-9

L

Lane Following Assist (LFA) 5-125
LFA system malfunction 5-129
LFA system operation 5-126
Limitation of the system 5-130
Lane Keeping Assist (LKA) 5-70
Lane Keeping Assist system malfunction 5-76
LKA activation. 5-73
LKA system operation 5-72
System setting 5-72
LCD display 4-76
LCD display control. 4-76
LCD display modes 4-77
Trip modes (Trip computer). 4-89
Warning messages 4-94
Liftgate 4-26
Closing the liftgate 4-26
Emergency liftgate safety release. 4-27
Opening the liftgate 4-26

Light bulbs 7-86
Back-up lamp (Bulb type) bulb replacement 7-98
Bulb replacement precaution 7-86
Daytime running lamp/Position lamp (LED type) bulb replacement 7-93
Front fog lamp (Bulb/LED type) bulb replacement . 7-94
Front side marker (Bulb type) bulb replacement (Headlamp type A) 7-92
Front side marker (LED type) bulb replacement (Headlamp type B) 7-93
Front turn signal (LED type) bulb replacement (Headlamp type B) 7-93
Front turn signal lamp (Bulb type) bulb replacement (Headlamp type A) 7-91
Headlamp (High/Low beam) (Bulb type) bulb replacement (Headlamp type A) 7-90
Headlamp (High/Low beam) (LED type) bulb replacement (Headlamp type B) 7-92
High mounted stop lamp (LED type) bulb replacement 7-99
License plate lamp (Bulb type) bulb replacement . . 7-99
Liftgate room lamp (Bulb type) bulb replacement . 7-103
Liftgate room lamp (LED type) bulb replacement . 7-103
Light bulb position (Front) 7-87
Light bulb position (Rear) 7-88
Light bulb position (Side) 7-89
Map lamp (Bulb type) bulb replacement 7-100
Map lamp (LED type) bulb replacement 7-101
Rear side marker (Bulb type) bulb replacement . . . 7-96
Rear side marker (LED type) bulb replacement . . . 7-98
Room lamp (Bulb type) bulb replacement 7-102
Room lamp (LED type) bulb replacement 7-102
Side repeater lamp (LED type) bulb replacement . 7-100
Stop and tail lamp (LED type) bulb replacement . . 7-98
Stop and tail lamp, Rear turn signal lamp (Bulb type) bulb replacement 7-94
Tail lamp (inside) (Bulb type) bulb replacement . . . 7-95
Vanity mirror lamp (Bulb type) bulb replacement. 7-101
Lighting 4-129
Battery saver function 4-129
Check headlight 4-135
Daytime Running Light (DRL) 4-129
Front fog light 4-135
Headlight escort function 4-129
High Beam Assist (HBA) 4-132
High beam operation 4-131
Lighting control 4-130
Turn signals and lane change signals 4-134
Luggage volume 8-7

M

Maintenance services 7-5
Owner maintenance precautions 7-6
Owner’s responsibility 7-5

Mirrors 4-51
Inside rearview mirror 4-51
Outside rearview mirror 4-62

O

Owner maintenance 7-7
Owner maintenance schedule. 7-7

P

Parking brake 7-31
Checking the parking brake 7-31

R

Rear Cross-Traffic Collision Warning (RCCW). 5-132
System description 5-132
System setting and activation. 5-132
Warning message and system control 5-134
Rear View Monitor (RVM). 4-120
Recommended lubricants and capacities 8-8
Recommended SAE viscosity number. 8-9
Regenerative braking system 5-27
Regenerative Braking (Paddle Shifter) 5-27
Reporting Safety Defects 8-13
Reverse Parking Distance Warning (PDW) 4-121
Non-operational conditions of Reverse Parking Distance Warning system. 4-122
Operation of Reverse Parking Distance Warning system 4-121
Reverse Parking Distance Warning system precautions 4-123
Self-diagnosis. 4-123
Road warning 6-2
Hazard warning flasher 6-2

S

Scheduled maintenance service 7-9
Seat 3-4
Driver position memory system (for power seat) . . 3-10
Front seat adjustment - manual 3-7
Front seat adjustment - power (for driver’s seat). . . . 3-8
Headrest (for front seat). 3-12
Rear seat adjustment 3-15
Seatback pocket 3-15
Seat belts. 3-21
Care of seat belts 3-33
Pre-tensioner seat belt 3-29
Seat belt precautions 3-31
Seat belt restraint system 3-21

Smart Cruise Control (SCC) 5-103
Detecting Sensor (front view camera/front radar) . 5-116
Limitations of the system 5-119
Set SCC Reaction 5-111
Smart cruise control switch 5-103
To convert to cruise control mode 5-118
Vehicle to vehicle distance setting 5-111
When the lane ahead is clear 5-112
When there is a vehicle ahead of you in your lane . 5-113
Smart key 4-11
Battery replacement 4-15
Loss of the smart key 4-14
Mechanical key 4-14
Record your key number 4-11
Smart key function 4-11
Smart key immobilizer system 4-16
Smart key precautions 4-14
Special driving conditions 5-144
Driving at night 5-147
Driving in flooded areas 5-148
Driving in the rain 5-147
Driving off-road 5-148
Hazardous driving conditions 5-144
Highway driving 5-148
Reducing the risk of a rollover 5-144
Rocking the vehicle 5-146
Smooth cornering 5-146
Steering wheel 4-47
Electric Power Steering (EPS) 4-47
Heated steering wheel 4-49
Horn 4-50
Tilt and telescopic steering 4-48
Storage compartments 4-164
Center console storage 4-164
Glove box 4-164
Luggage box 4-166
Sunglass holder 4-165
Sunroof 4-42
Resetting the sunroof 4-45
Sliding the sunroof 4-43
Sunroof open warning 4-46
Sunshade 4-45
Tilting the sunroof 4-44

T

Theft-alarm system 4-18
Armed stage 4-18
Disarmed stage 4-20
Theft-alarm stage 4-19
Tire Pressure Monitoring System (TPMS) 6-13
Changing a tire with TPMS 6-17
Check tire pressure 6-13
Low tire pressure position telltale 6-15
Low tire pressure telltale 6-15

Tire specification and pressure label 8-11
Tires and wheels 7-42, 8-5
All season tires 7-54
Checking tire inflation pressure 7-43
Low aspect ratio tire 7-56
Radial-ply tires 7-55
Recommended cold tire inflation pressures 7-42
Snow tires 7-55
Summer tires 7-54
Tire care 7-42
Tire maintenance 7-47
Tire pressure 7-43
Tire replacement 7-46
Tire rotation 7-44
Tire sidewall labeling 7-47
Tire terminology and definitions 7-51
Tire traction 7-47
Wheel alignment and tire balance 7-45
Wheel replacement 7-46
Towing 6-39
Emergency towing 6-41
Removable towing hook 6-40
Towing service 6-39
Trailer towing 5-151

V

Vehicle break-in process 1-5
Vehicle certification label 8-11
Vehicle data collection and event data recorders 1-6
Vehicle identification number (VIN) 8-10
Vehicle load limit 5-152
Certification label 5-155
Tire and loading information label 5-152
Vehicle modifications 1-5
Vehicle weight 5-156
Base curb weight 5-156
Cargo weight 5-156
GAW (Gross Axle Weight) 5-156
GAWR (Gross Axle Weight Rating) 5-156
GVW (Gross Vehicle Weight) 5-156
GVWR (Gross Vehicle Weight Rating) 5-156
Vehicle curb weight 5-156

W

Warning and indicator lights 4-105
Indicator lights 4-114
Warning lights 4-105
Washer fluid 7-30
Checking the washer fluid level 7-30

Welcome system 4-143
Headlight (Headlamp) escort function. 4-143
Interior light 4-143
Pocket lamp 4-143
Windows 4-29
Power windows 4-30
Windshield defrosting and defogging. 4-160
Automatic climate control system 4-160
Defogging logic 4-161
Winter driving. 5-149
Carry emergency equipment 5-150
Change to "winter weight" oil if necessary 5-150
Check battery and cables 5-150
Check spark plugs and ignition system 5-150
Don't let ice and snow accumulate underneath . . . 5-150
Don't let your parking brake freeze 5-150
Snowy or icy conditions. 5-149
To keep locks from freezing. 5-150
Use approved window washer anti-freeze in system. 5-150
Use high quality ethylene glycol coolant. 5-150
Wiper blades 7-36
Blade inspection. 7-36
Blade replacement 7-36
Wipers and washers 4-136
Front windshield washers. 4-137
Rear window wiper and washer switch 4-138
Windshield wipers 4-136