ESCALADE
OWNER'S MANUAL

2027

NOT FOR RESALE

Contents

Introduction 1
Keys, Doors, and Windows 8
Seats and Restraints 41
Storage 102
Instruments and Controls 109
Lighting 143
Infotainment System 152
Climate Controls 183
Driving and Operating 189
Vehicle Care 308
Service and Maintenance 394
Technical Data 402
Customer Information 406
Reporting Safety Defects 416
OnStar 420
Connected Services 425
Index 429

Introduction

California Proposition 65 Warning

WARNING

Operating, servicing and maintaining a passenger vehicle or off-highway motor vehicle can expose you to chemicals including engine exhaust, carbon monoxide, phthalates, and lead, which are known to the State of California to cause cancer and birth defects or other reproductive harm. To minimize exposure, avoid breathing exhaust, do not idle engine except as necessary, service your vehicle in a well-ventilated area and wear gloves or wash your hands frequently when servicing your vehicle. For more information go to www.P65Warnings.ca.gov/passenger-vehicle.

©2026 General Motors LLC. All Rights Reserved.

NOT FOR RESALE

Introduction

The names, logos, emblems, slogans, vehicle model names, and vehicle body designs appearing in this manual including, but not limited to, GM, the GM logo, CADILLAC, the CADILLAC Emblem, and ESCALADE are trademarks and/or service marks of General Motors LLC, its subsidiaries, affiliates, or licensors.

For vehicles first sold in Canada, substitute the name "General Motors of Canada Company" for Cadillac Motor Car Division wherever it appears in this manual.

This manual describes features that may or may not be on the vehicle because of optional equipment that was not purchased on the vehicle, model variants, country specifications, features/applications that may not be available in your region, or changes subsequent to this publication's release, including changes in standard or optional content.

Refer to the purchase documentation relating to your specific vehicle to confirm the features.

Canadian Vehicle Owners

You can obtain a copy of this guide in French from your dealer, at www.helminc.com, or from the following address:

Propriétaires Canadiens

On peut obtenir un exemplaire de ce guide en français auprès du concessionnaire ou à l'adresse suivante:

Helm, Incorporated
Attention: Customer Service
47911 Halyard Drive
Plymouth, MI 48170
USA

Québec Consumer Protection Act Disclosure (Québec Customers Only)

Information regarding the availability of replacement parts, repair services, and information necessary to maintain or repair our products (applicable to Quebec consumers only).

Pursuant to the Consumer Protection Act (Québec) and the applicable regulation, General Motors of Canada Company does not guarantee the availability of replacement parts or repair services for its products, nor does it guarantee the availability of information necessary to maintain or repair its products. General Motors of Canada Company does offer access to certain automobile data for purposes of diagnostics, maintenance or repair in accordance with section 39.4 of the Consumer Protection Act (Québec).

Danger, Warning, and Caution

Warning messages found on vehicle labels and in this manual describe hazards and what to do to avoid or reduce them.

NOT FOR RESALE

⚠ Danger

Danger indicates a hazard with a high level of risk which will result in serious injury or death.

⚠ Warning

Warning indicates a hazard that could result in injury or death.

Caution

Caution indicates a hazard that could result in property or vehicle damage.

A circle with a slash through it is a safety symbol which means "Do not," "Do not do this," or "Do not let this happen."

Symbols

The vehicle has components and labels that use symbols instead of text. Symbols are shown along with the text describing the operation or information relating to a specific component, control, message, gauge, or indicator.

: Shown when the owner's manual has additional instructions or information.

: Shown when the service manual has additional instructions or information.

: Shown when there is more information on another page — "see page."

Vehicle Symbol Chart

Here are some additional symbols that may be found on the vehicle and what they mean. See the features in this manual for information.

: Air Conditioning System

: Air Conditioning Refrigerant Oil

: Airbag Readiness Light

: Antilock Brake System (ABS)

: Brake System Warning Light

: Dispose of Used Components Properly

: Do Not Apply High Pressure Water

: Engine Coolant Temperature

: Flame/Fire Prohibited

: Flammable

: Forward Collision Alert

: Fuse Block Cover Lock Location

: Fuses

: ISOFIX/LATCH System Child Restraints

: Keep Fuse Block Covers Properly Installed

: Lane Change Alert

: Lane Departure Warning

: Lane Keep Assist

: Malfunction Indicator Light

: Oil Pressure

: Park Assist

: Pedestrian Ahead Indicator

: Power

: Rear Cross Traffic Alert

: Registered Technician

: Remote Start

NOT FOR RESALE

: Risk of Electrical Fire

: Seat Belt Reminders

: Side Blind Zone Alert

: Stop/Start

: Tire Pressure Monitor

: Traction Control/StabiliTrak/Electronic Stability Control (ESC)

: Under Pressure

: Vehicle Ahead Indicator

NOT FOR RESALE

Instrument Panel Overview

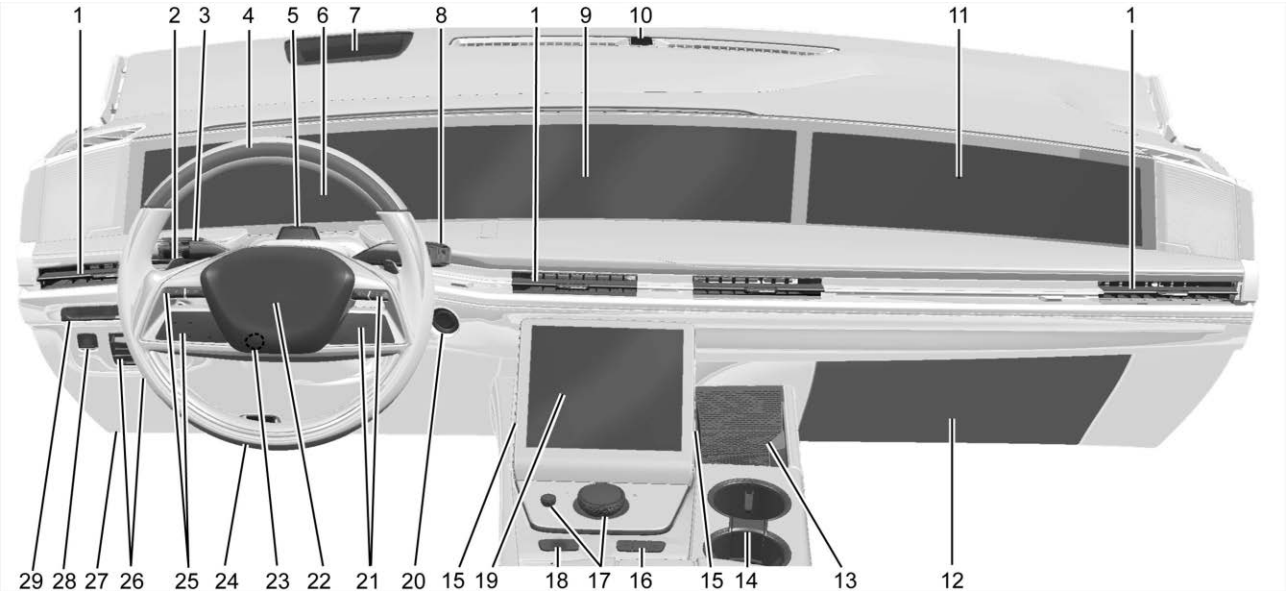

1. Air Vents. See *Air Vents* ⇨ *186*.
2. Tap Shift Controls. See *Manual Mode (Non V-Series)* ⇨ *214 Manual Mode (V-Series Only)* ⇨ *214*.
3. Turn Signal Lever. See *Turn and Lane-Change Signals* ⇨ *147*.

NOT FOR RESALE

Windshield Wiper/Washer. See *Windshield Wiper/Washer* ➪ *110*.

4. Super Cruise Light Bar. See *Super Cruise* ➪ *255*.
5. Driver Monitoring System Camera. See *Driver Attention Assist* ➪ *300*.
6. Instrument Cluster. See *Instrument Cluster* ➪ *117*.
7. Head-Up Display (HUD). See *Head-Up Display (HUD)* ➪ *137*.
8. Shift Lever. See *Automatic Transmission* ➪ *210*.
9. Infotainment Display. See *Using the System* ➪ *154*.
10. Light Sensor. See *Automatic Headlight System* ➪ *145*.
11. Passenger Display. See *Passenger Infotainment* ➪ *159*.
12. Glove Box. See *Glove Box* ➪ *102*.
13. Wireless Charging. See *Wireless Charging* ➪ *114*.
14. Cupholders. See *Cupholders* ➪ *102*.
15. USB Port. See *USB Port* ➪ *159*.
16. Climate Control Systems. See *Climate Control Systems* ➪ *183*.

    Stop/Start System. See *Stop/Start System* ➪ *206*.
17. Infotainment Controls. See *Overview* ➪ *153*.
18. Hazard Warning Flashers. See *Hazard Warning Flashers* ➪ *146*.
19. Center Console Display. See *Using the System* ➪ *154*.

    Climate Control Systems. See *Climate Control Systems* ➪ *183*.

    Lane Keep Assist. See *Lane Keep Assist (LKA)* ➪ *301*.

    Lane Change Alert. See *Lane Change Alert (LCA)* ➪ *294*.
20. ENGINE START/STOP Button. See *Ignition Positions* ➪ *204*.
21. Steering Wheel Controls. See *Steering Wheel Controls* ➪ *154*.
22. Horn. See *Horn* ➪ *110*.
23. Steering Wheel Adjustment. See *Steering Wheel Adjustment* ➪ *110*.
24. Hood Release. See *Hood* ➪ *310*.
25. Adaptive Cruise Control. See *Adaptive Cruise Control (Advanced)* ➪ *231*.

    Super Cruise. See *Super Cruise* ➪ *255*.

    Heated Steering Wheel. See *Heated Steering Wheel* ➪ *110*.

    Forward Collision Alert System. See *Forward Collision Alert (FCA) System* ➪ *284*.

    Hands-On Lane Centering Assist (If Equipped). See *Super Cruise* ➪ *255*.
26. Integrated Trailer Brake Control. See *General Towing Information* ➪ *306*.

    Instrument Panel Illumination Control (Out of view). See *Instrument Panel Illumination Control* ➪ *147*.
27. Data Link Connector (Out of View). See *Malfunction Indicator Light (Check Engine Light)* ➪ *122*.
28. Electric Parking Brake. See *Electric Parking Brake* ➪ *220*.
29. Driver Mode Control. See *Driver Mode Control* ➪ *224*.

    Four-Wheel Drive. See *Four-Wheel Drive* ➪ *215*.

NOT FOR RESALE

Air Suspension. See *Air Suspension* ⇨ *228*.

NOT FOR RESALE

Keys, Doors, and Windows

Keys and Locks
Keys 8
Remote Key 9
Remote Key Operation 9
Remote Start 14
Door Locks 15
Power Door Locks 17
Delayed Locking 18
Automatic Door Locks 18
Lockout Protection 18
Safety Locks 18
Digital Key 19

Doors
Door Operation (Power Doors) 21
Liftgate 23
Power Assist Steps 28

Vehicle Security
Vehicle Security 29
Vehicle Alarm System 29
Steering Column Lock 31
Immobilizer Operation 31

Exterior Mirrors
Convex Mirrors 32
Power Mirrors 32
Folding Mirrors 33
Heated Mirrors 34
Automatic Dimming Mirror 34
Reverse Tilt Mirrors 34

Interior Mirrors
Interior Rearview Mirrors 34
Automatic Dimming Rearview Mirror 34
Rear Camera Mirror 34

Windows
Windows 37
Power Windows 37
Sun Visors 38

Roof
Sunroof 38

Keys and Locks

Keys

⚠ Warning

Leaving children in a vehicle with a remote key is dangerous and children or others could be seriously injured or killed. They could operate the power windows or other controls or make the vehicle move. The windows will function with the remote key in the vehicle, and children or others could be caught in the path of a closing window. Do not leave children in a vehicle with a remote key.

NOT FOR RESALE

Use the mechanical key inside the remote key for all locks.

To remove the mechanical key, press the button on the side of the remote key near the bottom, and pull the mechanical key out. Never pull the mechanical key out without pressing the button.

The mechanical key may have a bar-coded key tag that the dealer or qualified locksmith can use to make new keys. Store this information in a safe place, not in the vehicle.

See your dealer if you need a replacement or additional key.

If it becomes difficult to turn a key, inspect the key blade for debris. Periodically clean with a brush or pick.

With an active OnStar or connected service plan, an OnStar Advisor may remotely unlock the vehicle. See *OnStar Overview* ⇨ *420*.

If locked out of the vehicle, see *Roadside Assistance Program* ⇨ *411*.

Remote Key

If your remote key is not working correctly:

- The remote key may be too far from the vehicle.
- Other vehicles or objects may be blocking the signal.
- The battery may need replacing. See “Battery Replacement” under *Remote Key Operation* ⇨ *9*.

If the remote key is still not working correctly after checking the distance, location, and battery, see your dealer or a qualified technician for service.

Remote Key Operation

The remote key operates various functions from up to 60 m (197 ft) away and includes a mechanical key for locks. See *Keys* ⇨ *8*.

NOT FOR RESALE

Functions

To view function settings, go to the infotainment home screen and select Settings > Vehicle > Remote Lock, Unlock, Start.

: Press to lock all doors and arm the alarm system. See *Vehicle Alarm System* ⇨ *29*. If enabled, the turn signals flash.

If you press when the driver door is open and the vehicle is on, all doors will lock and the driver door will immediately unlock.

: If enabled, press twice within five seconds and the turn signals flash and the horn sounds to confirm the vehicle is locked.

: Press once to unlock the driver door and fuel door and disarm the alarm system. See *Vehicle Alarm System* ⇨ *29*.

: Press twice within three seconds to unlock all doors.

If enabled, the turn signal lights flash twice to indicate the doors are unlocked. You can program the remote key to unlock all doors with one press or program the exterior lights to turn on. Follow the onscreen prompts in Settings.

x2 x2 : Press twice to open or close the liftgate. See *Liftgate* ⇨ *23*.

x2 : Press once to stop the liftgate motion.

x2 x2 : Press twice to open the liftglass.

: Press and release within one second to initiate the vehicle locator. The exterior lights flash and the horn sounds three times. Press and hold for at least three seconds to sound the panic alarm.

The horn sounds and the turn signals flash for about 30 seconds or until you press again or start the vehicle.

x2 x2 : Press twice from outside the vehicle to remote start. You cannot start the vehicle if a remote key is left inside. See *Remote Start* ⇨ *14*.

If equipped, you can operate the folding mirrors through the remote key. See *Folding Mirrors* ⇨ *33*.

If equipped, you can express-operate the windows through the remote key. See *Power Windows* ⇨ *37*.

Keyless Access Operation

The Keyless Access system allows you to access the doors and liftgate without removing the remote key from your pocket or bag. The remote key must be within 1 m (3 ft) of the liftgate or door being opened.

Keyless Unlocking

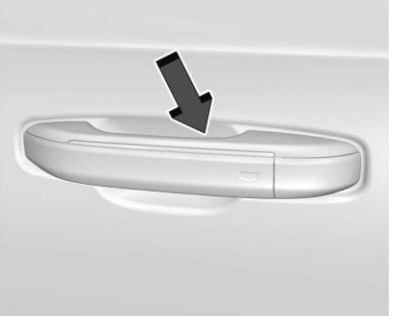

Squeeze the switch on the inside grip area of a door handle to open and unlock that door.

To program all doors to unlock when you squeeze the inside grip area of the driver door handle, on the infotainment home screen, select Settings > Vehicle > Remote Lock, Unlock, Start.

NOT FOR RESALE

Keyless Locking

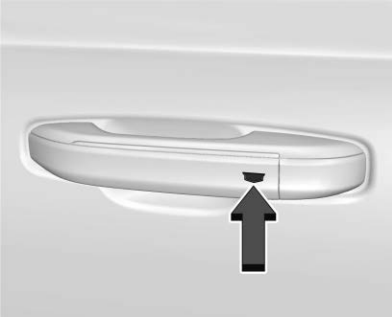

Touch the sensor on a front door handle to lock all doors.

Disable/Enable Keyless Unlocking of Exterior Door Handles and Liftgate

If equipped, you can disable and enable keyless unlocking of the exterior door handles and liftgate.

Disabling Keyless Unlocking:

With the vehicle off, press and hold 🔒 and 🔓 on the remote key at the same time for approximately four seconds. The turn signal lights flash four times quickly to indicate access is disabled. Using any exterior handle to unlock the doors or open the liftgate also causes the turn signal lights to flash four times quickly. If disabled, disarm the alarm system before starting the vehicle.

To program Disabling Keyless Unlocking, on the infotainment home screen, select Settings > Vehicle > Remote Lock, Unlock, Start.

Enabling Keyless Unlocking:

With the vehicle off, press and hold 🔒 and 🔓 on the remote key at the same time for approximately four seconds. The turn signal lights flash twice quickly to indicate access is enabled.

To program Enabling Keyless Unlocking, on the infotainment home screen, select Settings > Vehicle > Remote Lock, Unlock, Start.

Passive Locking

The vehicle locks several seconds after you close all doors, turn the vehicle off, and remove at least one or all remote keys from the interior. If other electronic devices interfere with the remote key signal, the vehicle may not detect the remote key inside the vehicle. If passive locking is enabled, the doors may lock with the remote key inside the vehicle. Do not leave the remote key in an unattended vehicle.

If equipped, the fuel door will also lock.

To view available settings from the infotainment home screen, touch Settings > Vehicle > Remote Lock, Unlock, Start.

Temporary Disable of Passive Locking

To temporarily disable passive locking, press and hold 🔓 on the interior door switch with a door open for at least four seconds, or until you hear three audible alerts. Passive locking remains disabled until you press 🔒 on the interior door or start the vehicle.

Mechanical Key Access

To access a vehicle with the mechanical key in case of a weak remote key battery, see *Door Locks* ⇨ *15*.

Remote Key Alerts

To view available settings for these alerts, on the infotainment home screen, select Settings > Vehicle > Remote Lock, Unlock, Start.

Wireless Charging Error: Placing the remote key on a wireless charger may prompt NO KEY FOUND on the Driver Information Center,

NOT FOR RESALE

and the vehicle may not start. Do not place the remote key on the wireless charger. See *Wireless Charging* ⇨ *114*.

Remote Key Removed From Vehicle Alert: If you turn the vehicle on with a door open, and then close all doors, the vehicle will check for remote keys or digital keys inside. If the vehicle does not detect a remote key or digital key, or you started the vehicle with only a key card present, the Driver Information Center displays NO KEY FOUND and the horn sounds three times. This occurs only once each time you drive the vehicle.

Remote Key Left in Vehicle Reminder: When you turn off the vehicle and leave a remote key inside, the horn sounds three times after you close all doors.

Other conditions can impact the performance of the remote key. See *Remote Key* ⇨ *9*.

Programming Remote Keys to the Vehicle

Only remote keys programmed to the vehicle will work. If a remote key is lost or stolen, a replacement can be purchased and programmed through your dealer. The vehicle can be reprogrammed so that lost or stolen remote keys no longer work. Any remaining remote keys will need to be reprogrammed. Each vehicle can have up to eight remote keys matched to it.

Starting the Vehicle with a Low Remote Key Battery

For improved vehicle security, the remote key is equipped with a motion sensor. If the remote key has been idle for an extended period, when you start the vehicle, the Driver Information Center may display KEY IN SLEEP MODE, MOVE KEY, THEN START. Move the remote key slightly and try starting the vehicle.

If the remote key battery is weak or if there is interference with the signal, when you start the vehicle, the Driver Information Center may display NO KEY FOUND, REPLACE BATTERY IN KEY or NO REMOTE KEY WAS DETECTED PLACE KEY IN KEY POCKET THEN START YOUR VEHICLE.

To start the vehicle:

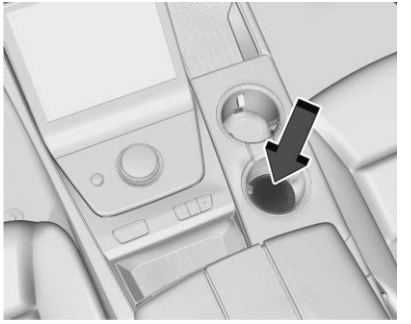

1. Place the remote key in the rear cupholder with the buttons facing down.
2. With the vehicle in P (Park) or N (Neutral), press the brake pedal and ENGINE START/STOP. Replace the remote key battery as soon as possible.

Battery Replacement

⚠ Warning

Never allow children to play with the remote key. The remote key contains a small battery, which can be a choking

(Continued)

NOT FOR RESALE

Warning (Continued)

hazard. If swallowed, internal burns can occur, resulting in severe injury or death. Seek medical attention immediately if a battery is swallowed.

⚠ Warning

To avoid personal injury, do not touch metal surfaces on the remote key when it has been exposed to extreme heat. These surfaces can be hot to the touch at temperatures above 59 °C (138 °F).

Caution

When replacing the battery, do not touch any of the circuitry on the remote key. Static from your body could damage the remote key.

Caution

Always replace the battery with the correct type. Replacing the battery with an incorrect type could potentially create a risk of battery explosion. Dispose of used batteries according to instructions and local laws. Do not attempt to burn, crush, or cut the used battery, and avoid exposing the battery to environments with extremely low air pressures or high temperatures.

Caution

If the remote key is not reassembled properly, liquids could enter the housing and damage the circuitry, resulting in a remote key malfunction and/or failure. To prevent damage, always follow the steps for remote key reassembly in this manual to ensure the remote key is sealed properly whenever the remote key is opened.

Replace the battery if the Driver Information Center displays REPLACE BATTERY IN REMOTE KEY. The battery is not rechargeable.

To replace the battery:

1. Press the button on the side of the remote key near the bottom and pull the mechanical key out. Never pull the mechanical key out without pressing the button.

NOT FOR RESALE

2. Use the mechanical key blade in the slot to remove the battery cover by hand.

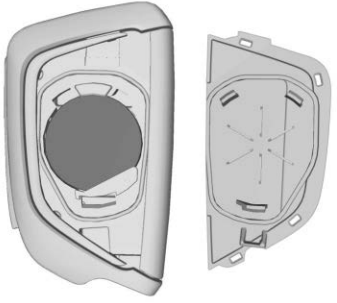

3. Remove the battery cover.
4. Pull the seal by pulling on the tab to access the battery.
5. Remove the old battery. Do not use a metal object.
6. Insert the new battery, positive side facing up. Only Panasonic CR2450 Lithium batteries have been validated to meet GM's minimum performance requirements.
7. Place the seal back into the groove around the battery compartment.
8. Replace the battery cover by snapping it back into the remote key.
9. Reinsert the mechanical key.

Remote Start

This feature allows the engine to be started from outside the vehicle.

(x2) **:** This button on the remote key is for remote start.

The following features may come on automatically when the vehicle is started remotely, if equipped, depending on the outside temperature:

- Climate control system.
- Rear defog and, if equipped, the heated and ventilated seats. See *Heated and Ventilated Front Seats* ➪ *50*. The rear defog indicator light does not turn on during a remote start.
- Heated steering wheel, if equipped. See *Heated Steering Wheel* ➪ *110*.

Laws restrict the use of remote starters in some areas. Be sure to check local regulations before using the remote starter.

Do not use remote start if the vehicle is low on fuel. The vehicle may run out of fuel.

The vehicle cannot be started remotely if:

- The remote key is inside the vehicle.
- The hood is open.
- There is an emission control system malfunction and the light is on.
- The ignition is in any mode other than off. See *Ignition Positions* ➪ *204*.
- The hazard warning flashers are on.
- The 30 minutes of engine run time timer has expired. See "Total Engine Run Time" later in this section.
- The vehicle is not in P (Park).

NOT FOR RESALE

The engine will turn off during a remote vehicle start if:

- The coolant temperature gets too high.
- The oil pressure gets too low.

The remote key range may be reduced while the vehicle is on.

Other conditions can affect the performance of the remote key. See *Remote Key* ➪ *9*.

Starting the Engine Using Remote Start

Press (x2) twice on the remote key. The turn signal lights will flash. The lights flash to confirm the request to remote start the vehicle has been received. During the remote start the parking lights will remain on as long as the engine is running.

The engine will shut off after 15 minutes or after the remainder of the 30 minute total running time is used, unless you stop the remote start before engine running has completed or the vehicle is turned on.

Press the brake pedal and turn the ignition on to drive the vehicle.

Total Engine Run Time

Remote start can be used for up to 30 minutes of total engine run time.

After two remote starts of 15 minutes, or multiple shorter time starts totaling 30 minutes have been used, the vehicle must be started and then turned off before the remote start can be used again.

Canceling a Remote Start

To cancel a remote start, do one of the following:

- Press (x2). The parking lights will turn off.
- Turn on the hazard warning flashers.
- Turn the ignition on and then off.

Door Locks

⚠ Warning

Unlocked doors can be dangerous.

(Continued)

Warning (Continued)

- Passengers, especially children, can easily open the doors and fall out of a moving vehicle. The doors can be unlocked and opened while the vehicle is moving. The chance of being thrown out of the vehicle in a crash is increased if the doors are not locked. So, all passengers should wear seat belts properly and the doors should be locked whenever the vehicle is driven.
- Do not pull the door handles while the vehicle is in motion. The door may open with only a single pull. Always use safety locks when children are in the rear seats. See *Safety Locks* ➪ *18*.
- Young children who get into unlocked vehicles may be unable to get out. A child can be overcome by extreme heat and can suffer permanent injuries or even death from heat stroke. Always lock the vehicle whenever leaving it.
- Outsiders can easily enter through an unlocked door when you slow down or stop the vehicle. Locking the doors can help prevent this from happening.

NOT FOR RESALE

To lock or unlock the doors from inside the vehicle:

- Press 🔒 or 🔓 on the power door lock switch. See *Power Door Locks* ⇨ *17*.
- The door handles are located on the door trim. Pull the rear door handles up once to unlock and again to open the doors. Slightly pull the front door handles up once to unlock and again to open the doors. If the front door handles are pulled fully up, the front doors will unlock and open with one pull. If the vehicle loses power, the doors can still be opened by fully pulling the handle on the door trim.

To lock or unlock the doors from outside the vehicle:

- Use the mechanical key in the driver door. The key cylinder is covered by a cap. See "Driver Door Key Lock Cylinder Access" later in this section.
- Press 🔒 or 🔓 on the remote key.
- Use the Keyless Access system. See *Remote Key Operation* ⇨ *9*.

Driver Door Key Lock Cylinder Access (In Case of Dead Battery)

To access the driver door key lock cylinder and unlatch the door:

1. Remove the mechanical key from the remote key.

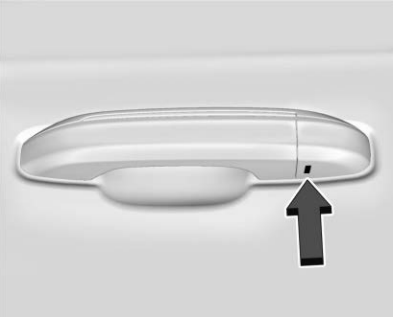

2. Insert the mechanical key into the slot at the bottom of the handle and push upward all the way until the cover frees. Do not pry or pull on the key.

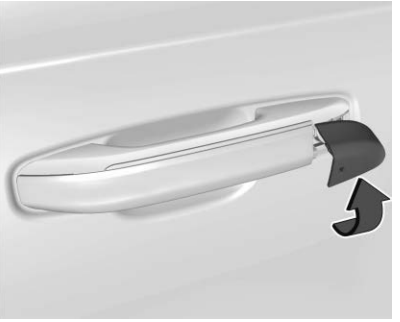

3. Remove the cover.

4. Insert the mechanical key in the cylinder.

NOT FOR RESALE

5. Turn the mechanical key clockwise until it stops.
6. Slowly turn the mechanical key counterclockwise while pulling the handle to unlatch the door.
7. Repeat Steps 4 and 5 if the door does not fully open.

To replace the cap:

1. Align the top edge of the cover to the handle.

2. Turn downward to snap cover into position.
3. Check to ensure cap is fully seated.

Free-Turning Locks

The door key lock cylinder turns freely when either the wrong key is used, or the correct key is not fully inserted. The free-turning door lock feature prevents the lock cylinder from being forced open. To reset the lock cylinder, ensure the correct key is fully inserted into the lock cylinder. Rotate the key until you feel the lock cylinder click back into place. Remove the key and reinsert fully, rotate the key to unlock the vehicle.

Opening a Power Door from the Exterior

If equipped, the doors can be power operated.

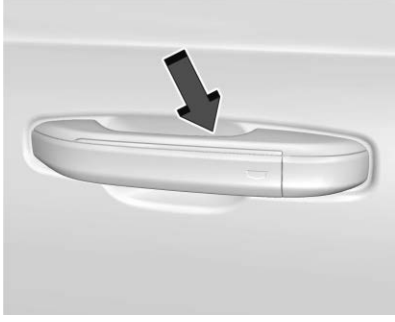

Squeeze the switch on the inside grip area of a door handle to power operate the door when the remote key is within range or when the vehicle is unlocked.

For more information on how to power operate the doors, see *Door Operation (Power Doors)* ⇨ *21*.

Power Door Locks

Press 🔒 or 🔓 on the remote key. See *Remote Key Operation* ⇨ *9*.

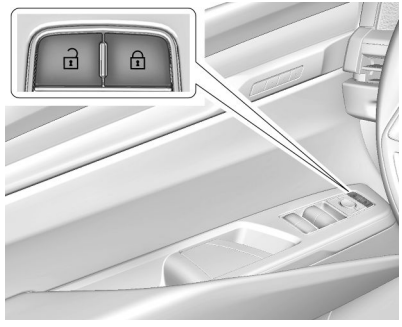

🔒 **:** Press to lock the doors. The indicator light in the switch will illuminate when locked.

🔓 **:** Press to unlock the doors.

NOT FOR RESALE

The fuel door is also locked or unlocked using these features.

Security Status Indicator

A light on the driver door near the window indicates the vehicle security status. See *Vehicle Alarm System* ⇨ *29*.

This light will be off any time the ignition is on, except momentarily when vehicle doors are locking.

Delayed Locking

This feature delays automatic door locking for five seconds after all doors are closed. While the feature is on, to request a delayed lock, press 🔒 on the power door lock switch while the vehicle is off and the door is open. An audible alert will sound three times to confirm the feature is active. If you reopen a door before the end of the five-second timer, the timer will reset when you close all doors again. To lock the doors immediately, press 🔒 on the door switch or remote key.

To view available settings from the infotainment screen, touch Settings > Vehicle > Doors & Locks.

Automatic Door Locks

The doors lock automatically when you close all the doors, turn the vehicle on, and shift out of P (Park).

If a door is unlocked, opened, and then closed, the doors will lock when you either remove your foot from the brake or drive faster than 13 km/h (8 mph).

To unlock the doors:

- Press 🔓 on the power door lock switch.
- Shift into P (Park).

Automatic door locking cannot be disabled. Automatic door unlocking can be disabled or programmed to unlock all doors or only the driver door. To view available settings from the infotainment home screen, select Settings > Vehicle > Doors & Locks.

Lockout Protection

This feature protects you from locking remote keys in the vehicle.

When you have locked the vehicle with the driver door open and turned the vehicle on or to accessory mode, all of the doors will lock and then the driver door will unlock.

When you have locked the vehicle with a door open, then turned the vehicle off and closed all doors, the vehicle will check for remote keys inside. If a remote key is detected and the number of remote keys inside has not reduced, the driver door will unlock and the horn will sound three times.

Press and hold 🔒 on the power door lock switch to manually override this feature.

Safety Locks

Child Safety Locks prevent passengers from opening the rear doors from inside the vehicle, as well as lock out motion for the second row seats. To adjust the second row seats in the vehicle, see *Second Row Seats* ⇨ *51*.

Select one of the following paths to access and activate/deactivate the Child Safety Locks from the front center display screen:

- Quick Controls > Child Safety Locks > On or Off
- Controls > Safety > Child Safety Locks > On or Off
- Controls > Doors > Child Safety Locks > On or Off

NOT FOR RESALE

- Controls > Doors & Windows > Child Safety Locks > On or Off

It is recommended to turn child safety locks on when a child restraint is present in the second row seats.

Rear Control Lock prevents rear passengers from using the rear center display screen.

Select one of the following paths to access and activate/deactivate the Rear Control Lock from the front center display screen:

- Controls > Safety > Rear Control Lock > On or Off
- Quick Controls > Rear Control Lock > On or Off

Digital Key

If equipped and enabled, the digital key feature allows you to access and operate the vehicle using a smart device. Many of the functions performed by a remote key can also be done using a digital key. See *Remote Key Operation* ⇨ *9*.

Bring your remote key to all service appointments at your dealer.

Digital key communicates with the vehicle using Ultrawide Band and Bluetooth Low Energy technology.

Only certain iPhone, Apple Watch, and Android operating systems support digital key. Please see the myCadillac app or www.cadillac.com/support to see if your smart device is compatible.

If the smart device battery is weak or if there is interference with the signal, the Driver Information Center may display NO KEY FOUND or NO REMOTE KEY WAS DETECTED, PLACE KEY IN KEY POCKET THEN START YOUR VEHICLE when starting the vehicle. Charge the smart device battery as soon as possible.

You can use the myCadillac mobile app and device Wallet to pair, manage, or delete your digital key.

If the digital key is not working:

- Check the distance. The smart device may be too far from the vehicle.
- Check the location. Other vehicles or objects may be blocking the signal. Your body could also impact the signal. Hold the smart device in your hand, away from your body, and toward the vehicle for best results.
- Check that the smart device is turned on and has sufficient battery power.
- Check the connection. Your smart device's Bluetooth connection must be enabled.
  - If it is enabled, try to turn Bluetooth off, then back on.
- Check that your smart device has the latest iOS or Android device operating system (OS) downloaded.
- Go to www.cadillac.com/support for additional support and frequently asked questions.

If the digital key still does not work, use the commands in your phone's Wallet or myCadillac app or the key card as a backup.

Bring your remote key and key card if you have the digital key serviced at your dealer.

Setting up Digital Key

Digital key is only available if you have accepted the OnStar terms and conditions.

1. Log in to your OnStar account in the myCadillac mobile app.
2. Select Controls > Keys, then follow the steps on your screen to pair your smart device.

NOT FOR RESALE

Using Your Digital Key

Digital key allows you to:

- Use passive entry with your smart device to lock and unlock the vehicle's doors, and access the rear compartments without a remote key.

  See "Keyless Access Operation" under *Remote Key Operation* ➪ *9*.
- Start the vehicle with just your digital key-enabled smart device present.
- Use remote commands in the device Wallet to lock, unlock, and remote start the vehicle.
- Share your digital key with up to three additional people across eight total devices.

Delete keys through the device Wallet or call an OnStar advisor for assistance.

Key Card

Caution
Placing the key card on the wireless charger may damage the card. If the key card is damaged, it may not unlock or start the vehicle. Do not place the key card on the wireless charger.

Your vehicle may be equipped with a key card that unlocks, locks, and starts the vehicle. The key card works by tapping it on the location of the vehicle shown on the back of the key card.

The key card is a back up to the digital key in case the smart device battery is weak or there is interference to the signal. Carry the key card at all times. Store the key card securely to prevent loss, theft, or damage. Do not write or punch holes into the key card.

Only key cards programmed to the vehicle will work. If you lose your key card or it is stolen, you can purchase and program a replacement through your dealer. To prevent lost or stolen key cards from being able to operate the vehicle, see your dealer. Bring your remote key and digital key if you have the key card serviced at your dealer.

Each vehicle can have up to eight key cards programmed to it.

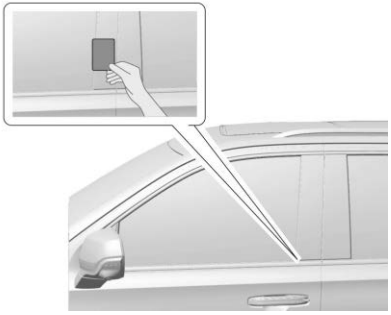

Unlocking with the Key Card

Tap your key card on the rectangular symbol on the driver door near the edge of the window to unlock the driver door. To program the key card to unlock all doors, see Settings > Vehicle > Remote Lock, Unlock, and Start > Remote Door Unlock.

Locking with the Key Card

With all doors closed, the vehicle off, and any door unlocked, tap your key card on the rectangular symbol on the driver door near the edge of the window to lock all doors.

NOT FOR RESALE

Starting with the Key Card

You can start your vehicle for a short period after unlocking it with your key card. If the period has ended, you will need to unlock the vehicle with the key card again to start your vehicle.

Doors

Door Operation (Power Doors)

⚠ Warning

Unlocked doors can be dangerous.

- Passengers, especially children, can easily open the doors and fall out of a moving vehicle. The doors can be unlocked and opened while the vehicle is moving. The chance of being thrown out of the vehicle in a crash is increased if the doors are not locked. So, all passengers should wear seat belts properly and the doors should be locked whenever the vehicle is driven.

(Continued)

Warning (Continued)

- Young children who get into unlocked vehicles may be unable to get out. A child can be overcome by extreme heat and can suffer permanent injuries or even death from heat stroke. Always lock the vehicle whenever leaving it.
- Outsiders can easily enter through an unlocked door when you slow down or stop the vehicle. Locking the doors can help prevent this from happening.

⚠ Warning

Always pay attention to your surroundings when using the power doors. The power doors system may not always detect small objects, objects on the edge, or objects outside of the field of view. The system also may not work correctly when the sensors are blocked, such as in adverse weather conditions. Keep your hands, feet, and other objects away from moving parts to avoid vehicle damage and personal injury.

If equipped and enabled with power doors, the doors are power assisted.

The Power Doors feature can be customized. To view available settings from the infotainment home screen, select Settings > Vehicle > Doors and Locks > Power Doors.

When Power Doors is set to “Manual,” the default state, the doors will not power open or close, and obstacle detection will be disabled.

If Power Doors are set to any setting other than “Manual,” the default state, pressing and holding the switch on the inside of the exterior handle while pulling will manually open the door and prevent automatic opening.

If a door is open, the power assist holds the door at the same position on flat ground or on an incline for some time, then deactivates and stops holding the door.

After a period of inactivity, the vehicle will enter sleep. Power assist for the doors will not be available during this time.

If electrical power is lost, fully pulling the interior release handle will unlatch the door and allow it to be manually opened the rest of the way. It may be more difficult to open the door without the power assist.

NOT FOR RESALE

Automatic power door operation is restricted within 100km of the Event Horizon Telescope - Large Millimeter Telescope in Mexico at coordinates 18 ∘ 59′ 8.62" N and 97 ∘ 18′ 53.32" W. This telescope is installed in the Sierra Negra-Pico de Orizaba Volcano. The frequency band 70 - 350 GHz is used for the operation of the GTM radio telescope in charge of INAOE. The GTM requires a zone of radio frequency silence of 100km around this area. When the vehicle is located within the quiet zone, set the Power Doors to "Manual".

Operating the Doors from Outside the Vehicle

Lock or unlock the doors by pressing 🔒 or 🔓 on the remote key. See *Remote Key Operation* ⇨ *9*.

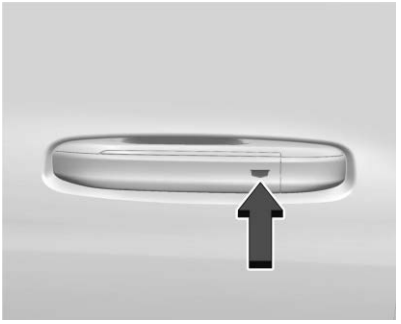

Touch the small Cadillac logo on the outside driver door handle to lock.

Operate the door by pressing and releasing the inside grip switch.

With power doors, if the door is in motion, press again to stop the door, or to close it if already opened and stopped.

Operating the Doors from Inside the Vehicle

To view available door open settings on the infotainment home screen, touch Settings > Vehicle > Doors and Locks > Power Doors.

Lock or unlock the doors by:

- Pressing the 🔒 or 🔓 switch above the interior door handle.
- Using the front or, if equipped, rear center console displays.
- Pressing 🔒 or 🔓 on the remote key. See *Remote Key Operation* ⇨ *9*.

Operate the doors by:

- Lightly pulling inside the handle. If the rear doors are locked, the first pull will unlock the doors and the second pull will open. In case of emergencies, you can pull the handle fully to mechanically release the latch to open the door.

NOT FOR RESALE

- If equipped and enabled with power doors, power operate the doors using the front or rear center console displays. The front center console display can open all doors individually or close all doors individually. If equipped, the rear center console display can open or close the rear doors.
- If equipped and enabled with power doors, pressing the brake pedal once to close the driver door. To view available settings from the infotainment home screen, select Settings > Vehicle > Doors and Locks.

If the door open/ajar and door service indicators appear on the Driver Information Center, there may be issues on the door preventing it from closing securely. Ensure the doors close securely and there are no obstacles in the door path.

Obstacle Detection

Caution

The sensors only detect objects within range of the door swing path. Always watch for external traffic, people, and

(Continued)

Caution (Continued)

other obstacles when operating the power doors to avoid vehicle damage and personal injury.

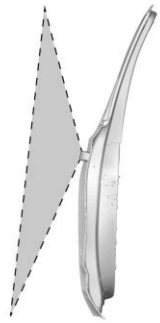

If equipped and enabled, a door will automatically stop if it detects an obstacle in its path during a power open cycle. The power door system cannot prevent a collision that is caused by an obstacle moving toward the door during a power open cycle. The sensors may not detect objects that are very close to (within 10 in (25 cm) of) the vehicle. If an obstacle is detected near the door or the door is blocked, a warning will be displayed on the center consoles to cautiously proceed in opening the door.

During opening and closing cycle, if the power door makes physical contact with an obstacle, the door will slightly reverse in the opposite direction.

In periods of heavy rain or extreme cold, system detection may be limited.

Obstacle Detection is disabled if Power Door settings are set to “Manual.”

Liftgate

⚠ Warning

Exhaust gases can enter the vehicle if it is driven with the liftgate or trunk/hatch open, or with any objects that pass through the seal between the body and the trunk/hatch or liftgate. Engine exhaust contains carbon monoxide (CO) which cannot be seen or smelled. It can cause unconsciousness and even death.

If the vehicle must be driven with the liftgate or trunk/hatch open:

(Continued)

NOT FOR RESALE

Warning (Continued)

- Close all of the windows.
- Fully open the air outlets on or under the instrument panel.
- Adjust the climate control system to a setting that brings in only outside air and set the fan speed to the highest setting. See “Climate Control Systems” in the Index.
- If the vehicle is equipped with a power liftgate, disable the power liftgate function.

See *Engine Exhaust* ⇨ *210*.

Caution

To avoid damage to the liftgate or liftgate glass, make sure the area above and behind the liftgate is clear before opening it.

Power Liftgate Operation

⚠ Warning

You or others could be injured if caught in the path of the power liftgate. Make sure there is no one in the way of the liftgate as it is opening and closing.

Caution

Driving with an open and unsecured liftgate may result in damage to the power liftgate components.

Caution

Manually forcing the liftgate to open or close during a power cycle can damage the vehicle. Allow the power cycle to complete.

The power liftgate switch is on the overhead console. The vehicle must be in P (Park).

The modes are:

MAX: Opens to maximum height.

3/4: Opens to a reduced height that can be set from 3/4 to fully open. Use to prevent the liftgate from opening into overhead obstructions such as a garage door or roof-mounted cargo. The liftgate can be manually opened all the way.

OFF: Opens manually only.

To power open or close the liftgate, select MAX or 3/4 mode and then:

- Press x2 twice on the remote key until the liftgate moves.

NOT FOR RESALE

- Press on the overhead console. The driver door must be unlocked or locked without the security armed.

- Press the emblem under the liftglass, after unlocking all doors. A locked vehicle can be opened if the remote key is within 1 m (3 ft) of the emblem.

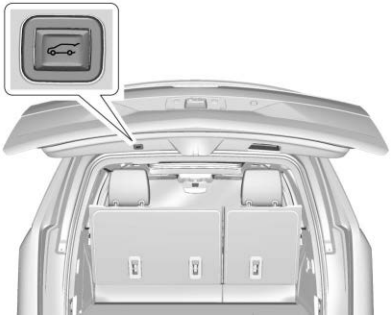

- Press on the bottom edge of the liftgate next to the latch to close.

Press any liftgate button, the emblem, or on the remote key while the liftgate is moving to stop it. Pressing any liftgate button or pressing twice on the remote key restarts the operation in the reverse direction. Pressing the emblem will restart the motion, but only in the opening direction.

The power liftgate may be temporarily disabled in extremely low temperatures, or after repeated power cycling over a short period of time. If this occurs, the liftgate can still be operated manually.

If the vehicle is shifted out of P (Park) while the power function is in progress, the liftgate will continue to completion. If the vehicle is accelerated before the liftgate has completed moving, the liftgate may stop or reverse direction. Check for Driver Information Center messages and make sure the liftgate is closed and latched before driving.

Falling Liftgate Detection

If the power liftgate automatically closes after a power opening cycle, it indicates that the system is reacting to excess weight on the liftgate or a possible support strut failure. A repetitive chime will sound while the falling liftgate detection feature is operating. Remove any excess weight. If the liftgate continues to automatically close after opening, see your dealer for service before using the power liftgate.

Interfering with the power liftgate motion or manually closing the liftgate too quickly after power opening may resemble a support strut failure. This could also activate the falling liftgate detection feature. Allow the liftgate to complete its operation and wait a few seconds before manually closing the liftgate.

NOT FOR RESALE

Obstacle Detection Features

If the liftgate encounters an obstacle during a power open or close cycle, the liftgate will automatically reverse direction and move a short distance away from the obstacle. After removing the obstruction, the power liftgate operation can be used again. If the liftgate encounters multiple obstacles on the same power cycle, the power function will deactivate. After removing the obstructions, manually close the liftgate. This will allow normal power operation functions to resume.

If the vehicle is locked while the liftgate is closing, and an obstacle is encountered that prevents the liftgate from completely closing, the horn will sound as an alert that the liftgate did not close.

Setting the 3/4 Mode

To change the position the liftgate stops at when opening:

1. Select MAX or 3/4 mode and power open the liftgate.
2. Stop the liftgate movement at the desired height by pressing any liftgate button. Manually adjust the liftgate position if needed.
3. Press and hold on the bottom edge of the liftgate next to the latch on the outside of the liftgate until the turn signals flash and a beep sounds. This indicates the setting has been recorded.

The liftgate cannot be set below a minimum programmable height. If there is no light flash or sound, then the height adjustment may be too low.

Manual Operation

Caution
Attempting to move the liftgate too quickly and with excessive force may result in damage to the vehicle.

Select OFF to manually operate the liftgate.

Operate the liftgate manually with a smooth motion and moderate speed. The system includes a feature which limits the manual closing speed to protect the components.

To open the liftgate, press on the power door lock switch or press on the remote key twice to unlock all doors, then press the emblem. Once opened, raise the liftgate using the handle on the interior bottom edge.

NOT FOR RESALE

Press the button above the license plate to open the liftglass, or press x2 twice on the remote key. Do not leave the liftglass open when raising the liftgate.

There will be a delay in the release of the liftglass if there is an attempt to open it while the rear wiper is in motion.

Use the pull cup to lower and close the liftgate. Do not press the emblem while closing the liftgate. This will cause the liftgate to be unlatched.

The liftgate can be opened when locked if the remote key is within 1 m (3 ft) of the emblem. See *Remote Key Operation* ⇨ *9*.

The liftgate has an electric latch. If the battery is disconnected or has low voltage, the liftgate will not open. The liftgate will resume operation when the battery is reconnected and charged.

Hands-Free Operation

If equipped, the liftgate may be opened with a remote key by entering the authentication zone from outside the approach zone. Both zones are located near the rear of the vehicle.

Entering the authentication zone with the remote key will sound a notification and the taillights will flash. The liftgate will open automatically if the remote key remains in the authentication zone for several seconds.

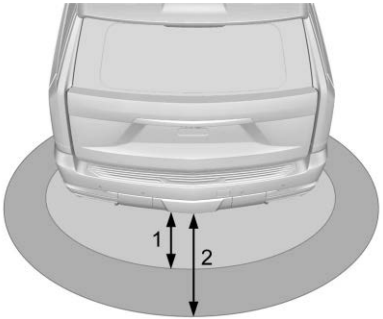

1. Authentication Zone (1 m (3 ft))
2. Approach Zone (3 m (9 ft))

To cancel the feature after entering the authentication zone, the user may step out of the authentication zone, press the Cadillac emblem, or perform a single press of the button. The hands-free feature will not operate while the liftgate is moving. To stop the liftgate while in motion, use any of the liftgate switches.

The hands-free feature can be deactivated. To turn on or off, from the infotainment home screen, select Settings > Vehicle > Comfort and Convenience > Hands-Free Exterior Storage Access.

For some vehicles, this feature can be turned on and off using the exterior liftgate switch while the remote key is in the authentication zone. To do this, press and hold the switch for five seconds. Upon successfully enabling or disabling the feature using this method, the vehicle taillights will flash.

Troubleshooting Hands-Free Operation

If there is a trailer attached to the vehicle but not connected to the electrical system, the Hands Free Liftgate will be disabled.

NOT FOR RESALE

If the feature does not operate, the remote key may be in a muted state. Press any button on the remote key or any exterior vehicle switch to unmute the remote key.

The feature will be unavailable until the remote key has been out of the approach zone for longer than 20 seconds if any of the following occur:

- After successfully opening the liftgate using the hands-free feature.
- If the key enters the approach zone but does not enter the authentication zone within a short period of time.
- If the user has cancelled the feature by using the remote key liftgate button, the exterior liftgate switch, or stepping out of the authentication zone for more than a few seconds.

The hands-free feature will not be active under these conditions:

- The feature is set to OFF in Settings > Vehicle > Comfort and Convenience > Hands-Free Exterior Storage Access.
- If the vehicle is equipped with the side approach feature, this rear closure hands-free operation may not work when the rear doors are open due to a conflict with other hands-free opening zones.
- Once you enter the approach zone, enter the authentication within eight seconds for the system to function properly. If you miss this window, step out of the approach zone and wait for 20 seconds before attempting the hands-free operation again.
- Vehicle battery is low.
- Power Liftgate is set to OFF
- If Power Liftgate is later re-enabled, hands-free operation will not automatically enable and must be re-enabled separately.
- A remote key is inside the vehicle.
- The vehicle is not in P (Park).
- The vehicle remains parked for more than several days, with no remote key use or Keyless Access operation. To re-enable, press any button on the remote key or open and close any vehicle door.

Power Assist Steps

⚠ Warning

To avoid personal injury or property damage, before entering or exiting the vehicle, be sure the power assist step is fully extended. Do not step on the power assist step while it is moving. Never place hands or other body parts between the extended power assist step and the vehicle.

If equipped, the power assist steps, when enabled, will extend when the door is opened. They will retract three seconds after the door is closed or immediately if the vehicle starts moving.

Disable the power assist steps before jacking or placing any object under the vehicle. Too much ice buildup may prevent deployment of the power assist steps. Check the step position before exiting the vehicle. If this happens, disable the power assist steps, clear the ice, then enable the assist steps and confirm normal function prior to use.

Keep hands, children, pets, objects, and clothing clear of the power assist steps when in motion. The steps will reverse direction if there

NOT FOR RESALE

is an obstruction. If possible, carefully remove the obstruction, then open and close the door on the same side to complete the motion. After obstacle detection, the boards will remain in their previous position (Extend/Stow) until another motion is requested. If the obstacle is not cleared and another motion is requested, the boards will make contact with the obstacle and then reverse to the previous position.

During automatic deployment, a warning will be displayed on the Driver Information Center (DIC) only when the running boards are obstructed.

Enable/Disable

The power assist steps can be enabled or disabled. To view available settings from the infotainment screen, touch Settings > Vehicle > Power Assist Steps.

Cleaning

The power assist steps can be extended or retracted for cleaning. To view available settings from the infotainment screen, touch Settings > Vehicle > Power Assist Steps.

Vehicle Security

This vehicle has theft-deterrent features, but is not theft-proof.

Vehicle Alarm System

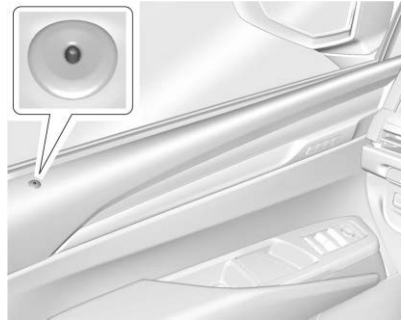

The light, on the driver door near the window, indicates the status of the system.

This light will be off any time the ignition is on, except momentarily when vehicle doors are locking.

Arming the Alarm System

1. Turn off the vehicle.
2. Lock the vehicle in one of three ways:
   - Use the remote key.
   - Use the Keyless Access system.
   - With a door open, press 🔒 on the interior of the door.
   - If equipped, locking a door with a mechanical key will not arm the alarm system.
3. After 30 seconds the alarm system will arm, and the indicator light will begin to slowly flash. If equipped, press 🔒 on the remote key a second time will bypass the 30-second delay and immediately arm the alarm system.

The alarm will be activated if a door, the rear access, or the hood is opened without first disarming the system. When the alarm is activated, the lights flash and the horn sounds. The alarm system will then re-arm to monitor for the next unauthorized event.

Disarming the Alarm System

To disarm the alarm system or turn off the alarm if it has been activated:

- Press 🔓 on the remote key.
- Unlock the vehicle using the Keyless Access system.

NOT FOR RESALE

- Start the vehicle.

To avoid setting off the alarm by accident:

- Lock the vehicle after all occupants have exited.
- Always use a remote key or Keyless Access system to unlock a door.
- If equipped, if you open the driver door without first unlocking with the remote key, the horn will sound and the lights will flash to indicate pre-alarm. If you do not start or unlock the door by door by pressing 🔓 on the remote key during the 10-second pre-alarm, the alarm will be activated.

How to Detect a Tamper Condition

If 🔓 is pressed on the remote key and the horn chirps three times, an alarm occurred previously while the alarm system was armed.

If the alarm has been activated, a message will appear on the Driver Information Center.

Power Sounder, Inclination Sensor, and Intrusion Sensor

In addition to the standard theft-deterrent system features, this system may also have a power sounder, inclination sensor, and intrusion sensor.

The power sounder provides an audible alarm which is distinct from the vehicle's horn. It has its own power source, and can sound an alarm if the vehicle's battery is compromised.

The inclination sensor can set off the alarm if it senses movement of the vehicle, such as a change in vehicle orientation.

The intrusion sensor monitors the vehicle interior, and can activate the alarm if it senses unauthorized entry into the vehicle's interior. Do not allow passengers or pets to remain in the vehicle when the intrusion sensor is activated.

Before arming the theft-deterrent system and activating the intrusion sensor:

- Make sure all doors and windows are completely closed.
- Secure any loose items such as a sunshades.
- Make sure there are no obstructions blocking the sensors in the front overhead console.
- Close DVD screens before leaving the vehicle.

Intrusion and Inclination Sensors Disable Switch

It is recommended that the intrusion and inclination sensors be deactivated if pets are left in the vehicle or the vehicle is being transported.

With the vehicle off, press in the front overhead console to turn off the feature.

NOT FOR RESALE

The indicator light may come on momentarily, or a message may display on the instrument cluster, indicating that these sensors have been disabled until the next time the alarm system is armed.

Steering Column Lock

If equipped, the steering column lock is a theft-deterrent feature that locks the steering column when you turn the vehicle off and the driver door is open, or when you open the driver door and then turn the vehicle off.

The steering column unlocks when you turn the vehicle on.

The Driver Information Center may display one of the following:

- Service Steering Column Lock: Indicates an issue with the column lock feature. Have vehicle serviced.
- Steering Column is Locked: Indicates the steering column lock is active and there is an abnormal situation.
- No message will appear when the steering column lock is active during a remote start.
- Turn Steering Wheel, Start Vehicle Again: Indicates the driver must turn the steering wheel and restart the vehicle because the column lock is binding, the column locking device was unable to unlock the steering column, and the vehicle did not start.

  If you are unable to unlock the steering column:

1. Immediately turn the steering wheel from side to side to unbind the column lock.
2. Turn the vehicle off and open the driver door to reset the system.
3. Immediately turn the vehicle on and immediately turn the steering wheel side to side for about 15 seconds. It may take significant force to unlock the column.

To keep the steering column from binding, straighten the front wheels before turning off the vehicle.

Immobilizer Operation

This vehicle has a passive theft-deterrent system.

The system does not have to be manually armed or disarmed.

The vehicle is automatically immobilized when the vehicle is turned off.

The immobilization system is disarmed when the ignition is turned on or to accessory mode and a valid remote key is present in the vehicle.

The security light, in the instrument cluster, comes on if there is a problem with arming or disarming the theft-deterrent system.

The system has one or more remote keys matched to an immobilizer control unit in the vehicle. Only a correctly matched remote key will start the vehicle. If the remote key is ever damaged, you may not be able to start your vehicle.

When trying to start the vehicle, the security light may come on briefly.

If the engine does not start and the security light stays on, there is a problem with the system. Turn the ignition off and try again.

NOT FOR RESALE

If the vehicle will not change ignition modes (accessory mode, on, off), and the remote key appears to be undamaged, try another remote key. Or, you may try placing the remote key in the backup location. See *Remote Key Operation* ⇨ *9*.

If the ignition modes will not change with the other remote key or in the backup location, the vehicle needs service. If the ignition does change modes, the first remote key may be faulty. See your dealer.

It is possible for the immobilizer system to learn new or replacement remote keys. Up to eight remote keys can be programmed for the vehicle. To program additional remote keys, see "Programming Remote Keys to the Vehicle" under *Remote Key Operation* ⇨ *9*.

Do not leave the remote key or device that disarms or deactivates the theft-deterrent system in the vehicle.

Exterior Mirrors

Convex Mirrors

⚠ Warning

A convex mirror can make things, like other vehicles, look farther away than they really are. If you cut too sharply into the right lane, you could hit a vehicle on the right. Check the inside mirror or glance over your shoulder before changing lanes.

The passenger side mirror is convex shaped. A convex mirror surface is curved so more can be seen from the driver seat.

Power Mirrors

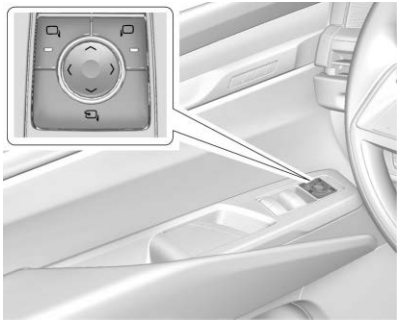

To adjust each mirror:

1. Press ◀ or ▶ for the driver or passenger side mirror. The indicator light will illuminate.
2. Press the arrows on the control pad to move the mirror in the desired direction.
3. Adjust each outside mirror so that a little of the vehicle and the area behind it can be seen.
4. Press ◀ or ▶ again to deselect the mirror.

NOT FOR RESALE

Memory Mirrors

The vehicle may have memory mirrors. See *Memory Seats* ⇨ *47*.

Lane Change Alert (LCA)

The vehicle may have LCA. See *Lane Change Alert (LCA)* ⇨ *294*.

Folding Mirrors

Power Folding Mirrors

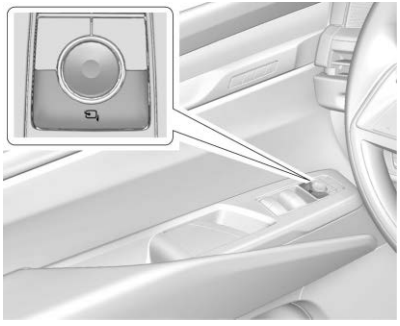

If equipped, press to power fold the mirrors. Press again to unfold.

The outside mirrors may automatically unfold when the vehicle is driven above 20 km/h (12 mph), but may be folded with the power folding mirror switch. If the vehicle speed is driven above 40 km/h (25 mph), they may automatically unfold and may not be refolded with the power folding mirror switch.

Resetting the Power Folding Mirrors

Reset the power folding mirrors if:

- The mirrors are accidentally obstructed while folding.
- They are accidentally manually folded/unfolded.
- The mirrors do not stay in the unfolded position.
- The mirrors vibrate at normal driving speeds.

Fold and unfold the mirrors one time using the mirror controls to reset them to their normal position. A noise may be heard during the resetting of the power folding mirrors. This sound is normal after a manual folding operation.

Remote Mirror Folding

If equipped with power folding mirrors and the mirrors have been folded with the power folding mirror switch, they may not be automatically unfolded.

If equipped with power folding mirrors and the mirrors have not been folded with the power folding mirror switch and the vehicle is in P (Park), they may be automatically folded/unfolded as follows:

1. If doors are locked by pressing on the remote key, the mirrors will fold. If doors are unlocked by pressing on the remote key, the mirrors will unfold. See *Remote Key Operation* ⇨ *9*.
2. If doors are locked by pressing the door handle lock/unlock button, the mirrors will fold. If doors are unlocked by pressing the door handle button, the mirrors will unfold. See “Keyless Unlocking/Locking from the Driver Door” in *Remote Key Operation* ⇨ *9*.
3. If passive locking is enabled and doors are locked by that feature, the mirrors will fold. See “Passive Locking” in *Remote Key Operation* ⇨ *9*.

NOT FOR RESALE

To view available settings for this feature, on the infotainment home screen, select Settings > Vehicle > Comfort and Convenience.

Heated Mirrors

If equipped with Heated Mirrors:

REAR : Press to heat the mirrors.

See “Rear Window Defogger” under *Climate Control Systems* ⇨ *183*.

If equipped, when the vehicle is started remotely during cold temperatures, the rear window defogger and heated mirrors will automatically turn on.

Automatic Dimming Mirror

If equipped, the driver outside mirror automatically adjusts for the glare of the headlights from behind. This feature comes on when the vehicle is started.

Reverse Tilt Mirrors

If equipped with reverse tilt mirrors and memory seats, the passenger and/or driver mirror tilts to a preselected position when the vehicle is in R (Reverse). This allows the curb to be seen when parallel parking.

The mirror(s) may move from their tilted position when:

- The vehicle is shifted out of R (Reverse) or remains in R (Reverse) for about 30 seconds.
- The vehicle is turned off.
- The vehicle is driven in R (Reverse) above a set speed.

To view available settings from the infotainment app screen, touch Settings > Vehicle > Comfort and Convenience.

Interior Mirrors

Interior Rearview Mirrors

Adjust the rearview mirror for a clear view of the area behind your vehicle.

Do not spray glass cleaner directly on the mirror. Use a soft towel dampened with water.

Automatic Dimming Rearview Mirror

The rearview mirror automatically dims to reduce the glare of the headlights from behind. This feature comes on when the vehicle is started.

Rear Camera Mirror

⚠ Warning

The Rear Camera Mirror (RCM) has a limited view. Portions of the road, vehicles, and other objects may not be seen. Do not drive or park the vehicle using only this camera. Objects may appear closer than they are. Check the outside mirrors or glance over your shoulder when making lane changes or merging. Failure to use proper care may result in injury, death, or vehicle damage.

If equipped, this automatic dimming mirror provides a wide angle camera view of the area behind the vehicle.

NOT FOR RESALE

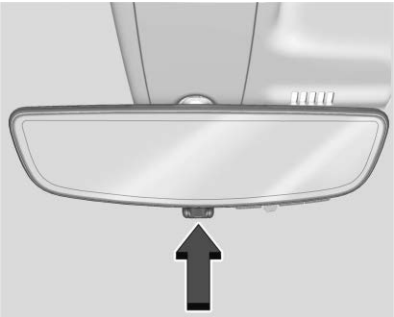

Pull the tab to turn on the display. Push the tab to turn it off. When off the mirror is automatic dimming. Adjust the mirror for a clear view of the area behind the vehicle while the display is off.

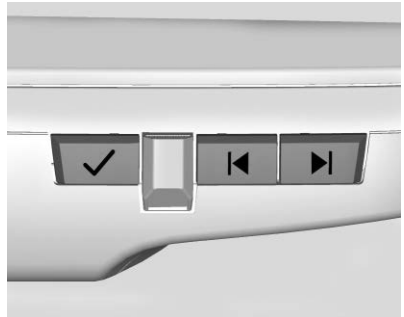

Press ✓ to scroll through the adjustment options.

Press |◀ and ▶| to adjust the settings using the indicators on the mirror. The indicators will remain visible for five seconds after the last button activation, and the settings will remain saved.

The adjustment options are:

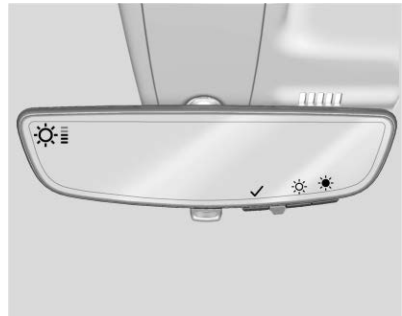

- Brightness

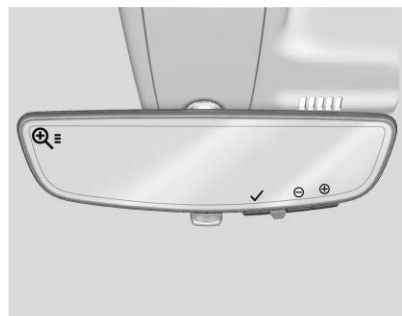

- Zoom

NOT FOR RESALE

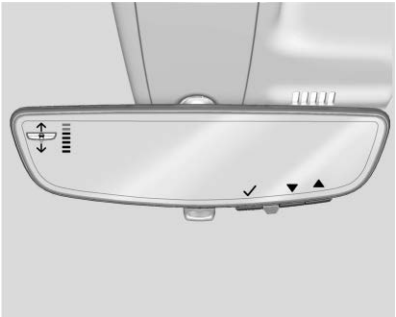

- Tilt

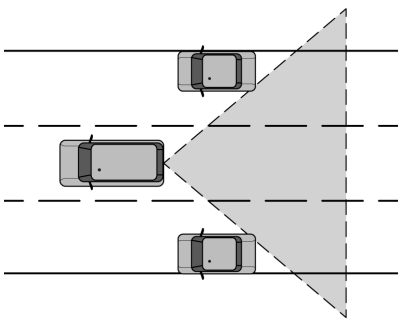

Troubleshooting

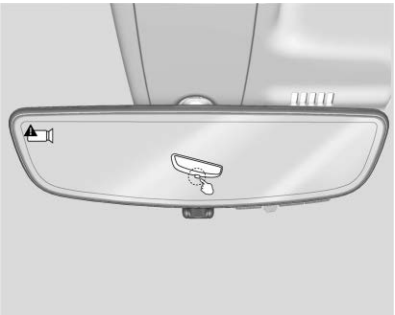

See your dealer for service if a blue screen and ⚠ are displayed in the mirror, and the display shuts off. Also, push the tab as indicated to return to the automatic dimming mode.

The Rear Camera Mirror may not work properly or display a clear image if:

- There is glare from the sun or headlights. This may obstruct objects from view. If needed, push the tab to turn off the display.

- Dirt, snow, or other debris blocks the camera lens. Clean the lens with a soft damp cloth, or, if equipped, with the Rear Camera Washer. See *Rear Window Wiper/Washer* ⇨ *112*.
- The camera's mounting on the vehicle has been damaged, and/or the position or the mounting angle of the camera has changed.

NOT FOR RESALE

Windows

⚠ Warning

Never leave a child, a helpless adult, or a pet alone in a vehicle, especially with the windows closed in warm or hot weather. They can be overcome by the extreme heat and suffer permanent injuries or even death from heat stroke.

The vehicle aerodynamics are designed to improve fuel economy. This may result in a pulsing sound when either rear window is down and the front windows are up. To reduce the sound, open either a front window or the sunroof, if equipped.

Power Windows

⚠ Warning

Children could be seriously injured or killed if caught in the path of a closing window. Never leave the remote key in a vehicle with children. When there are children in the rear seat, use the window lockout switch to prevent operation of the windows. See *Keys* ➪ *8*.

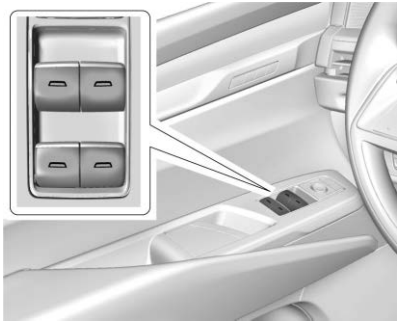

The power windows work when the vehicle is on, in accessory mode, or when Retained Accessory Power is active. See *Retained Accessory Power (RAP)* ➪ *209*.

Using the window switch, press to open or pull to close the window.

The windows may be temporarily disabled if they are used repeatedly within a short time.

Window Lockout

This feature prevents the rear seat passengers from opening the rear windows.

If equipped, to enable or disable this feature from the infotainment home screen, select Controls > Power Window Lockout.

Window Express Movement

This feature allows you to open all windows fully without holding the switches down. Press the switch down fully, then release to express open the window.

If equipped, pull the window switch up fully and quickly release to express close the window.

Briefly press or pull the window switch in the same direction to stop the window's express movement.

NOT FOR RESALE

Window Automatic Reversal System

If equipped, the window automatic reversal system reverses and stops window movement if it detects an object in its path. Extreme cold or ice may cause the window to auto-reverse. The window will operate normally after the object or condition is removed.

Automatic Reversal System Override

⚠ Warning

If automatic reversal system override is active, the window will not reverse automatically. You or others could be injured and the window could be damaged. Before using automatic reversal system override, make sure that all people and obstructions are clear of the window path.

If conditions prevent the window from closing, when the vehicle is on, override the automatic reversal system by pulling and holding the window switch.

Programming the Power Windows

If the battery is disconnected or discharged, programming may be necessary. To program an express-close window:

1. Close all doors.
2. Turn the vehicle on.
3. Partially open the window you want to program, then close it and continue to pull the switch briefly after the window has fully closed.
4. Open the window and continue to press the switch briefly after the window has fully opened.

Remote Window Operation

If equipped and enabled, this feature allows you to open all the windows remotely.

To view available settings and enable Remote Window Operation, from the infotainment home screen, touch Settings > Vehicle > Remote Lock, Unlock, Start.

To open the windows remotely, press twice and hold 🔓 on the remote key.

If equipped, you can close all windows using the remote key. To close all windows remotely, press twice and hold 🔒 on the remote key.

Sun Visors

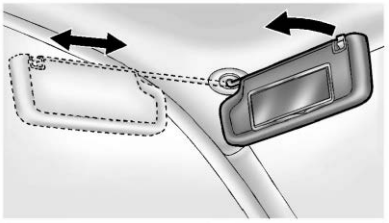

The driver and passenger sun visors block direct sunlight and reduce glare. If equipped, detach and pivot from the center mount to the side window, or extend along the rod for better coverage.

If equipped, swing the visor downward to access card holders or the vanity mirror.

Roof

Sunroof

If equipped, the vehicle must be on or in accessory mode, or Retained Accessory Power (RAP) must be active to operate the sunroof. See *Retained Accessory Power (RAP)* ⇨ *209*.

NOT FOR RESALE

While the sunroof always operates in express mode, movement can be stopped by pressing the switch again.

The sunroof cannot be opened or closed if the vehicle has an electrical failure.

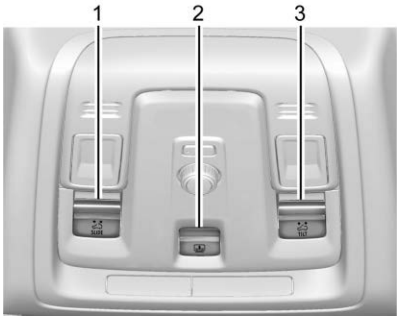

1. SLIDE Switch
2. Power Sunshade Switch
3. TILT Switch

Sunroof Operation:

- Press and release (1) to express-open to the fully open position. This vehicle may be equipped with a comfort stop position to prevent excessive wind noise. The sunroof will stop approximately halfway open during an express open. To fully open the sunroof, press and release (1) again.
- Pull and release (1) to express-close.
- Press or pull (1) again to stop at the desired location.

Sunshade Operation:

- Press and release (2) to express-open.
- Pull and release (2) to express-close.
- Press or pull (2) again to stop at the desired location.

Sunroof Vent Operation:

- Press and release (3) to vent the sunroof.
- Pull and release (3) to close the sunroof vent.

Automatic Reversal System

The sunroof and power sunshade, if equipped, have an automatic reversal system that is only active when the sunroof and power sunshade are operated in express-close mode.

If an object is in the path while express-closing, the reversal system will detect an object, stop, and open the sunroof or power sunshade slightly.

If this condition occurs, attempt to remove the object, then pull and release the switch to express close. If the reversal occurs multiple times, the DIC message OPEN THEN CLOSE SUNROOF will display, and express is disabled. To operate sunroof while express is disabled, the switch must be either pressed or pulled and held.

NOT FOR RESALE

Dirt and debris may collect on the sunroof seal or in the track. This could cause an issue with sunroof operation or noise. It could also plug the water drainage system. Periodically open the sunroof and remove any obstacles or loose debris. Wipe the sunroof seal and roof sealing area using a clean cloth, mild soap, and water. Do not remove grease from the sunroof.

NOT FOR RESALE

Seats and Restraints

Head Restraints
Head Restraints 42

Front Seats
Power Seat Adjustment 44
Reclining Seatbacks 45
Lumbar Adjustment 46
Massage 47
Memory Seats 47
Heated and Ventilated Front Seats 50

Rear Seats
Rear Seat Reminder 51
Second Row Seats 51
Heated and Ventilated Rear Seats 59
Third Row Seats 59

Seat Belts
Seat Belts 62
Buckle To Drive 63
How to Wear Seat Belts Properly 64
Lap-Shoulder Belt 66
Seat Belt Use During Pregnancy 69
Seat Belt Extender 69
Safety System Check 70
Seat Belt Care 70
Replacing Seat Belt System Parts After a Crash 70

Airbag System
Airbag System 71
Where Are the Airbags? 72
When Should an Airbag Inflate? 73
What Makes an Airbag Inflate? 74
How Does an Airbag Restrain? 74
What Will You See After an Airbag Inflates? 75
Passenger Sensing System 76
Servicing the Airbag-Equipped Vehicle 79
Adding Equipment to the Airbag-Equipped Vehicle 80
Airbag System Check 80
Replacing Airbag System Parts After a Crash 81

Child Restraints
Older Children 81
Infants and Young Children 83
Child Restraint Systems 85
Where to Put the Restraint 87
Lower Anchors and Tethers for Children (LATCH System) 89
Replacing LATCH System Parts After a Crash 96
Securing Child Restraints (With the Seat Belt in the Rear Seat) 96
Securing Child Restraints (With the Seat Belt in the Front Passenger Seat) 98

NOT FOR RESALE

Head Restraints

The front seats have adjustable head restraints in the outboard seating positions.

⚠ Warning

With head restraints that are not installed and adjusted properly, there is a greater chance that occupants will suffer a neck/spinal injury in a crash. Do not drive until the head restraints for all occupants are installed and adjusted properly.

If your vehicle has rear head restraints that fold down, always return them to the full upright position whenever an occupant is seated in the seat.

Adjust the head restraint so that the top of the restraint is at the same height as the top of the occupant's head. This position reduces the chance of a neck injury in a crash.

Front Seats

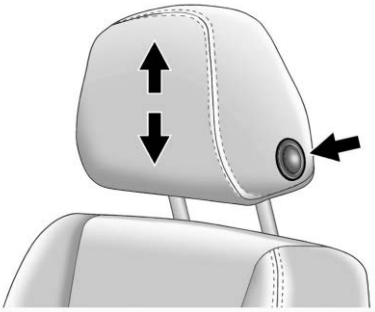

The height of the head restraint can be adjusted.

To raise or lower the head restraint, press the button located on the side of the head restraint and pull up or push the head restraint down, and release the button. After releasing the button, ensure the head restraint locks in place and is unable to move up or down.

The front seat outboard head restraints are not removable.

NOT FOR RESALE

Second Row Seats

Non Executive Seats

The non executive second row head restraints are designed to be folded.

When folding the second row seatbacks down, the head restraint will automatically fold out of the way as the seat is folded down.

The head restraint can be folded forward to allow for better visibility when the rear seat is unoccupied.

To fold the head restraint, press the button on the side of the head restraint.

The head restraint will fold forward automatically.

When an occupant or child restraint is in the seat, always return the head restraint to the full upright position. Pull the head restraint up and push it rearward until it locks into place. Push and pull on the head restraint to make sure that it is locked.

The second row head restraints are not removable.

Executive Seats

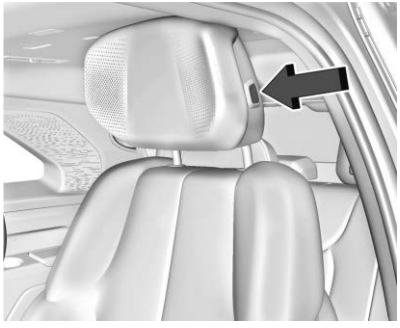

Executive second row seats have adjustable head restraints. To raise/lower the head restraint/headrest, press the button located on the side of the head restraint, and push the head restraint up/ down. After releasing the button, ensure the head restraint locks in place and is unable to move up or down.

Always adjust the head restraint so that the top of the restraint is at the same height as the top of the occupant's head.

The second row head restraints are not removable.

Third Row Seats

The third row seats have head restraints in the outboard seating positions that cannot be adjusted.

The third row outboard head restraints are not removable.

The third row outboard head restraints are designed to be folded.

When folding the third row seatbacks down, the head restraint will automatically fold out of the way as the seat is folded down.

The head restraint can be folded forward to allow for better visibility when the rear seat is unoccupied.

NOT FOR RESALE

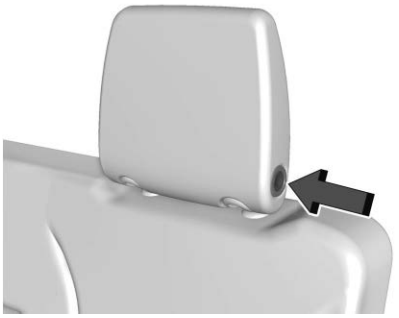

To fold the head restraint, press the button on the side of the head restraint.

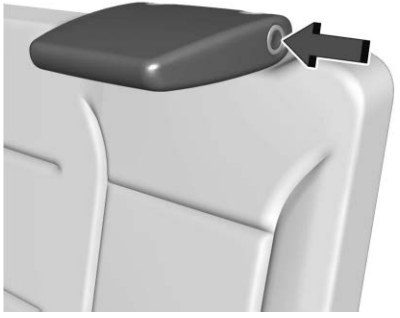

The head restraint will fold forward automatically.

When an occupant or child restraint is in the seat, always return the head restraint to the full upright position. Push the head restraint up and rearward until it locks into place. Push and pull on the head restraint to make sure that it is locked.

Front Seats

Power Seat Adjustment

⚠ Warning

You can lose control of the vehicle if you try to adjust a driver seat while the vehicle is moving. Adjust the driver seat only when the vehicle is not moving.

⚠ Warning

The power seats will work with the ignition off. Children could operate the power seats and be injured. Never leave children alone in the vehicle.

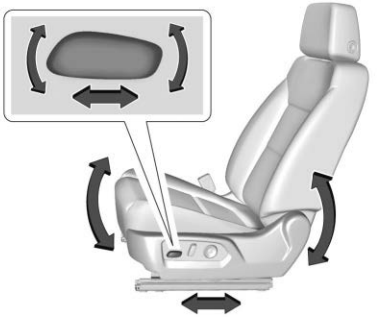

To adjust the seat:

- Move the seat forward or rearward by sliding the control forward or rearward.
- If equipped, raise or lower the front part of the seat cushion by moving the front of the control up or down.
- Raise or lower the seat by moving the rear of the control up or down.

The seats can also be adjusted from the front center display screen, if equipped.

- Touch > Position and then select the desired adjustment on the seat image.
- To adjust executive rear seats, if equipped, select Rear Right or Rear Left.

NOT FOR RESALE

If you do not take action within 30 seconds, you may need to reselect the seat you want to adjust.

Warning

If equipped, the second row passenger can create more legroom by moving the front passenger seat with controls located on the rear center display screen. To prevent serious injury or death in a crash, do not permit a rear seat passenger to move the front seat if someone is seated there. Disable the controls by activating Rear Control Lock from the front center display screen.

To adjust the front passenger seat from the rear center display screen, select > Position > Right > .

To activate the Rear Control Lock on the front center display screen to prevent second row passengers from using the rear center display screen, select > Safety > Rear Control Lock.

Reclining Seatbacks

Warning

Sitting in a reclined position when the vehicle is in motion can be dangerous. Even when buckled up, the seat belts cannot do their job.

The shoulder belt will not be against your body. Instead, it will be in front of you. In a crash, you could go into it, receiving neck or other injuries.

The lap belt could go up over your abdomen. The belt forces would be there, not at your pelvic bones. This could cause serious internal injuries.

For proper protection when the vehicle is in motion, have the seatback upright. Then sit well back in the seat and wear the seat belt properly.

To recline the seatback:

- Tilt the top of the control rearward to recline.
- Tilt the top of the control forward to raise.

NOT FOR RESALE

Do not have a seatback reclined if the vehicle is moving.

To recline the seat with the front center display screen:

- Select > Position and touch the seat image.

Lumbar Adjustment

- Press and hold the front or rear of the control to increase or decrease lumbar support.
- If equipped, press and hold the top or bottom of the control to raise or lower lumbar support.

Uplevel Seat Adjustment

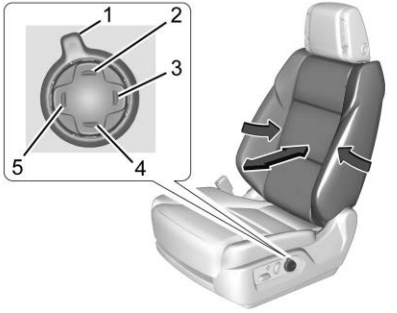

To adjust lumbar support, if equipped:

- Press and release or hold Feature Select (1) to scroll to lumbar support on the front center display screen.
- Press Forward (5) or Rearward (3) to adjust lumbar forward or rearward.
- Press Up (2) or Down (4) to adjust lumbar up or down.

Bolster Support

To adjust bolster support, if equipped:

NOT FOR RESALE

Press and release or hold Feature Select (1) to scroll to bolster support on the front center display screen. Press Forward (5) or Rearward (3) to adjust bolster support inward or outward.

Upper Shoulder Support

To adjust upper shoulder support, if equipped:

- Press and release or hold Feature Select (1) to scroll to upper shoulder support on the front center display screen.
- Press Forward (5) or Rearward (3) to adjust shoulder support forward or rearward.

Massage

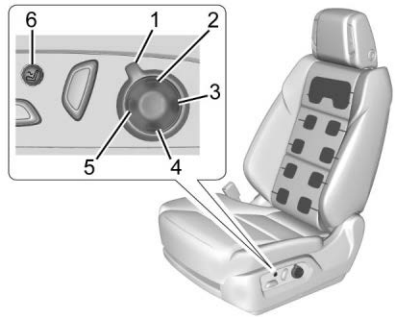

Driver Seat Shown, Passenger Seat Similar

If equipped, the vehicle must be on to use the massage feature.

To activate and adjust massage using the Feature Select (1) control:

- Turn the Feature Select (1) to activate the massage screen on the front center display screen.
- To turn massage off or to activate massage at last massage type settings, press the massage On/Off control (6).

To activate and adjust the massage feature from the front center display screen, if equipped:

- Touch > Massage and then select the desired adjustment on the seat image.
- To adjust executive rear seats, if equipped, select Rear Right or Rear Left.

The massage feature will turn off after approximately 20 minutes. Press the massage On/Off control (6) to restart the massage feature.

Memory Seats

NOT FOR RESALE

If equipped, drivers can save their unique driving positions and a shared exit position using the memory seat feature.

If equipped, drivers can also save other feature position settings, such as the power mirrors, the power steering wheel, and Head-Up Display.

Identifying Driver Number

The vehicle uses the remote key number 1 and 2 to identify the current driver. The Driver Information Center welcome message, "You are driver x for memory recalls," identifies the current remote key number. This message appears the first few times the vehicle is turned on with a different remote key. To ensure Seat Entry Memory works properly, save positions to the 1 or 2 memory button that match the driver number in the welcome message. To help identify remote key IDs, carry only one remote key when entering the vehicle. If the welcome message does not display, perform the following steps:

1. Move all remote keys away from the vehicle.
2. Start the vehicle on with another remote key. A Driver Information Center welcome message should display indicating the driver number of the other remote key. Turn the vehicle off and remove the other remote key from the vehicle.
3. Start the vehicle on with the initial remote key. The Driver Information Center welcome message should display the driver number of the initial remote key.

Saving Seating Positions

Read these instructions completely before saving memory positions.

To save preferred driving positions to 1 and 2:

1. Start the vehicle or accessory mode. A Driver Information Center welcome message may indicate the driver number of the current remote key. See "Identifying Driver Number" previously in this section.
2. Adjust all available memory features to the desired driving position.
3. Press and release SET; an audible alert will sound.
4. Immediately upon releasing SET, press and hold memory button 1 or 2 matching the current driver's remote key number until two audible alerts sound. If too much time passes between releasing SET and pressing 1 or 2, the two audible alerts will not sound indicating memory position were not saved. Repeat Steps 3 and 4 to try again.
5. Repeat Steps 1–4 for the other remote key 1 or 2 using the other 1 or 2 memory button.

If you are the only driver, you can save the preferred driving positions to both 1 and 2.

To save the common exit seating position to that is used by all drivers for Manually Recalling Seating Positions and Auto Seat Exit Memory Recall features, repeat Steps 1–4 using , the exit button.

Center Display Screens

The seat positions can also be adjusted and saved from the center console display. Select on the display, select the Position tab, then select and hold the desired position type.

Manually Recalling Seating Positions

To recall the positions previously saved, press and hold 1, 2, or button until the recall is complete.

NOT FOR RESALE

Manual Memory recall movement for 1, 2 or buttons may be initiated and will complete to the saved memory position if the vehicle is in or out of P (Park).

Enabling Automatic Recalls

- Seat Entry Memory moves the driver seat to the selected 1 or 2 position when the vehicle is started. Select Settings > Vehicle > Seating Position > Seat Entry Memory > ON or OFF. See "Auto Seat Entry Memory Recall" later in this section.
- Seat Exit Memory moves the driver seat to the preferred exit position of the button when the vehicle is turned off and the door is opened. Select Settings > Vehicle > Seating Position > Seat Exit Memory > ON or OFF. See "Auto Seat Exit Memory Recall" later in this section.
- The other feature position settings will be stored and recalled with memory seats.

Auto Seat Entry Memory Recall

Seat Entry Memory will automatically begin movement to the seating positions of the 1 or 2 button corresponding to the driver's remote key number 1 or 2 detected by the vehicle when:

- The vehicle is turned on.
- Seating positions have previously been saved to the same 1 or 2 button. See "Saving Seating Positions" previously in this section.
- Seat Entry Memory is enabled. See "Enabling Automatic Recalls" previously in this section.
- The vehicle is in P (Park).
- The other feature position settings will be stored and recalled with memory seats.

If the saved memory seat position does not automatically recall, verify the recall is enabled. See "Enabling Automatic Recalls" previously in this section.

If the memory seat recalls to the wrong position, the driver's remote key number 1 or 2 may not match the memory button number positions they were saved to. Try the other remote key or try saving the positions to the other 1 or 2 memory button. See "Saving Seating Positions" previously in this section.

Automatic Seat Entry Memory recalls are only available for driver's remote key numbers 1 and 2. Remote keys 3–8 will not provide Seat Entry Memory recalls.

Auto Seat Exit Memory Recall

Seat Exit Memory will begin movement to the seating position of the button when:

- The driver turns off the vehicle and opens the door within a short time.
- A seating position has previously been saved to the memory button. See "Saving Seating Positions" previously in this section.
- Seat Exit Memory is enabled. See "Enabling Automatic Recalls" previously in this section.
- The vehicle is in P (Park).

Seat Exit Memory is not linked to the driver's remote key. The seating position saved to is used for all drivers.

Cancel Memory Seating Recalls

- During any memory recall:

  Press a power seat control

  Press SET memory button

  Press the power mirror control pad

  If equipped, press the power tilt and telescoping steering wheel control switch

NOT FOR RESALE

- During Manual memory recall:

  Release 1, 2, or memory button
- During Auto Seat Entry Memory Recall:

  Turn the vehicle off

  Press SET, 1, 2, or memory buttons
- During Auto Seat Exit Memory Recall:

  Press SET, 1, 2, or memory buttons

Obstructions

If something has blocked the seat while recalling a memory position, the recall may stop. Remove the obstruction and try the recall again. If the memory position still does not recall, see your dealer.

Heated and Ventilated Front Seats

Warning

If temperature change or pain to the skin cannot be felt, the seat heater may cause burns. To reduce the risk of burns, use care when using the seat heater, especially for long periods of time. Do not place anything

(Continued)

Warning (Continued)

on the seat that insulates against heat, such as a blanket, cushion, cover, or similar item. This may cause the seat heater to overheat. An overheated seat heater may cause a burn or may damage the seat.

Heated and Ventilated Seat Switches

If equipped, the heated and ventilated seat switches are on the front center display screen.

To operate, the engine must be running. Select > Temperature and touch one of the following icons:

: Select to heat the driver or passenger seatback. When a heated seat is turned on, the icon is red.

: Select to heat the driver or passenger seatback and cushion. When a heated seat is turned on, the icon is red.

: Select, if available, to ventilate the driver or passenger seat. A ventilated seat has a fan that circulates air through the seat. The air is not cooled. When a ventilated seat is turned on, the icon is blue.

Select the icon once for the highest setting. With each selection, the seat will change to the next lower setting, and then to off.. The indicator lights next to the icons indicate three for the highest setting and one for the lowest. If the heated seats are on high, the level may automatically be lowered after approximately 30 minutes.

The passenger seat may take longer to heat up.

Auto Heated and Ventilated Seats

When the vehicle is on, this feature, if enabled, will automatically activate the heated or ventilated seats at the level required by the vehicle's interior temperature.

The active high, medium, low, or off heated or ventilated seat level will be indicated by the seat icons on the front center display screen. Use the seat icon on the display to turn auto heated or ventilated seats off. If the passenger seat is unoccupied, the auto heated or ventilated seats feature will not activate that seat. To enable or disable auto heated or ventilated seats, select Settings > Vehicle > Climate and Air Quality > Cooled/Ventilated or Heated Seats on Startup > ON or OFF.

NOT FOR RESALE

Remote Start Heated and Ventilated Seats

During a remote start, the heated or ventilated seats, if equipped, can be turned on automatically. When it is cold outside, the heated seats turn on, and when it is hot outside the ventilated seats turn on. If the auto heated or ventilated seats feature, if equipped, is not turned on, the heated or ventilated seats may be canceled when the vehicle is turned on. If necessary, select the seat icon to use the heated or ventilated seats after the vehicle is started.

The heated or ventilated seat indicator lights may turn on during a remote start.

The temperature performance of an unoccupied seat may be reduced. This is normal.

To enable or disable remote start heated or ventilated seats, select Settings > Vehicle > Remote Lock, Unlock, and Start > Remote Start Auto Heated Seats or Remote Start Auto Cooled/Ventilated Seats > ON or OFF. See *Remote Start* ⇨ *14*.

Rear Seats

Rear Seat Reminder

If equipped and enabled, the Driver Information Center displays a REAR SEAT REMINDER LOOK IN REAR SEAT message under certain circumstances. This message indicates there may be an item or passenger in the rear seat. Check the rear seat before exiting the vehicle.

Opening a second row door while the vehicle is on or up to 10 minutes before the vehicle is on, activates the feature. When the vehicle is turned off, the Driver Information Center message and an audible alert activate. The alert does not directly detect objects in the rear seat; instead, it detects when a rear door is opened and closed under certain conditions, indicating that there may be something in the rear seat.

The feature activates only once each time the vehicle is turned on and off. Reactivate it by opening and closing the second row doors. An alert may occur even when there is nothing in the rear seat; for example, if a child enters the vehicle through the rear door and leaves without the vehicle being shut off.

From the infotainment app screen, select Settings > Vehicle > Rear Seat Reminder to turn the feature on or off.

Second Row Seats

Executive Seat Features

Executive seat features can be adjusted using the seat controls, panel switches, and on either the front or rear center display screen.

Seat Adjustment

To adjust the seat with the control:

- Move the seat forward or rearward by sliding the control forward or rearward.

NOT FOR RESALE

- Raise or lower the front part of the seat cushion by moving the front of the control up or down.

Rear Panel Switch

To adjust the second row seats with the rear panel switch:

1. Remove any objects on the floor in front of, behind, or on the second row seat.
2. Press the switch ∨ to adjust the seat forward and incline the seatback.
3. Press the switch ∧ to adjust the seat backward and decline the seatback.

To access the third row seats with the rear panel switch:

1. Remove any objects on the floor in front of, behind, or on the second row seat.
2. Press the switch ∨ to adjust the seat forward and incline the seatback.

Executive seats do not fold flat, only incline to access/exit the third row.

Seat Recline

To recline the seatback with the control:

- Tilt the top of the control rearward to recline.
- Tilt the top of the control forward to incline.

NOT FOR RESALE

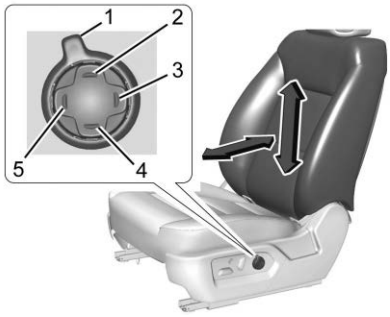

Lumbar Support

To adjust lumbar support with the control knob:

- Press Forward (5) or Rearward (3) to adjust lumbar forward or rearward.
- Press Up (2) or Down (4) to adjust lumbar up or down.
- Turn the Feature Select (1) to activate the lumbar/massage options on the rear center display screen.

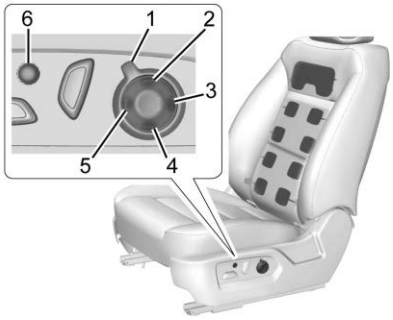

Massage

To adjust massage with the control knob:

- Turn the Feature Select (1) to activate massage on the rear center display screen.
- To turn the massage feature off or to activate at the last type setting, press the massage On/Off control (6)

Display Screens

To adjust the second row seats from the rear center display screen, touch > Position and then select the desired adjustment on the seat image.

To recline/incline the second row seats from the rear center display screen, touch > Position and then select the desired adjustment on the seat image.

The rear seats can also be adjusted from the front center display screen. See *Power Seat Adjustment* ⇨ *44*.

To enable the massage feature from the rear center display screen, touch > Massage and then select the desired massage type and intensity on the seat image.

The second row seat massage feature can also be enabled from the front center display screen. See *Massage* ⇨ *47*.

The front passenger seat can be adjusted from the rear center display screen, select > Position > Right > . See *Power Seat Adjustment* ⇨ *44*.

Memory

The memory seat feature allows passengers to save a seating and exit position for each second row seat.

To save a seating or exit position:

- Adjust the seat as desired. See “Seat Adjustment” earlier in this section.

NOT FOR RESALE

- From the seat Position tab on the rear center display screen, touch and hold the Exit or Save Position button to save the desired position.

Briefly touch the Exit or Save Position button to recall that position.

The second row seat memory positions can also be saved and recalled from the front center display screen. See *Memory Seats* ⇨ *47*.

Rear Seat Lockout

The Child Safety Locks can be enabled to lock out the second row executive seats. This will prevent motion of the second row seats. See *Safety Locks* ⇨ *18*.

⚠ Warning

The emergency pull strap is designed for emergency use only. Do not use the emergency pull strap to manually incline the seat forward. Overuse of the emergency pull strap may cause damage to the strap and people in the third row could be injured.

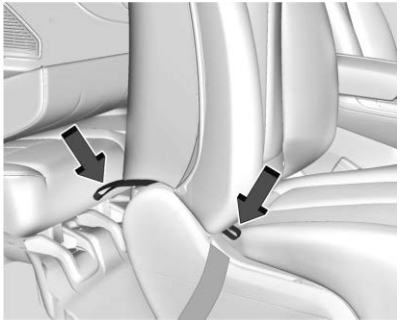

Emergency Pull Strap

Use the emergency pull strap only if the vehicle loses power and the display screens are unavailable. The emergency strap can be pulled from the second or third row seat to incline the seat forward for exit of a person in the third row.

Base Model Seat Adjustment

To adjust the seat position:

1. Remove objects on the floor in front of or on the second row seat, or in the seat tracks on the floor.
2. Lift the lever below the seat cushion and slide the seat forward or backward.

NOT FOR RESALE

Reclining Seatbacks

To recline the seatback:

1. Lift the lever on the outboard side of the seat.
2. Move the seatback to the desired position, and then release the lever to lock the seatback in place.
3. Push and pull on the seatback to make sure it is locked.

To return the seatback to the upright position:

⚠ Warning

If either seatback is not locked, it could move forward in a sudden stop or crash. That could cause injury to the person sitting there. Always push and pull on the seatbacks to be sure they are locked.

1. Lift the lever fully while applying pressure to the seatback, and the seatback will return to the upright position. If the lever is lifted without applying pressure, the seat will release to a folded position.
2. Push and pull on the seatback to make sure it is locked.

Entering and Exiting the Third Row (Base Model Only)

Manual Fold and Tumble Feature

⚠ Warning

Do not leave the second row seat in a tumbled position while the vehicle is in motion. A tumbled seat is not locked. It can move when the vehicle is in motion.

(Continued)

Warning (Continued)

People in the vehicle could be injured in a sudden stop or crash. Be sure to return the seat to the passenger seating position before driving the vehicle. Push and pull on the seat to make sure it is locked into place.

⚠ Warning

Folding a rear seat with the seat belts still fastened may cause damage to the seat or the seat belts. Always unbuckle the seat belts and return them to their normal stowed position before folding a rear seat.

The second row seats can be folded for additional cargo space or folded and tumbled for easy entry and exit to the third row seat.

Folding and Tumbling the Seat

To fold and tumble the seat:

1. Make sure that there is nothing under, in front of, or on the seat.

NOT FOR RESALE

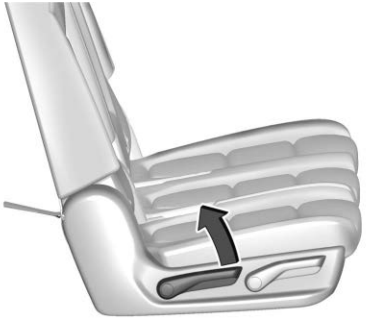

2. Lift the lever on the outboard side of the seat to release the seatback.

The seatback will fold forward to create a flat load floor.

If the seatback cannot fold flat, try moving the front seat forward and/or put the front seatback in the upright position.

3. Lift the lever again to release the rear of the seat from the floor. The seat will tumble forward.

Folding and Tumbling the Seat from the Third Row Seat

⚠ Warning

Using the third row seating position while the second row is folded, or folded and tumbled, could cause injury in a sudden stop or crash. Be sure to return the seat to the passenger seating position. Push and pull on the seat to make sure it is locked into place.

To fold and tumble the seat from the third row seat:

1. Make sure that there is nothing under, in front of, or on the seat.

NOT FOR RESALE

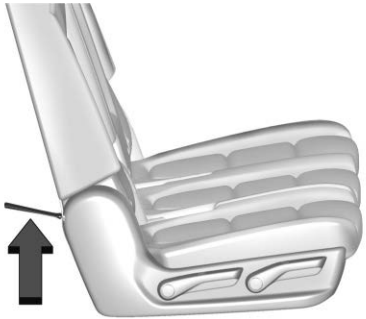

2. Pull the strap on the bottom rear of the second row seat to release the seatback. The seatback will fold forward.

3. Pull the strap again to release the rear of the seat from the floor. The seat will tumble forward.

Automatic Fold and Tumble Feature

⚠ Warning

If equipped, rear seats have electronic switches for seat functionality that operate when the vehicle is off or in park and running. Children could operate the seat switches and be injured. Never leave children alone in the vehicle.

⚠ Warning

Do not leave the second row seat in a tumbled position while the vehicle is in motion. A tumbled seat is not locked. It can move when the vehicle is in motion. People in the vehicle could be injured in a sudden stop or crash. Be sure to return the seat to the passenger seating position before driving the vehicle. Push and pull on the seat to make sure it is locked into place.

⚠ Warning

Automatically folding and tumbling the seat when someone is sitting in the seat, could cause injury to the person sitting there. Always make sure there is no one sitting in the seat before pressing the automatic seat release switch.

⚠ Warning

Folding a rear seat with the seat belts still fastened may cause damage to the seat or the seat belts. Always unbuckle the seat belts and return them to their normal stowed position before folding a rear seat.

The vehicle must be in P (Park) for this feature to work.

Folding and Tumbling the Seat

To fold and tumble the seat:

1. Make sure that there is nothing under, in front of, or on the seat.

NOT FOR RESALE

Driver Side Rear Panel Switch

2. Press the automatic seat release switch on the panel behind the rear doors. The seatback automatically folds flat.
3. Press the switch again to release the rear of the seat from the floor. The seat will tumble forward.

Folding and Tumbling the Second Row Seat from the Cargo Area (Base Model Only)

The vehicle must be in P (Park) for this feature to work.

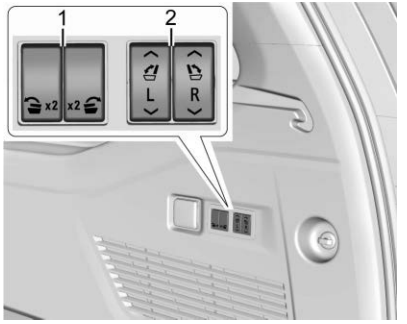

1. Second Row Power Seat Fold and Tumble Switches
2. Third Row Power Seat Fold and Raise Switches

To fold and tumble the seat from the cargo area:

1. Make sure that there is nothing under, in front of, or on the seat.
2. Press the switch (1) on the side trim of the cargo area to fold the second row seatback.

   The left switch folds the left seatback, and the right switch folds the right seatback.
3. Press the switch again to release the rear of the seat from the floor. The seat will tumble forward.

The switches (2) can be used to fold the third row seatbacks from the cargo area. See *Third Row Seats* ⇨ *59*.

Returning the Seat to the Sitting Position

⚠ Warning

If either seatback is not locked, it could move forward in a sudden stop or crash. That could cause injury to the person sitting there. Always push and pull on the seatbacks to be sure they are locked.

To return the seat to the sitting position from the tumbled position:

1. Pull the seat down until it latches to the floor. The seatback cannot be raised if the seat is not latched to the floor.
2. Lift the seatback and push it rearward. Push and pull on the seatback to make sure it is locked.
3. For the 60/40 split-bench seat, make sure the seat belt in the center seating position is not caught between the two seats and is not twisted.

NOT FOR RESALE

Heated and Ventilated Rear Seats

Warning

If temperature change or pain to the skin cannot be felt, the seat heater may cause burns. See the Warning under *Heated and Ventilated Front Seats* ⇨ *50*.

Executive Seat

You can turn on the heated or ventilated rear seats from the rear, or front, center display screen.

- From the rear center display screen, select > Temperature.
- From the front center display screen, see *Heated and Ventilated Front Seats* ⇨ *50*.

Select or to heat the seatback.

Select or to heat the seatback and cushion.

Select or to ventilate the seats.

Select the icon once for the highest setting. With each touch of the icon, the seat will change to the next lower setting, and then to the OFF setting. The indicators next to the icons indicate three for the highest setting and one for the lowest. If the heated seats are on high, the level may automatically be lowered after approximately 30 minutes.

Base Model Seat

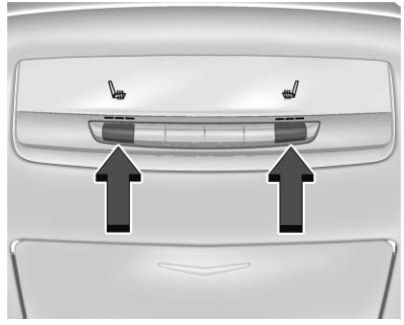

If equipped, the buttons are on the rear of the center console.

With the engine running, press or to heat the left or right outboard seat cushion. An indicator on the rear climate control display appears when this feature is on.

Press the button once for the highest setting. With each press of the button, the seat will change to the next lower setting, and then to the OFF setting. The indicator lights next to the buttons indicate three for the highest setting and one for the lowest.

If the heated seats are on high for 30 minutes, their level may automatically be lowered.

Auto and Remote Start Heated and Ventilated Seats

The heated and ventilated rear seats can be automatically enabled. See *Heated and Ventilated Front Seats* ⇨ *50*.

Third Row Seats

Warning

Folding a rear seat with the seat belts still fastened may cause damage to the seat or the seat belts. Always unbuckle the seat belts and return them to their normal stowed position before folding a rear seat.

The third row seatbacks can be folded to increase cargo space.

1. Open the liftgate to access the controls for the third row seat.

NOT FOR RESALE

2. Make sure that there is nothing under, in front of, or on the seat.
3. If the second row seat is in the full rear position, adjust it forward to allow the third row seat to fold fully flat.

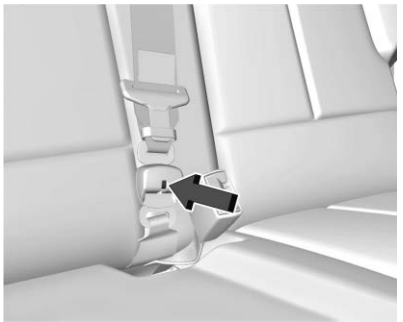

4. Disconnect the rear seat belt mini-latch, using a key in the slot on the mini-buckle, and let the belt retract into the headliner.

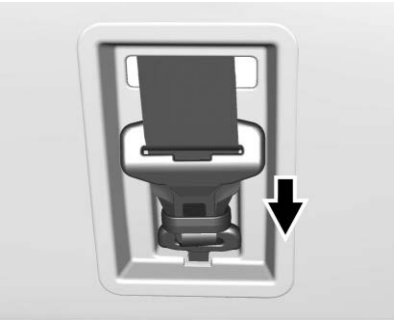

5. Stow the mini-latch in the holder in the headliner.

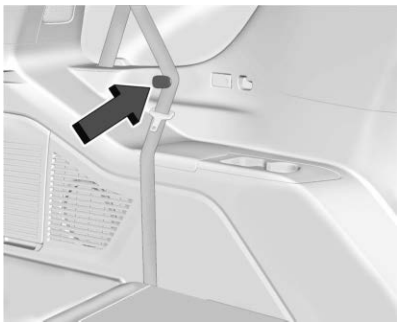

6. Stow the seat belt in the belt stowage clip.

Repeat the steps to fold the other seatback, if desired.

Power Seatback Folding

⚠ Warning

If equipped, rear seats have electronic switches for seat functionality that operate when the vehicle is off or in park and running. Children could operate the seat switches and be injured. Never leave children alone in the vehicle.

The vehicle must be in P (Park) for this feature to work.

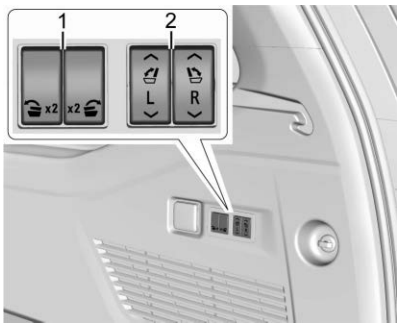

NOT FOR RESALE

1. Second Row Power Seat Fold and Tumble Switches (If Equipped)
2. Third Row Power Seat Fold and Raise Switches (If Equipped)

1. Press and hold the switch (2) on the side trim of the cargo area to fold the third row seatback.

   The left switch folds the left seatback, and the right switch folds the right seatback.
2. Repeat the steps for the other seatback, if desired.

The switches (1) can be used to fold or fold and tumble the second row seats from the cargo area. See *Second Row Seats* ➪ *51*.

Returning the Third Row Seatback to the Upright Position

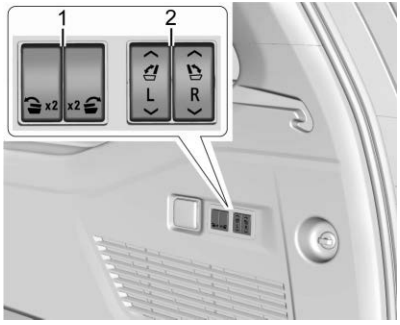

1. Second Row Power Seat Fold and Tumble Switches (If Equipped)
2. Third Row Power Seat Fold and Raise Switches (If Equipped)

To return the third row seatback to the upright position:

1. Ensure the seat belt is in the belt stowage clip.
2. Open the liftgate to access the controls for the seat.
3. Press and hold the switch (2) on the side trim of the cargo area to raise the third row seatback.

   The left switch raises the left seatback, and the right switch raises the right seatback.

NOT FOR RESALE

Warning

A seat belt that is improperly routed, not properly attached, or twisted will not provide the protection needed in a crash. The person wearing the belt could be seriously injured. After raising the rear seatback, always check to be sure that the seat belts are properly routed and attached, and are not twisted.

4. Reconnect the center seat belt mini-latch to the mini-buckle. Do not let it twist.
5. Pull on the seat belt to be sure the mini-latch is secure.
6. Repeat the steps for the other seatback, if desired.

Folding the Third Row Seats from the Overhead Console

To fold the seats from the overhead console, if equipped:

The vehicle must be in P (Park) for this feature to work.

1. Press and hold the switch to fold the third row seatback.

   The left switch folds the left seatback, and the right switch folds the right seatback.
2. Repeat the steps for the other seatback, if desired.
3. Press and hold the switch to return the seatback to the seating position.

   If equipped, the red light on the switch will illuminate if the third row seatback is not in the seating position.

There are additional switches which can be used to fold the third row seatbacks from the cargo area. See “Power Seatback Folding” earlier in this section.

Seat Belts

This section describes how to use seat belts properly, and some things not to do.

Warning

Do not let anyone ride where a seat belt cannot be worn properly. In a crash, if you or your passenger(s) are not wearing seat belts, injuries can be much worse than if you are wearing seat belts. You can be seriously injured or killed by hitting things inside the vehicle harder or by being ejected from the vehicle. In addition, anyone who is not buckled up can strike other passengers in the vehicle.

It is extremely dangerous to ride in a cargo area, inside or outside of a vehicle. In a collision, passengers riding in these areas are more likely to be seriously injured or

(Continued)

NOT FOR RESALE

Warning (Continued)

killed. Do not allow passengers to ride in any area of the vehicle that is not equipped with seats and seat belts.

Always wear a seat belt, and check that all passenger(s) are restrained properly too.

This vehicle has indicators as a reminder to buckle the seat belts. See *Seat Belt Reminders* ⇨ *119*.

Why Seat Belts Work

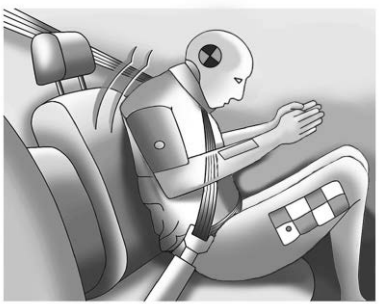

When riding in a vehicle, you travel as fast as the vehicle does. If the vehicle stops suddenly, you keep going until something stops you. It could be the windshield, the instrument panel, or the seat belts!

When you wear a seat belt, you and the vehicle slow down together. There is more time to stop because you stop over a longer distance, and when worn properly, your strongest bones take the forces from the seat belts. That is why wearing seat belts makes such good sense.

Questions and Answers About Seat Belts

Q: Will I be trapped in the vehicle after a crash if I am wearing a seat belt?

A: You *could* be — whether you are wearing a seat belt or not. Your chance of being conscious during and after a crash, so you *can* unbuckle and get out, is *much* greater if you are belted.

Q: If my vehicle has airbags, why should I have to wear seat belts?

A: Airbags are supplemental systems only. They work *with* seat belts — not instead of them. Whether or not an airbag is provided, all occupants still have to buckle up to get the most protection.

Also, in nearly all states and in all Canadian provinces, the law requires wearing seat belts.

Buckle To Drive

If equipped, this feature delays the vehicle from shifting out of P (Park) when the driver seat belt is not buckled. The Buckle to Drive feature must be turned ON in the infotainment system to work. To turn the Buckle to Drive feature on or off, select Settings > Vehicle > Buckle to Drive. See *Teen Driver* ⇨ *177*, if equipped.

If the vehicle is on and the brake pedal is pressed with the vehicle in P (Park) but the driver seat belt is not buckled, a message displays in the Driver Information Center and the vehicle will be delayed from shifting out of P (Park). Buckle the driver seat belt to clear the message and

NOT FOR RESALE

shift out of P (Park). Shifting from P (Park) will be delayed once for each time the vehicle is started.

For some fleet vehicles, the feature is always ON and cannot be turned OFF in the infotainment system. The vehicle will be delayed from shifting from P (Park) each time the driver attempts to do so while the driver seat belt is not buckled. Turning the vehicle off then on will not change this condition.

On some models, Buckle to Drive may also delay shifting out of P (Park) if a front passenger seat belt is unbuckled. A message displays in the Driver Information Center. Buckle the front passenger seat belt to shift out of P (Park). This feature may delay the vehicle from shifting out of P (Park) if an object, such as a briefcase, handbag, grocery bag, laptop, or other electronic device, is on the front passenger seat. If this happens, remove the object from the seat or buckle the seat belt to shift out of P (Park).

If the driver, or on some vehicles, the present front passenger remains unbuckled, the Driver Information Center message will turn off after several seconds and the vehicle can be shifted out of P (Park). See “Seat Belts” and “Child Restraints” in the Index for information about the importance of proper restraint use.

If the driver seat belt or the front passenger seat belt is unbuckled when driving, the seat belt reminder audible alert and light(s) will come on. See *Seat Belt Reminders* ⇨ *119*. This feature may not function properly if the airbag readiness light is on. See *Airbag Readiness Light* ⇨ *120*.

How to Wear Seat Belts Properly

Follow these rules for everyone's protection.

There are additional things to know about seat belts and children, including smaller children and infants. If a child will be riding in the vehicle, see *Older Children* ⇨ *81* or *Infants and Young Children* ⇨ *83*. Review and follow the rules for children in addition to the following rules.

It is very important for all occupants to buckle up. Statistics show that unbelted people are hurt more often in crashes than those who are wearing seat belts.

There are important things to know about wearing a seat belt properly.

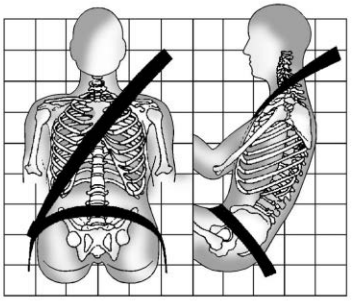

- Sit up straight and always keep your feet on the floor in front of you (if possible).
- Wear the lap part of the belt low and snug on the hips, just touching the thighs. In a crash, this applies force to the strong pelvic bones and you would be less likely to slide under the lap belt. If you slid under it, the belt would apply force on your abdomen. This could cause serious or even fatal injuries.
- Wear the shoulder belt over the shoulder and across the chest. These parts of the body are best able to take belt restraining forces. The shoulder belt locks if there is a sudden stop or crash.

NOT FOR RESALE

⚠ Warning

You can be seriously injured, or even killed, by not wearing your seat belt properly.

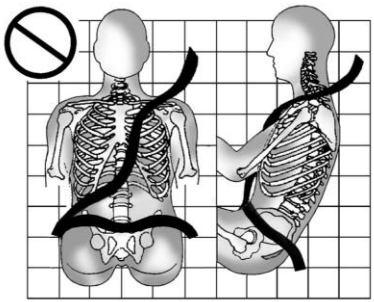

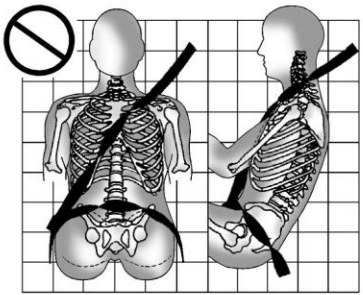

Never allow the lap or shoulder belt to become loose or twisted.

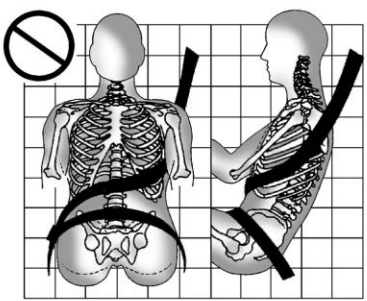

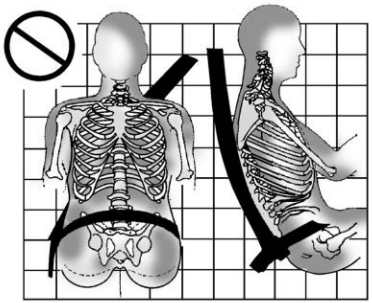

Never wear the shoulder belt under both arms or behind your back.

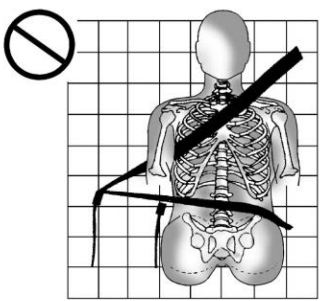

Always use the correct buckle for your seating position.

NOT FOR RESALE

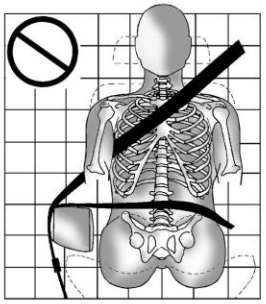

Never route the lap or shoulder belt over an armrest.

⚠ Warning

The seat belt can be pinched if it is routed under plastic trim on the seat, such as trim around the rear seatback folding handle or side airbag. In a crash, pinched seat belts might not provide adequate protection. Never allow seat belts to be routed under plastic trim pieces.

⚠ Warning

You can be seriously injured or killed if the shoulder belt is worn behind your back, under your legs, or wrapped around your neck. The shoulder belt can tighten but cannot be loosened if it is locked. The shoulder belt locks when it is pulled all the way out of the retractor. It unlocks when the shoulder belt is allowed to go all the way back into the retractor, but it cannot do this if it is wrapped around you. You may have to cut the seat belt if it is locked and tightened around you.

Lap-Shoulder Belt

All seating positions in the vehicle have a lap-shoulder belt.

If you are using a rear seating position with a detachable seat belt and the seat belt is not attached, see *Third Row Seats* ⇨ *59* for instructions on reconnecting the seat belt to the mini-buckle.

The following instructions explain how to wear a lap-shoulder belt properly.

⚠ Warning

If equipped, the second row passenger can create more legroom by moving the front passenger seat with controls located on the rear center display screen. To prevent serious injury or death in a crash, do not permit a rear seat passenger to move the front seat if someone is seated there. Disable the controls by activating Rear Control Lock from the front center display screen.

1. Adjust the seat, if the seat is adjustable, so you can sit up straight. To see how, see “Seats” in the Index.

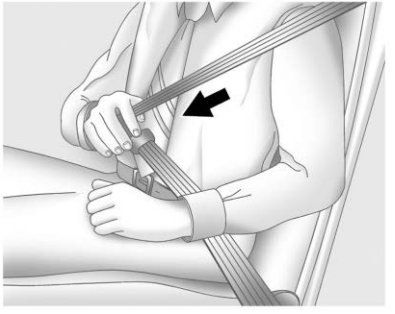

NOT FOR RESALE

2. Pick up the latch plate and pull the belt across you. Do not let it get twisted.

   The lap-shoulder belt may lock if you pull the belt across you very quickly. If this happens, let the belt go back slightly to unlock it. Then pull the belt across you more slowly.

   If the shoulder portion of a passenger belt is pulled out all the way, the child restraint locking feature may be engaged. See *Child Restraint Systems* ⇨ *85*. If this occurs, let the belt go back all the way and start again. If the locking feature stays engaged after letting the belt go back to stowed position on the seat, move the seat rearward or recline the seat until the shoulder belt retractor lock releases.

   Engaging the child restraint locking feature in the front outboard seating position may affect the passenger sensing system. See *Passenger Sensing System* ⇨ *76*.

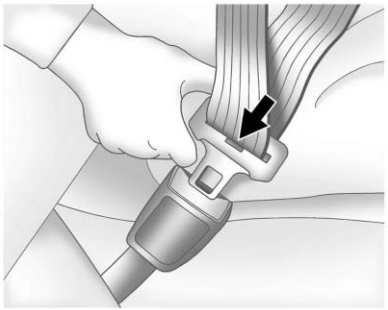

3. Push the latch plate into the buckle until it clicks.

   If the latch plate will not go fully into the buckle, check if the correct buckle is being used.

   Pull up on the latch plate to make sure it is secure.

   If the belt is not long enough, see *Seat Belt Extender* ⇨ *69*.

   Position the release pushbutton on the buckle so that the seat belt could be quickly unbuckled if necessary.

4. If equipped with a shoulder belt height adjuster, move it to the height that is right for you. See "Shoulder Belt Height Adjuster" in this section for instructions on use and important safety information.

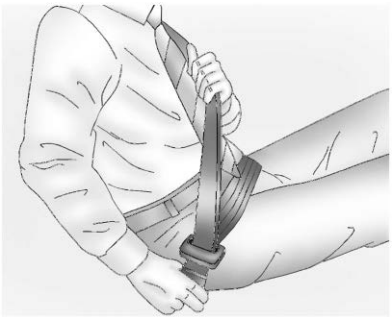

5. To make the lap part tight, pull up on the shoulder belt.

NOT FOR RESALE

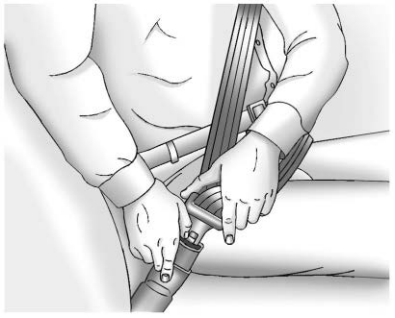

To unlatch the belt, push the release pushbutton on the buckle. The belt should return to its stowed position.

Always stow the seat belt slowly. If the seat belt webbing returns quickly to the stowed position, the retractor may lock and cannot be pulled out. If this happens, pull the seat belt straight out firmly to unlock the webbing, and then release it. If the webbing is still locked in the retractor, see your dealer.

Before a door is closed, be sure the seat belt is out of the way. If a door is slammed against a seat belt, damage can occur to both the seat belt and the vehicle.

Shoulder Belt Height Adjuster

The vehicle has a shoulder belt height adjuster for the driver and front outboard passenger positions.

Adjust the height so the shoulder portion of the belt is on the shoulder and not falling off of it. The belt should be close to, but not contacting, the neck. Improper shoulder belt height adjustment could reduce the effectiveness of the seat belt in a crash. See *How to Wear Seat Belts Properly* ⇨ *64*.

Push the release button to move the height adjuster to the desired position.

After the adjuster is set to the desired position, try to move it down without pushing the release button to make sure it has locked into position.

Seat Belt Pretensioners

This vehicle has seat belt pretensioners for the front outboard occupants.

Although the seat belt pretensioners cannot be seen, they are part of the seat belt assembly. They can help tighten the seat belts during the early stages of a moderate to severe frontal or near frontal crash if the threshold conditions for pretensioner activation are met.

Seat belt pretensioners can also help tighten the seat belts in a side crash or rollover event.

Pretensioners work only once. If the pretensioners activate in a crash, the pretensioners and probably other parts of the vehicle seat belt system will need to be replaced. See *Replacing Seat Belt System Parts After a Crash* ⇨ *70*.

Do not sit on the outboard seat belt while entering or exiting the vehicle or at any time while sitting in the seat. Sitting on the seat belt can damage the webbing and hardware.

NOT FOR RESALE

Rear Seat Belt Comfort Guides

Rear seat belt comfort guides may provide added seat belt comfort for older children who have outgrown booster seats and for some adults. When installed on a shoulder belt, the comfort guide positions the shoulder belt away from the neck and head.

Comfort guides are available through your dealer for the rear outboard seating positions. Instructions are included with the comfort guides.

Seat Belt Use During Pregnancy

Seat belts work for everyone, including pregnant women. Like all occupants, they are more likely to be seriously injured if they do not wear seat belts.

A pregnant woman should wear a lap-shoulder belt, and the lap portion should be worn as low as possible, below the rounding, throughout the pregnancy.

The best way to protect the fetus is to protect the mother. When a seat belt is worn properly, it is more likely that the fetus will not be hurt in a crash. For pregnant women, as for anyone, the key to making seat belts effective is wearing them properly.

Seat Belt Extender

⚠ Warning

Using a seat belt extender incorrectly can affect certain vehicle safety alerts and systems, potentially leading to unexpected vehicle movement. Always unfasten the seat belt by pushing on the vehicle-mounted buckle release button. Only use the extender-mounted release button to remove the extender after you are done using it. Follow all instructions that come with the seat belt extender.

If the vehicle seat belt will fasten around you, you should use it.

But if a seat belt is not long enough, your dealer will order you an extender. Only a genuine GM issued extender should be used. When you go in to order it, take the heaviest coat you will wear, so the extender will be long enough for you. To help avoid personal injury, do not let someone else use it, and use it only for the seat it is made to fit. The extender has been designed for adults. Never use it for securing

NOT FOR RESALE

child restraints. For more information on the proper use and fit of seat belt extenders, see the instruction sheet that comes with the extender.

Safety System Check

Periodically check the seat belt reminder, seat belts, buckles, latch plates, retractors, shoulder belt height adjusters (if equipped), and seat belt anchorages to make sure they are all in working order. Look for any other loose or damaged seat belt system parts that might keep a seat belt system from performing properly. See your dealer to have it repaired. Torn, frayed, or twisted seat belts may not protect you in a crash. Torn or frayed seat belts can rip apart under impact forces. If a belt is torn or frayed, have it replaced immediately. If a belt is twisted, it may be possible to untwist by reversing the latch plate on the webbing. If the twist cannot be corrected, ask your dealer to fix it.

Make sure the seat belt reminder light is working. See *Seat Belt Reminders* ⇨ *119*.

Keep seat belts clean and dry. See *Seat Belt Care* ⇨ *70*.

Seat Belt Care

Keep belts clean and dry.

⚠ Warning

Do not bleach or dye seat belt webbing. It may severely weaken the webbing. In a crash, they might not be able to provide adequate protection. Clean and rinse seat belt webbing only with mild soap and lukewarm water. Allow the webbing to dry.

Seat belts should be properly cared for and maintained.

Seat belt hardware should be kept dry and free of dust or debris. As necessary exterior hard surfaces and seat belt webbing may be lightly cleaned with mild soap and water. Ensure there is not excessive dust or debris in the mechanism. If dust or debris exists in the system after proper cleaning please see the dealer. Parts may need to be replaced to ensure proper functionality of the system.

Replacing Seat Belt System Parts After a Crash

⚠ Warning

A crash can damage the seat belt system in the vehicle. A damaged seat belt system may not properly protect the person using it, resulting in serious injury or even death in a crash. To help make sure the seat belt systems are working properly after a crash, have them inspected and any necessary replacements made as soon as possible.

After a minor crash, replacement of seat belts may not be necessary. But the seat belt assemblies that were used during any crash may have been stressed or damaged. See your dealer to have the seat belt assemblies inspected or replaced.

New parts and repairs may be necessary even if the seat belt system was not being used at the time of the crash.

NOT FOR RESALE

Have the seat belt pretensioners checked if the vehicle has been in a crash, or if the airbag readiness light stays on after you start the vehicle or while you are driving. See *Airbag Readiness Light* ⇨ *120*.

Airbag System

Here are the most important things to know about the airbag system:

⚠ Warning

You can be severely injured or killed in a crash if you are not wearing your seat belt, even with airbags. Airbags are designed to work with seat belts, not replace them. Also, airbags are not designed to inflate in every crash. In some crashes seat belts are the only restraint. See *When Should an Airbag Inflate?* ⇨ *73*.

Wearing your seat belt during a crash helps reduce your chance of hitting things inside the vehicle or being ejected from it. Airbags are "supplemental restraints" to the seat belts. Everyone in the vehicle should wear a seat belt properly, whether or not there is an airbag for that person.

⚠ Warning

Because airbags inflate with great force and faster than the blink of an eye, anyone who is up against, or very close to any airbag when it inflates can be seriously injured or killed. Do not sit unnecessarily close to any airbag, as you would be if sitting on the edge of the seat or leaning forward. Seat belts help keep you in position before and during a crash. Always wear a seat belt, even with airbags. The driver should sit as far back as possible while still maintaining control of the vehicle. The seat belts and the front outboard passenger airbags are most effective when you are sitting well back and upright in the seat with both feet on the floor.

Occupants should not lean on or sleep against the front center armrest or console in vehicles with a front center airbag.

Occupants should not lean on or sleep against the door or side windows in seating positions with seat-mounted side impact airbags and/or roof-rail airbags.

⚠ Warning

Children who are up against, or very close to, any airbag when it inflates can be seriously injured or killed. Always secure children properly in the vehicle. To read how, see *Older Children* ⇨ *81* or *Infants and Young Children* ⇨ *83*.

The vehicle has the following airbags:

- A frontal airbag for the driver
- A frontal airbag for the front outboard passenger
- A front center airbag for the driver and front outboard passenger
- A seat-mounted side impact airbag for the driver
- A seat-mounted side impact airbag for the front outboard passenger
- A roof-rail airbag for the driver and for the second and third row passengers seated directly behind the driver

NOT FOR RESALE

- A roof-rail airbag for the front outboard passenger and the second and third row passengers seated directly behind the front outboard passenger

All vehicle airbags have the word AIRBAG on the trim or on a label near the deployment opening.

For frontal airbags, the word AIRBAG is on the center of the steering wheel for the driver and on the instrument panel for the front outboard passenger.

For the front center airbag, the word AIRBAG is on the inboard side of the driver seatback.

For seat-mounted side impact airbags, the word AIRBAG is on the side of the seatback or side of the seat closest to the door.

For roof-rail airbags, the word AIRBAG is on the ceiling or trim.

Airbags are designed to supplement the protection provided by seat belts. Even though today's airbags are also designed to help reduce the risk of injury from the force of an inflating bag, all airbags must inflate very quickly to do their job.

There is an airbag readiness light on the center stack below the infotainment screen, which shows the airbag symbol.

The system checks the airbag electrical system for malfunctions. The light tells you if there is an electrical problem. See *Airbag Readiness Light* ⇨ *120*.

Where Are the Airbags?

⚠ Warning

If something is between an occupant and an airbag, the airbag might not inflate properly or it might force the object into that person causing severe injury or even death. The path of an inflating airbag must be kept clear. Do not put anything between an occupant and an airbag, and

(Continued)

Warning (Continued)

do not attach or put anything on the steering wheel hub or on or near any other airbag covering.

Do not use seat or console accessories that block the inflation path of a seat-mounted side impact airbag or the front center airbag.

Never secure anything to the roof of a vehicle with roof-rail airbags by routing a rope or tie-down through any door or window opening. If you do, the path of an inflating roof-rail airbag will be blocked.

NOT FOR RESALE

The driver frontal airbag is in the center of the steering wheel.

The front outboard passenger frontal airbag is in the passenger side instrument panel.

The front center airbag is in the inboard side of the driver seatback.

Driver Side Shown, Passenger Side Similar

The driver and front outboard passenger seat-mounted side impact airbags are in the side of the seatbacks closest to the door.

Driver Side Shown, Passenger Side Similar

The roof-rail airbags for the driver, front outboard passenger, and second and third row outboard passengers are in the ceiling above the side windows.

When Should an Airbag Inflate?

This vehicle is equipped with airbags. See *Airbag System* ➪ *71*. Airbags are designed to inflate if the impact exceeds the specific airbag system's deployment threshold. Deployment thresholds are used to predict how severe a crash is likely to be in time for the airbags to inflate and help restrain the occupants. The vehicle has electronic sensors that help the

NOT FOR RESALE

airbag system determine the severity of the impact. Deployment thresholds can vary with specific vehicle design.

Frontal airbags are designed to inflate in moderate to severe frontal crashes to help reduce the potential for severe injuries, mainly to the driver's or front outboard passenger's head and chest.

Whether the frontal airbags will or should inflate is not based primarily on how fast the vehicle is traveling. It depends on what is hit, the direction of the impact, and how quickly the vehicle slows down.

Frontal airbags may inflate at different crash speeds depending on whether the vehicle hits an object straight on or at an angle, and whether the object is fixed or moving, rigid or deformable, narrow or wide.

Frontal airbags are not intended to inflate during vehicle rollovers, rear impacts, or many side impacts.

In addition, the vehicle has advanced technology frontal airbags. Advanced technology frontal airbags adjust the restraint according to either crash severity or occupant interaction.

The front center airbag is designed to inflate in moderate to severe side crashes depending upon the location of the impact, when either side of the vehicle is struck. In addition, the front center airbag is designed to inflate when the sensing system predicts that the vehicle is about to roll over on its side. The front center airbag is not designed to inflate in frontal impacts, near frontal impacts, or rear impacts.

Seat-mounted side impact airbags are designed to inflate in moderate to severe side crashes depending on the location of the impact. These airbags may also inflate in some moderate to severe frontal impacts. Seat-mounted side impact airbags are not designed to inflate in rollovers or rear impacts. A seat-mounted side impact airbag is designed to inflate on the side of the vehicle that is struck.

Roof-rail airbags are designed to inflate in moderate to severe side crashes depending on the location of the impact. In addition, these roof-rail airbags may inflate during a rollover or in a severe frontal impact. Roof-rail airbags are not designed to inflate in rear impacts. Both roof-rail airbags may inflate when either side of the vehicle is struck or if the sensing system predicts that the vehicle is about to roll over on its side, or in a severe frontal impact.

In any particular crash, no one can say whether an airbag should have inflated simply because of the vehicle damage or the repair costs.

What Makes an Airbag Inflate?

In a deployment event, the sensing system sends an electrical signal triggering a release of gas from the inflator. Gas from the inflator fills the airbag causing the bag to break out of the cover. The inflator, the airbag, and related hardware are all part of the airbag module.

For airbag locations, see *Where Are the Airbags?* ➪ 72.

How Does an Airbag Restrain?

In moderate to severe frontal collisions, even belted occupants can contact the steering wheel or the instrument panel. In moderate to severe side collisions, even belted occupants can contact the inside of the vehicle.

Airbags supplement the protection provided by seat belts by distributing the force of the impact more evenly over the occupant's body.

Rollover capable roof-rail airbags are designed to help contain the head and chest of occupants in the outboard seating positions in the first, second, and third rows. The rollover capable

NOT FOR RESALE

roof-rail airbags are designed to help reduce the risk of full or partial ejection in rollover events, although no system can prevent all such ejections.

But airbags would not help in many types of collisions, primarily because the occupant's motion is not toward those airbags. See *When Should an Airbag Inflate?* ⇨ *73*.

Airbags should never be regarded as anything more than a supplement to seat belts.

What Will You See After an Airbag Inflates?

⚠ Warning

When an airbag inflates, there may be dust in the air. This dust could cause breathing problems for people with a history of asthma or other breathing trouble. To avoid this, everyone in the vehicle should get out as soon as it is safe to do so. If you have breathing problems but cannot get out of the vehicle after an airbag inflates, then get fresh air by opening a window

(Continued)

Warning (Continued)

or a door. If you experience breathing problems following an airbag deployment, you should seek medical attention.

After frontal and seat-mounted side impact airbags inflate, they quickly deflate, so quickly that some people may not even realize the airbags inflated. The front center airbag and roof-rail airbags may still be at least partially inflated for some time after they inflate. Some components of the airbag module may be hot for several minutes. For location of the airbags, see *Where Are the Airbags?* ⇨ *72*.

The parts of the airbag that come into contact with you may be warm, but not too hot to touch. There may be some smoke and dust coming from the vents in the deflated airbags. Airbag inflation does not prevent people from leaving the vehicle.

⚠ Warning

A crash severe enough to inflate the airbags may have also damaged important functions in the vehicle, such as the fuel system, brake and steering systems, etc. Even if the vehicle appears to be drivable after a moderate crash, there may be concealed damage that could make it difficult to safely operate the vehicle.

Use caution if you should attempt to restart the engine after a crash has occurred.

The vehicle has a feature that may automatically unlock the doors, turn on the interior lights and hazard warning flashers, and shut off the fuel system after the airbags inflate.

This vehicle has a post-collision braking feature that may automatically engage to help slow your vehicle down after a crash. See *Post-Collision Braking (Secondary Collision Mitigation Braking)* ⇨ *222* for more information.

The feature may also activate, without airbag inflation, after an event that exceeds a predetermined threshold. After turning the

NOT FOR RESALE

vehicle off and then on again, the fuel system will return to normal operation; the doors can be locked, the interior lights can be turned off, and the hazard warning flashers can be turned off using the controls for those features. If any of these systems are damaged in the crash they may not operate as normal.

In many crashes severe enough to inflate the airbag, windshields are broken by vehicle deformation. Additional windshield breakage may also occur from the front outboard passenger airbag.

- Airbags are designed to inflate only once. After an airbag inflates, you will need some new parts for the airbag system. If you do not get them, the airbag system will not be there to help protect you in another crash. A new system will include airbag modules and possibly other parts. The service manual for the vehicle covers the need to replace other parts.
- The vehicle has a crash sensing and diagnostic module which records information after a crash. See *Vehicle Data Recording and Privacy* ⇨ *417* and *Event Data Recorders* ⇨ *418*.
- Let only qualified technicians work on the airbag system. Improper service can mean that an airbag system will not work properly. See your dealer for service.

Passenger Sensing System

⚠ Warning

A child in a rear-facing child restraint can be seriously injured or killed if the passenger frontal airbag inflates. This is because the back of the rear-facing child restraint would be very close to the inflating airbag. A child in a forward-facing child restraint can be seriously injured or killed if the passenger frontal airbag inflates and the passenger seat is in a forward position.

Even if the passenger sensing system has turned off the passenger frontal airbag, no system is fail-safe. No one can guarantee that an airbag will not deploy under some unusual circumstance, even though the airbag is turned off.

(Continued)

Warning (Continued)

Never put a rear-facing child restraint in the front seat, even if the airbag is off. If securing a forward-facing child restraint in the front outboard passenger seat, always move the seat as far back as it will go. It is better to secure child restraints in the rear seat. Consider using another vehicle to transport the child when a rear seat is not available.

The vehicle has a passenger sensing system for the front outboard passenger position. The passenger airbag status indicator will light on the overhead console when the vehicle is started.

The passenger airbag status indicator may include text and/or symbols to indicate the passenger frontal airbag is either On or Off.

NOT FOR RESALE

The passenger airbag status indicator indicating both On and Off will be visible during the system check.

When the system check is complete, the passenger airbag status indicator for either On or Off will be visible.

See *Passenger Airbag Status Indicator* ⇨ *121*.

The passenger sensing system turns off the front outboard passenger frontal airbag under certain conditions. No other airbag is affected by the passenger sensing system.

The passenger sensing system works with sensors that are part of the front outboard passenger seat and seat belt. The sensors are designed to detect the presence of a properly seated occupant and determine if the front outboard passenger frontal airbag should be allowed to inflate or not.

According to accident statistics, children are safer when properly secured in a rear seat in the correct child restraint for their weight and size.

Whenever possible, children aged 12 and under should be secured in a rear seating position.

Never put a rear-facing child seat in the front. This is because the risk to the rear-facing child is so great, if the airbag inflates.

The passenger sensing system is designed to turn off the front outboard passenger frontal airbag if:

- The front outboard passenger seat is unoccupied.
- The system determines an infant is present in a child restraint.
- A front outboard passenger takes his/her weight off of the seat for a period of time.
- There is a critical problem with the airbag system or the passenger sensing system.

When the passenger sensing system has turned off the front outboard passenger frontal airbag, the passenger airbag status indicator for Off will light and stay lit as a reminder that the airbag is off. See *Passenger Airbag Status Indicator* ⇨ *121*.

The passenger sensing system is designed to turn on the front outboard passenger frontal airbag anytime the system senses that a person of adult size is sitting properly in the front outboard passenger seat. When the passenger sensing system has allowed the airbag to be enabled, the passenger airbag status indicator for On will light and stay lit as a reminder that the airbag is active.

For some children, including children in child restraints, and for very small adults, the passenger sensing system may or may not turn off the front outboard passenger frontal airbag, depending upon the person's seating posture and body build. Everyone in the vehicle who has outgrown child restraints should wear a seat belt properly — whether or not there is an airbag for that person.

⚠ Warning

If the airbag readiness light ever comes on and stays on, it means that something may be wrong with the airbag system. To help avoid injury to yourself or others, have the vehicle serviced right away. See *Airbag Readiness Light* ⇨ *120* for more information, including important safety information.

If the On Indicator Is Lit for a Child Restraint

The passenger sensing system is designed to turn off the front outboard passenger frontal airbag, if the system determines that an infant is present in a child restraint. If a child restraint has been installed and the passenger airbag status indicator for On is lit:

1. Turn the vehicle off.

NOT FOR RESALE

2. Remove the child restraint from the vehicle.
3. Remove any additional items from the seat such as blankets, cushions, seat covers, seat heaters, or seat massagers.
4. Reinstall the child restraint following the directions provided by the child restraint manufacturer and refer to *Securing Child Restraints (With the Seat Belt in the Front Passenger Seat)* ⇨ *98 Securing Child Restraints (With the Seat Belt in the Rear Seat)* ⇨ *96*.

   Make sure the seat belt retractor is locked by pulling the shoulder belt all the way out of the retractor when installing the child restraint, even if the child restraint is equipped with a seat belt lock off. When the retractor lock is set, the belt can be tightened but not pulled out of the retractor.
5. If, after reinstalling the child restraint and restarting the vehicle, the passenger airbag status indicator for On is still lit, turn the vehicle off. Then slightly recline the vehicle seatback and adjust the seat cushion, if adjustable, to make sure that the vehicle seatback is not pushing the child restraint into the seat cushion. Also make sure the child restraint is not trapped under the vehicle head restraint. If this happens, adjust the head restraint. See *Head Restraints* ⇨ *42*.
6. Restart the vehicle.

   The passenger sensing system may or may not turn off the airbag for a child in a child restraint depending upon the child's size. It is better to secure the child restraint in a rear seat. Never put a rear-facing child restraint in the front seat, even if the passenger airbag status indicator for On is not lit.

If the Off Indicator Is Lit for an Adult-Sized Occupant

⚠ Warning

If the front outboard passenger airbag is turned off for an adult-sized occupant, the airbag will not be able to inflate and help protect that person in a crash, resulting in an increased risk of serious injury or even death. An adult-sized occupant should not ride in the front outboard passenger seat, if the passenger airbag OFF indicator is lit.

If a person of adult size is sitting in the front outboard passenger seat, but the passenger airbag status indicator for Off is lit, it could be because that person is not sitting properly in the seat or that the child restraint locking feature is engaged. Use the following steps to allow the system to detect that person and enable the front outboard passenger frontal airbag:

1. Turn the vehicle off.
2. Remove any additional material from the seat, such as blankets, cushions, seat covers, seat heaters, or seat massagers.
3. Place the seatback in the fully upright position.

NOT FOR RESALE

4. Have the person sit upright in the seat, centered on the seat cushion, with legs comfortably extended.
5. If the shoulder portion of the belt is pulled out all the way, the child restraint locking feature will be engaged. This may unintentionally cause the passenger sensing system to turn the airbag off for some adult-sized occupants. If this happens, unbuckle the belt, let the belt go back all the way, and then buckle the belt again without pulling the belt out all the way.
6. Restart the vehicle and have the person remain in this position for two to three minutes after the passenger airbag status indicator for On is lit.

Additional Factors Affecting System Operation

⚠ Warning

Stowing articles under the passenger seat or between the passenger seat cushion and seatback may interfere with the proper operation of the passenger sensing system.

Seat belts help keep the passenger in position on the seat during vehicle maneuvers and braking, which helps the passenger sensing system maintain the passenger airbag status. See “Seat Belts” and “Child Restraints” in the Index for additional information about the importance of proper restraint use.

A thick layer of additional material, such as a blanket or cushion, or aftermarket equipment such as seat covers, seat heaters, and seat massagers can affect how well the passenger sensing system operates. We recommend that you not use seat covers or other aftermarket equipment except when approved by GM for your specific vehicle. See *Adding Equipment to the Airbag-Equipped Vehicle* ➪ *80* for more information about modifications that can affect how the system operates.

The passenger airbag status indicator for On may be lit if an object, such as a briefcase, handbag, grocery bag, laptop, or other electronic device, is put on an unoccupied seat. If this is not desired remove the object from the seat.

Servicing the Airbag-Equipped Vehicle

⚠ Warning

For up to 10 seconds after the vehicle is turned off and the battery is disconnected, an airbag can still inflate during improper service. You can be injured if you are close to an airbag when it inflates. Avoid yellow connectors. They are probably part of the airbag system. Be sure to follow proper service procedures, and make sure the person performing work for you is qualified to do so.

Airbags affect how the vehicle should be serviced. There are parts of the airbag system in several places around the vehicle. Your dealer and the service manual have information about servicing the vehicle and the airbag system. To purchase a service manual, see *Publication Ordering Information* ➪ *415*.

NOT FOR RESALE

Adding Equipment to the Airbag-Equipped Vehicle

Adding accessories that change the vehicle's frame, bumper system, height, front end, or side sheet metal may keep the airbag system from working properly.

The operation of the airbag system can also be affected by changing, including improperly repairing or replacing, any parts of the following:

- Airbag system, including airbag modules, front or side impact sensors, sensing and diagnostic module, airbag wiring, or front center console
- Front seats, including stitching, seams or zippers
- Seat belts
- Steering wheel, instrument panel, overhead console, ceiling trim, or pillar garnish trim
- Inner door seals, including speakers

Your dealer and the service manual have information about the location of the airbag modules and sensors, sensing and diagnostic module, and airbag wiring along with the proper replacement procedures.

In addition, the vehicle has a passenger sensing system for the front outboard passenger position, which includes sensors that are part of the passenger seat. The passenger sensing system may not operate properly if the original seat trim is replaced with non-GM covers, upholstery, or trim, or with GM covers, upholstery, or trim designed for a different vehicle. Any object, such as an aftermarket seat heater or a comfort enhancing pad or device, installed under or on top of the seat fabric, could also interfere with the operation of the passenger sensing system. This could either prevent proper deployment of the passenger airbag(s) or prevent the passenger sensing system from properly turning off the passenger airbag(s). See *Passenger Sensing System* ➪ *76*.

If the vehicle has rollover roof-rail airbags, see *Different Size Tires and Wheels* ➪ *361* for additional important information.

If the vehicle must be modified because you have a disability and you have questions about whether the modifications will affect the vehicle's airbag system, or if you have questions about whether the airbag system will be affected if the vehicle is modified for any other reason, call Customer Assistance. See *Customer Assistance Offices* ➪ *410*.

Airbag System Check

Caution
If an airbag covering is damaged, opened, or broken, the airbag may not work properly. Do not open or break the airbag coverings. If there are any opened or broken airbag coverings, have the airbag covering and/or airbag module replaced. For the location of the airbags, see *Where Are the Airbags?* ➪ *72*. See your dealer for service.

The airbag system does not need regularly scheduled maintenance or replacement. Make sure the airbag readiness light is working. See *Airbag Readiness Light* ➪ *120*.

NOT FOR RESALE

Replacing Airbag System Parts After a Crash

⚠ Warning

A crash can damage the airbag systems in the vehicle. A damaged airbag system may not properly protect you and your passenger(s) in a crash, resulting in serious injury or even death. To help make sure the airbag systems are working properly after a crash, have them inspected and any necessary replacements made as soon as possible.

If an airbag inflates, you will need to replace airbag system parts. See your dealer for service.

If the airbag readiness light stays on after the vehicle is started or comes on when you are driving, the airbag system may not work properly. Have the vehicle serviced right away. See *Airbag Readiness Light* ➪ *120*.

Child Restraints

Older Children

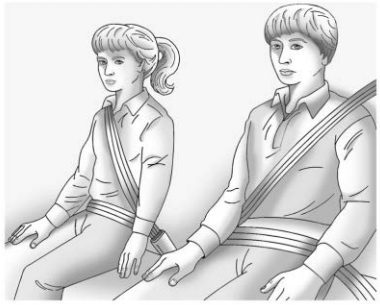

Older children who have outgrown booster seats should wear the vehicle seat belts. See *How to Wear Seat Belts Properly* ➪ *64*.

The manufacturer instructions that come with the booster seat state the weight and height limitations for that booster. Use a booster seat with a lap-shoulder belt until the child passes the fit test below:

- Sit all the way back on the seat. Do the knees bend at the seat edge? If yes, continue. If no, return to the booster seat.
- Buckle the lap-shoulder belt. Does the shoulder belt rest on the shoulder? If yes, continue. If no, try using the rear seat belt comfort guide, if available. See "Rear Seat Belt Comfort Guides" under *Lap-Shoulder Belt* ➪ *66*. If a comfort guide is not available, or if the shoulder belt still does not rest on the shoulder, then return to the booster seat.
- Does the lap belt fit low and snug on the hips, touching the thighs? If yes, continue. If no, return to the booster seat.
- Can proper seat belt fit be maintained for the length of the trip? If yes, continue. If no, return to the booster seat.

NOT FOR RESALE

Q: What is the proper way to wear seat belts?

A: An older child should wear a lap-shoulder belt and get the additional restraint a shoulder belt can provide. The shoulder belt should not cross the face or neck. The lap belt should fit snugly below the hips, just touching the top of the thighs. This applies belt force to the child's pelvic bones in a crash. It should never be worn over the abdomen, which could cause severe or even fatal internal injuries in a crash.

Also see "Rear Seat Belt Comfort Guides" under *Lap-Shoulder Belt* ➪ *66*.

According to accident statistics, children are safer when properly restrained in a rear seating position.

In a crash, children who are not buckled up can strike other people who are buckled up, or can be thrown out of the vehicle. Older children need to use seat belts properly.

⚠ Warning

Never allow more than one child to wear the same seat belt. The seat belt cannot properly spread the impact forces. In a crash, they can be crushed together and seriously injured. A seat belt must be used by only one person at a time.

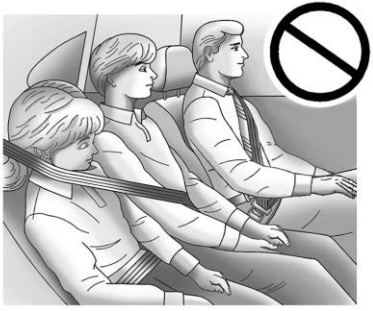

⚠ Warning

Never allow a child to wear the seat belt shoulder belt under both arms or behind their back. A child can be seriously injured by not wearing the lap-shoulder belt properly. In a crash, the child would not be restrained by the shoulder belt. The child could move too far forward increasing the chance of head and neck injury. The child might also slide under the lap belt. The belt force would then be applied right on the abdomen. That could cause serious or fatal injuries. The shoulder belt should go over the shoulder and across the chest.

NOT FOR RESALE

⚠ Warning

Children can be seriously injured or killed if the shoulder belt is worn behind their back, under their legs, or wrapped around their neck. The shoulder belt can tighten but cannot be loosened if it is locked. The shoulder belt locks when it is pulled all the way out of the retractor. It unlocks when the shoulder belt is allowed to go all the way back into the retractor, but it cannot do this if it is wrapped around the child. Never leave children unattended in a vehicle and never allow children to improperly wear, or play with, the seat belts.

Infants and Young Children

Everyone in a vehicle needs protection! This includes infants and all other children. Neither the distance traveled nor the age and size of the traveler changes the need, for everyone, to use safety restraints. In fact, the law in every state in the United States and in every Canadian province says children up to some age must be restrained while in a vehicle.

⚠ Warning

Children can be seriously injured or killed if the shoulder belt is worn behind their back, under their legs, or wrapped around their neck. The shoulder belt can tighten but cannot be loosened if it is locked. The shoulder belt locks when it is pulled all the way out of the retractor. It unlocks when the shoulder belt is allowed to go all the way back into the retractor, but it cannot do this if it is wrapped around the child. Never leave children unattended in a vehicle and never allow children to improperly wear, or play with, the seat belts.

Every time infants and young children ride in vehicles, they should have the protection provided by appropriate child restraints. Neither the vehicle seat belt system nor its airbag system is designed for them.

Children who are not restrained properly can strike other people, or can be thrown out of the vehicle.

⚠ Warning

Never hold an infant or a child while riding in a vehicle. Due to crash forces, an infant or a child will become so heavy it is not possible to hold it during a crash. For example, in a crash at only 40 km/h (25 mph), a 5.5 kg (12 lb) infant will suddenly become a 110 kg (240 lb) force on a person's arms. An infant or child should be secured in an appropriate child restraint.

NOT FOR RESALE

Warning

Children who are up against, or very close to, any airbag when it inflates can be seriously injured or killed. Never put a rear-facing child restraint in the front passenger seat. Secure a rear-facing child restraint in a rear seat.

It is also better to secure a forward-facing child restraint in a rear seat. If a forward-facing child restraint must be secured in the front passenger seat, always move the front passenger seat as far back as it will go.

If a child restraint is installed in the second row center seat, move the second row seat to the rearward position, whenever possible, to minimize contact with the front center airbag.

Warning

To reduce the risk of neck and head injury in a crash, infants and toddlers should be secured in a rear-facing child restraint until age two, or until they reach the maximum height and weight limits of their child restraint.

Warning

A young child's hip bones are still so small that the vehicle seat belt may not remain low on the hip bones, as it should. Instead, it may settle up around the child's abdomen. In a crash, the belt would apply force on a body area that is unprotected by any bony structure. This alone could cause serious or fatal injuries. To reduce the risk of serious or fatal injuries during a crash, young children should always be secured in an appropriate child restraint.

Child restraints are devices used to restrain, seat, or position children in the vehicle and are sometimes called child seats or car seats.

There are three basic types of child restraints:

- Forward-facing child restraints
- Rear-facing child restraints
- Belt-positioning booster seats

The proper child restraint for your child depends on their size, weight, and age, and also on whether the child restraint is compatible with the vehicle in which it will be used.

NOT FOR RESALE

For each type of child restraint, there are many different models available. When purchasing a child restraint, be sure it is designed to be used in a motor vehicle and is designed by a genuine child restraint manufacturer. If it is, the child restraint will have a label saying that it meets federal motor vehicle safety standards.

The instruction manual that is provided with the child restraint states the weight and height limitations for that particular child restraint. In addition, there are many kinds of child restraints available for children with special needs.

Child Restraint Systems

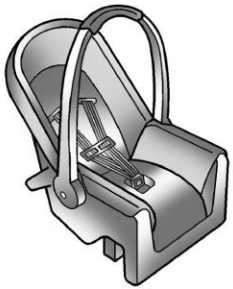

Rear-Facing Infant Restraint

A rear-facing child restraint provides restraint with the seating surface against the back of the infant.

The harness system holds the infant in place and, in a crash, acts to keep the infant positioned in the restraint.

Forward-Facing Child Restraint

A forward-facing child restraint provides restraint for the child's body with the harness.

NOT FOR RESALE

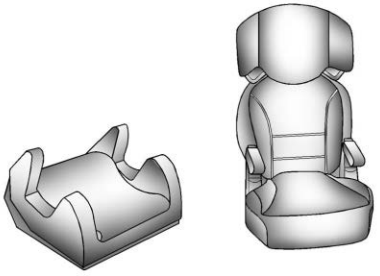

Booster Seats

A belt-positioning booster seat is used for children who have outgrown their forward-facing child restraint. Boosters are designed to improve the fit of the vehicle seat belt system until the child is large enough for the vehicle seat belts to fit properly without a booster seat. See the seat belt fit test in *Older Children* ➪ *81*.

Backless Booster

Backless booster fitment requirement:

Some backless booster seats are not suitable for rear seats that have oversized side seat bolsters, as they can push the backless booster forward from the seat back.

To use a backless booster:

1. Center the booster on the seat cushion.
2. Ensure the backless booster seat contacts the seat back.

If the backless booster does not meet the fit test described in Steps 1–2, select another booster seat.

Securing an Add-On Child Restraint in the Vehicle

⚠ Warning

Each top-tether anchor is designed to anchor only one child restraint. Do not attach more than one child restraint to a single top-tether anchor. The anchor may come loose or break, potentially causing personal injury, property damage, or death.

⚠ Warning

A child can be seriously injured or killed in a crash if the child restraint is not properly secured in the vehicle. Secure the child restraint properly in the vehicle using the vehicle seat belt or LATCH system, following the instructions that came with that child restraint and the instructions in this manual.

To help reduce the chance of injury, the child restraint must be secured in the vehicle. Child restraints must be secured in vehicle seats by the lap belt portion of a lap-shoulder belt, or by the LATCH system. See *Lower Anchors and*

NOT FOR RESALE

Tethers for Children (LATCH System) ⇨ *89* for more information. Never use a seat belt extender when installing a child restraint. Never use non-regulated aftermarket anchors or attachments to secure a child restraint. Children can be endangered in a crash if the child restraint is not properly secured in the vehicle.

When securing an add-on child restraint, see the following:

- Instruction labels provided on the child restraint
- Instruction manual provided with the child restraint
- This vehicle owner's manual

The child restraint instructions are important, so if they are not available, obtain a replacement copy from the manufacturer.

Keep in mind that an unsecured child restraint can move around in a collision or sudden stop and injure people in the vehicle. Be sure to properly secure any child restraint in the vehicle — even when no child is in it.

In some areas Certified Child Passenger Safety Technicians (CPSTs) are available to inspect and demonstrate how to correctly use and install child restraints. In the U.S., see the National Highway Traffic Safety Administration (NHTSA) website to locate the nearest child safety seat inspection station. For CPST availability in Canada, check with Transport Canada or the Provincial Ministry of Transportation office.

Securing the Child Within the Child Restraint

⚠ Warning

A child can be seriously injured or killed in a crash if the child is not properly secured in the child restraint. Secure the child properly following the instructions that came with that child restraint.

Where to Put the Restraint

According to accident statistics, children and infants are safer when properly restrained in an appropriate child restraint secured in a rear seating position.

Whenever possible, children aged 12 and under should be secured in a rear seating position.

The vehicle is equipped with a front center airbag in the inboard side of the driver seat. Even with a front center airbag, a child restraint can be installed in any second row seating position.

Never put a rear-facing child restraint in the front. This is because the risk to the rear-facing child is so great if the airbag deploys.

⚠ Warning

A child in a rear-facing child restraint can be seriously injured or killed if the front passenger airbag inflates. This is because the back of the rear-facing child restraint would be very close to the inflating airbag. A child in a forward-facing child restraint can be seriously injured or killed if the front passenger airbag inflates and the passenger seat is in a forward position.

Even if the passenger sensing system has turned off the front passenger frontal airbag, no system is fail-safe. No one can guarantee that an airbag will not deploy under some unusual circumstance, even though it is turned off.

(Continued)

NOT FOR RESALE

Warning (Continued)

Secure rear-facing child restraints in a rear seat, even if the airbag is off. If you secure a forward-facing child restraint in the front seat, always move the front passenger seat as far back as it will go. It is better to secure the child restraint in a rear seat.

See *Passenger Sensing System* ⇨ *76* for additional information.

If a child restraint is installed in a second row center seat, move the second row seat to the rearward position, whenever possible, to minimize contact with the front center airbag.

When securing a child restraint with the seat belts in a rear seat position, study the instructions that came with the child restraint to make sure it is compatible with this vehicle.

Child restraints and booster seats vary considerably in size, and some may fit in certain seating positions better than others. Do not install a child restraint in any rear seating position where it cannot be installed securely.

Depending on where you place the child restraint and the size of the child restraint, you may not be able to access adjacent seat belts or LATCH anchors for additional passengers or child restraints. Adjacent seating positions should not be used if the child restraint prevents access to or interferes with the routing of the seat belt.

Caution

Child restraints can scratch the surface and cause damage to the screens. Avoid contacting the screens with the child restraint.

Adjust the seat in front of a child restraint to ensure proper installation according to the child restraint manual. Move the front seat forward to avoid contact between the child restraint and the seat or any accessories mounted to the seat.

When installing a child restraint in an adjustable second row seating position, the seat should be adjusted as follows:

- Lower lumbar adjusted to the fully retracted position
- Adjust the seat forward or rearward to achieve proper installation per the child restraint manual. See *Second Row Seats* ⇨ *51*.

⚠ Warning

Do not use the folding tray table with any type of child restraint or booster installation in the rear seats. Contact with the folding tray table could result in injury. Return folding tray tables to the correct storage position before installing any child restraint or booster.

NOT FOR RESALE

⚠ Warning

To reduce risk of injury, adjust the reclining rear seat back to a near upright seating position according to the child restraint manufacturer instructions. The child restraint must rest against the seat back.

When installing a child restraint system in the third row, it may be necessary to pass the child restraint between the second row seats. To gain access to the third row use the rear infotainment home screen controls to tilt and slide the second row seats forward and rearward as necessary, see *Second Row Seats* ⇨ *51* for more information.

Wherever a child restraint is installed, be sure to follow the instructions that came with the child restraint and secure the child restraint properly.

Keep in mind that an unsecured child restraint can move around in a collision or sudden stop and injure people in the vehicle. Be sure to properly secure any child restraint in the vehicle — even when no child is in it.

Lower Anchors and Tethers for Children (LATCH System)

The LATCH system secures a child restraint during driving or in a crash. LATCH attachments on the child restraint are used to attach the child restraint to the anchors in the vehicle. This system is designed to make installation of a child restraint easier.

In order to use the LATCH system in your vehicle, you need a child restraint that has LATCH attachments. LATCH-compatible rear-facing and forward-facing child seats can be properly installed using either the LATCH anchors or the vehicle's seat belts. Do not use both the seat belts and the LATCH anchorage system to secure a rear-facing or forward-facing child restraint.

Booster seats use the vehicle's seat belts to secure the child and the booster seat. If the manufacturer recommends that the booster seat be secured with the LATCH system, this can be done as long as the booster seat can be positioned properly and there is no interference with the proper positioning of the lap-shoulder belt on the child.

Make sure to follow the instructions that came with the child restraint, and also the instructions in this manual.

When installing a child restraint with a top tether, you must also use either the lower anchors or the seat belts to properly secure the child restraint. A child restraint must never be attached using only the top tether.

NOT FOR RESALE

For a forward-facing five-point harness child restraint where the combined weight of the child and restraint are up to 29.5 kg (65 lb), use either the lower LATCH anchorages with the top tether anchorage, or the seat belt with the top tether anchorage. Where the combined weight of the child and restraint are greater than 29.5 kg (65 lb), use the seat belt with the top tether anchorage only.

Recommended Methods for Attaching Child Restraints

Restraint Type	Combined Weight of the Child + Child Restraint	Use Only Approved Attachment Methods Show with an X			
		LATCH-Lower Anchors Only	Seat Belt Only	LATCH-Lower Anchors and Top Tether Anchor	Seat Belt and Top Tether Anchor
Rear-Facing Child Restraint	Up to 29.5 kg (65 lb)	X	X		
Rear-Facing Child Restraint	Greater than 29.5 kg (65 lb)		X		
Forward-Facing Child Restraint	Up to 29.5 kg (65 lb)			X	X
Forward-Facing Child Restraint	Greater than 29.5 kg (65 lb)				X

See *Securing Child Restraints (With the Seat Belt in the Front Passenger Seat)* ⇨ *98 Securing Child Restraints (With the Seat Belt in the Rear Seat)* ⇨ *96*.

Child restraints built after March 2014 are labeled with the maximum child weight, with which the LATCH system can be used for installing the child restraint.

The following explains how to attach a child restraint with these attachments in the vehicle.

Not all vehicle seating positions have lower anchors. In this case, the seat belt must be used (with top tether where available) to secure the child restraint. See *Securing Child Restraints*

NOT FOR RESALE

(With the Seat Belt in the Front Passenger Seat) ➪ *98 Securing Child Restraints (With the Seat Belt in the Rear Seat)* ➪ *96*.

Lower Anchors

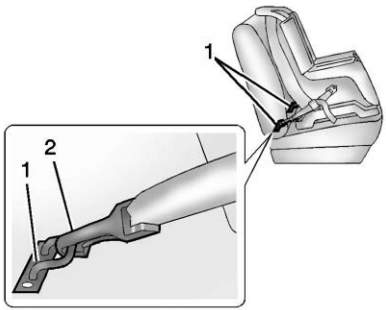

Lower anchors (1) are metal bars built into the vehicle. There are two lower anchors for each LATCH seating position that will accommodate a child restraint with lower attachments (2).

Top Tether Anchor

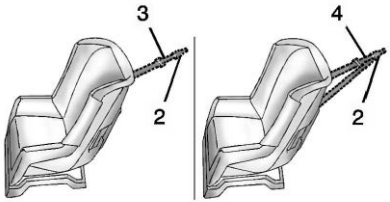

A top tether (3,4) is used to secure the top of the child restraint to the vehicle. A top tether anchor is built into the vehicle. The top tether attachment hook (2) on the child restraint connects to the top tether anchor in the vehicle in order to reduce the forward movement and rotation of the child restraint during driving or in the event of a crash.

The child restraint may have a single tether (3) or a dual tether (4). Either will have a single attachment hook (2) to secure the top tether to the anchor.

Some child restraints with a top tether are designed for use with or without the top tether being attached. Others require the top tether always to be attached. In Canada, the law requires that forward-facing child restraints have a top tether, and that the tether be attached. Be sure to read and follow the instructions for your child restraint.

Lower Anchor and Top Tether Anchor Locations

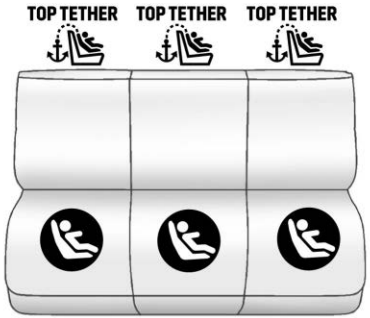

Second Row — 60/40

: Seating positions with two lower anchors.

TOP TETHER : Seating positions with top tether anchors.

NOT FOR RESALE

The lower anchors are located in the crease between the seatback and seat cushion.

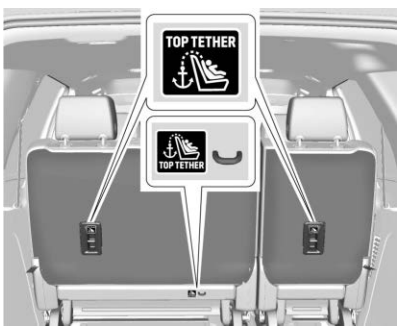

The top tether anchors are on the rear of the seatback for the outboard seating positions and the rear of the seat cushion for the center seating position in the second row. Be sure to use an anchor located directly behind the seating position where the child restraint will be placed.

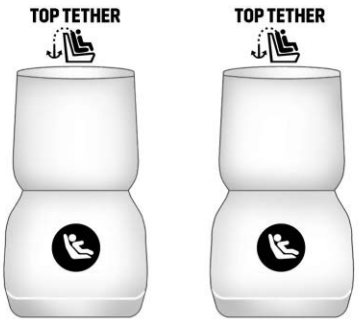

Second Row — Bucket

: Seating positions with two lower anchors.

TOP TETHER : Seating positions with top tether anchors.

For non-executive seats, the lower anchors are located in the crease between the seatback and seat cushion.

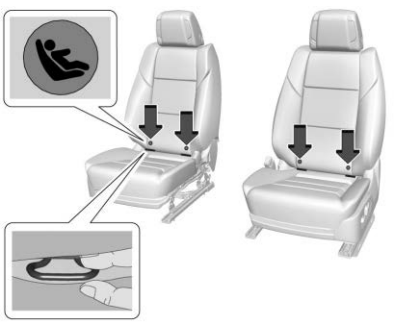

NOT FOR RESALE

Executive seating lower anchors are in the crease between the seatback and the seat cushion. Push the seatback trim up at the crease to access the lower anchor.

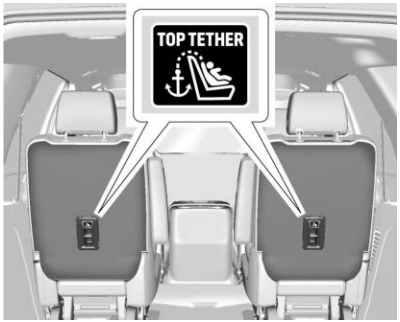

For non-executive seats, the top tether anchors are on the rear of the seatback for each seating position in the second row. Be sure to use an anchor located directly behind the seating position where the child restraint will be placed.

Executive seating top tether anchors are on the lower structure of seat back behind a fabric slit. Slide the seat forward to access the anchor. Be sure to use an anchor located directly behind the seating position where the child restraint will be placed. See *Second Row Seats* ⇨ *51*.

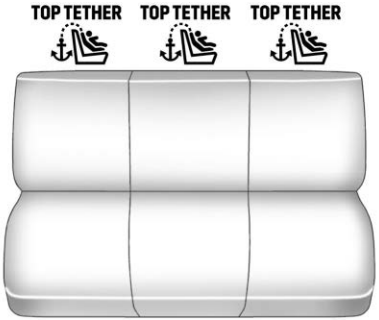

Third Row Seat

TOP TETHER : Seating positions with top tether anchors.

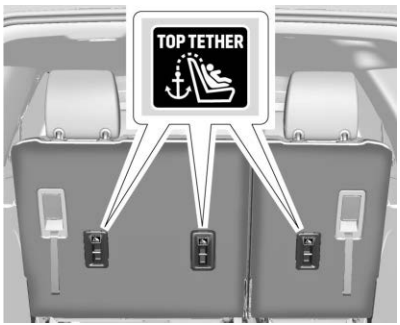

NOT FOR RESALE

For the third row seat, the top tether anchors are on the back of the seatback. Be sure to use an anchor located directly behind the seating position where the child restraint will be placed.

For models with a cargo cover, the top tether anchors are on the back of the rear seatbacks. Remove the cargo cover before installing the top tether. The cargo cover should remain off while the top tether is in use. Be sure to use an anchor directly behind the seating position where the child restraint will be placed.

Do not secure a child restraint in a position without a top tether anchor if a national or local law requires that the top tether be attached, or if the instructions that come with the child restraint say that the top tether must be attached.

According to accident statistics, children and infants are safer when properly restrained in a child restraint system or infant restraint system secured in a rear seating position.

See *Where to Put the Restraint* ➪ *87* for additional information.

Securing a Child Restraint Designed for the LATCH System

⚠ Warning

A child could be seriously injured or killed in a crash if the child restraint is not properly attached to the vehicle using either the LATCH anchors or the vehicle seat belt. Follow the instructions that came with the child restraint and the instructions in this manual.

⚠ Warning

To reduce the risk of serious or fatal injuries during a crash, do not attach more than one child restraint to a single anchor. Attaching more than one child restraint to a single anchor could cause the anchor or attachment to come loose or even break during a crash. A child or others could be injured.

⚠ Warning

Children can be seriously injured or strangled if a shoulder belt is wrapped around their neck. The shoulder belt can tighten but cannot be loosened if it is locked. The shoulder belt locks when it is pulled all the way out of the retractor. It unlocks when the shoulder belt is allowed to go all the way back into the retractor, but it cannot do this if it is wrapped around a child's neck. If the shoulder belt is locked and tightened around a child's neck, the only way to loosen the belt is to cut it.

Buckle any unused seat belts behind the child restraint so children cannot reach them. Pull the shoulder belt all the way out of the retractor to set the lock, and tighten the belt behind the child restraint after the child restraint has been installed.

NOT FOR RESALE

Caution

Do not let the LATCH attachments rub against the vehicle's seat belts. This may damage these parts. If necessary, move buckled seat belts to avoid rubbing the LATCH attachments.

Do not fold the rear seatback when the seat is occupied. Do not fold the empty rear seat with a seat belt buckled. This could damage the seat belt or the seat. Unbuckle and return the seat belt to its stowed position, before folding the seat.

The vehicle is equipped with a front center airbag in the inboard side of the driver seat. Even with a front center airbag, a child restraint can be installed in any second row seating position. If a child restraint is installed in a second row center seat, move the second row seat to the rearward position, whenever possible, to minimize contact with the front center airbag.

If you need to secure more than one child restraint in the rear seat, see *Where to Put the Restraint* ⇨ *87*.

1. Attach and tighten the lower attachments to the lower anchors. If the child restraint does not have lower attachments or the desired seating position does not have lower anchors, secure the child restraint with the seat belt and top tether when recommended by the child restraint manufacturer. Refer to your child restraint manufacturer instructions and the instructions in this manual.
   - 1.1 Find the lower anchors for the desired seating position.
   - 1.2 Put the child restraint on the seat.
   - 1.3 Attach and tighten the lower attachments on the child restraint to the lower anchors.
2. If the child restraint manufacturer recommends that the top tether be attached, adjust the top tether to its full length and attach it to the anchor. Refer to the child restraint instructions and the following steps:
   - 2.1 Find the top tether anchor.
   - 2.2 Route, attach, and tighten the top tether according to your child restraint instructions and the following instructions:

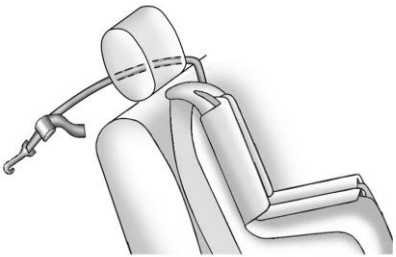

   - 2.3 If the position you are using has a fixed headrest or head restraint and you are using a single tether, route the tether around the inboard or outboard side of the headrest or head restraint.

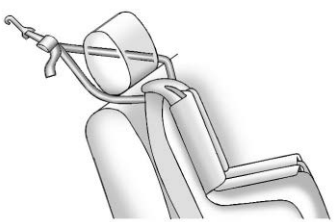

NOT FOR RESALE

If the child restraint is installed next to a center seat, make sure the top tether does not interfere with the center seating position shoulder belt/retractor. If it does, find another suitable seating position to install the child restraint.

3. Before placing a child in the child restraint, make sure it is securely held in place. To check, firmly grip the child restraint at the LATCH path and attempt to move it side to side and back and forth. There should be no more than 2.5 cm (1 in) of movement, for proper installation.

Replacing LATCH System Parts After a Crash

⚠ Warning

A crash can damage the LATCH system in the vehicle. A damaged LATCH system may not properly secure the child restraint, resulting in serious injury or even death in a crash. To help make sure the LATCH system is working properly after a crash,

(Continued)

Warning (Continued)

see your dealer to have the system inspected and any necessary replacements made as soon as possible.

If the vehicle has the LATCH system and it was being used during a crash, new LATCH system parts may be needed.

New parts and repairs may be necessary even if the LATCH system was not being used at the time of the crash.

Securing Child Restraints (With the Seat Belt in the Rear Seat)

The vehicle is equipped with a front center airbag in the inboard side of the driver seat. Even with a front center airbag, a child restraint can be installed in any second row seating position. If you install a child restraint in a second row center seat, move the second row seat to the rearward position, whenever possible, to minimize contact with the front center airbag.

When securing a child restraint with the seat belts in a rear seat position, study the instructions that came with the child restraint to make sure it is compatible with this vehicle.

If the child restraint has the LATCH system, see *Lower Anchors and Tethers for Children (LATCH System)* ⇨ *89* for how and where to install the child restraint using LATCH. If a child restraint is secured in the vehicle using a seat belt and it uses a top tether, see *Lower Anchors and Tethers for Children (LATCH System)* ⇨ *89* for top tether anchor locations.

Do not secure a child seat in a position without a top tether anchor if a national or local law requires that the top tether be anchored, or if the instructions that come with the child restraint say that the top strap must be anchored. See the instructions that came with the child restraint and see *Lower Anchors and Tethers for Children (LATCH System)* ⇨ *89*.

In Canada, the law requires that forward-facing child restraints have a top tether, and that the tether be attached.

NOT FOR RESALE

If the child restraint or vehicle seat position does not have the LATCH system, you will be using the seat belt to secure the child restraint. Be sure to follow the instructions that came with the child restraint.

If more than one child restraint needs to be installed in the rear seat, be sure to read *Where to Put the Restraint* ⇨ 87.

1. Put the child restraint on the seat.
2. Pick up the latch plate and run the lap and shoulder portions of the vehicle seat belt through or around the child restraint. Ensure the seat belt webbing is routed as directly as possible and is not caught on seat handles or plastic trim. The child restraint instructions will show you how.

3. Push the latch plate into the buckle until it clicks.

   Position the release pushbutton on the buckle, away from the child restraint, so that the seat belt could be quickly unbuckled if necessary.
4. The rear seat should be adjusted to the rearmost position before using the locking retractor or child restraint lock off devices.

5. Pull the shoulder belt all the way out of the retractor to set the lock. When the retractor lock is set, the belt can be tightened but not pulled out of the retractor.

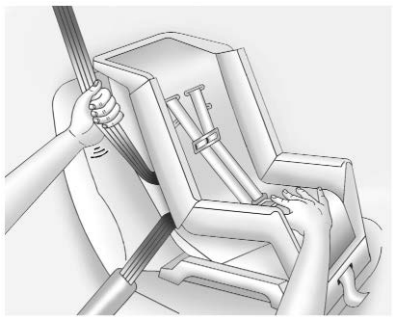

NOT FOR RESALE

6. To tighten the belt, push down on the child restraint, pull the shoulder portion of the belt to tighten the lap portion of the belt, and feed the shoulder belt back into the retractor. When installing a forward-facing child restraint, it may be helpful to use your knee to push down on the child restraint as you tighten the belt.

   There must not be direct contact of the child restraint to the buckle release pushbutton. If there is contact, reposition the child restraint using the instructions that came with the child restraint. If there is still contact, use another seating position or child restraint.

   Try to pull the belt out of the retractor to make sure the retractor is locked. If the retractor is not locked, repeat Steps 5 and 6.

7. Tighten the top tether. See *Lower Anchors and Tethers for Children (LATCH System)* ➪ *89*.

8. If the child restraint has a top tether, follow the child restraint manufacturer's instructions regarding the use of the top tether. See *Lower Anchors and Tethers for Children (LATCH System)* ➪ *89*.

9. Before placing a child in the child restraint, make sure it is securely held in place. To check, firmly grip the child restraint at the seat belt path and attempt to move it side to side and back and forth. When the child restraint is properly installed, there should be no more than 2.5 cm (1 in) of movement.

To remove the child restraint, unbuckle the vehicle seat belt and let it return to the stowed position. If the top tether is attached to a top tether anchor, disconnect it.

Many child restraints are too wide to be correctly secured in the center rear seat, although some will fit there. If the center seat position is too narrow for the child restraint, secure it in a rear outboard seat position.

If a rear-facing child restraint is installed in the rear center seat, ensure that the second-row arm rest remains in the stowed (closed) position. If the arm rest cannot be stowed, or if the armrest can open fully, install the child restraint in another seating position.

Securing Child Restraints (With the Seat Belt in the Front Passenger Seat)

This vehicle has airbags. A rear seat is a safer place to secure a forward-facing child restraint. See *Where to Put the Restraint* ➪ *87*.

In addition, the vehicle has a passenger sensing system which is designed to turn off the front outboard passenger frontal airbag under certain conditions. See *Passenger Sensing System* ➪ *76* and *Passenger Airbag Status Indicator* ➪ *121* for more information, including important safety information.

Never put a rear-facing child restraint in the front. This is because the risk to the rear-facing child is so great, if the airbag deploys.

⚠ Warning

A child in a rear-facing child restraint can be seriously injured or killed if the front outboard passenger frontal airbag inflates. This is because the back of the rear-facing child restraint would be very close to the

(Continued)

NOT FOR RESALE

Warning (Continued)

inflating airbag. A child in a forward-facing child restraint can be seriously injured or killed if the front outboard passenger frontal airbag inflates and the passenger seat is in a forward position.

Even if the passenger sensing system has turned off the front outboard passenger frontal airbag, no system is fail-safe. No one can guarantee that an airbag will not deploy under some unusual circumstance, even though it is turned off.

Secure rear-facing child restraints in a rear seat, even if the airbag is off. If you secure a forward-facing child restraint in the front outboard passenger seat, always move the seat as far back as it will go. It is better to secure the child restraint in a rear seat.

See *Passenger Sensing System* ⇨ *76* for additional information.

If the child restraint uses a top tether, see *Lower Anchors and Tethers for Children (LATCH System)* ⇨ *89* for top tether anchor locations.

Do not secure a child seat in a position without a top tether anchor if a national or local law requires that the top tether be anchored, or if the instructions that come with the child restraint say that the top tether must be anchored.

In Canada, the law requires that forward-facing child restraints have a top tether, and that the tether be attached.

When using the lap-shoulder belt to secure the child restraint in this position, follow the instructions that came with the child restraint and the following instructions:

⚠ Warning

If equipped, the second row passenger can create more legroom by moving the front passenger seat with controls located on the rear center display screen. To prevent serious injury or death in a crash, do not permit a rear seat passenger to move the front seat if someone is seated there. Disable the controls by activating Rear Control Lock from the front center display screen.

1. Move the seat as far back as it will go before securing the forward-facing child restraint. Move the seat upward or the seatback to an upright position, if needed, to get a tight installation of the child restraint.

   When the passenger sensing system has turned off the front outboard passenger frontal airbag, the OFF indicator on the passenger airbag status indicator should light and stay lit when you start the vehicle. See *Passenger Airbag Status Indicator* ⇨ *121*.

2. Put the child restraint on the seat.
3. Pick up the latch plate and run the lap and shoulder portions of the vehicle seat belt through or around the restraint. Ensure the seat belt webbing is routed as direct as possible and is not caught on seat handles or plastic trim. The child restraint instructions will show you how.

NOT FOR RESALE

4. Push the latch plate into the buckle until it clicks.

   Position the release pushbutton on the buckle, away from the child restraint, so that the seat belt could be quickly unbuckled if necessary.

5. Pull the shoulder belt all the way out of the retractor to set the lock. When the retractor lock is set, the belt can be tightened but not pulled out of the retractor.

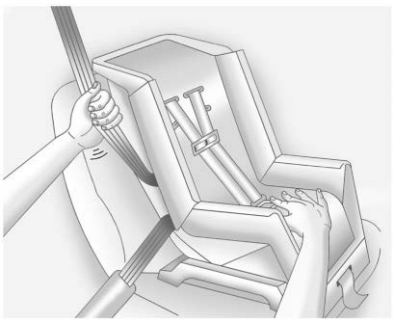

6. To tighten the belt, push down on the child restraint, pull the shoulder portion of the belt to tighten the lap portion of the belt, and feed the shoulder belt back into the retractor.

   When installing a forward-facing child restraint, it may be helpful to use your knee to push down on the child restraint as you tighten the belt.

   There must not be direct contact of the child restraint to the buckle release pushbutton. If there is contact, reposition the child restraint using the instructions that came with the child restraint. If there is still contact, use another seating position or child restraint.

   Try to pull the belt out of the retractor to make sure the retractor is locked. If the retractor is not locked, repeat Steps 5 and 6.

7. Before placing a child in the child restraint, make sure it is securely held in place. To check, firmly grip the child restraint at the seat belt path and attempt to move it side to side and back and forth. When the child restraint is properly installed, there should be no more than 2.5 cm (1 in) of movement.

NOT FOR RESALE

If the airbag is off, the OFF indicator in the passenger airbag status indicator will come on and stay on when the vehicle is started.

If a child restraint has been installed and the ON indicator is lit, see "If the On Indicator Is Lit for a Child Restraint" under *Passenger Sensing System* ⇨ *76*.

To remove the child restraint, unbuckle the vehicle seat belt and let it return to the stowed position.

NOT FOR RESALE

Storage

Storage Compartments
Storage Compartments 102
Glove Box 102
Cupholders 102
Rear Storage 103
Center Console Storage 104
Additional Storage Features
Cargo Tie-Downs 107
Convenience Net 107
Roof Rack System
Roof Rack System 107

Storage Compartments

⚠ Warning

Do not store heavy or sharp objects in storage compartments. In a crash, these objects may cause the cover to open and could result in injury.

Glove Box

To open the glove box, press the Glove Box Release button on the controls home page of the infotainment screen or tap Controls > Doors & Windows > Glove Box Release.

If the vehicle is stationary, a Glove Box Release icon appears on the infotainment home screen. Tap the icon to open the glove box.

If the vehicle is off, you can still open the glove box. Press the volume button on the Multi-function Controller (MFC) to wake the infotainment home screen and access the virtual Glove Box Release button.

To close the glove box, push the glove box up until it latches.

If the 12-volt battery is dead, the glove box will not open. See *Jump Starting - North America* ⇨ *377*.

Cupholders

There are cupholders in the front and second row consoles.

NOT FOR RESALE

Rear Cupholders

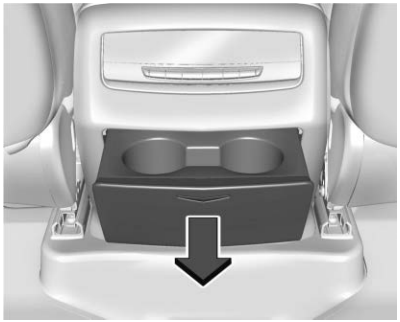

If equipped with cupholders in the back center console, press the cover and release to access. There may be two USB ports, two HDMI ports, and a power outlet on the back of the center console.

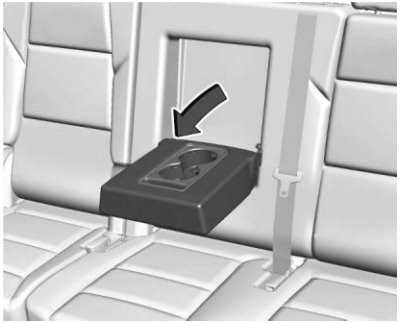

If equipped, the rear seat armrest may have cupholders. Pull the armrest down to access the cupholders.

Rear Storage

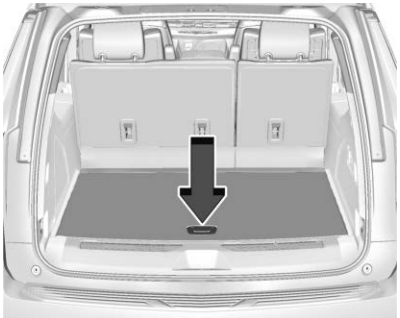

There is storage in the floor of the rear cargo area. Lift the handle to access.

NOT FOR RESALE

Center Console Storage

Press the button and lift to open. There is an auxiliary jack, USB ports, an accessory power outlet, a tote compartment, and a device holder inside.

On the rear of the console there are auxiliary jacks, a power outlet, and a storage area.

See *Power Outlets* ⇨ *113* and the infotainment section.

Center Console Refrigerator/Freezer

⚠ Warning

Do not store glass and aluminum containers inside the bin when in freezer mode. Glass and aluminum containers can break when their contents are frozen. Use caution removing broken containers to avoid personal injury.

⚠ Warning

Do not touch bin surfaces with wet or damp hands while the freezer is on. Skin could stick to the bin surface.

Caution

Do not put any objects between the front seats and the center console side walls. The air path could be blocked and cause the unit to stop working.

If equipped with a center console refrigerator/freezer, lift the armrest to access. A light will turn on when the armrest is up.

The refrigerator/freezer mode can only be used while the engine is running. If the vehicle is turned off and turned back on again, the last operating mode will be resumed.

To use in refrigerator mode, press the button once. One light on the button will be lit. The operating temperature is 5°C (41°F).

To use in freezer mode, press the button twice. Two lights on the button will be lit. The operating temperature is -5°C (23°F).

NOT FOR RESALE

To turn off the refrigerator or freezer, press the button until its lights are off. The bin light can turn on when the refrigerator/freezer is off.

The bottom mat is removable. Clean with water and mild soap.

Clean the refrigerator/freezer bin while the vehicle and the feature are turned off. Use a damp, soft rag and wipe the bin carefully. Do not scratch or puncture the bin surfaces.

Rear Console Storage

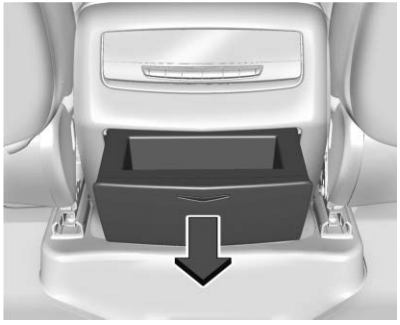

If equipped with storage in the back center console, press the cover and release to access. There may be two USB ports, two HDMI ports, and a power outlet on the back of the center console.

Rear Console Folding Tray Tables

⚠ Warning

Do not use the folding tray table with any type of child restraint or booster installation in the rear seats. Contact with the folding tray table could result in injury. Return folding tray tables to the correct storage position before installing any child restraint or booster.

⚠ Warning

The folding tray table can press into the abdomen, harming a pregnant woman and fetus and putting them at risk for injury. Pregnant women should not use the folding tray tables.

⚠ Warning

Fingers can be pinched when opening and closing the folding tray tables. To reduce the risk of pinching, open and close the folding tray tables carefully.

⚠ Warning

Open folding tray tables may be damaged or cause injury to rear seat passengers when the front seats are moved rearward. Be careful when adjusting the front seats to avoid passenger injury or damage to the folding tray tables or seats. If necessary, stow the folding tray tables when moving the front seats rearward.

⚠ Warning

The folding tray tables are not designed to sit/stand on and cannot hold more than 40 kg (89 lb.). Do not sit/stand on the folding tray tables, as this could result in possible injury or damage to the tray table.

⚠ Warning

Objects placed on, or attached to, the folding tray tables may cause injury to you or others or damage the vehicle in the event of a crash or sudden braking/maneuvering.

NOT FOR RESALE

Caution

The folding tray tables are intended to be opened one at a time. Opening both folding tray tables at the same time could damage the tables. Do not open both folding tray tables simultaneously.

Caution

Overloading the folding tray tables can damage them. When using the folding tray tables, do not exceed the maximum load rating of 40 kg (89 lb).

Caution

Objects placed in the rear center console bin when the folding tray tables are open could be damaged when the folding tray tables are closed. Remove all objects from the rear center console bin before closing the folding tray tables.

If equipped, there are two folding tray tables in the rear center console.

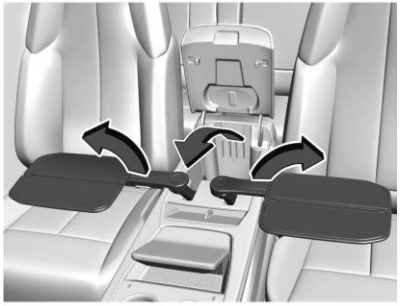

To access the stowed folding tray tables:

1. Lift the armrest to open the rear center console.
2. Press the button inside the console bin to unlock the folding tray tables. The folding tray tables must be released one at a time.
3. Rotate the folding tray table until the lower arm is upright.
4. Rotate the tables to be horizontal.
5. Slide the folding tray table outward.
6. Unfold the tray table.

When deployed, the folding tray tables can rotate forward to allow entry and exit into the vehicle.

NOT FOR RESALE

To stow the folding tray tables:

1. Fold the tray table. The folding tray tables must be stowed one at a time.
2. Slide the folding tray table inward.
3. Pull the folding tray table arm upright.
4. Rotate the folding tray table rearward until the lower arm reaches the stowed position.
5. Press the folding tray table down to lock.
6. Close the rear center console armrest.

Additional Storage Features

Cargo Tie-Downs

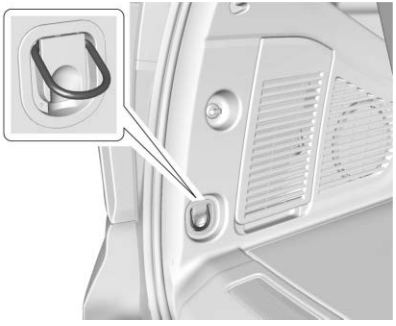

There are two cargo tie-downs in the rear cargo area. These can be used to strap cargo down and keep it from moving inside the vehicle.

Convenience Net

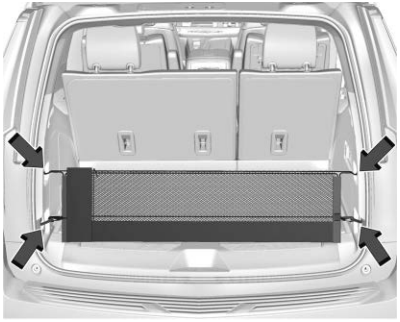

This vehicle may have a convenience net in the rear of the vehicle. Attach it to the cargo tie-downs for storing small loads.

Do not use the net to store heavy loads.

Roof Rack System

This vehicle may be equipped with side-rails for a roof rack system.

⚠ Warning

Before driving, check that cargo is securely fastened, rests evenly between the cross rails, and does not block the vehicle's lights or windows. Never load cargo directly on the roof of the vehicle or allow cargo to hang over the rear or sides of the vehicle. Never load cargo without first properly installing cross rails and other accessories designed to carry cargo, which can be purchased from your dealer. If driving for a long distance, on rough roads, or at high speeds, occasionally stop the vehicle to make sure the cargo remains in its place. Personal injury, death, or damage to the vehicle or other property may occur.

Cargo Weight Limits

⚠ Warning

Never load the roof rack with more weight than specified in this section. Loading cargo on the roof rack will make the vehicle's center of gravity higher. To avoid losing

(Continued)

NOT FOR RESALE

Warning (Continued)

control of the vehicle, avoid overloading, high speeds, sudden starts, sharp turns, sudden braking, or abrupt maneuvers when carrying cargo on the roof rack.

The maximum cargo weight that can be loaded onto the roof rack system is 100 kg (220 lb) or the weight designated in the instructions that came with the cross rails or other roof rack accessories, whichever is less. The maximum cargo weight includes the weight of the cross rails and any other accessories used to carry the cargo such as bike racks or roof boxes.

The weight of any cargo carried on the roof rack system must be included in calculating the loaded weight of the vehicle. Do not exceed the maximum vehicle capacity when loading the vehicle, including passengers and cargo carried in the vehicle. For more information on vehicle capacity and loading, see *Vehicle Load Limits* ⇨ *200*.

NOT FOR RESALE

Instruments and Controls

Controls

Steering Wheel Adjustment 110
Heated Steering Wheel 110
Horn 110
Windshield Wiper/Washer 110
Rear Window Wiper/Washer 112
Compass 113
Clock 113
Power Outlets 113
Wireless Charging 114

Warning Lights, Gauges, and Indicators

Warning Lights, Gauges, and Indicators .. 116
Instrument Cluster 117
Speedometer 118
Odometer 118
Trip Odometer 118
Tachometer 118
Fuel Gauge 118
Seat Belt Reminders 119
Airbag Readiness Light 120
Passenger Airbag Status Indicator 121
Charging System Light 121
Malfunction Indicator Light (Check Engine Light) 122
Brake System Warning Light 123
Electric Parking Brake Light 124
Service Electric Parking Brake Light 124
Antilock Brake System (ABS) Warning Light 124
Four-Wheel-Drive Light 124
Automatic Vehicle Hold (AVH) Light 125
Lane Keep Assist (LKA) Light 125
Hands-On Steering Assist Light (Lane Centering Assistance) 125
Automatic Emergency Braking (AEB) Disabled Light 126
Vehicle Ahead Indicator 126
Pedestrian Ahead Indicator 126
Follow Distance Indicator Light 126
Traction Off Light 127
Traction Control System (TCS)/ Electronic Stability Control Light 127
Electronic Stability Control (ESC) Off Light 127
Engine Coolant Temperature Warning Light 128
Driver Mode Control Light 128
Air Suspension Light 129
Tire Pressure Light 129
Engine Oil Pressure Light 130
Low Fuel Warning Light 130
Auto Stop Indicator 131
Security Light 131
High-Beam On Light 131
Service Headlight System Indicator 131
Lights On Reminder 132
Cruise Control Light 132
Adaptive Cruise Control Light 132
Super Cruise Light 132
Door Ajar Light 132

Information Displays

Driver Information Center (DIC) 132
Vehicle Status 135
Head-Up Display (HUD) 137

Vehicle Messages

Vehicle Messages 139
Engine Power Messages 139
Vehicle Speed Messages 139

Universal Remote System

Universal Remote System Programming (Garage Door Opener) ... 140
Universal Remote System Operation (Garage Door Opener) 142

NOT FOR RESALE

Controls

Steering Wheel Adjustment

To adjust the power tilt and telescoping steering wheel:

Press the control to move the steering wheel up and down or forward and rearward.

Do not adjust the steering wheel while driving.

Heated Steering Wheel

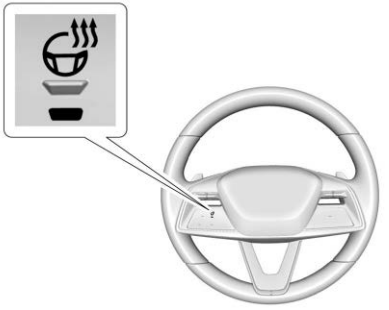

: If equipped, press to turn the heated steering wheel on or off. An indicator next to the button is lit when the feature is turned on.

The steering wheel takes about three minutes to start heating.

Automatic Heated Steering Wheel

If equipped with remote start, the heated steering wheel may turn on during a remote start along with the heated seats when it is cold outside. The heated steering wheel indicator may come on in remote start.

If equipped with auto heated seats, the heated steering wheel will turn on when the auto heated seat is activated. The heated steering wheel indicator will display the state of the steering wheel heat. See *Heated and Ventilated Front Seats* ⇨ *50*.

Horn

To sound the horn, press on the steering wheel.

Windshield Wiper/Washer

⚠ Warning

In freezing weather, do not use the washer until the windshield is warmed. Otherwise the washer fluid can form ice on the windshield, blocking your vision.

⚠ Warning

Before driving the vehicle, always clear snow and ice from the hood, windshield, washer nozzles, roof, and rear of the vehicle,

(Continued)

NOT FOR RESALE

Warning (Continued)

including all lights and windows. Reduced visibility from snow and ice buildup could lead to a crash.

This vehicle is equipped with Rainsense.
A sensor near the top center of the windshield detects the amount of water on the windshield and controls the frequency of the windshield wiper based on the current wiper speed. Keep this area of the windshield clear of debris to allow for best system performance.

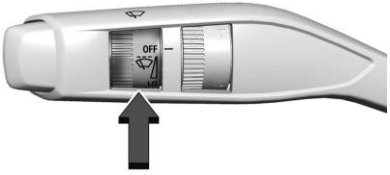

With the vehicle on, turn the windshield wiper band to select the wiper speed.

OFF: Use to turn the wipers off.

LO: Use for slow wipes.

HI: Use for fast wipes.

Turn the band to select the frequency of intermittent wipes between OFF and LO.

Clear snow and ice from the entire windshield and wiper blades before using them. If frozen to the windshield, carefully loosen or thaw them. Damaged blades should be replaced. See *Wiper Blade Replacement* ⇨ *329*.

Heavy snow or ice may restrict wiper operation and can overload the wiper motor.

Wiper Arm Assembly Protection

When using an automatic car wash, move the windshield wiper lever to OFF. This disables the automatic Rainsense windshield wipers.

With Rainsense, if the vehicle is in N (Neutral) and the speed is very slow, the wipers will automatically stop at the base of the windshield.

The wiper operations return to normal when the vehicle is no longer in N (Neutral) or the vehicle speed has increased.

Windshield Washer

> : For a single wipe, push the button on the side of the windshield to the first stop position briefly and then release. For several wipes, keep holding at the first stop position for longer and then release.

≫ : Push the button on the side of the windshield wiper lever all the way to the end, beyond the first stop position, to spray washer fluid and activate the wipers. When the button is released, additional wipes may occur depending on how long the windshield washer had been activated. See *Washer Fluid* ⇨ *324* for information on filling the windshield washer fluid reservoir.

Wiper Parking

If the vehicle is off while the wipers are on LO or HI, they will immediately stop.

NOT FOR RESALE

If the windshield wiper lever is then moved to OFF before the driver door is opened or within 10 minutes, the wipers will restart and move to the base of the windshield.

If the vehicle is off while the wipers are active due to windshield washing or Rainsense, the wipers continue until they reach the base of the windshield.

Heated Wiper Parking

This feature warms the lower area of the windshield where the wiper blades park when the rear window defogger is on, helping to remove frost from the wipers.

: The rear window defogger button is on the climate control panel.

See "Rear Window Defogger" under *Climate Control Systems* ⇨ *183*.

Night Vision Camera Washer

If equipped with the night vision system, activate the front windshield washer five times to clean the camera sensor. It must be dark enough outside for the system to operate.

See *Night Vision System* ⇨ *292* for information on using the night vision system.

Rear Window Wiper/Washer

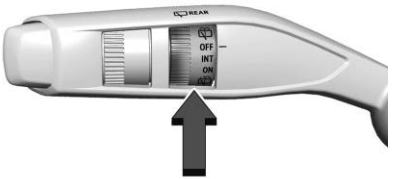

The rear window wiper/washer controls are on the end of the windshield wiper lever.

Turn the controls to adjust the setting.

OFF: Turns the wiper off.

INT: Turns on the rear wiper with a delay between wipes.

ON: Turns on the rear wiper.

: Turn the band to to spray washer fluid on the rear window and any rear cameras, if equipped. Release the band when done.

The windshield washer reservoir is used for the windshield, rear window, and any rear cameras. See *Rear Camera Mirror* ⇨ *34*. Check the fluid level in the reservoir if either washer is not working. See *Washer Fluid* ⇨ *324* for information on filling the windshield washer fluid reservoir.

The rear window wiper/washer will not operate if the liftgate is open. If the liftgate is opened while the rear wiper is on, the wiper returns to the parked position and stops.

Rear Wiper Arm Assembly Protection

When using an automatic car wash, move the rear wiper control to OFF to disable the rear wiper. In some vehicles, if the vehicle is in N (Neutral) and the vehicle speed is very slow, the rear wiper will automatically park under the rear spoiler.

The wiper operations return to normal when the vehicle is no longer in N (Neutral) or the vehicle speed has increased.

Auto Wipe in Reverse Gear

If the rear wiper control is off, the rear wiper will automatically operate continuously when the vehicle is in R (Reverse), and the front windshield wiper is performing low or high speed wipes. If the rear wiper control is off, the vehicle is in R (Reverse), and the front

NOT FOR RESALE

windshield wiper is performing INT wipes, then the rear wiper automatically performs INT wipes.

This feature can be turned on or off in the infotainment home screen by selecting Settings > Vehicle > Comfort and Convenience > Auto Wipe in Reverse Gear.

Compass

The vehicle may have a compass display on the instrument cluster. The compass receives its heading and other information from the Global Positioning System (GPS) antenna, StabiliTrak/ Electronic Stability Control (ESC), and vehicle speed information.

The compass system is designed to operate for a certain number of miles or degrees of turn before needing a signal from the GPS satellites. When the compass display shows CAL, drive the vehicle to a clear, unobstructed view of the sky in all directions where it can receive a GPS signal. The compass system will automatically determine when a GPS signal is restored and provide a heading again.

Clock

Set the time and date using the infotainment system. See "Date/Time" under *Settings* ⇨ *174*.

Power Outlets

Caution

Leaving electrical equipment plugged in for an extended period of time while the vehicle is off will drain the battery. Always unplug electrical equipment when not in use and do not plug in equipment that exceeds the maximum 15 amp rating.

Caution

Hanging heavy equipment from the power outlet can cause damage not covered by the vehicle warranty. The power outlets are designed for accessory power plugs only, such as cell phone charge cords.

Power Outlets 12-Volt Direct Current

Accessory power outlets can be used to plug in electrical equipment, such as a cell phone or MP3 player.

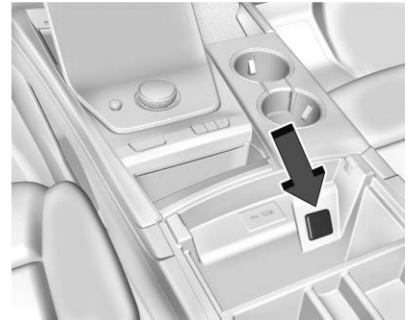

If equipped, the vehicle has one accessory power outlet inside the center console.

Lift the cover to access and replace when not in use.

The accessory power outlets are powered as follows:

- The power outlets are powered when the vehicle is started or the ignition is in accessory mode, or until the driver door is opened within 10 minutes of turning off the vehicle. See *Retained Accessory Power (RAP)* ⇨ *209*.

NOT FOR RESALE

Certain power accessory plugs may not be compatible with the accessory power outlet and could overload vehicle or adapter fuses. If a problem is experienced, see your dealer.

When adding electrical equipment, be sure to follow the proper installation instructions included with the equipment. See *Add-On Electrical Equipment* ➪ *307*.

Power Outlet 110/120 Volt Alternating Current

If equipped, the vehicle has two alternating current power outlets.

- Rear storage area
- Back of the center console

When the ignition is on, power to the 110/120 Volt outlet is enabled. 110 Volts is supplied to the outlet when it is enabled and electrical equipment is plugged into that outlet. One power outlet can be used with electrical equipment that uses a maximum of 400 watts.

Ensure that all connected devices do not exceed 400 watts.

An indicator light on the outlet illuminates when the outlet is enabled and no system fault is detected. The outlet will not provide power when the ignition is off or the plug is not fully seated into the outlet. The outlet does not operate while the engine is starting. If a USB powered streaming device is being used, it is suggested to use a USB port for power. See *USB Port* ➪ *159*.

If uninterrupted power supply is required while driving, disable the Auto Engine Stop/Start System by pressing the Auto Stop disable switch. See *Stop/Start System* ➪ *206*.

If equipment is connected using more than 400 watts or a system fault is detected, a protection circuit shuts off the power supply and the indicator light will flash.

Do not use a power outlet with a missing or damaged cover.

The power outlet is not designed for the following, and may not work properly if they are plugged in:

- Equipment with high initial peak wattage, such as compressor-driven refrigerators and electric power tools
- Other equipment requiring an extremely stable power supply, such as microcomputer-controlled electric blankets and touch sensor lights
- Medical equipment.

Wireless Charging

⚠ Warning

Wireless charging may affect the operation of an implanted pacemaker or other medical devices. If you have one, it is recommended to consult with your doctor before using the wireless charging system.

⚠ Warning

Always keep the wireless charging surface and the back of the phone case clear of coins, keys, rings, paper clips, cards and other objects. The system may not detect the presence of these objects, which could become very hot and cause burns. Remove the phone and allow to cool completely before handling.

Caution

Vehicle key cards, credit cards, hotel key cards, and other Near Field Communication (NFC) cards may be damaged if placed on the charging surface.

NOT FOR RESALE

If equipped and enabled, the vehicle has wireless charging in the center console in front of the storage bin and, if equipped, in the center console of the second row seating. The system operates at 127.7 kHz and can charge one Qi 1.x compatible smartphone per charger at a rate of up to 3 amp (15 W).

To begin charging, the vehicle must be on or Retained Accessory Power must be active. The wireless charging feature may not correctly indicate charging when the vehicle is in Retained Accessory Power, during a Bluetooth phone call, or when phone projection is active. See *Retained Accessory Power (RAP)* ⇨ *209*.

The operating temperature is −40 °C (−40 °F) to 85 °C (185 °F) for the charging system and 0 °C (32 °F) to 35 °C (95 °F) for the phone. An alert will display on the infotainment screen if the wireless charger or smartphone are outside of normal operating temperature. Charging will automatically resume when a normal operating temperature is reached.

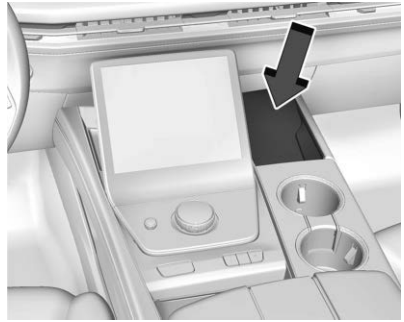

Front Console

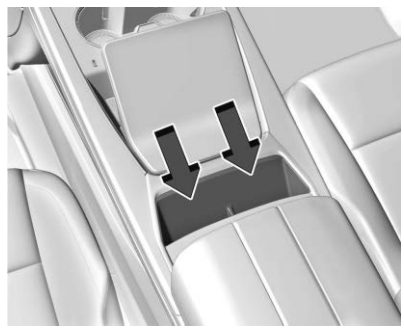

Rear Console

To charge a compatible smartphone:

1. Remove all objects from the charging pocket. The system may not charge if there are any objects between the smartphone and charger.
2. Place the smartphone face up against the rear of the charger.

   A smartphone case may prevent the charger from working, or reduce the charging performance. Be sure the smartphone case is compatible with wireless charging and the back side of the phone is clear of cards and metal objects.
3. A green ⚡ appears on the infotainment display next to or over the phone icon when the smartphone is detected.

The smartphone may become warm during charging. This is normal. In warmer temperatures, your phone may take longer to charge.

NOT FOR RESALE

Troubleshooting Wireless Charging

If a smartphone is placed on the charger and appears, remove the smartphone and any objects from the pocket. Turn the smartphone 180 degrees and wait a few seconds before placing/aligning it on the pocket again.

If a smartphone is placed on the charger and appears, the charger and/or the smartphone is overheated. Remove the smartphone and any objects from the charger in order to cool the system.

For vehicles with wireless phone projection, the smartphone may overheat during wireless charging. The smartphone may slow down, stop charging, or shut down to protect the battery. The phone may need to be removed from its case to prevent overheating. The may flash while the phone is cooling down enough for wireless charging to automatically resume. This is normal. Individual phone performance may vary.

Certain vehicle and smartphone accessories may not be compatible with the wireless charging system. See your dealer for additional information.

Warning Lights, Gauges, and Indicators

Warning lights, gauges, and indicators can alert you to an issue with your vehicle. Some warning lights display briefly to show that they are working when you start the vehicle. However, if a warning light persists while driving, or if a gauge shows there may be a problem, be sure to refer to the sections under “Warning Lights, Gauges, and Indicators.”

Paying attention to your vehicle’s warning lights, gauges, and indicators and promptly addressing any issues may help you to prevent an expensive repair or personal injury. Postponing repairs can be costly and even dangerous.

NOT FOR RESALE

Instrument Cluster

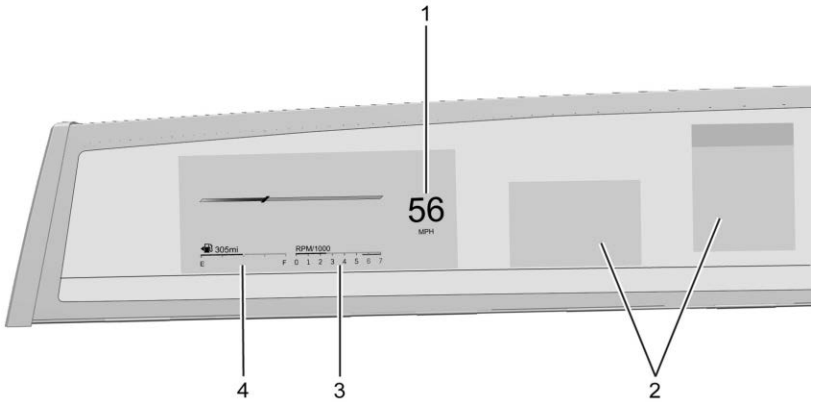

English Linear View Shown, Others and Metric Similar

1. Speedometer. See *Speedometer* ⇨ *118*.
2. Driver Information Center. See *Driver Information Center (DIC)* ⇨ *132*.
3. Tachometer. See *Tachometer* ⇨ *118*.
4. Fuel Gauge. See *Fuel Gauge* ⇨ *118*.

Reconfigurable Instrument Cluster

The following are selectable views:

Linear Gauge: Displays the tachometer and the fuel gauge near the speedometer. There are two information zones that are located to the right of the speedometer.

Radial Gauge: If equipped, displays the tachometer and the fuel gauge around the speedometer. There are two information zones that are located to the right of the speedometer.

Map: Displays a navigation map.

Driver Assistance: If equipped, displays information for Adaptive Cruise Control, Follow Distance, Lane Keep Assist, Forward Collision Alert, and Super Cruise.

Night Vision: If equipped, displays the Night Vision camera onto the instrument cluster. See *Night Vision System* ⇨ *292*.

AR Camera: If equipped, displays a camera view in front of the vehicle. This displays route guidance and upcoming turns as graphics on top of the front camera image that appears on the cluster display. If there is no active navigation, then the camera image will display without navigation overlays.

Minimalist: If equipped, displays no information zones.

NOT FOR RESALE

Use the right steering wheel control to open and scroll through the different items and displays.

To change the cluster configuration, press ∧ or ∨ on the right steering wheel control.

Select the desired option from the list. Press ✓ on the right steering wheel control to select the desired option from the list.

Selecting a different view could hide the vehicle status that is displayed in the information zones on the cluster. Once a view with information zones is selected the vehicle status that was last selected will then be displayed. See *Driver Information Center (DIC)* ➪ *132* and *Vehicle Status* ➪ *135*.

Display Settings

Turn the following options on or off using the infotainment display. Some may not be available for your vehicle. See *Settings* ➪ *174*.

Speed Sign

Shows sign information from a roadway database in the onboard navigation. The sign will show "– –" when there is no detected speed limit or the system is unavailable.

Turn-by-Turn Graphics

Provides Turn-by-Turn navigation graphics during an active route in your driver display.

Traffic Sign Recognition

Displays the detected speed limit in your driver display. See *Traffic Sign Assistant* ➪ *298*.

Speedometer

The speedometer shows the vehicle speed in either kilometers per hour (km/h) or miles per hour (mph).

Odometer

The odometer displays the distance the vehicle has been driven, in either kilometers or miles.

Trip Odometer

The trip odometer displays the distance the vehicle was driven since the trip odometer was last reset.

Access and reset the trip odometer through the Vehicle Status. See *Vehicle Status* ➪ *135*.

Tachometer

The tachometer displays the engine speed in revolutions per minute (rpm) when the engine is on.

During Auto Stop mode, the tachometer may vary by several hundred rpm when the engine is shutting off and restarting.

Fuel Gauge

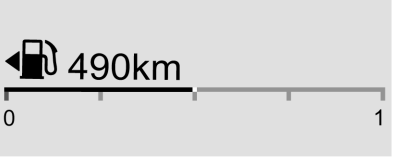

Metric Linear View Shown, Others Similar

NOT FOR RESALE

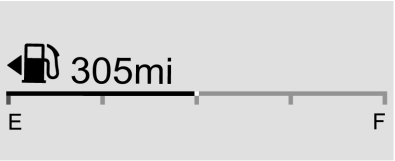

English Linear View Shown, Others Similar

When the ignition is on, the fuel gauge displays the remaining fuel in the tank.

There is an arrow near the fuel gauge pointing to the side of the vehicle the fuel door is on.

When the gas tank nears empty, the low fuel light indicates you should refuel the vehicle soon.

The fuel gauge may exhibit the following normal conditions, none of which indicate a problem with the gauge:

- Show an approximate measurement. For example, the gauge may show half a tank, but it could actually take a little more or less than half the tank's capacity to fill the tank.
- Move a little while driving on a hill, turning a corner, speeding up, or braking.
- Take time to stabilize after the ignition is turned on and return to empty when the ignition is turned off.

Fuel Range

The estimated fuel range displays near the fuel gauge. The fuel range shows the approximate distance the vehicle can be driven without refueling. This estimate uses the vehicle's average fuel economy from recent driving history and the amount of fuel remaining in the tank.

When the estimated fuel range is low, the range shows LOW and a message may also display in the Driver Information Center.

Seat Belt Reminders

Driver Seat Belt Reminder Light

There is a driver seat belt reminder light on the instrument cluster.

When the vehicle is started, or if the driver remains or becomes unbuckled while the vehicle is moving, this light flashes and an audible alert sounds to alert the driver to fasten their seat belt. The light may then display solid until the driver seat belt is buckled. This cycle may continue several times or continuously until the driver seat belt is buckled. If the driver seat belt is buckled, the light will not display and audible alert will not sound.

Front Passenger Seat Belt Reminder Light

This vehicle may have a front passenger seat belt reminder light near the passenger airbag status indicator. See *Passenger Sensing System* ⇨ *76*.

When the vehicle is started, or if the front passenger remains or becomes unbuckled while the vehicle is moving, this light flashes and an audible alert may sound to alert the front passenger to fasten their seat belt. The light may then display solid until the front passenger seat belt is buckled. This cycle may continue several times or continuously until the front passenger seat belt is buckled. If

NOT FOR RESALE

the front passenger seat belt is buckled, the light will not display and the audible alert will not sound.

Alerts may occur if an object, such as a briefcase, handbag, grocery bag, laptop, or other electronic device, is on the front passenger seat. To turn off the reminder light and/or audible alert, remove the object from the seat or buckle the seat belt.

Second and Third Row Passenger Seat Belt Reminder Light

This vehicle may have second and third row passenger seat belt reminder lights.

When the vehicle is started and not moving, and if a rear passenger has not buckled their seat belt, the light will display solid. If a rear passenger remains or becomes unbuckled while the vehicle is moving, this light may flash and an audible alert may sound to alert the driver that a rear passenger needs to fasten their seat belt.

An ✕ indicates the seat belt is not buckled. A ✓ indicates the seat belt is buckled.

For information on the front seat belt reminder lights, see "Driver Seat Belt Reminder Light" and "Front Passenger Seat Belt Reminder Light" listed previously.

Alerts may occur if an object, such as a briefcase, handbag, grocery bag, laptop, or other electronic device, is on the rear passenger seats. To turn off the reminder light and/or audible alert, remove the object from the seat or buckle the seat belt.

Airbag Readiness Light

⚠ Warning

If the airbag readiness light stays on after the vehicle is started or comes on while driving, it means the airbag system might not be working properly. The airbags in the vehicle might not inflate in a crash, or they could even inflate without a crash. To help avoid injury, have the vehicle serviced right away.

This light shows if there is an electrical problem with the airbag system. It is located on the center stack, below the infotainment screen. The system check includes the airbag sensor(s), the passenger sensing system, the pretensioners, the airbag modules, the wiring, and the crash sensing and diagnostic module. For more information on the airbag system, see *Airbag System* ⇨ *71*.

The airbag readiness light comes on for several seconds when the vehicle is started. If the light does not come on then, have it fixed immediately.

If there is a problem with the airbag system, a Driver Information Center (DIC) message may also come on.

NOT FOR RESALE

Passenger Airbag Status Indicator

Warning

If the airbag readiness light ever comes on and stays on, it means that something may be wrong with the airbag system. To help avoid injury to yourself or others, have the vehicle serviced right away. See *Airbag Readiness Light* ⇨ *120* for more information, including important safety information.

The vehicle has a passenger sensing system. See *Passenger Sensing System* ⇨ *76* for important safety information. The overhead console has a passenger airbag status indicator.

The passenger airbag status indicator may include text and/or symbols to indicate the passenger frontal airbag is either On or Off.

When the vehicle is started, the passenger airbag status indicator will light both the On and Off indicators for several seconds as a system check.

Then, after several more seconds, the passenger airbag status indicator for either On or Off will be lit to let you know the status of the front outboard passenger frontal airbag.

If the status indicator for On is lit on the passenger airbag status indicator, it means that the front outboard passenger frontal airbag is allowed to inflate.

If the status indicator for Off is lit on the passenger airbag status indicator, it means that the passenger sensing system has turned off the front outboard passenger frontal airbag.

If, after several seconds, both status indicator lights remain on, or if there are no lights at all, or if the airbag readiness light is on, there may be a problem with the lights or the passenger sensing system. See your dealer for service right away.

Charging System Light

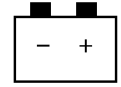

This light displays briefly when you start your vehicle. This is a normal test your vehicle runs on start up.

If the light stays on or displays while driving, there could be a problem with the electrical charging system. Have it checked by your dealer. Driving while this light is on could drain the 12-volt battery.

If you must drive a short distance with the light on, turn off all accessories, such as the radio, to save battery power. Find a safe place to stop the vehicle.

NOT FOR RESALE

Malfunction Indicator Light (Check Engine Light)

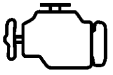

Caution

If the vehicle is driven continually with this light on, the emission control system may not work as well, the fuel economy may be lower, and the vehicle may not run smoothly. This could lead to costly repairs that might not be covered by the vehicle warranty.

Caution

Modifications to the engine, transmission, exhaust, intake, or fuel system, or the use of replacement tires that do not meet the original tire specifications, can

(Continued)

Caution (Continued)

cause this light to come on. This could lead to costly repairs not covered by the vehicle warranty. This could also affect the vehicle's ability to pass an Emissions Inspection/Maintenance test. See *Accessories and Modifications* ➪ *309*.

This light displays briefly when you start your vehicle. This is a normal test your vehicle runs on start up. If it does not display, see your dealer for service.

The light is part of emission control on-board diagnostic system of the vehicle. If this light stays on or displays while driving, a malfunction is present, and the vehicle may require service. See *Ignition Positions* ➪ *204*.

The system often shows malfunctions before any problem is noticeable. Being aware of the light and seeking service promptly when it displays may prevent damage.

If the light is flashing: A malfunction has been detected that could damage the emission control system and increase vehicle emissions. Diagnosis and service may be required. See your dealer.

To help prevent damage, reduce vehicle speed, and avoid hard accelerations and uphill grades. If towing a trailer, reduce the amount of cargo being hauled as soon as possible.

If the light continues to flash, find a safe place to park. Turn the vehicle off and wait at least 10 seconds before restarting the engine. If the light is still flashing, follow the previous guidelines under "If the light is flashing," and see your dealer for service as soon as possible.

If the light is on steady: A malfunction has been detected. Diagnosis and service may be required. See your dealer.

Check the following:

- If fuel has been added to the vehicle using the capless funnel adapter, make sure that it has been removed. See "Filling the Tank with a Portable Gas Can" under *Filling the Tank* ➪ *304*. The diagnostic system can detect if the adapter has been left installed in the vehicle, allowing fuel to evaporate into the atmosphere. A few driving trips with the adapter removed may turn off the light.
- Poor fuel quality can cause inefficient engine operation and poor drivability, which may go away once the engine is

NOT FOR RESALE

warmed up. If this occurs, change the fuel brand. It may require at least one full tank of the proper fuel to turn the light off. See *Recommended Fuel* ➪ *304*.

If the light remains on, see your dealer.

Emissions Inspection and Maintenance Programs

If the vehicle requires an Emissions Inspection/Maintenance test, the test equipment can be used to connect to the vehicle's Data Link Connector.

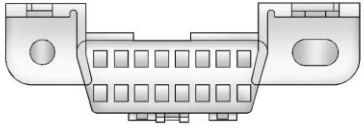

The Data Link Connector is under the instrument panel to the left of the steering wheel. Connecting devices that are not used to perform an Emissions Inspection/Maintenance test or to service the vehicle may affect vehicle operation. See *Add-On Electrical Equipment* ➪ *307*. See your dealer if assistance is needed.

The vehicle may not pass inspection if:

- The Malfunction Indicator Light displays when the engine is running
- The light does not display when the ignition is on while the engine is off.
- Critical emission control systems have not been completely diagnosed. If this happens, the vehicle would not be ready for inspection and might require several days of routine driving before the system is ready for inspection. This can happen if the 12-volt battery has recently been replaced or run down, or if the vehicle has been recently serviced.

See your dealer if the vehicle will not pass or cannot be made ready for the test.

Brake System Warning Light

BRAKE

Metric **English**

⚠ Warning

The brake system might not be working properly if the brake system warning light is on. Driving with the brake system warning light on can lead to a crash. If the light is still on after the vehicle has been pulled off the road and carefully stopped, have the vehicle towed for service.

This light displays briefly when you start your vehicle. This is a normal test your vehicle runs on startup. If it does not display, see your dealer for service.

If the light stays on, have the brake system inspected immediately. This light may display if the brake fluid is low. See *Brake Fluid* ➪ *326*.

If the light displays while driving, pull off the road and stop carefully. If equipped with electric brake boost, vehicle speed may be limited when the brake system warning light displays. The brake pedal might be harder to push, or the brake pedal may go closer to the floor. It could take longer to stop. If the light is still on, have the vehicle towed for service. See *Transporting a Disabled Vehicle* ➪ *380*.

NOT FOR RESALE

Electric Parking Brake Light

PARK

Metric **English**

This light displays when the Electric Parking Brake is applied. If the light flashes after the Electric Parking Brake is released, or while driving, there is a problem with the Electric Parking Brake system. A message may also display in the Driver Information Center.

If the light does not display, or remains flashing, see your dealer.

Service Electric Parking Brake Light

This light displays briefly when you start your vehicle. This is a normal test your vehicle runs on start up. If it does not display, see your dealer for service.

If this light stays on or displays while driving, there is a problem with the electric parking brake. Take the vehicle to a dealer as soon as possible. In addition to the parking brake, other safety functions that use the electric parking brake may also be affected. A message may also display in the Driver Information Center.

See *Electric Parking Brake* ⇨ *220*.

Antilock Brake System (ABS) Warning Light

This light displays briefly when you start your vehicle. This is a normal test your vehicle runs on start up. If it does not display, see your dealer for service.

When the Antilock Brake System (ABS) detects a problem, the warning light displays and stays on, and you may hear an audible alert. Your vehicle brakes will still function, but your Antilock Brake System (ABS) is not functioning as expected. See your dealer for service.

If this warning light and the brake system warning light are displayed, your Antilock Brake System (ABS) and your regular brakes are not functioning as expected. See your dealer for service.

See *Brake System Warning Light* ⇨ *123*.

Four-Wheel-Drive Light

Auto Mode Shown, Other Modes Similar

If equipped, the corresponding light displays when an 2WD mode, 4HI mode, AUTO mode (all transfer cases); 4LOW mode and N mode (two-speed transfer case only) is selected.

NOT FOR RESALE

The light will flash when a shift is in progress. Once the shift is complete the light will be steady.

If the light displays amber, there may be a malfunction with the four-wheel-drive system. See your dealer.

See *Four-Wheel Drive* ➪ *215*.

Automatic Vehicle Hold (AVH) Light

This light displays when Automatic Vehicle Hold is enabled and turns green when Automatic Vehicle Hold is actively holding the vehicle. See *Automatic Vehicle Hold (AVH)* ➪ *222*.

Lane Keep Assist (LKA) Light

If equipped, the Lane Keep Assist Light may display the following colors:

- Grey: May display when Lane Keep Assist is off.
- White: Displays when Lane Keep Assist is turned on but not controlling the vehicle. It may display when you change lanes intentionally.
- Green: Displays when Lane Keep Assist is turned on and ready to assist. Lane Keep Assist will gently turn the steering wheel if the vehicle approaches a detected lane marking.
- Amber: Displays when Lane Keep Assist is active. The light flashes amber as a Lane Departure Warning alert indicating that a lane marking has been unintentionally crossed. If the system detects you are steering intentionally (to pass or change lanes), the Lane Departure Warning alert may not display. The amber light also displays when the Blind Zone Steering Assist detects a potential crash with a moving vehicle in the lane you are entering. See *Blind Zone Steering Assist (BZSA)* ➪ *297*. If Lane Keep Assist is malfunctioning or is turned off by the user, the amber light may display and stay on.

Lane Keep Assist will not assist or alert if the turn signal is active in the direction of lane departure, or if Lane Keep Assist detects that you are accelerating, braking, or actively steering. See *Lane Keep Assist (LKA)* ➪ *301*.

Hands-On Steering Assist Light (Lane Centering Assistance)

If equipped, this light displays the Hands-On Steering Assistance status.

NOT FOR RESALE

If equipped, this light displays when you need to take immediate action by firmly steering the vehicle.

See *Hands-On Steering Assist (Lane Centering Assistance)* ⇨ *242*.

Automatic Emergency Braking (AEB) Disabled Light

This indicator displays when you turn off Automatic Emergency Braking or Front Pedestrian Braking.

This indicator also displays if Automatic Emergency Braking or Front Pedestrian Braking are unavailable due to malfunction, weather conditions, or a dirty windshield.

See *Automatic Emergency Braking (AEB)* ⇨ *286*.

See *Front Pedestrian Braking (FPB) System* ⇨ *290*.

Vehicle Ahead Indicator

If equipped, this indicator displays green when a vehicle is detected ahead, amber if you are following a vehicle too closely, and grey if no vehicle is detected and the feature is in standby.

See *Forward Collision Alert (FCA) System* ⇨ *284*.

Pedestrian Ahead Indicator

If equipped, this indicator displays amber when a pedestrian is detected in front of the vehicle.

See *Front Pedestrian Braking (FPB) System* ⇨ *290*.

Follow Distance Indicator Light

If equipped, this indicator displays information on the follow distance and, if equipped, Adaptive Cruise Control gap setting:

- White: Display the current gap setting. Three white lines display for far, two white lines display for medium, and one white line displays for near.
- Gray: Displays for inactive lines on the current setting.
- Green: Displays the current follow distance Adaptive Cruise Control is maintaining ahead of the vehicle.

NOT FOR RESALE

- Blue: Displays when you take control of the vehicle and override the follow distance Adaptive Cruise Control is maintaining.

For more information, see *Forward Collision Alert (FCA) System* ⇨ *284*.

Traction Off Light

This light displays briefly when you start your vehicle. This is a normal test your vehicle runs on start up. If it does not display, see your dealer for service.

The traction off light displays when the Traction Control System has been turned off. When StabiliTrak/Electronic Stability Control is turned off, the Traction Control System is also turned off. To turn the Traction Control System and StabiliTrak/Electronic Stability Control off and on, see *Traction Control/Electronic Stability Control* ⇨ *223*.

If the Traction Control System is off, wheel slip does not limit acceleration unless necessary to help protect the driveline from damage. Adjust your driving accordingly.

Traction Control System (TCS)/ Electronic Stability Control Light

This light displays briefly when you start your vehicle. This is a normal test your vehicle runs on startup. If it does not display, see your dealer for service.

The light flashes when the Traction Control System and/or the StabiliTrak/Electronic Stability Control System is actively working.

If the light is on and not flashing, the Traction Control System and StabiliTrak/Electronic Stability Control System may not be fully operational or able to assist maintaining control. Adjust your driving accordingly. If the condition persists, see your dealer as soon as possible. A message may display in the Driver Information Center.

See *Traction Control/Electronic Stability Control* ⇨ *223*.

Trailer Sway Control Light

If equipped, this light will flash when Trailer Sway Control is active. See *General Towing Information* ⇨ *306*.

Electronic Stability Control (ESC) Off Light

NOT FOR RESALE

This light displays briefly when you start your vehicle. This is a normal test your vehicle runs on start up. If it does not display, see your dealer for service.

This light displays when the StabiliTrak/Electronic Stability Control system is turned off. When StabiliTrak/Electronic Stability Control is off, the Traction Control System is also off. To turn StabiliTrak/Electronic Stability Control off and on, see *Traction Control/Electronic Stability Control* ⇨ *223*.

If StabiliTrak/Electronic Stability Control and the Traction Control System are off, the systems do not assist in controlling the vehicle. Adjust your driving accordingly.

Engine Coolant Temperature Warning Light

Caution

The engine coolant temperature warning light indicates that the vehicle has overheated. Driving with this light on can damage the engine and it may not be covered by the vehicle warranty. See *Engine Overheating* ⇨ *322*.

This light briefly displays during vehicle startup as a normal test. If it does not display on startup, or if it stays lit, see your dealer for service.

If the light displays while driving, pull over and turn off the engine as soon as possible.

Driver Mode Control Light

This light displays when you select Sport mode.

This light displays when you select Snow mode.

This light displays when you select Terrain mode.

This light displays when you select Off-Road mode.

NOT FOR RESALE

This light displays when you select the Tow/ Haul mode.

This light displays when you select V-Mode.

This light displays when you select My Mode.

See *Driver Mode Control* ⇨ *224*.

Air Suspension Light

This light displays when the vehicle is raised to increased height.

It flashes green to indicate that the vehicle is raising the ride height.

This light displays when the vehicle is lowered to lowered height.

This light flashes green to indicate that the vehicle is lowering the ride height.

This light displays when the vehicle is lowered for easy entry and exit from the vehicle.

This light displays when the vehicle is in Service mode or Alignment mode.

See *Air Suspension* ⇨ *228*.

Tire Pressure Light

NOT FOR RESALE

If equipped with the Tire Pressure Monitor System, this light displays briefly when you start your vehicle. This is a normal test your vehicle runs on start up.

The light displays to indicate information about tire pressures and the Tire Pressure Monitor System.

If the Light Stays On

This indicates that one or more of the tires are significantly underinflated.

A Driver Information Center tire pressure message may also display. Stop as soon as possible and inflate the tires to the pressure value shown on the Tire and Loading Information label. See *Tire Pressure* ➪ *350*.

If the Light Flashes and Then Remains On

If the light flashes for about a minute and then stays on, there may be a problem with the Tire Pressure Monitor System. If the problem is not corrected, the light will display every time the vehicle is started. See *Tire Pressure Monitor Operation* ➪ *354*.

Engine Oil Pressure Light

Caution

Driving the vehicle with low engine oil pressure can damage the engine and the repairs would not be covered by the vehicle warranty.

If the engine oil pressure light comes on while driving:

1. Stop in a safe location and turn off the engine.
2. Check the oil level. See *Engine Oil* ➪ *315*.
3. Add oil if the oil level is below the normal operating range.
4. Restart the vehicle. If the engine oil pressure light stays on for more than 10 seconds, turn the vehicle back off. Do not restart the vehicle. See your dealer for service.

This light should display briefly when the engine starts. When the engine is off and the vehicle is on, the light should remain illuminated. If it does not display under either condition, contact your dealer.

If the light displays and stays on when the engine is running, it may not have adequate oil pressure. The oil level may be low or there may be some other oil system problem. Turn the engine off when it is safe to do so and contact your dealer.

Low Fuel Warning Light

NOT FOR RESALE

This light displays briefly when you start your vehicle. This is a normal test your vehicle runs on start up.

The light displays when the fuel tank is running low and it turns off when fuel is added. If it does not, see your dealer for service.

If a message displays on the Driver Information Center (DIC) indicating HEAVY FUEL USE, refuel as soon as possible.

Auto Stop Indicator

If equipped, this light displays when Auto Stop is enabled.

See *Stop/Start System* ➪ *206*.

Security Light

This light displays briefly when you start your vehicle. This is a normal test your vehicle runs on start up. If it does not display, see your dealer for service.

If the light stays on and the vehicle does not start, there could be a problem with the theft-deterrent system. See *Immobilizer Operation* ➪ *31*.

High-Beam On Light

This light displays when the high-beam headlights are in use. See *High-Beam Systems* ➪ *144*.

Automatic High-Beam Light

If equipped, this light displays when the IntelliBeam system is enabled. See *High-Beam Systems* ➪ *144*.

Service Headlight System Indicator

If equipped, this light displays when there is a problem with the Headlight system.

NOT FOR RESALE

Lights On Reminder

This light displays when the exterior lights are in use. The light will not display when only the Daytime Running Lights are active. See *Headlight Controls* ➪ *143*.

Cruise Control Light

If equipped, this light displays white when cruise control is on and ready, and turns green when set and active.

The light turns off when cruise control is turned off. See *Adaptive Cruise Control (Advanced)* ➪ *231*.

Adaptive Cruise Control Light

This light displays the Adaptive Cruise Control status.

See *Adaptive Cruise Control (Advanced)* ➪ *231*.

Curve Speed Control Light

If equipped, this light displays green when Adaptive Cruise Control is actively controlling the vehicle speed and detects a sharp curve on the road ahead.

Adaptive Cruise Control automatically slows the vehicle down while navigating the curve, and may increase speed out of the curve without exceeding the set speed.

Super Cruise Light

If equipped, this light displays the Super Cruise status. See *Super Cruise* ➪ *255*.

Door Ajar Light

This light displays when a door is open or not securely latched. Before driving, check that all doors are properly closed.

Information Displays

Driver Information Center (DIC)

Driver information is displayed in the instrument cluster. It shows the status of many vehicle systems.

NOT FOR RESALE

Information is broken down into two main zones:

Left Zone: Displays on the instrument cluster to the right of the speedometer.

Right Zone: Displays on the instrument cluster to the right of the left zone.

∧ or ∨ : Use to scroll to the previous or next selection.

✓ : Press to open a menu or select a menu item. Press and hold to reset certain displays.

Information Display Options

Select which info display to view by selecting Add to Driver Display in the Vehicle Status on the infotainment display. See *Vehicle Status* ⇨ *135*.

Information Displays

The following is the list of all information displays and their locations. Some information displays may not be available for your vehicle.

Left Zone

Auto Lane Change: Displays the status of a driver-requested lane change when Super Cruise is active. See *Super Cruise* ⇨ *255*.

Audio Now Playing: Displays the actively playing audio.

Navigation: Displays a variety of navigation information.

Phone: Displays a variety of call information.

Performance Timer: If equipped, displays the current and best times achieved during acceleration.

To reset the best time or set a custom timer, highlight the selection on the performance timer menu and press ✓.

Off: Displays no information in the cluster information display areas.

Right Zone

Trip Information: The Trip 1 or 2 display shows the current distance traveled, in either kilometers (km) or miles (mi), since the trip odometer was last reset. To reset the trip, touch and hold the touchscreen display when trip odometer is displayed on the vehicle status screen.

The Average Fuel Economy display shows the approximate average liters per 100 kilometers (L/100 km), kilometers per liter (km/L), or miles per gallon (mpg). This number is calculated based on the number of L/100 km (mpg) or km/L recorded since the last time this menu item was reset. This number reflects only the approximate average fuel economy that the vehicle has right now, and will change as driving conditions change. The Average Fuel Economy can be reset along with the trip odometer by touching and holding the touchscreen display when trip odometer is displayed on the vehicle status screen.

NOT FOR RESALE

Current Trip: Displays distance driven, fuel economy, and time elapsed since vehicle startup. It resets when you turn your vehicle off.

Time/Date: Displays current date, time, and temperature information.

Battery Voltage: Displays the current battery voltage.

Oil Life: Displays an estimate of the remaining oil life. If REMAINING OIL LIFE 99% is displayed, that means 99% of the current oil life remains. Follow any messages that display based on the oil life and the state of the system.

See *Engine Oil* ➪ *315*. In addition to the engine oil life system monitoring the oil life, additional maintenance is recommended. See *Maintenance Schedule* ➪ *395*.

The Oil Life must be reset after each oil change. It will not reset itself. Do not reset the Oil Life display at any time other than when the oil has just been changed. It cannot be reset accurately until the next oil change. To reset, see *Engine Oil Life System* ➪ *317*.

Fuel Economy: Displays information about current and average fuel economy.

Tire Pressure: Displays the approximate pressures of each tire. Tire pressure displays in either kilopascal (kPa) or in pounds per square inch (psi). If the pressure is low, the value for that tire is shown in amber. See *Tire Pressure Monitor System* ➪ *353* and *Tire Pressure Monitor Operation* ➪ *354*.

Trailer Brake: On vehicles with the Integrated Trailer Brake Control (ITBC) system, the trailer brake display appears in the DIC.

TRAILER GAIN shows the trailer gain setting. This setting can be adjusted from 0.0 to 10.0 with either a trailer connected or disconnected.

TRAILER OUTPUT shows the power output to the trailer any time a trailer with electric brakes is connected. Output is displayed as a bar graph. Dotted lines may appear in the OUTPUT display if a trailer is not connected.

Trailer Tire Pressure: If equipped, shows the approximate pressures of all trailer tires. Tire pressure is displayed in either kilopascal (kPa) or in pounds per square inch (psi). If the pressure is low, the value for that tire is shown in amber. See *General Towing Information* ➪ *306*.

Trailer Tire Temperature is located below the tire pressure. Trailer Tire Temperature shows each trailer tire temperature in either degrees Celsius (°C) or degrees Fahrenheit (°F).

Brake Pad Life: Displays an estimate of the remaining life of the front and back brake pads. Messages display based on brake pad wear and the state of the system. Reset the Brake Pad Life display after replacing the brake pads. See *Brake Pad Life System* ➪ *326*.

Engine Air Filter Life: Displays an estimate of the remaining engine air filter life and the state of the system. Engine Air Filter Life 95% means 95% of the current air filter life remains. Follow any messages that display based on engine air filter life and the state of the system. The Air Filter Life display must be reset after the engine air filter replacement.

See *Engine Air Filter Life System* ➪ *318*.

Temperatures and Pressure: Displays Oil Temperature, Oil Pressure, Coolant Temperature, and Transmission Fluid Temperature.

NOT FOR RESALE

G-Force: If equipped, displays inertial forces being exerted on the vehicle in the lateral (side to side) and vertical (acceleration and braking) direction as numerical values and graphical depictions.

Engine Boost: If equipped, displays engine manifold pressure relative to ambient air pressure. It displays boost pressure generated by the supercharging or turbocharging system.

Launch Coach: If equipped, displays instructional messages and dynamic gauges reflecting brake and throttle pedal positions. See *Driver Mode Control* ⇨ *224*.

Off: Displays no information in the cluster information display areas.

Vehicle Status

The status of various vehicle systems can be viewed on the infotainment screen. To access the menu, select the Vehicle Status icon on the infotainment home screen.

Follow any messages or alerts that display. Some options may be unavailable while driving.

Select Add to Driver Display to send the desired content to the Driver Information Center. Select Remove from Display to remove the selected content from the Driver Information Center. See *Driver Information Center (DIC)* ⇨ *132*.

Options

The following is the list of vehicle status content and location. Not all content and options may be available for your vehicle.

Overview

Displays an interactive image of your vehicle's performance and health information.

Maintenance

Tire Pressure: Displays the approximate pressures of each tire. Tire pressure displays in either kilopascal (kPa) or in pounds per square inch (psi). If the pressure is low, the value for that tire is shown in amber. See *Tire Pressure Monitor System* ⇨ *353* and *Tire Pressure Monitor Operation* ⇨ *354*.

If equipped, Tire Temperature is located below the tire pressure graphic. Tire Temperature displays overall temperature as either Cold, Cool, Normal, Warm, or Hot. Normal is typical for normal driving while Warm is typical for spirited driving. Unknown displays when tire temperature information is unavailable.

The following options may be chosen: Relearn Sensors and Add to Driver Display.

Brake Pad Life: Displays an estimate of the remaining life of the front and back brake pads. Messages display based on brake pad wear and the state of the system.

Choose from the following options: Turn Off/On, Reset Front Brake Pads, Reset Back Brake Pads, and Add to Driver Display. Reset the Brake Pad Life after replacing the brake pads. See *Brake Pad Life System* ⇨ *326*.

Oil Life: Displays an estimate of the remaining oil life. If REMAINING OIL LIFE 99% is displayed, that means 99% of the current oil life remains. Follow any messages that display based on the oil life and the state of the system.

See *Engine Oil* ⇨ *315*. In addition to the engine oil life system monitoring the oil life, additional maintenance is recommended. See *Maintenance Schedule* ⇨ *395*.

Choose from the following options: Reset and Add to Driver Display.

NOT FOR RESALE

The Oil Life must be reset after each oil change. It will not reset itself. Do not reset the Oil Life display at any time other than when the oil has just been changed. It cannot be reset accurately until the next oil change. To reset, see *Engine Oil Life System* ⇨ *317*.

Engine Air Filter Life: Displays an estimate of the remaining engine air filter life and the state of the system. Engine Air Filter Life 95% means 95% of the current air filter life remains. Follow any messages that display based on engine air filter life and the state of the system. The Air Filter Life display must be reset after the engine air filter replacement. See *Engine Air Filter Life System* ⇨ *318*.

Choose from the following options: Turn Off/On, Reset, and Add to Driver Display.

Gauges

Temperatures and Pressure: Displays Oil Temperature, Oil Pressure, Coolant Temperature, and Transmission Fluid Temperature.

Oil Pressure is shown in either kPa (kilopascals) or psi (pounds per square inch). Coolant Temperature, Transmission Fluid Temperature, and Oil Temperature are shown in either degrees Celsius (°C) or degrees Fahrenheit (°F).

Select Add to Driver Display if desired.

G-Force: If equipped, displays inertial forces being exerted on the vehicle in the lateral (side to side) and vertical (acceleration and braking) direction as numerical values and graphical depictions.

Select Add to Driver Display if desired.

Engine Boost: If equipped, displays engine manifold pressure relative to ambient air pressure. It displays boost pressure generated by the supercharging or turbocharging system.

Select Add to Driver Display if desired.

Battery Voltage: Displays the current battery voltage.

Select Add to Driver Display if desired.

Trip

Trip Information: Trip 1 or 2 displays the current distance traveled, in either kilometers (km) or miles (mi), since the trip odometer was last reset.

Average Fuel Economy displays the approximate average liters per 100 kilometers (L/100 km) or miles per gallon (mpg). This number is calculated based on the number of L/100 km (mpg) recorded since the last time this menu item was reset. This number reflects only the current, approximate average fuel economy and changes as driving conditions change.

To reset these values, touch reset on the touchscreen display when the Trip Information dialog is selected.

Choose from the following options: Reset Trip 1, Reset Trip 2, and Add to Driver Display.

Fuel Economy: Displays average fuel economy, the best fuel economy over the selected distance, and a bar graph showing instantaneous fuel economy. Values are displayed in liters per 100 kilometers (L/100 km) or miles per gallon (mpg). This number reflects only the approximate fuel economy and changes frequently as driving conditions change. Only the best score can be reset.

If the vehicle is equipped with an Active Fuel Management indicator, the engine operating mode will be shown in this display.

NOT FOR RESALE

The following options may be chosen: Change Distance, Reset Best Score, and Add to Driver Display. The distance for average fuel economy and the best fuel economy can be changed to: 40 km (25 mi), 80 km (50 mi), and 725 km (300 mi).

Current Trip: Displays the current distance traveled, in either kilometers (km) or miles (mi).

It also includes the Average Fuel Economy. Average Fuel Economy shows the approximate average liters per 100 kilometers (L/100 km), kilometers per liter (km/L), or miles per gallon (mpg). This number only reflects the approximate Average Fuel Economy that the vehicle has at that moment, and changes as driving conditions change.

The timer shows the time in the current drive cycle.

All values in the Drive Summary are automatically reset each time the vehicle is started.

Select Add to Driver Display if desired.

Passenger Options

The following is the list of vehicle status content that may display when you select the Vehicle Status icon on the passenger infotainment screen.

Speedometer: Displays the vehicle speed. See *Speedometer* ⇨ *118*.

Fuel Range: Displays estimated fuel range. See "Fuel Range" under *Fuel Gauge* ⇨ *118*.

Trip Information : Trip 1 or 2 displays the current distance traveled, in either kilometers (km) or miles (mi), since the trip odometer was last reset.

Head-Up Display (HUD)

⚠ Warning

If the HUD image is too bright or too high in your field of view, it may take you more time to see things you need to see when it is dark outside. Be sure to keep the HUD image dim and placed low in your field of view.

Caution

If you try to use the HUD image as a parking aid, you may misjudge the distance and damage your vehicle. Do not use the HUD image as a parking aid.

Caution

The Head-Up Display projects information using polarized light. Wearing polarized sunglasses can block this light, making the image invisible, dim, or difficult to read. Do not use polarized sunglasses when using the Head-Up Display feature.

If equipped, the Head-Up Display (HUD) projects vehicle information onto the windshield through a lens on top of the instrument panel.

You can change the language and the units of measurement to English or metric through the infotainment screen. See "System" under *Settings* ⇨ *174*.

NOT FOR RESALE

If equipped, the Head-Up Display (HUD) may display the following vehicle information, messages, or alerts:

- Speed
- Incoming Phone Calls
- Navigation
- Driver Assistance Indicators
- Vehicle Messages

Controls

The Head-Up Display (HUD) controls are located on the front center console display. Select the quick controls arrows at the top of the front center console display to turn the Head-Up Display (HUD) on or off. Select Controls > HUD adjustments at the bottom of the front center console display to adjust the brightness, height, and rotation.

Image

To adjust the Head-Up Display (HUD) image:

1. Adjust the driver seat to your optimal driving position.
2. Start the vehicle.
3. On the front center console display, select Controls > HUD Adjustments.
4. Press the height and rotation icons or tap the bars to adjust the image to a position level with the ground that is fully visible and clear.
5. The image will automatically dim and brighten to compensate for outside lighting. Use the brightness icons to adjust as needed.

The image can temporarily light up depending on the angle and position of sunlight on the image. This is normal.

The Head-Up Display (HUD) settings are stored and recalled with memory seats, if equipped. See *Memory Seats* ➪ *47*.

Options

Speed Limit Sign:

- To turn the posted speed sign, if equipped, in the Head-Up Display (HUD) on or off, on the infotainment home screen, select *Settings* ➪ *174* > Display > Driver Display.
- To turn Traffic Sign Recognition, if equipped, in the Head-Up Display (HUD) on or off, select *Settings* ➪ *174* > Vehicle > Speed Assist.

Turn-by-Turn Navigation:

- To turn the Turn-by-Turn Navigation in the Head-Up Display (HUD) on or off, on the infotainment home screen, select *Settings* ➪ *174* > Display > Head-Up Display.

Content

If equipped, the following content displays in the Head-Up Display (HUD). Critical alerts may appear in the display, even when it is turned off.

Speed: Displays the speedometer reading in English or metric units, posted speed limit, and some indicators. See *Symbols* ➪ *3*. Incoming phone call information, if connected via Bluetooth, and some alerts will temporarily display in the Head-Up Display (HUD).

Navigation: If equipped, displays the speed content and Turn-by-Turn Navigation information during an active route.

Troubleshooting

To ensure optimal visibility of the Head-Up Display (HUD) image, make sure that:

- The windshield is clean. See *Interior Care* ➪ *389*. The windshield is part of the Head-Up Display (HUD) system. See *Windshield Replacement* ➪ *330*.

NOT FOR RESALE

- The lens is clean and clear of any obstructions. See *Interior Care* ➪ *389*.
- The brightness setting is appropriately adjusted.
- The Head-Up Display (HUD) is adjusted to the proper height and rotation.

If you continue to experience problems, contact your dealer.

Vehicle Messages

Messages displayed on the Driver Information Center indicate the vehicle status or needed action to correct a condition. Multiple messages may appear together.

Vehicle status notifications are also sent to the infotainment display. Touch 🔔 on the infotainment home screen to display vehicle messages. A red dot on the notification icon indicates an active issue. Depending on the message, you can schedule service or find the nearest dealer.

Press ✓ to acknowledge and clear the messages that do not require immediate action. You cannot clear messages that require immediate action until that action is performed.

Address and follow all message instructions promptly; clearing a message does not correct the issue.

If a SERVICE message appears, see your dealer.

The system may display messages concerning:

- Service Messages
- Fluid Levels
- Vehicle Security
- Brakes
- Ride Control Systems
- Advanced Driver Assistance Systems
- Cruise Control
- Lighting and Bulb Replacement
- Wiper/Washer Systems
- Doors and Windows
- Seat Belts
- Airbag Systems
- Engine and Transmission
- Tire Pressure
- Battery
- Steering

Engine Power Messages

REDUCED ACCELERATION DRIVE WITH CARE

This message indicates reduced propulsion power, which will affect maximum acceleration. Drive with caution. Try restarting after the ignition has been off for two minutes. If acceleration decreases significantly, propulsion may be disabled while the vehicle is in motion.

If this message stays on or appears repeatedly, take the vehicle to your dealer for service as soon as possible.

Vehicle Speed Messages

SPEED LIMITED TO XXX KM/H (MPH)

This message indicates that the vehicle has limited its speed to protect vehicle systems, such as lubrication, thermal, brakes, suspension, tires, or Teen Driver, if equipped.

NOT FOR RESALE

Universal Remote System

Universal Remote System Programming (Garage Door Opener)

The Universal Remote System can replace up to eight remote control transmitters (remote controls), such as garage door openers, security systems, and home automation devices. These instructions address garage door openers, but will work for other devices, too.

Do not use the Universal Remote System with any garage door opener that does not have the stop and reverse feature. This includes any garage door opener model manufactured before April 1, 1982.

Keep the original hand-held transmitter for use in other vehicles and future programming and erase the system if you terminate vehicle ownership. See "Erasing Universal Remotes" later in this section.

Programming the Universal Remote System

Programming involves time-sensitive steps. You must complete these steps within the allotted time, or you will have to repeat programming.

Read these instructions completely before programming the Universal Remote System. It may help to have another person assist with the programming process.

1. If your garage door opener includes a hand-held transmitter, make sure it has a new battery for quick and accurate transmission of the radio-frequency signal.
2. Clear all people and objects away from the garage door.
3. Park your vehicle outside and directly facing the garage door opener receiver. The vehicle must remain in P (Park) for the entire duration of the programming.
4. From the Controls menu, select Universal Remotes > Add Remote.

   Depending on the vehicle, access the Controls menu from either the infotainment apps screen or the front center console.
5. If you have a hand-held transmitter, make sure to press Yes to continue to the next step.

   If your garage door opener does not include a hand-held transmitter, press either D-Mode (mostly used in North America), or UR-Mode (mostly used in Europe, Mideast, and Asia), and jump to "D-Mode and UR-Mode Based Programming" later in this section.

Hand-Held Transmitter Based Programming

   Once you press Yes for the hand-held transmitter, you should see a screen with Searching for Signal.
6. While Searching for Signal is displayed, press and hold the hand-held transmitter button about 3 to 8 cm (1 to 3 in) away from the rear-view mirror. Do not release the button until Signal Found displays.

   If Signal Found does not display after 45 seconds, press < and return to Step 4 to try again.

   Some garage door openers require a modification to Step 6. See "Radio Signals for Some Gate Operators" later in this section.

NOT FOR RESALE

7. Once Signal Found displays, press the Test button on the screen. You may need to press it several times, as some garage door openers require multiple valid signals when programming.
8. If your garage door moves, press the It Worked button to confirm programming was successful and end the process.

   If programming was not successful, you can return to Step 4 and try again or follow additional steps described in "D-Mode and UR-Mode Based Programming" later in this section. You can also consult with HomeLink by jumping to "Contact HomeLink" later in this section.

D-Mode and UR-Mode Based Programming

   If supported, you may be able to program D or UR mode garage door receiver remotes.

9. Locate the Learn or Smart button on the garage door opener receiver in the garage. The name and color may vary by manufacturer but is usually located near the antenna wire. If you have any difficulty finding the button, refer to the garage door opener manufacturer's instructions.
10. Press and release the Learn or Smart button on the garage door opener receiver, then complete the next step within 30 seconds of pressing the button. If it takes longer than 30 seconds, press the button again.
11. Return to the vehicle and press the Test button on the screen. You may need to press the Test button several times. If your garage door moves, then programming was successful. Press the It Worked button to confirm programming was successful and end the process.

    If programming was not successful, you may retry steps above by pressing the It Didn't Work button or consult with HomeLink by jumping to "Contact HomeLink" later in this section.

Contact HomeLink

For questions or programming help, visit www.homelink.com/gm or call 1–800–355–3515. International rates apply for calls placed outside the U.S., Canada, or Puerto Rico, and may differ based on landline or mobile phone.

Using Universal Remotes

After successfully programming your Universal Remote, you can change the name and location of the remote as desired by selecting next to the remote on the screen. Be sure that you are nearby your programmed garage door opener when you select Update Location.

Each successfully programmed remote creates a shortcut icon. Tap the desired shortcut icon to operate the remote. You can press and drag icons to reposition them on the screen as desired.

Erasing Universal Remotes

To erase an individual programmed Universal Remote, select next to the remote on the screen you wish to erase. Then select Delete.

To erase ALL programmed Universal Remotes, select next to any remote on the screen. Then select Delete All.

Radio Signals for Some Gate Operators

Some gate operators and radio-frequency laws require transmitter signals to time out after several seconds of transmission.

NOT FOR RESALE

This may not be long enough for the Universal Remote system to pick up the signal during programming. If programming did not work, replace Step 6 under "Programming the Universal Remote System," previously in the section, with the following:

Press and release the hand-held transmitter button every two seconds until Signal Found appears on the screen. Continue to Step 7 to complete programming.

Universal Remote System Operation (Garage Door Opener)

Using the Universal Remote System

Press the desired Universal Remote button on the infotainment apps screen or the front center console, depending on the vehicle.

Reprogramming a Single Universal Remote System Button

To reprogram any of the system buttons:

1. Select the universal remote to be reprogrammed.
2. Select "Delete."
3. Select "Add Remote." Follow the instructions in *Universal Remote System Programming (Garage Door Opener)* ⇨ *140*.

NOT FOR RESALE

Lighting

Exterior Lighting
Headlight Controls 143
High-Beam Systems 144
Headlights Off Reminder 145
Daytime Running Lights 145
Automatic Headlight System 145
Headlight Leveling Control 146
Hazard Warning Flashers 146
Turn and Lane-Change Signals 147

Interior Lighting
Instrument Panel Illumination Control 147
Dome Lights 148
Reading Lights 148

Lighting Features
Entry Lighting 148
Exit Lighting 149
Ambient Lighting 149
Battery Load Management 150
Battery Power Protection 150
Exterior Lighting Battery Saver 151

Exterior Lighting

Headlight Controls

The headlight control is along the bottom edge of the front center console display. Touch the Headlights symbol, then select any of the following options.

Off : Turns off the exterior lights and deactivates the AUTO mode.

For vehicles first sold in Canada: When not in P (Park), either the Daytime Running Lights or headlights must always be on, due to Canadian safety regulations. Regardless of the headlight control setting, when you shift out of P (Park), the Automatic Headlight System will activate and turn on either the Daytime Running Lights or headlights.

Auto: Enables the Automatic Headlight System, which controls the exterior lights and instrument panel lights depending on outside lighting. See *Automatic Headlight System* ⇨ *145*.

: Turns on the exterior lights, such as parking lights, instrument panel lights, taillights, and license plate lights.

For vehicles first sold in Canada: When not in P (Park), either the Daytime Running Lights or headlights must always be on, due to Canadian safety regulations. Regardless of the headlight control setting, when you shift out of P (Park), the Automatic Headlight System will activate and turn on either the Daytime Running Lights or headlights.

: Turns on the headlights and all the lights listed in .

To activate the headlights in the Controls & Safety app, select > See More Controls > Lights > Headlights.

Lights On in Canada

For vehicles first sold in Canada: When not in P (Park), either the Daytime Running Lights or headlights must always be on, due to Canadian safety regulations. Regardless of the headlight control setting, when you shift out of P (Park), the Automatic Headlight System will activate and turn on either the Daytime Running Lights or headlights.

Optional Reminder If Headlights Are Off

To set a reminder for the vehicle to display a message if it is dark outside and the headlights are off:

NOT FOR RESALE

1. On the front center console display, select > See More Controls > Lights > Headlights.
2. Select > in the upper corner of the Headlights menu.
3. Select the box next to Turn Headlight Reminder On to enable or disable the option.

High-Beam Systems

Manual High-Beam Controls

High/Low-Beam Changer

To manually turn the high beams on, push the turn signal lever away from you. To return to low beams, push the lever again or pull it toward you and release.

The high-beam indicator light appears in the instrument cluster when the high-beam headlights are on.

Flash-to-Pass

To flash the high beams, pull the turn signal lever toward you and release.

Automatic High-Beam System — IntelliBeam

If equipped, this system turns the high-beam headlights on and off automatically when it is dark enough and no other traffic is present.

There is a sensor near the top center of the windshield that automatically detects the lights of oncoming and preceding vehicles. Keep this area of the windshield clear of obstructions for best system performance.

Turning IntelliBeam On and Off

To enable IntelliBeam:

1. Set the Headlights control to Auto or . See *Headlight Controls* ➪ *143*
2. From the infotainment app screen, select Controls > Auto High Beams > On or > See More Controls > Lights > Auto High Beams > On.

The IntelliBeam light AUTO appears in the instrument cluster when the Adaptive Headlight System is enabled.

You can disable the system from the infotainment app screen by selecting > Auto High Beams > Off.

To disable the system when high beams are on, turn on the manual high beams using either the high/low-beam changer or flash-to-pass.

Driving with IntelliBeam

⚠ Warning

Using high beams in dense exhaust, smoke, fog, snow, road spray, mist, or other airborne obstructions can cause a glare, obstructing your vision. This reduction in visibility can result in a crash. Never use high beams in dense exhaust, smoke, fog, snow, road spray, mist, or other airborne obstructions.

The system only activates the high beams when driving over 40 km/h (24 mph).

The blue High-Beam On light AUTO appears on the instrument cluster when the high beams are on.

The high-beam headlights remain on, under automatic control, until one of the following situations occurs:

- The vehicle speed drops below 20 km/h (12 mph).

NOT FOR RESALE

- The outside light is bright enough that high-beam headlights are not required.
- The system detects an approaching vehicle's headlights.
- The system detects a preceding vehicle's taillights.
- You manually disable IntelliBeam.
- You set the headlight control to Off or Parking.

The high-beam headlights may not turn off automatically and must be manually disabled if the system cannot detect another vehicle's lights because of any of the following conditions:

- The other vehicle's lights are missing, damaged, or otherwise undetected.
- The other vehicle's lights are covered or obstructed from view by dense exhaust, smoke, fog, snow, road spray, dirt, mist, or other obstructions.
- The windshield is dirty, cracked, or the light sensor is obstructed.
- A heavy vehicle load raises the front end such that the sensor aim is too high to detect lights.
- You are driving on winding or hilly roads.

Headlights Off Reminder

An audible alert sounds upon opening the driver door if the vehicle is off and the headlights or parking lights are still on. To disable the audible alert, turn off the lights.

Daytime Running Lights

Daytime Running Lights make it easier for others to see the front of your vehicle during the day.

The Automatic Headlight System turns the Daytime Running Lights on and off.

When Daytime Running Lights Turn On

The Daytime Running Lights turn on when all the following conditions are met:

- The vehicle is on
- The headlight control is set to Auto
- The light sensor determines it is daytime

The instrument panel lights, taillights, and other exterior lights do not turn on when the Daytime Running Lights are on.

For vehicles first sold in Canada: When not in P (Park), either the Daytime Running Lights or headlights are always on, regardless of the headlight control setting, due to Canadian safety regulations.

When Daytime Running Lights Turn Off

When it begins to get dark, the automatic headlight system turns off the Daytime Running Lights and turns on the headlights.

The Daytime Running Lights turn off when you either turn on the headlights or turn off the vehicle.

For vehicles first sold in Canada, the Daytime Running Lights turn off only when the vehicle is shifted to P (Park) and the headlight control is set to off or .

Automatic Headlight System

The Automatic Headlight System controls the headlights, other exterior lights, and instrument panel lights depending on the outside light level.

To enable the system, set the headlight control to Auto.

NOT FOR RESALE

- If it is dark enough outside, the system turns on the interior instrument panel lights and the exterior lights, such as headlights, taillights, parking lights, and license plate lights.
- If it is bright enough outside, the system turns off the exterior lights and instrument panel lights and may turn on the Daytime Running Lights.

To turn off the Automatic Headlight System, either turn the headlight control or the vehicle off.

Low Light Conditions During Daylight Hours

When driving through a parking garage, tunnel, or heavy overcast weather, the automatic headlight system may sense a low light level and turn on the headlights. This is normal.

If you start the vehicle in a dark garage, the headlights turn on immediately. If it is light outside when the vehicle leaves the garage, there is a slight delay before the Automatic Headlight System switches over to Daytime Running Lights. During that delay, the instrument cluster may not be as bright as usual. Make sure the instrument panel brightness control is in the full bright position. See *Instrument Panel Illumination Control* ⇨ *147*.

Location of Light Sensor

A light sensor on top of the instrument panel measures the outside light level. See *Instrument Panel Overview* ⇨ *5*.

Do not cover the sensor, otherwise the exterior lights will turn on when not needed.

Lights On with Wipers

If you activate the windshield wipers in the daylight with the vehicle on and the headlight control set to Auto, the headlights, parking lights, and other exterior lights turn on. The transition time for the lights turning on varies based on wiper speed. When the wipers are not operating, these lights turn off.

Set the headlight control to off or Parking to disable this feature.

Headlight Leveling Control

Automatic Headlight Leveling

If equipped, headlight leveling automatically adjusts based on vehicle load to reduce the glare to other drivers.

Hazard Warning Flashers

Hazard warning flashers help alert others that you are having trouble. Press button on the center console to turn the front and rear turn signal flashers on. Press again to turn them off.

When the hazard warning flashers are on, the turn signal lights do not respond to the turn signal lever.

NOT FOR RESALE

The hazard warning flashers turn on automatically if the airbags deploy.

Turn and Lane-Change Signals

Raise or lower the turn signal lever until the arrow on the instrument cluster starts to flash in the corresponding direction. See *Instrument Panel Overview* ⇨ *5*.

Changing Lanes: Hold the lever in place until you complete the lane change. Let go of the lever and it returns to its starting position.

If you raise or lower the lever quickly then release it, the turn signal flashes three times. It flashes six times if Tow/Haul mode is active. See *Driver Mode Control* ⇨ *224*.

If you change lanes without using the turn signal, the Lane Keep Assist system, if equipped, may respond. See *Lane Keep Assist (LKA)* ⇨ *301*.

Turning Corners: Move the lever all the way up or down so that it stays in place when you let go. When you complete the turn, bringing the steering wheel back to center will automatically turn off the turn signal.

If the steering wheel did not turn far enough, the turn signal will remain flashing until you move the lever back to its starting position.

Turn Signal On Alert

If you leave the turn signal on for more than 1.2 km (0.75 mi), an audible alert sounds at each flash of the turn signal. The message TURN SIGNAL ON also appears in the Driver Information Center. To turn off both the audible alert and message, move the turn signal lever back to its starting position.

Turn Signal Not Working Normally

If the indicator arrow flashes rapidly when using the turn signal, an exterior LED may have burned out. See your dealer for service.

If the exterior LED is not burned out, check the fuse. See *Instrument Panel Fuse Block* ⇨ *339*.

Interior Lighting

Instrument Panel Illumination Control

Rotate this thumbwheel to adjust the brightness of all illuminated controls. The thumbwheel is on the instrument panel to the left of the steering wheel.

The brightness can be adjusted only at night or when the headlights or parking lights are on. In daylight, the display brightness automatically adjusts based on outdoor lighting.

Stealth Mode

Stealth mode is only available at night. To enable Stealth mode, turn the thumbwheel to the off position.

NOT FOR RESALE

In Stealth mode, all graphics will not be visible on the instrument cluster except coolant temperature, digital speed, and any active telltales or alerts.

Dome Lights

Dome lights provide overhead interior lighting and lighting in the rear cargo compartment. They may turn on automatically as part of entry lighting and exit lighting.

To turn the dome lights on or off manually, from the app screen on the infotainment display, select > .

Auto Mode

You can set an option for the dome lights to turn on automatically or to stay off when you open any door.

Select > See More Controls > Lights.

Touch > in the upper corner of the Dome Light menu.

Touch the Auto box to enable or disable this option.

Reading Lights

Reading lights are located on the overhead console and over the rear seats. To turn a reading light on or off, press the light lens.

The reading lights are also used as dome lights, and may come on automatically as part of entry lighting and exit lighting. See *Dome Lights* ⇨ *148*.

Front Reading Lights

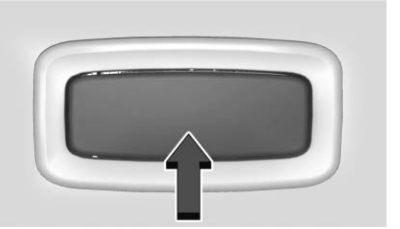

Rear Reading Lights

Lighting Features

Entry Lighting

The entry lighting feature automatically turns on various interior and exterior lights for increased visibility in and around a vehicle.

Interior: The interior lights may turn on when you open any doors or press on the remote key.

For interior lights to turn on, you must enable the Auto option for the dome lights. See *Dome Lights* ⇨ *148*.

Exterior: Some exterior lights also turn on when you press on the remote key.

Low-beam headlights will only turn on briefly at night, or in areas with limited lighting.

NOT FOR RESALE

All interior and exterior lights turn off when you press on the remote key or start the vehicle. The lights eventually turn off automatically if you do not interact with the vehicle.

To change this feature, from the app screen on the infotainment display, select Settings > Vehicle > Lighting.

Approach Detection

If equipped, entry lighting activates when the vehicle detects the remote key within approximately 2 m (6 ft).

If you do not use the remote key or keyless access for an extended period while the vehicle is parked, approach detection deactivates. To reactivate approach detection, press any button on the remote key or open and close all doors.

Exit Lighting

Some exterior lights and interior lights turn on when the driver door is opened after the vehicle is turned off.

The exterior and interior lights remain on for a set amount of time, then automatically turn off.

The interior lights turn on when the vehicle is turned off.

The exterior lights turn off immediately when the headlight control is set to Off.

This feature can be changed. From the app screen on the infotainment display, select Settings > Vehicle > Lighting.

Ambient Lighting

If equipped, the ambient lighting feature allows you to customize the color and brightness of the lights throughout the passenger cabin.

On the infotainment home screen, select Ambient Lighting.

To disable or enable the ambient lighting, slide the on-screen toggle to the desired position.

The Ambient Lighting menu can only appear on one screen at a time. If it is open on the front infotainment screen, it will not appear on the rear center console display, and vice versa.

Disabling Access from the Rear Display

To prevent rear seat passengers from adjusting the ambient lighting settings, disable the rear center console display by selecting > Safety > Rear Control Lock from the front center console display.

Overview

Current Lighting: Select the preset style name to apply it to all cabin ambient lighting.

Customize

Tap a dot to select which ambient lighting zone to change, then select a color family on the color bar. You can then select a specific color from that color family. Select the desired color to apply, then select Confirm to keep the selection.

- Select Sync to apply the same selection to all zones at once.
- Select Undo to revert to the previous selection.

To save your set of selections, select Save to Styles. Your custom style appears on the Overview, Styles, and Modes screen.

NOT FOR RESALE

Brightness

To customize the brightness of each ambient lighting zone, tap the ⊖ or ⊕ icons or drag your finger across the slider bar to increase or decrease brightness.

Sync Brightness: Select this option to apply the same brightness level to all ambient lighting.

Styles

Styles are a series of preset color combinations. Swipe the row of tiles to display more choices. Select a box to change all ambient lighting to that style.

Modes

Link to Drive Mode: If equipped, select this option to pair ambient lighting with drive modes. When you select a drive mode, the ambient lighting changes to a preset color assigned to that mode. This option overrides your selected color on the color palette.

Custom: Select this option to customize each zone separately.

Demo Mode: If equipped, select this option to automatically cycle through the available colors. Demo Mode is only available when the vehicle is in P (Park).

Battery Load Management

Electric Power Management estimates the battery temperature and state of charge. It then adjusts the voltage for best performance and extended life of the battery.

When the battery state of charge is low, the voltage raises slightly to quickly bring the charge back up. When the state of charge is high, the voltage lowers slightly to prevent overcharging. As this adjustment occurs, you may see the voltage move up or down on the voltmeter gauge or voltage display, if equipped, on the instrument cluster. This is normal. If there is a problem, an alert will be displayed. See *Instrument Cluster* ⇨ *117*

For all vehicles, the battery can be discharged at idle if the electrical loads are very high. This is because the generator (alternator) may not be spinning fast enough at idle to produce all the power that is needed for very high electrical loads.

A high electrical load occurs when several of the following are on: headlights, high beams, fog lights, rear window defogger, climate control fan at high speed, heated seats, engine cooling fans, trailer loads, and loads plugged into accessory power outlets.

Electric Power Management prevents excessive discharge of the battery by balancing the generator's output and the vehicle's electrical needs. It can increase engine idle speed to generate more power, whenever needed. It can temporarily reduce the power demands of some accessories.

Normally, these actions occur in steps or levels, without being noticeable. In rare cases at the highest levels of corrective action, you may notice these actions and a Driver Information Center message might be displayed. If so, reduce the electrical loads as much as possible. See *Driver Information Center (DIC)* ⇨ *132*.

Battery Power Protection

This feature helps prevent the battery from being drained if you leave the interior dome lights or reading lights on. These lights automatically turn off 10 minutes after you turn the vehicle off. The lights will not turn back on again until one of the following actions occurs:

- You start the vehicle.
- You close the doors, then re-open them.

NOT FOR RESALE

Exterior Lighting Battery Saver

If you leave the parking lights or headlights on manually, they turn off about 10 minutes after you turn the vehicle off. This protects against draining the battery. To restart the 10-minute timer, turn the headlight control off and then select or .

To keep the lights on for more than 10 minutes, restart the vehicle or put it in accessory mode.

NOT FOR RESALE

Infotainment System

Introduction
Introduction 152
Overview 153
Steering Wheel Controls 154
Using the System 154

Radio
AM-FM Radio 156
Satellite Radio 157
Radio Reception 158
Multi-Band Antenna 158

Audio Players
Avoiding Untrusted Media Devices 158
USB Port 159
Bluetooth Audio 159

Media System
Passenger Infotainment 159

Navigation
Using the Navigation System 162
Maps 163
Navigation Symbols 163
Destination 164
Global Positioning System (GPS) 165
Vehicle Positioning 165
Problems with Route Guidance 165

Voice Recognition
Voice Recognition 166

Phone
Bluetooth (Overview) 167
Bluetooth (Pairing and Using a Phone) ... 168
Apple CarPlay and Android Auto 173

Settings
Settings 174
Teen Driver 177

Trademarks and License Agreements
Trademarks and License Agreements 180

Introduction

Read the following pages to become familiar with the features.

⚠ Warning

Taking your eyes off the road for too long or too often while using any infotainment feature can cause a crash. You or others could be injured or killed. Do not give extended attention to infotainment tasks while driving. Limit your glances at the vehicle displays and focus your attention on driving. Use voice commands whenever possible.

The infotainment system has built-in features intended to help avoid distraction by disabling some features when driving. These features may become disabled on the infotainment apps screen when they are unavailable. Many infotainment features are also available through the instrument cluster and steering wheel controls.

NOT FOR RESALE

Before driving:

- Become familiar with the operation, center stack controls, steering wheel controls, and infotainment display.
- Set up the audio by presetting favorite stations, setting the tone, and adjusting the speakers.
- Set up phone numbers in advance so they can be called easily by pressing a single control or by using a single voice command.

See *Distracted Driving* ⇨ *190*.

Active Noise Cancellation

If equipped, Active Noise Cancellation reduces engine noise in the vehicle's interior.
Active Noise Cancellation requires the factory-installed audio system, radio, speakers, amplifier (if equipped), induction system, and exhaust system to work properly. Deactivation may be required by your dealer if related aftermarket equipment is installed.

Overview

Infotainment System

The infotainment system is controlled by using the infotainment display, Multi-Function Controller on the center console, steering wheel controls, and voice recognition, if available.

Infotainment Controls on the Multi-Function Controller

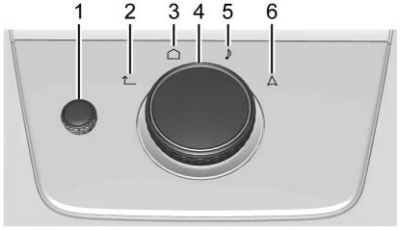

1. (Power/Volume)
   - Press to turn the power on.
   - Press and hold when the system is on to turn the power off.
   - Press to mute/unmute the system when on.
   - Turn to increase or decrease the volume.
2. (Back)

   Select to return to the previous display in a menu.
3. (Home Page)

   Select to access the Home Page. See "Home Page" later in this section.
4. Primary Knob
   - Turn to highlight a feature. Press to activate the highlighted feature.
   - Move right/left or up/down to change the highlighted area on the display screen.
5. (Radio/Audio)

   Select to open the active audio source page.
6. (Navigation)

   Select to access the navigation screen (if equipped).

NOT FOR RESALE

Home Page

The Home Page is where vehicle application icons are accessed. Some applications are disabled when the vehicle is moving.

Swipe left or right across the display or use the Multi-Function Controller to move the home page. Move the knob right/left to change the page.

Managing Home Page Icons

1. Touch and hold any of the Home Page icons to enter edit mode. Edit mode is not available when the vehicle is moving.
2. Continue holding the icon and drag it to the desired position.
3. Release your finger to drop the icon in the desired position.
4. To move an application to another page, drag the icon to the edge of the display toward the desired page
5. Continue dragging and dropping application icons as desired.

There will always be 10 icons per page except on the last page. If an icon is moved from the first page to the second, then that icon from the second page will replace the one removed from the first.

Steering Wheel Controls

If equipped, some audio controls can be adjusted at the steering wheel.

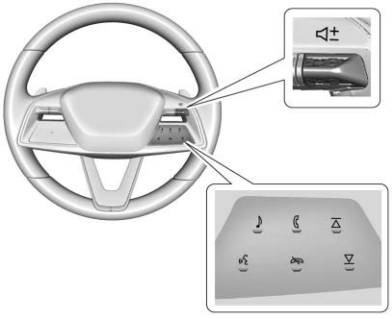

+ or –: Toggle up or down to increase or decrease the volume.

: Press show the audio sources list.

: Press to answer an incoming phone call or show the recent phone call list when not in a call.

or : Press to go to the next or previous favorite when listening to the radio. Press to go to the next or previous track when listening to a media source.

: Press to reject an incoming phone call, end an active phone call, end a voice recognition session, or mute the audio when there is no phone call.

: Press initiate voice assistant.

Using the System

Audio

Touch the Audio icon on the infotainment display or on the Multi-Function Controller to display the active audio source page. Examples of available sources may include AM, FM, SiriusXM (if equipped), USB, and Bluetooth.

Phone

Touch the Phone icon on the infotainment display or on the Multi-Function Controller to display the Phone menu. See *Bluetooth (Pairing and Using a Phone)* ⇨ *168 Bluetooth (Overview)* ⇨ *167*.

NOT FOR RESALE

Apple CarPlay

If equipped, touch the Apple CarPlay icon to activate Apple CarPlay after a supported device is connected. See *Apple CarPlay and Android Auto* ⇨ *173*.

Android Auto

If equipped, touch the Android Auto icon to activate Android Auto after a supported device is connected. See *Apple CarPlay and Android Auto* ⇨ *173*.

Maps

If equipped, touch the Maps icon to display the Google Maps screen. See *Using the Navigation System* ⇨ *162*.

Google Assistant

If equipped, touch the Google Assistant icon to open the Google Assistant app. See *Voice Recognition* ⇨ *166*.

Google Play

If equipped, touch to download some of your favorite apps in your vehicle. Downloading apps on Google Play require you to sign into a Google Account with an active service plan with data. Some third-party apps require a separate account and, in some cases, a paid subscription for in-vehicle access.

Settings

Touch the Settings icon to display the Settings menu. See *Settings* ⇨ *174*.

Controls

Touch the Controls icon to display the Controls menu.

Conversation Enhancement

Microphones and some speakers in the vehicle amplify the speaking volume of passengers to help make conversation between the front and back of the vehicle easier. To turn this feature on or off, touch the Conversation Enhancement icon on the controls home page of the infotainment screen.

Close the windows, doors, roof, and liftgate, and ensure the media volume is at a normal level. The feature will not work if you are playing loud music or during calls or speech recognition sessions.

Application Tray

The Application Tray is along the bottom of the display. It shows up to six applications.

Infotainment Gestures

Use the following finger gestures to control the infotainment system.

Touch/Tap

Touch/tap is used to select an icon or option, activate an application, or change the location inside a map.

Touch and Hold

Touch and hold can be used to move or delete an application.

Drag

Drag is used to move applications on the infotainment home screen, or to pan the map. To drag the item, it must be held and moved along the display to the new location. This can be done up, down, right, or left. This feature is only available when vehicle is parked and not in motion.

NOT FOR RESALE

Nudge

Nudge is used to move items a short distance on a list or a map. To nudge, hold and move the selected item up or down to a new location.

Fling or Swipe

Fling or swipe is used to scroll through a list, pan the map, or change page views. Do this by placing a finger on the display then moving it rapidly up and down or right and left.

Spread

Spread is used to zoom in on a map, certain images, or a web page. Place finger and thumb together on the display, then move them apart.

Pinch

Pinch is used to zoom out on a map, certain images, or a web page. Place finger and thumb apart on the display, then move them together.

Cleaning High Gloss Surfaces, Vehicle Information, and Radio Displays

See *Interior Care* ➪ *389*.

Radio

AM-FM Radio

Playing the Radio

From the infotainment home screen, touch the Audio icon to display the active audio source page. Touch the source icon from the top of the page to choose from AM, FM, SiriusXM, or Bluetooth .

Finding a Station

Seeking a Station

From the AM or FM screen, touch ◁◁ or ▷▷ on the infotainment display to search for the previous or next strong station.

Tune

Touch on the infotainment display to display the Tune screen. Enter a station using the keypad.

The keypad will gray out entries that do not contribute to a valid frequency and will automatically place a decimal point within the frequency number.

Touch to delete one number at a time. Touch and hold to delete all numbers.

A valid AM or FM station will automatically tune to the new frequency and display the now playing screen.

The list of all available stations are on the right side of the Tune display to browse. Touch to go to that station or touch ☆ to save the station as a favorite.

Storing Radio Station Favorites

Saved favorite stations will show at the left of the now playing screen.

AM, FM, or SiriusXM favorites can be stored by touching Hold to Set on the left side of the screen.

Audio Settings

From the AM or FM now playing screen, touch and the following may display:

Sound

- Equalizer
- Fade/Balance
- Sound Mode (if equipped)
- Immersive Audio (if equipped)

NOT FOR RESALE

Adaptive Volume

Touch to turn off or on.

Manage Radio Favorites

Displays a list of audio favorites that can be moved or deleted.

Radio Text (RDS)

When on, radio station name and messages from radio stations will be shown.

Radio Text Categories

When on, category information about current radio content will be shown.

Radio Text–Radio Data System (RDS)

RDS relies on receiving specific RDS information from radio stations and only works when the information is available. It is possible that a radio station could broadcast information that causes the radio to work improperly.

In addition, RDS features are region and country of sale specific. This means specific RDS content may not be available in your listening area or in the country you operate the vehicle.

To turn RDS features on or off, see "Audio Settings" previously.

The following RDS features may be supported by radio broadcasters in your listening area:

Radio Text (RDS) Features

- Display radio station name
- Display messages from radio stations
- Provide radio station category information (when available)

Dolby Atmos

If equipped, Dolby Atmos is a spatial audio technology that creates an immersive sound experience in your vehicle. You just need entertainment created in Dolby Atmos on a compatible app to play content. Use or download a compatible app from the Google Play Store to get started.

Satellite Radio

SiriusXM Radio Service

If equipped, vehicles with a SiriusXM radio subscription can receive SiriusXM programming.

SiriusXM radio has a wide variety of programming and commercial-free music, coast to coast, in digital-quality sound.

In the U.S., see www.siriusxm.com or call 1-888-601-6296. In Canada, see www.siriusxm.ca or call 1-888-539-7474.

When SiriusXM is active, the channel name, number, song title, and artist appear on the display.

SiriusXM with 360L

SiriusXM with 360L interface has enhanced in-vehicle listening experience for subscribers. The experience now offers more categories and system-learned recommendations toward discovering more personalized content.

To use the full SiriusXM 360L program, including streaming content and listening recommendations, OnStar Connected Access is required and Terms and Conditions must be accepted. No paid data subscription is required. Connected vehicle services vary by model and require a complete working electrical system, cell reception, and GPS signal.

Reference the SiriusXM user guide for use and subscription information.

Playing SiriusXM Content

Touch ◀◀, ❚❚, ▶ or ▶▶ on the audio now playing screen to rewind, pause, play, or fast forward content.

NOT FOR RESALE

Finding a Channel

From the SiriusXM now playing screen, touch ◁CH or CH▷ to open the SiriusXM tuner channel list.

To directly tune to a channel, touch the Tune icon to enter a channel number using the keypad.

Browsing Content

Touch ☰ to view different browsing content, including:

Channels, Music, On Demand shows and episodes, Sports and News content.

SiriusXM Settings

From the SiriusXM now playing screen, touch the user settings icon to display the SiriusXM settings.

The settings include subscription information, help and support, and listener preferences.

Radio Reception

Unplug any electronic devices from the accessory power outlets if there is static interference.

FM

FM signals only reach about 16 to 65 km (10 to 40 mi). Although the radio has a built-in electronic circuit that automatically works to reduce interference, some static can occur, especially around tall buildings or hills, causing the sound to fade in and out.

AM

The range for most AM stations is greater than FM, especially at night. The longer range may also cause station frequencies to interfere with each other. Storms and power lines may also interfere with radio reception. Try reducing the treble on the radio if static interference occurs.

SiriusXM Satellite Radio Service

If equipped, SiriusXM Satellite Radio Service provides digital radio reception. Tall buildings or hills can interfere with satellite radio signals, causing the sound to fade in and out. In addition, traveling or parking under heavy foliage, bridges, garages, or tunnels may cause loss of the SiriusXM signal for a period of time. Some cellular services may interfere with SiriusXM reception causing signal loss.

Mobile Devices

Making or receiving calls, charging, or just having a mobile device on may cause static interference. Unplug or turn off any mobile devices if this happens.

Multi-Band Antenna

The multi-band antenna may be used for radio, navigation, and other communication systems, depending on the equipped options. To ensure clear reception, keep the antenna clear of obstructions like snow and ice. An open sunroof or roof-mounted cargo can also affect reception.

Audio Players

Avoiding Untrusted Media Devices

Avoid using untrusted mobile and USB media devices that may negatively affect system operation or performance.

NOT FOR RESALE

USB Port

Caution
To avoid vehicle damage, unplug all accessories and disconnect all accessory cables from the vehicle when not in use. Accessory cables left plugged into the vehicle, unconnected to a device, could be damaged or cause an electrical short if the unconnected end comes in contact with liquids or another power source such as the accessory power outlet.

The vehicle may be equipped with multiple USB ports. Music may be played from a connected USB device. Ports may also be used for charging.

USB Audio

To play music:

1. On the audio now playing screen, select Source> USB.
2. If there is no device connected, connect the device.
3. Supported media content will appear on the display.

Bluetooth Audio

A connected Bluetooth mobile device can play music.

Use the infotainment controls to adjust volume and select songs. Check the volume setting on the infotainment system or the connected mobile device if Bluetooth is selected and no volume is present.

To play music via Bluetooth:

1. On the audio now playing page, touch source and select the desired Bluetooth mobile device.
2. If there is no mobile device connected, follow the screen prompts to pair the device.
3. Supported media content will appear on the display.

Manage Bluetooth Devices

Managing Bluetooth devices allows you to add, delete, or select another paired mobile device.

Only one Bluetooth mobile device can be active at a time.

Some mobile devices support sending Bluetooth music information to display on the radio. For more information about supported Bluetooth features, visit your brand website. See *Online Account and Customer Support* ⇨ *410* for details.

Media System

Passenger Infotainment

If equipped, Passenger Infotainment allows passengers to play content on touch screen displays from the front and/or rear passenger seats.

Passenger Infotainment includes HDMI ports, Bluetooth headphone support, video support and use of the web browser, if equipped.

The Passenger Infotainment displays operate best in temperatures above −20 °C (−4 °F) and below 55 °C (131 °F).

System Operation

Tap anywhere on the equipped passenger screen to power on and view the default screen.

The screen can be turned on and off through the infotainment home screen entertainment hub or on the passenger front or rear screen.

Playback of any media playing through that specific screen is paused when the screen is turned off.

NOT FOR RESALE

The passenger screen can be locked via the Entertainment Hub on the infotainment home screen.

If the vehicle is in D (Drive), the Active Privacy Screen activates on the front passenger display to reduce distractions for the driver.

Entertainment Hub Overview

Select the icon on the infotainment home screen to open the Entertainment Hub. All available passenger displays for the vehicle appear here.

: Select to power off the passenger screen.

: Select to mute headphone audio for the selected passenger screen.

: Select to lock the selected passenger screen.

Entertainment Hub Settings

Select on the Entertainment Hub Overview screen to access the Settings menu.

The menu may contain the following:

Remember Screen Power Status

Select to have screens automatically power on when the vehicle is started.

Factory Reset Passenger Screens

Select to reset the screen to factory settings.

Restart Passenger Screens

Select to restart passenger screens.

Voice-Over

If equipped, Passenger Infotainment has a Voice-Over feature to benefit the visually impaired.

When activated, Voice-Over provides audible feedback to the user about which area on the screen they are touching.

Select Voice-Over to select which equipped screen will use Voice-Over. Voice-Over turns off every time the vehicle is turned off.

Account

Select to show the vehicle data plan.

Legal

Select to view the terms of use.

App View

- Applications (if equipped)
- Web Browser (if equipped)
- HDMI

Quick Controls

Select to access Quick Controls.

- Adjust the Brightness of the selected screen.
- Select the audio source, headphones or speakers.
- Adjust the volume of the selected audio source.
- Add Headphones and adjust headphone settings.
- For rear screens, select to begin a screen share with the adjacent passenger. Follow the prompts to cancel and/or stop the screen share.

Applications and Web Browser

Select to stream media and/or view web content. An active service plan is required.

HDMI Input

An HDMI cable is required to connect an HDMI device to the Passenger Infotainment displays. The HDMI inputs allow connection to video games, disc players, cameras, smartphones, tablets, streaming devices, and A/V dongles that have HDMI (version 1.4a) outputs.

NOT FOR RESALE

Settings

Select ⚙ to access the Settings menu.

The menu may contain the following:

Bluetooth Headphones

To pair Bluetooth headphones:

1. Select Bluetooth Headphones.
2. Select Add Headphones.
3. Set the headphones to Bluetooth pairing mode. Once recognized by the system, the Bluetooth headphones are displayed on the list of available headphones.
4. Select the Bluetooth headphones from the list. Select Options to Rename Headphones.

   Two devices can be paired can per screen.

To disconnect headphones, select Options. Select Disconnect or Forget Headphones.

Quick Remote

A remote may be used to navigate the passenger display screen while the vehicle is parked or in motion. This remote will appear on a mobile device.

To connect the remote, connect to the vehicle's Wi-Fi, follow on-screen prompts, and scan the QR code. Once connected, a trackpad will be available to navigate the passenger screen.

Additional remote features may also be available depending on the app selected from the home screen.

Voice-Over

If equipped, this feature benefits from the visually impaired.

When enabled, Voice-Over provides audible feedback about which area on the screen is selected, identifying active buttons, and providing information feedback of screen identification, current status, list content, metadata, and pop-up information. Double tap anywhere on the screen to hear the last single touched, audibly announced, selection.

Select Voice-Over to select which equipped screen will use Voice-Over. Voice-Over turns off every time the vehicle is turned off.

Factory Reset Screen

Select to reset the screen to factory settings, log out of apps, erase paired headphones and clear the web browser cache.

Open Source License

Select to show the license information.

Legal

Select to show the legal information.

About

Select to show System version.

Consumer Ports

If equipped with a front passenger display, the Consumer Ports are located in the glove box. This includes an HDMI port and a USB-C charge port only.

The Consumer Ports for the rear passenger displays are in the rear of the center console.

The HDMI input allows an HDMI A/V cable to be connected from an auxiliary device such as a camcorder, video game system, or Apple device. A cable from Apple is required for Apple devices.

Touch the HDMI port that the external device was connected to on the home screen.

For HDMI devices that support USB charging, the USB port can be used as a power source.

Content from this HDMI port is not accessible through the infotainment display.

NOT FOR RESALE

To use the HDMI input:

1. Connect the auxiliary device with an HDMI cable.
2. Power on both the auxiliary device and the passenger screen.
3. Select HDMI as the source. Touch to share the screen with another passenger screen.

Troubleshooting

No power: The vehicle might not be on.

There is no sound from the headphones with the indicator light on: The vehicle might not be on.

- Make sure the headphones have sufficient charge. Plug the headphones to a USB-C port to charge.
- Check to see if headphones are paired to the screen.

If the steps above do not work, then unpair the headphones from the screen, turn the headphones off, turn them back on, and attempt to pair them. See "Customer Owned Bluetooth Headphones" previously in this section.

Video Distortion

Video distortion can occur when operating cellular phones, scanners, CB radios, Global Positioning Systems (GPS), two-way radios, mobile faxes, or walkie talkies.

It might be necessary to turn off the video player when operating one of these devices in or near the vehicle.

Navigation

Using the Navigation System

Google Maps provides the navigation software in this vehicle. This section provides a general overview and is subject to change. For the most current functional information, visit g.co/mapsincar.

To begin using the system, you must accept the Terms and Conditions.

Internet Connectivity

Google Maps requires an active subscription data plan to deliver full functionality, including offline map availability.

With an applicable connected services plan, Google Maps can automatically download offline maps before losing connectivity, allowing you to continue navigating without internet connectivity.

Profiles

Sign in to your Google Account to receive personalized services such as saved locations, custom maps, and real-time recommendations. Google Account information appears as available.

To log into a profile, see Accounts under *Settings* ⇨ *174*.

Voice Assistant

If equipped, you can control Google Maps using voice commands. See Google Assistant under *Voice Recognition* ⇨ *166*.

Language and Units

To change the language and units, see *Settings* ⇨ *174*.

Mute Settings

During active route guidance, Google Maps provides audible voice directions and traffic alerts. These can be muted as needed. In

NOT FOR RESALE

the Google Maps app, select Settings > Mute settings to access the guidance audio options. Alternatively, mute audible voice directions and traffic alerts by tapping the sound icon on the navigation map screen during active navigation.

Compass

You can adjust Google Maps orientation by selecting the compass icon. Select to change between the direction currently traveling, north, and route overview.

To recenter the map to the current location, select the location icon.

Super Cruise

If equipped, Super Cruise highlights routes in a specific outline. See *Super Cruise* ⇨ *255*.

Trailer Navigation

If equipped, Trailer Navigation plans a route to your destination that is drivable with your trailer. See *Destination* ⇨ *164*.

Maps

Auto-Downloaded Maps

Google Maps downloads maps automatically for use when not connected to the Internet. Offline maps make map data available to vehicle features regardless of connectivity.

To turn on auto-download:

1. Open Google Maps.
2. Touch the Settings icon.
3. Touch Privacy center, then select Offline maps.
4. Select Auto-download offline maps.
5. Check the Internet connection and wait for the download to finish.

Downloading Offline Maps

1. Open Google Maps.
2. Touch Settings, then Offline maps.
3. Touch the Select your own map square icon.
4. Adjust the map to cover the desired area to download.
5. Touch Download.

Navigation Symbols

The following are the most common symbols that may appear in Google Maps.

This indicates the vehicle's current location and direction on the map.

The destination pin marks the location of the final destination. Touch the pin to view the destination address or to add it or remove it from the Favorites list. Hide the information by touching the pin one more time. It will automatically time out if no action is taken.

A second pin in the menu is the route overview. Touch this pin to show more details of the destination or to remove the destination.

NOT FOR RESALE

Destination

Searching for a Destination

A destination can be searched using Google Assistant.

To search for a destination without Google Assistant:

1. Open Google Maps.
2. Touch the Search field.
3. Enter the destination.
4. Touch the Navigation icon.

Alternate Routes

Alternate routes are displayed as separate lines. While in either Turn-by-Turn navigation or on the route overview, touch the suggested alternate route.

Adding a Stop on Route by Voice

1. While in Turn-by-Turn navigation, touch the Search icon at the bottom.
2. Touch the Google Assistant mic icon and say the destination to search by voice.
3. Select the desired search result from the list.
4. Touch the Add stop icon.

Adding a Stop on Route by Category

1. While in Turn-by-Turn navigation, touch the Search icon at the bottom.
2. Select a category.
3. Select the desired search result from the list.
4. Touch the Add stop icon.

Adding a Home or Work Address

To edit a home or work address, an account must be logged in. See Profiles and Accounts under *Settings* ➪ *174*.

1. Open Google Maps.
2. Touch Settings, then touch Edit home or work.
3. Enter the address.

Search by Category

Destinations can be searched by category, such as restaurant or grocery store.

1. Open Google Maps.
2. Touch the search bar.
3. Touch Categories, then select a category.
4. Touch the desired location, then touch the Navigation icon.

Avoid Tolls, Highways, or Ferries

1. Open Google Maps.
2. Touch the Settings icon.
3. Select Route options.
4. Select the desired options and then touch X to close.

An Alternative Way for General Route Options

1. During active route guidance, touch Route Overview.
2. Select Route options.
3. Select the desired option and then touch X to close.

Traffic Layers

1. Open Google Maps.
2. Touch the Settings icon.
3. Touch Traffic to turn on or off.

Trailer Navigation

If equipped, Trailer Navigation plans a route to your destination that is drivable with your trailer. The system is designed to help avoid bridges, overpasses, and other potential hazards that are not drivable with your trailer.

NOT FOR RESALE

Select Trailering App on the infotainment display and follow the on-screen instructions for trailer profile setup to save your trailer dimensions.

For additional information, see "Trailering App" in the Trailer Towing Supplement. See *General Towing Information* ➪ *306*.

Global Positioning System (GPS)

GPS uses satellite and various vehicle signals to determine the current vehicle position for the navigation system.

Interference from the satellite condition, road configuration, condition of the vehicle, and/or other circumstances can affect the navigation system's ability to determine the accurate position of the vehicle.

This system might not be available or interference can occur if any of the following are true:

- Signals are obstructed by tall buildings, trees, large trucks, or a tunnel.
- Satellites are being repaired or improved.

For more information if GPS is not functioning properly, see *Problems with Route Guidance* ➪ *165*.

Vehicle Positioning

At times, the position of the vehicle on the map could be inaccurate due to one or more of the following reasons:

- The road system changes.
- You are driving on slippery road surfaces such as sand, gravel, or snow.
- You are traveling on winding roads or long, straight roads.
- The vehicle is approaching a tall building or a large vehicle.
- The vehicle is running parallel to a freeway on surface streets.
- A vehicle carrier or ferry is transferring the vehicle.
- The current position calibration is set incorrectly.
- You are traveling at high speed.
- You are changing directions often, or the vehicle is on a turntable in a parking lot.
- You are driving into or exiting out of a parking lot, garage, or a lot with a roof.
- The vehicle is unable to receive a GPS signal.
- The vehicle has a roof carrier.
- The vehicle has tire traction devices.
- The vehicle has newly replaced or worn tires.
- The tire pressure is incorrect.
- The navigation system is using map data for the first time after an update.
- The 12-volt battery has been disconnected for several days.
- You are driving in heavy traffic at low speeds and the vehicle is stopping and starting repeatedly.

Problems with Route Guidance

Incorrect route guidance can occur under one or more of the following conditions:

- Missing a turn on the indicated road.
- Turning at an intersection.
- Recent changes to roads, or roads not listed in Maps.

Additionally, route guidance may be unavailable if:

- Using automatic rerouting for the next right or left turn.

NOT FOR RESALE

- Regulations (time, season, construction zone, etc.) prohibit vehicle entry.
- The route is not found.

When navigating to a destination that does not pass through the set waypoint, the system may automatically recalculate the route to return to the waypoint.

To recalibrate the map position, park in a safe, open area free from large obstructions, with the vehicle on for two to five minutes until the position updates.

Voice Recognition

If equipped, the vehicle's built-in Assistant allows for hands-free use of media and messaging, navigation and climate control functionality in the vehicle. To activate, quickly press and release on the steering wheel, touch Google Assistant on the infotainment apps screen, or use the wake up words "Hey Google" or "OK Google." Google Assistant must be set as the default assistant for steering wheel and wake word activation to work.

However, not all features within these areas are supported by voice commands and requires the user to have a valid data subscription plan or connected to Wi-Fi in order to use some of the Google Assistant features.

Using Voice Recognition

Voice recognition becomes available once the system is initialized. This begins when the vehicle is turned on. Initialization may take a few moments.

1. Quickly press and release on the steering wheel controls, touch Google Assistant on the infotainment apps screen, or use the wake up words "Hey Google" or "OK Google" to activate voice recognition. Google Assistant must be set as the Default Assistant for the and the wake word options to work.
2. Clearly speak one of the commands described later in this section.

Canceling Google Assistant

- Press on the steering wheel controls to cancel the Google Assistant request.

Helpful Hints for Speaking Commands

Voice recognition identifies commands that are naturally stated in sentence form, or direct commands that state the application and the task.

For best results:

- Speak the command naturally, not too fast, not too slow.
- Use direct commands without a lot of extra words. For example, "Call <name> at work," "Play" followed by the artist or song name, or "Play" followed by the radio station number.

Direct commands are more clearly understood by the system. An example of a direct command is "Dial <number>."

If a cell phone number was saved with a name and a place, the direct command should include both. For example "Call <name> at work."

Voice Recognition for the Radio

When voice is started, the voice recognition commands for AM, FM, SiriusXM (if equipped), and media apps (if supported) are available.

NOT FOR RESALE

“Play <AM frequency> AM”: Tune to the radio station frequency identified in the command (like “nine fifty”).

“Play <FM frequency> FM”: Tune to the radio station frequency identified in the command (like “one oh one point one”).

“Play channel <SiriusXM channel number> on SiriusXM” : Tune to the SiriusXM radio station channel number identified in the command. This command may require an online connection.

“Play <SiriusXM channel name> on SiriusXM”: Tune to the SiriusXM radio station channel name identified in the command. This command may require an online connection.

“Play <Media> on <Audio Source>” : Play media like a song or channel using a specified audio source such as Pandora or Spotify. This command may require an online connection.

Voice Recognition for the Phone

Make sure the phone is paired using Bluetooth to use the phone related voice commands.

“Call <contact name>”: Initiate a call to a stored contact. The command may include location if the contact has location numbers stored. You must accept Personal Results permission during set up for access to the contacts.

“Call < phone number>”: Initiate a call to a phone number of seven digits or 10 digits.

“Send a message to <contact name>”: Send a message to a stored contact.

Voice Recognition for Navigation

Navigation commands can be used to start, cancel route, or add waypoints/points of interest (POI).

“Navigate to <destination address>”: Initiate navigation to the address in the command.

“Find a <Place of Interest>”: Find and initiate navigation to a POI in the command.

“Add <destination> on my way”: Adds a waypoint to the current route.

“Take me home”: Starts navigation to Home location set in Google maps.

Onboard Vehicle Commands

These commands can be used to adjust vehicle temperature, control window defrosters and obtain fuel information.

“Turn on the A/C”: Turns on the air conditioning.

“How much gas do I have left”: Find out how much fuel your vehicle has left.

“Set temperature to <desired number> degrees”: Set to a specific temperature inside your vehicle.

Phone Assistant Voice Recognition

While a mobile phone is connected via Bluetooth, Android Auto, or Apple CarPlay, press and hold on the steering wheel controls until you hear a response from the phone's voice assistant to pass through and launch the Voice Assistant on the connected mobile phone (e.g., Google Assistant, Siri, etc.).

Phone

Bluetooth (Overview)

The vehicle’s Bluetooth system can interact with a mobile device to:

- Place and receive calls in a hands-free mode.
- Share the device’s address book or contact list with the vehicle.
- Stream audio (music, podcasts).
- Notify receipt and reply to text messages depending on phone type.

NOT FOR RESALE

To minimize driver distraction, before driving, and with the vehicle parked:

- Become familiar with the features of the mobile device. Organize the phone book and contact lists clearly and delete duplicate or unused entries.
- Review the controls and operation of the infotainment system.
- Pair mobile device(s) to the vehicle. The system may not work with all mobile devices. See “Pairing” later in this section.

Vehicles with a Bluetooth system can use a Bluetooth-capable mobile device with a Hands-Free Profile to make and receive phone calls. The infotainment system and voice recognition are used to control the system. The system can be used while the vehicle is on. The range of the Bluetooth system can be up to 9.1 m (30 ft). Not all mobile devices support all functions and not all mobile devices work with the Bluetooth system. See *Online Account and Customer Support* ➪ *410* for more information about compatible mobile devices.

Controls

Use the controls on the infotainment display and the steering wheel to operate the Bluetooth system.

Steering Wheel Controls

: Press and hold until you hear a response from the phone's voice assistant to start voice recognition on your mobile phone that is connected through Bluetooth. If there is an incoming call, then a press and release will answer the call.

: Press to end a call, decline a call, or cancel an operation. Press to mute or unmute the infotainment system when not on a call.

Infotainment System Controls

For information about how to navigate the menu system using the infotainment controls, see *Using the System* ➪ *154*.

Audio System

When using the Bluetooth system, sound comes through the vehicle's front audio system speakers and overrides the audio system. The volume level while on a mobile device phone call can be adjusted by pressing the steering wheel volume controls or the volume controls for the infotainment system. The adjusted volume level remains the same for later calls. The volume cannot be lowered beyond a certain level.

Bluetooth (Pairing and Using a Phone)

Pairing

A Bluetooth-enabled mobile device must be paired to the Bluetooth system and then connected to the vehicle before it can be used. See the mobile device manufacturer's user guide for Bluetooth functions before pairing the device.

Pairing Information

- Select the Phone icon on the infotainment app screen.
- If no mobile device has been paired, a message on the infotainment display will show the Manage Phones option. Select this option and the Phones screen will display. See “Pairing a Phone” later in this section.
- A mobile device with music capability can be paired to the vehicle as a phone and a music player at the same time.

NOT FOR RESALE

- Up to 10 devices can be paired to the Bluetooth system.
- The pairing process is disabled when the vehicle is moving.
- Pairing only needs to be completed once, unless the pairing information on the mobile device changes or the phone is deleted from the system.
- If a previously paired mobile device is not connecting to the Bluetooth system, try forgetting the mobile device on the vehicle's infotainment system and also forgetting the vehicle in the Bluetooth settings of the mobile device. Then repeat the pairing process.
- If multiple paired mobile devices are within range of the system, the system connects to the paired mobile device that is set to First to Connect. If there is no mobile device set to First to Connect, it will connect to the mobile device which was used last. To connect to a different paired mobile device, see "Connecting to a Different Phone" later in this section.

Pairing a Phone

1. Make sure Bluetooth has been enabled on the mobile device before starting the pairing process.
2. Select the Phone icon on the infotainment app screen.
3. If a mobile device has been previously added, select Settings > Connections > Phones to reach the device manager. From the device manager, select "Add Phone." If a phone has been previously added, the "Add Phone" card will just be a "+" button.
4. Select Manage Phones to display the Phones screen.
5. Select Add Phone.

   If a mobile device has been previously added or disconnected, the "Add Phone" card will just be a "+" card.
6. Select the phone name on the infotainment screen of the vehicle name on the phone.
7. The code on both the mobile device and infotainment display need to be acknowledged for pairing to be successful.
8. Follow the instructions on the mobile device to confirm the six-digit code showing on the infotainment display and select Pair. The codes on the mobile device and infotainment display need to be acknowledged for pairing to be successful.
9. If a previously paired mobile device is not connecting to the Bluetooth system, try forgetting the mobile device on the vehicle's infotainment system and also forgetting the vehicle in the Bluetooth settings of the mobile device.
10. If the vehicle name does not appear on your mobile device under the "other devices" or "available devices" menu, there are a few ways to start the pairing process over:
    - Turn Bluetooth off then back on, on your mobile device.
    - Go back to the beginning of the Phone menus on the infotainment display and restart the pairing process.
    - Turn the mobile device off and then back on.
    - Reset the mobile device, but this step should be done as a last effort.

NOT FOR RESALE

11. If the mobile device prompts to accept connection or allow phone book download, select Always Accept and Allow. The phone book may not be available if not accepted.
12. To pair additional mobile devices, select Settings > Connections > Phones.

First to Connect Paired Phones

If multiple paired mobile devices are within range of the system, the system connects to the paired phone that is set as First to Connect. To enable a paired mobile device as the First to Connect phone:

1. Make sure the mobile device is turned on.
2. Select the Settings icon on the infotainment app screen.
3. Select Connections.
4. Select Phone.
5. Select Options under the connected phone.
6. Select First to Connect from the phone's settings menu and set First to Connect to On.

Phones and mobile devices can be added, removed, connected, and disconnected. A sub-menu will display whenever a request is made to add or manage phones and mobile devices.

Accessing the Device List Screen

There are two ways to access the device list screen:

Using the Settings Icon

1. Select the Settings icon on the infotainment app screen or the Settings icon on the application tray near the left of the display.
2. Select Connections.
3. Select Phones.

Using the Phone Icon

1. Select the Phone icon on the infotainment app screen or the Phone icon on the application tray near the left of the display.
2. Select ⚙ on the Phones screen.
3. Select Connected Phone.

Disconnecting a Connected Phone

To disconnect a phone:

1. Open the Device List Screen. See "Accessing the Device List Screen" previously in this section.
2. Select Option on the phone card to show the phone's or mobile device's settings.
3. Select the prompt to disconnect the phone.

Deleting a Paired Phone

To delete a paired phone:

1. Open the Device List Screen. See "Accessing the Device List Screen" previously in this section.
2. Select Option on the phone card to show the phone's or mobile device's settings.
3. Select Forget Phone.

Connecting to a Different Phone

To connect to a different phone, the new phone must be in the vehicle and paired to the Bluetooth system.

To connect to a different phone:

1. Open the Device List Screen. See "Accessing the Device List Screen" previously in this section.
2. Select the new phone you want to connect to from the list of available phones. See "First to Connect Paired Phones" previously in this section.

NOT FOR RESALE

Switching to Handset or Hands-Free Mode

To switch between handset or hands-free mode:

- While the active call is hands-free, select the Audio Output option, then select Phone to switch to the handset mode.

  The mute icon will not be available or functional while Handset mode is active.
- While the active call is on the handset, select the Audio Output option, then select Car Speakers to switch to the hands-free mode.

Making a Call Using Contacts

Calls can be made through the Bluetooth system using personal phone contact information for all phones that support the Phone Book feature. Become familiar with the phone settings and operation and that the phone is set to allow the sharing of contacts over Bluetooth with the vehicle. Verify the phone supports this feature and that the phone is set to allow the sharing of contacts over Bluetooth with the vehicle.

The Contacts menu accesses the phone book stored in the phone.

To make a call using the Contacts menu:

1. Select the Phone icon on the infotainment app screen or on the application tray near the left of the display.
2. Select Contacts.

   If a contact has more than one assigned number, a window will appear with the option to choose a phone number from a list. Select the preferred number to call and then confirm if the selection is “Just once” or “Always.” By choosing “Always” the selection made will remain the default number assigned to this contact for as long as the phone is connected to the vehicle.
3. There are two methods to search for contacts:
   - Search bar – Select the search icon on the top right of the Phones window and type the name or number of the contact on the keyboard. Search results will be displayed corresponding to the user input. Select the name to call.
   - Scroll – Select the list and scroll, or use the scrollbar on the left side of the Phones window. Select the name to call.

Making a Call Using the Recents Menu

The Recents menu accesses the recents call list from your phone.

To make a call using the Recents menu:

1. Select the Phone icon on the infotainment app screen or on the application tray near the left of the display.
2. Select Recents.
3. There are two methods for placing a call:
   - Select the name or phone number to call.
   - Select the contact card to the right of the name or phone number. Within the contact card select the phone number to call.

Making a Call Using the Keypad

To make a call by dialing the numbers:

1. Select the Phone icon on the infotainment app screen or on the application tray near the left of the display.
2. Select Keypad and enter a phone number.
3. There are two methods for placing a call:
   - Select the phone icon in the keypad.

NOT FOR RESALE

- Select the contact name to the right of the keypad. If the phone number is stored with a contact, the contact will appear as the number is typed into the keypad.

Searching Contacts Using the Keypad

To search for contacts using the keypad:

1. Select the Phone icon on the infotainment app screen.
2. Select Keypad and enter partial phone numbers or contact names using the digits on the keypad to search.

   Results appear on the right side of the display. Select one to place a call.

Accepting or Declining a Call

When an incoming call is received, the infotainment system mutes and a ring tone is heard in the vehicle.

Accepting a Call

To Accept a call, select Answer on the infotainment display.

Declining a Call

To decline a call, press on the steering wheel controls or Decline on the infotainment display.

Call Waiting, Merging, and Conferencing

Call waiting, merging, and conferencing must be supported on the Bluetooth mobile device and enabled by the wireless service carrier to work.

When an incoming call is received during an active call, press on the steering wheel controls or “Answer” from the infotainment display. This will answer the incoming call and place the active call on hold.

To switch between the calls, select the Switch icon on the infotainment display.

To merge the calls, select “Merge” within the Active Call Screen on the infotainment display. This creates a three-way conference. If another call is received during a three-way conference, it can be answered, but it will place the conference on hold.

Making a Call Using Favorites

1. Select the Phone icon on the infotainment app screen or on the application tray near the left of the display.
2. Select Favorites.
   - The vehicle can sync up to five favorites from the phone.
   - The vehicle can also store up to five additional contacts as vehicle favorites. These will be stored for as long as the phone is paired and connected. If the phone is unpaired/forgotten by the vehicle, the vehicle favorites will be deleted.

To add a favorite for the vehicle:

1. Select “Add Favorite.”
2. Select a contact from the Phone Book.
3. Select the star icon next to the phone number to add as a favorite.

Ending a Call

- Press on the steering wheel controls.
- Select on the infotainment display, next to a call, to end only that call.

NOT FOR RESALE

Dual Tone Multi-Frequency Tones

The in-vehicle Bluetooth system can send numbers during a call. This is used when calling a menu-driven phone system. Use the Keypad to enter the number.

Apple CarPlay and Android Auto

If equipped, Apple CarPlay and/or Android Auto capability may be available through a compatible smartphone. If the phone is paired and projections are available, Apple CarPlay and/or Android Auto icons will become illuminated on the infotainment app screen.

To use Apple CarPlay and/or Android Auto:

For Wired Phone Projection

1. For Android 9 smartphones and older, download the Android Auto app to your phone from the Google Play Store. There is no app required for Apple CarPlay.
2. Connect your Android phone or Apple iPhone by using the factory-provided phone USB cable and plugging into a USB data port. For best performance, it is highly recommended to use the device's factory-provided USB cable, which should be replaced after significant wear to maintain connection quality. Aftermarket or third-party cables may not work.
3. When the phone is first connected, to activate Apple CarPlay or Android Auto, accept the terms and conditions on both the infotainment system and the phone.
4. Follow the instructions on the phone.

The Android Auto and Apple CarPlay icons on the infotainment app screen will illuminate. Android Auto and/or Apple CarPlay may automatically launch the next time the USB is connected. If not, select the Android Auto or Apple CarPlay icon on the infotainment app screen to launch.

Press the home button on the center stack to return to the infotainment home screen.

For Wireless Phone Projection

Verify your phone is wireless compatible by visiting the Android Auto or Apple CarPlay support page.

1. For Android 9 smartphones and older, download the Android Auto app to your phone from the phones Google Play Store. There is no app required for Apple CarPlay.
2. For first time connection, make sure Bluetooth and Wi-Fi are turned on in phone settings. To connect the phone over Bluetooth, see *Bluetooth (Pairing and Using a Phone)* ➪ *168* *Bluetooth (Overview)* ➪ *167*.
3. When the phone is first connected, to activate Apple CarPlay or Android Auto, agree to the terms and conditions on both the infotainment system and the phone.
4. Follow the instructions on the phone.

The Android Auto and Apple CarPlay icons on the infotainment app screen will illuminate. Android Auto and/or Apple CarPlay may automatically launch upon wireless connection. If not, select the Android Auto or Apple CarPlay icon on the infotainment app screen to launch.

Wireless CarPlay and/or Wireless Android Auto may experience occasional service disruption due to outside Wi-Fi interference.

To disconnect the phones wireless projection for that paired device:

1. Select the Settings from the infotainment app screen.
2. Select Connections.
3. Select Phones or Devices.

NOT FOR RESALE

4. Select the Bluetooth icon or Options on the phone card.
5. Select Connection Type from the list and choose Bluetooth Calling and Media.

Press the home button on the center stack to return to the infotainment home screen.

Features are subject to change. For further information on how to set up Android Auto and Apple CarPlay in the vehicle, visit your brand website. See *Online Account and Customer Support* ⇨ *410* for details.

CarPlay will not support Fast Connect on iPhones with iOS version 13 or older.

Android Auto is provided by Google and is subject to Google's terms and privacy policy. Apple CarPlay is provided by Apple and is subject to Apple's terms and privacy policy. Data plan rates apply. For Android Auto support and to see if your phone is compatible, see www.android.com/auto/compatability. For Apple CarPlay support and to see if your phone is compatible, see www.apple.com/ios/carplay/. Apple or Google may change or suspend availability at any time. Google, Android, Android Auto, Google Maps, and other marks are trademarks of Google LLC. Apple CarPlay is a trademark of Apple Inc.

Press the home button on the center stack to exit Android Auto or Apple CarPlay. To enter back into Android Auto or Apple CarPlay, press and hold the home button on the center stack.

If applicable, Android Auto and/or Apple CarPlay may be disabled from the infotainment system. To do this, from the app screen select Settings > Connections. Scroll down the list to find Android Auto or Apple CarPlay. Use the On/Off toggle to turn Android Auto or Apple CarPlay on or off for the entire system.

Settings

To access the Settings menus:

1. Touch Settings on the infotainment home screen.
2. Touch the desired feature setting.
3. Touch the options on the infotainment display to change a setting.
4. Touch < to go back.

The Settings menu may contain the following:

Connections

The menu may contain the following:

Devices

Allows connecting to a different cell phone or mobile device source, disconnecting a cell phone or media device, or deleting a cell phone or media device.

Apple CarPlay

Allows connecting Apple CarPlay in your vehicle when a compatible phone is connected.

Android Auto

Allows connecting Android Auto in your vehicle when a compatible phone is connected.

Wi-Fi Networks

Shows connected and available Wi-Fi networks.

Wi-Fi Hotspot

Allows adjustment of different Wi-Fi features.

Vehicle-to-Phone Sharing

Allows GM apps to use vehicle data on the listed phones shown.

NOT FOR RESALE

Trusted Device

Allows for setting a phone as your trusted device to establish a secure communication channel between your phone and vehicle that enables convenient features like instant profile unlocking and account sign in. When nearby, your trusted device is recognized automatically via a unique Bluetooth connection. Requires MyBrand app.

Vehicle

The menu may contain the following:

Audio Settings

Allows adjustment of different audio settings.

Drive Mode Customization

See *Driver Mode Control* ➪ *224*.

Teen Driver

See *Teen Driver* ➪ *177*.

Doors and Locks

Allows adjustment of different door lock settings.

Valet Mode

Allows adjustment of the valet mode settings.

Rear Seat Reminder

Allows for an audible alert and a message when the rear door has been opened before or during operation of the vehicle.

Buckle to Drive

See *Buckle To Drive* ➪ *63*.

Super Cruise Lane Change

See *Super Cruise* ➪ *255*.

Turn Signal Activated View

Allows adjustment of Turn Signal Activated View settings.

Trailer Length Indicator

Allows adjustment of Trailer Length Indicator.

Climate and Air Quality

Allows adjustment of different climate settings.

Speed Assist

Allows adjustment of different speed assist settings.

Collision/Detection Systems

Allows adjustment of different driver assistance system settings.

Comfort and Convenience

Allows adjustment of different comfort and convenience settings.

Driver Attention Assist

Allows adjustment of different sensitivity levels for drowsiness attention settings.

Lighting

Allows adjustment of different lighting settings.

Remote Lock, Unlock, and Start

Allows adjustment of different remote lock settings.

Ride Height

Allows adjustment of different ride height settings.

Phone Call Audio

Allows adjustment of different phone call audio settings.

NOT FOR RESALE

Power Assist Steps

Allows adjustment of different seating position settings.

Seating Position

Allows adjustment of different seating position settings.

Suspension

Allows adjustment of different suspension settings.

Transport Mode

Allows transport mode to be turned on or off and will take effect after the vehicle has been restarted.

Notifications

Shows a list of installed apps and the permissions used.

Apps

Shows app settings and information.

Date/Time

Allows setting of the clock.

Display

Allows adjustment of the infotainment display.

Sounds

Allows adjustment of the infotainment system sounds.

Profiles and Accounts

Modifies the infotainment system's profiles and provides access to the accounts assigned to the currently active profile. Profiles can be setup and/or modified as Admin profiles or Guest profiles.

Privacy

Allows adjustment of the infotainment privacy settings.

Accessibility

Shows the accessibility information on the infotainment system.

Assistant and Voice

Allows adjustment of assistant and voice settings.

Security

Allows adjustment of the infotainment security settings.

System

The menu may contain the following:

Language

This will set the display language used on the infotainment display.

Keyboard and Speech

Touch to change keyboard and speech settings.

Units

Touch to change units settings.

Reset Options

Touch to change reset settings. The submenu "Erase Infotainment Data" is only accessible if the profile logged into the vehicle is configured as an "admin".

TTY Mode

Touch to turn off or on.

NOT FOR RESALE

Storage

Shows the storage info on the infotainment system.

About

Touch to view the infotainment system software information.

Legal Information

Touch to view legal and license information.

Updates

See *How Your Vehicle is Updated* ⇨ *427*.

Google

Allows adjustment of the Google settings.

Teen Driver

If equipped, this allows multiple keys to be registered for beginner drivers to encourage safe driving habits. When the vehicle is started with a Teen Driver key, it will automatically activate certain safety systems, allow setting of some features, and limit the use of others. The Report Card will record vehicle data about driving behavior that can be viewed later.

When the vehicle is started with a registered key, the Driver Information Center displays a message that Teen Driver is active.

To access:

1. From the infotainment apps screen, select Settings > Vehicle > Teen Driver.
2. Create a PIN by choosing a four-digit PIN. Re-enter the PIN to confirm. To change the PIN, touch Change PIN.

The PIN is required to:

- Set up/add or remove keys.
- Change Teen Driver settings.
- Change or clear the Teen Driver PIN.
- Access or delete Report Card data.

Set up/add keys to activate Teen Driver and assign restrictions to the key:

Any vehicle key can be registered, up to a maximum of eight keys. Label the key to tell it apart from the other keys.

For a pushbutton start system:

1. Start the vehicle.
2. For automatic transmissions, the vehicle must be in P (Park). For manual transmissions, the vehicle must be stopped with the parking brake set.
3. From the infotainment apps screen, select Settings > Vehicle > Teen Driver.
4. Enter the PIN.
5. Place the remote key you wish to register in the transmitter pocket. The key does not need to be the one that started the vehicle.
6. From the Teen Driver menu, touch Setup Keys or Add/Remove Teen Driver Keys.
   - If the remote key has not previously been registered, the option to add the key displays. Touch Add and a confirmation message displays. Teen Driver restrictions will be applied whenever this remote key is used to operate the vehicle.
   - If the remote key has already been registered, the option to remove the key displays. If Remove is touched, the remote key is no longer registered. A confirmation message displays, and Teen Driver restrictions will not be applied if this remote key is used to operate the vehicle.

NOT FOR RESALE

In vehicles with a pushbutton start system, if a Teen Driver and a non-Teen Driver key are both present at start up, the vehicle will recognize the non-Teen Driver key to start the vehicle. The Teen Driver settings will not be active.

For a keyed ignition system:

1. Start the vehicle.
2. For automatic transmissions, the vehicle must be in P (Park). For manual transmissions, the vehicle must be stopped with the parking brake set.
3. From the infotainment apps screen, select Settings > Vehicle > Teen Driver.
4. Enter the PIN.
5. Touch Setup Keys or Add/Remove Teen Driver Keys. The system displays instructions for registering or unregistering a key. A confirmation message displays.

Manage Settings or Teen Driver Settings

Depending on the options of your vehicle, the following menu items may be displayed:

Buckle to Drive : When turned on, Buckle to Drive prevents the driver from shifting out of P (Park) for a period of time after the brake pedal is pressed if the driver, or on some vehicles the detected passenger, has not buckled their seat belt. On some vehicles, Buckle to Drive is always on when Teen Driver is active and is not configurable.

Audio Volume Limit : Allows a maximum audio volume to be set. Turn the audio volume limit on or off. Use the arrows to choose the maximum allowable level for the audio volume. On some infotainment systems, touch Set Audio Volume Limit to choose the maximum allowable audio volume level.

Set Audio Volume Limit : Use the arrows to choose the maximum allowable level for the audio volume.

Teen Driver Speed Limiter : Limits the maximum speed of the vehicle. When the speed limiter is turned on and the vehicle is started with a Teen Driver key, the Driver Information Center displays a message that the top speed is limited.

On certain vehicles, when the Speed Limiter is turned on, the vehicle's maximum acceleration will be limited. The Driver Information Center will display a message that the acceleration is limited.

Teen Driver Speed Warning : Displays a warning in the Driver Information Center when exceeding a selectable speed. Turn the speed warning on or off and choose the desired speed warning level. The speed warning does not limit the speed of the vehicle. On some infotainment systems, touch Set Teen Driver Speed Warning to set the warning speed.

Set Teen Driver Speed Warning : Choose the desired speed warning level. The speed warning does not limit the speed of the vehicle.

When Teen Driver is Active:

- If equipped, the radio will mute when the driver seat belt, and in some vehicles the front passenger seat belt, is not buckled. The audio from any device paired to the vehicle will also be muted.
- An object placed on the front passenger seat, such as a briefcase, handbag, grocery bag, laptop, or other electronic device, could cause the passenger sensing system to falsely sense an unbuckled front passenger and mute the radio. If this happens, remove the object from the seat.
- Some safety systems, such as Automatic Emergency Braking, if equipped, cannot be turned off.

NOT FOR RESALE

- The gap setting for Adaptive Cruise Control and alert timing for Forward Collision Alert, if equipped, cannot be changed.
- When trying to change a safety feature that is not configurable in Teen Driver, the feature may be grayed out or removed from the infotainment menu, or the Driver Information Center will display a message indicating that Teen Driver is active and the action is not available.
- Super Cruise, if equipped, is not available.
- Enhanced Low Fuel Warning (if equipped) – When the vehicle is low on fuel, the low fuel light on the instrument cluster flashes and the Driver Information Center low fuel warning cannot be dismissed.
- Do not tow a trailer if equipped with Automatic Emergency Braking.
- Daytime Running Lights or headlights are always on when the vehicle is shifted out of P (Park). Even if the headlight control is set to off or ≡00≡, the Automatic Headlight System is engaged and ensures that either the Daytime Running Lights or headlights come on based on outside light level.

Report Card

The vehicle owner must secure the driver's consent to record certain vehicle data when the vehicle is driven with a registered Teen Driver key. There is one Report Card per vehicle. Data is only recorded when a registered Teen Driver key is used to operate the vehicle.

The Report Card data is collected from the time Teen Driver is activated or the last time the Report Card was reset. The following items may be recorded:

- Distance Driven – the total distance driven.
- Maximum Speed – the maximum vehicle speed detected.
- Overspeed Warnings – the number of times the speed warning setting was exceeded.
- Wide Open Throttle – the number of times the accelerator pedal was pressed nearly all the way down.
- Forward Collision Alerts (if equipped) – the number of times the driver was notified when approaching a vehicle ahead too quickly and at potential risk for a crash.
- Forward Automatic Braking, also called Automatic Emergency Braking (if equipped) – the number of times the vehicle detected that a forward collision was imminent and applied the brakes.
- Reverse Automatic Braking (if equipped) – the number of times the vehicle detected that a rearward collision was imminent and applied the brakes.
- Traction Control – the number of times the Traction Control System activated to reduce wheel spin or loss of traction.
- Stability Control – the number of events which required the use of electronic stability control.
- Antilock Braking System Active – the number of Antilock Brake System (ABS) activations.
- Tailgating Alerts (if equipped) – the number of times the driver was alerted for following a vehicle ahead too closely.

Report Card Data

Cumulative Data is saved for all trips until the Report Card is reset or until the maximum count is exceeded. If the maximum count is exceeded for a Report Card line item, that item will no

NOT FOR RESALE

longer be updated in the Report Card until it is reset. Each item will report a maximum of 1,000 counts. The distance driven will report a maximum of 64,374 km (40,000 mi).

To delete Report Card data, do one of the following:

- From the Report Card display, touch Reset.
- Touch Clear PIN and All Teen Driver Keys from the Teen Driver menu. This will also unregister any Teen Driver keys and delete the PIN.

Forgotten PIN

See your dealer to reset the PIN.

Trademarks and License Agreements

"Made for iPhone" means that an electronic accessory has been designed to connect specifically to iPhone, and has been certified by the developer to meet Apple performance standards. Apple is not responsible for the operation of this device or its compliance with safety and regulatory standards. Please note that the use of this accessory with iPhone may affect wireless performance. iPhone is a trademark of Apple Inc., registered in the U.S. and other countries.

Android is a trademark of Google LLC.

Trial length and service availability may vary by model, model year, or trim. Service will automatically stop at the end of your trial subscription period unless you decide to continue service. If you do not wish to enjoy your trial, you can cancel by calling the number below. All SiriusXM services require a subscription, each sold separately by SiriusXM after the trial period. Service subject to the applicable SiriusXM Customer Agreement and Privacy Policy, visit www.siriusxm.com (USA) or www.siriusxm.ca (Canada) to see complete terms and how to cancel which includes calling 1-866-635-2349 (USA) or 1-888-539-7474 (Canada). Some services and features are subject to device capabilities and location availability. Content varies by SiriusXM subscription package. All fees, content, and features are subject to change.

SiriusXM with 360L: Some features, including streaming content and listening recommendations, require an active OnStar Connected Access plan and may vary by vehicle model. Content varies by SiriusXM subscription plan. GM connected vehicle services vary by vehicle model and require active service plan, working electrical system, cell reception, and GPS signal. See onstar.com for details and limitations.

SiriusXM, Pandora, Stitcher, and all related logos are trademarks of SiriusXM Radio Inc. and its respective subsidiaries.

NOT FOR RESALE

SiriusXM satellite service is only available in the 48 contiguous United States (and Puerto Rico with limited availability) and Canada.

In Canada: Some deterioration of service may occur in extreme northern latitudes. This is beyond the control of SiriusXM.

Explicit Language Notice: Channels with frequent explicit language are indicated with an "XL" after the channel name. Family-friendly packages are available by contacting SiriusXM:

- USA Customers — See www.siriusxm.com or call 1-888-601-6296.
- Canada Customers — See www.siriusxm.ca or call 1-877-438-9677.

It is prohibited to copy, decompile, disassemble, reverse engineer, hack, manipulate, or otherwise make available any technology or software incorporated in receivers compatible with the SiriusXM Satellite Radio System or that support the SiriusXM website, the Online Service, or any of its content.

General Requirements:

1. A License Agreement from SiriusXM is required for any product that incorporates SiriusXM Technology and/or for use of any of the SiriusXM marks to be manufactured, distributed, or marketed in the SiriusXM Service Area.
2. For products to be distributed, marketed, and/or sold in Canada, a separate agreement is required with SiriusXM Canada Inc.

immersion®

TouchSense Technology and TouchSense System 1000 Series Licensed from Immersion Corporation. TouchSense System 1000 is protected under one or more of the U.S. Patents at the following address www.immersion.com/patent-marking.html and other patents pending.

Bose

Bose AudioPilot and Bose Centerpoint surround are registered trademarks of Bose Corporation in the U.S. and other countries.

Bluetooth

The Bluetooth word mark and logos are owned by the Bluetooth SIG, Inc. and any use of such marks by General Motors is under license. Other trademarks and trade names are those of their respective owners.

Java

Java is a registered trademark of Oracle and/or its affiliates.

MPEG4–AVC (H.264)

THIS PRODUCT IS LICENSED UNDER THE AVC PATENT PORTFOLIO LICENSE FOR THE PERSONAL AND NON-COMMERCIAL USE OF A CONSUMER TO (i) ENCODE VIDEO IN COMPLIANCE WITH THE AVC STANDARD ("AVC VIDEO") AND/OR (ii) DECODE AVC VIDEO THAT WAS ENCODED BY A CONSUMER ENGAGED IN A PERSONAL AND NON-COMMERCIAL ACTIVITY AND/OR WAS OBTAINED FROM A VIDEO PROVIDER LICENSED TO PROVIDE AVC VIDEO. NO LICENSE IS GRANTED OR SHALL BE

NOT FOR RESALE

IMPLIED FOR ANY OTHER USE. ADDITIONAL INFORMATION MAY BE OBTAINED FROM MPEG LA, L.L.C. SEE HTTPS://WWW.MPEGLA.COM.

VC-1

THIS PRODUCT IS LICENSED UNDER THE VC-1 PATENT PORTFOLIO LICENSE FOR THE PERSONAL AND NON-COMMERCIAL USE OF A CONSUMER TO (i) ENCODE VIDEO IN COMPLIANCE WITH THE VC-1 STANDARD ("VC-1 VIDEO") AND/OR (ii) DECODE VC-1 VIDEO THAT WAS ENCODED BY A CONSUMER ENGAGED IN A PERSONAL AND NON-COMMERCIAL ACTIVITY AND/OR WAS OBTAINED FROM A VIDEO PROVIDER LICENSED TO PROVIDE VC-1 VIDEO. NO LICENSE IS GRANTED OR SHALL BE IMPLIED FOR ANY OTHER USE. ADDITIONAL INFORMATION MAY BE OBTAINED FROM MPEG LA, L.L.C. SEE HTTPS://WWW.MPEGLA.COM.

MPEG4–Visual

USE OF THIS PRODUCT IN ANY MANNER THAT COMPLIES WITH THE MPEG-4 VISUAL STANDARD IS PROHIBITED, EXCEPT FOR USE BY A CONSUMER ENGAGING IN PERSONAL AND NON-COMMERCIAL ACTIVITIES.

MP3

MPEG Layer-3 audio coding technology licensed from Fraunhofer IIS and Thomson.

WMV/WMA

This product includes technology owned by Microsoft Corporation and under a license from Microsoft Licensing, GP. Use or distribution of such technology outside of this product is prohibited without a license from Microsoft Corporation and/or Microsoft Licensing, GP as applicable.

NOT FOR RESALE

Climate Controls

Climate Control Systems
Climate Control Systems 183
Rear Climate Control System 185
Air Vents
Air Vents 186
Maintenance
Passenger Compartment Air Filter 187
Service 188

Climate Control Systems

The fan speed, air delivery, and recirculation to heat or cool the vehicle can be controlled from the front console. Choose from available options:

- ON/OFF
- Rear Window Defogger
- Max Defrost
- Climate Zone Selection Launch Button
- Recirculation
- SYNC (Synchronized Temperature)
- A/C (Air Conditioning)
- ∧, ∨ Driver and Passenger Temperature
- , Fan Control
- AUTO (Automatic) Operation

Automatic Operation

The system automatically controls the fan speed, air delivery, and recirculation to heat or cool the vehicle to the desired temperature.

When AUTO is selected, the system is in full automatic operation. If the air delivery mode or fan setting is manually adjusted, the AUTO indicator turns off and the display shows the selected settings. AUTO operation can be turned off individually for climate settings.

For automatic operation:

1. Press AUTO.
2. Set the temperature. Allow the system time to stabilize. Then adjust the temperature as needed for best comfort.

To improve efficiency and to warm or cool the vehicle faster, recirculation is automatically selected. The recirculation light will not come on. Press to select recirculation. Press it again to select outside air.

OFF: Press OFF to turn the fan on or off. When OFF is selected, the system stops air from flowing into the cabin. If ON is selected or any other buttons are pressed, the climate control system will turn on and operate at the current setting.

▲ / ▼ **:** The temperature can be adjusted separately for the driver and the passenger. Press to decrease or increase the temperature. Press and hold to rapidly increase or decrease the temperature. Press SYNC to reset the passenger temperature to the driver temperature.

NOT FOR RESALE

Front, 2nd Row: Touch to open the Climate Zone Selection. The second and third row climate control settings, if equipped, can now be adjusted from the front passenger area.

Manual Operation

▼ ▲ **:** Press to decrease or increase the fan speed. Press and hold the fan controls to adjust speed more quickly. The fan speed setting displays. Any adjustment of the fan speed cancels automatic fan control and the fan can be controlled manually. Press AUTO to return to automatic operation.

To turn off the fan and climate control system, press OFF on the center stack climate controls. The airflow will be blocked from entering in all air delivery modes, except defrost.

The maximum automatic fan speed can be set to low, medium, or high. To adjust Auto Fan Speed, select Settings > Climate and Air Quality > Auto Fan Speed.

Vents and Air Distribution: See *Air Vents* ⇨ *186*.

A/C: Press to turn the air conditioning on or off. An indicator light comes on to show that the air conditioning is enabled. If the fan is turned off, the air conditioner will not run.

Press AUTO to return to automatic operation and the air conditioner runs as needed.

If fogging reoccurs while in vent or in a combination mode with mild temperature throughout the vehicle, turn on the air conditioner to reduce windshield fogging.

MAX **:** Clears the windshield of fog or frost more quickly. Air is directed to the windshield. Press MAX to turn on or off. Changing the air delivery mode also turns the defrost off.

: Press to alternate between recirculating air inside the vehicle or pulling in outside air. The indicator light on the button is lit when recirculation mode is active. This helps to quickly cool the air inside the vehicle and reduce the entry of outside air and odors.

Pressing this button cancels automatic recirculation. Press AUTO to return to automatic operation. Recirculation runs automatically as needed.

Manual recirculation mode is not available when in Defrost.

The climate control system uses a sensor to automatically detect high humidity inside the vehicle. When high humidity is detected, the climate control system may adjust to outside air supply, turn on the heater and air conditioner, increase fan and temperature, and direct more air to the windshield. When the climate control system does not detect window fogging, it returns to normal operation. To turn Auto Defog off or on, select Settings > Climate and Air Quality > Auto Defog > Select ON or OFF. If Auto Defog is turned off, or fogging does not clear quickly enough, select MAX to quickly clear the windshield.

Rear Window Defogger

Caution
Do not try to clear frost or other material from the inside of the front windshield and rear window with a razor blade or anything else that is sharp. This may damage the rear window defogger grid and affect the radio's ability to pick up stations clearly. The repairs would not be covered by the vehicle warranty.

REAR **:** Press to turn the rear window defogger on or off. An indicator on the button comes on to show that the rear window defogger is on.

The rear window defogger only works when the vehicle is on.

NOT FOR RESALE

The rear window defogger can be set to automatic operation. When Auto Rear Defog is selected, the rear window defogger turns on automatically when the vehicle is first started in cold weather and turns off when the vehicle is warmed. To turn Auto Rear Defog off or on, select Settings > Climate and Air Quality > Auto Rear Defog > Select ON or OFF.

The heated outside rearview mirrors turn on when the rear window defogger button is on and help to clear fog or frost from the surface of the mirrors.

Sensor

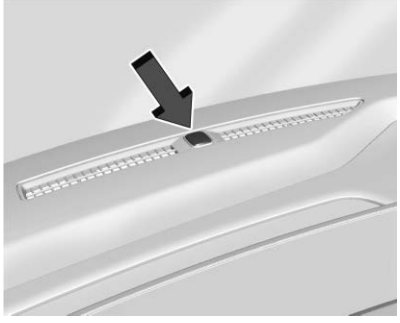

The solar sensor, on top of the instrument panel near the windshield, monitors the solar heat.

The climate control system uses the sensor information to adjust the temperature, fan speed, recirculation, and air delivery mode for best comfort.

If the sensor is covered, the automatic climate control system may not work properly.

Remote Start Climate Control Operation: The climate control system may run when the vehicle is started remotely. The system uses the driver's previous settings to heat or cool the inside of the vehicle. The rear defog may come on during remote start based on cold ambient conditions. The rear defog indicator light does not come on during a remote start. If equipped with heated or cooled seats, they may come on during a remote start. See *Remote Start* ⇨ *14* and *Heated and Ventilated Front Seats* ⇨ *50*.

Afterblow Feature

If equipped, under certain conditions, the fan may stay on or may turn on and off several times after you turn off and lock the vehicle. This is normal.

Rear Climate Control System

If equipped, the rear climate controls can be adjusted from the front or rear seating areas by selecting the appropriate zone from the climate zone selection. See *Climate Control Systems* ⇨ *183*.

ON/OFF: Touch ON/OFF on the display to turn the rear climate control on or off.

▲ / ▼ **:** The temperature can be adjusted separately for the left and right side seating areas. Press to decrease or increase the temperature. Press and hold to rapidly increase or decrease the temperature.

▼ ✣ ▲ **:** Press to decrease or increase the fan speed. Press and hold the fan controls to adjust the speed more quickly. The fan speed setting displays. Any adjustment of the fan speed cancels automatic fan control and the fan can be controlled manually. Press AUTO to return to automatic operation.

AUTO: Press to turn on or off. The air delivery is controlled automatically. If the temperature or fan speed is manually adjusted, this cancels full automatic operation.

NOT FOR RESALE

SYNC: Touch to match the rear climate control settings to the front climate control driver settings. The SYNC button is highlighted.

Rear: Touch to open the rear climate control screen. The rear climate control settings can now be adjusted from the rear seating area.

Air Vents

To change direction of airflow in the front row, use the control knob on the air vents located in the center and on the sides of the instrument panel. To open or close the airflow, use the control knob next to the air vents on the instrument panel. See *Instrument Panel Overview* ⇨ *5*.

In the second row, use the air vent control knobs on the center console and center trim near the door to change direction of airflow or open and close airflow. There are also adjustable overhead outlets in the rear passenger area.

Keep all outlets open whenever possible for best system performance. Air vents blow warm air on the side windows in cold weather. If floor, defog, or defrost modes are selected, a small amount of air will come from the vents closest to the window.

Air Distribution Control – Vents Tab

Air Delivery Mode Control: Touch the desired air delivery mode to change the direction of the airflow. The selected air delivery mode button is lit. Pressing any of the air delivery buttons cancels automatic air delivery control, allowing the direction of the airflow to be controlled manually. Press AUTO to return to automatic operation.

To change the current mode, select one or more of the following:

: Air is directed to the windshield, outboard instrument panel vents, and side window vents.

: Air is directed to the instrument panel vents.

: Air is directed to the floor vents.

Touch 2nd Row to open the rear vent control.

Operation Tips

- Clear away any ice, snow, or leaves from air inlets at the base of the windshield that could block the flow of air into the vehicle.
- Clear snow off the hood to improve visibility and help decrease moisture drawn into the vehicle.
- Keep the path under the front seats clear of objects to help circulate the air inside of the vehicle more effectively.
- Use of non-GM approved hood deflectors can adversely affect the performance of the system. Check with your dealer before adding equipment to the outside of the vehicle.
- Do not attach any devices to the air vent slats. This will restrict airflow and may cause damage to the air vents.

NOT FOR RESALE

Maintenance

Passenger Compartment Air Filter

The filter reduces the dust, pollen, and other airborne irritants from outside air that is pulled into the vehicle. To replace the filter, follow these steps:

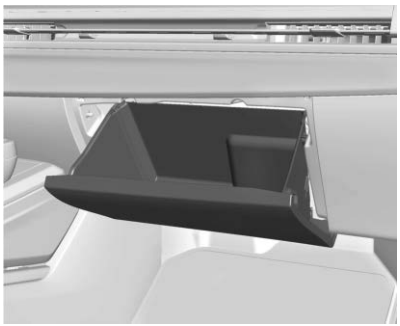

1. Open the glove box door completely.

2. Press the sides of the glove box bin inward to clear the stoppers and rotate downward to lower the bin.

3. Unhook the string dampener to fully remove the glove box bin.

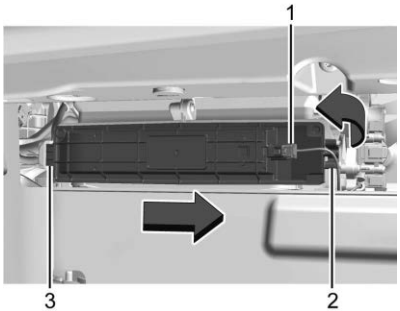

4. Unhook the power cable (1) on the right side of the filter door, unhook the door and pull out (2), then unhook from the left side (3) to remove the door. Remove the old filter.
5. Install the new air filter.
6. Reinstall the filter door.
7. Reverse steps 1 through 4 to reinstall the glove box.

See your dealer if additional assistance is needed.

NOT FOR RESALE

Service

All vehicles have a label underhood that identifies the refrigerant used in the vehicle. The refrigerant system should only be serviced by trained and certified technicians. The air conditioning evaporator should never be repaired or replaced by one from a salvage vehicle. It should only be replaced by a new evaporator to ensure proper and safe operation.

During service, all refrigerants should be reclaimed with proper equipment. Venting refrigerants directly to the atmosphere is harmful to the environment and may also create unsafe conditions based on inhalation, combustion, frostbite, or other health-based concerns.

NOT FOR RESALE

Driving and Operating

Driving Information
Driving for Better Fuel Economy 190
Distracted Driving 190
Defensive Driving 191
Impaired Driving 191
Control of a Vehicle 191
Braking 191
Steering 192
Off-Road Recovery 192
Loss of Control 193
Off-Road Driving 193
Driving on Wet Roads 197
Hill and Mountain Roads 198
Winter Driving 198
If the Vehicle Is Stuck 199
Vehicle Load Limits 200

Starting and Operating
New Vehicle Break-In 204
Ignition Positions 204
Starting the Engine 206
Stop/Start System 206
Engine Heater 208
Retained Accessory Power (RAP) 209
Parking over Things That Burn 209
Dynamic Fuel Management 209
Extended Parking 209

Engine Exhaust
Engine Exhaust 210
Running the Vehicle While Parked 210

Automatic Transmission
Automatic Transmission 210
Manual Mode (Non V-Series) 214
Manual Mode (V-Series Only) 214

Drive Systems
Four-Wheel Drive 215

Brakes
Electric Brake Boost 220
Antilock Brake System (ABS) 220
Electric Parking Brake 220
Brake Assist 222
Post-Collision Braking (Secondary Collision Mitigation Braking) 222
Hill Start Assist (HSA) 222
Automatic Vehicle Hold (AVH) 222

Ride Control Systems
Traction Control/Electronic Stability Control 223
Driver Mode Control 224
Magnetic Ride Control 228
Limited-Slip Differential 228
Air Suspension 228

Cruise Control
Adaptive Cruise Control (Advanced) 231
Hands-On Steering Assist (Lane Centering Assistance) 242
Super Cruise 255

Advanced Driver Assistance Systems
Advanced Driver Assistance Systems 271
Assistance Systems for Parking or Backing 272
Rear Vision Camera (RVC) 273
Surround Vision System 273
Park Assist 276
Automatic Parking Assist (APA) 278
Reverse Automatic Braking (RAB) 280
Rear Pedestrian Alert 281
Rear Cross Traffic Alert (RCTA) System 282
Assistance Systems for Driving 284
Forward Collision Alert (FCA) System 284
Automatic Emergency Braking (AEB) 286
Front Pedestrian Braking (FPB) System .. 290
Night Vision System 292
Lane Change Alert (LCA) 294
Blind Zone Steering Assist (BZSA) 297
Traffic Sign Assistant 298
Driver Attention Assist 300
Lane Keep Assist (LKA) 301
Surround Vision Recorder 302

Fuel
Top Tier Fuel 303
Recommended Fuel 304

NOT FOR RESALE

Prohibited Fuels 304
Fuels in Foreign Countries 304
Fuel Additives 304
Filling the Tank 304
Filling a Portable Fuel Container 306

Trailer Towing
General Towing Information 306

Conversions and Add-Ons
Add-On Electrical Equipment 307

Driving Information

Driving for Better Fuel Economy

Driving habits can affect fuel mileage. Here are some driving tips to get the best fuel economy possible:

- Set the climate controls to the desired temperature after the engine is started, or turn them off when not required.
- Avoid fast starts and accelerate smoothly.
- Brake gradually and avoid abrupt stops.
- Avoid idling the engine for long periods of time.
- When road and weather conditions are appropriate, use cruise control.
- Always follow posted speed limits or drive more slowly when conditions require.
- Keep vehicle tires properly inflated.
- Combine several trips into a single trip.
- Replace the vehicle's tires with the same TPC Spec number molded into the tire's sidewall near the size.
- Follow recommended scheduled maintenance.

Distracted Driving

⚠ Warning

Taking your eyes off the road too long or too often could cause a crash resulting in injury or death. Focus your attention on driving.

Distraction comes in many forms and can take your focus from driving. Exercise good judgment when engaging with vehicle functions. Limit activities that may divert attention away from the road. Many local governments have enacted laws regarding driver distraction. Become familiar with the local laws in your area.

To avoid distracted driving, keep your eyes on the road, keep your hands on the steering wheel, and focus your attention on driving.

- Do not use a phone in demanding driving situations. Use a hands-free method to place or receive necessary phone calls.
- Watch the road. Do not read, take notes, or look up information on phones or other electronic devices.
- Designate a front seat passenger, if possible, to handle potential distractions.

NOT FOR RESALE

- Become familiar with vehicle features before driving, such as programming favorite radio stations and adjusting climate control and seat settings.
- Program all trip information into any navigation device prior to driving.
- Wait until parked to retrieve items that have fallen to the floor.
- Stop or park the vehicle to tend to children.
- Keep pets in an appropriate carrier or restraint.
- Avoid stressful conversations while driving, whether with a passenger or on a cell phone.

Refer to the infotainment section for more information on using that system and the navigation system, if equipped, including pairing and using a cell phone.

Defensive Driving

Defensive driving means to always expect the unexpected. The first step in driving defensively is to wear a seat belt. See *Seat Belts* ➪ *62*.

- Assume that other road users (pedestrians, bicyclists, and other drivers) are going to be careless and make mistakes. Anticipate what they may do and be ready.
- Allow enough following distance between your vehicle and the vehicle in front of you.
- Focus on the task of driving.

Impaired Driving

⚠ Warning

Drinking alcohol or taking drugs and then driving is very dangerous. Your reflexes, perceptions, attentiveness, and judgment can be affected by even a small amount of alcohol or drugs. You can have a serious — or even fatal — collision if you drive after drinking or taking drugs.

Do not drive while under the influence of alcohol or drugs, or ride with a driver who has been drinking or is impaired by drugs. Find alternate transportation home; or if you are with a group, designate a driver who will remain sober.

Death and injury associated with impaired driving is a global tragedy.

Control of a Vehicle

Braking, steering, and accelerating are important factors in helping to control a vehicle while driving.

Braking

Braking action involves perception time and reaction time. Deciding to push the brake pedal is perception time. Actually doing it is reaction time.

Average driver reaction time is about three-quarters of a second. In that time, a vehicle moving at 100 km/h (60 mph) travels 20 m (66 ft) and may not have enough time to stop in an emergency.

Tips for stopping safely include:

- Keep a safe following distance from the vehicle in front of you.
- Avoid needless heavy braking.
- Keep pace with traffic.

NOT FOR RESALE

If a brake fault occurs, the brakes may lose power assist. Without power assist, the brake pedal will be harder to push, and it can take longer to stop the vehicle.

If the engine were to stall or stop while driving, the electric brake boost system maintains power assist for as long as the battery has sufficient voltage. Steer the vehicle out of the roadway and stop as soon as it is safe to do so. See *Electric Brake Boost* ⇨ *220*.

Steering

Caution
To avoid damage to the steering system, do not drive over curbs, parking barriers, or similar objects at speeds greater than 3 km/h (1 mph). Use care when driving over other objects such as lane dividers and speed bumps. Damage caused by misuse of the vehicle is not covered by the vehicle warranty.

Electric Power Steering

The vehicle has an electric power steering system, which reduces the effort needed to steer. It does not have power steering fluid. The system does not require regular maintenance.

If the vehicle experiences a system malfunction and loses power steering, it may require greater steering effort. Turning the steering wheel as far as it can go and holding it there with force for an extended period may also reduce power steering assist.

See your dealer if there is a problem with the electric power steering system.

Curve Tips

- Reduce your speed before entering a curve.
- Take and maintain a safe and controlled speed through curves.
- Wait until the vehicle is out of the curve before gently accelerating into the straightaway.

Steering in Emergencies

- In some situations, steering around a problem may be more effective than braking.
- You can hold both sides of the steering wheel to turn 180 degrees without removing a hand.
- The Antilock Brake System (ABS) allows steering while braking.

Off-Road Recovery

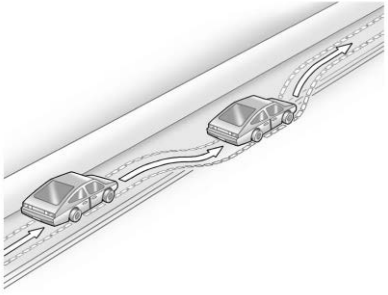

The vehicle's right wheels can drop off the edge of a road onto the shoulder while driving. Follow these tips:

1. Ease off the accelerator and then, if there is nothing in the way, steer the vehicle so that it straddles the edge of the pavement.

NOT FOR RESALE

2. Turn the steering wheel about one-eighth of a turn, until the right front tire contacts the pavement edge.
3. Turn the steering wheel to go straight down the roadway.

Loss of Control

Skidding

There are three types of skids that correspond to the vehicle's three control systems:

Braking Skid: Wheels are not rolling.

Steering or Cornering Skid : Too much speed or steering in a curve causes tires to slip and lose cornering force.

Acceleration Skid : Too much throttle causes the driving wheels to spin.

Antilock brakes help to avoid only the braking skid.

Defensive drivers avoid most skids by taking reasonable care suited to existing conditions, and by not exceeding those conditions. But skids are always possible.

If the vehicle starts to skid, follow these suggestions:

- Ease your foot off the accelerator pedal and steer the way you want the vehicle to go. The vehicle may straighten out, but if it skids again from oversteer, be ready to correct another skid if it occurs.
- Slow down and adjust your driving according to weather conditions. Stopping distance may be longer and vehicle control may be affected when traction is reduced by water, snow, ice, gravel, or other material on the road. Learn to recognize warning clues — such as enough water, ice, or packed snow on the road to make a mirrored surface — and slow down when you have any doubt.
- Try to avoid sudden steering, acceleration, or braking, including reducing vehicle speed by shifting to a lower gear. Any sudden changes could cause the tires to slide.

Off-Road Driving

⚠ Warning

Off-roading features are intended for use by experienced and qualified drivers. Uneven terrain and rough surfaces combined with improper driver inputs for the conditions may result in bouncing, quick changes in direction or loss of control of the vehicle, particularly when driving at higher speeds. You or others could be injured or killed. Always drive safely and exercise appropriate caution for the conditions. Always wear your seat belt.

Four-wheel-drive vehicles can be used for off-road driving. Vehicles without four-wheel drive and vehicles not equipped with All Terrain or On-Off Road tires must not be driven off-road except on a level, solid surface. For contact information about the original equipment tires, see the warranty manual.

One of the best ways for successful off-road driving is to control the speed.

NOT FOR RESALE

Before Driving Off-Road

- Have all necessary maintenance and service work completed.
- Fuel the vehicle, fill fluid levels, and check inflation pressure in all tires, including the spare, if equipped.
- Read all the information about four-wheel-drive vehicles in this manual.
- Know the local laws that apply to off-road driving.

Loading the Vehicle for Off-Road Driving

Warning

- Unsecured cargo on the load floor can be tossed about when driving over rough terrain. You or your passengers can be struck by flying objects. Secure the cargo properly.
- Keep cargo in the cargo area as far forward and as low as possible. The heaviest things should be on the floor, forward of the rear axle.

(Continued)

Warning (Continued)

- Heavy loads on the roof raise the vehicle's center of gravity, making it more likely to roll over. You can be seriously or fatally injured if the vehicle rolls over. Put heavy loads inside the cargo area, not on the roof.

For more information about loading the vehicle, see *Vehicle Load Limits* ➪ *200* and *Tires* ➪ *345*.

Environmental Concerns

- Always use established trails, roads, and areas that have been set aside for public off-road recreational driving and obey all posted regulations.
- Do not damage shrubs, flowers, trees, or grasses or disturb wildlife.
- Do not park over things that burn. See *Parking over Things That Burn* ➪ *209*.

Driving on Hills

Warning

Many hills are simply too steep for any vehicle. Driving up hills can cause the vehicle to stall. Driving down hills can cause loss of control. Driving across hills can cause a rollover. You could be injured or killed. Do not drive on steep hills.

Driving safely on hills requires good judgment and an understanding of what the vehicle can and cannot do.

Before driving on a hill, assess the steepness, traction, and obstructions. If the terrain ahead cannot be seen, get out of the vehicle and walk the hill before driving further.

When driving on hills:

- Use a low gear and keep a firm grip on the steering wheel.
- Maintain a slow speed.
- When possible, drive straight up or down the hill.
- Slow down when approaching the top of the hill.

NOT FOR RESALE

⚠ Warning

Driving to the top of a hill at high speed can cause a crash. There could be a drop-off, embankment, cliff, or even another vehicle. You could be seriously injured or killed. As you near the top of a hill, slow down and stay alert.

- Use headlights even during the day to make the vehicle more visible.
- Never go downhill forward or backward with either the transmission or transfer case in N (Neutral). The brakes could overheat and you could lose control.

⚠ Warning

If the vehicle has the two-speed automatic or electronic transfer case, shifting the transfer case to N (Neutral) can cause your vehicle to roll even if the transmission is in P (Park). This is because the N (Neutral) position on the transfer case overrides the transmission. You or someone else could be injured. If leaving the vehicle, set the

(Continued)

Warning (Continued)

parking brake and shift the transmission to P (Park). Shift the transfer case to any position but N (Neutral).

- When driving down a hill, keep the vehicle headed straight down. Use a low gear because the engine will work with the brakes to slow the vehicle and help keep the vehicle under control.

⚠ Warning

Heavy braking when going down a hill can cause your brakes to overheat and fade. This could cause loss of control and you or others could be injured or killed. Apply the brakes lightly when descending a hill and use a low gear to keep vehicle speed under control.

- Avoid turns that take the vehicle across the incline of the hill. Driving across an incline puts more weight on the downhill wheels, which could cause a downhill slide or a rollover.
- Loose gravel, muddy spots, or even wet grass can cause the tires to slip sideways, downhill. If the vehicle slips sideways, it can hit something and potentially roll over.
- Hidden obstacles can make the steepness of the incline more severe. If a rock is driven across with the uphill wheels, or if the downhill wheels drop into a rut or depression, the vehicle can tilt even more.
- If an incline must be driven across, and the vehicle starts to slide, turn downhill. This should help straighten out the vehicle and prevent the side slipping.

If the vehicle stalls on a hill:

1. Apply the brakes to stop the vehicle, and then apply the parking brake.
2. Shift into P (Park) and then restart the engine.
   - If driving uphill when the vehicle stalls, shift to R (Reverse), release the parking brake, and back straight down.
   - Never try to turn the vehicle around. If the hill is steep enough to stall the vehicle, it is steep enough to cause it to roll over.

NOT FOR RESALE

- If you cannot make it up the hill, back straight down the hill.
- Never back down a hill in N (Neutral) using only the brake. The vehicle can roll backward quickly and you could lose control.
- If driving downhill when the vehicle stalls, shift to a lower gear, release the parking brake, and drive straight down the hill.

3. If the vehicle cannot be restarted after stalling, set the parking brake, shift into P (Park), and turn the vehicle off.

Warning

Getting out of the vehicle on the downhill side when stopped across an incline is dangerous. If the vehicle rolls over, you could be crushed or killed. Always get out on the uphill side of the vehicle and stay well clear of the rollover path.

3.1 Leave the vehicle and seek help.

3.2 Stay clear of the path the vehicle would take if it rolled downhill.

Driving in Mud, Sand, Snow, or Ice

Warning

Driving on frozen lakes, ponds, or rivers can be dangerous. Ice conditions vary greatly and the vehicle could fall through the ice; you and your passengers could drown. Drive your vehicle on safe surfaces only.

Use a low gear when driving in mud — the deeper the mud, the lower the gear. Keep the vehicle moving to avoid getting stuck.

Traction changes when driving on sand. On loose sand, such as on beaches or sand dunes, the tires tend to sink into the sand. This affects steering, accelerating, and braking. Drive at a reduced speed and avoid sharp turns or abrupt maneuvers.

Traction is reduced on hard packed snow and ice and it is easy to lose control. Reduce vehicle speed when driving on hard packed snow and ice.

Driving in Water

Warning

Driving through rushing water can be dangerous. Deep water can sweep your vehicle downstream and you and your passengers could drown. If it is only shallow water, it can still wash away the ground from under your tires. Traction could be lost, and the vehicle could roll over. Do not drive through rushing water.

Caution

Do not drive through standing water if it is deep enough to cover the wheel hubs, axles, or exhaust pipe. Deep water can damage the axle and other vehicle parts.

If the standing water is not too deep, drive through it slowly. At faster speeds, water can get into the engine and cause it to stall. Stalling can occur if the exhaust pipe is under water. Do not turn off the ignition when driving through water. If the exhaust pipe is under water, the

NOT FOR RESALE

engine will not start. When going through water, the brakes get wet and it may take longer to stop. See *Driving on Wet Roads* ➪ *197*.

After Off-Road Driving

Be sure to switch out of Off-Road mode or Terrain mode on your Driver Mode Control to return to normal driving. Driving in Off-Road mode or Terrain mode on normal roads could be dangerous or damage the vehicle. See *Driver Mode Control* ➪ *224*.

Remove any brush or debris that has collected on the underbody or chassis, or under the hood. These accumulations can be a fire hazard.

After operation in mud or sand, have the brake linings cleaned and checked. These substances can cause glazing and uneven braking.
Check the body structure, driveline, steering, suspension, wheels, tires, and exhaust system for damage and check the fuel lines and cooling system for any leakage.

More frequent maintenance service is required. See the *Maintenance Schedule* ➪ *395*.

Driving on Wet Roads

⚠ Warning

Wet brakes can cause crashes. They might not work as well in a quick stop and could cause pulling to one side. You could lose control of the vehicle.

After driving through a large puddle of water or a car/vehicle wash, lightly apply the brake pedal until the brakes work normally.

Flowing or rushing water creates strong forces. Driving through flowing water could cause the vehicle to be carried away. If this happens, you and other vehicle occupants could drown. Do not ignore police warnings and be very cautious about trying to drive through flowing water.

Rain and wet roads can reduce traction and affect your ability to stop and accelerate. Always drive slower in these driving conditions and avoid driving through large puddles and deep-standing or flowing water.

Hydroplaning

⚠ Warning

Hydroplaning can cause a loss of steering ability, leading to a crash. Slow down and follow these other instructions to help avoid hydroplaning on wet roads.

Hydroplaning can occur on wet roads if water builds up under the tires, causing them to have little to no contact with the road.

Rainy Weather Tips

Besides slowing down, other wet weather driving tips include:

- Allow extra following distance.
- Pass with caution.
- Keep windshield wiping equipment in good condition.
- Fill the windshield washer fluid reservoir.
- Maintain proper tire pressure and tread depth. See *Tires* ➪ *345*.
- Turn off any cruise control system, if equipped. See *Adaptive Cruise Control (Advanced)* ➪ *231* or *Super Cruise* ➪ *255*.

NOT FOR RESALE

- Turn on the Traction Control System and StabiliTrak/Electronic Stability Control. See *Traction Control/Electronic Stability Control* ➪ *223*.

Hill and Mountain Roads

Driving on steep hills or through mountains is different than driving on flat or rolling terrain. Tips include:

- Keep the vehicle serviced and in good shape.
- Check all fluid levels, brakes, tires, cooling system, and transmission.
- Shift to a lower gear when going down steep or long hills.

⚠ Warning

Using the brakes to slow the vehicle on a long downhill slope can cause brake overheating, can reduce brake performance, and could result in a loss of braking. Shift the transmission to a lower gear to let the engine assist the brakes on a steep downhill slope.

⚠ Warning

Coasting downhill in N (Neutral) or with the ignition off is dangerous. This can cause overheating of the brakes and loss of steering assist. Always have the engine running and the vehicle in gear.

- Drive at speeds that keep the vehicle in its own lane. Do not swing wide or cross the center line.
- Be alert on top of hills; something could be in your lane (e.g., stalled car, crash).
- Pay attention to special road signs (e.g., falling rocks area, winding roads, long grades, passing or no-passing zones) and take appropriate action.

Winter Driving

Driving on Snow or Ice

Caution

To avoid damage to the wheels and brake components, always clear snow and ice from inside the wheels and underneath the vehicle before driving.

Snow or ice between the tires and the road causes less traction or grip, so drive carefully. Wet ice can occur at about 0 °C (32 °F) when freezing rain begins to fall. Avoid driving on wet ice or in freezing rain until the roads are treated.

For Slippery Road Driving:

- Accelerate gently. Accelerating too quickly causes the wheels to spin and makes the surface under the tires slick.
- Turn on the Traction Control System. See *Traction Control/Electronic Stability Control* ➪ *223*.
- Apply the brakes sooner than you would on dry pavement. The Antilock Brake System (ABS) improves vehicle stability during hard stops. See *Antilock Brake System (ABS)* ➪ *220*.
- Allow greater following distance and watch for slippery spots. Icy patches can occur on otherwise clear roads in shaded areas. The surface of a curve or an overpass can remain icy when the surrounding roads are clear. Avoid sudden steering maneuvers and braking while on ice.

NOT FOR RESALE

- Turn off any cruise control system, if equipped. See *Adaptive Cruise Control (Advanced)* ⇨ *231* or *Super Cruise* ⇨ *255*.

Cold Weather Mode

In very low temperatures, a cold weather message may display on the Driver Information Center. The engine speed, transmission shift patterns, and cabin fan speed may operate differently to enable the vehicle to warm up quicker. You can manually override the cabin fan speed in cold weather mode.

Blizzard Conditions

Stop the vehicle in a safe place and signal for help. Stay with the vehicle unless there is help nearby. If possible, use Roadside Assistance. See *Roadside Assistance Program* ⇨ *411*. To get help and keep everyone in the vehicle safe:

- Turn on the hazard warning flashers.
- Tie a red cloth to an outside mirror.

⚠ Warning

Snow can trap engine exhaust under the vehicle. This may cause exhaust gases to get inside. Engine exhaust contains carbon monoxide (CO), which cannot be seen or smelled. It can cause unconsciousness and even death.

If the vehicle is stuck in snow:

- Clear snow from the base of the vehicle, especially any blocking the exhaust pipe.
- Open a window about 5 cm (2 in) on the vehicle side that is away from the wind, to bring in fresh air.
- Fully open the air outlets on or under the instrument panel.
- Adjust the climate control system to circulate the air inside the vehicle and set the fan speed to the highest setting. See “Climate Control Systems.”

For more information about CO, see *Engine Exhaust* ⇨ *210*.

To save fuel, run the engine for short periods to warm the vehicle and then shut the engine off and partially close the window. Moving about to keep warm also helps.

If it takes time for help to arrive, when running the engine, push the accelerator pedal slightly so the engine runs faster than the idle speed. This keeps the battery charged to restart the vehicle and to signal for help with the headlights. Do this as little as possible, to save fuel.

If the Vehicle Is Stuck

⚠ Warning

If the vehicle's tires spin at high speed, they can explode, and you or others could be injured. The vehicle can overheat, causing an engine compartment fire or other damage. Spin the wheels as little as possible and avoid going above 56 km/h (35 mph).

Slowly and cautiously spin the wheels to free the vehicle when stuck in sand, mud, ice, or snow.

NOT FOR RESALE

The Traction Control System can often help to free a stuck vehicle. See *Traction Control/ Electronic Stability Control* ⇨ *223*. If traction control cannot free the vehicle, try the rocking technique described later.

Tire chains should not be used. Other types of traction devices may be used. See *Tire Chains and Other Traction Devices* ⇨ *363*.

Rocking the Vehicle to Get It Out

Turn the steering wheel left and right to clear the area around the front wheels. For four-wheel-drive vehicles, shift into Four-Wheel Drive High. Turn the Traction Control System off. Shift back and forth between R (Reverse) and a forward gear, spinning the wheels as little as possible. To prevent transmission wear, wait until the wheels stop spinning before shifting gears. Slowly spinning the wheels in the forward and reverse directions causes a rocking motion that could free the vehicle. If that does not get the vehicle out after a few tries, it might need to be towed out. See *Transporting a Disabled Vehicle* ⇨ *380*.

Vehicle Load Limits

It is very important to know how much weight the vehicle can carry. This weight is called the vehicle capacity weight and includes the weight of all occupants, cargo, and all nonfactory-installed options. Two labels on the vehicle may show how much weight it was designed to carry, the Tire and Loading Information label and the Certification/Tire label.

⚠ Warning

Do not load the vehicle any heavier than the Gross Vehicle Weight Rating (GVWR), or either the maximum front or rear Gross Axle Weight Rating (GAWR). This can cause systems to break and change the way the vehicle handles. This could cause loss of control and a crash. Overloading can also reduce stopping performance, damage the tires, and shorten the life of the vehicle.

Tire and Loading Information Label

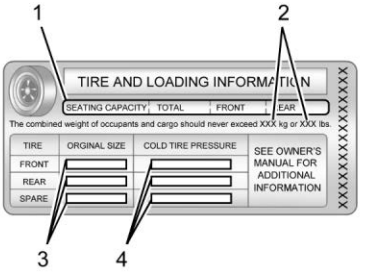

Label Example

A vehicle specific Tire and Loading Information label is attached to the center pillar (B-pillar). The tire and loading information label shows the number of occupant seating positions (1), and the maximum vehicle capacity weight (2) in kilograms and pounds.

The Tire and Loading Information label also shows the size of the original equipment tires (3) and the recommended

NOT FOR RESALE

cold tire inflation pressures (4). For more information on tires and inflation see *Tires* ➪ *345* and *Tire Pressure* ➪ *350*.

There is also important loading information on the vehicle Certification/Tire label. It may show the Gross Vehicle Weight Rating (GVWR) and the Gross Axle Weight Rating (GAWR) for the front and rear axles. See “Certification/Tire Label” later in this section.

Steps for Determining Correct Load Limit

1. Locate the statement "The combined weight of occupants and cargo should never exceed XXX kg or XXX lbs." on your vehicle’s placard.
2. Determine the combined weight of the driver and passengers that will be riding in your vehicle.
3. Subtract the combined weight of the driver and passengers from XXX kg or XXX lbs.
4. The resulting figure equals the available amount of cargo and luggage load capacity. For example, if the "XXX" amount equals 1400 lbs. and there will be five 150 lb passengers in your vehicle, the amount of available cargo and luggage load capacity is 650 lbs. (1400-750 (5 x 150) = 650 lbs.)
5. Determine the combined weight of luggage and cargo being loaded on the vehicle. That weight may not safely exceed the available cargo and luggage load capacity calculated in Step 4.
6. If your vehicle will be towing a trailer, load from your trailer will be transferred to your vehicle. Consult this manual to determine how this reduces the available cargo and luggage load capacity of your vehicle.

See *General Towing Information* ➪ *306* for important information on towing a trailer, towing safety rules, and trailering tips.

If aftermarket accessories are installed on the vehicle, for example a rooftop carrier, be sure to add the weight of all installed accessories to the combined weight of luggage and cargo.

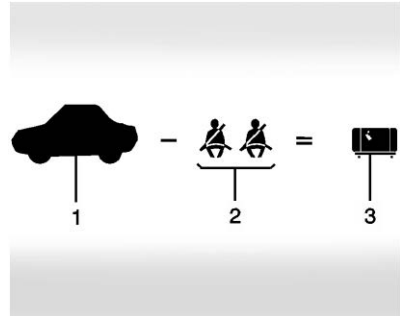

Example 1

1. Vehicle Capacity Weight for Example 1 = 453 kg (1,000 lb)

   Then subtract Accessory Weight, for example a rooftop cargo box = 15.8 kg (35 lb)
2. Subtract Occupant Weight @ 68 kg (150 lb) × 2 = 136 kg (300 lb)
3. Remaining available capacity for Cargo Weight = 301.2 kg (665 lb)

NOT FOR RESALE

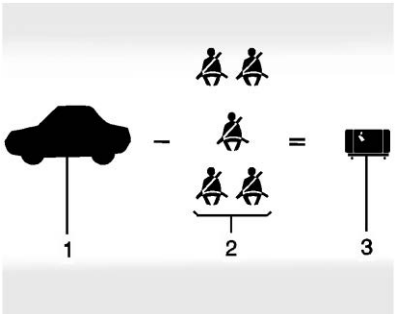

Example 2

1. Vehicle Capacity Weight for Example 2 = 453 kg (1,000 lb)

   Then subtract Accessory Weight, for example a rooftop cargo box = 18.1 kg (40 lb)
2. Subtract Occupant Weight @ 68 kg (150 lb) × 5 = 340 kg (750 lb)
3. Remaining available capacity for Cargo Weight = 94.9 kg (210 lb)

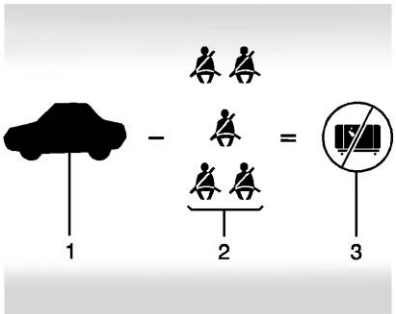

Example 3

1. Vehicle Capacity Weight for Example 3 = 453 kg (1,000 lb)
2. Subtract Occupant Weight @ 91 kg (200 lb) × 5 = 453 kg (1,000 lb)
3. Available Cargo Weight = 0 kg (0 lb)

Refer to the Tire and Loading Information label for specific information about the vehicle's capacity weight and seating positions. The combined weight of the driver, passengers, accessories, and cargo should never exceed the vehicle's capacity weight.

Certification/Tire Label

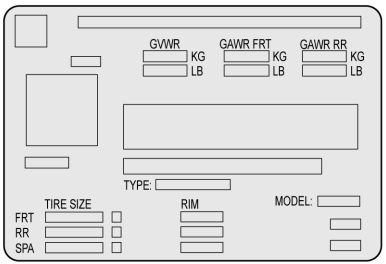

Label Example

A vehicle specific Certification/Tire label is attached to the B-pillar. The label may show the size of the vehicle's original tires and the inflation pressures needed to obtain the gross weight capacity of the vehicle. This is called Gross Vehicle Weight Rating (GVWR). The GVWR includes the weight of the vehicle, all occupants, fuel, and cargo.

The Certification/Tire label may also show the maximum weights for the front and rear axles, called Gross Axle Weight Rating

NOT FOR RESALE

(GAWR). To find out the actual loads on the front and rear axles, weigh the vehicle at a weigh station. Your dealer can help with this. Be sure to spread the load equally on both sides of the center line.

The warranty does not cover parts or components that fail because of overloading.

The label will help determine how much cargo and installed equipment the vehicle can carry.

Using heavier suspension components to get added durability might not change the weight ratings. Ask your dealer to help load the vehicle properly.

⚠ Warning

Things you put inside the vehicle can strike and injure people in a sudden stop or turn, or in a crash.

- Put things in the cargo area of the vehicle. Try to spread the weight evenly.

(Continued)

Warning (Continued)

- Never stack heavier things, like suitcases, inside the vehicle so that some of them are above the tops of the seats.
- Do not leave an unsecured child restraint in the vehicle.
- When you carry something inside the vehicle, secure it whenever you can.
- Do not leave a seat folded down unless you need to.

There is also important loading information for off-road driving in this manual. See “Loading the Vehicle for Off-Road Driving” under *Off-Road Driving* ⇨ *193*.

Add-On Equipment

Caution

Overloading the vehicle may cause damage. Repairs would not be covered by the vehicle warranty. Do not overload the vehicle.

There may be a limit on how many people can be inside the vehicle when carrying removable items. Be sure to weigh the vehicle before buying and installing the new equipment.

Remember not to exceed the Gross Axle Weight Rating (GAWR) of the front or rear axle.

NOT FOR RESALE

Starting and Operating

New Vehicle Break-In

Caution

During the first 800 km (500 mi) of driving this vehicle, overall performance will benefit by following these break-in period recommendations:

- Avoid full throttle starts and abrupt stops.
- Avoid exceeding the following engine speeds when accelerating or downshifting to slow or brake the vehicle:

  Gasoline engines: 4000 rpm

  Diesel engines: 3000 rpm
- Avoid making hard stops for the first 300 km (200 mi). Hard stops with new brake linings can result in premature wear and earlier replacement. Follow this guideline every time brake linings are replaced.

(Continued)

Caution (Continued)

- Do not tow a trailer. See *General Towing Information* ⇨ *306* for the trailer towing capabilities of the vehicle and more information.

After the break-in period, the engine speed and load can be gradually increased.

On new vehicles, the various mechanical and electrical systems adjust during the first 6,400 km (4,000 miles) of routine driving to provide optimal fuel economy and transmission shift performance.

Electrical systems will adapt and calibrate during the break-in period. A one-time occurrence of clicks and similar vehicle noises is normal during this process.

Normal driving charges the vehicle battery to achieve the best operation of the vehicle.

Ignition Positions

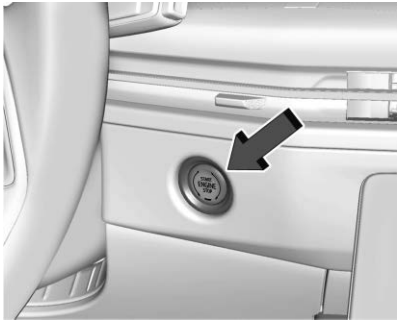

Vehicles equipped with Keyless Access have pushbutton starting.

The Remote Key must be in the vehicle for the system to operate. If the pushbutton start is not working, the vehicle may be near a strong radio antenna signal causing interference to the Keyless Access system. See *Remote Key Operation* ⇨ *9*.

To shift out of P (Park), the ignition must be on or in Service Mode, and the brake pedal must be applied.

NOT FOR RESALE

⚠ Warning

Turning off the vehicle while moving will cause loss of power assist in the brake and steering systems and disable the airbags. While driving, only shut the vehicle off in an emergency.

Stopping the Engine/LOCK/OFF (No Indicator Lights): When the vehicle is stopped, press ENGINE START/STOP once to turn the engine off.

If the vehicle is in P (Park), the ignition will turn off, and Retained Accessory Power (RAP) will remain active. See *Retained Accessory Power (RAP)* ⇨ *209*.

If the vehicle is not in P (Park), the ignition will return to ON/RUN mode and display the message SHIFT TO PARK in the Driver Information Center (DIC). When the vehicle is shifted into P (Park), the ignition will turn off.

The vehicle may have an electric steering column lock. The lock is activated when the ignition is turned off and either front door is opened. A sound may be heard as the lock actuates or releases. The steering column lock may not release with the wheels turned off center. If this happens, the vehicle may not start. Move the steering wheel from left to right while attempting to start the vehicle. If this does not work, the vehicle needs service.

If the vehicle must be shut off in an emergency:

1. Brake using a firm and steady pressure. Do not pump the brakes repeatedly. This may deplete power assist, requiring increased brake pedal force.
2. Shift the vehicle to N (Neutral). This can be done while the vehicle is moving. After shifting to N (Neutral), firmly apply the brakes and steer the vehicle to a safe location.
3. Come to a complete stop.
4. Hold the brake pedal down and shift to P (Park). The shift lever must be in P (Park) to turn the ignition off.
5. Continue to hold the brake pedal down.
6. Set the parking brake. See *Electric Parking Brake* ⇨ *220*.
7. Press ENGINE START/STOP once to turn the ignition off.
8. Release the brake pedal.

If the vehicle cannot be pulled over, and must be shut off while driving, press and hold ENGINE START/STOP for longer than two seconds, or press twice in five seconds.

Accessory Mode (Amber Indicator Light): This mode allows some electrical accessories to be used when the engine is off.

With the ignition off, pressing the button one time without the brake pedal applied will place the ignition system in accessory mode.

The ignition will switch from accessory mode to off after five minutes to prevent battery rundown.

ON/RUN/START (Green Indicator Light): This mode is for driving and starting. With the ignition off, and the brake pedal applied, pressing the button once will turn the ignition on. Once engine cranking begins, release the button. Engine cranking will continue until the engine starts. See *Starting the Engine* ⇨ *206*.

Service Mode

This power mode is available for service and diagnostics, and to verify the proper operation of the malfunction indicator light as may be required for emission inspection purposes. With the vehicle off, and the brake pedal not applied, pressing and holding the button for

NOT FOR RESALE

more than five seconds will place the vehicle in Service Mode. The instruments and audio systems will operate as they do when the ignition is on, but the vehicle will not be able to be driven. The engine will not start in Service Mode. Press the button again to turn the ignition off.

Starting the Engine

Caution
If you add electrical parts or accessories, you could change the way the engine operates. Any resulting damage would not be covered by the vehicle warranty. See *Add-On Electrical Equipment* ➪ *307*.

Shift the vehicle into P (Park) or N (Neutral). To restart the engine when the vehicle is already moving, use N (Neutral) only.

Caution
Do not try to shift to P (Park) if the vehicle is moving. If you do, you could damage the transmission. Shift to P (Park) only when the vehicle is stopped.

Starting Procedure

1. The remote key must be in the vehicle. Press ENGINE START/STOP with the brake pedal applied. When the engine begins cranking, let go of the button.

   The idle speed will go down as the engine gets warm. Do not race the engine immediately after starting it. Operate the engine and transmission gently to allow the oil to warm up and lubricate all moving parts.

   When the low fuel warning light is on and the FUEL LEVEL LOW message is displayed in the Driver Information Center (DIC), press the ENGINE START/STOP position to continue engine cranking.

Caution
Cranking the engine for long periods of time, by trying to start the engine immediately after cranking has ended, can overheat and damage the cranking motor, and drain the battery. Wait at least 15 seconds between each try, to let the cranking motor cool down.

2. If the engine does not start after 5 to 10 seconds, especially in very cold weather (below –18 °C or 0 °F), it could be flooded with too much gasoline. Try pushing the accelerator pedal all the way to the floor and holding it there while pressing ENGINE START/STOP for up to a maximum of 15 seconds. Wait at least 15 seconds between each try, to allow the cranking motor to cool down. When the engine starts, let go of the button and accelerator. If the vehicle starts briefly but then stops again, do the same thing. This clears the extra gasoline from the engine. Do not race the engine immediately after starting it. Operate the engine and transmission gently until the oil warms up and lubricates all moving parts.

Stop/Start System

If equipped and enabled, the Auto Stop/Start feature shuts off the engine when the vehicle is at a stop to help conserve fuel.

NOT FOR RESALE

⚠ Warning

The automatic engine Stop/Start feature causes the engine to shut off while the vehicle is still on. Do not exit the vehicle before shifting to P (Park). The vehicle may restart and move unexpectedly. Always shift to P (Park), and then turn the ignition off before exiting the vehicle.

When the brakes are applied and the vehicle is at a complete stop, the engine may turn off. When stopped, the tachometer displays AUTO STOP. When the brake pedal is released or the accelerator pedal is pressed, the engine will restart.

Auto Stop/Start Deactivation Switch

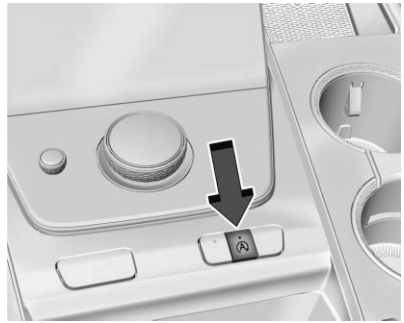

The Auto Stop/Start feature can be disabled and enabled by pressing Ⓐ. Stop/Start is enabled each time you start the vehicle.

When the Ⓐ indicator is illuminated, the system is enabled.

Auto Stop/Start Availability

Auto Stop/Start may or may not occur if:

- The climate control settings require the engine to be running to cool or heat the vehicle interior.
- The vehicle battery needs to charge.
- The vehicle battery was recently disconnected.
- Minimum vehicle speed has not been reached since the last Auto Stop.
- The accelerator pedal is pressed.
- The engine or transmission is not at the required operating temperature.
- The outside temperature is not in the required operating range.
- The vehicle is shifted out of D (Drive) to any gear other than P (Park).
- Certain driver modes have been selected. See *Driver Mode Control* ➪ *224* and *Four-Wheel Drive* ➪ *215*.
- The vehicle is on a steep hill or grade.
- The driver door is open or the driver seat belt is unbuckled.
- The hood is open.
- The Auto Stop has reached the maximum allowed time.

NOT FOR RESALE

Engine Heater

The engine heater can provide easier starting and better fuel economy during engine warm-up in cold weather conditions at or below −18 °C (0 °F). Vehicles with an engine heater should be plugged in at least four hours before starting.

⚠ Warning

Do not plug in the engine block heater while the vehicle is parked in a garage or under a carport. Property damage or personal injury may result. Always park the vehicle in a clear open area away from buildings or structures.

To Use the Engine Heater

⚠ Warning

Improper use of the heater cord or an extension cord can damage the cord and may result in overheating and fire.

(Continued)

Warning (Continued)

- Plug the cord into a three-prong electrical utility receptacle that is protected by a ground fault detection function. An ungrounded outlet could cause an electric shock.
- Use a weatherproof, heavy-duty, 15 amp-rated extension cord if needed. Failure to use the recommended extension cord in good operating condition, or using a damaged heater or extension cord, could make it overheat and cause a fire, property damage, electric shock, and injury.
- Do not operate the vehicle with the heater cord permanently attached to the vehicle. Possible heater cord and thermostat damage could occur.
- While in use, do not let the heater cord touch vehicle parts or sharp edges. Never close the hood on the heater cord.
- Before starting the vehicle, unplug the cord, reattach the cover to the plug, and securely fasten the cord. Keep the cord away from any moving parts.

1. Turn off the engine.
2. Check the heater cord for damage. If it is damaged, do not use it. See your dealer for a replacement. Inspect the cord for damage at each use.

3. Remove the engine heater connector cover by gently prying the small notch with a flat blade tool.

NOT FOR RESALE

4. Plug the heater cord into the connector in the front bumper.
5. Plug the cord into a grounded 110-volt AC outlet that is protected by a ground fault detection function.
6. Before starting the engine, be sure to unplug and store the cord.

The length of time the heater should remain plugged in depends on several factors. Ask a dealer in the area where you will be parking the vehicle for the best advice on this.

Retained Accessory Power (RAP)

When you turn off the vehicle, the following features (if equipped) will continue to function for up to 10 minutes, or until the driver door is opened. These features will also work when the vehicle is on or in accessory mode:

- Infotainment System
- Power Windows (during Retained Accessory Power this functionality will be lost when any door is opened)
- Sunroof (during Retained Accessory Power this functionality will be lost when any door is opened)
- Auxiliary Power Outlet (during Retained Accessory Power this functionality will be lost when any door is opened)
- Audio System
- OnStar System

Parking over Things That Burn

⚠ Warning

Things that can burn could touch hot exhaust parts under the vehicle and ignite. Do not park over papers, leaves, dry grass, or other things that can burn.

Dynamic Fuel Management

If equipped, Dynamic Fuel Management allows the engine to operate in multiple cylinder patterns, up to the full 8-cylinder operation, depending on driving conditions. When less power is required, such as cruising at a constant vehicle speed, the system will reduce any combination of operating cylinders enabling the vehicle to achieve better fuel economy. When greater power is required, such as passing or merging onto a freeway, the system will maintain full 8-cylinder operation.

Extended Parking

It is best not to park with the vehicle running. If the vehicle is left running, be sure it will not move and there is adequate ventilation.

NOT FOR RESALE

See *Automatic Transmission* ⇨ *210* and *Engine Exhaust* ⇨ *210*.

If the vehicle is left parked and running with the remote key outside the vehicle, it will continue to run for up to 15 minutes.

If the vehicle is left parked and running with the remote key inside the vehicle, it will continue to run for up to 30 minutes.

The vehicle could turn off sooner if it is parked on a hill, due to lack of available fuel.

The timer will reset if the vehicle is taken out of P (Park) while it is running.

Engine Exhaust

⚠ Warning

Engine exhaust contains carbon monoxide (CO), which cannot be seen or smelled. Exposure to CO can cause unconsciousness and even death.

Exhaust may enter the vehicle if:

(Continued)

Warning (Continued)

- The vehicle idles in areas with poor ventilation (parking garages, tunnels, deep snow that may block underbody airflow or tail pipes).
- The exhaust smells or sounds strange or different.
- The exhaust system leaks due to corrosion or damage.
- The vehicle exhaust system has been modified, damaged, or improperly repaired.
- There are holes or openings in the vehicle body from damage or aftermarket modifications that are not completely sealed.

If unusual fumes are detected or if it is suspected that exhaust is coming into the vehicle:

- Drive it only with the windows completely down.
- Have the vehicle repaired immediately.

(Continued)

Warning (Continued)

Never park the vehicle with the engine running in an enclosed area such as a garage or a building that has no fresh air ventilation.

Running the Vehicle While Parked

It is better not to park with the engine running.

If the vehicle is left with the engine running, follow the proper steps to be sure the vehicle will not move. See *Automatic Transmission* ⇨ *210* and *Engine Exhaust* ⇨ *210*.

If parking on a hill and pulling a trailer, see *General Towing Information* ⇨ *306*.

Automatic Transmission

NOT FOR RESALE

Automatic Transmission Shift Pattern

- The shift pattern is displayed on the front of the shift lever.
- The selected gear position will illuminate red, while others are displayed in white.
- In frigid conditions, the indicator may blink until fully engaged.

Shifter Positions

P (Park): Use this position when starting the vehicle to ensure the vehicle does not move. This position locks the drive wheels.

R (Reverse): Use this gear position to back up.

N (Neutral): In this gear position, the engine does not connect with the wheels. To restart the engine when the vehicle is already moving, use N (Neutral) only.

D (Drive): Use this gear position for normal driving.

L or M (V-Series only): This gear position provides additional coast braking for downhill driving, trailer towing, or hauling a heavy load. See *Manual Mode (Non V-Series)* ⇨ *214 Manual Mode (V-Series Only)* ⇨ *214*.

Shifting Into Gear Positions

1. Ensure the engine is running.
2. Apply the brake pedal.
3. Move the shift lever to the desired position.

   After releasing the shift lever, it will return to the center position.

   The P indicator will turn white and the selected gear indicator on the shift lever will turn red when the vehicle is no longer in P (Park).

If you cannot shift out of P (Park), check the Driver Information Center for an issue message. If you have followed Steps 1–3 as directed and your vehicle will still not shift out of P (Park), see your dealer for service.

Shifting Into Park

⚠ Warning

Parking on grades with poor traction such as ice, snow, mud, or gravel may cause the vehicle to unintentionally move and could result in injury, death, and/or vehicle damage. If equipped with four-wheel drive, use AUTO or 4 (High) to provide additional traction. Be sure to apply the parking brake. See *Electric Parking Brake* ⇨ *220* and *Four-Wheel Drive* ⇨ *215*.

⚠ Warning

If equipped with four-wheel drive, the vehicle will be free to roll if the transfer case is in N (Neutral), even when the shift lever is in P (Park). You or someone else could be seriously injured. Be sure the transfer case is in a drive gear — 2↑, 4↑, or 4↓ — or set the parking brake before placing the transfer case in N (Neutral). See *Four-Wheel Drive* ⇨ *215*.

1. Apply the brake pedal and set the parking brake. See *Electric Parking Brake* ⇨ *220*.
2. Press the P (Park) switch at the end of the shift lever.
3. When the vehicle is stopped, press ENGINE START/STOP to turn off the vehicle. The vehicle will shift to P (Park) automatically unless the vehicle is in N (Neutral), see “Car Wash Mode” later in this section.
4. The P indicator on the shift lever will turn red when the vehicle is in P (Park).

If the vehicle is shifted into P (Park) on a hill, the parking brake may apply automatically. The driver may not be able to release the

NOT FOR RESALE

parking brake using the parking brake switch. It should automatically release when the vehicle is shifted out of P (Park).

Leaving the Vehicle with the Engine Running

⚠ Warning

It can be dangerous to leave the vehicle with the engine running. It could overheat and catch fire.

It is dangerous to get out of the vehicle if the vehicle is not in P (Park) with the parking brake firmly set. The vehicle can roll.

Do not leave the vehicle when the engine is running. If you have left the engine running, the vehicle can move suddenly. You or others could be injured. To be sure the vehicle will not move, even when you are on fairly level ground, always set the parking brake and shift to P (Park).

If you must leave the vehicle with the engine running, be sure the vehicle is in P (Park) and the parking brake is set. After pressing the P (Park) switch, hold the regular brake pedal down. If you cannot see the P (Park) indicator in the instrument cluster, it means that the vehicle has not shifted to P (Park). Repeat the process until the vehicle is safely shifted into P (Park).

Service Shift Lever Message

A SERVICE SHIFTER SEE OWNER'S MANUAL message indicates an issue with the shift lever. If this message is a result of the vehicle automatically shifting into P (Park) and you need to move your vehicle to a safe location, try holding the shift lever in D (Drive) or R (Reverse) until the speed exceeds 16 km/h (10 mph). Have the vehicle serviced as soon as possible.

R (Reverse):

To shift into R (Reverse):

1. Bring the vehicle to a complete stop.
2. From the center position, move the shift lever rearward toward you, and then up.

If the vehicle is shifted from either R (Reverse) to D (Drive) or L (Low), or D (Drive) or L (Low) to R (Reverse) while at a high speed, the vehicle may shift to N (Neutral). Decelerate and try the shift again.

At low vehicle speeds, R (Reverse) can be used to rock the vehicle back and forth to get out of snow, ice, or sand without damaging the transmission. See *If the Vehicle Is Stuck* ⇨ *199*.

D (Drive):

Caution

A transmission hot message may display if the automatic transmission fluid is too hot. Driving under this condition can damage the vehicle. Stop and idle the engine to cool the automatic transmission fluid. This message clears when the transmission fluid has cooled sufficiently.

Caution

Spinning the tires or holding the vehicle in one place on a hill using only the accelerator pedal may damage the transmission. The repair will not be covered by the vehicle warranty. If the vehicle is stuck, do not spin the tires. When stopping on a hill, use the brakes to hold the vehicle in place.

To shift into D (Drive):

1. Ensure the vehicle is at a complete stop.
2. From the center position, move the shift lever rearward and then down.

N (Neutral):

NOT FOR RESALE

Caution
The vehicle is not designed to stay in N (Neutral) for extended periods of time. It will automatically shift into P (Park).

To shift into N (Neutral), move the shift lever rearward. If the vehicle is in P (Park), apply the brake pedal while moving the shift lever rearward.

If you press ENGINE START/STOP twice while at high speed, the engine will turn off and the transmission will automatically shift to N (Neutral). Once the vehicle is stopped, shift to P (Park) and the vehicle will turn off.

Car Wash Mode

The Car Wash mode allows the vehicle to remain in N (Neutral) for use in automatic car washes. Do not use Car Wash mode for vehicle towing. If the vehicle needs to be towed, see *Transporting a Disabled Vehicle* ⇨ *380*.

Car Wash Mode (Engine Off – Driver In Vehicle)

To place the vehicle in N (Neutral) with the engine off and vehicle occupied:

1. Drive to the car wash entrance.
2. Apply the brake pedal.
3. Shift to N (Neutral).
4. Turn off the engine and release the brake pedal.
5. The indicator should continue to show N. If it does not, repeat Steps 2–4.

Car Wash Mode (Engine Off – Driver Out of Vehicle)

To place the vehicle in N (Neutral) with the engine off and vehicle unoccupied:

1. Drive to the car wash entrance.
2. Apply the brake pedal.
3. Open the door.
4. Shift to N (Neutral).
5. Turn off the engine and release the brake pedal.
6. The indicator should continue to show N. If it does not, repeat Steps 2–5.
7. Exit the vehicle and close the door.

Car Wash Mode (Engine On – Driver In Vehicle)

To place the vehicle in N (Neutral) with the engine on and vehicle occupied:

1. Drive to the car wash entrance.
2. Apply the brake pedal.
3. Shift to N (Neutral).
4. Release the brake pedal.

Car Wash Mode (Engine On – Driver Out of Vehicle)

To place the vehicle in N (Neutral) with the engine on and vehicle unoccupied:

1. Drive to the car wash entrance.
2. Apply the brake pedal.
3. Open the door.
4. Shift to N (Neutral), then release the brake pedal.
5. The indicator should continue to show N. If it does not, repeat Steps 2–4.
6. Exit the vehicle and close the door.
7. The vehicle may automatically shift into P (Park) upon reentry.

NOT FOR RESALE

Manual Mode (Non V-Series)

Electronic Range Select

Caution
Driving with the engine at a high rpm without upshifting while using Manual Mode, could damage the vehicle. Always upshift when necessary while using Manual Mode.

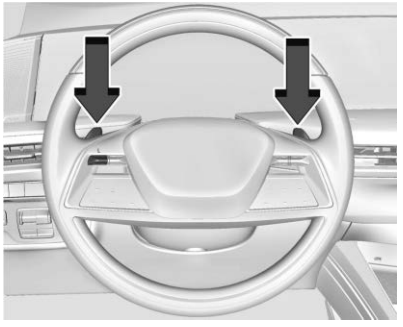

Electronic Range Select allows for the selection of the range of gear positions. Use this mode when driving downhill or towing a trailer to limit the top gear and vehicle speed.

The shift position indicator within the Driver Information Center will display a number next to the L indicating the highest available gear.

To enter Electronic Range Select:

1. With the vehicle in D (Drive), press the L (Low) button on the steering wheel or move the shift lever rearward and then down. The L in the instrument cluster will be highlighted and the D in the instrument cluster will be unhighlighted.
2. Pull the left paddle towards you to reduce the highest gear available, or the right paddle to increase the highest gear available.
3. To exit L (Low) and shift into D (Drive), move the shift lever rearward and then down or press the L (Low) button. The D in the instrument cluster will be highlighted and the L in the instrument cluster will be unhighlighted.

When shifting to L (Low), the transmission will shift to a preset lower gear range. For this preset range, the highest gear available will be displayed next to the L in the Driver Information Center. See *Driver Information Center (DIC)* ⇨ *132*. All gears below that number are available to use. For example, when 4 (Fourth) is shown next to the L, 1 (First) through 4 (Fourth) gears are shifted automatically. To shift to 5 (Fifth) gear, pull the right steering wheel control or shift into D (Drive).

L (Low) will prevent shifting to a lower gear range if the engine speed is too high. If the vehicle speed is not reduced within the time allowed, the lower gear range shift will not be completed. Slow the vehicle, then pull the left paddle to the desired lower gear range.

Cruise control can be used while in Electronic Range Select.

Manual Mode (V-Series Only)

Tap Shift

Caution
Driving with the engine at a high rpm without upshifting while using Manual Mode, could damage the vehicle. Always upshift when necessary while using Manual Mode.

NOT FOR RESALE

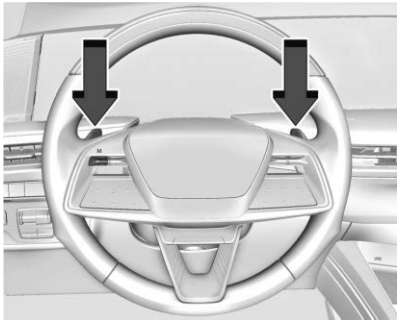

While using Manual Mode, the vehicle will have firmer, quicker shifting. This can be used for sport driving or when climbing or descending hills, to stay in gear longer, or to downshift for more power or engine braking.

The transmission will only allow shifting into gears appropriate for the vehicle speed and engine revolutions per minute (rpm). If shifting is prevented for any reason, the M or D will flash in the instrument cluster. The transmission will not automatically shift to the next higher gear if the engine rpm is too high. It will only automatically shift to the next lower gear if the engine rpm is much too low.

Permanent Manual Mode

To enter Permanent Manual Mode:

1. With the vehicle in D (Drive), press the M (Manual Mode) button or move the shift lever rearward and then down.

   While in Permanent Manual Mode, the D in the instrument cluster will be unhighlighted and the M will be highlighted with current gear shown.

2. Pull left paddle to downshift and the right paddle to upshift. To shift to the lowest available gear, pull and hold the left paddle.
3. To exit Permanent Manual Mode, move the shift lever to the desired position or press the M (Manual Mode) button.

Temporary Manual Mode

To enter Temporary Manual Mode:

1. With the transmission in D (Drive) and not in Permanent Manual Mode, the paddles will activate a temporary Manual Mode, allowing the transmission to be manually shifted.
2. To shift to the lowest available gear, pull and hold the left paddle.
3. To deactivate, hold the right paddle briefly. Automatic shifts return after no manual shifts have been done for 7 to 10 seconds.

Drive Systems

Four-Wheel Drive

Four-Wheel Drive (V-Series)

Vehicles with this feature always send engine power to all four wheels. It is fully automatic, and adjusts itself as needed for road conditions.

Four-Wheel Drive (Except V-Series)

If equipped, four-wheel drive engages the front axle for extra traction.

Caution

Do not drive on clean, dry pavement in 4↑ or 4↓ for an extended period of time. These conditions may cause:

- Overheating.
- Oil leakage.
- Damage to internal and external components of the front axle.

(Continued)

NOT FOR RESALE

Caution (Continued)

- Premature wear on the vehicle's powertrain.
- Additional driveline noise.

Driving on clean, dry pavement in 4↑ or 4↓ may:

- Cause a vibration to be felt in the steering system.
- Cause tires to wear faster.

⚠ Warning

If equipped with four-wheel drive, the vehicle will be free to roll if the transfer case is in N (Neutral), even when the shift lever is in P (Park). You or someone else could be seriously injured. Be sure the transfer case is in a drive gear — 2↑, 4↑, or 4↓ — or set the parking brake before placing the transfer case in N (Neutral). See *Automatic Transmission* ➪ *210*.

Caution

Extended high-speed operation in 4↑ or 4↓ may damage or shorten the life of the drivetrain. For extended high-speed operation, AUTO is recommended.

An engagement noise and bump is normal when shifting between 4↓ and 4↑ or N (Neutral), with the engine running.

Shifting into 4↓ will turn Traction Control and StabiliTrak/Electronic Stability Control (ESC) off. See *Traction Control/Electronic Stability Control* ➪ *223*.

Automatic Transfer Case

Two-Speed Transfer Case

If equipped, the transfer case controls are used to shift into and out of four-wheel drive.

To shift the transfer case, press the desired button. The graphic in the instrument cluster will flash while a shift is in progress. The graphic displayed will change to indicate the setting requested.

When the shift is complete the graphic will stop flashing. The DIC message turns off once the shift is complete. If the transfer case cannot complete a shift request, it will go back to its last chosen setting.

NOT FOR RESALE

The settings are:

N (Neutral): Use only when the vehicle needs to be towed. See *Recreational Vehicle Towing* ➪ *381* and *Transporting a Disabled Vehicle* ➪ *380*.

2↑ (Two-Wheel Drive High): Use for driving on most streets and highways. The front axle is not engaged. This setting provides the best fuel economy.

AUTO (Automatic Four-Wheel Drive): Use when road surface conditions are variable. When driving in AUTO, the front axle is engaged, and the vehicle's power is sent to the front and rear wheels automatically based on driving conditions. This setting provides slightly lower fuel economy than 2↑.

4↑ (Four-Wheel Drive High): Use this position when extra traction is needed, such as when driving on snowy or icy roads, when off-roading, or when plowing snow.

4↓ (Four-Wheel Drive Low): This setting engages the front axle and delivers extra torque. Choose 4↓ when driving off-road in deep sand, deep mud, or deep snow, and while climbing or descending steep hills. While driving in 4↓, keep vehicle speed below 72 km/h (45 mph).

Shifting into 4↓ will turn Traction Control and StabiliTrak/ESC off. See *Traction Control/ Electronic Stability Control* ➪ *223*.

Shifts between 2↑, 4↑, and AUTO

Any of these shifts can be made at normal driving speed.

The actual 4x4 shift request is only made after the button is released. The 4x4 graphic will remain flashing until the shift request has completed. A DIC message displays to indicate that the 4x4 transfer case has been requested to shift to the new desired state.

Once the 4x4 shift has completed, the DIC message disappears, the 4x4 graphic stops flashing, and the current setting is indicated.

When a shift to 2↑ is completed successfully while in P (Park), the parking brake will engage. To resume driving, shift the transmission to the desired gear and manually release the parking bake or press the accelerator pedal to begin driving. See *Electric Parking Brake* ➪ *220*.

If equipped, use 4↓, AUTO, or 4↑ to provide additional traction when parking on a steep grade with poor traction such as ice, snow, mud, or gravel.

Shifting Into 4↓

1. The ignition must be on and the vehicle must be stopped or moving less than 5 km/h (3 mph) with the transmission in N (Neutral). It is best for the vehicle to be moving 1.6 to 3.2 km/h (1 to 2 mph).
2. Press 4↓. The actual 4x4 shift request is only made after the button is released. The 4x4 graphic will remain flashing until the shift request has completed. A DIC message displays to indicate that the 4x4 transfer case has been requested to shift to the new desired state.

   Once the 4x4 shift has completed, the DIC message disappears, the 4x4 graphic stops flashing and the current setting is indicated.

If vehicle speed is higher when shift request occurs, a DIC message displays. Reduce vehicle speed.

If the transmission is not in N (Neutral) when shift request occurs, a DIC message displays. The vehicle will allow 20 seconds for the shift to occur. After this time, a graphic in the instrument cluster will indicate that the transfer case is in 4↓.

NOT FOR RESALE

Caution

Shifting the transmission into gear before the requested mode indicator light has stopped flashing could damage the transfer case.

If the transmission is not shifted into N (Neutral) or the vehicle has not slowed to 5 km/h (3 mph) within 20 seconds, the transfer case will remain in its original state. This will be indicated in the instrument cluster.

With the vehicle moving less than 5 km/h (3 mph) and the transmission in N (Neutral), attempt the shift again.

Shifting Out of 4↓

1. The vehicle must be stopped or moving less than 5 km/h (3 mph) with the transmission in N (Neutral) and the ignition on. It is best for the vehicle to be moving 1.6 to 3.2 km/h (1 to 2 mph).
2. Press 4↑, AUTO, or 2↑. The actual 4x4 shift request is only made after the button is released. The 4x4 graphic will remain flashing until the shift request has completed. A DIC message displays to indicate the state of the request.

   Once the 4x4 shift has completed, the DIC message disappears, the 4x4 graphic stops flashing, and the current setting is indicated.

   If vehicle speed is higher when shift request occurs, a DIC message displays. Reduce vehicle speed.

If the transmission is not in N (Neutral) when the shift request occurs, DIC messages will display. The vehicle will allow 20 seconds for this shift to occur. After this time, a graphic in the instrument cluster will indicate that the transfer case is in 4↓.

Caution

Shifting the transmission into gear before the requested mode indicator light has stopped flashing could damage the transfer case.

If the transmission is not shifted into N (Neutral) or the vehicle has not slowed to 5 km/h (3 mph) within 20 seconds, the transfer case will remain in its original state. This will be indicated in the instrument cluster.

With the vehicle moving less than 5 km/h (3 mph), and the transmission in N (Neutral), attempt the shift again.

Shifting Into N (Neutral)

To shift into N (Neutral):

1. Turn the vehicle on.
2. Shift the transmission to N (Neutral).
3. Shift the transfer case to 2↑.
4. Apply the parking brake and/or brake pedal.
5. Press 2↑ five times in 10 seconds until the N (Neutral) symbol starts flashing in the instrument cluster. When the shift is complete, the graphic stops flashing. If the parking brake and/or brake pedal is not applied within 20 seconds, the transfer case will remain in the original state.
6. If the transmission is not shifted into N (Neutral) or the vehicle has not slowed to 5 km/h (3 mph) within 20 seconds, the

NOT FOR RESALE

transfer case will remain in its original state. This will be indicated in the instrument cluster.

Shifting Out of N (Neutral)

To shift out of N (Neutral):

1. Turn the vehicle on.
2. Set the parking brake. See *Electric Parking Brake* ⇨ *220*.
3. Shift the transmission to N (Neutral).
4. Shift the transfer case to 2↑. Transfer case shifts out of N (Neutral) can only be made into 2↑. When the shift to 2↑ is complete, the graphic in the instrument cluster will stop flashing. If the transfer case cannot complete a shift, the graphic will return to the previously selected setting.

Single Speed Transfer Case

If equipped, the transfer case controls are used to shift into and out of four-wheel drive.

To shift the transfer case, press the desired button. The graphic in the instrument cluster will flash while a shift is in progress. The graphic displayed will change to indicate the setting requested.

When the shift is complete the graphic will stop flashing. The DIC message turns off once the shift is complete. If the transfer case cannot complete a shift request, it will go back to its last chosen setting.

The settings are:

2↑ (Two-Wheel Drive High): Use for driving on most streets and highways. The front axle is not engaged. This setting provides the best fuel economy.

4↑ (Four-Wheel Drive High): Use this setting when extra traction is needed, such as when driving on snowy or icy roads, when off-roading, or when plowing snow.

AUTO (Automatic Four-Wheel Drive)

Use when road surface conditions are variable. When driving in AUTO, the front axle is engaged, and the vehicle's power is sent to the front and rear wheels automatically based on driving conditions. This setting provides slightly lower fuel economy than 2↑.

Shifts between 2↑, 4↑, and AUTO

Any of these shifts can be made at normal driving speed.

The actual 4x4 shift request is only made after the button is released. The 4x4 graphic will remain flashing until the shift request has completed. A DIC message displays.

Once the 4x4 shift has completed, the DIC message disappears, the 4x4 graphic stops flashing, and the current setting is indicated.

NOT FOR RESALE

The actual 4x4 shift request is only made after the button is released. The 4x4 graphic will remain flashing until the shift request has completed.

A DIC message displays. Once the 4x4 shift has completed, the DIC message disappears, the 4x4 graphic stops flashing, and the current setting is indicated.

Brakes

Electric Brake Boost

Vehicles equipped with electric brake boost have hydraulic brake circuits that are electronically controlled when the brake pedal is applied during normal operation. The system performs routine tests and turns off within a few minutes after the vehicle is turned off. Noise may be heard during this time. If the brake pedal is pressed during the tests or when the electric brake boost system is off, a noticeable change in pedal force and travel may be felt. This is normal.

Antilock Brake System (ABS)

The Antilock Brake System helps to prevent skidding and maintain steering control during hard braking.

If there is a problem, the Antilock Brake System warning light stays on. See *Brake System Warning Light* ➪ *123*.

Using Antilock Brakes

Do not pump the brakes. Just hold the brake pedal down firmly. It is normal to hear and feel the Antilock Brake System operating.

Braking in Emergencies

The Antilock Brake System does not always decrease stopping distance. If a vehicle suddenly slows or stops, there may not be enough time to apply the brakes. Always allow enough following distance between your vehicle and the vehicle ahead.

The Antilock Brake System allows you to steer and brake at the same time. In many emergencies, steering to make an evasive maneuver can be more effective than braking.

Electric Parking Brake

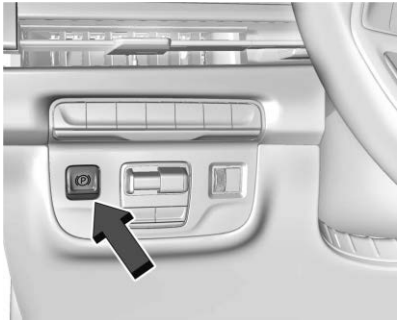

The Electric Parking Brake can always be applied, even if the vehicle is off. If there is not enough electrical power, the Electric Parking Brake cannot be applied or released. To prevent draining the battery, avoid unnecessary repeated cycles of the Electric Parking Brake.

The system has a red Electric Parking Brake status light and an amber service Electric Parking Brake warning light. See *Electric Parking Brake Light* ➪ *124* and *Service Electric Parking Brake Light* ➪ *124*. There are also parking brake-related Driver Information Center messages.

NOT FOR RESALE

Before leaving the vehicle, check the red Electric Parking Brake status light to ensure that the Electric Parking Brake is applied.

If a message displays on the Driver Information Center indicating the transmission is unable to shift soon, the service electric parking brake is on, and the Electric Parking Brake light flashes at the same time, the system must be reset. Start the vehicle, apply the Electric Parking Brake, and then release it. The message and the light should turn off. See *Electric Parking Brake Light* ⇨ *124* and *Service Electric Parking Brake Light* ⇨ *124*.

Electric Parking Brake Apply

Caution
Driving with the parking brake on can overheat the brake system and cause premature wear or damage to brake system parts. Make sure that the parking brake is fully released and the brake warning light is off before driving.

To apply the Electric Parking Brake:

1. Be sure the vehicle is at a complete stop.
2. Press the Electric Parking Brake switch.

The red Electric Parking Brake status light will flash and then stay on once the Electric Parking Brake is fully applied. If the red Electric Parking Brake status light flashes continuously, then the Electric Parking Brake is only partially applied or there is a problem with the Electric Parking Brake. A Driver Information Center message will display. Release the Electric Parking Brake and try to apply it again. If the light does not come on, or keeps flashing, have the vehicle serviced. Do not drive the vehicle if the red Electric Parking Brake light is flashing. See your dealer.

If the amber service Electric Parking Brake warning light is on, press the Electric Parking Brake switch. Continue to hold the switch until the red Electric Parking Brake status light remains on. If the amber service Electric Parking Brake warning light is on, see your dealer.

If the Electric Parking Brake is applied while the vehicle is moving, the vehicle will decelerate as long as the switch is pressed. If the switch is pressed until the vehicle comes to a stop, the Electric Parking Brake will remain applied.

The vehicle may automatically apply the Electric Parking Brake in some situations when the vehicle is not moving. This is normal, and is done to periodically check the correct operation of the Electric Parking Brake system, or as required by other safety functions that utilize the Electric Parking Brake.

If the Electric Parking Brake fails to apply, block the rear wheels to prevent vehicle movement.

Electric Parking Brake Release

To release the Electric Parking Brake:

1. Turn the vehicle on.
2. Apply and hold the brake pedal.
3. Press the Electric Parking Brake switch momentarily.

The Electric Parking Brake is released when the red Electric Parking Brake status light is off.

If the amber service Electric Parking Brake warning light is on, release the Electric Parking Brake by pressing and holding the Electric Parking Brake switch. Continue to hold the switch until the red Electric Parking Brake status light is off. If either light stays on after release is attempted, see your dealer.

Automatic Electric Parking Brake Release

The Electric Parking Brake automatically releases if the vehicle is running, placed into gear, and an attempt is made to drive. Avoid

NOT FOR RESALE

rapid acceleration when the Electric Parking Brake is applied to preserve parking brake lining life.

Brake Assist

Brake Assist detects rapid brake pedal applications due to emergency braking situations. It also provides additional braking to activate the Antilock Brake System if the brake pedal is not applied hard enough to activate it normally. Minor noise, brake pedal pulsation, and/or pedal movement during this time may occur. Continue to apply the brake pedal as the driving situation dictates. Brake Assist disengages when the brake pedal is released.

Post-Collision Braking (Secondary Collision Mitigation Braking)

This vehicle has a post-collision braking feature that may automatically engage to help slow your vehicle down after a crash. The feature may be disengaged by fully pressing the brake or accelerator pedal.

Hill Start Assist (HSA)

⚠ Warning

Do not rely on the HSA feature. HSA does not replace the need to pay attention and drive safely. You may not hear or feel alerts or warnings provided by this system. Failure to use proper care when driving may result in injury, death, or vehicle damage. See *Defensive Driving* ➪ *191*.

When the vehicle is stopped on a grade, Hill Start Assist prevents the vehicle from rolling in an unintended direction during the transition from brake pedal release to accelerator pedal apply. The brakes release when the accelerator pedal is applied. If the accelerator pedal is not applied within a few minutes, the Electric Parking Brake will apply. The brakes may also release under other conditions. Do not rely on Hill Start Assist to hold the vehicle.

Hill Start Assist is available when the vehicle is facing uphill in a forward gear, or when facing downhill in R (Reverse). The vehicle must come to a complete stop on a grade for Hill Start Assist to activate.

Automatic Vehicle Hold (AVH)

⚠ Warning

Do not rely on this feature. It does not replace the need to pay attention and drive safely. You may not hear or feel alerts or warnings provided by this system. Failure to use proper care when driving may result in injury, death, or vehicle damage.

When Automatic Vehicle Hold is turned on and the vehicle is braked to a stop, the feature prevents the vehicle from moving during the transition from brake pedal release to accelerator pedal apply. The brakes

NOT FOR RESALE

release when the accelerator pedal is applied. The brakes may also release under other conditions. Do not rely on Automatic Vehicle Hold to hold the vehicle.

If the accelerator pedal is not applied within a few minutes, the Electric Parking Brake is applied. The parking brake will also apply if the driver door is opened or the driver seat belt is unfastened while Automatic Vehicle Hold is holding the vehicle.

Automatic Vehicle Hold can be turned on by pressing AUTO HOLD. The Automatic Vehicle Hold light on the instrument panel will come on. The Automatic Vehicle Hold light is lit green while Automatic Vehicle Hold is actively holding the vehicle. See *Automatic Vehicle Hold (AVH) Light* ➪ *125*.

Ride Control Systems

Traction Control/Electronic Stability Control

This vehicle has a Traction Control System and a StabiliTrak/Electronic Stability Control system. These systems help limit wheel spin and assist the driver in maintaining control, especially on slippery road conditions. Both systems turn on automatically when the vehicle is started and begins to move.

The Traction Control System activates if any of the drive wheels are spinning and beginning to lose traction. If this happens, the traction system reduces power and applies the brakes to limit wheel spin.

The StabiliTrak/Electronic Stability Control system activates when the vehicle senses a difference between the intended path and the direction the vehicle is actually traveling. The stability control system selectively applies braking pressure to any one of the vehicle wheel brakes to assist the driver in keeping the vehicle on the intended path.

The systems may be heard or felt while they are operating or while performing diagnostic checks. This is normal and does not mean there is a problem with the vehicle.

It is recommended to leave both systems on for normal driving conditions, but it may be necessary to turn the Traction Control System off if the vehicle gets stuck in sand, mud, ice, or snow. See *If the Vehicle Is Stuck* ➪ *199* and "Turning the Systems Off and On" later in this section.

If equipped, Trailer Sway Control turns on automatically when the vehicle is started. See *General Towing Information* ➪ *306*.

Cruise control will disengage if the traction or stability control system begins to limit wheel spin. Cruise control may be turned back on when road conditions allow.

When the vehicle, if equipped, is in Four-Wheel Drive Low, the Traction Control System and StabiliTrak/Electronic Stability Control system are automatically disabled, OFF turns on, and the appropriate message will appear on the Driver Information Center.

The indicator light for both systems is in the instrument cluster. This light will:

- Flash when the Traction Control System is limiting wheel spin.
- Flash when the StabiliTrak/Electronic Stability Control system is activated.

NOT FOR RESALE

- Turn on and stay on when either system is not working.

See *Traction Control System (TCS)/Electronic Stability Control Light* ⇨ *127*.

If either system fails to turn on or to activate, a message displays in the Driver Information Center. The vehicle is safe to drive, but adjust driving accordingly.

If turns on and stays on:

1. Stop the vehicle.
2. Turn the vehicle off and wait 15 seconds.
3. Start the vehicle.
4. Drive the vehicle.

If stays on, the vehicle may need more time to diagnose the problem. If the condition persists, see your dealer.

Turning the Systems Off and On

Caution
Do not repeatedly brake or accelerate heavily when the Traction Control System is off. The vehicle driveline could be damaged.

To turn the Traction Control System on and off, on the infotainment home screen, select Controls > Drive > Traction Control. To turn StabiliTrak/Electronic Stability Control system on or off, select > next to the Traction Control menu. The following options appear:

- Traction Control Off
- StabiliTrak/ESC Off and Traction Control Off
- StabiliTrak/ESC On and Traction Control On

The Traction Off light displays in the instrument cluster when the Traction Control System is turned off. When the Traction Control System is turned back on, the Traction Off light displayed in the instrument cluster will turn off. See *Traction Off Light* ⇨ *127*.

If the traction system is actively limiting wheel spin when disabled, the system will not turn off until the wheels stop spinning.

To turn the StabiliTrak/Electronic Stability Control system off, select > next to the Traction Control menu. Select the StabiliTrak/ESC Off and Traction Control Off option. The StabiliTrak/Electronic Stability Control Off light will display in the instrument cluster. See *Electronic Stability Control (ESC) Off Light* ⇨ *127*.

The Traction Control System cannot be engaged when the StabiliTrak/Electronic Stability Control system is off.

For vehicles without air suspension, the StabiliTrak/Electronic Stability Control system automatically engages if the vehicle exceeds 56 km/h (35 mph) and cannot be turned off again until speed is reduced to under 56 km/h (35 mph). Traction control will remain off.

Vehicles with air suspension re-enable Stabilitrak/Electronic Stability Control at 32 km/h (20 mph).

Entering Teen Driver will automatically enable both the Traction Control System and StabiliTrak/Electronic Stability Control system and prevent these safety features from being turned off. See *Teen Driver* ⇨ *177*.

Adding accessories can affect the vehicle performance. See *Accessories and Modifications* ⇨ *309*.

Driver Mode Control

Driver Mode Control allows the driver to adjust the overall driving experience to better suit preference by adjusting multiple subsystems simultaneously. Drive mode

NOT FOR RESALE

availability and affected vehicle subsystems are dependent upon vehicle trim level, region, and optional features.

Tour mode defaults at every ignition cycle, unless My Mode is engaged. A unique and persistent indicator will be displayed in the instrument cluster for each mode.

Depending on trim level, Tour mode, Sport mode, Snow/Ice mode, Off-Road mode, Tow/Haul mode, Terrain mode, My Mode, and V-Mode may be available.

Non V-Series Shown, V-Series Similar

To activate each mode, press the MODE button on the instrument panel to the left of the steering wheel. To activate Terrain mode, press button located next to the MODE button.

Tour Mode: Use this mode for normal city and highway driving to provide a smooth ride. This setting provides balance between comfort and handling. This is the standard/default mode. There is no persistent indicator in the instrument cluster for this mode.

Sport Mode: Use this mode where road conditions or personal preference demand a more controlled response. When in Sport mode the vehicle automatically down shifts. In this mode, the vehicle also monitors driving behaviors and automatically enables Performance Shift Features when spirited driving is detected. These features maintain lower transmission gears to increase available engine braking and improve acceleration response. The vehicle resumes normal operation after a short period when no spirited driving is detected. The steering changes to provide more precise control. If the vehicle has Magnetic Ride Control, the suspension changes to provide better cornering performance.

V-Series only: Sport mode will provide more torque to the rear wheels.

Snow/Ice Mode: Use this mode to improve vehicle acceleration on snow and ice covered roads. When active, Snow/Ice mode adjusts acceleration to optimize traction on slippery surfaces. This can compromise the acceleration on dry asphalt. This feature is not intended for use when the vehicle is stuck in sand, mud, ice, snow, or gravel. If the vehicle becomes stuck, see *If the Vehicle Is Stuck* ➪ *199*.

V-Series only: If traction control is disabled when in Snow/Ice mode the transfer case and the electronic limited slip differential will operate in a more aggressive manner to provide maximum traction. Snow/Ice mode will provide more torque to the front wheels.

Off-Road Mode: Use this mode for off-road recreational driving. Off-Road mode should be used to improve driving at moderate speeds, on grass, gravel, dirt, unpaved roads, or snow-covered roads. The accelerator pedal is tuned for off-road use. If equipped with the following features, Off-Road mode modifies pedal mapping, ride height, and Traction Control System performance. For more information on off-road driving, including important warnings and precautions, see *Off-Road Driving* ➪ *193*.

NOT FOR RESALE

Tow/Haul Mode: Use this mode when hauling heavy loads for increased performance and vehicle control. Tow/Haul mode adjusts the transmission shift pattern, steering, and StabiliTrak/Electronic Stability Control performance.

If the vehicle is turned off while in Tow/Haul mode and then restarted within four hours or less, it will remain active. Otherwise, the vehicle will start in Tour mode. Tow/Haul mode turns on trailer sway control.

For more information on trailer weight specifications, see *General Towing Information* ⇨ *306*.

Terrain Mode: Use this mode when traveling on very rough roads at very low speeds, such as a two-track or heavily rutted road. This mode can also be used for pulling a boat out of the water on a trailer. When in Terrain mode, the vehicle shifts automatically, but will hold a lower gear longer to maximize engine torque. This mode has a unique pedal map and transmission shift pattern for better control at lower speeds and over rough terrain. This mode modifies accelerator pedal mapping, transmission shift pattern, ride height, and Electronic Limited-Slip Differential.

When the vehicle comes to a stop on an upward grade, automatic vehicle hold is engaged until the driver presses the accelerator pedal. Stop/Start and cruise control are disabled in Terrain mode.

Active Braking during lift throttle will be engaged. This feature automatically applies light braking to simulate heavy engine braking of four-wheel-drive low. It also applies light braking in D (Drive) until the vehicle is at idle speeds. In L1 and L2 light braking will typically bring the vehicle to a stop. Active Braking during lift throttle also reduces trailer braking.

Terrain mode automatically exits to Tour mode if the brake temperatures become too hot, electronic parking brake becomes inoperable, or the vehicle cannot perform braking or vehicle hold.

For more information on off-road driving, including important warnings and precautions, see *Off-Road Driving* ⇨ *193* and *Hill and Mountain Roads* ⇨ *198*.

V-Mode

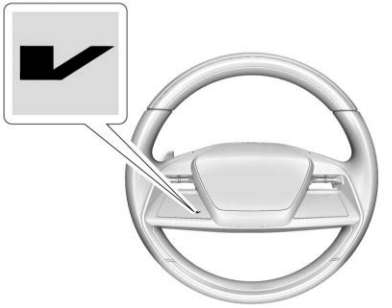

If equipped, to activate V-Mode, press the V-Mode button on the steering wheel.

V-Mode (V-Series Only) and My Mode

V-Mode and My Mode are used to personalize everyday driving. These modes allow the driver to configure the vehicle system settings to their driving preferences. My Mode will remain active every time the vehicle is started. To customize V-Mode or My Mode, see “Drive Mode Customization.”

NOT FOR RESALE

Launch Control (V-Series Only)

Launch Control is available within V-Mode only to allow high levels of vehicle acceleration in a straight line. Launch Control is a form of traction control that manages tire spin while launching the vehicle. This feature is intended for use during closed course race events where up to 97 km (60 mph) are desirable. Launch Control is only available when the following criteria are met:

- V-Mode is selected.
- The vehicle is not moving.
- The steering wheel is pointing straight.
- The brake pedal is firmly pressed to the floor, equivalent to a panic brake event.
- The accelerator pedal is rapidly applied to wide open throttle. If the vehicle rolls due to wide open throttle, release the throttle, press the brake pedal more firmly, and reapply the accelerator to wide open throttle.

Launch Control will initially limit vehicle speed as rapidly applying the accelerator pedal to a wide open throttle. Allow the engine rpm to stabilize and wait for the traction control light to begin flashing. This indicates that the vehicle is ready to launch. A smooth, quick release of the brake pedal, while maintaining the fully pressed accelerator pedal, will manage wheel slip.

After the first launch the system will learn what traction is available and adjust for repeated runs. Re-entering V mode will reset launch control targets to 100%. Launch Control is designed for a closed course race track and not intended for public roads. The system is not intended to compensate for lack of driver experience or familiarity with the race track.

Drive Mode Customization

The vehicle is equipped to modify the following settings based on vehicle content. From the infotainment home screen, select Drive Modes > Vehicle > Drive Mode Customization to customize and personalize My Mode or V-Mode, or turn on or off Visualization.

These settings will be retained over each key cycle, and do not have to be reset each time the vehicle is started. The following settings may be available depending on region, trim level, and optional features.

Engine Sound: Engine sound settings adjust the volume of engine noise. Engine sound is quieter at lower settings and louder at higher settings.

Steering: Steering settings adjust the effort required to turn the steering wheel. Steering feel is less responsive at lower settings and more responsive at higher settings.

Suspension: Suspension settings adjust the stiffness of the shocks and/or springs. The ride is more comfortable at lower settings and stiffer at higher settings for better control.

Engine Shift: Engine shift settings adjust the throttle response, gear shifting, and engine performance. Throttle response increases at higher settings and gear shifting is more aggressive.

Brake Response: Brake response settings adjust the brake pedal response. Brake pedal feel is less sensitive at lower settings and more sensitive at higher settings.

All-Wheel Drive: All-Wheel Drive settings adjust the driveline system. Each setting is tuned for optimal driving and handling performance in different road conditions.

NOT FOR RESALE

Magnetic Ride Control

This vehicle may have a semi-active damping system called Magnetic Ride Control. With this feature, improved vehicle ride and handling is provided under a variety of passenger and loading conditions.

Limited-Slip Differential

If equipped, the limited-slip differential can give more traction on snow, mud, ice, sand, or gravel. It works like a standard axle most of the time, but when traction is low, this feature allows the drive wheel with the most traction to move the vehicle. For vehicles with the limited-slip differential, driven under severe conditions, the rear axle fluid should be changed. See *Maintenance Schedule* ⇨ *395*.

Air Suspension

The air suspension feature provides full time load leveling capability along with the benefit of adjusting ride height for increased convenience and capability.

⚠ Warning

To help avoid personal injury or death, make sure the area underneath the vehicle and inside the wheel wells is clear when lowering the vehicle.

⚠ Warning

To help avoid personal injury or death, always select the lowest ride height for the current driving conditions. Higher ride heights raise the vehicle's center of gravity, increasing the chance of a rollover during extreme maneuvers.

⚠ Warning

Heavy loads on the roof rack will make the vehicle's center of gravity higher, increasing the possibility of a rollover. To avoid losing control of the vehicle, always select the normal height setting and avoid high speeds, sudden starts, sharp turns, sudden braking, or abrupt maneuvers when carrying cargo on the roof rack.

Changing Ride Height

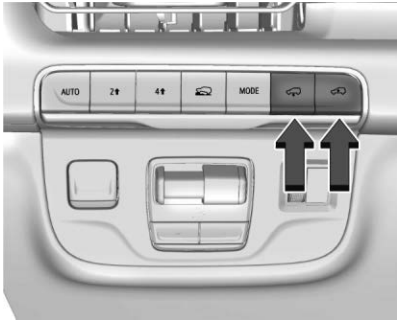

Non V-Series Shown, V-Series Similar

Press either “Up” or “Down” Ride Height button to open the Ride Height menu and select the desired ride height. After a brief pause, the selection will finalize and unavailable ride heights will be disabled in the menu.

Ride Height Descriptions

Normal Height

Normal Height is the standard vehicle height used for everyday driving.

NOT FOR RESALE

Entry/Exit Height

Entry/Exit Height is 50 mm (2 in) lower than Normal Height. This ride height lowers the vehicle for easy entry and exit from the vehicle and provides a lower height for loading and unloading cargo from any door or the rear liftgate.

This ride height can be selected in the Ride Height menu at any vehicle speed. When Entry/Exit Height is selected at higher speeds, the vehicle will lower once it slows to less than 12 km/h (7 mph).

The vehicle will automatically raise to Normal Height from Entry/Exit Height when the vehicle speed exceeds 8 km/h (5 mph). If no door has been opened since lowering to Entry/Exit Height, the vehicle will raise to Normal Height once it reaches 30 km/h (19 mph). This gives the driver more flexibility when lowering to Entry/Exit Height for passenger pick up and drop off.

The driver can enable Automatic Entry/Egress mode to automatically lower to Entry/Exit Height when the vehicle is shifted to P (Park). To enable Automatic Entry/Egress mode, on the infotainment home screen, select Settings > Vehicle > Ride Height. When the vehicle is higher than Normal Height, Automatic Entry/Egress mode disables. When the vehicle is in Tow/Haul mode, Off-Road mode, or it senses a trailer is connected, Automatic Entry/Egress mode disables.

Increased Height

Increased Height is 25 mm (1 in) higher than Normal Height. This ride height raises the vehicle for off-road use, allows for higher speeds than Maximum Height, and is only available with specific optional content.

Increased Height can be selected in the Ride Height menu while the vehicle speed is less than 80 km/h (50 mph). If the vehicle speed exceeds 80 km/h (50 mph), the vehicle will automatically lower to Normal Height.

Off-Road mode and Terrain mode will automatically set Increased Height when the vehicle speed is less than 80 km/h (50 mph). If the vehicle speed exceeds 80 km/h (50 mph), the vehicle will lower to Normal Height. The vehicle maintains Normal Height until it slows to less than 16 km/h (10 mph) and then the vehicle will automatically raise back to Increased Height.

The vehicle will automatically lower from Increased Height to Normal Height to provide improved stability if aggressive maneuvers are detected.

Maximum Height

Maximum Height is 50 mm (2 in) higher than Normal Height. This ride height raises the vehicle for off-road use and is only available with specific optional content.

To raise the vehicle to Maximum Height, you must first shift the transfer case to 4↓. Once the transfer case is in 4↓ and the vehicle speed is less than 48 km/hr (30 mph), select Maximum Height in the Ride Height menu. If the vehicle speed exceeds 48 km/h (30 mph), the vehicle will automatically lower to Increased Height.

The vehicle will automatically lower from Maximum Height to Normal Height to provide improved stability if aggressive maneuvers are detected.

Aerodynamic Height

Aerodynamic Height is 20 mm (0.75 in) lower than Normal Height. This ride height lowers the vehicle at higher vehicle speeds to improve aerodynamics.

NOT FOR RESALE

The vehicle will automatically lower to Aerodynamic Height when the vehicle speed exceeds 105 km/h (65 mph) for a period of time. The vehicle will raise to Normal Height when the vehicle slows to less than 48 km/h (30 mph).

Aerodynamic Height is automatically disabled when a trailer is connected to the vehicle or Tow/Haul mode is active.

Lowered Height (V-Series Only)

Lowered Height is 20 mm (0.75 in) lower than Normal Height. This ride height lowers the vehicle to enhance handling and is only available with specific optional content.

V-Mode will automatically set Lowered Height when enabled. See *Driver Mode Control* ➪ *224*.

Suspension Modes

The air suspension has two special modes, Service mode and Alignment mode. To access these modes, on the infotainment home screen, select Settings > Vehicle > Suspension.

Service Mode

Service mode will disable all air suspension operation, including raising and lowering the vehicle and operation of the air compressor.

This mode is useful when a flat bed tows the vehicle or when someone is performing work under the vehicle.

Place your vehicle in Service mode when you put it on a hoist or raise a corner using a floor jack. Service mode automatically disables when the vehicle speed exceeds 32 km/h (20 mph).

Alignment Mode

Alignment mode will optimize the vehicle height to provide the most accurate wheel alignment. This mode should be enabled once you drive the vehicle onto the alignment station.

To enable Alignment mode, ensure the vehicle is at Normal height. Alignment mode automatically disables when vehicle speed exceeds 16 km/h (10 mph).

Air Suspension Operation with Door(s) or Hood Open

The air suspension temporarily suspends all height changes while the hood or any door is open. The air suspension resumes height changes once the hood and all doors are closed. An open rear liftgate does not suspend the air suspension operation.

System Over-Temperature

If the air suspension is under heavy use, the system may temporarily suspend all height changes to allow compressor cooldown. When this occurs and a height change is requested, a Leveling System Unavailable message will be displayed in the instrument cluster.

Suspension Lowered for Stability

In the event of a loss of Electronic Stability Control, the air suspension lowers the vehicle at higher speeds to provide increased stability. Vehicle Lowering for Stability displays in the instrument cluster.

Excessive Vehicle Loading

If the air suspension detects excessive vehicle loading, it does not raise above Normal Height.

Air Suspension Service

If Service Leveling System displays in the instrument cluster, see your authorized dealer immediately.

NOT FOR RESALE

Cruise Control

Adaptive Cruise Control (Advanced)

Adaptive Cruise Control allows you to select the cruise control set speed and the following gap. Read this entire section before using this system. The following gap is the following time (or distance) between your vehicle and a vehicle detected directly ahead in your path, moving in the same direction. If no vehicle is detected in your path, Adaptive Cruise Control works like regular cruise control. Adaptive Cruise Control uses a camera and radar sensor(s) to detect other vehicles.

If a vehicle is detected in your path, Adaptive Cruise Control can apply acceleration or limited, moderate braking to maintain the selected following gap. To disengage Adaptive Cruise Control , you can press the brake pedal at any time. If Adaptive Cruise Control is controlling the vehicle speed when the Traction Control System or StabiliTrak/ Electronic Stability Control system activates, Adaptive Cruise Control may automatically disengage. See *Traction Control/Electronic Stability Control* ⇨ *223*. When road conditions allow Adaptive Cruise Control to be safely used, Adaptive Cruise Control can be turned back on.

Disabling the Traction Control System or StabiliTrak/Electronic Stability Control system will disengage and prevent the engagement of Adaptive Cruise Control .

Adaptive Cruise Control can reduce the need for you to frequently brake and accelerate, especially when used on expressways, freeways, and interstate highways. When used on other roads, you may need to take over the control of braking or acceleration more often.

⚠ Warning

ACC has limited braking ability and may not have time to slow the vehicle down enough to avoid a collision with another vehicle you are following. This can occur when vehicles suddenly slow or stop ahead, or enter your lane. Also see “Alerting the Driver” later in this section. Complete attention is always required while driving and you should be ready to take action and apply the brakes. See *Defensive Driving* ⇨ *191*.

⚠ Warning

ACC will not detect or brake for children, pedestrians, animals, or other objects.

Do not use ACC when:

- On winding and hilly roads or when the sensors are blocked by snow, ice, or dirt. The system may not detect a vehicle ahead. Keep the entire front of the vehicle clean.
- Visibility is poor due to rain, snow, fog, dirt, insect residue, or dust; when other foreign objects obscure the camera and/or radar; or when the vehicle in front or oncoming traffic causes additional environmental obstructions, such as road spray. ACC performance is limited under these conditions.
- On slippery roads where fast changes in tire traction can cause excessive wheel slip.

NOT FOR RESALE

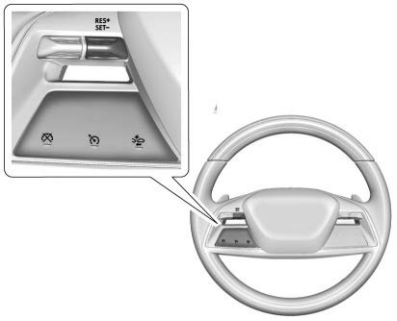

: Press to turn cruise control on or off. When Adaptive Cruise Control is the selected cruise control mode, the Adaptive Cruise Control light is lit white on the instrument cluster.

RES+ : Press the button up briefly to resume the previous set speed or use to increase vehicle speed if Adaptive Cruise Control is already activated. To increase speed by about 1 km/h (1 mph), press RES+ to the first position. To increase speed to the next 5 km/h (5 mph) mark on the speedometer, press RES+ to the second position.

SET– : Press the button down briefly to choose the set speed and activate Adaptive Cruise Control or to decrease the vehicle speed if Adaptive Cruise Control is already activated. To decrease speed by about 1 km/h (1 mph), press SET– to the first position. To decrease speed to the next 5 km/h (5 mph) mark on the speedometer, press SET– to the second position.

: Press to disengage Adaptive Cruise Control without erasing the selected set speed from memory. Press and hold to change the cruise control mode between Adaptive Cruise Control and regular cruise control.

: Press to select a following gap setting for Adaptive Cruise Control . Available settings include: Far, Medium, or Near.

The speedometer reading can be displayed in either English or metric units. See *Instrument Cluster* ⇨ *117*. The increment value used depends on the units displayed.

Switching Between Adaptive Cruise Control and Regular Cruise Control

To switch between Adaptive Cruise Control and regular cruise control, press and hold .
A Driver Information Display (DIC) message displays indicating the current cruise control mode. See *Vehicle Messages* ⇨ *139*.

⚠ Warning

Always check the cruise control indicator on the instrument cluster to determine which mode cruise control is in before using the feature. If ACC is not active, the vehicle will not automatically brake for other vehicles, which could cause a crash if the brakes are not applied manually. You and others could be seriously injured or killed.

Adaptive Cruise Control Indicator

Regular Cruise Control Indicator

When Adaptive Cruise Control is active, the Adaptive Cruise Control indicator light is lit green on the instrument cluster and the following gap setting will be displayed. When the regular cruise control is active, the cruise control indicator light is lit green on the instrument cluster, however the following gap setting is not displayed.

NOT FOR RESALE

Switch from Adaptive Cruise Control to regular cruise control only when there are no vehicles ahead of your vehicle.

When the vehicle is turned on, the cruise control mode will be set to the last mode used before the vehicle was turned off.

Setting Adaptive Cruise Control

If Adaptive Cruise Control is on when not in use, the button could be pressed to SET– or RES+ and activate Adaptive Cruise Control when not desired. Keep Adaptive Cruise Control off when it is not being used. Press to turn off Adaptive Cruise Control .

Select the set speed desired for Adaptive Cruise Control . The set speed is the vehicle speed that Adaptive Cruise Control will maintain when no vehicle is detected in your path.

The minimum selectable Adaptive Cruise Control set speed is 25 km/h (15 mph).

You can activate Adaptive Cruise Control when the vehicle speed is 5 km/h (3 mph) or more. When you press SET– to activate Adaptive Cruise Control , your vehicle will begin to accelerate to the minimum set speed of 25 km/h (15 mph) if your current vehicle speed is below 25 km/h (15 mph).

To choose the set speed and activate Adaptive Cruise Control while moving:

1. Press .
2. Accelerate to the desired speed.
3. Briefly press the button down to SET– and release it.
4. Remove your foot from the accelerator pedal.

When Adaptive Cruise Control is activated, it may immediately apply the brakes if a vehicle ahead is detected closer than the selected following gap.

Adaptive Cruise Control can also be set while the vehicle is stopped if Adaptive Cruise Control is on and the brake pedal is applied.

Adaptive Cruise Control Indicator

The Adaptive Cruise Control light displays on the instrument cluster and the Head-Up Display, if equipped. When Adaptive Cruise Control is on the indicator is lit white. When Adaptive Cruise Control is active, the indicator is lit green.

Be mindful of speed limits, surrounding traffic speeds, and weather conditions when selecting the set speed.

Resuming a Set Speed

If the Adaptive Cruise Control is set at a desired speed and then the brakes are applied, Adaptive Cruise Control is disengaged without erasing the set speed from memory.

To begin using Adaptive Cruise Control again, briefly press the button up to RES+ and release it:

- If the vehicle is moving more than 5 km/h (3 mph), Adaptive Cruise Control returns to the previous set speed.
- If the vehicle is stopped with the brake pedal applied, press up to RES+ and release the brake pedal. Adaptive Cruise Control will hold the vehicle until RES+ or the accelerator pedal is pressed.

The Adaptive Cruise Control light is lit green and the set speed display on the instrument cluster. The vehicle ahead indicator light may

NOT FOR RESALE

be flashing if a vehicle ahead was present and moved. See “Approaching and Following a Vehicle” later in this section.

Once Adaptive Cruise Control has resumed, the vehicle speed will increase to the set speed under the following conditions:

- There is no vehicle ahead.
- The vehicle ahead is beyond the selected following gap.
- The vehicle speed is not being limited because of a sharp turn.

Increasing Speed While Adaptive Cruise Control Is at a Set Speed

If Adaptive Cruise Control is already activated, do one of the following:

- Use the accelerator pedal to accelerate to the desired higher cruise speed. Briefly press and release the button down to SET– and release the accelerator pedal. The vehicle will now cruise at the higher set speed. When the accelerator pedal is pressed, Adaptive Cruise Control will not brake because you are overriding Adaptive Cruise Control . While overridden, the Adaptive Cruise Control light is lit blue on the instrument cluster.
- Press and hold the button up to RES+ until the desired set speed is displayed, then release it.
- To increase the vehicle speed in smaller increments, briefly press and release RES+ up to the first position. For each press, the vehicle speed increases by 1 km/h (1 mph).
- To increase the vehicle speed in larger increments, press RES+ up to the second position. While holding RES+ to the second position, the vehicle speed increases to the next 5 km/h (5 mph) mark on the speedometer, then continues to increase by 5 km/h (5 mph).

The set speed can also be increased while the vehicle is stopped:

- If stopped with the brake pedal applied, press the button up to RES+ until the desired set speed is displayed.
- If Adaptive Cruise Control is holding the vehicle at a stop and there is another vehicle directly ahead, pressing the button up to RES+ will increase the set speed.
- Pressing the button up to RES+ will resume Adaptive Cruise Control only when there is no longer a vehicle ahead or the vehicle ahead is pulling away and the brake pedal is not applied.

When it is determined that there is no vehicle ahead or the vehicle ahead is beyond the selected following gap, then Adaptive Cruise Control will increase the vehicle speed to the set speed.

Reducing Speed While Adaptive Cruise Control Is at a Set Speed

If Adaptive Cruise Control is already activated, do one of the following:

- Use the brake pedal to slow down to the desired lower cruise speed. Release the brake pedal and briefly press and release the button down to SET–. The vehicle will now cruise at the lower set speed.
- Press and hold the button down to SET– until the desired lower speed is reached, then release it.

NOT FOR RESALE

- To decrease the vehicle speed in smaller increments, briefly press and release SET– down to the first position. For each press, the vehicle speed decreases by 1 km/h (1 mph).
- To decrease the vehicle speed in larger increments, press SET– down to the second position. While holding SET– down to the second position, the vehicle speed decreases to the next 5 km/h (5 mph) mark on the speedometer then continues to decrease by 5 km/h (5 mph).

The set speed can also be decreased while the vehicle is stopped. If stopped with the brake applied, press or hold the button down to SET– until the desired set speed is displayed, then release it.

Selecting the Follow Distance Gap

When a slower moving vehicle is detected ahead within the selected following gap, Adaptive Cruise Control will adjust the vehicle's speed and attempt to maintain the selected following gap distance.

Press to adjust the following gap. Each press cycles through the three available settings: Far, Medium, or Near.

Pressing briefly displays the current gap setting on the instrument cluster and the Head-Up Display, if equipped.

The following gap setting is maintained until you change it.

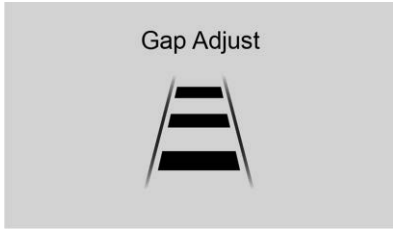

Far Gap Setting

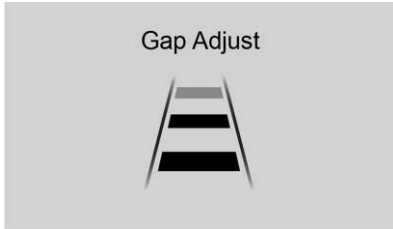

Medium Gap Setting

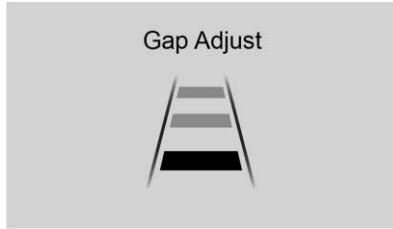

Near Gap Setting

If equipped, and a trailer is electrically connected, a trailer symbol is displayed with the following gap setting.

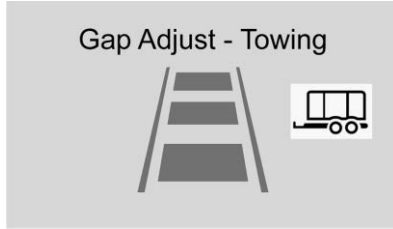

Far Gap Setting with Trailer

NOT FOR RESALE

Medium Gap Setting with Trailer

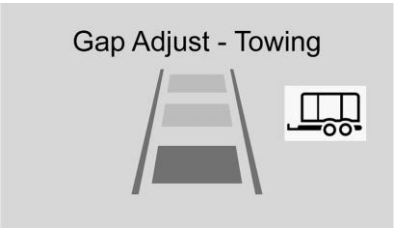

Near Gap Setting with Trailer

Since each following gap setting corresponds to a following time (Far, Medium, or Near), the following distance will vary based on the vehicle speed. The faster the vehicle speed, the further back your vehicle will follow a vehicle that is detected ahead. Consider traffic and weather conditions when selecting the following gap setting. The range of selectable gaps may not be appropriate for all drivers and driving conditions.

Changing the following gap setting automatically changes the alert timing sensitivity (Far, Medium, or Near) for the Forward Collision Alert feature. See *Forward Collision Alert (FCA) System* ➪ *284*.

Courtesy Gap

Press and hold when your vehicle is moving to temporarily increase the following gap distance with the vehicle ahead to allow for merging traffic.

Press and hold when your vehicle is stopped to cancel Adaptive Cruise Control from resuming automatically, if the stop is brief, and to remain stationary. This can be used to allow traffic to merge between your vehicle and the vehicle ahead. When ready to resume Adaptive Cruise Control , press the button up to RES+ or press the accelerator pedal.

Adaptive Cruise Control will return to maintaining the selected following gap after holding the vehicle.

Alerting the Driver

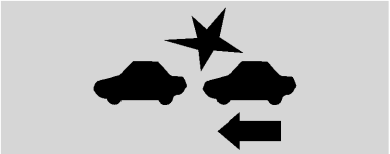

With Head-Up Display

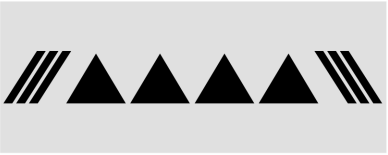

Without Head-Up Display

While Adaptive Cruise Control is active, driver action may be required when Adaptive Cruise Control cannot apply sufficient braking because your vehicle is approaching a vehicle ahead too rapidly.

When this condition occurs, the collision alert symbol will flash on the windshield, or on the Head-Up Display, if equipped. Either eight audible alerts will sound from the front, or both sides of the Safety Alert Seat, if equipped,

NOT FOR RESALE

will pulse five times. To view available settings from the infotainment home screen, touch Settings > Vehicle > Speed Assist.

See *Defensive Driving* ⇨ *191*.

Approaching and Following a Vehicle

The vehicle ahead indicator light is displayed in the instrument cluster and the Head-Up Display, if equipped. The vehicle ahead indicator light only displays when a vehicle is detected in your vehicle's path and is moving in the same direction. If this indicator light is not displaying, Adaptive Cruise Control will not respond to, or brake for, vehicles ahead.

Adaptive Cruise Control automatically slows the vehicle down and adjusts vehicle speed to follow a detected vehicle ahead at the selected following gap. The vehicle speed increases or decreases to follow a detected vehicle in front of your vehicle when that vehicle is traveling slower than your vehicle's Adaptive Cruise Control set speed. When active, Adaptive Cruise Control may apply limited braking, if necessary. When braking is active, the brake lights will come on. The automatic braking may feel or sound different than if the brakes were applied manually. This is normal.

Passing a Vehicle While Using Adaptive Cruise Control

If the set speed is high enough, and the left turn signal is used to pass a vehicle ahead in the selected following gap, Adaptive Cruise Control may assist by gradually accelerating the vehicle prior to the lane change.

⚠ Warning

When using ACC to pass a vehicle or perform a lane change, the following distance to the vehicle being passed may be reduced. ACC may not apply sufficient acceleration or braking when passing a vehicle or performing a lane change. Always be ready to manually accelerate or brake to complete the pass or lane change.

Stationary or Very Slow-Moving Objects

⚠ Warning

ACC may not detect and react to stopped or slow-moving vehicles ahead of you. For example, the system may not brake for a vehicle it has never detected moving. This can occur in stop-and-go traffic or when a vehicle suddenly appears due to a vehicle ahead changing lanes. Your vehicle may not stop and could cause a crash. Use caution when using ACC. Your complete attention is always required while driving and you should be ready to take action and apply the brakes.

Irregular Objects Affecting Adaptive Cruise Control

Adaptive Cruise Control may have difficulty detecting the following objects:

- Vehicles with cargo extending from the back end.
- Non-standard shaped vehicles, such as vehicle transport, vehicles with a side car fitted, or horse carriages.

NOT FOR RESALE

- Objects that are close to the front of your vehicle.

Adaptive Cruise Control Automatically Disengages

Adaptive Cruise Control may automatically disengage and the driver will need to manually apply the brakes to slow the vehicle if:

- The sensors are blocked.
- The Traction Control System or StabiliTrak/ Electronic Stability Control system has activated or been disabled.
- There is a fault in the system.
- The radar falsely reports blockage when driving in a desert or remote area with no other vehicles or roadside objects. A DIC message may display to indicate that Adaptive Cruise Control is temporarily unavailable.

The Adaptive Cruise Control light will be lit white when Adaptive Cruise Control is no longer active.

In some cases, when Adaptive Cruise Control is temporarily unavailable, regular cruise control may be used. See "Switching Between Adaptive Cruise Control and Regular Cruise Control" previously in this section. Always consider driving conditions before using either cruise control system.

Notification to Resume Adaptive Cruise Control

While active, Adaptive Cruise Control will maintain a following gap distance behind a detected vehicle and can slow your vehicle speed to a stop behind that vehicle.

If the stopped vehicle ahead has driven away and Adaptive Cruise Control has not resumed, the vehicle ahead indicator light will flash in the instrument cluster as a reminder to check traffic ahead before proceeding. In addition, the left and right sides of the Safety Alert Seat, if equipped, will pulse three times, or three audible alerts will sound. To view available settings, from the infotainment home screen, touch Settings > Vehicle > Speed Assist, then touch "Alert Type" or "Adaptive Cruise Go Notifier."

If equipped with the Driver Attention System, located on top of the steering column, when the vehicle ahead drives away, and Driver Attention System determines that the driver's attention is on the road ahead, Adaptive Cruise Control resumes automatically. See "Attention to the Road" under *Super Cruise* ⇨ *255*.

If necessary, briefly press the button up to RES+ and release it, or press the accelerator pedal to resume Adaptive Cruise Control . If stopped for more than two minutes or if the driver door is opened and the driver seat belt is unbuckled, Adaptive Cruise Control automatically applies the Electric Parking Brake to hold the vehicle. The Electric Parking Brake status light will turn on. See *Electric Parking Brake* ⇨ *220*. To release the Electric Parking Brake, press the accelerator pedal.

A DIC warning message may display indicating to shift to P (Park) before exiting the vehicle. See *Vehicle Messages* ⇨ *139*.

⚠ Warning

If ACC has stopped the vehicle, and if ACC is disengaged, turned off, or canceled, the vehicle will no longer be held at a stop. The vehicle can move. When ACC is holding the vehicle at a stop, always be prepared to manually apply the brakes.

NOT FOR RESALE

⚠ Warning

Leaving the vehicle without placing it in P (Park) can be dangerous. Do not leave the vehicle while it is being held at a stop by ACC. Always place the vehicle in P (Park) and turn off the ignition before leaving the vehicle.

Adaptive Cruise Control Override

If using the accelerator pedal while Adaptive Cruise Control is active, the Adaptive Cruise Control light is lit blue on the instrument cluster and the Head-Up Display, if equipped, to indicate that automatic braking will not occur. Adaptive Cruise Control will resume operation when the accelerator pedal is not being pressed.

⚠ Warning

The ACC will not automatically apply the brakes if your foot is resting on the accelerator pedal. You could crash into a vehicle ahead of you.

Curves in the Road

⚠ Warning

On curves, ACC may not detect a vehicle ahead in your lane. You could be startled if the vehicle accelerates up to the set speed, especially when following a vehicle exiting or entering exit ramps. You could lose control of the vehicle or crash. Do not use ACC while driving on an entrance or exit ramp. Always be ready to use the brakes if necessary.

⚠ Warning

On curves, ACC may respond to a vehicle in another lane, or may not have time to react to a vehicle in your lane. You could crash into a vehicle ahead of you, or lose control of your vehicle. Give extra attention in curves and be ready to use the brakes if necessary. Select an appropriate speed while driving in curves.

Adaptive Cruise Control may operate differently in a sharp curve. It may briefly reduce the vehicle speed if entering a curve that is too sharp.

If equipped, the Curve Speed Control light may display green when Adaptive Cruise Control detects a sharp curve in the road ahead and is actively controlling the vehicle speed.

Adaptive Cruise Control may automatically decrease the vehicle speed while entering the curve. Adaptive Cruise Control may accelerate when exiting the curve, but it will not exceed the set speed.

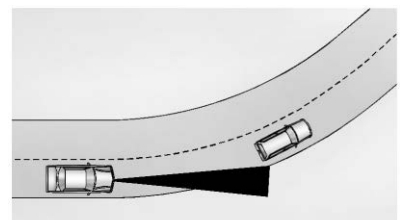

When following a vehicle and entering a curve, Adaptive Cruise Control may not detect a vehicle ahead and accelerate to the set speed. When this happens, the vehicle ahead indicator light is not displayed.

NOT FOR RESALE

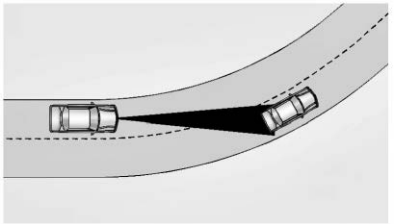

Adaptive Cruise Control may detect a vehicle that is not in your lane and apply the brakes.

Adaptive Cruise Control may occasionally provide an alert and/or braking that is considered unnecessary. It could respond to vehicles in different lanes or stationary objects when entering or exiting a curve. This is normal operation. The vehicle does not need service.

Other Vehicle Lane Changes

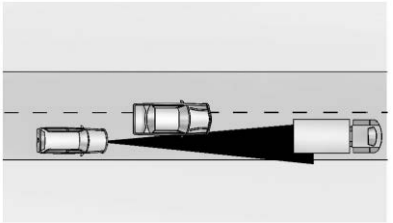

Adaptive Cruise Control will not detect a vehicle ahead until it is completely in the lane. You must be prepared to manually apply the brakes if necessary.

Objects Not Directly in Front of Your Vehicle

The detection of objects in front of your vehicle may not be possible if:

- The vehicle or object ahead is not within your lane.
- The vehicle ahead is shifted, not centered, or is shifted to one side of the lane.

Driving in Narrow Lanes

Vehicles in adjacent traffic lanes or roadside objects may be incorrectly detected when located along the roadway.

Do Not Use Adaptive Cruise Control on Hills

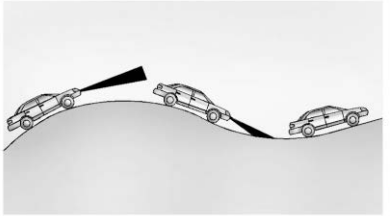

Do not use Adaptive Cruise Control when driving on steep hills as Adaptive Cruise Control may not detect a vehicle ahead.

Towing with Adaptive Cruise Control

Adaptive Cruise Control may be used when towing a trailer when trailer attached is within the GM-approved allowable size and weight limits. See *General Towing Information* ⇨ *306*.

When towing a trailer, if equipped, and while using Adaptive Cruise Control , the Adaptive Cruise Control driving characteristics such as the following gap, acceleration rates, and braking rates may be modified to provide a better towing experience.

Towing a trailer with Adaptive Cruise Control is not recommended with an aftermarket brake controller. Aftermarket brake controllers may not function properly with the Adaptive Cruise Control system.

When towing a trailer with Adaptive Cruise Control , it is important to properly set the trailer gain. See the section “Integrated Trailer Brake Control System” in *General Towing Information* ⇨ *306* for more information about the trailer gain adjustment procedure.

NOT FOR RESALE

Use Tow/Haul mode when driving down steep hills or mountain grades or when hauling heavy loads. See *Driver Mode Control* ➪ *224*.

Adaptive Cruise Control maintains the set speed when driving uphill and downhill while towing a trailer. However, Adaptive Cruise Control may make a slight changes to the cruise speed while driving on moderate hills if the combined vehicle and trailer weight is close to the maximum Gross Combined Weight Rating (GCWR). See *General Towing Information* ➪ *306*. This is normal Adaptive Cruise Control operation and is necessary to maintain the set speed.

Adaptive Cruise Control may disengage if it detects that the brake temperature exceeds the normal range.

Disengaging Adaptive Cruise Control

There are three ways to disengage Adaptive Cruise Control :

- Lightly apply the brake pedal.
- Press .
- Press .

Erasing Speed Memory

The Adaptive Cruise Control set speed is erased from memory if is pressed or when the vehicle is turned off.

Auto Set Speed

⚠ Warning

When using Auto Set Speed with ACC, the auto set speed may not always be updated when the speed limit changes. The system also does not set the vehicle speed to speed limits shown with supplementary traffic signs, for example in construction zones. Always be attentive to your surroundings and adhere to posted speed limit signs.

If equipped, the Auto Set Speed function uses detected road speed limits to assist setting the vehicle speed while ACC is engaged.

You can enable or disable this feature through vehicle settings. To view available settings from the infotainment screen, touch Settings > Vehicle > Speed Assist.

When ACC is engaged and Auto Set Speed is enabled, the vehicle will:

- use the road speed limit to maintain a set vehicle speed.
- change the ACC set speed to match the new road speed limit.

Increase or decrease ACC set speed at any time using the SET– or RES+ buttons, to a predefined limit. The accelerator pedal can also be used to override the set speed.

If you change ACC set speed, it will reset to the road speed limit under the following conditions:

- You pass a new road speed limit.
- ACC set speed is higher than the road speed limit, and the vehicle speed goes to or below the road speed limit.
- The accelerator pedal is used to increase the speed above road speed limit and then the pedal is released.

This function will not work when regular Cruise Control is the selected Cruise Control mode.

This function may not work for conditional speed limit signs, for example, during specific times or where workers present.

NOT FOR RESALE

Weather Conditions Affecting Adaptive Cruise Control

System operation may be limited under snow, heavy rain, or road spray conditions.

Accessory Installations and Vehicle Modifications

Do not install or place any object around the front camera windshield area that would obstruct the front camera view.

Do not install objects on top of the vehicle that overhang and obstruct the front camera, such as a canoe, kayak, or other items that can be transported on a roof rack system. See *Roof Rack System* ➪ *107*.

Do not modify the hood, headlights, or fog lights, as this may limit the camera's ability to detect an object.

Do not attach anything to the front or rear fascia as this may interfere with the radar sensor operation.

⚠ Warning

Stickers or accessories attached on or around the front or rear fascia of your vehicle can impair the radar sensors resulting in vehicle damage or personal injury. Your vehicle could brake suddenly. Do not attach anything on or around the front or rear fascia, including the license plate, the bumper, or the grille. Use only GM genuine accessories.

Cleaning the Sensing System

The camera sensor on the windshield behind the rearview mirror, and the sensors on the front of the vehicle can become blocked by snow, ice, dirt, mud, or debris. This area needs to be cleaned for Adaptive Cruise Control to operate properly.

If Adaptive Cruise Control will not operate, regular cruise control may be available. See "Switching Between Adaptive Cruise Control and Regular Cruise Control" previously in this section. Always consider driving conditions before using either cruise control system.

For cleaning instructions, see "Washing the Vehicle" under *Exterior Care* ➪ *384*.

Hands-On Steering Assist (Lane Centering Assistance)

⚠ Warning

Hands-On Steering Assist is a hands-on driver assistance feature. When using this feature, you must always keep your hands on the steering wheel and always be prepared to take immediate action. Hands-On Steering Assist provides lane centering steering assistance only by helping to maintain vehicle position in the current lane under certain, compatible conditions. Hands-On Steering Assist can only be used when Adaptive Cruise Control is enabled and engaged. Hands-on Steering Assist is not a self-driving system, does not perform all aspects of driving, and cannot accurately detect or predict all situations. Hands-On Steering Assist is not a crash avoidance system. To prevent serious injury or death, you must always supervise the driving task and always monitor the road conditions, including when Hands-on Steering Assist is engaged.

(Continued)

NOT FOR RESALE

Warning (Continued)

Hands-On Steering Assist does:

- Not prevent crashes or warn of possible crashes.
- Not provide steering or steering assistance to avoid stopped or slow-moving vehicles, cross-traffic, construction barriers or cones, motorcycles, children, pedestrians, animals, or other objects on the road.
- Not steer or provide steering assistance in response to vehicles or objects next to your vehicle, including vehicles attempting to enter your lane.
- Not respond to traffic lights, stop signs, or other traffic control devices.
- Not respond to crossing traffic.
- Not make turns.
- Not steer to merge onto or to exit highways.
- Not steer to avoid, or steer through construction zones.
- Not respond to oncoming traffic.

(Continued)

Warning (Continued)

- Not function when lane markings are not detected or the vehicle is not centered in lane.

⚠ Warning

Failure to supervise the driving task and to respond appropriately, even while Hands-On Steering Assist is operating, can cause a crash. Hands-On Steering Assist may not respond as you would to all driving situations and may not maintain lane position under all conditions. It is extremely important to pay attention to the operation of the vehicle, even while using Hands-On Steering Assist. Do not use a hand-held device while driving, even with Hands-On Steering Assist engaged. To prevent serious injury or death:

- Always remain properly seated in the driver seat with your seat belt fastened.

(Continued)

Warning (Continued)

- Always make sure traffic conditions are safe before using Hands-On Steering Assist.
- Always keep the front sensors clean.
- Always observe posted speed limits.
- Only use Hands-On Steering Assist at or below the posted speed limit.

Hands-On Steering Assist should not be used in complex or uncertain driving conditions, including:

- Not when approaching or exiting toll plazas.
- Not when approaching an intersection that is controlled with a traffic light, stop sign, or other traffic control device.
- Not when lane markings are not present or cannot be detected. For example, there is too much glare, weather conditions are poor, or lanes are poorly marked.
- Not on slippery or icy roads.

(Continued)

NOT FOR RESALE

Warning (Continued)

- Not in adverse weather conditions, including rain, sleet, fog, ice, or snow.
- Not on winding or hilly roads.
- Not during heavy or emergency braking.
- Not when towing a trailer that does not meet GM approved guidelines.
- Not in a highway exit lane.

Hands-On Steering Assist can only help the driver maintain a lane-centered position. You may need to respond to traffic events by steering, braking, or accelerating. Hands-On Steering Assist cannot determine whether you are awake, asleep, impaired, or properly focused on safe driving. If you are not attentive with your hands on the wheel and eyes on the road, when Hands-On Steering Assist disengages, the vehicle could crash into other vehicles, drive out of the lane, or drive off the road. See *Defensive Driving* ➪ *191*.

⚠ Warning

Hands-On Steering Assist may not detect lane markings while traveling on curved roads. If this occurs, the vehicle could drift out of your lane of travel when Hands-On Steering Assist is engaged. Hands-On Steering Assist may also abruptly disengage more often around sharp curves especially when towing a trailer. To prevent crashes, always pay attention to the road and always be prepared to take immediate action by firmly steering the vehicle.
You are always responsible for the safe operation of the vehicle, especially braking, steering, and controlling the speed and distance from other vehicles.

If equipped and enabled, Hands-On Steering Assist helps keep your vehicle centered in its lane using the front camera module to detect lane markings, steering wheel touch sensors to monitor hand placement, and the Driver Attention System to confirm your eyes are on the road.

Hands-On Steering Assist provides only steering assistance, it does not steer for you and requires you to keep your hands on the steering wheel at all times. When using this feature, the vehicle will maintain a set speed and following distance from a lead vehicle.

The Hands-On Steering Assist feature works with Adaptive Cruise Control and Super Cruise, if equipped. See *Adaptive Cruise Control (Advanced)* ➪ *231* and *Super Cruise* ➪ *255*.

Hands-On Steering Assist differs from Lane Keep Assist, which offers limited steering correction only when a lane departure is detected, by providing continuous steering assistance when engaged. See *Lane Keep Assist (LKA)* ➪ *301*.

To view available settings from the infotainment app screen, select Settings > Vehicle > Lane Centering Assistance.

Hands-On Steering Assist Requirements

Hands-On Steering Assist is designed to operate only when:

- The vehicle has an active Connected Service plan through OnStar.
- Adaptive Cruise Control is engaged. See *Adaptive Cruise Control (Advanced)* ➪ *231*.
- The system detects the driver's hands are on the steering wheel.

NOT FOR RESALE

- The Driver Attention System detects the driver's head and eyes are directed toward the road ahead.
- The driver's seat belt is buckled.
- The lane markings are clearly visible and detectable by the system.
- The outside temperature is not too cold (i.e., not below 15° F (-9° C)).
- The vehicle speed is less than approximately 85 mph (137 km/h).
- Teen Driver, if equipped, is not active.
- The camera and radar sensors are functioning and not covered, obstructed, or damaged.
- Adjustable Ride Height, if equipped, must be at Normal ride height.
- There are no other conditions preventing the system from working properly.

Hands-On Steering Assist Limitations

Hands-On Steering Assist cannot provide sufficient lane steering assistance to keep the vehicle centered in all driving conditions. It will not change lanes and does not provide automatic lane changing – it provides lane centering assistance only within your current lane of travel. If the feature is unable to provide sufficient lane centering assistance, it may disengage abruptly with little advanced warning.

This feature may not be able to provide sufficient lane centering assistance in the following conditions:

- The required steering effort to maintain lane centering exceeds the system limit – for example, when the curve in the road is too tight or the curvature of the road combined with your speed exceeds the feature's steering assist capabilities.
- Lane markings are not present or cannot be detected, or when lanes merge or split. For example, there is too much glare, weather conditions are poor, or lanes are poorly marked.
- The area you are driving in is under construction or roadwork is in progress.
- The front windshield camera and/or the front radar are blocked.

Operating Hands-On Steering Assist

1. Start the vehicle.
2. Enable Adaptive Cruise Control by pressing the Adaptive Cruise Control button on the steering wheel. The white Adaptive Cruise Control light displays in the instrument cluster.
3. Enable Hands-On Steering Assist and Super Cruise, if equipped, by pressing the Super Cruise button on the steering wheel.
   - The white Hands-On Steering Assist light displays in the instrument cluster.

     Adaptive Cruise Control, Hands-On Steering Assist, and Super Cruise, if equipped, will remain enabled the next time you start the vehicle.
4. Engage Adaptive Cruise Control by pressing the SET+/RES– button. The green Adaptive Cruise Control light displays with the set speed limit.

   Once Adaptive Cruise Control is engaged, when your vehicle is centered in the lane and detects lane markers, Hands-On Steering Assist begins providing lane centering assistance. When Hands-On

NOT FOR RESALE

Steering Assist is engaged, the white Hands-On Steering Assist light displays green.

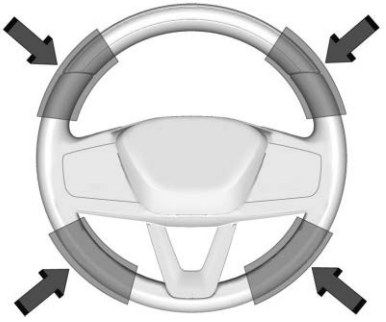

Steering Wheel Sensors

5. Hold the steering wheel firmly with both hands using the steering wheel sensor locations shown.

To adjust vehicle position within the lane, change lanes, turn, or maneuver around any object in your path, you must manually take control of the steering. Once you center the vehicle back in the lane, the feature will automatically reengage and actively provide hands-on lane centering steering assistance.

Manually Canceling Hands-On Steering Assist

Hands-On Steering Assist can be manually canceled by any of the following actions:

- Pressing the Super Cruise button on the steering wheel.
- Disengaging Adaptive Cruise Control by: stepping lightly on the brake pedal, pressing the Adaptive Cruise Control , or canceling the speed setting buttons on the steering wheel.
- Pressing the Regen On Demand paddle, if equipped.

Automatic Disengagement of Hands-On Steering Assist

Warning

Hands-On Steering Assist will not maintain the vehicle's speed while the Hands-On Steering Assist light is flashing red. If the Hands-On Steering Assist light flashes red, immediately take action by firmly steering the vehicle to prevent serious

(Continued)

Warning (Continued)

injury or death. If the feature is engaged, the green Hands-On Steering Assist light is illuminated, and you remove your hands from the steering wheel or eyes from the road, do not promptly return them, and ignore the alerts and messages, including the red flashing Hands-On Steering Assist light, the system will begin to apply the brakes and slowly bring your vehicle to a stop within the lane of travel, activate the hazard lights, and call OnStar.

Disengagement Due to System Limitations

The system will automatically disengage when an external condition or system limitation exists, for example, no lane markers are detected or the curve in the road is too tight.

The system may disengage frequently and abruptly due to system limitations with little advance warning.

NOT FOR RESALE

Disengagement Due to Hands-Off or Eyes-Off

The system will automatically disengage when the steering wheel sensors detect your hands are not on the steering wheel and your head and eyes are not directed toward the road ahead.

Warnings Before Disengagement

Before the system disengages due to system limitations or because your hands are off the steering wheel or your eyes are not focused on the road, you will receive one or more of the warnings below depending on the circumstances prompting your immediate action:

- An alert message displays in the Driver Information Center
- The Hands-On Steering Assist lights may flash green or turn red
- Audible alerts sound
- The Safety Alert Seat vibrates, if equipped and enabled

When this happens, you must take immediate action by firmly steering the vehicle and ensure your eyes are on the road ahead. When the feature is engaged and no system limitations are present and your hands are off the steering wheel or eyes off the road, if you continue to ignore the alerts and fail to put your hands back on the steering wheel or eyes on the road, the system will begin to apply the brakes and slowly bring your vehicle to a stop within the lane of travel, activate the hazard lights, and call OnStar. See *Super Cruise* ⇨ *255*.

Repeated misuse – hands off the steering wheel or eyes off the road – and disregard of these warnings may result in being locked out of the feature for a period of time. Repeated lockout events may delay the feature availability.

Caution

If you drive with your hand (or hands) on the top of the steering wheel, you may block the Driver Monitoring System camera, which is mounted on the top of the steering column. See *Defensive Driving* ⇨ *191*. If this camera is blocked, it cannot confirm that you have your eyes and attention on the road, and the system will alert you that it is disengaging if you do not put your eyes on the road. For the best experience with Hands-On Steering Assist, avoid holding the top center of the steering wheel to drive.

Hands-On Steering Assist will not provide steering assistance and will enter standby mode if a turn signal is active, if it detects that you are accelerating or braking quickly, or if you are intentionally steering across a lane marker.

When Adaptive Cruise Control is active and Hands-On Steering Assist is automatically disengaged, whether due to a system limitation or failure to keep hands on the steering wheel and eyes on the road, Hands-on Steering Assist remains in standby mode and will automatically reengage when the vehicle is again centered in the lane and the system detects lane markers.

How Adaptive Cruise Control, Hands-On Steering Assist, and Super Cruise Work Together

⚠ Warning

Taking your hands off the wheel can result in loss of control of the vehicle. Never take your hands off the wheel unless and until the steering lightbar is green, which indicates that Super Cruise Hands-Free is engaged.

NOT FOR RESALE

Adaptive Cruise Control, Hands-On Steering Assist, and Super Cruise, if equipped, provide increasing levels of driver assistance as follows:

1. Adaptive Cruise Control
   - Maintains your speed and following distance
2. Hands-On Steering Assist
   - Adds lane centering and steering support
3. Super Cruise, if equipped
   - Allows for hands-free driving assistance, including steering, braking, and acceleration
   - Limited to Super Cruise mapped and enabled roads

The system automatically engages the highest level of assistance available and appropriate based on the road and operating conditions. The level of assistance available and its status, whether enabled (in standby mode), engaged (active mode), or when disengaging, is displayed in the instrument cluster, message alerts in the Driver Information Center, and the steering wheel lightbar. See "Driver Assistance Levels and Display Indicators in Increasing Order of Assistance" later in this section.

Trailer Towing With Hands-On Steering Assist

Hands-On Steering Assist may be used when towing a trailer when the attached trailer is within size and weight limits designated in the Trailer Towing section. See *General Towing Information* ➪ *306*.

When Hands-On Steering Assist is used with vehicles equipped with an aftermarket trailer brake controller, disengage Hands-On Steering Assist before applying the manual trailer brake. Hands-On Steering Assist will not automatically disengage when manual trailer brake is applied.

Hands-On Steering Assist can recognize when the vehicle is pulling a trailer and adjusts the following gap for extra stopping distance.

NOT FOR RESALE

Hands-On Steering Assist Message Summary

Alert messages for this feature are displayed in the Driver Information Center. See *Instrument Cluster* ⇨ *117*. All alert messages refer to this feature as "Lane Centering Assistance".

Hands-on lane centering on but not active.	• Hands-On Steering Assist is enabled but not actively providing lane centering steering assistance. Hands-On Steering Assist has been temporarily overridden by the driver manually taking over steering control, for example, to manually change lanes.
Lane centering active. Keep hands on.	• Hands-On Steering Assist is actively providing steering assistance.
Take vehicle control.	• Hands-On Steering Assist is prompting you to take full manual control of steering immediately. If you fail to immediately resume full manual steering control, the system will disengage.
Lane centering assistance unavailable.	• Rain or snow is inhibiting the system's ability to see lane markers. • Direct sunlight is on the front camera. • There are missing or poor lane markings on the road. • There is sun glare on the road surface. • There is heavy rain, puddles, road spray, or inclement weather conditions that are affecting system performance. • Adaptive Cruise Control is not enabled.
Keep eyes on road while using lane centering.	• Alert for you to pay attention to the road.
Keep hands on for lane centering.	• Alert for you to keep hands on the steering wheel.

NOT FOR RESALE

Lane centering assistance locked out.	• You did not take control of the vehicle when prompted by the Hands-On Steering Assist system. The Hands-On Steering Assist system will be disabled until the vehicle is turned off and back on.
Lane centering unavailable. Can't see face.	• Sun is shining into the Driver Attention System camera. • Sun glare is on the driver's face. • Cups, food, hands, or other objects are obscuring the Driver Attention System view of the driver's face. • The steering column is pointed too high or low for the Driver Attention System to detect the driver. • Adjust the steering column or the seat if the message occurs frequently.

NOT FOR RESALE

Driver Assistance Levels and Display Indicators in Increasing Order of Assistance

Driver Assistance Feature	Instrument Cluster Light and Color	Steering Wheel Lightbar	Status of Driver Assistance Feature
Adaptive Cruise Control	White	Off	Adaptive Cruise Control is enabled and in standby mode.
	Green	Off	Adaptive Cruise Control is actively controlling your speed and maintaining an appropriate and preselected following distance with the lead vehicle.
	Blue	Off	Adaptive Cruise Control was overridden and will not brake nor maintain following distance.

NOT FOR RESALE

Driver Assistance Feature	Instrument Cluster Light and Color	Steering Wheel Lightbar	Status of Driver Assistance Feature
Hands-On Steering Assist (Lane Centering)	White	Off	Hands-On Steering Assist is enabled but not actively providing lane centering steering assistance.
	Green	Off	Hands-On Steering Assist is actively providing lane centering steering assistance.
	Flashing Green	Off	Hands-On Steering Assist has detected your hands are not on the steering wheel or you are not paying sufficiently close attention to the road.

NOT FOR RESALE

Driver Assistance Feature	Instrument Cluster Light and Color	Steering Wheel Lightbar	Status of Driver Assistance Feature
Hands-On Steering Assist (Lane Centering) (Continued)	Red or Flashing Red	Off	Hands-On Steering Assist is prompting you to take full manual control of steering immediately. If you fail to immediately resume full manual steering control, the system will disengage.
Hands-Free Super Cruise, if equipped	White	Off	Hands-Free Super Cruise is enabled and in standby mode.
	Green	Green	Hands-Free Super Cruise is actively steering your vehicle. Pay attention to the road and vehicle operation. Do not take your hands off the wheel until the steering wheel lightbar is solid green.

NOT FOR RESALE

Driver Assistance Feature	Instrument Cluster Light and Color	Steering Wheel Lightbar	Status of Driver Assistance Feature
Hands-Free Super Cruise, if equipped (Continued)	Green	Flashing Green	Hands-Free Super Cruise has detected you are not paying sufficiently close attention to the road. Pay attention to the road ahead. The steering wheel lightbar will flash green as well.
	Red	Flashing Red	Take over steering immediately. Hands-Free Super Cruise will disengage if you fail to take over steering. The steering wheel lightbar will flash red.

Connectivity

An active Connected Service plan that includes Super Cruise Services is required to use Super Cruise, if equipped, and Hands-On Steering Assist. If the vehicle is equipped with OnStar and has an active service plan, additional data may be collected through the OnStar system. This includes information about: the vehicle's operation; a crash involving the vehicle; the use of the vehicle and its features; and, in certain situations, the location and approximate GPS speed of the vehicle. If vehicle location sharing is disabled, or Terms and Conditions are not accepted, data would no longer be collected. Refer to the OnStar Terms and Conditions and Privacy Statement on the OnStar website.

For additional information on Hands-On and Hands-Free driving, see https://www.onstar.com/services/super-cruise-hands-free-driving.

NOT FOR RESALE

System Care

Caution

The Hands-On Steering Assist system is a highly sophisticated system and should only be serviced by technicians with the proper training, tools, and safety instructions, which your dealer has. Without proper training and tools the vehicle may become damaged.

The Driver Attention System's camera on the steering column, which continually monitors the driver's head movements and eye gaze location to determine driver attentiveness, has a lens cover that may become dirty over time and affect camera performance. Clean the lens cover with a soft cloth sprayed with glass cleaner. Wipe the lens gently, then dry it. Never use abrasive cloths/cleaners or corrosive chemicals on the lens cover.

Super Cruise

⚠ Warning

Super Cruise does not perform all aspects of driving, nor does it do everything a driver can do. Super Cruise only steers to maintain vehicle position in the current lane or, under some circumstances, to change lanes. Super Cruise can only be used with Adaptive Cruise Control.

Super Cruise does:

- Not prevent crashes or warn of possible crashes.
- Not steer to avoid stopped or slow-moving vehicles, cross-traffic, construction barriers or cones, motorcycles, children, pedestrians, animals, or other objects on the road.
- Not steer in response to vehicles or objects next to your vehicle, including vehicles attempting to enter your lane.
- Not respond to traffic lights, stop signs, or other traffic control devices.

(Continued)

Warning (Continued)

- Not respond to crossing traffic.
- Not make turns.
- Not steer to merge onto or to exit highways.
- Not steer to avoid, or steer through construction zones.
- Not function on surface streets.
- Not respond to oncoming traffic.
- Not function in city driving conditions.

⚠ Warning

Failure to supervise the driving task and to respond appropriately, even while Super Cruise is operating, can cause a crash. Super Cruise may not respond as you would to all driving situations and may not maintain lane position under all conditions.

It is extremely important to pay attention to the operation of the vehicle, even while using Super Cruise. Do not use a hand-

(Continued)

NOT FOR RESALE

Warning (Continued)

held device while driving, even with Super Cruise engaged. To prevent serious injury or death:

- Always remain properly seated in the driver seat with your seat belt fastened.
- Never remove your hands from the steering wheel when Super Cruise is not operating.
- Always make sure traffic conditions are safe before using Super Cruise.
- Always keep the entire vehicle and the sensors clean. Sensors are on the front, sides, and rear of the vehicle.
- Always observe posted speed limits. Only use Super Cruise at or below the posted speed limit.

Super Cruise should not be used in complex or uncertain driving conditions, including:

- Not in construction zones.
- Not when approaching or exiting toll plazas.

(Continued)

Warning (Continued)

- Not when approaching an intersection that is controlled with a traffic light, stop sign, or other traffic control device.
- Not when lane markings are not present or cannot be detected. For example, there is too much glare, weather conditions are poor, or lanes are poorly marked.
- Not on slippery or icy roads.
- Not in adverse weather conditions, including rain, sleet, fog, ice, or snow.
- Not on winding or hilly roads.
- Not for city driving.
- Not during heavy or emergency braking.
- Not on surface streets.
- Not on a road shoulder, service drive, or under an elevated freeway.
- Not when towing a trailer that does not meet GM approved guidelines.
- Not in a highway exit lane.

⚠ Warning

Super Cruise can only assist to maintain lane position, or steer to change lanes, when driving on compatible roads. You must supervise the driving task and monitor the road conditions. You may need to respond to traffic events by steering, braking, or accelerating. See Defensive Driving.

Super Cruise is:

- Not a self-driving system
- Not a crash avoidance or warning system
- Not a substitute for proper supervision of the driving task

⚠ Warning

Some state and local laws may require hands to be kept on the steering wheel at all times. Only remove your hands from the steering wheel if Super Cruise is engaged, it is safe to do so, and it is permitted by state and local laws.

NOT FOR RESALE

⚠ Warning

To prevent serious injury or death, be alert and pay special attention when passing highway exits, entrances, and crossings with Super Cruise, and be ready to take control of the vehicle when necessary. Changes in lane markings around exits and entrances can momentarily cause Super Cruise to not detect the correct lane. If this occurs, Super Cruise may attempt steering inputs to bring the vehicle back into the correct lane and, in rare circumstances, could over-correct and cause the vehicle to momentarily cross into a lane next to your vehicle unless you manually steer to maintain your lane position.

If equipped, Super Cruise is an advanced driver assistance technology that allows hands-free driving on compatible roads. Additionally, it offers support for trailering, lane changes, and enables a Hands-On Steering Assistance feature across an expanded set of roads. See *Hands-On Steering Assist (Lane Centering Assistance)* ⇨ *242*. Super Cruise works with Adaptive Cruise Control to maintain vehicle set speed and following distance. The Driver Attention System monitors your head pose and eye gaze to ensure you're paying attention to the road. The Driver Attention System does not record or save video.

Super Cruise is designed to operate only when:

- The vehicle has an active Connected Service plan through OnStar.
- Adaptive Cruise Control is engaged. See *Adaptive Cruise Control (Advanced)* ⇨ *231*.
- The Driver Attention System detects the driver's head and eyes are directed toward the road ahead.
- The driver's seat belt is buckled.
- The lane markings are clearly visible and detectable by the system.
- The outside temperature is not too cold (i.e., not below 15° F (-9° C)).
- The vehicle speed is less than approximately 85 mph (137 km/h).
- Teen Driver, if equipped, is not active.
- The camera and radar sensors are functioning and not covered, obstructed, or damaged.
- Adjustable Ride Height, if equipped, must be at Normal ride height.
- There are no other conditions preventing the system from working properly.

When Super Cruise is unavailable, a message will display with the reason. See "Super Cruise Message Summary" later in this section.

You may also press and hold on the steering wheel to have the system display the unavailability message.

Engaging Super Cruise

⚠ Warning

Super Cruise is a driver assistance system and cannot accurately detect or predict all situations. Super Cruise is not a crash avoidance system. To prevent serious injury or death, you must supervise the driving task and monitor the road conditions. You may need to respond to traffic events by steering, braking, or accelerating. See *Defensive Driving* ⇨ *191*. Super Cruise also cannot determine whether you are awake, asleep, impaired, or properly focused on safe driving. The vehicle could crash into other vehicles, drive

(Continued)

NOT FOR RESALE

Warning (Continued)

out of the lane, or drive off the road. Complete attention is always required while driving, even while using Super Cruise. Be prepared to take over steering or apply the brakes at any time.

Warning

Super Cruise may not begin steering immediately, even when Super Cruise is available and has been pressed. To prevent serious injury or death, only remove your hands from the steering wheel if the steering wheel lightbar, the Super Cruise light, and the Adaptive Cruise Control (ACC) light are green.

1. Make sure the vehicle is on and Adaptive Cruise Control is enabled. You will see one of two icons: a white illuminated or a green illuminated with the set speed limit. If you do not see either of these, press on the steering wheel.
2. Press on the steering wheel to enable Super Cruise.
3. Set the desired vehicle speed using the SET+/RES– button.

The system automatically engages the appropriate level of assistance based on availability and operating conditions. There are three possible assistance levels:

Adaptive Cruise Control: When Adaptive Cruise Control is engaged, appears green in the instrument cluster. See *Adaptive Cruise Control (Advanced)* ➪ *231*.

Hands-On Steering Assist: If enabled, when the vehicle is centered in the lane, and displays green in the instrument cluster, the vehicle provides steering assistance to help keep itself centered in the lane. When this feature is engaged, you must keep your hands on the steering wheel. To view available settings from the infotainment app screen, select Settings > Vehicle > Lane Centering Assistance.

See *Hands-On Steering Assist (Lane Centering Assistance)* ➪ *242*.

Super Cruise Hands-Free: When the vehicle is centered in the lane, displays green in the instrument cluster, and the steering wheel light bar turns green, you may take your hands off the steering wheel. This is the only level that allows for hands-free driving.

Adaptive Cruise Control, Hands-On Steering Assist, and Super Cruise, will remain enabled the next time you start the vehicle.

Lane Changes

Warning

To help prevent crashes before making a lane change:

- Always check mirrors.
- Glance over your shoulder.
- Use the turn signals.

Warning

Super Cruise Lane Change may not detect a vehicle in an adjacent lane. Always supervise the driving task and monitor traffic conditions when using the Super Cruise Lane Change feature. Only request a lane change when traffic conditions are safe for a lane change, and always be ready to manually steer the vehicle.

NOT FOR RESALE

Super Cruise allows for manual, automatic, or turn signal activated lane changes. Automatic and turn signal activated lane changes are only available in Super Cruise hands-free functionality. Super Cruise Lane Change functionality may be disabled when a trailer or other accessories (e.g. bike rack, cargo tray, etc.) are detected. Do not use Super Cruise Lane Change when towing a trailer.

To view the available settings, from the infotainment app screen, touch Settings > Vehicle > Super Cruise Lane Change.

Automatic Lane Changes

Automatic lane changes are initiated by the system under the following conditions to:

- pass a slower vehicle.
- merge out of a lane that is ending.
- allow space for other vehicles to merge from a highway entrance ramp.
- follow a route set on the built-in navigation system. See *General Towing Information* ➪ *306*.

To cancel an automatic lane change, activate the turn signal lever or steer manually.

Automatic Lane Change is not available when a construction zone is detected.

Turn Signal Activated Lane Changes

To initiate this type of lane change:

1. Ensure the adjacent lane is clear of traffic.
2. Activate the turn signal in the direction you want to go.
3. The system will steer the vehicle to perform the lane change.

To cancel a turn signal activated lane change, disengage the turn signal lever or steer manually.

Trailer Towing With Super Cruise

Super Cruise may be used when towing a trailer when the attached trailer is within size and weight limits designated in the Trailer Towing section. See *General Towing Information* ➪ *306*.

When Super Cruise is used with vehicles equipped with aftermarket trailer brake controller, disengage Super Cruise before applying the manual trailer brake. Super Cruise will not automatically disengage when manual trailer brake is applied.

Super Cruise can recognize when the vehicle is pulling a trailer and adjusts the following gap for extra stopping distance. Automatic and turn signal activated lane changes are disabled for safety while trailering.

Stationary or Very Slow-Moving Objects; Cross-Traffic

⚠ Warning

Super Cruise is not a crash avoidance system and will not steer or brake to avoid a crash. Super Cruise does not steer to prevent a crash with stopped or slow-moving vehicles. You must supervise the driving task and may need to steer and brake to prevent a crash, especially in stop-and-go traffic or when a vehicle suddenly enters your lane. Always pay attention when using Super Cruise. Failure to do so could result in a crash involving serious injury or death.

NOT FOR RESALE

Curves in the Road

⚠ Warning

The vehicle could drift out of your lane of travel. To prevent crashes, always be ready to manually steer. Super Cruise may not detect your lane on curves in the road. Super Cruise may not detect the markings that show your lane. You may not have time to react to a vehicle in the lane next to your vehicle while on curves in the road. Super Cruise may hand control back to the driver more often driving around a sharp curve while towing a trailer.

Super Cruise may operate differently in sharp curves. It may drift out of your lane of travel if the curve is too sharp.

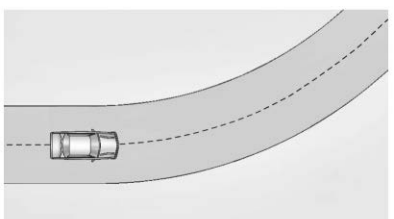

When entering a curve, Super Cruise may not detect the lane markings and may not adjust the steering enough to stay in your lane of travel. When this happens, you will need to steer the vehicle.

Super Cruise may detect other lane markings that are not in your lane and may or may not steer appropriately to maintain your lane.

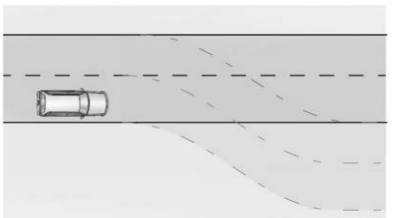

Super Cruise may occasionally provide an alert and/or steering that is considered unnecessary. It could respond to lane markings in different lanes, signs, guardrails, and other stationary objects when entering or exiting a curve. This is normal operation. The vehicle does not need service.

Other Vehicles Entering Your Lane

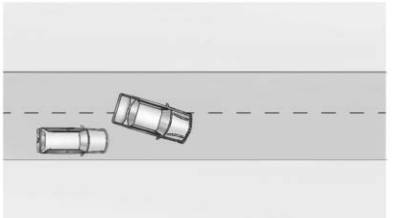

Super Cruise may not detect a vehicle that enters your lane, or may not brake fast enough to avoid a crash. You must manually brake and steer the vehicle.

Intersections and Vehicles Crossing the Road Ahead

Super Cruise will not brake the vehicle when approaching an intersection that is controlled by a traffic light or stop sign. Super Cruise will not detect vehicles crossing the road ahead, including at intersections, and will not automatically steer or brake to prevent a collision. You must manually brake and steer the vehicle.

NOT FOR RESALE

Super Cruise on Hills

Do not use Super Cruise while driving on steep hills.

Disengaging Super Cruise

To cancel or turn off Super Cruise in your vehicle, you can use one of the following methods:

- Press on the steering wheel to disengage Super Cruise.
- Press the brake pedal to disengage Super Cruise and Adaptive Cruise Control.
- Turn Adaptive Cruise Control off. This also disengages Super Cruise.

Super Cruise Status and Lightbar

Warning

Super Cruise will not maintain the vehicle's speed while the steering wheel lightbar is flashing red. If the steering wheel lightbar flashes red, immediately resume manual steering to prevent serious injury or death. If you do not resume manual steering, the vehicle will begin to slow in the same lane and eventually come to a complete stop on the road.

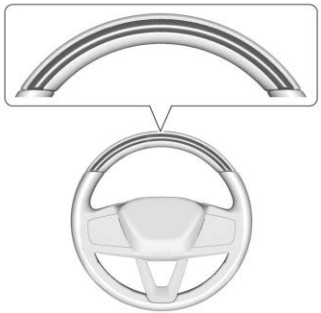

NOT FOR RESALE

Driver Assistance Levels and Display Indicators in Increasing Order of Assistance

Driver Assistance Feature	Instrument Cluster Light and Color	Steering Wheel Lightbar	Status of Driver Assistance Feature
Adaptive Cruise Control, if equipped	White	Off	Adaptive Cruise Control is enabled and in standby mode.
	Green	Off	Adaptive Cruise Control is actively controlling your speed and maintaining an appropriate and preselected following distance with the lead vehicle.
	Blue	Off	Adaptive Cruise Control was overridden and will not brake nor maintain following distance.

NOT FOR RESALE

Driver Assistance Feature	Instrument Cluster Light and Color	Steering Wheel Lightbar	Status of Driver Assistance Feature
Hands-On Steering Assist (Lane Centering), if equipped	White	Off	Hands-On Steering Assist is enabled but not actively providing lane centering steering assistance.
	Green	Off	Hands-On Steering Assist is actively providing lane centering steering assistance.
	Flashing Green	Off	Hands-On Steering Assist has detected your hands are not on the steering wheel or you are not paying sufficiently close attention to the road.

NOT FOR RESALE

Driver Assistance Feature	Instrument Cluster Light and Color	Steering Wheel Lightbar	Status of Driver Assistance Feature
Hands-On Steering Assist (Lane Centering), if equipped (Continued)	Red or Flashing Red	Off	Hands-On Steering Assist is prompting you to take full manual control of steering immediately. If you fail to immediately resume full manual steering control, the system will disengage.
Hands-Free Super Cruise, if equipped	White	Off	Hands-Free Super Cruise is enabled and in standby mode.
	Green	Green	Hands-Free Super Cruise is actively steering your vehicle. Pay attention to the road and vehicle operation. Do not take your hands off the wheel until the steering wheel lightbar is solid green.

NOT FOR RESALE

Driver Assistance Feature	Instrument Cluster Light and Color	Steering Wheel Lightbar	Status of Driver Assistance Feature
Hands-Free Super Cruise, if equipped (Continued)	Green	Flashing Green	Hands-Free Super Cruise has detected you are not paying sufficiently close attention to the road. Pay attention to the road ahead. The steering wheel lightbar will flash green as well.
	Red	Flashing Red	Take over steering immediately. Hands-Free Super Cruise will disengage if you fail to take over steering. The steering wheel lightbar will flash red.

When Super Cruise is Steering

When the vehicle is positioned in the center of the lane, the steering wheel light bar and will turn green, indicating Super Cruise is steering the vehicle.

When Super Cruise controls the steering, traffic and other conditions and laws permit, and it is safe to do so, your hands can be taken off the steering wheel.

Always pay attention to the road and the operation of the vehicle. Always monitor and be attentive of surrounding traffic, including vehicles that may cross the road in front of your vehicle.

NOT FOR RESALE

Cooperative or Manual Steering

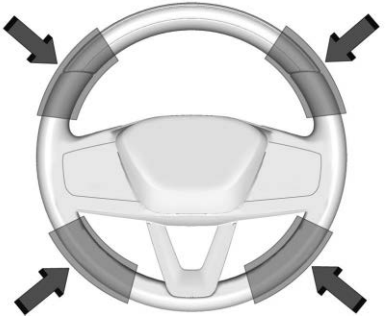

Super Cruise steering can be overridden with manual steering at any time. To begin steering manually, hold the steering wheel firmly with both hands using the steering wheel sensor locations shown.

You can adjust vehicle position within the lane by cooperatively steering the vehicle. If you steer out of the lane, the system will disengage.

When ready to allow Super Cruise to resume steering again, position the vehicle in the center of the lane, hold the steering wheel until the steering wheel light bar turns green, and then release the steering wheel when it is safe to do so.

Escalation Requiring Driver To Take Control of the Steering Wheel

When you are required to take control of the steering wheel, , and the steering wheel lightbar will turn red, and a message will display in the Driver Information Center. When you begin steering manually, Super Cruise will disengage.

In addition, audible alerts will sound, or the Safety Alert Seat will vibrate, if equipped. To view collision and detection settings, from the infotainment app screen, touch Settings > Vehicle > Collision/Detection Systems.

The red flashing steering wheel light bar could occur under any of the following conditions:

- The lane markings are poor, or visibility is limited.
- The Driver Attention System does not detect that the driver's head and eyes are directed toward the road ahead.
- Adaptive Cruise Control is cancelled.
- The vehicle is on a tight curve, the lane is too wide, or the vehicle enters a curve too quickly.
- The Super Cruise enabled road ends.
- The vehicle is approaching an intersection controlled by a traffic light, stop sign, or other traffic control device.
- A Super Cruise system fault occurs.
- Super Cruise is unable to complete a lane change maneuver.
- Super Cruise detects that the outside temperature is too cold to operate correctly.
- The driver's seatbelt becomes unbuckled.

The system will be locked out if driver does not take control of the vehicle when prompted. The system may be disabled for short duration. If the driver repeatedly does not take control of the vehicle when prompted, the system will be disabled until the vehicle is turned off and back on.

NOT FOR RESALE

Super Cruise Message Summary

Subscription Required - Press OnStar Button	• The owner's required Connected Services subscription may have ended. • Press the Blue OnStar button in your vehicle to speak with an OnStar representative, who can help determine the issue and what actions to take
Unavailable Turn on Adaptive Cruise Control	Adaptive Cruise Control must be on before Super Cruise can be enabled. • Set speed is not required before enabling Super Cruise. • Adaptive Cruise Control is not required to be engaged before enabling Super Cruise.
Unavailable Lane Ending	Super Cruise is disabled because the driving lane is ending.
Unavailable No Road Information	• There is no map information available for that portion of the road. Recent road reconstruction may turn off Super Cruise for that section of road until new map information is available. • The vehicle is not on the correct type of road. A controlled access freeway or compatible divided or non-divided road is required for Super Cruise. • There are lanes entering or exiting on both the left and right side of the road.
Unavailable Sensors Can't Find Lane Lines	• Rain or snow is inhibiting the system's ability to see lane lines. • Direct sunlight is on the front camera at dawn or dusk. • There are missing or poor lane line markings on the road. • There is sun glare on the road surface. • There is heavy rain, puddles, road spray, or inclement weather conditions that are affecting system performance.

NOT FOR RESALE

Unavailable Sensor Can't See Face Clearly	• Sun is shining into the Driver Attention System camera. • Dawn or dusk sun glare is on the driver's face. • Cups, food, hands, or other objects are obscuring the Driver Attention System view of the driver's face. • The steering column is pointed too high or low for the Driver Attention System to see the driver. Adjust the steering column or the seat if the message occurs frequently.
Unavailable Looking Away From Road for Too Long	The Driver Attention System detects that the driver is not looking at the road.
Unavailable Driving Too Fast	The vehicle is traveling faster than 137 km/h (85 mph). The maximum Super Cruise speed in curves will vary based on how sharp the curve is. The vehicle will automatically decrease speed if needed.
Unavailable Driving in Exit Lane	The Super Cruise system has detected that the vehicle is in an exit lane.
Unavailable GPS Signal Lost	• There is poor reception in isolated areas. • Reception is being blocked by buildings or other large structures.
Unavailable You Have Taken Vehicle Control	• The brake pedal is being pressed. • Adaptive Cruise Control has been canceled or turned off.
Unavailable Sensor Blocked	Clear snow, ice, dirt, or other contaminants from the front and rear areas of the vehicle.
Unavailable Sharp Curve	Some curves are too sharp to be navigated by the Super Cruise system. Super Cruise will be available after the curve is traveled.

NOT FOR RESALE

Unavailable Over Weight Limit	Super Cruise has detected that the trailer is over the allowable weight limit.
Unavailable Trailer Too Unstable	Super Cruise has detected that the attached trailer is causing an unstable condition. Check the trailer and/or load.
Unavailable Trailer Too Large	Trailer size (length/width) is larger than supported for Super Cruise operation.
Unavailable Lane Too Narrow	Super Cruise has detected that the lane width ahead is too narrow for Super Cruise operation while towing a trailer.
Super Cruise Unavailable	Super Cruise is unavailable for reasons not described in other messages.
Super Cruise Locked Out See Owner's Manual	The driver did not take control of the vehicle when prompted by the Super Cruise system. The Super Cruise system will be disabled until the vehicle is turned off and back on.
Unavailable Seat Belt Not Fastened	The driver seat belt is not fastened.
Unavailable Teen Driver Mode Active	Teen Driver mode is engaged.
Unavailable Snow Mode	A snow plow is attached.
Unavailable Unsupported Intersection	Super Cruise has detected an unsupported intersection.
Unavailable Approaching Toll Booth	Super Cruise has detected that there is a toll booth ahead.

NOT FOR RESALE

Unavailable Ride Height Out of Range	The vehicle ride height is out of Super Cruise operational range.
Caution Construction Zone - Drive With Care	Super Cruise has detected a construction zone.

Map Updates

Super Cruise relies on precise LIDAR based maps, these are often called High Definition (HD) Maps. These HD Maps are regularly updated by GM and sent to your vehicle. This will happen automatically as your vehicle is driven. This will not require any user input. If there is any issue with these HD Map updates, a Service Driver Assist error message will be displayed. If this message is displayed, please contact an authorized GM Service Center.

Connectivity

An active Connected Service plan that includes Super Cruise Services is required to use Super Cruise and Hands-On Steering Assist. If the vehicle is equipped with OnStar and has an active service plan, additional data may be collected through the OnStar system. This includes information about: the vehicle's operation; a crash involving the vehicle; the use of the vehicle and its features; and, in certain situations, the location and approximate GPS speed of the vehicle. Refer to the OnStar Terms and Conditions and Privacy Statement on the OnStar website.

For additional information on Hands-On and Hands-Free driving, see https://www.onstar.com/services/super-cruise-hands-free-driving.

Location Services

This setting enables or disables location services for OnStar. If you disable location services, GM may still collect vehicle location information from the vehicle in the event of an emergency (such as in the event of a crash, when the emergency call button is pressed, or where there is overheating of a high voltage battery).

System Care

Caution

The Super Cruise system is a highly sophisticated system and should only be serviced by technicians with the proper training, tools, and safety instructions, which your dealer has. Without proper training and tools the vehicle may become damaged.

The camera on the steering column has a lens cover that may become dirty over time and affect camera performance. Clean the lens cover with a soft cloth sprayed with glass cleaner. Wipe the lens gently, then dry it. Never use abrasive cloths/cleaners or corrosive chemicals of any kind on the lens cover.

NOT FOR RESALE

Super Cruise uses the front radar, front camera, rear radar, and 360-degree cameras for its operation. Clean surfaces are required for Super Cruise operation. See *Adaptive Cruise Control (Advanced)* ➪ *231*, *Surround Vision System* ➪ *273*, and *Lane Keep Assist (LKA)* ➪ *301* for care information.

Advanced Driver Assistance Systems

This vehicle may have features that work together to help avoid crashes or reduce crash damage while driving, backing, and parking. Read this entire section before using these systems.

⚠ Warning

Do not rely on the Driver Assistance Systems. These systems do not replace the need for paying attention and driving safely. You may not hear or feel alerts or warnings provided by these systems. Failure to use proper care when driving may result in injury, death, or vehicle damage. See *Defensive Driving* ➪ *191*.

(Continued)

Warning (Continued)

Under many conditions, these systems will not:

- Detect children, pedestrians, bicyclists, or animals.
- Detect vehicles or objects outside the area monitored by the system.
- Work at all driving speeds.
- Warn you or provide you with enough time to avoid a crash.
- Work under poor visibility or bad weather conditions.
- Work if the detection sensor is not cleaned or is covered by ice, snow, mud, or dirt.
- Work if the detection sensor is covered up, such as with a sticker, magnet, or metal plate.
- Work if the detection sensor viewing zone is interrupted by an installed accessory, such as a bike rack, or hitch mounted cargo carrier.

(Continued)

Warning (Continued)

- Work if the area surrounding the detection sensor is damaged or not properly repaired.

Complete attention is always required while driving, and you should be ready to take action and apply the brakes and/or steer the vehicle to avoid crashes.

⚠ Warning

Stickers or accessories attached on or around the front or rear fascia of your vehicle can impair the radar sensors resulting in vehicle damage or personal injury. Your vehicle could brake suddenly. Do not attach anything on or around the front or rear fascia, including the license plate, the bumper, or the grille. Use only GM genuine accessories.

NOT FOR RESALE

Audible or Safety Alert Seat

Some driver assistance features alert the driver of obstacles by sounding an audible alert. To view available settings from the infotainment app screen, touch Settings > Vehicle > Comfort and Convenience.

If equipped with the Safety Alert Seat, the driver seat cushion may provide a vibrating pulse alert instead of an audible alert. To view available settings from the infotainment app screen, touch Settings > Vehicle > Collision/ Detection Systems.

Cleaning

Depending on vehicle options, keep these areas of the vehicle clean to ensure the best driver assistance feature performance. Driver Information Center messages may display when the systems are unavailable or blocked.

- Front and rear bumpers and the area below the bumpers
- Front grille and headlights
- Front camera lens in the front grille or near the front emblem
- Front side and rear side panels
- Outside of the windshield in front of the rearview mirror
- Side camera lens on the bottom of the outside mirrors
- Rear side corner bumpers
- Rear Vision Camera above the license plate

Assistance Systems for Parking or Backing

If equipped, the Rear Vision Camera, Rear Park Assist, Front and Rear Park Assist, Surround Vision, Reverse Automatic Braking and Backing Warning System, Rear Cross Traffic Alert, and Enhanced Automatic Parking Assist may help the driver park or avoid objects. Always check around the vehicle when parking or backing.

NOT FOR RESALE

Rear Vision Camera (RVC)

⚠ Warning

The camera(s) do not display children, pedestrians, bicyclists, crossing traffic, animals, or any other object outside of the cameras' field of view, below the bumper, or under the vehicle. Shown distances may be different from actual distances. Do not drive or park the vehicle using only these camera(s). Always check behind and around the vehicle before driving. Failure to use proper care may result in injury, death, or vehicle damage.

When the vehicle is shifted into R (Reverse), the Rear Vision Camera displays an image of the area behind the vehicle in the infotainment display. The previous screen displays when the vehicle is shifted out of R (Reverse) after a short delay. To return to the previous screen sooner, press Home or Back on the infotainment system, shift into P (Park), or reach a vehicle speed of approximately 12 km/h (8 mph) while in D (Drive). The rear vision camera is above the license plate.

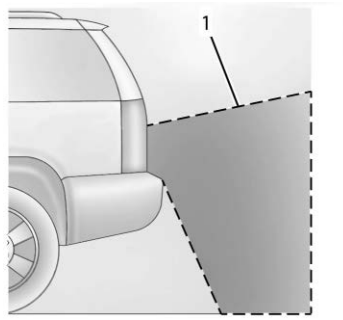

1. View Displayed by the Camera

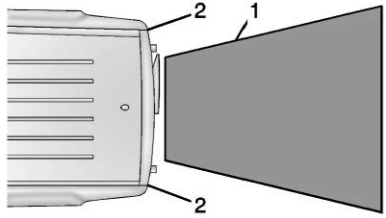

1. View Displayed by the Camera
2. Corners of the Rear Bumper

Displayed images may be farther or closer than they appear. The area displayed is limited and objects that are close to either corner of the bumper or under the bumper do not display.

A warning triangle may display to show that Rear Park Assist or Rear Cross Traffic Alert has detected an object. This triangle changes from amber to red and increases in size the closer the object.

Surround Vision System

If equipped the Surround Vision system can display various views surrounding the vehicle in the infotainment display. See below for camera view descriptions and more information.

Your vehicle may be equipped with views specific to trailering. For more information, see *General Towing Information* ➪ *306*.

⚠ Warning

The Surround Vision cameras have blind spots and will not display all objects near the corners of the vehicle. Folding outside mirrors that are out of position may not

(Continued)

NOT FOR RESALE

Warning (Continued)

display surround view correctly. Always check around the vehicle when parking or backing.

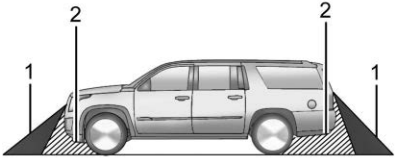

1. Views Displayed by the Surround Vision Cameras
2. Area Not Shown

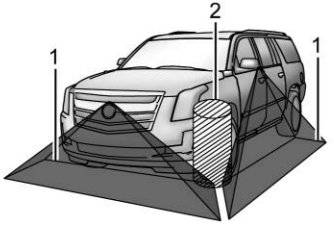

1. Views Displayed by the Surround Vision Cameras
2. Area Not Shown

⚠ Warning

The camera(s) do not display children, pedestrians, bicyclists, crossing traffic, animals, or any other object outside of the cameras' field of view, below the bumper, or under the vehicle. Shown distances may be different from actual distances. Do not drive or park the vehicle using only these camera(s). Always check behind and around the vehicle before driving. Failure to use proper care may result in injury, death, or vehicle damage.

Camera Views

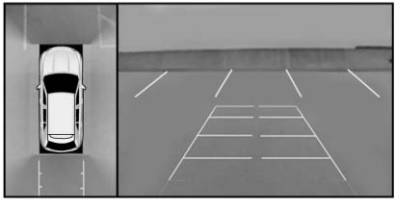

Touch the camera view buttons on the infotainment display to access each view (if equipped):

- Front/Rear Standard View

  Displays an image of the area in front or behind the vehicle. To select, touch Front/Rear Standard View on the infotainment display when a camera view is active.

  When the hitch guidance is selected, Rear Standard View will remain visible across gear changes, otherwise the view will toggle between Front and Rear Standard View based on gear position. If equipped,

NOT FOR RESALE

the Front Standard View also displays when the Park Assist system detects an object in front of the vehicle.

To access the Rear Standard View, select CAMERA on the infotainment display and select Rear Standard View. The view can be closed by selecting X, Home, or Back on the infotainment display.

- Front/Rear Top-Down View

  Displays a front or rear overhead view of the vehicle. To view, select Front/Rear Top-Down View on the infotainment display when the camera app is active.

- Front/Rear Side View

  Displays a view that shows objects next to the front or rear sides of the vehicle. To select, touch Front/Rear Side View on the infotainment display when a camera view is active. Touch the button to toggle between front and rear camera views. Park Assist and Rear Cross Traffic Alert overlays are not available when Front/Rear Side View is active.

- Hitch View

  Displays a zoomed-in view of the hitch area to assist with aligning the vehicle's hitch ball with the trailer coupler and monitoring the trailer connection. To view, select Hitch View on the infotainment display when a camera view is active. The view can be closed by selecting X, Home, or Back on the infotainment display. Shifting into P (Park) while in this view will automatically engage the Electric Parking Brake (EPB).

- Surround View

  Touch the Surround View icon to enable or disable the view. Displays an image of the area surrounding the vehicle. Surround View is displayed alongside the currently selected view.

- Camera App Guidance Lines

  The Camera App supports three possible guidance modes: No Guidance, Vehicle Guidance and Trailering Guidance. To change guidance mode, select the appropriate guidance icon. Depending on the guidance mode and view selected, different guidance lines may appear. A grayed-out icon indicates that guidance lines are not available. Certain views do not support Guidance lines.

  - Standard Guidance Lines are available in Front/Rear Standard Views, Front/Rear Top-Down Views and Surround View when the vehicle guidance mode is selected. Standard Guidance Lines show current and intended vehicle path.

⚠ Warning

Use Hitch Guidance only to help back the vehicle to a trailer hitch or, when traveling above 12 km/h (8 mph), to briefly check the status of your trailer. Do not use for any other purpose, such as making lane change decisions. Before making a lane change, always check the mirrors and glance over your shoulder. Improper use could result in serious injury to you or others.

  - Hitch Guidance Line is available in Rear Standard View when the Trailering Guidance mode is selected. Hitch Guidance displays a single centered guidance line on the infotainment display to assist with aligning the vehicle's hitch with a trailer coupler. Align the Hitch Guidance Line with the trailer coupler

NOT FOR RESALE

by continuously steering the vehicle to keep the guidance line centered on the coupler when backing. Park Assist overlays will not display when the Hitch Guidance Line is active.

- Cabin Glance

  If equipped, displays a live feed of the seating area on the infotainment screen. This view is used to monitor the occupants of the vehicle without needing to turn around. The video is real-time only and is not recorded or stored.

Park Assist

⚠ Warning

The Park Assist System is no substitute for careful and attentive driving. The Park Assist system does not detect children, pedestrians, bicyclists, animals, or objects located below the bumper or that are too close or too far from the vehicle. It is not available at speeds greater than 9 km/h (6 mph). To prevent injury, death, or vehicle damage, even with Park Assist, always

(Continued)

Warning (Continued)

check the area around the vehicle and check all mirrors before moving forward or backing.

The vehicle may be equipped with Rear Park Assist or Front and Rear Park Assist. Under certain conditions, the Park Assist system can assist the driver during backing and parking maneuvers when the vehicle is driven at no more than 9 km/h (6 mph). An illuminated indicator in the Park Assist button indicates the system is ready.

Sensors located in the bumpers measure the distance between the vehicle and objects using sonar technology. These sensors are designed to detect certain objects up to 1.8 m (6 ft) behind and 1.3 m (4 ft) in front of your vehicle that are taller than 25 cm (10 in).

Different environmental conditions may affect whether and how far the Park Assist system can detect objects. Keep the sensors clean of mud, dirt, snow, ice, and slush; and clean sensors after a car wash in freezing temperatures. Sensors that are not clean may not detect objects or may cause the system to alert when not required.

How the System Works

The vehicle may have a Park Assist amphitheatre-like display on the cluster with bars that represent the estimated location of a detected object and the vehicle's distance from the object. As a detected object becomes closer, more bars light up and change color from yellow to amber to red. Vehicles equipped with Rear Park Assist will show the amphitheater at the rear of the vehicle, and if equipped, Front and Rear Park Assist will show the amphitheater at the front and rear.

The system warns the driver with audible alerts against potentially hazardous obstacles in the path of the vehicle. When an object in the driving path is first detected in the rear, one audible alert will be heard from the rear, or the driver's seat will pulse two times if equipped with Safety Alert Seat. When an object is very close, five audible alerts will sound from the front or rear, depending on the object's location, or the driver's seat will pulse five times. Audible alerts for front are higher pitched than the rear. The audible alerts may be muted by pressing the on screen mute button.

NOT FOR RESALE

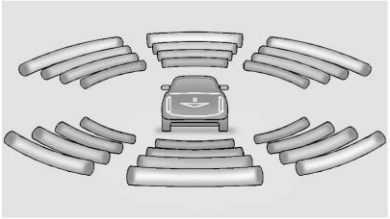

Turning the System On and Off

The Park Assist System can be turned on or off using the infotainment system. To view available settings for this feature, touch the Settings icon on the infotainment app screen. Select “Vehicle” to display the list of available options and select “Collision/ Detection Systems”.

Turning the Park Assist System on or off also turns the Backing Warning and Reverse Automatic Braking on or off at the same time.

When the system is off, PARK ASSIST OFF is shown on the display. This message disappears after a short period of time.

If the vehicle has a trailer hitch attached, select ON - ATTACHED using the infotainment system menus to allow Park Assist to function properly. Park Assist is able to compensate for a trailer hitch up to 0.3 m (1 ft) in length and width. Park Assist may not function properly with larger trailer hitches and provide inaccurate information of objects in the rear

Turn off Park Assist when towing a trailer to prevent unwanted audible alerts and when a bike rack is attached to ensure proper operation.

When the System Does Not Seem to Work Properly

The following messages may be shown on the display:

SERVICE PARK ASSIST

If this message displays, check the following conditions:

- The sensors may not be clean. Keep the vehicle's front and rear bumpers free of mud, dirt, snow, ice, and slush. For cleaning instructions, see *Exterior Care* ➪ *384*.
- The Park Assist sensors may be covered by frost or ice. Frost or ice can form around and behind the sensors and may not always be seen; this can occur after washing the vehicle in cold weather. The message may not clear until the frost or ice has melted.

If this message displays and the above conditions do not exist, take the vehicle to your dealer for repair.

PARK ASSIST OFF

If the Park Assist System does not activate due to a temporary condition, this message is shown on the display. This can occur under the following conditions:

- The driver has disabled the system.
- An object is currently blocking the rear sensors (for example, bike rack, tailgate, trailer hitch, etc.) Once the object is removed, Park Assist will return to normal operation.
- The bumper is damaged. Take the vehicle to your dealer for repairs.
- Other conditions, such as vibrations from a jackhammer or the compression of air brakes on a very large truck, are affecting system performance.

NOT FOR RESALE

Automatic Parking Assist (APA)

Automatic Parking Assist (Automatic Parking Assist)

⚠ Warning

APA may not always detect objects in the parking space, objects that are not rigid (e.g. shrubs and chain-link fences), objects below the bumper, objects high off the ground (e.g. flatbed trucks), hanging objects, objects below ground level (e.g. large potholes), or moving objects (e.g. pedestrians, cyclists, vehicles). Always verify that the parking space is appropriate for parking a vehicle. APA may not respond to changes in the parking space, such as movement of an adjacent vehicle, or a person or object entering the parking space. APA does not detect or avoid traffic that is behind or alongside of the vehicle. Always be prepared to stop the vehicle during the parking maneuver.

If equipped, under certain conditions Automatic Parking Assist can use sensors to detect a parking spot, and, under the supervision of the driver, automatically park or unpark the vehicle. The vehicle will control gear selection, steering, acceleration, and braking, at or near idle speeds. The driver must always be prepared to apply braking, as needed. A display and audible alerts help to guide the parking maneuvers.

How to Activate Automatic Parking

To activate Automatic Parking Assist, press P on the infotainment screen, or P on the instrument panel. While driving forward at no greater than 30 km/h (18 mph), the system searches for parking spots, within the detection range, to the left or right of the vehicle. To search for a parking space to the left, turn on the left turn signal or, if available, change the side selection in the infotainment display. To choose or change the parking mode, make a selection on the infotainment display.

Automatic Parking Assist cannot park in all empty parking spots. The parking spot must:

- Be sufficiently large to fit the vehicle comfortably.
- Have an adjacent vehicle, wall, or pillar for the system to align to.
- Not be too steep.

After completely passing an eligible parking spot, an audible alert sounds and a notification to stop the vehicle is displayed in the Driver Information Center. Generally, Automatic Parking Assist selects the nearest empty parking spot behind the vehicle, but under some conditions may select a space that is further back. Slow down and bring the vehicle to a complete stop to begin.

Follow the displayed instructions. When the vehicle is ready to begin the maneuver, the steering wheel will vibrate briefly as a reminder to remove hands from the steering wheel. After the vibration stops, check your surroundings and release the brakes to begin automatic parking. As the vehicle maneuvers into the parking spot, continue to check your surroundings. Be prepared to stop to avoid vehicles, pedestrians, or objects.

A progress bar displays the status of the parking maneuver. Once automatic parking is finished and the vehicle has come to a full stop, Automatic Parking Assist will provide an audible alert and display a message indicating parking is complete.

NOT FOR RESALE

How to Activate Automatic Unparking

To activate Automatic Parking Assist, turn the vehicle on and leave it in P (Park), then press P AUTO on the infotainment screen or the P AUTO button on the instrument panel. A screen will display with unparking options. Like automatic parking, follow the displayed instructions and continue to check your surroundings, being prepared to brake to avoid vehicles, pedestrians, or objects.

Once automatic unparking is finished and the vehicle has come to a full stop, Automatic Parking Assist will display a message requesting the driver to take control. Press the brakes and take control of the vehicle to drive away.

How to Cancel Automatic Parking/Unparking

To cancel automatic parking or automatic unparking at any time, press P AUTO or X on the infotainment display. Be prepared to resume full control of the vehicle. Automatic Parking Assist holds the vehicle until the parking brake or brake is applied, or the vehicle is shifted into P (Park). To start driving away, press the brakes and shift into D (Drive).

Certain vehicle conditions and driver interferences may also cancel automatic parking:

- The driver manually steers the vehicle.
- The driver shifts gears.
- The driver presses the accelerator pedal.
- There is a failure with the Automatic Parking Assist system.
- The Electronic stability control or antilock brakes are activated.
- The parking brake is applied.
- The driver unbuckles the seat belt and opens the door.

System Limitations

Automatic Parking Assist has certain limitations. The system cannot:

- Detect whether a parking space is legal or restricted.
- Detect pavement markings or lines.
- Park in an angled spot.
- Park exactly centered in a very large spot.
- Park in a very narrow spot.
- Always detect short curbs.
- Operate while towing any trailer.
- Operate with certain rear-mounted accessories, such as bike racks.
- Operate on a steep grade.
- Park the vehicle front first.

Remote Auto Parking

If equipped, the vehicle can complete the same parking and unparking maneuvers as in vehicle Automatic Parking Assist while the driver supervises from outside the vehicle using the myCadillac app. The driver must always be prepared to cancel the automatic maneuver if necessary.

Warning

When using the remote parking feature, stay within a short distance and visually monitor the vehicle until parking is complete. Do not leave the vehicle unsupervised during remote parking.

How to Activate Remote Auto Parking

To activate remote parking, press P on the infotainment screen or the P button on the instrument panel. While driving forward at no

NOT FOR RESALE

greater than 30 km/h (18 mph), Automatic Parking Assist searches for parking spots within the detection range on the left or right side of the vehicle. To search for a parking space to the left, turn on the left turn signal or, if available, change the side selection in the infotainment display. To choose or change the parking spot type, make a selection on the infotainment display.

Remote parking cannot park in all empty parking spots. The parking spot must:

- Be sufficiently large to fit the vehicle comfortably.
- Not be too steep.

When driving past an eligible parking spot, an audible alert sounds and a notification to stop the vehicle is displayed in the Driver Information Center. Generally, Automatic Parking Assist selects the nearest empty parking spot behind the vehicle, but under some conditions may select a space that is further back. Slow down and bring the vehicle to a complete stop to begin.

Follow the instructions on the infotainment screen. Select the option to supervise the maneuver remotely. When prompted, exit the vehicle. Press and hold the P AUTO button on the myCadillac app to complete the operation. As the vehicle maneuvers into the parking spot, continue to check your surroundings, being prepared to cancel the maneuver to avoid vehicles, pedestrians, or objects.

Once remote parking is finished and the vehicle has come to a full stop, a message will be displayed indicating parking is complete. The vehicle will turn off and doors will lock.

How to Activate Remote Unparking

To activate remote unparking, open the myCadillac app and navigate to the remote parking menu. Follow the displayed instructions, select the appropriate unparking type, and press and hold the P AUTO button. As the vehicle maneuvers out of the parking spot, continue to check your surroundings, being prepared to cancel the maneuver to avoid vehicles, pedestrians, or objects.

Once automatic unparking is finished and the vehicle has come to a full stop, a message will be displayed indicating unparking is complete. Enter the vehicle and take control to drive away.

How to Cancel Remote Automatic Parking or Automatic Unparking

To cancel automatic parking or automatic unparking, press the cancel button on the myCadillac app at any time. Remote parking applies the parking brake and shifts into P (Park).

Reverse Automatic Braking (RAB)

Backing Warning and Reverse Automatic Braking

⚠ Warning

The Reverse Automatic Braking System does not detect children, pedestrians, bicyclists, animals, or objects below the bumper or that are too close or too far from the vehicle. In some situations, such as at higher backing speeds, there may not be enough time for the short, sharp application of the vehicle brake system to occur.

It may not avoid many types of backing crashes. Do not wait for the automatic braking to apply. This system is not

(Continued)

NOT FOR RESALE

Warning (Continued)

designed to replace driver braking and only works in R (Reverse) when an object is detected directly behind the vehicle. It may not brake or stop in time to avoid a crash. It will not brake for objects when the vehicle is moving at very low speeds. The system will not work correctly under poor visibility or bad weather conditions, such as rain or snow.

To prevent injury, death, or vehicle damage, always check the area around the vehicle and check all mirrors before backing.

Caution

There may be instances where unexpected or undesired automatic braking occurs. If this happens, either press the brake pedal or firmly press the accelerator pedal to release the brakes. Before releasing the brakes, check the Rear Vision Camera and check the area around the vehicle to make sure it is safe to proceed.

If equipped and enabled, when in R (Reverse), Backing Warning alerts of rear objects at vehicle speeds greater than 8 km/h (5 mph). Reverse Automatic Braking may automatically brake hard at speeds between 1–32 km/h (0.5–20 mph).

The Backing Warning System will sound an audible alert once from the rear when an object is first detected, or pulse twice on both sides of the Safety Alert Seat. When the system detects a potential crash, audible alerts will be heard from the rear, or five pulses will be felt on both sides of the Safety Alert Seat. There may also be a brief, sharp application of the brakes.

When the vehicle is in R (Reverse), if the system detects the vehicle is backing too fast to avoid a crash with a detected object behind your vehicle in your path, it may automatically brake hard to a stop to help avoid or reduce the harm caused by a backing crash.

To view available settings from the infotainment app screen, touch Settings > Vehicle > Collision/Detection Systems.

Pressing the brake pedal after the vehicle comes to a stop will release Reverse Automatic Braking. If the brake pedal is not pressed soon after the stop, the electric parking brake may be set. When it is safe, press the accelerator pedal firmly at any time to override Reverse Automatic Braking.

Unexpected braking events are possible with a static installed accessory, such as a bike rack or hitch-mounted cargo carrier.

Rear Pedestrian Alert

⚠ Warning

Rear Pedestrian Alert does not automatically brake the vehicle. It also does not provide an alert unless it detects a pedestrian, and it may not detect all pedestrians if:

- The pedestrian is not directly behind the vehicle, fully visible to the Rear Vision Camera (RVC), or standing upright.
- The pedestrian is part of a group.
- The pedestrian is a child.
- Visibility is poor, including nighttime conditions, fog, rain, or snow.
- The RVC is blocked by dirt, snow, or ice.

(Continued)

NOT FOR RESALE

Warning (Continued)

- The RVC, taillights, or back-up lights are not cleaned or in proper working condition.
- The vehicle is not in R (Reverse).

To help avoid death or injury, always check for pedestrians around the vehicle before backing up. Be ready to take action and apply the brakes. See *Defensive Driving* ⇨ *191*. Keep the RVC, taillights, and back-up lights clean and in good repair.

If equipped, and under certain conditions, this feature can provide alerts for a pedestrian within the system's range directly behind the vehicle. This feature only works in R (Reverse) below 12 km/h (8 mph), and detects pedestrians up to 8 m (26 ft) away during daytime driving. During nighttime driving, feature performance is very limited.

Rear Pedestrian Alert Indicator

When a pedestrian is detected within the system's range directly behind the vehicle, this symbol flashes amber on the infotainment display, along with seven audible alerts from the rear, or if equipped, two pulses from both sides of the driver seat. When a pedestrian is detected close to the vehicle, the symbol flashes red on the infotainment display, along with ten audible alerts from the rear, or if equipped, seven pulses from both sides of the driver seat.

Rear Pedestrian Alert can be set to Off or Alert. To view available settings from the infotainment screen, touch Settings > Vehicle > Collision/Detection Systems.

If equipped, alerts can be set to audible alerts or seat pulses. To view available settings from the infotainment screen, touch Settings > Vehicle > Collision/Detection Systems > Alert Type.

Rear Cross Traffic Alert (RCTA) System

⚠ Warning

Rear Cross Traffic Alert (RCTA) is an assistance feature only. It does not replace safe, attentive driving. To prevent property damage, injury, or death, always check your surroundings and use your mirrors before backing up. Do not rely solely on RCTA to warn of potential collisions. RCTA only operates while the vehicle is in R (Reverse) in a limited speed range. RCTA may not:

- Detect all vehicles, pedestrians, bicyclists, animals, or objects too close or too far from the vehicle.
- Detect an object if it is partially blocked by an adjacent vehicle or other objects.
- Detect an object when weather limits visibility, such as in fog, rain, or snow.

(Continued)

NOT FOR RESALE

Warning (Continued)

- Operate when the sensors in the left or right corners of the rear bumper are covered with mud, dirt, snow, slush, ice, etc.
- Operate when a trailer or rear-mounted accessory, such as a bike rack or hitch-mounted cargo carrier, are attached to the vehicle.

If equipped, Rear Cross Traffic Alert displays a red warning triangle with a left or right pointing arrow on the infotainment display to warn of traffic coming from the left or right. When an object is detected, either three audible alerts sound from the left or right, or three Safety Alert Seat pulses occur on the left or right side, depending on the direction of the detected vehicle.

Use caution while backing up when towing a trailer, as the Rear Cross Traffic Alert detection zones that extend out from the back of the vehicle do not move farther back when a trailer is attached to the vehicle.

Rear Cross Traffic Braking (RCTB)

⚠ Warning

Rear Cross Traffic Braking (RCTB) is an assistance feature only. It does not replace safe, attentive driving. To prevent property damage, injury, or death, always check your surroundings and use your mirrors before backing up. Do not rely solely on RCTB to prevent collisions.

RCTB only operates while the vehicle is in R (Reverse) in a limited speed range.

RCTB may not:

- Detect all vehicles, pedestrians, bicyclists, animals, or objects too close or too far from the vehicle.
- Detect an object if it is partially blocked by an adjacent vehicle or other objects.
- Detect an object when weather limits visibility, such as in fog, rain, or snow.
- Operate when the sensors in the left or right corners of the rear bumper are covered with mud, dirt, snow, slush, ice, etc.

(Continued)

Warning (Continued)

- Operate when a trailer or rear-mounted accessory, such as a bike rack or hitch-mounted cargo carrier, are attached to the vehicle.

RCTB may automatically brake the vehicle suddenly in situations where it is unexpected and undesired. It could respond to guardrails, signs, heavy rain or snow and other non-moving objects. To override RCTB, firmly press the accelerator pedal, if it is safe to do so.

If equipped and enabled, under certain conditions, RCTB may detect objects approaching from the left or right side of the rear of the vehicle. When an approaching object is detected, RCTB displays a red warning triangle with a left- or right-pointing arrow on the infotainment display, and either three audible alerts sound from the, or three pulses occur of the Safety Alert Seat in the direction of the detected object.

RCTB may apply the brake to bring the vehicle to a stop if a collision is imminent. Once stopped, the system may engage the Electric

NOT FOR RESALE

Parking Brake (EPB) to hold the vehicle. Release the EPB or press the accelerator pedal to continue driving, if it is safe to do so.

Driving With a Trailer

Use caution while backing up when towing a trailer. Rear Cross Traffic Alert and Rear Cross Traffic Braking are automatically disabled when a trailer is attached to the vehicle.

Turning the Features On or Off

Rear Cross Traffic Alert and Rear Cross Traffic Braking can be turned on or off using the infotainment system. To view available settings from the infotainment app screen, touch Settings > Vehicle > Collision/ Detection Systems.

Assistance Systems for Driving

If equipped, when driving the vehicle in a forward gear, Forward Collision Alert, Front Pedestrian Braking, Lane Keep Assist, Side Blind Zone Alert, Night Vision System, Lane Change Alert, and/or Automatic Emergency Braking can help to avoid a crash or reduce crash damage.

Forward Collision Alert (FCA) System

If equipped, the Forward Collision Alert system may help to avoid or reduce the harm caused by front-end crashes. When approaching a vehicle ahead too quickly, it provides a red flashing alert on the windshield and a rapid audible alert or pulses the driver seat. Forward Collision Alert also lights an amber visual alert if following another vehicle much too closely.

Forward Collision Alert detects vehicles within a distance of approximately 60 m (197 ft) and operates at speeds above 8 km/h (5 mph). If the vehicle has Adaptive Cruise Control, it can detect vehicles to distances of approximately 110 m (360 ft) and operates at all speeds. See *Adaptive Cruise Control (Advanced)* ⇨ *231*.

⚠ Warning

FCA is a warning system and does not apply the brakes. When approaching a slower-moving or stopped vehicle ahead too rapidly, or when following a vehicle too closely, FCA may not provide a warning

(Continued)

Warning (Continued)

with enough time to help avoid a crash. It also may not provide any warning at all. FCA does not warn of pedestrians, animals, signs, guardrails, bridges, construction barrels, or other objects. Be ready to take action and apply the brakes. See *Defensive Driving* ⇨ *191*.

Forward Collision Alert can be disabled through vehicle settings. To view available settings from the infotainment app screen, touch Settings > Vehicle > Collision/ Detection Systems.

Detecting the Vehicle Ahead

Forward Collision Alert warnings will not occur unless the system detects a vehicle ahead. When a vehicle is detected, the vehicle ahead indicator will display green. Vehicles may not be detected on curves, highway exit ramps, or

NOT FOR RESALE

hills, due to poor visibility; or if a vehicle ahead is partially blocked by pedestrians or other objects. Forward Collision Alert will not detect another vehicle ahead until it is completely in the driving lane.

Warning

FCA does not provide a warning to help avoid a crash, unless it detects a vehicle. FCA may not detect a vehicle ahead if the FCA sensor is blocked by dirt, snow, or ice, or if the windshield is damaged. It may also not detect a vehicle on winding or hilly roads, or in conditions that can limit visibility such as fog, rain, or snow, or if the headlights or windshield are not cleaned or in proper condition. Keep the windshield, headlights, and FCA sensors clean and in good repair.

Collision Alert

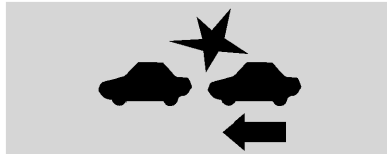

With Head-Up Display

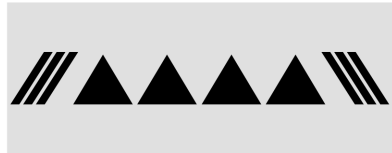

Without Head-Up Display

When your vehicle approaches another detected vehicle too rapidly, the red Forward Collision Alert display will flash on the windshield. Also, eight rapid high-pitched audible alerts will sound from the front, or both sides of the Safety Alert Seat will pulse five times. When this Collision Alert occurs, the brake system may prepare for driver braking to occur more rapidly which can cause a brief, mild deceleration. Continue to apply the brake pedal as needed.

Tailgating Alert

The vehicle-ahead indicator will display amber when you are following a vehicle ahead much too closely.

Selecting the Alert Timing

The Collision Alert control is on the steering wheel. Press to set the Forward Collision Alert timing to Far, Medium, or Near. The first button press shows the current setting on the DIC. Additional button presses will change this setting. The chosen setting will remain until it is changed and will affect the timing of both the Collision Alert and the Tailgating Alert features. The timing of both alerts will vary based on vehicle speed. The faster the vehicle speed, the

NOT FOR RESALE

farther away the alert will occur. Consider traffic and weather conditions when selecting the alert timing. The range of selectable alert timing may not be appropriate for all drivers and driving conditions.

If your vehicle is equipped with Adaptive Cruise Control, changing the Forward Collision Alert timing setting automatically changes the Adaptive Cruise Control following gap setting (Far, Medium, or Near).

Following Distance Indicator

If equipped, the following distance to a moving vehicle ahead in your path is indicated in following time in seconds on the Driver Information Center. See *Driver Information Center (DIC)* ➪ *132*. The minimum following time is 0.5 seconds away. If there is no vehicle detected ahead, or the vehicle ahead is out of sensor range, dashes will be displayed.

Unnecessary Alerts

Forward Collision Alert may provide unnecessary alerts for turning vehicles, vehicles in other lanes, objects that are not vehicles, or shadows. These alerts are normal operation and the vehicle does not need service.

Cleaning the System

If the Forward Collision Alert system does not seem to operate properly, this may correct the issue:

- Clean the outside of the windshield in front of the rearview mirror.
- Clean the entire front of the vehicle.
- Clean the headlights.

For cleaning instructions, see "Washing the Vehicle" under *Exterior Care* ➪ *384*.

System operation may also be limited under snow, heavy rain, or road spray conditions.

Automatic Emergency Braking (AEB)

If equipped, the Automatic Emergency Braking system may help avoid or reduce the harm caused by front-end crashes. Automatic Emergency Braking also includes Intelligent Brake Assist. When the system detects a vehicle ahead in your path that is traveling in the same direction that you may be about to crash into, it can provide a boost to braking or automatically brake the vehicle. This can help avoid or lessen the severity of crashes when driving in a forward gear. Depending on the situation, the vehicle may automatically brake moderately or hard. Always wear a seat belt and ensure that all passengers are properly restrained. This Automatic Emergency Braking can only occur if a vehicle is detected. This is shown by the Forward Collision Alert vehicle ahead indicator being lit. See *Forward Collision Alert (FCA) System* ➪ *284*.

The system works when driving in a forward gear above 4 km/h (2 mph). It can detect vehicles up to approximately 60 m (197 ft).

⚠ Warning

AEB is an emergency crash preparation feature and is not designed to avoid crashes. Do not rely on AEB to brake the vehicle. AEB will not brake outside of its operating speed range and only responds to detected vehicles.

AEB may not:

- Detect a vehicle ahead on winding or hilly roads.
- Detect all vehicles, especially vehicles with a trailer, tractors, muddy vehicles, etc.

(Continued)

NOT FOR RESALE

Warning (Continued)

- Detect a vehicle when weather limits visibility, such as in fog, rain, or snow.
- Detect a vehicle ahead if it is partially blocked by pedestrians or other objects.

Complete attention is always required while driving, and you should be ready to take action and apply the brakes and/or steer the vehicle to avoid crashes.

Automatic Emergency Braking may slow the vehicle to a complete stop to try to avoid a potential crash. If this happens, Automatic Emergency Braking may engage the electric parking brake to hold the vehicle at a stop. Release the electric parking brake or firmly press the accelerator pedal.

⚠ Warning

AEB may automatically brake the vehicle suddenly in situations where it is unexpected and undesired. It could respond to a turning vehicle ahead, guardrails, signs,

(Continued)

Warning (Continued)

and other non-moving objects. To override AEB, firmly press the accelerator pedal, if it is safe to do so.

Intelligent Brake Assist

Intelligent Brake Assist may activate when the brake pedal is applied quickly by providing a boost to braking based on the speed of approach and distance to a vehicle ahead.

Minor brake pedal pulsations or pedal movement during this time is normal and the brake pedal should continue to be applied as needed. Intelligent Brake Assist will automatically disengage only when the brake pedal is released.

⚠ Warning

IBA may increase vehicle braking in situations when it may not be necessary. You could block the flow of traffic. If this occurs, take your foot off the brake pedal and then apply the brakes as needed.

Automatic Emergency Braking and Intelligent Brake Assist can be disabled through vehicle personalization. To view available settings for this feature, touch the Settings icon on the infotainment app screen. Select “Vehicle” to display the list of available options and select “Collision/Detection Systems”.

A system unavailable message may display if:

- The front of the vehicle or windshield is not clean.
- Heavy rain or snow is interfering with object detection.
- There is a problem with the StabiliTrak/ Electronic Stability Control system.

The Automatic Emergency Braking system does not need service.

Intersection Automatic Emergency Braking System

⚠ Warning

I-AEB is an emergency crash preparation feature. Do not rely on I-AEB to brake or avoid crashes. I-AEB will not brake outside

(Continued)

NOT FOR RESALE

Warning (Continued)

of its operating speed range and only responds to detected intersecting vehicles. I-AEB may not:

- detect a crossing or oncoming vehicle on winding or hilly roads.
- detect all vehicles, especially vehicles with a trailer, tractors, muddy vehicles, etc.
- detect a vehicle when weather limits visibility, such as in fog, rain, or snow.
- detect a vehicle ahead if it is partially blocked by pedestrians or other objects.

Complete attention is always required while driving, and you should be ready to take action and apply the brakes and/or steer the vehicle to avoid crashes.

If equipped, the Intersection Automatic Emergency Braking system may help avoid or reduce the harm caused by front-end crashes with crossing vehicles.

The system works when driving in a forward gear above 15 km/h (9 mph) and less than 80 km/h (50 mph). It can detect oncoming vehicles up to approximately 60 m (197 ft).

Vehicle Crossing the Path Ahead

When there is a crossing vehicle detected approaching from the right or the left side that may lead to a collision, Intersection Automatic Emergency Braking provides a red flashing alert on the windshield and a rapid audible alert or pulses the Safety Alert Seat. See *Advanced Driver Assistance Systems* ⇨ *271*. Intersection Automatic Emergency Braking can provide a boost to braking or automatically brake the vehicle.

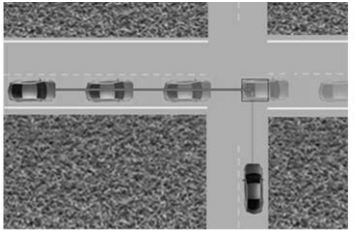

Intersection Automatic Emergency Braking can be set to Off, Alert, or Alert and Brake. To view available settings from the infotainment screen, touch Settings > Vehicle > Collision/ Detection Systems.

Crossing Traffic Alert

When your vehicle approaches an intersecting vehicle too rapidly and there is risk of a collision, a red warning graphic will flash on the windshield. Also, eight rapid high-pitched audible alerts will sound, or the driver seat will pulse five times. The side of the seat that is pulsed and the location of the audible alerts will depend on the direction that the intersecting vehicle is detected from. When this collision alert occurs, the brake system may prepare for driver braking to occur more rapidly which can cause a brief, mild deceleration. Continue to apply the brake pedal as needed.

With Head-Up Display

NOT FOR RESALE

Without Head-Up Display

Turning Across Oncoming Traffic Alert

When your vehicle approaches another detected vehicle too rapidly, a red graphic will flash on the windshield. Also, eight rapid high-pitched audible alerts will sound from the front, or both sides of the Safety Alert Seat will pulse five times. When this Collision Alert occurs, the brake system may prepare for driver braking to occur more rapidly which can cause a brief, mild deceleration. Continue to apply the brake pedal as needed.

With Head-Up Display

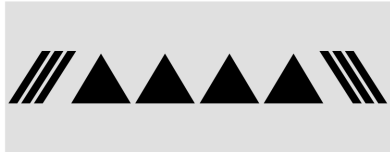

Without Head-Up Display

Automatic Braking

⚠ Warning

I-AEB may automatically brake or increase vehicle braking in situations when it may not be necessary or desired. Your vehicle could block the flow of traffic. I-AEB may respond to stationary or parked vehicles, signs, and other non-moving objects. To override AEB, firmly press the accelerator pedal, if it is safe to do so.

⚠ Warning

Using I-AEB while towing a trailer could cause you to lose control of the vehicle and crash. Turn the system to Alert or Off when towing a trailer.

If Intersection Automatic Emergency Braking detects it is about to crash into an intersecting vehicle, and the brakes have not been applied, it may automatically brake moderately or hard. This can help to avoid some crashes or lessen impact by reducing the speed of the vehicle. Always wear a seat belt and check that all passengers are properly restrained. Intersection Automatic Emergency Braking can automatically brake between 15 km/h (9 mph) and 80 km/h (50 mph). Automatic braking levels may be reduced under certain conditions, such as higher speeds.

Intersection Automatic Emergency Braking may slow the vehicle to a complete stop to try to avoid a potential crash. If this happens, Intersection Automatic Emergency Braking may engage the electric parking brake to hold the vehicle at a stop. Release the electric parking brake or firmly press the accelerator pedal to continue driving.

Intersection Automatic Emergency Braking may also apply the brakes automatically when there is an intersecting vehicle at risk of collision and the system determines that the driver is not braking with sufficient force.

NOT FOR RESALE

Minor brake pedal pulsations or pedal movement during this time is normal and the brake pedal should continue to be applied as needed.

Cleaning the System

If Intersection Automatic Emergency Braking does not seem to operate properly, cleaning the outside of the windshield in front of the rearview mirror may correct the issue.

Front Pedestrian Braking (FPB) System

⚠ Warning

FPB does not provide an alert or automatically brake the vehicle, unless it detects a pedestrian or bicyclist. FPB may not detect pedestrians, including children, or bicyclists:

- When the pedestrian or bicyclist is not directly ahead, fully visible, or standing upright, or when part of a group.

(Continued)

Warning (Continued)

- Due to poor visibility, including nighttime conditions, fog, rain, or snow.
- If the FPB sensor is blocked by dirt, snow, or ice.
- If the headlights or windshield are not cleaned or in proper condition.

Be ready to take action and apply the brakes. For more information, see *Defensive Driving* ➪ *191*. Keep the windshield, headlights, and FPB sensor clean and in good repair.

If equipped, the Front Pedestrian Braking system may help avoid or reduce the harm caused by front-end crashes with nearby pedestrians when driving in a forward gear. Front Pedestrian Braking displays an amber indicator, 🚶, when a nearby pedestrian is detected ahead. When approaching a detected pedestrian too quickly, Front Pedestrian Braking provides a red flashing alert on the windshield and a rapid audible alert or pulses the driver seat. Front Pedestrian Braking can provide a boost to braking or automatically brake the vehicle. This system includes Intelligent Brake Assist, and the Automatic Emergency Braking system may also respond to pedestrians. Always wear a seat belt and ensure that all passengers are properly restrained. See *Automatic Emergency Braking (AEB)* ➪ *286*.

The Front Pedestrian Braking system can detect and alert to pedestrians in a forward gear at speeds between 8 km/h (5 mph) and 80 km/h (50 mph). During daytime driving, the system detects pedestrians up to a distance of approximately 40 m (131 ft). During nighttime driving, system performance is very limited. If equipped, during nighttime driving, the Night Vision system can detect and alert to pedestrians when the vehicle is in a forward gear. See *Night Vision System* ➪ *292*.

Front Pedestrian Braking can be set to Off, Alert, or Alert and Brake through vehicle settings. To view available settings from the infotainment screen, touch Settings > Vehicle > Collision/ Detection Systems.

NOT FOR RESALE

Detecting the Pedestrian Ahead

Front Pedestrian Braking alerts and automatic braking will not occur unless the system detects a pedestrian. When a pedestrian that may enter the vehicle's forward path is detected, the pedestrian ahead indicator will display amber.

Front Pedestrian Alert

With Head-Up Display

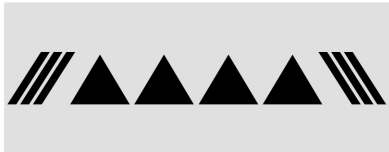

Without Head-Up Display

When the vehicle approaches a pedestrian ahead too rapidly, the red Front Pedestrian Braking alert display will flash on the windshield. Eight rapid high-pitched audible alerts will sound from the front, or both sides of the Safety Alert Seat will pulse five times. When this Pedestrian Alert occurs, the brake system may prepare for driver braking to occur more rapidly which can cause a brief, mild deceleration. Continue to apply the brake pedal as needed. Cruise control may be disengaged when the Front Pedestrian Alert occurs.

Automatic Braking

⚠ Warning

FPB may alert or automatically brake the vehicle suddenly in situations where it is unexpected and undesired. It could falsely alert or brake for objects similar in shape or size to pedestrians, including shadows. This is normal operation and the vehicle does not need service. To override Automatic Braking, firmly press the accelerator pedal, if it is safe to do so.

If Front Pedestrian Braking detects it is about to crash into a pedestrian directly ahead, and the brakes have not been applied, it may automatically brake moderately or brake hard. This can help to avoid some very low speed pedestrian crashes or reduce pedestrian injury. Front Pedestrian Braking can automatically brake to detected pedestrians between 8 km/h (5 mph) and 80 km/h (50 mph). Automatic braking levels may be reduced under certain conditions, such as higher speeds.

Front Pedestrian Braking may slow the vehicle to a complete stop to try to avoid a potential collision with a pedestrian. If this happens,

NOT FOR RESALE

Automatic Emergency Braking may engage the electric parking brake to hold the vehicle at a stop. Firmly press the accelerator pedal to release Automatic Emergency Braking and the electric parking brake. If equipped, Pedestrians detected by the Night Vision system will not cause automatic braking to occur.

Automatic Braking can be disabled through vehicle settings. To view available settings from the infotainment screen, touch Settings > Vehicle > Collision/Detection Systems > Front Pedestrian Detection.

Cleaning the System

If Front Pedestrian Braking does not seem to operate properly, cleaning the outside of the windshield in front of the rearview mirror may correct the issue.

Night Vision System

⚠ Warning

The Night Vision system does not automatically brake the vehicle. It does not provide alerts unless it detects a pedestrian or large animal. The system may not detect pedestrians, including children, or animals:

- If they are less than 10 m (33 ft) away.
- If they are not directly ahead in the sensor coverage area, fully visible, standing upright, or part of a group.
- If the person or animal is moving too quickly through the field of view, such as a bicyclist.
- If the pedestrian is wearing insulated clothing.
- If headlights are off, except when parked.
- If the outside temperature is above 30 °C (86 °F).
- Due to poor visibility, including in heavy fog, rain, or snow.

(Continued)

Warning (Continued)

- If the sensor is blocked by dirt, snow, rain, or ice.
- When traveling faster than 113 km/h (70 mph).

Be ready to take action and apply the brakes. For more information, see *Defensive Driving* ⇨ *191*. Keep the Night Vision sensor clean and in good repair.

⚠ Warning

The system does not detect all objects or the vehicle distance from objects. The system may not provide a warning with enough time to help avoid a crash.

Caution

Do not use the Night Vision System during heavy precipitation if you are prone to photosensitivity. The image on the Driver Information Center (DIC) may flash or strobe.

NOT FOR RESALE

⚠ Warning

Do not stare at the image while driving as this might cause important objects ahead not to be seen. You could crash, and you or others could be injured.

If equipped, this nighttime feature can alert the driver to pedestrians or large animals beyond the headlight beam more than 25 m (82 ft) away. A thermal image of the view ahead displays and will detect objects when it is dark enough outside. If a pedestrian or large animal is detected, an amber icon displays and will change to red if the vehicle is approaching the pedestrian or animal too quickly.

If equipped, when the Front Pedestrian Braking system is turned on, Night Vision provides a red Head-Up Display (HUD) alert, if equipped, when the system detects that the vehicle is approaching a pedestrian or large animal ahead too quickly. In addition, an audible alert will sound or the Safety Alert Seat pulses, if equipped. See *Front Pedestrian Braking (FPB) System* ➪ *290*.

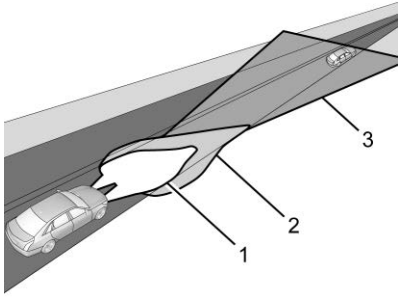

1. Low-Beam Headlights
2. High-Beam Headlights
3. Night Vision System

Select a view on the instrument cluster to display the Night Vision image. See *Instrument Cluster* ➪ *117*. The Night Vision system can detect objects only if:

- The vehicle is on.
- The vehicle is in P (Park) or a forward gear.
- It is dark enough outside.
- The headlights are on, except when parked.

The thermal image is visible during the day, however detections are unavailable. will display on the instrument cluster.

Adjust the instrument panel brightness to make the image no brighter than necessary. Adjust the Night Vision image brightness and contrast by selecting Controls > Night Vision . Turn the image off by selecting another view on the instrument cluster.

Warm objects, such as pedestrians, animals, and other moving vehicles, should appear whiter on the Night Vision display. Cold objects, such as the sky, trees, and parked vehicles, should appear darker. Night Vision only shows objects that are warmer or colder than the surroundings. It does not detect brake lights, turn signals, emergency flashers, traffic lights, or sign information.

When a pedestrian or large animal is detected, an amber box displays around the pedestrian or animal on the Night Vision display and an amber pedestrian icon, , or animal icon, , displays on the instrument cluster. This

NOT FOR RESALE

pedestrian icon is also shown on the Head-Up Display (HUD) , if equipped. When the system detects the vehicle is approaching a pedestrian too quickly, the amber pedestrian icon and box turns red, and a red flashing icon, , displays on the Head-Up Display (HUD), if equipped, with rapid audible alerts or pulsing of the Safety Alert Seat, if equipped.

When the system detects the vehicle is approaching an animal too quickly, the amber animal icon and box turns red, and a red flashing icon, , displays on the Head-Up Display (HUD), if equipped, with rapid audible alerts or pulsing of the Safety Alert Seat, if equipped.

System pedestrian icons, audible alerts, and (if equipped) Safety Alert Seat pulses can be set to Off through vehicle settings by turning off the Front Pedestrian Braking system. To view available settings from the infotainment screen, touch Settings > Vehicle > Collision/Detection Systems > Front Pedestrian Detection.

Pedestrian detection may not be available in high outside temperatures. An icon, , displays. The system does not need service.

In rain, snow, or fog the image may not be clear and the direction of the road ahead may not be seen. In more severe weather conditions, the image may be unclear and unusable. The system does not need service.

Keep the system sensor clean by activating the front window washer five times when it is dark enough for the system to operate. If the Night Vision image still looks blurry, use a soft wet cloth to gently clean the sensor camera lens and dry thoroughly. The sensor is behind the lower front grille below the driver side headlight.

The camera must also be aligned to work correctly. If the camera needs adjustment, see your dealer. Do not attempt to adjust the camera yourself.

If the vehicle displays SERVICE NIGHT VISION, do not attempt to adjust camera yourself. See your dealer.

If the night vision camera gets blocked while driving, the system will attempt to detect the blockage and automatically clean the camera lens. This will happen a maximum of three times per drive. In the event the system cannot clear the blockage the system will display a message on the Driver Information Center saying NIGHT VISION TEMP. UNAVAILABLE. The system does not need service. Please manually clean the lens following the instructions in this section.

Lane Change Alert (LCA)

If equipped, the Lane Change Alert system is a lane-changing aid that can assist drivers with avoiding lane change crashes with moving vehicles in the side blind zone, or blind spot areas or with vehicles rapidly approaching these areas from behind. When a vehicle is detected in the blind zone, the Lane Change Alert warning display will light up in the corresponding side mirror and will flash if the turn signal is on. The Side Blind Zone Alert system is included as part of the Lane Change Alert system.

Warning

LCA does not alert the driver to vehicles outside of the system detection zones, pedestrians, bicyclists, or animals. It may not provide alerts when changing lanes under all driving conditions. Failure to use proper care when changing lanes may

(Continued)

NOT FOR RESALE

Warning (Continued)

result in injury, death, or vehicle damage. Before making a lane change, always check mirrors, glance over your shoulder, and use the turn signals.

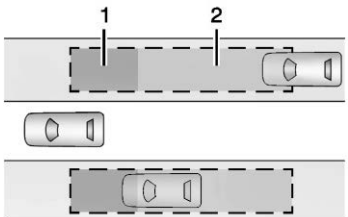

Lane Change Alert Detection Zones

1. Side Blind Zone Alert Detection Zone
2. Lane Change Alert Detection Zone

When towing a trailer, Lane Change Alert feature is disabled. When not towing a trailer, the Lane Change Alert sensor covers a zone of approximately one lane over from both sides of the vehicle, or 3.5 m (11 ft). The height of the zone is approximately between 0.5 m (1.5 ft) and 2 m (6 ft) off the ground. Drivers are also warned of vehicles rapidly approaching this area up to approximately 70 m (230 ft) behind the vehicle.

Trailer Side Blind Zone Area

If equipped, the Trailer Side Blind Zone Alert system is a lane-changing aid that assists drivers with avoiding crashes that occur with moving vehicles in the side blind zone, or blind spot areas. The trailer side blind zone area adds the blind zone area along the side of a trailer that the host vehicle is pulling.

When the vehicle is in a forward gear, the left or right side mirror display will light up if a moving vehicle is detected in that trailer blind zone. If the turn signal is activated and a vehicle is also detected on the same side, the display will flash as an extra warning not to change lanes. Since this system is part of the Lane Change Alert system, read the entire Lane Change Alert section before using this feature.

⚠ Warning

TSBZA does not alert the driver to vehicles outside of the system detection zones, pedestrians, bicyclists, or animals. It may

(Continued)

Warning (Continued)

not provide alerts when changing lanes under all driving conditions. Failure to use proper care when changing lanes may result in injury, death, or vehicle damage. Before making a lane change, always check mirrors, glance over your shoulder, and use the turn signals.

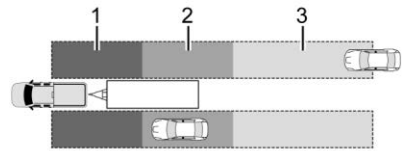

Trailer Side Blind Zone Alert Detection Zones

1. Side Blind Zone Alert Detection Zone
2. Trailer Side Blind Zone Alert Detection Zone
3. Lane Change Alert Detection Zone

The Side Blind Zone Alert warning area starts at approximately the middle of the vehicle and goes back 5 m (16 ft). The Trailer Side Blind Zone Alert warning area starts at approximately 3 m

NOT FOR RESALE

(10 ft) to the trailing edge of the vehicle and goes back up to 21 m (69 ft) behind the vehicle. The maximum trailer length is 12 m (39 ft).

How the System Works

The Lane Change Alert/Trailer Side Blind Zone Alert symbol lights up in the side mirrors when the system detects a moving vehicle in the next lane over that is in the trailer side blind zone. This indicates it may be unsafe to change lanes. Before making a lane change, check the Side Blind Zone Alert display, check mirrors, glance over your shoulder, and use the turn signals.

Left Side Mirror Display

Right Side Mirror Display

When the vehicle is started, both outside mirror Lane Change Alert/Trailer Side Blind Zone Alert displays will briefly come on to indicate the system is operating. When the vehicle is in a forward gear, the left- or right-side mirror display will light up if a moving vehicle is detected in that blind zone. If the turn signal is activated in the same direction as a detected vehicle, this display will flash as an extra warning not to change lanes.

Lane Change Alert/Trailer Side Blind Zone Alert displays may not come on when passing a vehicle quickly, or when passing a stopped vehicle. Lane Change Alert/Trailer Side Blind Zone Alert may alert to objects attached to the vehicle, such as a bicycle, or object extending out to either side of the vehicle or trailer. This is normal system operation; the vehicle does not need service.

Lane Change Alert/Trailer Side Blind Zone Alert can be disabled through vehicle settings. To view available settings from the infotainment screen, touch Settings > Vehicle > Collision/ Detection Systems. If Side Blind Zone Alert is disabled by the driver, the Trailer Side Blind Zone Alert mirror displays will not light up.

When the System Does Not Seem to Work Properly

Lane Change Alert/Trailer Side Blind Zone Alert displays may not come on when passing a vehicle quickly, or when passing a stopped vehicle. The Lane Change Alert/Trailer Side Blind Zone Alert detection zones that extend back from the side of the vehicle do not move further back when a trailer is towed. Use caution while changing lanes when towing a trailer. Lane Change Alert/Trailer Side Blind Zone Alert may alert to objects attached to the vehicle, such as a trailer, bicycle, or object extending out to either side of the vehicle or trailer. This is normal system operation; the vehicle does not need service.

Lane Change Alert/Trailer Side Blind Zone Alert may not always alert the driver to vehicles in the side blind zone, especially in wet conditions. The system does not need to be serviced. The system may light up due to guardrails, signs, trees, shrubs, and other non-moving objects. This is normal system operation; the vehicle does not need service.

Lane Change Alert/Trailer Side Blind Zone Alert may not operate when the Lane Change Alert/ Trailer Side Blind Zone Alert sensors in the left or right corners of the rear bumper are covered with mud, dirt, snow, ice, or slush, or in heavy rainstorms. For cleaning instructions, see "Washing the Vehicle" under *Exterior Care* ⇨ *384*. If the Driver Information Center displays the system unavailable message after cleaning both sides of the vehicle toward the rear corners of the vehicle, see your dealer.

NOT FOR RESALE

If the Driver Information Center displays the system unavailable message after cleaning both sides of the vehicle toward the rear corners of the vehicle, see your dealer

If the Lane Change Alert/Trailer Side Blind Zone Alert displays do not light up when vehicles are in the blind zone and the system is clean, the system may need service. Take the vehicle to your dealer.

When Trailer Side Blind Zone Alert is disabled for any reason other than the driver turning it off, the Trailer Side Blind Zone Alert On option will not be available on the personalization menu.

Driving with a Trailer

Although this system is intended to help drivers avoid lane change crashes, it does not replace driver vision and therefore should be considered a lane change aid. Even with the Trailer Side Blind Zone Alert system, the driver must check carefully for objects outside of the reporting zone (e.g., a fast approaching vehicle) or vehicle along the side of the trailer before changing lanes.

Use caution while changing lanes when towing a trailer.

Side Bicycle Detection

If equipped, the system may detect a bicyclist approaching from the side or rear of the vehicle.

If this occurs, an audible alert will sound in the direction of the detection, and the Safety Alert Seat will pulse if enabled through vehicle settings. To view available settings from the infotainment screen, touch Settings > Vehicle > Collision/Detection Systems.

Bicyclist Detection is available when the vehicle is in D (Drive), P (Park), and for a short time after the vehicle is turned off.

If the vehicle detects a bicyclist when it is off, a Driver Information Center message may display and alert to the direction of the detection. In some cases, an Unavailable message may display. This is normal and does not mean that the system is broken.

Detection Zones

When the vehicle is in P (Park) or is turned off, a bicyclist can be detected 11 m (36 ft) behind the vehicle or 10 m (33 ft) to the side of the vehicle.

When the vehicle is in D (Drive), a bicyclist can be detected 3 m (10 ft) behind the vehicle or to the side of the vehicle.

Turning the Feature On or Off

Bicyclist Detection can be turned on or off through vehicle settings. To view available settings from the infotainment screen, touch Settings > Vehicle > Collision/Detection Systems.

Blind Zone Steering Assist (BZSA)

⚠ Warning

Do not rely on Blind Zone Steering Assist (BZSA) to prevent crashes. This system does not replace the need to pay attention and drive safely. Failure to use proper care when driving may result in vehicle damage, injury, or death.

- BZSA performance may be affected by weather and road conditions.
- BZSA does not provide steering assistance to avoid a vehicle that is in, or has entered, your lane of travel.
- BZSA will not prevent a towed trailer from crossing into the adjacent lane. Always monitor the trailer position

(Continued)

NOT FOR RESALE

Warning (Continued)

while towing to ensure it is in the same lane as your vehicle. BZSA is only designed to detect when your vehicle unintentionally crosses detected lane lines.

If equipped, the Blind Zone Steering Assist system can detect a potential crash with a moving vehicle in the lane you are entering. It provides a brief, urgent turn of the steering wheel to alert you to take action to avoid a collision.

Blind Zone Steering Assist works with Lane Keep Assist and Lane Change Alert. It operates when the vehicle is in a forward gear, and only when Lane Keep Assist and Lane Change Alert are enabled and able to assist. See *Lane Keep Assist (LKA)* ⇨ *301*. See *Lane Change Alert (LCA)* ⇨ *294*.

Blind Zone Steering Assist will provide a steering correction when your vehicle is about to leave the current lane of travel, with the possibility of a collision with a vehicle in the adjacent lane. Unlike Lane Keep Assist, the steering correction with Blind Zone Steering Assist will happen even if your turn signal is on in the direction of lane departure.

In addition to the Blind Zone Steering Assist steering intervention, the will turn amber, six audible alerts or six seat pulses will occur, if equipped with Safety Alert Seat, and or will flash on the outside rear view mirror.

Traffic Sign Assistant

Caution

The system is intended to assist the driver within a defined speed range to discern certain traffic signs. Always pay attention to posted speed limit signs.

Do not ignore traffic signs which are not displayed by the system.

The system does not discern any signs other than the conventional traffic signs that might give or end a speed limit. It may not detect some electronic speed signs.

(Continued)

Caution (Continued)

Depending on the weather conditions or problems with traffic signs, a traffic sign may not be recognized or a sign different from the actual traffic sign may be displayed.

Do not let this special feature tempt you into taking risks when driving.

Always adapt vehicle speed to the road conditions.

Driver assistance systems do not relieve the driver from full responsibility for vehicle operation.

If equipped, Traffic Sign Assistant recognizes designated traffic signs via the front camera located behind the windshield in front of the interior rear view mirror, and displays the detected speed limit in the Driver Information Center. Additionally, speed limit information from the navigation system map database may be used.

Traffic signs that are detected are:

- Speed Limit
- Conditional Signs

NOT FOR RESALE

Display Indication

The currently detected speed limit is displayed in the Driver Information Center and remains displayed until a new speed limit is detected, or an end of speed limit indication is detected. Depending on the vehicle, the current valid speed limit is permanently displayed on the Driver Information Center or in the upper left of the instrument cluster.

A **(--)** symbol in a frame indicates that a speed limit is not available for this road segment.

A **(/)** symbol in a frame indicates that the feature is turned off or has failed.

See *Instrument Cluster* ➪ *117*.

Alert Function

If equipped, an audible alert may sound and the displayed speed sign may flash when you have exceeded the indicated speed limit by a certain amount, or if a new speed limit is detected.

The alert function can be turned on or off. To view available settings from the infotainment screen, touch Settings > Vehicle > Speed Assist.

Each time the vehicle is started, the customization options may be enabled by default.

System Reset

The content of the traffic sign display can be cleared. To view available settings from the infotainment screen, touch Settings > Display > Instrument Cluster.

Upon successful reset, a **(--)** symbol displays until the next traffic sign is detected or provided by the navigation system map data. In some cases, traffic sign memory is cleared automatically by the system.

Alert function will automatically be turned on when the system is reset.

Navigation System Traffic Sign Detection

The currently displayed sign can either originate from sign detection using the camera, or from the navigation system map data. If the currently displayed sign originates from map data and the map information changes, a new sign will be displayed. This may lead to detection of a new sign although no sign on the road may have been passed. If the map data is unavailable, Traffic Sign Assistant will turn off automatically.

Limitations

Traffic sign memory may not operate correctly if:

- The area of the windshield, where the front camera is located, is not clean or is affected by foreign objects, e.g. stickers, window tinting, etc.
- Traffic signs are completely or partially covered, are too low or high or difficult to discern.
- Traffic signs are incorrectly mounted or are damaged.
- Traffic signs do not comply with the approved traffic sign standards.
- The speed limit is displayed by certain types of electronic speed signs.
- There are adverse environmental conditions, e.g. heavy rain, snow, direct sunlight or shadows.
- The headlights are dirty or not correctly aligned when driving at night.
- The navigation map data is out of date.
- The navigation map is unavailable.
- The audio system is not functioning properly.

NOT FOR RESALE

Driver Attention Assist

If equipped, Driver Attention Assist alerts the driver to pay closer attention to the road ahead. Driver Attention Assist uses a camera-based Driver Monitoring System. The Driver Monitoring System on the steering column continually monitors the driver's head movements and eye gaze location to determine if the driver is drowsy or distracted. Depending on the level of the driver's distraction or drowsiness, Driver Attention Assist will provide visual warnings, audible alerts, and Safety Alert Seat vibrations, if equipped, to gently guide the driver to refocus on the driving task.

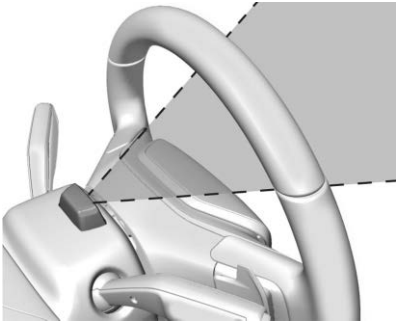

Sunglasses, hats, or other types of clothing that cover head or facial features may interfere with camera performance. To improve camera performance, raise or lower the steering wheel, wear lighter tinted glasses, or change the seat position.

Driver Attention Assist does not record video or audio. It is only active while driving with the feature enabled.

How to Activate Driver Attention Assist

The feature can be enabled or disabled through vehicle settings. To view available settings from the infotainment app screen, select Settings > Vehicle > Driver Attention Assist.

Distracted Driving

When the driver's attention is not on the road, Driver Attention Assist will send visual and audible alerts, or Safety Alert Seat vibrations.

If the driver does not return their attention to the road ahead and displays unresponsive behavior, the system will engage multiple Advanced Driver Assistance Systems, bring the vehicle to a stop. See *Lane Keep Assist (LKA)* ⇨ *301* and *Automatic Emergency Braking (AEB)* ⇨ *286*.

Drowsy Driving

The system monitors the driver for signs of fatigue, such as yawning, slower blinking frequency, or gaze fixation. Driver Attention Assist provides visual and audible alerts, or Safety Alert Seat vibrations. When the system detects that the driver is greatly struggling to stay awake, the alerts will be more intense and frequent. While a driver is detected to be only be drowsy, Driver Attention Assist may activate or adjust settings for Advanced Driver Assistance Systems, even if they have been disabled, only for the duration that the drowsiness is detected. The activated features will revert to their previous selections once the driver is no longer detected to be showing signs of fatigue.

When the maximum drowsiness alert occurs, the driver will be presented with the following options on the infotainment screen:

- Phone a Friend
- Start a Playlist
- Navigate to Nearest Point of Interest

Select an option from the list and follow the instructions displayed on infotainment screen.

NOT FOR RESALE

If the driver's eyes are closed, and they are detected to be asleep, the system will engage multiple Advanced Driver Assistance Systems, bring the vehicle to a stop.

See *Lane Keep Assist (LKA)* ➪ *301* and *Automatic Emergency Braking (AEB)* ➪ *286*.

Cleaning the Camera

The camera lens cover on the steering column may become dirty over time. If this occurs, clean the lens cover with a soft cloth sprayed with glass cleaner. Wipe the lens gently, then dry it. Never use abrasive cloths, cleaners, or corrosive chemicals of any kind on the lens cover.

Limitations

Some factors can impact the performance of the Driver Attention Assist feature, causing it to not to function as intended. These include (but are not limited to):

- Damage to the Driver Monitoring System, camera, or lens.
- The camera being blocked by the steering wheel, hands, or objects.

If there is a problem with the system, a Driver Information Center message or icon in the instrument cluster may display.

Lane Keep Assist (LKA)

⚠ Warning

The LKA system does not continuously steer the vehicle. It may not keep the vehicle in the lane or give a Lane Departure Warning (LDW) alert, even if a lane marking is detected.

The LKA and LDW systems may not:

- Provide an alert or enough steering assist to avoid a lane departure or crash.
- Detect lane markings under poor weather or visibility conditions. This can occur if the windshield or headlights are blocked by dirt, snow, or ice, if they are not in proper condition, or if the sun shines directly into the camera.
- Detect road edges.
- Detect lanes on winding or hilly roads.

(Continued)

Warning (Continued)

If LKA only detects lane markings on one side of the road, it will only assist or provide an LDW alert when approaching the lane on the side where it has detected a lane marking. Even with LKA and LDW, you must steer the vehicle. Always keep your attention on the road and maintain proper vehicle position within the lane, or vehicle damage, injury, or death could occur. Always keep the windshield, headlights, and camera sensors clean and in good repair. Do not use LKA in bad weather conditions.

⚠ Warning

Using LKA while towing a trailer or on slippery roads could cause loss of control of the vehicle and a crash. Turn the system off.

If equipped, Lane Keep Assist may help avoid crashes due to unintentional lane departures. This system uses a camera to detect lane markings. The system can be ready to assist above approximately 50 km/h (31 mph). Lane Keep Assist may assist by

NOT FOR RESALE

gently turning the steering wheel if the vehicle approaches a detected lane marking. It may also provide a Lane Departure Warning alert if the vehicle unintentionally crosses a detected lane marking. Lane Keep Assist will not assist or alert if the turn signal is active in the direction of the lane departure, or if it detects that you are accelerating, braking, or actively steering. Lane Keep Assist can be overridden by turning the steering wheel. If the system detects you are steering intentionally across a lane marker, the Lane Departure Warning may not be given. Do not expect the Lane Departure Warning to occur when you are intentionally crossing a lane marker.

How the System Works

The Lane Keep Assist camera sensor is on the windshield ahead of the rearview mirror.

To turn Lane Keep Assist on and off, press on the instrument panel to the left of the steering wheel.

Lane Keep Assist may not be available in extremely cold temperatures of less than approximately −30° F(−34° C).

When on, is white and changes green if Lane Keep Assist is available to assist and provide Lane Departure Warning alerts. It may assist by gently turning the steering wheel and display as amber if the vehicle approaches a detected lane marking without using a turn signal in that direction. It may also provide an Lane Departure Warning alert by flashing amber as the lane marking is crossed. Additionally, there may be three audible alerts on the right or left, depending on the lane departure direction.

Take Steering

The Lane Keep Assist system does not continuously steer the vehicle. If Lane Keep Assist does not detect active driver steering, an audible alert or Driver Information Center message may be provided. Move the steering wheel to dismiss.

When the System Does Not Seem to Work Properly

The system performance may be affected by:

- Close vehicles ahead.
- Sudden lighting changes, such as when driving through tunnels.
- Banked roads.
- Roads with poor lane markings, such as two-lane roads.

If the Lane Keep Assist system is not functioning properly when lane markings are clearly visible, cleaning the windshield may help.

A system unavailable message may display if the camera is blocked. The Lane Keep Assist system does not need service.

Lane Keep Assist assistance and/or Lane Departure Warning alerts may occur due to tar marks, shadows, cracks in the road, temporary or construction lane markings, or other road imperfections. This is normal system operation; the vehicle does not need service. Turn Lane Keep Assist off if these conditions continue.

Surround Vision Recorder

If equipped, Surround Vision Recorder may record video of the vehicle surroundings continuously, up to two hours, while automatically overwriting the oldest videos to continue recording.

NOT FOR RESALE

When the feature is enabled, the recordings are saved on a USB device with the specifications of:

- 64GB storage capacity, with at least 32GB of storage available.
- A FAT32 file system. MS-DOS (FAT) should be used for Mac.
- USB type C or A.
- USB3.0 or greater.

It is recommended to use a single USB device specifically for Surround Vision Recorder. This device must be plugged into a data-enabled USB port.

Event recording features may be offered after a future software update to your vehicle. When available, you will learn about the new features through the application.

Security Recording

If Security Recording is enabled, the cameras automatically record the vehicle's exterior and, when selected in settings, the interior when the theft alarm is triggered. This recording will be a video of when the alarm becomes activated.

Configuring the System

To access settings, and the recordings playlist, select Recordings on the infotainment app screen.

Always review the settings carefully before use.

Limitations

Certain features may not be available at all locations and under all vehicle conditions. No sound is included in the video footage. Recording will not occur in valet mode or while the vehicle is off.

Features are subject to change. Some features may be enabled with an additional subscription service. You will be informed which features apply after the software update.

When using Surround Vision Recorder, follow all local laws and regulations in your jurisdiction.

Untrusted Media Devices

Do not use untrusted mobile or media devices. They may negatively impact system operation and performance.

Fuel

Top Tier Fuel

GM recommends the use of TOP TIER Approved Gasoline to keep the engine clean, reduce engine deposits, and maintain optimal vehicle performance. Look for the TOP TIER Logo or see www.toptiergas.com for a list of TOP TIER Approved Gasoline marketers and applicable countries.

NOT FOR RESALE

Recommended Fuel

Premium unleaded gasoline meeting ASTM specification D4814 with a posted octane rating (R+M)/2 of 91 or greater is recommended. If unavailable, unleaded gasoline with a posted octane rating of 87 may be used, but will result in reduced performance and driveability. If heavy knocking is heard when using gasoline rated at 91 or greater, the engine needs service.

Do not use any fuel labeled E85 or FlexFuel. Do not use gasoline with ethanol levels greater than 15% by volume.

Prohibited Fuels

Caution

Do not use fuels with any of the following conditions; doing so may damage the vehicle and void its warranty:

(Continued)

Caution (Continued)

- For vehicles which are not FlexFuel, fuel labeled greater than 15% ethanol by volume, such as mid-level ethanol blends (16 – 50% ethanol), E85, or FlexFuel.
- Fuel with any amount of methanol, methylal, and aniline. These fuels can corrode metal fuel system parts or damage plastic and rubber parts.
- Fuel containing metals such as methylcyclopentadienyl manganese tricarbonyl (MMT), which can damage the emissions control system and spark plugs.
- Fuel with a posted octane rating of less than the recommended fuel. Using this fuel will lower fuel economy and performance.

Fuels in Foreign Countries

The U.S., Canada, and Mexico post fuel octane ratings in Anti-Knock Index (AKI). For fuel not to use in a foreign country, see *Prohibited Fuels* ➪ *304*.

Fuel Additives

TOP TIER Approved Gasoline is highly recommended for use with your vehicle. If your country does not have TOP TIER Approved Gasoline, add ACDelco Fuel System Cleaner to the vehicle's gasoline fuel tank at every oil change or 12 000 km (7,500 mi), whichever occurs first. TOP TIER Approved Gasoline and ACDelco Fuel System Cleaner will help keep your vehicle's engine fuel deposit free and performing optimally.

Filling the Tank

An arrow on the fuel gauge indicates which side of the vehicle the fuel door is on. See *Fuel Gauge* ➪ *118*.

⚠ Warning

Fuel vapors and fuel fires burn violently and can cause injury or death.

Follow these guidelines to help avoid injuries to you and others:

- Read and follow all the instructions on the fuel pump island.

(Continued)

NOT FOR RESALE

Warning (Continued)

- Turn off the engine when refueling.
- Keep sparks, flames, and smoking materials away from fuel.
- Do not leave the fuel pump unattended.
- Avoid using electronic devices while refueling.
- Do not re-enter the vehicle while pumping fuel.
- Keep children away from the fuel pump and never let children pump fuel.
- Before touching the fill nozzle, touch a metallic object to discharge static electricity from your body.
- Fuel can spray out if the fill nozzle is inserted too quickly. This spray can happen if the tank is nearly full, and is more likely in hot weather. Insert the fill nozzle slowly and wait for any hiss noise to stop before beginning to flow fuel.

The fuel door unlocks when the vehicle doors are unlocked. See *Remote Key Operation* ➪ *9*.

To open the fuel door, push and release the rearward center edge of the door.

The capless refueling system does not have a fuel cap. Fully insert and latch the fill nozzle, begin fueling.

⚠ Warning

Overfilling the fuel tank by more than three clicks of a standard fill nozzle may cause:

- Vehicle performance issues, including engine stalling and damage to the fuel system.
- Fuel spills.
- Under certain conditions, fuel fires.

⚠ Warning

If a fire starts while you are refueling, do not remove the fill nozzle. Shut off the flow of fuel by shutting off the pump or by notifying the station attendant. Leave the area immediately.

Be careful not to spill fuel. Wait five seconds after you have finished pumping before removing the fill nozzle. Clean fuel from painted surfaces as soon as possible. See *Exterior Care* ➪ *384*. Push the fuel door closed until it latches.

Filling the Tank with a Portable Fuel Container

⚠ Warning

Attempting to refuel from a portable fuel container without using the funnel adapter may cause fuel spillage and damage the capless fuel system. This could cause a fire. You or others could be badly burned and the vehicle could be damaged.

NOT FOR RESALE

If the vehicle runs out of fuel and must be filled from a portable fuel container:

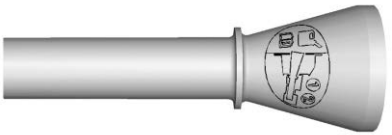

1. Locate the capless funnel adapter.
2. Insert and latch the funnel into the capless fuel system.
3. Remove and clean the funnel adapter and return it to the storage location.

Filling a Portable Fuel Container

⚠ Warning

Never fill a portable fuel container while it is in the vehicle. Static electricity discharge from the container can ignite the fuel vapor. You or others could be badly burned and the vehicle could be damaged. To help avoid injury to you and others:

(Continued)

Warning (Continued)

- Dispense fuel only into approved containers.
- Do not fill a container while it is inside a vehicle, in a vehicle's trunk, in a pickup bed, or on any surface other than the ground.
- Bring the fill nozzle in contact with the inside of the fill opening before operating the nozzle. Maintain contact until filling is complete.
- Keep sparks, flames, and smoking materials away from fuel.
- Avoid using electronic devices while pumping fuel.

Trailer Towing

General Towing Information

⚠ Warning

You can lose control when towing a trailer if the correct equipment is not used or the vehicle is not driven properly. For example, if the trailer is too heavy or the trailer brakes are inadequate for the load, the vehicle may not stop as expected. You and others could be seriously injured. The vehicle may also be damaged, and the repairs would not be covered by the vehicle warranty. Pull a trailer only if all the steps in the Trailer Towing Supplement have been followed. Ask your dealer for advice and information about towing a trailer with the vehicle.

To find detailed preparation information, refer to the Trailer Towing Supplement online at:

For United States: www.cadillac.com/support/vehicle/manuals-guides

For Canada: www.cadillaccanada.ca/en/support/vehicle/manuals-guides

For Mexico: my.gm.com.mx/cadillac/es/ayuda-y-soporte/manual

NOT FOR RESALE

To tow a disabled vehicle, see *Transporting a Disabled Vehicle* ⇨ *380*.

To tow the vehicle behind another vehicle such as a motor home, see *Recreational Vehicle Towing* ⇨ *381*.

Conversions and Add-Ons

Add-On Electrical Equipment

⚠ Warning

The Data Link Connector is used for vehicle service and Emission Inspection/Maintenance testing. See *Malfunction Indicator Light (Check Engine Light)* ⇨ *122*. A device connected to the Data Link Connector — such as an aftermarket fleet or driver-behavior tracking device — may interfere with vehicle systems. This could affect vehicle operation and cause a crash. Such devices may also access information stored in the vehicle's systems.

Caution

Some electrical equipment can damage the vehicle or cause components to not work and would not be covered by the vehicle warranty. Always check with your dealer before adding electrical equipment.

⚠ Warning

Certain mobile radio equipment, like amplifiers and antennas used for two-way communication, can interfere with some vehicle systems. Always ensure this equipment is supplied with proper local grounding. Follow all of the instructions that came with the equipment and see your GM dealer for additional mobile radio installation instructions.

Add-on equipment can drain the vehicle's 12-volt battery, even if the vehicle is not operating.

The vehicle has an airbag system. Before attempting to add anything electrical to the vehicle, see *Servicing the Airbag-Equipped Vehicle* ⇨ *79* and *Adding Equipment to the Airbag-Equipped Vehicle* ⇨ *80*.

NOT FOR RESALE

Vehicle Care

General Information
General Information 309
California Perchlorate Materials Requirements 309
Accessories and Modifications 309

Vehicle Checks
Doing Your Own Service Work 309
Hood 310
Engine Compartment Overview 312
Engine Oil 315
Engine Oil Life System 317
Automatic Transmission Fluid 318
Engine Air Filter Life System 318
Engine Air Cleaner/Filter 318
Cooling System 320
Engine Overheating 322
Engine Fan 324
Washer Fluid 324
Brakes 325
Brake Pad Life System 326
Brake Fluid 326
Battery - North America 327
Four-Wheel Drive 328
Front Axle 329
Rear Axle 329
Park Brake and P (Park) Mechanism Check 329
Wiper Blade Replacement 329
Glass Replacement 330
Windshield Replacement 330
Gas Strut(s) 331

Headlight Aiming
Front Headlight Aiming 332

Bulb Replacement
LED Lighting 332

Electrical System
Electrical System Overload 332
Fuses and Circuit Breakers 333
Engine Compartment Fuse Block 334
Instrument Panel Fuse Block 339
Rear Compartment Fuse Block 343

Wheels and Tires
Tires 345
All-Season Tires 346
Winter Tires 346
Low-Profile Tires 347
Tire Sidewall Labeling 347
Tire Designations 348
Tire Terminology and Definitions 349
Tire Pressure 350
Tire Pressure for High-Speed Operation 352
Tire Pressure Monitor System 353
Tire Pressure Monitor Operation 354
Tire Inspection 357
Tire Rotation 358
When It Is Time for New Tires 359
Buying New Tires 359
Different Size Tires and Wheels 361
Uniform Tire Quality Grading 361
Wheel Alignment and Tire Balance 362
Wheel Replacement 362
Tire Chains and Other Traction Devices 363
If a Tire Goes Flat 363
Tire Changing 365
Full-Size Spare Tire 376

Jump Starting
Jump Starting - North America 377

Towing the Vehicle
Transporting a Disabled Vehicle 380
Recreational Vehicle Towing 381

Appearance Care
Exterior Care 384
Interior Care 389
Floor Mats 392

NOT FOR RESALE

General Information

For service and parts needs, visit your dealer. You will receive genuine GM parts and GM-trained and supported service people.

Genuine GM parts have one of these marks:

California Perchlorate Materials Requirements

Certain types of automotive applications, such as airbag initiators, seat belt pretensioners, and lithium batteries contained in electronic keys, may contain perchlorate materials. Perchlorate Material – special handling may apply. See www.dtsc.ca.gov/hazardouswaste/perchlorate.

Accessories and Modifications

Caution

When adding accessories or other equipment after the purchase of your vehicle, ensure you are not exceeding the vehicle axle weight ratings or overall weight ratings. Overloading the vehicle may cause damage. Repairs would not be covered by the vehicle warranty. Do not overload the vehicle. See *Vehicle Load Limits* ➪ *200* and *General Towing Information* ➪ *306* for those specific weight ratings.

Adding non-GM approved accessories or making modifications to the vehicle can affect vehicle performance and safety, including airbags, braking, stability, ride and handling, emissions systems, aerodynamics, durability, Advanced Driver Assistance Systems, and electronic systems like antilock brakes, traction control, and stability control. These accessories or modifications could cause malfunction or damage not covered by the vehicle warranty.

Damage to suspension components caused by modifying vehicle height outside of factory settings will not be covered by the vehicle warranty.

Damage to vehicle components resulting from modifications or the installation or use of non-GM certified parts, including control module or software modifications, is not covered under the terms of the vehicle warranty and may affect remaining warranty coverage for affected parts.

Also, see *Adding Equipment to the Airbag-Equipped Vehicle* ➪ *80*.

Vehicle Checks

Doing Your Own Service Work

⚠ Warning

It can be dangerous to work on your vehicle if you do not have the proper knowledge, service manual, tools, or parts. Always

(Continued)

NOT FOR RESALE

Warning (Continued)

follow owner's manual procedures and consult the service manual for your vehicle before doing any service work.

Caution

Even small amounts of contamination can cause damage to vehicle systems. Do not allow contaminants to contact the fluids, reservoir caps, or dipsticks.

The proper service manual provides more detail on vehicle service than this manual. To order the proper service manual, see *Publication Ordering Information* ⇨ *415*.

This vehicle has an airbag system. Before attempting to do your own service work, see *Servicing the Airbag-Equipped Vehicle* ⇨ *79*.

If equipped with remote start, open the hatch/trunk before performing any service work to prevent remote starting the vehicle accidentally. See *Remote Start* ⇨ *14*.

Keep a record with all parts receipts and list the mileage and the date of any service work performed. See *Maintenance Records* ⇨ *401*.

Hood

⚠ Warning

For vehicles with auto engine stop/start, turn the vehicle off before opening the hood. If the vehicle is on, the engine will start when the hood is opened. You or others could be injured.

⚠ Warning

Components under the hood can get hot from running the engine. To help avoid the risk of burning unprotected skin, never touch these components until they have cooled, and always use a glove or towel to avoid direct skin contact.

Clear any snow from the hood before opening.

To open the hood:

1. Pull the hood release lever with the symbol. It is on the lower left side of the instrument panel.

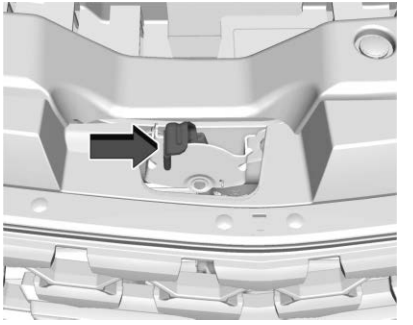

2. Go to the front of the vehicle and locate the secondary release lever under the front center of the hood. Push the secondary hood release lever to the right to release.
3. After you have partially lifted the hood, the gas strut system will automatically lift the hood and hold it in the fully open position.

NOT FOR RESALE

To close the hood:

1. Before closing the hood, be sure all filler caps are on properly, and all tools are removed.
2. Pull the hood down until the strut system is no longer holding up the hood.

⚠ Warning

Do not drive the vehicle if the hood is not latched completely. The hood could open fully, block your vision, and cause a crash. You or others could be injured. Always close the hood completely before driving.

3. Allow the hood to fall. Check to make sure the hood is latched completely. Repeat this process with additional force if necessary.

The Driver Information Center will display a message if the hood is not fully closed, and the vehicle is moving. Stop and turn off the vehicle, check the hood for obstructions, and close the hood again. Check to see if the message still appears on the Driver Information Center.

NOT FOR RESALE

Engine Compartment Overview

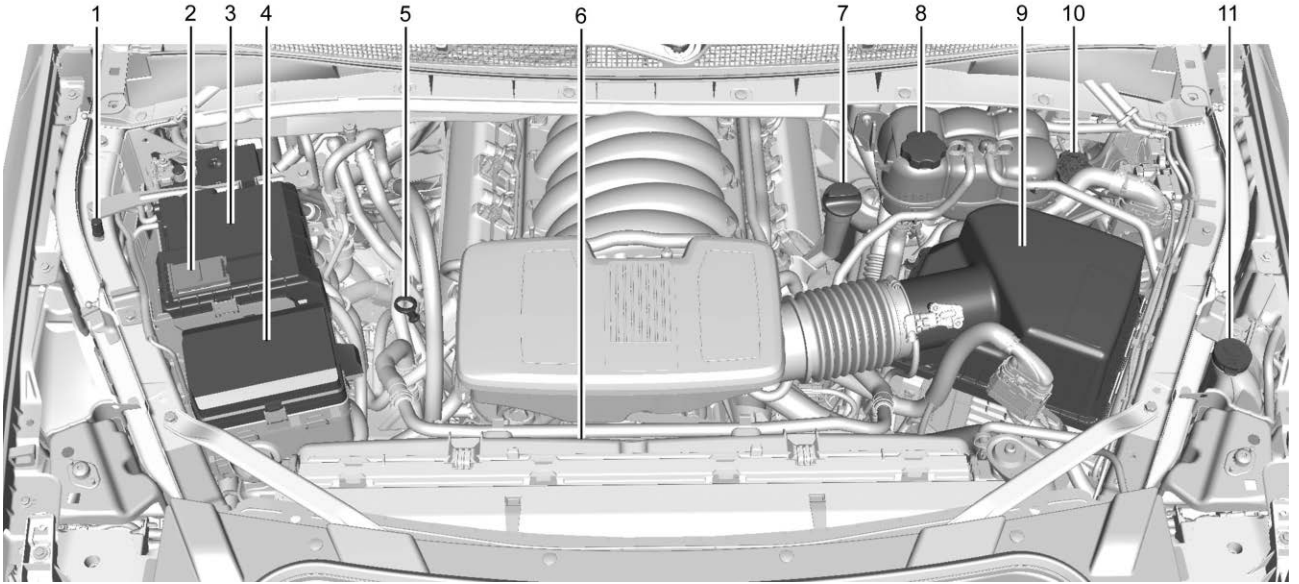

6.2L V8 Engine (L87)

NOT FOR RESALE

1. Remote Negative (–) Location. See *Jump Starting - North America* ⇨ *377*.
2. Positive (+) Terminal (Under Cover). See *Jump Starting - North America* ⇨ *377*.
3. Battery. See *Battery - North America* ⇨ *327*.
4. Engine Compartment Fuse Block. See *Engine Compartment Fuse Block* ⇨ *334*.
5. Engine Oil Dipstick. See "Checking Engine Oil" under *Engine Oil* ⇨ *315*.
6. Engine Cooling Fans (Out of View). See *Cooling System* ⇨ *320*.
7. Engine Oil Fill Cap. See "When to Add Engine Oil" under *Engine Oil* ⇨ *315*.
8. Coolant Surge Tank and Pressure Cap. See *Cooling System* ⇨ *320*.
9. Engine Air Cleaner/Filter. See *Engine Air Cleaner/Filter* ⇨ *318*.
10. Brake Fluid Reservoir. See *Brake Fluid* ⇨ *326*.
11. Windshield Washer Fluid Reservoir. See "Adding Washer Fluid" under *Washer Fluid* ⇨ *324*.

NOT FOR RESALE

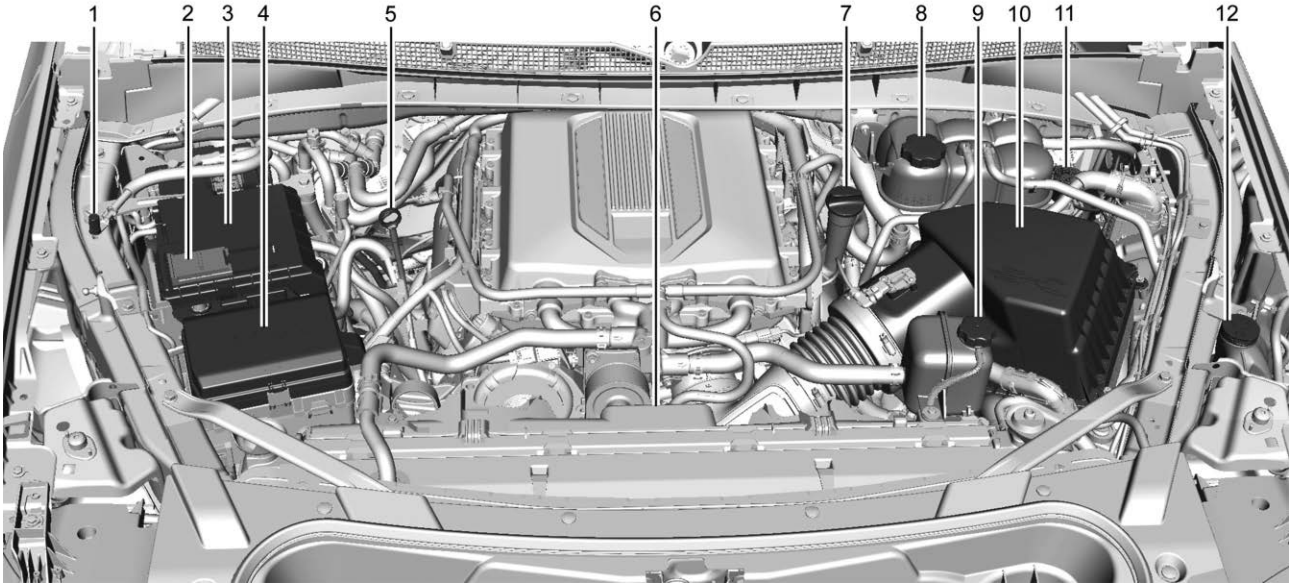

6.2L V8 Supercharged Engine (LT4)

NOT FOR RESALE

1. Remote Negative (–) Location. See *Jump Starting - North America* ⇨ *377*.
2. Positive (+) Terminal (Under Cover). See *Jump Starting - North America* ⇨ *377*.
3. Battery. See *Battery - North America* ⇨ *327*.
4. Engine Compartment Fuse Block. See *Engine Compartment Fuse Block* ⇨ *334*.
5. Engine Oil Dipstick. See "Checking Engine Oil" under *Engine Oil* ⇨ *315*.
6. Engine Cooling Fans (Out of View). See *Cooling System* ⇨ *320*.
7. Engine Oil Fill Cap. See "When to Add Engine Oil" under *Engine Oil* ⇨ *315*.
8. Engine Coolant Surge Tank and Pressure Cap. See *Cooling System* ⇨ *320*.
9. Charge Air Coolant Surge Tank and Pressure Cap. See *Cooling System* ⇨ *320*.
10. Engine Air Cleaner/Filter. See *Engine Air Cleaner/Filter* ⇨ *318*.
11. Brake Fluid Reservoir. See *Brake Fluid* ⇨ *326*.
12. Windshield Washer Fluid Reservoir. See "Adding Washer Fluid" under *Washer Fluid* ⇨ *324*.

Engine Oil

To ensure proper engine performance and long life, careful attention must be paid to engine oil. Following these simple, but important steps will help protect your investment:

- Use engine oil approved to the proper specification and of the proper viscosity grade. See "Selecting the Right Engine Oil" in this section.
- Check the engine oil level regularly and maintain the proper oil level. See "Checking Engine Oil" and "When to Add Engine Oil" in this section.
- Change the engine oil at the appropriate time. See *Engine Oil Life System* ⇨ *317*.
- Always dispose of engine oil properly. See "What to Do with Used Oil" in this section.

Checking Engine Oil

Check the engine oil level regularly, every 650 km (400 mi), especially prior to a long trip. The engine oil dipstick handle is a loop. See *Engine Compartment Overview* ⇨ *312* for the location.

⚠ Warning

The engine oil dipstick handle may be hot; it could burn you. Use a towel or glove to touch the dipstick handle.

If a low oil Driver Information Center message displays, check the oil level.

Follow these guidelines:

- To get an accurate reading, park the vehicle on level ground. Check the engine oil level after the engine has been off for at least two hours. Checking the engine oil level on steep grades or too soon after engine shutoff can result in incorrect readings. Accuracy improves when checking a cold engine prior to starting. Remove the dipstick and check the level.
- If unable to wait two hours, the engine must be off for at least 15 minutes if the engine is warm, or at least 30 minutes if the engine is not warm. Pull out the dipstick, wipe it with a clean paper towel or cloth, then push it back in all the way. Remove it again, keeping the tip down, and check the level.

NOT FOR RESALE

When to Add Engine Oil

Caution
Do not add too much oil. Oil levels above or below the acceptable operating range shown on the dipstick are harmful to the engine. If the oil level is above the operating range (i.e., the engine has so much oil that the oil level gets above the cross-hatched area that shows the proper operating range), the engine could be damaged. Drain the excess oil or limit driving of the vehicle, and seek a service professional to remove the excess oil.

If the oil is below the cross-hatched area at the tip of the dipstick and the engine has been off for at least 15 minutes, add 1 L (1 qt) of the recommended oil and then recheck the level. See "Selecting the Right Engine Oil" later in this section for an explanation of what kind of oil to use. For engine oil crankcase capacity, see *Capacities and Specifications* ➪ *403*.

See *Engine Compartment Overview* ➪ *312* for the location of the engine oil fill cap.

Add enough oil to put the level somewhere in the proper operating range. Push the dipstick all the way back in when through.

Selecting the Right Engine Oil (6.2L L87 Engine)

Caution
Failure to use the recommended engine oil or equivalent can result in engine damage not covered by the vehicle warranty.

Selecting the right engine oil depends on both the proper oil specification and viscosity grade.

Specification

Use full synthetic engine oils that meet the dexos1 specification. Engine oils that have been approved by GM as meeting the dexos1 specification are marked with the dexos1 approved logo.

Viscosity Grade

Use SAE 0W-20 viscosity grade engine oil for the 6.2L L87 Engine.

When selecting an oil of the appropriate viscosity grade, it is recommended to select an oil of the correct specification. See "Specification" earlier in this section.

Selecting the Right Engine Oil (6.2L LT4 Supercharged Engine)

Caution
Failure to use the recommended engine oil or equivalent can result in engine damage not covered by the vehicle warranty.

Selecting the right engine oil depends on both the proper oil specification and viscosity grade.

NOT FOR RESALE

Specification

Use full synthetic engine oils that meet the dexosR specification. Engine oils that have been approved by GM as meeting the dexosR specification are marked with the dexosR approved logo.

Viscosity Grade

GM recommends Mobil 1 engine oils that show the dexosR approved logo.

Use Mobil1 ESP Formula dexosR SAE 0W-40 viscosity grade engine oil for the 6.2L LT4 Supercharged Engine.

When selecting an oil of the appropriate viscosity grade, it is recommended to select an oil of the correct specification. See "Specification" earlier in this section.

Engine Oil Additives/Engine Oil Flushes

Do not add anything to the oil. The recommended oils meeting the dexos specification are all that is needed for good performance and engine protection.

Engine oil system flushes are not recommended and could cause engine damage not covered by the vehicle warranty.

What to Do with Used Oil

Used engine oil contains certain elements that can be unhealthy for your skin and could even cause cancer. Do not let used oil stay on your skin for very long. Clean your skin and nails with soap and water, or a good hand cleaner. Wash or properly dispose of clothing or rags containing used engine oil. See the manufacturer's warnings about the use and disposal of oil products.

Used oil can be a threat to the environment. If you change your own oil, be sure to drain all the oil from the filter before disposal. Never dispose of oil by putting it in the trash or pouring it on the ground, into sewers, or into streams or bodies of water. Recycle it by taking it to a place that collects used oil.

Engine Oil Life System

When to Change Engine Oil

The engine oil and filter must be changed, and the system must be reset at least once a year.

CHANGE ENGINE OIL SOON displays when the engine oil and filter needs service. Factors including run time, engine temperature, and distance driven affect how soon this light appears. Therefore, the time and distance in between oil change services may vary.

Once the CHANGE ENGINE OIL SOON light displays, change your oil as soon as possible within the next 1 000 km (600 mi). Check the oil regularly between services and keep it at the proper level. Your dealer has trained service technicians who can perform this work.

Resetting the Engine Oil Life System

You must reset the engine oil life system to 100% after every oil change. See *Vehicle Status* ⇨ *135*.

If CHANGE ENGINE OIL SOON displays when the vehicle is started and/or the OIL LIFE REMAINING is near 0%, the engine oil life system was not properly reset. Repeat the procedure.

NOT FOR RESALE

If the system is reset accidentally, the oil must be changed at 5 000 km (3,000 mi) since the last oil change.

Automatic Transmission Fluid

When to Check and Change Automatic Transmission Fluid

It is usually not necessary to check the transmission fluid level. The only reason for fluid loss is a transmission leak or overheated transmission. This vehicle is not equipped with a transmission fluid level dipstick. There is a special procedure for checking and changing the transmission fluid in these vehicles. Because this procedure is difficult, this should be done at the dealer. Contact the dealer for additional information.

Caution
Use of the incorrect automatic transmission fluid may damage the vehicle, and the damage may not be covered by the vehicle warranty. Always use the automatic transmission fluid listed in *Recommended Fluids and Lubricants* ➪ *400*.

Change the fluid and filter at the scheduled maintenance intervals listed in *Maintenance Schedule* ➪ *395*. Be sure to use the transmission fluid listed in *Recommended Fluids and Lubricants* ➪ *400*.

Engine Air Filter Life System

If equipped, this feature provides the engine air filter's remaining life and best timing for a change. The timing to change an engine air filter depends on driving and environmental conditions.

Vehicles equipped with the Performance Air Intake System do not use the air filter cleanliness monitor system. See the *Maintenance Schedule* ➪ *395*.

When to Change the Engine Air Filter

When the Driver Information Center displays a message to replace the engine air filter soon, replace the engine air filter at the earliest convenience.

The system must be reset after the engine air filter is changed.

If the Driver Information Center displays a message to check the engine air filter system, see your dealer.

How to Reset the Engine Air Filter Life System

To reset:

1. Place the vehicle in P (Park).
2. On the infotainment home screen, select Vehicle Status > Maintenance > Engine Air Filter Life.

   See *Vehicle Status* ➪ *135* for instructions on navigating and selecting items.
3. Touch Reset.
4. Touch Yes to confirm.

Engine Air Cleaner/Filter

The engine air cleaner filter is on the driver side of the engine compartment. See *Engine Compartment Overview* ➪ *312*.

When to Inspect the Engine Air Cleaner Filter

If the vehicle is not equipped with the engine air filter life system, see *Maintenance Schedule* ➪ *395* for intervals on inspecting and replacing the engine air cleaner filter.

NOT FOR RESALE

How to Inspect/Replace the Engine Air Cleaner Filter

⚠ Warning

Operating the engine with the air cleaner/filter off can cause you or others to be burned. Use caution when working on the engine. Do not start the engine or drive the vehicle with the air cleaner/filter off, as flames may be present if the engine backfires.

Caution

If the air cleaner/filter is off, dirt can easily get into the engine, which could damage it. Always have the air cleaner/filter in place when driving.

Do not start the engine or have the engine running with the engine air cleaner housing open. Before removing the engine air cleaner filter, make sure that the engine air cleaner housing and nearby components are free of dirt and debris. Do not clean the engine air cleaner filter or components with water or compressed air.

⚠ Warning

If part replacement is necessary, the part must be replaced with one of the same part number or with an equivalent part. Use of a replacement part without the same fit, form, and function may result in personal injury or damage to the vehicle.

To inspect or replace the engine air cleaner filter:

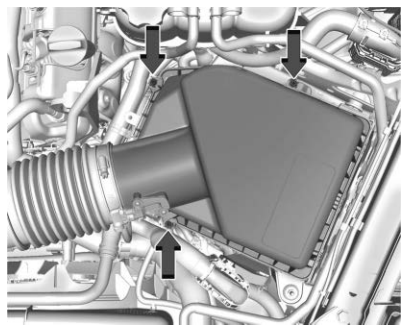

6.2L V8 Engine (L87)

1. Remove the three screws, tilt the cover, and slide it out of the assembly.
2. Inspect or replace the engine air cleaner filter.
3. Lower the cover, slide it into the assembly, then secure with the three screws.
4. If equipped, reset the engine air filter life system after replacing the engine air filter. See *Engine Air Filter Life System* ➪ *318*.

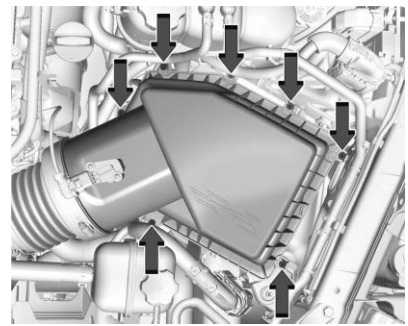

6.2L V8 Supercharged Engine (LT4)

1. Remove the seven screws, tilt the cover, and slide it out of the assembly.
2. Inspect or replace the engine air cleaner filter.

NOT FOR RESALE

3. Lower the cover, slide it into the assembly, then secure with the seven screws.
4. If equipped, reset the engine air filter life system after replacing the engine air filter. See *Engine Air Filter Life System* ⇨ *318*.

Cooling System

⚠ Warning

An underhood electric fan can start up even when the engine is not running and can cause injury. Keep hands, clothing, and tools away from any underhood electric fan.

⚠ Warning

Do not touch heater, radiator, a/c pipes or hoses, or other engine parts. They can be very hot and can burn you. Do not run the engine if there is a leak; all coolant could leak out. That could cause an engine fire and can burn you. Fix any leak before driving the vehicle.

The cooling system allows the engine to maintain the correct working temperature.

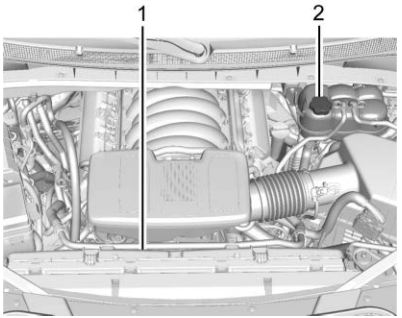

L87 Shown (LT4 Similar)

1. Engine Electric Cooling Fans (Out of View)
2. Coolant Surge Tank and Pressure Cap

Engine Coolant

The cooling system in the vehicle is filled with DEX-COOL engine coolant. This coolant is designed to remain in the vehicle for 5 years or 240 000 km (150,000 mi), whichever occurs first.

The following explains the cooling system and how to check and add coolant when it is low. If there is a problem with engine overheating, see *Engine Overheating* ⇨ *322*.

What to Use

⚠ Warning

Plain water, or other liquids such as alcohol, can boil before the proper coolant mixture will. With plain water or the wrong mixture, the engine could get too hot but there would not be an overheat warning. The engine could catch fire and you or others could be burned.

Caution

Do not use anything other than a mix of DEX-COOL coolant that meets GM Standard GMW3420 and clean, drinkable water. Anything else can cause damage to the engine cooling system and the vehicle, which would not be covered by the vehicle warranty.

NOT FOR RESALE

Use a 50/50 mixture of clean, drinkable water and DEX-COOL coolant. This mixture:

- Gives freezing protection down to −37 °C (−34 °F), outside temperature.
- Gives boiling protection up to 129 °C (265 °F), engine temperature.
- Protects against rust and corrosion.
- Will not damage aluminum parts.
- Helps keep the proper engine temperature.

Never dispose of engine coolant by putting it in the trash, or by pouring it on the ground, or into sewers, streams, or bodies of water. Have the coolant changed by an authorized service center, familiar with legal requirements regarding used coolant disposal. This will help protect the environment and your health.

Checking Coolant

The coolant surge tank is in the engine compartment on the driver side of the vehicle. See *Engine Compartment Overview* ⇨ *312* .

The vehicle must be on a level surface when checking the coolant level.

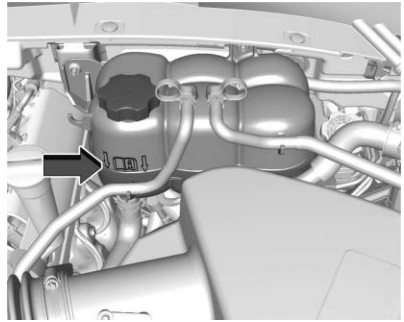

Check to see if coolant is visible in the coolant surge tank. If the coolant inside the coolant surge tank is boiling, wait until it cools down. The coolant level should be at or above the indicated mark. If it is not, there may be a leak in the cooling system.

If coolant is visible but the coolant level is not at or above the indicated mark, see the following sections on how to add coolant to the coolant surge tank following.

How to Add Coolant to the Coolant Surge Tank

⚠ Warning

Spilling coolant on hot engine parts can burn you. Coolant contains ethylene glycol and it will burn if the engine parts are hot enough.

⚠ Warning

Plain water, or other liquids such as alcohol, can boil before the proper coolant mixture will. With plain water or the wrong mixture, the engine could get too hot but there would not be an overheat warning. The engine could catch fire and you or others could be burned.

⚠ Warning

Steam and scalding liquids from a hot cooling system are under pressure. Turning the pressure cap, even a little, can cause

(Continued)

NOT FOR RESALE

Warning (Continued)

them to come out at high speed and you could be burned. Never turn the cap when the cooling system, including the pressure cap, is hot. Wait for the cooling system and pressure cap to cool.

Caution

Failure to follow the specific coolant fill procedure could cause the engine to overheat and could cause system damage. If coolant is not visible in the surge tank, contact your dealer.

If no coolant is visible in the surge tank, add coolant.

1. Remove the coolant surge tank pressure cap when the cooling system, including the coolant surge tank pressure cap and upper radiator hose, is no longer hot.

   Turn the pressure cap slowly counterclockwise about one full turn. If you hear a hiss, wait for that to stop. A hiss means there is still some pressure left.
2. Keep turning the pressure cap slowly, and remove it.
3. Fill the coolant surge tank with the proper mixture to the full cold mark.
4. With the coolant surge tank pressure cap off, start the engine and let it run until the engine coolant temperature gauge indicates approximately 90 °C (195 °F).

   By this time, the coolant level inside the coolant surge tank may be lower. If the level is lower, add more of the proper mixture to the coolant surge tank until the level reaches the indicated mark.

Caution

If the pressure cap is not tightly installed, coolant loss and engine damage may occur. Be sure the cap is properly and tightly secured.

5. Replace the pressure cap tightly.
6. Verify coolant level after the engine is shut off and the coolant is cold. If necessary, repeat coolant fill procedure Steps 1–6.

Engine Overheating

Caution

Do not run the engine if there is a leak in the engine cooling system. This can cause a loss of all coolant and can damage the system and vehicle. Have any leaks fixed right away.

The vehicle has several indicators to warn of engine overheating.

NOT FOR RESALE

There is a coolant temperature gauge and an engine coolant temperature warning light in the vehicle's instrument cluster. See “Coolant Temperature” in *Vehicle Status* ⇨ *135*.

Engine Coolant Temperature Warning Light

In addition, there are ENGINE OVERHEATED STOP ENGINE, ENGINE OVERHEATED IDLE ENGINE, and ENGINE POWER IS REDUCED messages in the Driver Information Center.

If you decide not to lift the hood when this warning appears, get service help right away. See *Roadside Assistance Program* ⇨ *411*.

If you decide to lift the hood, make sure the vehicle is parked on a level surface.

Remove any objects blocking the airflow to the radiator or sticking to the front of the vehicle.

If Steam is Coming from the Engine Compartment

⚠ Warning

Steam and scalding liquids from a hot cooling system are under pressure. Turning the pressure cap, even a little, can cause them to come out at high speed and you could be burned. Never turn the cap when the cooling system, including the pressure cap, is hot. Wait for the cooling system and pressure cap to cool.

If No Steam is Coming from the Engine Compartment

The ENGINE OVERHEATED STOP ENGINE or the ENGINE OVERHEATED IDLE ENGINE message, along with a low coolant condition, can indicate a serious problem.

If there is an engine overheat warning, but no steam is seen or heard, the problem may not be too serious. Sometimes the engine can get a little too hot when the vehicle:

- Climbs a long hill on a hot day.
- Stops after high-speed driving.
- Idles for long periods in traffic.
- Tows a trailer; see *General Towing Information* ⇨ *306*.

If an overheat warning message appears with no sign of steam, try this for a minute or so:

1. Turn the air conditioning off.
2. Turn the heater on to the highest temperature and to the highest fan speed. Open the windows as necessary.
3. When it is safe to do so, pull off the road, shift to P (Park) or N (Neutral), and let the engine idle.

If the engine coolant temperature gauge is no longer in the overheat zone or an overheat warning no longer displays, the vehicle can be driven. Continue to drive the vehicle slowly for about 10 minutes. Keep a safe vehicle distance from the vehicle in front. If the warning does not come back on, continue to drive normally and have the cooling system checked for proper fill and function.

If the warning continues, pull over, stop, and park the vehicle right away.

If there is no sign of steam, idle the engine for five minutes while parked. If the warning is still displayed, turn off the engine until it cools down.

NOT FOR RESALE

Engine Fan

If the vehicle has electric cooling fans, the fans may be heard spinning at low speed during most everyday driving. The fans may turn off if no cooling is required. Under heavy vehicle loading, trailer towing, high outside temperatures, or operation of the air conditioning system, the fans may change to high speed and an increase in fan noise may be heard. This is normal and indicates that the cooling system is functioning properly. The fans will change to low speed when additional cooling is no longer required.

The electric engine cooling fans may run after the engine has been turned off. This is normal and no service is required.

Washer Fluid

What to Use

Caution

- Do not use washer fluid that contains any type of water repellent coating. This can cause the wiper blades to chatter or skip.
- Do not use engine coolant (antifreeze) in the windshield washer. It can damage the windshield washer system and paint.
- Do not mix water with ready-to-use washer fluid. Water can cause the solution to freeze and damage the washer fluid tank and other parts of the washer system.
- When using concentrated washer fluid, follow the manufacturer instructions for adding water.
- Fill the washer fluid tank only three-quarters full when it is very cold. This allows for fluid expansion if freezing occurs, which could damage the tank if it is completely full.

Always read the manufacturer's instructions before adding windshield washer fluid. If you are in an area where the temperature may fall below freezing, use a fluid that has sufficient protection against freezing.

Adding Washer Fluid

If equipped with a washer fluid level indicator, a message displays on the Driver Information Center when the washer fluid level is low. See *Driver Information Center (DIC)* ⇨ *132*.

Open the cap with the washer symbol on it. Add washer fluid until the tank is full. See *Engine Compartment Overview* ⇨ *312* for reservoir location.

NOT FOR RESALE

Brakes

Inspections

Visually inspect brake system components as follows:

- Brake lines and hoses for proper attachment, connections, binding, leaks, cracks, and chafing.
- Disc brake pads for wear and rotors for surface condition.
- Drum brake linings/shoes for wear or cracks.
- All other brake parts for cracks and leaks.

When tires are rotated, inspect drum brake linings or disc brake pads for wear.

Troubleshooting

Brake Pedal Travel

See your dealer if the brake pedal does not return to normal height, or if there is a rapid increase in pedal travel. This could be a sign that brake service may be required.

Brake Pulsation

If brakes are pulsating:

- Inspect rotors, pads, linings for uneven wear. Resurface or replace as needed.
- Check torque on all wheel nuts. Properly torqued wheel nuts are necessary to help prevent brake pulsation. Evenly tighten wheel nuts in the proper sequence to torque specifications. See *Capacities and Specifications* ➪ *403*.

Brake Squeal and Brake Wear Indicators

⚠ Warning

The brake wear warning sound means that soon the brakes will not work well. That could lead to a crash. When the brake wear warning sound is heard, have the vehicle serviced.

Disc brake linings have built-in wear indicators that make a high-pitched warning sound when the brake linings are worn, and new linings are needed. The sound can come and go or can be heard all the time when the vehicle is moving, except when applying the brake pedal firmly.

Some driving conditions or climates can cause a brake squeal when the brakes are first applied, clearing up following several applications. This does not mean something is wrong with the brakes.

Replacing Brake System Parts

Caution

Continuing to drive with worn-out brake linings could result in costly brake repairs.

Brake pads should be replaced as complete axle sets.

Always replace brake system parts with new, approved replacement parts. If this is not done, the brakes may not work properly. The braking performance can change in many ways if the wrong brake parts are installed or if parts are improperly installed.

NOT FOR RESALE

Brake Pad Life System

When to Change Brake Pads

This vehicle has a system that estimates the remaining life of the front and rear brake pads. Brake pad life remaining is displayed as a percentage for each axle. The system must be reset every time the brake pads are changed.

When the system has determined that the brake pads need to be replaced, a message will display, which may include mileage remaining.

Brake pads should always be replaced as complete axle sets.

How to Reset the Brake Pad Life System

The system will automatically detect when significantly worn brake pads are replaced. When the ignition is turned on after new pads and wear sensors are installed, a message will display. Follow the prompts to reset the system.

The brake pad life system can also be manually reset:

1. Place the vehicle in P (Park).
2. From the infotainment home screen, select Vehicle Status > Maintenance > Brake Pad Life. See *Vehicle Status* ⇨ *135*.
3. Touch either RESET FRONT BRAKE PADS or RESET REAR BRAKE PADS. These will appear once the brake pads are replaced.
4. Touch RESET again to confirm. The percentage of brake pad life remaining will change to 100%.
5. Repeat for the other set of brake pads if they were also replaced.

See your dealer if the brake pads have been replaced and the reset option on the information display does not appear.

How to Disable the Brake Pad Life System

The brake pad life system can be turned off. This may be necessary if aftermarket brake pads without wear sensors are installed. When the system is turned off, the front and rear brake pad life percentages will not display. However, the built-in wear indicators that make a high-pitched warning sound when the brake pads are worn can still determine when the pads should be replaced. See *Brakes* ⇨ *325*.

To turn off the brake pad life system:

1. Place the vehicle in P (Park).
2. From the infotainment home screen, select Vehicle Status > Maintenance > Brake Pad Life. See *Vehicle Status* ⇨ *135*.
3. Touch Turn Off.

To turn the brake pad life system back on, follow the same steps and touch Turn On in the last step.

Brake Fluid

The brake master cylinder reservoir is filled with GM approved DOT 4 brake fluid as indicated on the reservoir cap. See *Engine Compartment Overview* ⇨ *312* for the location of the reservoir.

When the brake fluid falls to a low level, the brake warning light comes on. See *Brake System Warning Light* ⇨ *123*.

NOT FOR RESALE

Checking Brake Fluid

⚠ Warning

If too much brake fluid is added, it can spill on the engine and burn, if the engine is hot enough. You or others could be burned, and the vehicle could be damaged. Add brake fluid only when work is done on the brake hydraulic system.

Always clean the brake fluid reservoir cap and the area around the cap before removing it.

To check the brake fluid, place the vehicle in P (Park) on a level surface. The brake fluid level should be between the Min and Max marks on the brake fluid reservoir.

There are only two reasons why brake fluid may be low:

- Normal brake lining wear. When new linings are installed, the fluid level will return to normal.
- Brake system fluid leak. With a leak, the brakes will not work well. To have the brake hydraulic system fixed, see your dealer.

Do not top off the brake fluid. Adding fluid does not correct a leak. If fluid is added when the linings are worn, there will be too much fluid when new brake linings are installed. Add or remove fluid, as necessary, only when work is done on the brake hydraulic system.

Brake fluid absorbs water over time which degrades the effectiveness of the brake fluid. Replace brake fluid at the specified intervals to prevent increased stopping distance.

What to Add

⚠ Warning

The wrong or contaminated brake fluid could result in damage to the brake system. This could result in the loss of braking leading to a possible injury. Always use the proper GM approved brake fluid.

Caution

If brake fluid is spilled on the vehicle's painted surfaces, the paint finish can be damaged. Immediately wash off any painted surface.

Use only GM approved DOT 4 brake fluid from a clean, sealed container. See *Recommended Fluids and Lubricants* ➪ *400*.

Battery - North America

The original equipment battery is maintenance free. Do not remove the cap and do not add fluid.

The vehicle has an Absorbed Glass Mat (AGM)12-volt battery. Refer to the replacement number shown on the original battery label when a new battery is needed. See *Engine Compartment Overview* ➪ *312* for battery location.

Installation of a standard 12-volt battery will result in reduced 12-volt battery life.

When using a 12-volt battery charger on the 12-volt Absorbed Glass Mat (AGM) battery, some chargers have an Absorbed Glass Mat (AGM) battery setting on the charger. If available, use the Absorbed Glass Mat (AGM) setting on the charger, to limit charge voltage to 14.8 volts. Follow the charger manufacturer's instructions.

NOT FOR RESALE

Stop/Start System

This vehicle has a Stop/Start system to shut off the engine to help conserve fuel. See *Stop/Start System* ⇨ *206*.

⚠ Warning

WARNING: Battery posts, terminals and related accessories can expose you to chemicals including lead and lead compounds, which are known to the State of California to cause cancer and birth defects or other reproductive harm. Wash hands after handling. For more information go to www.P65Warnings.ca.gov.

See *California Proposition 65 Warning* ⇨ *1*.

Vehicle Storage

⚠ Warning

Batteries have acid that can burn you and gas that can explode. You can be badly hurt if you are not careful. Always wear eye protection. See *Jump Starting - North America* ⇨ *377* for tips on working around a battery without getting hurt.

Infrequent Usage: Remove the black, negative (–) cable from the battery to keep the battery from running down.

Extended Storage: Remove the black, negative (–) cable from the battery or use a battery trickle charger.

Four-Wheel Drive

Transfer Case

If the vehicle is equipped with Four-Wheel Drive, be sure to perform the lubricant checks described in this section.

When to Check Lubricant

Refer to *Maintenance Schedule* ⇨ *395* to determine how often to check the lubricant.

How to Check Lubricant

To get an accurate reading, the vehicle should be on a level surface.

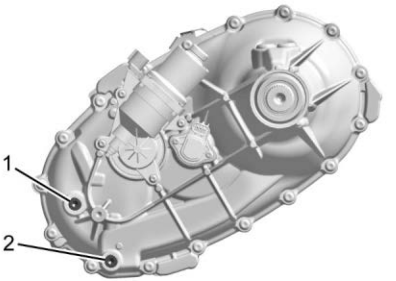

1. Fill Plug
2. Drain Plug

If the level is below the bottom of the fill plug (1) hole, located on the transfer case, some lubricant will need to be added. Add enough lubricant to raise the level to the bottom of the fill plug (1) hole. Use care not to overtighten the plug.

What to Use

Refer to *Recommended Fluids and Lubricants* ⇨ *400* to determine what kind of lubricant to use.

NOT FOR RESALE

Front Axle

When to Check Lubricant

It is not necessary to regularly check the front axle fluid unless a leak is suspected or an unusual noise is heard. A fluid loss could indicate a problem. Have it inspected and repaired. This service can be complex. See your dealer.

Do not directly power wash the transfer case and/or front/rear axle output seals. High pressure water can overcome the seals and contaminate the fluid. Contaminated fluid will decrease the life of the transfer case and/or drive axles and should be replaced.

Rear Axle

When to Check Lubricant

It is not necessary to regularly check the rear axle fluid unless a leak is suspected or an unusual noise is heard. A fluid loss could indicate a problem. Have it inspected and repaired. This service can be complex. See your dealer.

Do not directly power wash the transfer case and/or front/rear axle output seals. High pressure water can overcome the seals and contaminate the fluid. Contaminated fluid will decrease the life of the transfer case and/or drive axles and should be replaced.

Park Brake and P (Park) Mechanism Check

⚠ Warning

When you are doing this check, the vehicle could begin to move. You or others could be injured and property could be damaged. Make sure there is room in front of the vehicle in case it begins to roll. Be ready to apply the regular brake at once should the vehicle begin to move.

To check the parking brake and P (Park) mechanism:

1. Park on a steep hill with the vehicle facing downhill.
2. Keep your foot on the regular brake and set the parking brake.
3. Check the holding ability as follows:
   - **Parking brake:** Turn the vehicle on and shift to N (Neutral). Slowly remove your foot from the brake pedal until only the parking brake is holding the vehicle.
   - **P (Park) mechanism:** Turn the vehicle on and shift to P (Park). Then release the parking brake and slowly remove your foot from the regular brake pedal.

If there is excessive vehicle roll during these checks, contact your dealer for service.

Wiper Blade Replacement

Caution

Allowing the wiper arm to touch the windshield when no wiper blade is installed could damage the windshield. Any damage that occurs would not be covered by the vehicle warranty. Do not allow the wiper arm to touch the windshield.

Windshield wiper blades should be replaced periodically. See *Maintenance Schedule* ➪ *395*.

NOT FOR RESALE

Replacement blades come in different types and are removed in different ways. For proper type and length, see your dealer.

Front Wiper Blade Replacement

To replace the wiper blade:

1. Pull the wiper assembly away from the windshield.

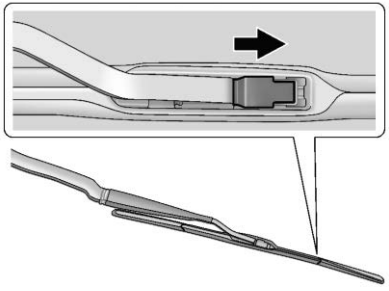

2. Lift up on the latch in the middle of the wiper blade where the wiper arm attaches.
3. With the latch open, pull the wiper blade down toward the windshield far enough to release it from the J-hooked end of the wiper arm.
4. Remove the wiper blade.
5. Reverse Steps 1–3 for wiper blade replacement.

Rear Wiper Blade Replacement

To replace the rear wiper blade:

1. With the rear wiper in the OFF position, open the liftglass to access the rear wiper arm/blade.

   The rear wiper blade will not lock in a vertical position so use care when pulling it away from the vehicle.

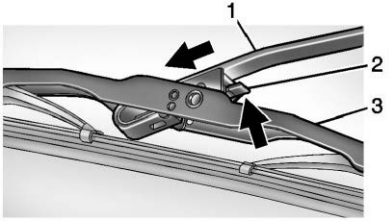

2. Push the release lever (2) to disengage the hook and push the wiper arm (1) out of the blade assembly (3).
3. Push the new blade assembly securely in the wiper arm hook until the release lever clicks into place.
4. Return the wiper arm and blade assembly to the rest position on the glass.

Glass Replacement

If the windshield or front side glass must be replaced, see your dealer to determine the correct replacement glass.

Windshield Replacement

A replacement windshield must be GM approved and installed according to GM specifications to maintain its features and functionality (for example, Advanced Driver Assistance Systems).

If your vehicle is equipped with any of the following features, see your dealer:

- Advanced Driver Assistance Systems. See *Advanced Driver Assistance Systems* ⇨ *271*.
- Head-Up Display. See *Head-Up Display (HUD)* ⇨ *137*.

NOT FOR RESALE

Gas Strut(s)

⚠ Warning

If the gas struts that hold open the hood, trunk, and/or liftgate fail, you or others could be seriously injured. Take the vehicle to your dealer for service immediately. Visually inspect the gas struts for signs of wear, cracks, or other damage periodically. Check to make sure the hood/trunk/liftgate is held open with enough force. If struts are failing to hold the hood/trunk/liftgate, do not operate. Have the vehicle serviced.

Caution

Do not apply tape or hang any objects from gas struts. Also do not push down or pull on gas struts. This may cause damage to the vehicle.

Your vehicle may be equipped with gas strut(s) to provide assistance in lifting and holding open the hood/trunk/liftgate system in full open position.

See your dealer to have the gas strut(s) serviced. See *Maintenance Schedule* ➪ *395*.

Hood

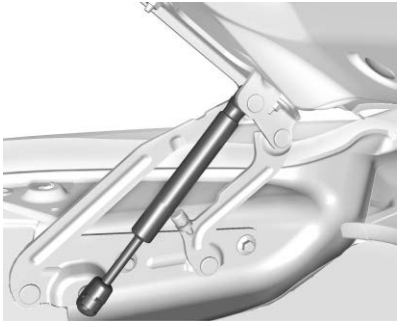

Trunk

Liftgate

NOT FOR RESALE

Headlight Aiming

Front Headlight Aiming

Headlight aim has been preset and should need no further adjustment.

If the vehicle is damaged in a crash, the headlight aim may be affected. If adjustment to the headlights is necessary, see your dealer.

Bulb Replacement

LED Lighting

This vehicle is equipped with LED light sources for all exterior lights.

The light assemblies do not contain any serviceable light sources (e.g., incandescent bulbs).

For replacement of any LED lighting assembly, contact your dealer.

Electrical System

Electrical System Overload

The vehicle has fuses and circuit breakers to protect the wires powering the devices in your vehicle against an electrical system overload.

Circuit breakers open and close to protect the circuit when the electrical load is too heavy. The internal filament may permanently open under a heavy load. If this happens, replace the fuse to restore the protected electrical function and reduce the risk of circuit overload and electrical fire.

Fuses and circuit breakers protect the wires powering the devices in your vehicle.

To check a fuse, look at the band inside the fuse. If the band is broken or melted, replace the fuse. Be sure to replace a bad fuse with a fuse of the identical size and rating.

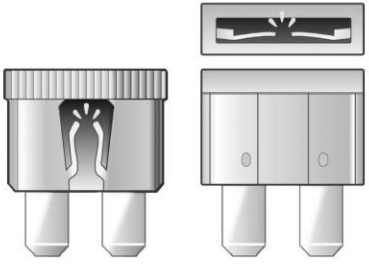

Replacing a Blown Fuse

If you need to replace a fuse, choose a fuse of the same amperage from the fuse block. Use either a SPARE fuse or a non-essential feature if there are no SPARE fuses of the correct amperage. Replace the blown fuse as soon as possible.

To replace a blown fuse:

1. Turn off the vehicle.
2. Locate the fuse puller in the instrument panel fuse block.

NOT FOR RESALE

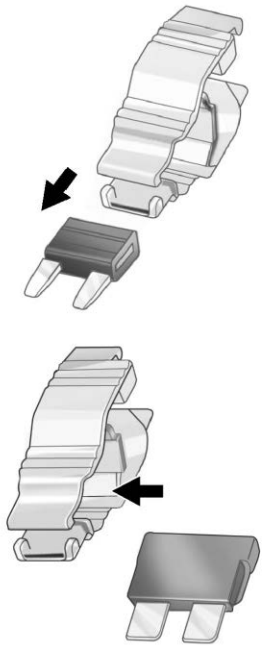

3. Use the fuse puller to remove the fuse from the top or side, as shown above.

4. If the fuse must be replaced immediately, temporarily replace the fuse with one of the same amperage from the fuse block. Choose a non-essential vehicle feature to safely operate the vehicle. Repeat Steps 2–3.

5. Insert the replacement fuse into the empty slot of the blown fuse.

See your dealer to replace the blown fuse.

Headlight Wiring

An electrical overload may cause the lights to go on and off, or in some cases to remain off. See your dealer if the lights go on and off or remain off.

Windshield Wipers

Overload due to heavy snow or ice may cause damage to the wiper linkage. Always clear heavy snow and ice from the windshield before using the windshield wipers.

If the wiper motor overheats due to heavy snow or ice, the windshield wipers will stop until the motor cools. Once the motor has cooled down, the wipers will restart.

Address any electrical overload as soon as possible. See your dealer.

Fuses and Circuit Breakers

⚠ Danger

Fuses and circuit breakers are marked with their ampere rating. Do not exceed the specified amperage rating when replacing fuses and circuit breakers. Use of an oversized fuse or circuit breaker can result in a vehicle fire. You and others could be seriously injured or killed.

⚠ Warning

Installation or use of fuses that do not meet GM's original fuse specifications is dangerous. The fuses could fail, and result in a fire. You or others could be injured or killed, and the vehicle could be damaged.

The fuses and circuit breakers protect the electrical system from short circuits, greatly reducing the chance of electrical damage or fire.

NOT FOR RESALE

See *Accessories and Modifications* ➪ *309* and *General Information* ➪ *309*.

To check or replace a blown fuse, see *Electrical System Overload* ➪ *332*.

Engine Compartment Fuse Block

The engine compartment fuse block is in the engine compartment, on the driver side of the vehicle. See *Engine Compartment Overview* ➪ *312*.

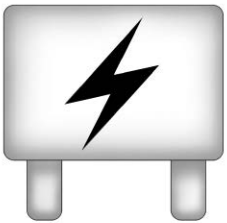

Lift the cover to access the fuse block.

Caution
Spilling liquid on any electrical component on the vehicle may damage it. Always keep the covers on any electrical component.

NOT FOR RESALE

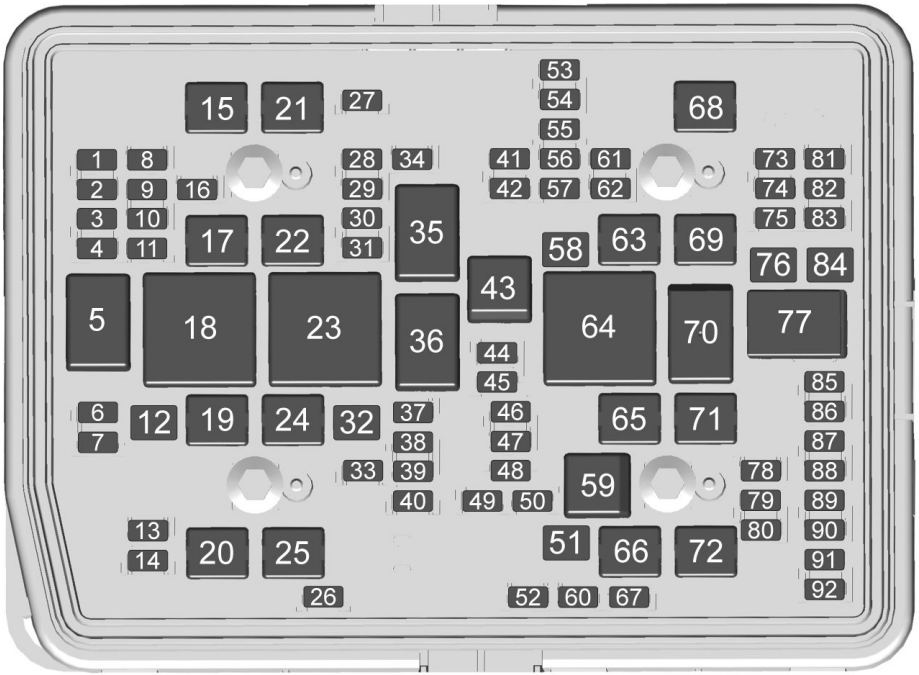

NOT FOR RESALE

The vehicle may not be equipped with all the fuses, relays, and features shown. For the most accurate fuse amperage ratings and functions, refer to the fuse label.

Fuses	Usage
F01	–
F02	SAM RF (BATT 2) – Side Access Module Right Front (Battery 2)
F03	SAM RR (BATT 1) – Side Access Module Right Rear (Battery 2)
F04	–
F06	ELM 7 – Exterior Lighting Module 7
F07	ELM 4 – Exterior Lighting Module 4
F08	–
F09	ELM 5 – Exterior Lighting Module 5
F10	ACP 3 – Advanced Driver Assistance Systems Compute Platform 3
F11	LRR FRT SRR/VKS FRT – Long Range Radar Sensor/Short Range Radar Sensor//Virtual Key Sensor 1 & 3
F12	SAM RF (BATT 1) – Side Access Module Right Front (Battery 1)
F13	WSW FRT – Washer Front
F14	WSW RR – Washer Rear
F15	REC BATT 2 – Rear Electrical Center Battery 2
F16	PSM – Power Sounder Module
F17	EBCM BATT 1 – Electronic Brake Control Module Battery 1
F19	DC/AC INV – Direct Current Alternating Current Inverter
F20	IECR 2 – Interior Electrical Center Right 2
F21	ACP 4 – Advanced Driver Assistance Systems Compute Platform 4
F22	–
F24	Fuel HTR – Fuel Heater
F25	REC BATT 1 – Rear Electrical Center Battery 1
F26	Camera Wash
F27	Horn
F28	HDLP RT – Headlight Right
F29	HDLP LT – Headlight Left
F30	ELM 3 – Exterior Lighting Module 3

NOT FOR RESALE

Fuses	Usage
F31	ELM 1 – Exterior Lighting Module 1
F32	SAM RR (BATT 1) – Side Access Module Right Rear (Battery 1)
F33	Not R/C – RUN/CRANK Steering Column
F34	–
F37	MISC BODY IGN 1 – Electronic Brake Control Module/Differential Control Module/Reflective Light Auxiliary Display
F38	MISC BODY IGN 2 – Direct Current Alternating Current Inverter/RUN CRANK Exterior Lighting Module/ Seat Fan Control Cushion Module Row 1 & 2
F39	Upfitter
F40	MISC IP IGN – RUN/CRANK: Electronic Toll Collection/ Inside Rear View Mirror/ Upfitter Provision/Air Electric Heater Front/ Sensing Diagnostic Module
F41	TRLR PRK LAMP – Trailer Park Light
F42	T/LAMP RT – Trailer Light Right
F44	TIM/TRLR IGN – Trailer Interface Module
F45	SECD AXLE MTR – Secondary Axle Motor
F46	ECM IGN – Engine Control Module
F47	TCM/TCCC/PTSQ/DEFN IGN – Transmission Control Module/Transfer Case Control Module/Power Train Sound Quality/ Diesel Exhaust Fluid Control Module
F48	–
F49	TRANS AUX OIL PUMP – Transmission Auxiliary Oil Pump
F50	A/C CLUTCH – Electric Variable Displacement Control Compressor
F51	TCCM – Transfer Case Control Module
F52	FRT WPR – Front Wiper
F53	–
F54	T/LAMP LT – Trailer Light Left

NOT FOR RESALE

Fuses	Usage
F55	TRLR REV LAMP – Trailer Reverse Lights
F56	SADS – Semi-Active Damping System
F57	–
F58	STRTR MTR – Starter Motor
F60	PWR/TRN SNSR 2 – Powertrain Sensor 2
F61	ALC MAIN – Automatic Leveling Control
F62	DEFC BATT 2/CNSTR VENT SOL – Diesel Exhaust Fluid Control Module/Fuel Tank Zone Module/Canister Vent Solenoid
F63	TRLR BRK – Trailer Brake Control Module
F65	–
F66	COOL FAN MTR LT – Cooling Fan Motor Left

Fuses	Usage
F67	–
F68	ALC MTR — Automatic Leveling Control Motor
F69	STRTR PINION – Starter Pinion
F71	COOL FAN LWR – Cooling Fan Motor Lower
F72	COOL FAN MTR RT – Cooling Fan Motor Right
F73	TRLR STP/TRN LIGHT LT – Trailer Stop Turn Left
F74	TIM BATT 2 – Trailer Interface Module Battery 2
F75	DEFC BATT 1 – Diesel Exhaust Fluid Controller Battery 1
F76	ELEC RNG BDS – Articulating Running Board Module
F78	ECM BATT – Engine Control Module Battery

Fuses	Usage
F79	CABIN COOL PUMP 17W – Auxiliary Water Pump Motor
F80	PWR/TRN SNSR 1 – Powertrain Sensor 1
F81	TRLR STP/TRN LIGHT RT – Trailer Stop Turn Right
F82	TIM BATT 1 – Trailer Interface Module Battery 1
F83	FTZM – Fuel Tank Zone Module
F84	TRLR BATT – Trailer Battery
F85	AUX WATER PUMP – Charge Air Cooler Water Pump Motor
F86	PWR/TRN ECM 1 – Powertrain Electric Control Module 1
F87	EVEN INJ/ECM – Even Ignition Coil/Engine Control Module

NOT FOR RESALE

Fuses	Usage
F88	O2 B SNSR/MAF/ECM/WRAF/BCV – Engine Control Module: Oxygen Heated Sensor/Mass Air Flow/Inlet Absolute Pressure/Throttle Inlet Absolute Pressure/Evaporative Emission Purge Pump Motor/Block Rotary Valve Actuator/Wide Range Air Fuel
F89	O2 A SNSR/EPWR/CNSTR PRGE/WRAF – Engine Control Module: Step Cam Exhaust Solenoid/Step Cam Intake Solenoid/Solenoid Turbo Bypass/Canister Purge Solenoid/Wide Range Air Fuel/Engine Oil Control Solenoid
F90	ODD INJ/ECM – Odd Ignition Coil/Engine Control Module
F91	PWR/TRN ECM 2 – Powertrain Engine Control Module 2
F92	AERO SH – Aero Shutter

Relays	Usage
K05	–
K18	DC/AC INV – Direct Current Alternating Current Inverter
K23	FUEL HTR – Fuel Heater
K35	TRLR PRK LAMP – Trailer Park Light
K36	RUN/CRANK – Run/Crank
K43	SECD AXLE MOTOR – Secondary Axle Motor
K59	A/C CLTCH – Electric Variable Displacement Control Compressor
K64	STRTR MTR – Starter Motor
K70	STRTR PINION – Starter Pinion
K77	PWR/TRN – Powertrain

Instrument Panel Fuse Block

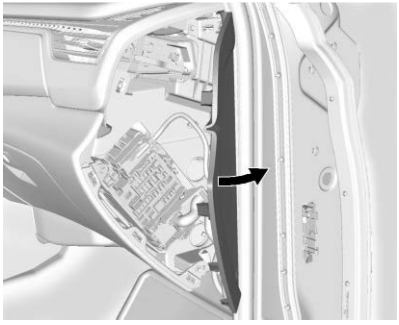

The right instrument panel fuse block access door is on the passenger side edge of the instrument panel.

Pull off the cover to access the fuse block. A fuse puller is available on the right instrument panel end cap.

NOT FOR RESALE

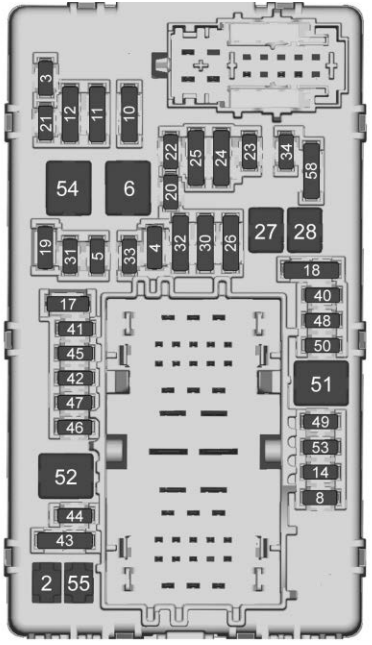

There are relays on the back of the fuse block. To access, press the tabs and remove the fuse block.

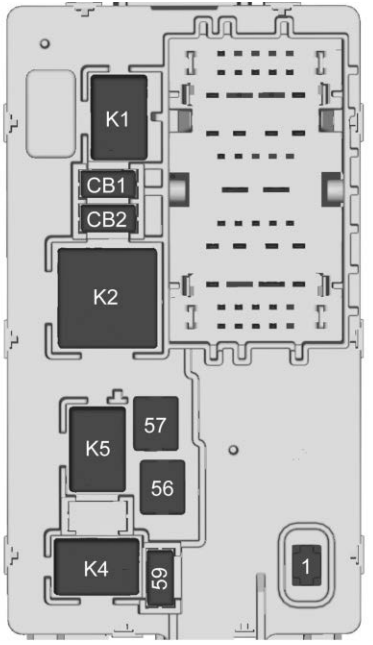

The vehicle may not be equipped with all the fuses, relays, and features shown. For the most accurate fuse amperage ratings and functions, refer to the fuse label.

Fuses	Usage
F01	RT DR – Right Doors
F02	LT DR – Left Doors
F03	UGDO/OHC/CAMERA/ETC/ACP2/LIDAR – Universal Garage Door Opener/Overhead Console/Camera/Electronic Toll Collection/Advanced Driver Assistance Systems Compute Platform/Light Detection and Ranging
F04	BCM 2 – Body Control Module 2
F05	DISPLAYS – Virtual Cockpit Display
F06	FRT BLWR – Front Blower
F08	LT DR PNL – Left Door Panel Side Access Door Module/Object Detection Sensor/Door Lock Exterior Switch/Door Panel Switch

NOT FOR RESALE

Fuses	Usage
F10	TVR/UVM/TILT – Upfitter Vehicle Module/Steering Tilt and Telescope Switch
F11	DLC/COL LOCK – Data Link Connector/Steering Column Lock
F12	CGM/ONSTAR – Central Gateway Module/ Telematics Control Platform (ONSTAR)
F14	RT DR PNL – Right Door Panel Side Access Door Module/Object Detection Sensor/Door Lock Exterior Switch/Door Panel Switch
F17	STR WHL CONTRL – Steering Wheel Control
F18	–
F19	–
F20	–
F21	–
F22	HTD WHL – Heated Steering Wheel
F23	–
F24	GLVBX DR REL – Glove Box Door Release
F25	SEO/Upfitter – Upfitter Provision – Police Spot Light Left/Police Spot Light Right
F26	USB/SEO RAP – Universal Serial Bus/Search Engine Optimization Retained Accessory Power (Front Passenger Infotainment Jack)/Auxiliary USB Power Outlet/Auxiliary Audio-Video Jack/Power Outlet Auxiliary AC
F27	APO/RAP – Auxiliary Power Outlet/Retained Accessory Power
F28	–
F30	SDM/AOS/NVM/TBCS – Sensing and Diagnostic Module/ Automatic Occupant Sensing/Night Vision Module/Trailer Brake Control Switch
F31	BCM 3 – Body Control Module 3
F32	VCU USB – Virtual Cockpit Unit
	–
F33	BCM 4 – Body Control Module 4
F34	Out of Park
F40	–
F41	–

NOT FOR RESALE

Fuses	Usage
F42	ELEC PRK/BRK SW/ERTS – Electric Park Brake Switch/ Electronic Transmission Range Select – Shifter Module
F43	RSI/MFC – Multi-Functional Control Module/Front Passenger Infotainment Jack/Auxiliary Audio-Video Jack/Auxiliary Audio-Video Module & Rear Seat Infotainment
F44	–
F45	–
F46	–
F47	–
F48	TCM – Telematics Control Module
F49	BCM 1 – Body Control Module 1
F50	–

Fuses	Usage
F51	–
F52	–
F53	–
F54	Sunroof
F55	MSM ROW 2 MTR RT – Memory Seat Module Right Row 2
F56	DC/DC CNV BATT 1 – Direct Current/Direct Current Converter Battery 1
F57	DC/DC CNV BATT 2 – Direct Current/Direct Current Converter Battery 2
F58	–
F59	–

Circuit Breakers	Usage
CBO1	–
CBO2	APO 2 – Auxiliary DC Power Outlet Row 2

Relays	Usage
K01	GLVBX DR REL – Glove Box Door Release
K02	RAP/ACCY 1 – Retain Accessory Power/ Accessory 1
K04	–
K05	–

NOT FOR RESALE

Rear Compartment Fuse Block

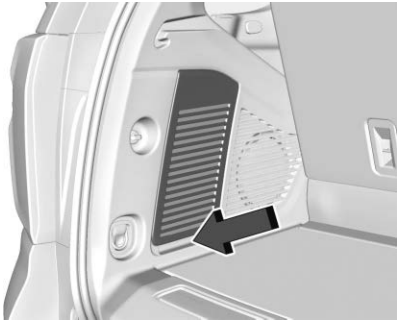

The rear compartment fuse block is behind the access panel on the left side of the compartment.

Pull the panel out by grabbing the finger access slot at the rear edge.

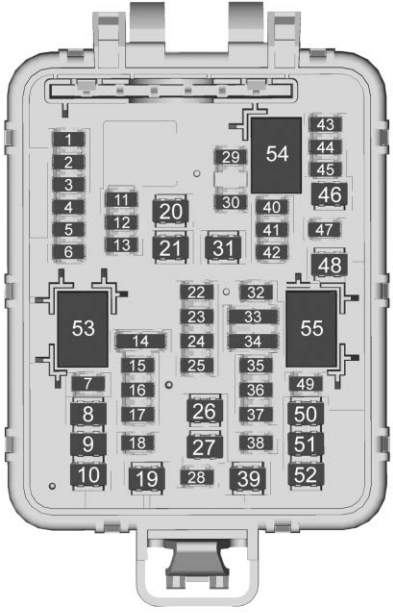

The vehicle may not be equipped with all the fuses, relays, and features shown. For the most accurate fuse amperage ratings and functions, refer to the fuse label.

Fuses	Usage
F01	RFA – Remote Function Actuator
F02	–
F03	HTD SEAT MDL ROW 1 – Heated Seat Module Row 1
F04	MSM DRVR – Memory Seat Module Driver
F05	–
F06	–
F07	Amp Aux 2 – Amplifier Auxiliary 2
F08	AMP RRSEAT – Amplifier Rear Seat
F09	SAM LR (BATT 1) – Side Access Module Left Rear (Battery 1)
F10	–
F11	PWR FOLD SEAT ROW 2 – Power Folding Seat Row 2

NOT FOR RESALE

Fuses	Usage
F12	GBS – Glass Breakage Sensor
F13	SAM LR (BATT 2) – Side Access Module Left Rear (Battery 2)
F14	MSM ROW 2 – Seat Position Switch Right Row 2/Memory Bolster Module Right Row 2/ Memory Seat Module Right Row 2 & Seat Position Switch Left Row 2/Memory Bolster Module Left Row 2/Memory Seat Module Left Row 2
F15	HTD SEAT MDL ROW 1 (BATT 2) – Heated Seat Module Row 1 (Battery 2)
F16	RH CINCH LATCH – Global Door Latch Right Front/ Global Door Latch Right Rear
F17	MSM PASS – Lumbar Module Passenger/Memory Seat Module Passenger/Memory Bolster Module Passenger (1 & 2)/Seat Position Switch Passenger
F18	REAR WIPER – Wiper Motor Rear
F19	–
F20	RR DEFOG – Rear Defog
F21	MSM ROW 2 MTR LT – Memory Seat Module Row 2 Left
F22	HVAC_RR/FCCD/FPI – Heating Ventilation and Air Conditioning Faceplate Display Rear Console/Front Command Center Display
F23	ODS – Occupant Detection Sensor
F24	–
F25	OBS DET – Short Range Radar Rear Left & Right/ Short Range Radar Side Rear Left & Right
F26	RDCM – Differential Control Module
F27	Amp Aux 1 – Amplifier Auxiliary 1
F28	WCM/VKM – Wireless Charger Module/Virtual Key Back-Up Module
F29	–
F30	–
F31	Amp – Amplifier
F32	–
F33	ICCM – Integrated Chassis Control Module
	–

NOT FOR RESALE

Fuses	Usage
F34	HTD SEAT MDL ROW 2 – Heated Seat Module Row 2
F35	TTPM/VKS RR – Trailer Tire Monitor Module/Virtual Key Sensor Rear
F36	ELM 2 – Exterior Lighting Module 2
F37	ELM 6 – Exterior Lighting Module 6
F38	RFCM/RR_SLD_CNSL – Refrigerator Freezer Compartment Module/ Power Sliding Console
F39	SAM LF (BATT 1) – Side Access Module Left Front (Battery 1)
F40	–
F41	–
F42	SAM LF (BATT 2) – Side Access Module Left Front (Battery 2)
F43	UPA – Park Assist Module

Fuses	Usage
F44	–
F45	AFL AHL – Adaptive Forward Lighting/Automatic Headlamp Leveling
F46	REAR HVAC BLWR MTR – Blower Motor Control Module Rear
F47	LH CINCH LATCH – Global Door Latch Left Front/Global Door Latch Left Rear
F48	PWR SEAT RECL MDL – Power Folding Seat Module Row 3
F49	LIFT GLASS – Lift Glass Release
F50	DRVR PWR SEAT – Seat Lumbar Switch Driver/ Seat Position Switch Driver/ Memory Seat Module Driver

Fuses	Usage
F51	PWR TAILGATE MDL – Power Tailgate Module
F52	PASS PWR SEAT – Seat Position Switch Passenger/ Memory Seat Module Passenger/Seat Lumbar Switch Passenger

Relays	Usage
K53	–
K54	–
K55	LIFT GLASS – Lift Glass Release

Wheels and Tires

Tires

Every new GM vehicle has high-quality tires made by a leading tire manufacturer. See the warranty manual for information

NOT FOR RESALE

regarding the tire warranty and where to get service. For additional information refer to the tire manufacturer.

⚠ Warning

- Poorly maintained and improperly used tires are dangerous.
- Overloading the tires can cause overheating as a result of too much flexing. There could be a blowout and a serious crash. See *Vehicle Load Limits* ➪ *200*.
- Underinflated tires pose the same danger as overloaded tires. The resulting crash could cause serious injury. Check all tires frequently to maintain the recommended pressure. Tire pressure should be checked when the tires are cold.

(Continued)

Warning (Continued)

- Overinflated tires are more likely to be cut, punctured, or broken by a sudden impact — such as when hitting a pothole. Keep tires at the recommended pressure.
- Worn or old tires can cause a crash. If the tread is badly worn, replace them.
- Replace any tires that have been damaged by impacts with potholes, curbs, etc.
- Improperly repaired tires can cause a crash. Only your dealer or an authorized tire service center should repair, replace, dismount, and mount the tires.
- Do not spin the tires in excess of 56 km/h (35 mph) on slippery surfaces such as snow, mud, ice, etc. Excessive spinning may cause the tires to explode.

See *Tire Pressure for High-Speed Operation* ➪ *352* for inflation pressure adjustment for high-speed driving.

All-Season Tires

This vehicle may come with all-season tires. These tires are designed to provide good overall performance on most road surfaces and weather conditions. Original equipment tires designed to GM's specific Tire Performance Criteria (TPC) have a TPC specification code molded onto the sidewall.

Consider installing winter tires on the vehicle if frequent driving on snow or ice-covered roads is expected. All-season tires provide adequate performance for most winter driving conditions, but they may not offer the same level of traction or performance as winter tires on snow or ice-covered roads. See *Winter Tires* ➪ *346*.

Winter Tires

This vehicle was not originally equipped with winter tires. Winter tires are designed for increased traction on snow and ice-covered roads. Consider installing winter tires on the vehicle if frequent driving on ice or snow

NOT FOR RESALE

covered roads is expected. See your dealer for details regarding winter tire availability and proper tire selection. Also, see *Buying New Tires* ⇨ *359*.

With winter tires, there may be decreased dry road traction, increased road noise, and shorter tread life. After changing to winter tires, be alert for changes in vehicle handling and braking.

If using winter tires:

- Use tires of the same brand and tread type on all four wheel positions.
- Use only radial ply tires of the same size, load range, and speed rating as the original equipment tires.

Winter tires with the same speed rating as the original equipment tires may not be available for H, V, W, Y, and ZR speed rated tires. If winter tires with a lower speed rating are chosen, never exceed the tire's maximum speed capability.

Low-Profile Tires

Caution

Low-profile tires are more susceptible to damage from road hazards or curb impact than standard profile tires. Tire and/or wheel assembly damage can occur when coming into contact with road hazards like potholes, or sharp edged objects, or when sliding into a curb. The warranty does not cover this type of damage. Keep tires set to the correct inflation pressure and when possible, avoid contact with curbs, potholes, and other road hazards.

If the vehicle has 285/40R24 size tires, they are classified as low-profile tires.

Tire Sidewall Labeling

Useful information about a tire is molded into the sidewall. The example shows a typical passenger vehicle tire sidewall.

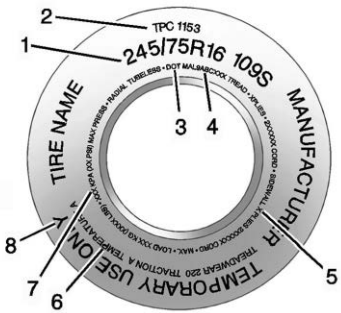

Passenger/Spare Tire

(1) Tire Size : The tire size is a combination of letters and numbers used to define a particular tire's width, height, aspect ratio, construction type, and service description. See the "Tire Size" illustration in this section.

(2) TPC Spec (Tire Performance Criteria Specification) : Original equipment tires designed to GM's specific tire performance criteria have a TPC specification code molded onto the sidewall. GM's TPC specifications meet or exceed all federal safety guidelines.

NOT FOR RESALE

(3) DOT (Department of Transportation) : The Department of Transportation (DOT) code indicates that the tire is in compliance with the U.S. Department of Transportation Motor Vehicle Safety Standards.

DOT Tire Date of Manufacture : The last four digits of the Tire Identification Number indicate the tire manufactured date. The first two digits represent the week and the last two digits, the year. For example, the third week of the year 2020 would have a 4-digit DOT date of 0320. Week 01 is the first full week (Sunday through Saturday) of each year.

(4) Tire Identification Number (TIN) : The letters and numbers following the DOT code are the TIN. The TIN shows the manufacturer and plant code, tire size, and date the tire was manufactured. The TIN is molded onto both sides of the tire, although only one side may have the date of manufacture.

(5) Tire Ply Material : The type of cord and number of plies in the sidewall and under the tread.

(6) Uniform Tire Quality Grading (UTQG) : Tire manufacturers are required to grade tires based on three performance factors: tread wear, traction, and temperature resistance. For more information, see *Uniform Tire Quality Grading* ⇨ *361*.

(7) Maximum Cold Inflation Load Limit : Maximum load that can be carried and the maximum pressure needed to support that load. For information on recommended tire pressure see *Tire Pressure* ⇨ *350* and *Vehicle Load Limits* ⇨ *200*.

(8) Temporary Use Only : Only use a temporary spare tire until the road tire is repaired and replaced. This spare tire should not be driven on over 112 km/h (70 mph), or 88 km/h (55 mph) when pulling a trailer, with the proper inflation pressure. See *Full-Size Spare Tire* ⇨ *376*.

Tire Designations

Tire Size

The example shows a typical passenger vehicle tire size.

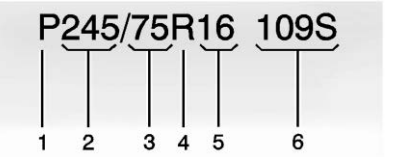

Passenger (P-Metric) Tire

(1) Passenger (P-Metric) Tire : The United States version of a metric tire sizing system. The letter "P" as the first character in the tire size means a passenger vehicle tire engineered to standards set by the U.S. Tire and Rim Association.

(2) Tire Width : The 3-digit number indicates the tire section width in millimeters from sidewall to sidewall.

(3) Aspect Ratio : A 2-digit number that indicates the tire height-to-width measurements. For example, if the tire size aspect ratio is 75, as shown in item (3) of the illustration, it would mean that the tire's sidewall is 75 percent as high as it is wide.

NOT FOR RESALE

(4) Construction Code : A letter code is used to indicate the type of ply construction in the tire. The letter "R" means radial ply construction; the letter "D" means diagonal or bias ply construction.

(5) Rim Diameter : Diameter of the wheel in inches.

(6) Service Description : These characters represent the load index and speed rating of the tire. The load index represents the load carrying capacity a tire is certified to carry. The speed rating is the maximum speed a tire is certified to carry a load.

Tire Terminology and Definitions

Air Pressure : The amount of air inside the tire pressing outward on each square inch of the tire. Air pressure is expressed in kPa (kilopascal) or psi (pounds per square inch).

Aspect Ratio : The relationship of a tire's height to its width.

Belt : A rubber coated layer of cords that is located between the plies and the tread. Cords may be made from steel or other reinforcing materials.

Bead : The tire bead contains steel wires wrapped by steel cords that hold the tire onto the rim.

Bias Ply Tire : A pneumatic tire in which the plies are laid at alternate angles less than 90 degrees to the centerline of the tread.

Cold Tire Pressure : The amount of air pressure in a tire, measured in kPa (kilopascal) or psi (pounds per square inch) before a tire has built up heat from driving. See *Tire Pressure* ➪ *350*.

DOT Markings : A code molded into the sidewall of a tire signifying that the tire is in compliance with the U.S. Department of Transportation (DOT) Motor Vehicle Safety Standards. The DOT code includes the Tire Identification Number (TIN), an alphanumeric designator which can also identify the tire manufacturer, production plant, brand, and date of production.

GVWR : Gross Vehicle Weight Rating. See *Vehicle Load Limits* ➪ *200*.

GAWR FRT : Gross Axle Weight Rating for the front axle. See *Vehicle Load Limits* ➪ *200*.

GAWR RR : Gross Axle Weight Rating for the rear axle. See *Vehicle Load Limits* ➪ *200*.

Intended Outboard Sidewall : The side of an asymmetrical tire, that must always face outward when mounted on a vehicle.

Kilopascal (kPa) : The metric unit for air pressure.

Light Truck (LT-Metric) Tire : A tire used on light duty trucks and some multipurpose passenger vehicles.

Load Index : An assigned number ranging from 1 to 279 that corresponds to the load carrying capacity of a tire.

Maximum Inflation Pressure : The maximum air pressure to which a cold tire can be inflated. The maximum air pressure is molded onto the sidewall.

NOT FOR RESALE

Maximum Load Rating : The load rating for a tire at the maximum permissible inflation pressure for that tire.

Occupant Distribution : Designated seating positions.

Outward Facing Sidewall : The side of an asymmetrical tire that has a particular side that faces outward when mounted on a vehicle. The side of the tire that contains a whitewall, bears white lettering, or bears manufacturer, brand, and/or model name molding that is higher or deeper than the same moldings on the other sidewall of the tire.

Passenger (P-Metric) Tire : A tire used on passenger cars and some light duty trucks and multipurpose vehicles.

Recommended Inflation Pressure : Vehicle manufacturer's recommended tire inflation pressure as shown on the tire placard. See *Tire Pressure* ➪ *350* and *Vehicle Load Limits* ➪ *200*.

Radial Ply Tire : A pneumatic tire in which the ply cords that extend to the beads are laid at 90 degrees to the centerline of the tread.

Rim : A metal support for a tire and upon which the tire beads are seated.

Sidewall : The portion of a tire between the tread and the bead.

Speed Rating : An alphanumeric code assigned to a tire indicating the maximum speed at which a tire can operate.

Traction : The friction between the tire and the road surface. The amount of grip provided.

Tread : The portion of a tire that comes into contact with the road.

Treadwear Indicators : Narrow bands, sometimes called wear bars, that show across the tread of a tire when only 1.6 mm (1/16 in) of tread remains. See *When It Is Time for New Tires* ➪ *359*.

UTQGS (Uniform Tire Quality Grading Standards) : A tire information system that provides consumers with ratings for a tire's traction, temperature, and treadwear. Ratings are determined by tire manufacturers using government testing procedures. The ratings are molded into the sidewall of the tire. See *Uniform Tire Quality Grading* ➪ *361*.

Vehicle Capacity Weight : The number of designated seating positions multiplied by 68 kg (150 lbs) plus the rated cargo load. See *Vehicle Load Limits* ➪ *200*.

Vehicle Maximum Load on the Tire : Load on an individual tire due to curb weight, accessory weight, occupant weight, and cargo weight.

Vehicle Placard : A label permanently attached to a vehicle showing the vehicle's capacity weight and the original equipment tire size and recommended inflation pressure. See “Tire and Loading Information Label” under *Vehicle Load Limits* ➪ *200*.

Tire Pressure

Tires need the correct amount of air pressure to operate effectively.

NOT FOR RESALE

⚠ Warning

Neither tire underinflation nor overinflation is good. Underinflated tires, or tires that do not have enough air, can result in:

- Tire overloading and overheating, which could lead to a blowout
- Premature or irregular wear
- Poor handling
- Reduced fuel economy for internal combustion engine vehicles
- Reduced range for electric vehicles

Overinflated tires, or tires that have too much air, can result in:

- Unusual wear
- Poor handling
- Rough ride
- Needless damage from road hazards

The Tire and Loading Information label on the vehicle indicates the original equipment tires and the correct cold tire inflation pressures. The recommended pressure is the minimum air pressure needed to support the vehicle's maximum load carrying capacity.

For additional information regarding how much weight the vehicle can carry, and an example of the Tire and Loading Information label, see *Vehicle Load Limits* ⇨ *200*. How the vehicle is loaded affects vehicle handling and ride comfort. Never load the vehicle with more weight than it was designed to carry.

When to Check

Check the pressure of the tires once a month or more.

Do not forget the spare, if the vehicle has one. See *Full-Size Spare Tire* ⇨ *376* for additional information.

How to Check

Use a good quality pocket-type gauge to check tire pressure. Proper tire inflation cannot be determined by looking at the tire. Check the tire inflation pressure when the tires are cold, meaning the vehicle has not been driven for at least three hours or no more than 1.6 km (1 mi).

Remove the valve cap from the tire valve stem. Press the tire gauge firmly onto the valve to get a pressure measurement. If the cold tire inflation pressure matches the recommended pressure on the Tire and Loading Information label, no further adjustment is necessary. If the inflation pressure is low, add air until the recommended pressure is reached. If the inflation pressure is high, press on the metal stem in the center of the tire valve to release air.

Re-check the tire pressure with the tire gauge.

Put the valve caps back on the valve stems to keep out dirt and moisture. Use only valve caps designed for the vehicle by

NOT FOR RESALE

GM. Tire Pressure Monitor System sensors could be damaged and would not be covered by the vehicle warranty.

Tire Pressure for High-Speed Operation

Warning

Driving at high speeds, 160 km/h (100 mph) or higher, puts additional strain on tires. Sustained high-speed driving causes excessive heat buildup and can cause sudden tire failure. This could cause a crash, and you or others could be killed. Some high-speed rated tires require inflation pressure adjustment for high-speed operation. When speed limits and road conditions allow the vehicle to be driven at high speeds, make sure the tires are rated for high-speed operation, are in excellent condition, and are set to the correct cold tire inflation pressure for the vehicle load.

NOT FOR RESALE

Vehicles with tire sizes listed in the High Speed Operation Inflation Pressures table require inflation pressure adjustment when driving the vehicle at speeds of 160 km/h (100 mph) or higher. Set the cold tire inflation pressure to the corresponding value in the table for the tire size on the vehicle.

High Speed Operation Inflation Pressures	
Tire Size	**Cold Inflation Pressure kPa (psi)**
275/50R22 111H	270 kPa (39 psi)
285/40R24 112H	290 kPa (42 psi)

Return the tires to the recommended cold tire inflation pressure when high-speed driving has ended. See *Vehicle Load Limits* ➪ *200* and *Tire Pressure* ➪ *350*.

Tire Pressure Monitor System

The Tire Pressure Monitor System (TPMS) uses radio and sensor technology to check tire pressure levels. The TPMS sensors monitor the air pressure in your tires and transmit tire pressure readings to a receiver located in the vehicle.

Each tire, including the spare (if provided), should be checked monthly when cold and inflated to the inflation pressure recommended by the vehicle manufacturer on the vehicle placard or tire inflation pressure label. (If your vehicle has tires of a different size than the size indicated on the vehicle placard or tire inflation pressure label, you should determine the proper tire inflation pressure for those tires.)

As an added safety feature, your vehicle has been equipped with a tire pressure monitoring system (TPMS) that illuminates a low tire pressure telltale when one or more of your tires is significantly under-inflated.

Accordingly, when the low tire pressure telltale illuminates, you should stop and check your tires as soon as possible, and inflate them to the proper pressure. Driving on a significantly under-inflated tire causes the tire to overheat and can lead to tire failure. Under-inflation also reduces fuel efficiency and tire tread life, and may affect the vehicle's handling and stopping ability.

Please note that the TPMS is not a substitute for proper tire maintenance, and it is the driver's responsibility to maintain correct tire pressure, even if under-inflation has not reached the level to trigger illumination of the TPMS low tire pressure telltale.

Your vehicle has also been equipped with a TPMS malfunction indicator to indicate when the system is not operating properly. The TPMS malfunction indicator is combined with the low tire pressure telltale. When the system detects a malfunction, the telltale will flash for

NOT FOR RESALE

approximately one minute and then remain continuously illuminated. This sequence will continue upon subsequent vehicle start-ups as long as the malfunction exists.

When the malfunction indicator is illuminated, the system may not be able to detect or signal low tire pressure as intended. TPMS malfunctions may occur for a variety of reasons, including the installation of replacement or alternate tires or wheels on the vehicle that prevent the TPMS from functioning properly. Always check the TPMS malfunction telltale after replacing one or more tires or wheels on your vehicle to ensure that the replacement or alternate tires and wheels allow the TPMS to continue to function properly.

See *Tire Pressure Monitor Operation* ⇨ *354*.

Tire Pressure Monitor Operation

This vehicle may have a Tire Pressure Monitor System. The system is designed to warn the driver when a low tire pressure condition exists. Tire Pressure Monitor System sensors are mounted onto each tire and wheel assembly, excluding the spare tire and wheel assembly. The sensors monitor the air pressure in the tires and transmit the tire pressure readings to a receiver located in the vehicle.

Caution
Tire sealant materials are not all the same. A non-approved tire sealant could damage the TPMS sensors. TPMS sensor damage caused by using an incorrect tire sealant is not covered by the vehicle warranty. Always use only the GM approved tire sealant available through your dealer or included in the vehicle.

When a low tire pressure condition is detected, the system illuminates the low tire pressure warning light located on the instrument cluster. If the warning light comes on, stop as soon as possible and inflate the tires to the recommended pressure shown on the Tire and Loading Information label. See *Vehicle Load Limits* ⇨ *200*.

A message to check the pressure in a specific tire displays in the Driver Information Center. The low tire pressure warning light and the Driver Information Center warning message come on each time the vehicle is started until the tires are inflated to the correct inflation pressure. Use the Driver Information Center or infotainment screen to view the tire pressure levels. For additional information and details about the Driver Information Center operation and displays, see *Driver Information Center (DIC)* ⇨ *132* or *Vehicle Status* ⇨ *135*.

The low tire pressure warning light may come on in cool weather when the vehicle is first started, and then turn off as the vehicle is driven. This could be an early indicator that the air pressure is getting low and needs to be inflated to the proper pressure.

A Tire and Loading Information label shows the size of the original equipment tires and the correct inflation pressure for the tires when they are cold. See *Vehicle Load Limits* ⇨ *200* for an example of the Tire and Loading Information label and its location. Also see *Tire Pressure* ⇨ *350*.

NOT FOR RESALE

The Tire Pressure Monitor System can warn about a low tire pressure condition, but it does not replace normal tire maintenance. See *Tire Inspection* ➪ *357*, *Tire Rotation* ➪ *358*, and *Tires* ➪ *345*.

Tire Pressure Monitor System Malfunction Light and Message

The Tire Pressure Monitor System will not function properly if one or more of the system sensors are missing or inoperable. When the system detects a malfunction, the low tire pressure warning light flashes for about one minute and then stays on for the remainder of the time the vehicle is on. A Driver Information Center warning message also displays. The malfunction light and Driver Information Center warning message will come on each time the vehicle is started until the problem is corrected. Some of the conditions that can cause these to come on are:

- One of the road tires has been replaced with the spare tire. The spare tire does not have a sensor. The malfunction light and the Driver Information Center message should go off after the road tire is replaced and the sensor matching process is performed successfully. See "Tire Pressure Monitor System Sensor Matching Process" later in this section.
- The sensor matching process was not done or not completed successfully after rotating the tires. The malfunction light and the Driver Information Center message should go off after successfully completing the sensor matching process. See "Tire Pressure Monitor System Sensor Matching Process" later in this section.
- One or more sensors are missing or damaged. The Driver Information Center message and the malfunction light should go off when the sensors are installed and the sensor matching process is performed successfully. See your dealer for service.
- Replacement tires or wheels do not match the original equipment tires or wheels. Tires and wheels other than those recommended could prevent the Tire Pressure Monitor System from functioning properly. See *Buying New Tires* ➪ *359*.
- Operating electronic devices or being near facilities using radio wave frequencies similar to the Tire Pressure Monitor System could cause the sensors to malfunction.

If the system is not functioning properly, it cannot detect or signal a low tire pressure condition. See your dealer for service if the Tire Pressure Monitor System malfunction light and Driver Information Center message come on and stay on.

Tire Fill Alert

⚠ Warning

Overinflating a tire could cause the tire to rupture and you or others could be injured. Do not exceed the maximum pressure listed on the tire sidewall. See *Tire Sidewall Labeling* ➪ *347* and *Vehicle Load Limits* ➪ *200*.

NOT FOR RESALE

If equipped, this feature provides visual and audible alerts outside the vehicle to help when inflating an underinflated tire to the recommended cold tire pressure.

When the low tire pressure warning light comes on:

1. Park the vehicle in a safe, level place.
2. Place the vehicle in P (Park).
3. Set the parking brake.
4. Add air to the tire that is underinflated.

   The turn signal light closest to the tire being inflated with start flashing. When the recommended pressure is reached, the horn sounds once and the turn signal light will stop flashing and turn solid for several seconds before turning off.

Repeat these steps for all underinflated tires that have illuminated the low tire pressure warning light.

If the tire is overinflated by more than 35 kPa (5 psi), the horn will sound multiple times and the turn signal light will continue to flash for several seconds after filling stops.

To release and correct the pressure, while the turn signal light is still flashing, briefly press the center of the valve stem. When the recommended pressure is reached, the horn sounds once and the turn signal light will stop flashing and turn solid for several seconds before turning off.

If the turn signal light does not flash within 15 seconds after starting to inflate the tire, the tire fill alert has not been activated or is not working.

If the hazard warning flashers are on, the tire fill alert visual feedback will not work properly.

The Tire Pressure Monitor System will not activate the tire fill alert properly under the following conditions:

- There is interference from an external device or transmitter.
- The air pressure from the inflation device is not sufficient to inflate the tire.
- There is a malfunction in the Tire Pressure Monitor System.
- There is a malfunction in the horn or turn signal lights.
- The sensor identification code is not registered to the system.
- The sensor battery is low.

If the tire fill alert does not operate due to system interference, move the vehicle about 1 m (3 ft) back or forward and try again. If the tire fill alert feature is not working, use a tire pressure gauge.

Tire Pressure Monitor System Sensor Matching Process – Auto Learn

Each sensor has a unique identification code. The identification code needs to be matched to a new tire/wheel position after rotating the tires or replacing one or more of the system sensors. If equipped with Auto Learn, when a tire is installed, the vehicle must be stationary for about 20 minutes before the system recalculates. The relearn process takes up to 10 minutes, driving at a minimum speed of 20 km/h (12 mph). A dash (-) or pressure value will display in the Driver Information Center. See *Driver Information Center (DIC)* ⇨ *132*. A warning message displays in the Driver Information Center if a problem occurs during the relearn process.

NOT FOR RESALE

Tire Pressure Monitor System Sensor Matching Process – Manual Learn

Each sensor has a unique identification code. The identification code needs to be matched to a new tire/wheel position after rotating the vehicle's tires or replacing one or more of the system sensors. The sensor matching process should also be performed after replacing a spare tire with a road tire containing the Tire Pressure Monitor System sensor. After a successful matching process is completed, the malfunction light and the Driver Information Center message should turn off the next time the vehicle is started.

The sensors are matched to the tire/wheel positions, using a Tire Pressure Monitor System relearn tool, in the following order: driver side front tire, passenger side front tire, passenger side rear tire, and driver side rear tire. See your dealer for service or to purchase a relearn tool. You can also purchase a relearn tool at www.gmglobaltools.com, search on "TPMS Tool," or by calling 844-742-8471.

There are two minutes to match the first tire/wheel position, and five minutes overall to match all four tire/wheel positions. If it takes longer, the matching process stops and must be restarted.

The sensor matching process is:

1. Place the vehicle in P (Park).
2. Set the parking brake.
3. Turn the vehicle on or place the vehicle in Service Mode. See *Ignition Positions* ⇨ *204*.
4. Select the Vehicle Status icon from the infotainment apps screen.
5. Choose "Tire Pressure" or "Tires," then choose "Relearn Sensors."

   The horn sounds twice to signal the receiver is in relearn mode and the TIRE LEARNING ACTIVE message displays on the Driver Information Center or Infotainment screen.
6. Start with the driver side front tire.
7. Place the relearn tool against the tire sidewall, near the valve stem. Then press the button on the tool to activate the sensor.

   The horn sounds once to confirm that the sensor identification code has been matched to this tire and wheel position.
8. Proceed to the passenger side front tire, and repeat the procedure in Step 7.
9. Proceed to the passenger side rear tire, and repeat the procedure in Step 7.
10. Proceed to the driver side rear tire, and repeat the procedure in Step 7.

    The horn sounds twice to indicate the sensor identification code has been matched to the driver side rear tire, and the sensor matching process is no longer active. The TIRE LEARNING ACTIVE message turns off.
11. Turn the vehicle off.
12. Set all four tires to the recommended air pressure level as indicated on the Tire and Loading Information label.

Tire Inspection

We recommend that the tires, including the spare tire, if the vehicle has one, be inspected for signs of wear or damage at least once a month.

Replace the tire if:

- The indicators at three or more places around the tire can be seen.
- There is cord or fabric showing through the tire's rubber.

NOT FOR RESALE

- The tread or sidewall is cracked, cut, or snagged deep enough to show cord or fabric.
- The tire has a bump, bulge, or split.
- The tire has a puncture, cut, or other damage that cannot be repaired well because of the size or location of the damage.

Tire Rotation

Tires should be rotated according to the interval listed in the maintenance schedule. See *Maintenance Schedule* ➪ *395*.

When rotating the tires, inspect the brake pads for signs of wear. See *Brakes* ➪ *325*.

Tires are rotated to achieve a more uniform wear for all tires. The first rotation is the most important.

Anytime unusual wear is noticed, rotate the tires as soon as possible, check for proper tire inflation pressure, and check for damaged tires or wheels. If the unusual wear continues after the rotation, check the wheel alignment. See *When It Is Time for New Tires* ➪ *359* and *Wheel Replacement* ➪ *362*.

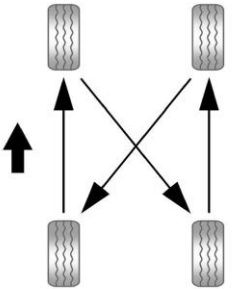

Use this rotation pattern when rotating the tires.

Do not include the spare tire in the tire rotation.

Adjust the front and rear tires to the recommended inflation pressure on the Tire and Loading Information label after the tires have been rotated. See *Tire Pressure* ➪ *350* and *Vehicle Load Limits* ➪ *200*.

Reset the Tire Pressure Monitor System. See *Tire Pressure Monitor Operation* ➪ *354*.

⚠ Warning

Rust or dirt on a wheel, or on the parts to which it is fastened, can cause wheel nuts to become loose over time. The wheel could come off and cause a crash. When changing a wheel, remove any rust or dirt from places where the wheel attaches to the vehicle. In an emergency, a cloth or paper towel can be used; however, use a scraper or wire brush later to remove all rust or dirt.

⚠ Warning

Do not apply grease to the wheel mounting surface, wheel conical seats, or the wheel nuts or bolts. Grease applied to these areas could cause a wheel to become loose or come off, resulting in a crash.

NOT FOR RESALE

Check that all wheel nuts are properly tightened. See “Wheel Nut Torque” under *Capacities and Specifications* ⇨ *403* and “Removing the Flat Tire and Installing the Spare Tire” under *Tire Changing* ⇨ *365*.

Lightly coat the inner diameter of the wheel hub opening with wheel bearing grease after a wheel change or tire rotation to prevent corrosion or rust build-up.

When It Is Time for New Tires

Factors, such as maintenance, temperatures, driving speeds, vehicle loading, and road conditions affect the wear rate of the tires.

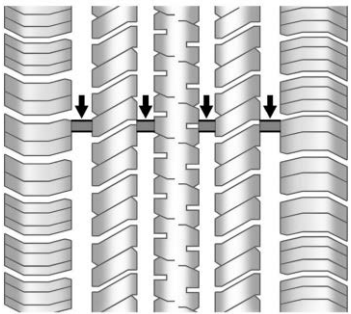

Treadwear indicators are one way to tell when it is time for new tires. Treadwear indicators appear when the tires have only 1.6 mm (1/16 in) or less of tread remaining. See *Tire Inspection* ⇨ *357* and *Tire Rotation* ⇨ *358*.

The rubber in tires ages over time. This also applies to the spare tire, if the vehicle has one, even if it is never used. Multiple factors including temperatures, loading conditions, and inflation pressure maintenance affect how fast aging takes place. GM recommends that tires, including the spare if equipped, be replaced after six years, regardless of tread wear. To identify the age of a tire, use the tire manufacture date, which is the last four digits of the Department of Transportation (DOT) Tire Identification Number (TIN) molded into one side of the tire sidewall. The last four digits of the Tire Identification Number (TIN) indicate the tire manufactured date. The first two digits represent the week and the last two digits, the year. For example, the third week of the year 2020 would have a 4-digit Department of Transportation (DOT) date of 0320. Week 01 is the first full week (Sunday through Saturday) of each year.

Vehicle Storage

Tires age when stored normally mounted on a parked vehicle. Park a vehicle that will be stored for at least a month in a cool, dry, clean area away from direct sunlight to slow aging. This area should be free of grease, gasoline, or other substances that can deteriorate rubber.

Parking for an extended period can cause flat spots on the tires that may result in vibrations while driving. When storing a vehicle for at least a month, remove the tires or raise the vehicle to reduce the weight from the tires.

Buying New Tires

GM has developed and matched specific tires for the vehicle. The original equipment tires installed were designed to meet General Motors Tire Performance Criteria Specification (TPC Spec) system rating. When replacement tires are needed, GM strongly recommends buying tires with the same Tire Performance Criteria Specification (TPC Spec) rating.

GM's exclusive Tire Performance Criteria Specification (TPC Spec) system considers over a dozen critical specifications

NOT FOR RESALE

that impact the overall performance of the vehicle, including brake system performance, ride and handling, traction control, and tire pressure monitoring performance. GM's Tire Performance Criteria Specification (TPC Spec) number is molded onto the tire's sidewall near the tire size.

⚠ Warning

Tires could explode during improper service. Attempting to mount or dismount a tire could cause injury or death. Only your dealer or authorized tire service center should mount or dismount the tires.

⚠ Warning

Mixing tires of different sizes (other than those originally installed on the vehicle), brands, tread patterns, or types may cause loss of vehicle control,

(Continued)

Warning (Continued)

resulting in a crash or other vehicle damage. Use the correct size, brand, and type of tire on all wheels.

⚠ Warning

Using bias-ply tires on the vehicle may cause the wheel rim flanges to develop cracks after many miles of driving. A tire and/or wheel could fail suddenly and cause a crash. Use only radial-ply tires with the wheels on the vehicle.

GM recommends replacing worn tires in complete sets of four. Uniform tread depth on all tires will help to maintain the performance of the vehicle. Braking and handling performance may be adversely affected if all the tires are not replaced at the same time. If proper rotation and maintenance have been done, all four tires should wear out at about the same time. However, if it is necessary to replace only one axle set of worn tires, place the new tires on the rear axle. See *Tire Rotation* ➪ *358*.

If the vehicle tires must be replaced with a tire that does not have a Tire Performance Criteria Specification (TPC Spec) number, make sure they are the same size, load range, speed rating, and construction (radial) as the original tires.

Winter tires with the same speed rating as the original equipment tires may not be available for H, V, W, Y and ZR speed rated tires. Never exceed the winter tires' maximum speed capability when using winter tires with a lower speed rating.

The Tire and Loading Information label indicates the original equipment tires on the vehicle. See *Vehicle Load Limits* ➪ *200*.

NOT FOR RESALE

Different Size Tires and Wheels

⚠ Warning

If different sized wheels are used, there may not be an acceptable level of performance and safety if tires not recommended for those wheels are selected. This increases the chance of a crash and serious injury. Only use GM specific wheel and tire systems developed for the vehicle, and have them properly installed by a GM certified technician.

If wheels or tires are installed that are a different size than the original equipment wheels and tires, vehicle performance, including its braking, ride and handling characteristics, stability, and resistance to rollover may be affected. If the vehicle has electronic systems such as antilock brakes, rollover airbags, traction control, electronic stability control, or all-wheel drive, the performance of these systems can also be affected.

See *Buying New Tires* ➪ *359* and *Accessories and Modifications* ➪ *309*.

Uniform Tire Quality Grading

The following information relates to the system developed by the United States National Highway Traffic Safety Administration (NHTSA), which grades tires by treadwear, traction, and temperature performance. This applies only to vehicles sold in the United States. The grades are molded on the sidewalls of most passenger car tires. The Uniform Tire Quality Grading (UTQG) system does not apply to deep tread, winter tires, compact spare tires, tires with nominal rim diameters of 10 to 12 inches (25 to 30 cm), or to some limited-production tires.

While the tires available on General Motors passenger cars and light trucks may vary with respect to these grades, they must also conform to federal safety requirements and additional General Motors Tire Performance Criteria (TPC) standards.

Quality grades can be found where applicable on the tire sidewall between tread shoulder and maximum section width. For example:

Treadwear 200 Traction AA Temperature A

All Passenger Car Tires Must Conform to Federal Safety Requirements In Addition To These Grades.

Treadwear

The treadwear grade is a comparative rating based on the wear rate of the tire when tested under controlled conditions on a specified government test course. For example, a tire graded 150 would wear one and one-half (1½) times as well on the government course as a tire graded 100. The relative performance of tires depends upon the actual conditions of their use, however, and may depart significantly from the norm due to variations in driving habits, service practices and differences in road characteristics and climate.

NOT FOR RESALE

Traction

The traction grades, from highest to lowest, are AA, A, B, and C. Those grades represent the tire's ability to stop on wet pavement as measured under controlled conditions on specified government test surfaces of asphalt and concrete. A tire marked C may have poor traction performance. Warning: The traction grade assigned to this tire is based on straight-ahead braking traction tests, and does not include acceleration, cornering, hydroplaning, or peak traction characteristics.

Temperature

The temperature grades are A (the highest), B, and C, representing the tire's resistance to the generation of heat and its ability to dissipate heat when tested under controlled conditions on a specified indoor laboratory test wheel. Sustained high temperature can cause the material of the tire to degenerate and reduce tire life, and excessive temperature can lead to sudden tire failure. The grade C corresponds to a level of performance which all passenger car tires must meet under the Federal Motor Safety Standard No. 109. Grades B and A represent higher levels of performance on the laboratory test wheel than the minimum required by law. Warning: The temperature grade for this tire is established for a tire that is properly inflated and not overloaded. Excessive speed, underinflation, or excessive loading, either separately or in combination, can cause heat buildup and possible tire failure.

Wheel Alignment and Tire Balance

The tires and wheels were aligned and balanced at the factory to provide the longest tire life and best overall performance. Adjustments to wheel alignment and tire balancing are not necessary on a regular basis. Consider an alignment check if there is unusual tire wear or the vehicle is significantly pulling to one side or the other. Some slight pull to the left or right, depending on the slope of the road and/or other road surface variations such as troughs or ruts, is normal. If the vehicle is vibrating when driving on a smooth road, the tires and wheels may need to be rebalanced. See your dealer for proper diagnosis.

Wheel Replacement

⚠ Warning

Using the wrong replacement wheels, wheel bolts, or wheel nuts can be dangerous. It could affect the braking and handling of the vehicle. Tires can lose air and cause loss of control, resulting in a crash. Always use the correct wheel, wheel bolts, and wheel nuts for replacement.

⚠ Warning

Replacing a wheel with a used one is dangerous. How it has been used or how far it has been driven may be unknown. It could fail suddenly and cause a crash. When replacing wheels, use a new GM original equipment wheel.

NOT FOR RESALE

Caution

The wrong wheel can also cause problems with bearing life, brake cooling, speedometer or odometer calibration, headlight aim, bumper height, vehicle ground clearance, and tire or tire chain clearance to the body and chassis.

Replace any wheel that is bent, cracked, or badly rusted or corroded. If wheel nuts keep coming loose, the wheel, wheel bolts, and wheel nuts should be replaced. If the wheel leaks air, replace it. Some aluminum wheels can be repaired. See your dealer if any of these conditions exist.

Your dealer will know the kind of wheel that is needed.

Each new wheel should have the same load-carrying capacity, diameter, width, offset, and be mounted the same way as the one it replaces.

Replace wheels, wheel bolts, wheel nuts, or Tire Pressure Monitor System sensors with new GM original equipment parts.

Tire Chains and Other Traction Devices

Warning

Do not use tire chains if the vehicle has a tire size(s) listed below. There is not enough clearance. Tire chains used on a vehicle without the proper amount of clearance can cause damage to the brakes, suspension, or other vehicle parts. The area damaged by the tire chains could cause loss of control and a crash. Use another type of traction device only if its manufacturer recommends it for the vehicle's tire size combination and road conditions. Follow that manufacturer's instructions. To avoid vehicle damage, drive slow and readjust or remove the traction device if it contacts the vehicle. Do not spin the wheels. If traction devices are used, install them on the tires of the rear axle only.

- 275/50R22
- 285/40R24

Caution

If your vehicle is equipped with the tire size(s) listed below, use textile traction devices only, such as snow socks, that are the proper size for the tires. Install them on the tires of the rear axle only. Drive slowly and follow the traction device manufacturer's instructions. Driving too fast or spinning the wheels, with the traction device installed, can damage the traction device.

- 275/50R22
- 285/40R24

If a Tire Goes Flat

Warning

Driving on a flat tire will cause permanent damage to the tire. Re-inflating a tire after it has been driven on while severely underinflated or flat may cause a blowout and a serious crash. Never attempt to re-inflate a tire that has been driven on

(Continued)

NOT FOR RESALE

Warning (Continued)

while severely underinflated or flat. Have your dealer or an authorized tire service center repair or replace the flat tire as soon as possible.

It is unusual for a tire to blow out while driving, especially if the tires are maintained properly. It is much more likely for a tire to experience a slow leak. See *Tires* ➪ *345*.

In the event of a blowout, follow these tips:

- A front tire blowout causes the vehicle to pull toward the side of the flat. Take your foot off the accelerator pedal and grip the steering wheel firmly. Steer to maintain lane position, and then gently brake to a stop.
- A rear blowout, particularly on a curve, acts much like a skid and may require the same correction as used in a skid. Stop pressing the accelerator pedal and steer to straighten the vehicle. It may be very bumpy and noisy. Gently brake to a stop.

If a tire goes flat, avoid further tire and wheel damage by driving slowly to a level place, well off the road, if possible. Turn on the hazard warning flashers. See *Hazard Warning Flashers* ➪ *146*.

⚠ Warning

Lifting a vehicle and getting under it to do maintenance or repairs is dangerous without the appropriate safety equipment and training. If a jack is provided with the vehicle, it is designed only for changing a flat tire. If it is used for anything else, you or others could be badly injured or killed if the vehicle slips off the jack. If a jack is provided with the vehicle, only use it for changing a flat tire.

If your vehicle is loaded at or near maximum cargo capacity, it may be difficult to fit the jack under the vehicle due to the environment (shoulder slope, road debris, etc.). Removal of some weight may improve the ability to fit the jack under the vehicle at the correct jacking location.

⚠ Warning

Changing a tire can be dangerous. The vehicle can slip off the jack and roll over or fall causing injury or death. Find a level place to change the tire. Do not attempt to change a tire on unlevel, off-road terrain. To help prevent the vehicle from moving:

1. Set the parking brake.
2. Shift the vehicle to P (Park).
3. For vehicles with four-wheel drive with an N (Neutral) transfer case position, be sure the transfer case is in a drive gear — not in N (Neutral).
4. Turn off the engine and do not restart while the vehicle is raised.
5. Do not allow passengers to remain in the vehicle.
6. Place wheel blocks, if equipped, on both sides of the tire at the opposite corner of the tire being changed.

To safely change a flat tire:

NOT FOR RESALE

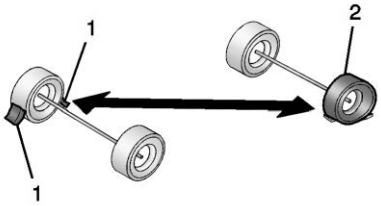

1. If equipped, place wheel blocks (1), as shown, to prevent the vehicle from moving.
2. Use the jacking equipment to change the flat tire (2). See *Tire Changing* ⇨ *365*.

Tire Changing

Before changing a flat tire, see "Hands-Free Operation" under *Liftgate* ⇨ *23*.

Performance Brake Package RPO J49 or RPO 5JL

The original spare tire/wheel will not fit onto the front axle if equipped with the performance brake package RPO J49 or RPO 5JL. If there is a flat tire on the front axle, a tire/wheel from the rear axle must be used to make the repair. The spare tire will then replace the tire/wheel that is removed from the rear axle.

If equipped with the performance brake package RPO J49 or RPO 5JL, and the flat tire is on the front axle, stop after performing all steps in Removing the Spare Tire and Tools and do the following. Otherwise, continue with the procedure:

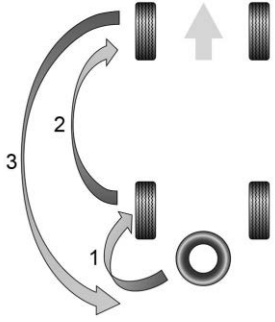

1. Remove the rear tire and replace it with the spare tire by performing all steps in Removing the Flat Tire and Installing the Spare Tire.
2. Perform all steps in Removing the Flat Tire and Installing the Spare Tire again this time replacing the flat front tire with the rear tire.
3. Proceed to Storing a Flat or Spare Tire and Tools.

Removing the Spare Tire and Tools

The equipment needed to change a flat tire is stored in the rear of the vehicle. The jacking tools are under the load floor, secured with velcro straps. The jack is behind a door in the trim panel on the driver side.

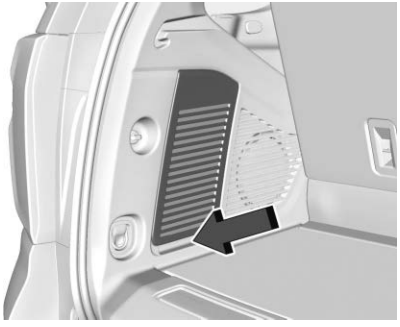

1. Pull to open the trim panel door.

NOT FOR RESALE

The third row driver side seat may need to be folded to access the trim panel door.

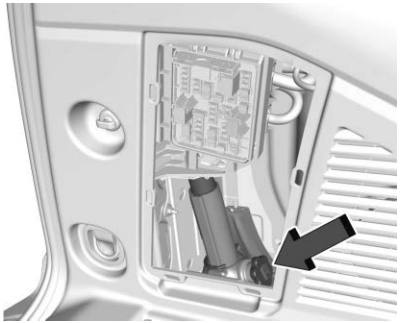

2. Turn the jack knob counterclockwise to release the jack and wheel blocks from the bracket. If equipped, remove the wheel blocks from the jack and place the wheel blocks on both sides of the tire at the opposite corner of the tire being changed. See *If a Tire Goes Flat* ⇨ *363* for more information on the placement of the wheel blocks. Place the jack and wheel blocks near the tire being changed.

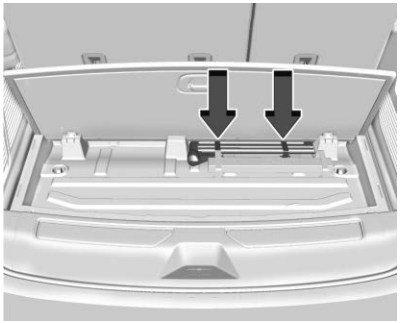

Short Wheel Base Shown, Extended Wheel Base Similar

3. Lift the load floor. Remove the jacking tools and place them near the tire being changed.

Use the following tools:

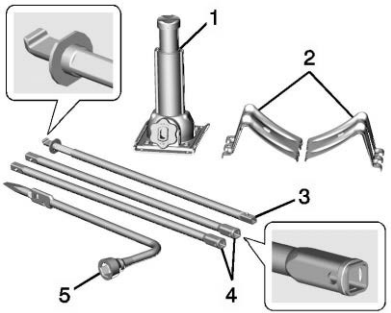

1. Jack
2. Wheel Blocks
3. Jack Handle
4. Jack Handle Extensions
5. Wheel Wrench

NOT FOR RESALE

To access the spare tire, refer to the following illustrations and instructions:

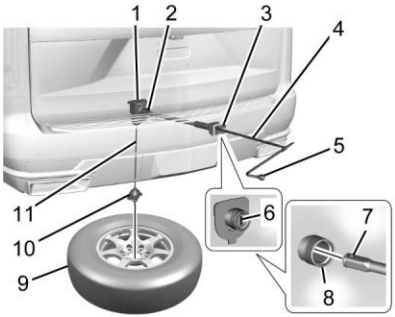

1. Hoist Assembly
2. Hoist Shaft
3. Hoist Shaft Access Cover/Hole
4. Jack Handle Extensions
5. Wheel Wrench
6. Spare Tire Lock
7. Hoist End of Extension Tool
8. Hoist Shaft Access Hole
9. Spare Tire (Valve Stem Pointed Up)
10. Tire/Wheel Retainer
11. Hoist Cable

1. Open the spare tire lock cover on the bumper and use the mechanical key to remove the spare tire lock (6). To remove the spare tire lock, insert the mechanical key, turn, and pull straight out.

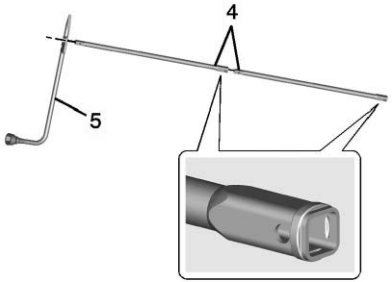

2. Assemble the jack handle extensions (4) and wheel wrench (5), as shown.

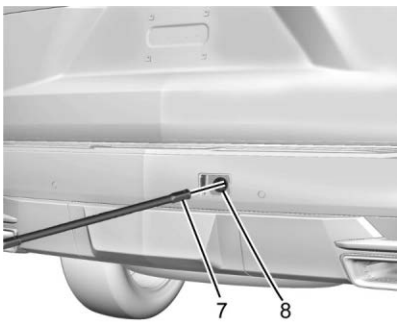

NOT FOR RESALE

3. Insert the hoist end (open end) of the extension tool (7) through the hoist shaft access hole (8) in the rear bumper until you feel engagement with the hoist assembly (1). Only a minimal amount of the jack handle extension end will be visible.

   Do not use the chiseled end of the wheel wrench (5).

   Be sure the hoist end of the extension tool (7) connects to the hoist shaft (2). The ribbed square end of the extension tool is used to lower the spare tire.

4. Turn the wheel wrench (5) counterclockwise to lower the spare tire (9) to the ground. Continue to turn the wheel wrench (5) until the spare tire (9) can be pulled out from under the vehicle.

5. Pull the spare tire (9) out from under the vehicle.

6. Tilt the spare tire toward the vehicle with some slack in the hoist cable (11) to access the tire/wheel retainer (10).

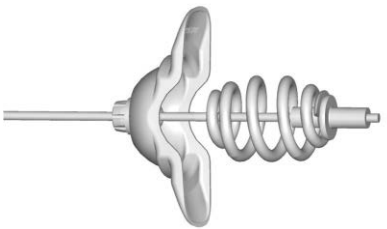

   Tilt the retainer and pull it and the cable and spring through the center of the wheel.

7. Put the spare tire near the flat tire.

Removing the Flat Tire and Installing the Spare Tire

1. Do a safety check before proceeding. See *If a Tire Goes Flat* ⇨ *363* for more information.

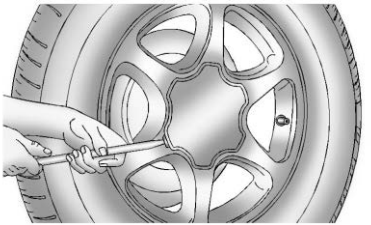

2. If the vehicle has wheel nut caps, loosen them by turning the wheel wrench counterclockwise.

   If the vehicle has a center cap with wheel nut caps, the wheel nut caps are designed to stay with the center cap after they are loosened. Remove the entire center cap.

   If the wheel has a smooth center cap, place the chisel end of the wheel wrench in the slot on the wheel, and gently pry it out.

NOT FOR RESALE

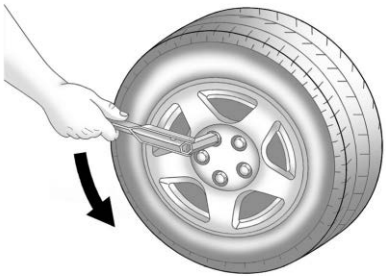

3. Use the wheel wrench to loosen all the wheel nuts. Turn the wheel wrench counterclockwise to loosen the wheel nuts. Do not remove the wheel nuts yet.

⚠ Warning

To avoid personal injury and vehicle damage, disable the power assist steps before using a jack or placing an object under the vehicle. See *Power Assist Steps* ⇨ *28*.

Caution

Only raise the vehicle from the jacking locations shown. Raising the vehicle from the rear could damage the frame or other components. The damage may not be covered by the vehicle warranty.

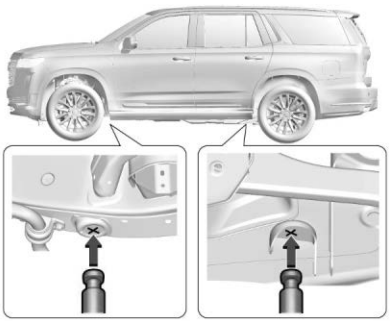

Vehicle Jacking Locations

4. Position the jack lift head as shown, at the jacking location nearest the flat tire. The jack must not be used in any other position.

NOT FOR RESALE

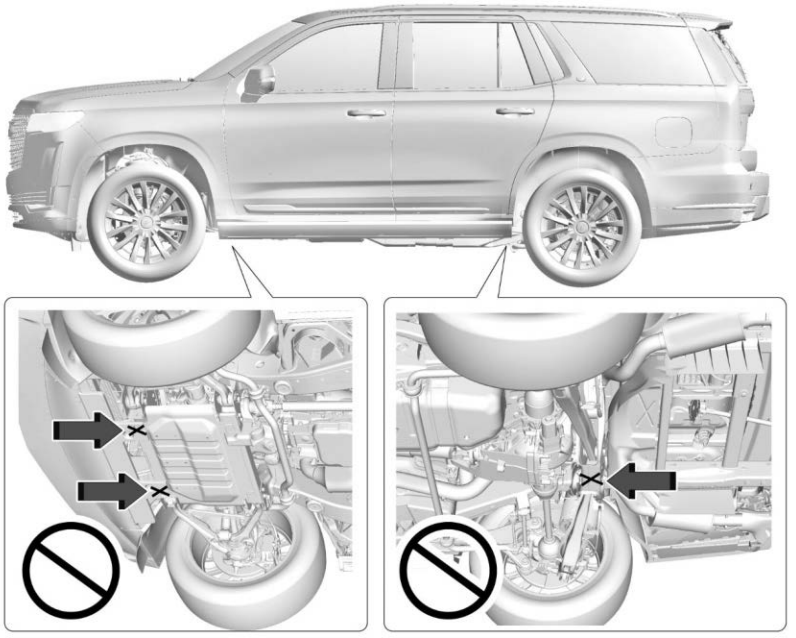

Some Examples of Where Not to Jack

⚠ Warning

Getting under a vehicle when it is lifted on a jack is dangerous. If the vehicle slips off the jack, you could be badly injured or killed. Never get under a vehicle when it is supported only by a jack.

⚠ Warning

Raising the vehicle with the jack improperly positioned can damage the vehicle and even make the vehicle fall. To help avoid personal injury and vehicle damage, be sure to fit the jack lift head into the proper location before raising the vehicle.

⚠ Warning

The jack has a feature to limit its travel to prevent overextension. When the height limit is reached, an increase in resistance if felt when attempting to raise the jack farther. Raising the jack past the height limit can damage the jack pin and cause the

(Continued)

NOT FOR RESALE

Warning (Continued)

jack to lock into an overextended position or not lower fully. Do not attempt to force the jack higher once the height limit is reached.

5. Raise the vehicle by turning the wheel wrench clockwise in the jack. Raise the vehicle far enough off the ground so there is enough room for the spare tire to fit under the wheel well.

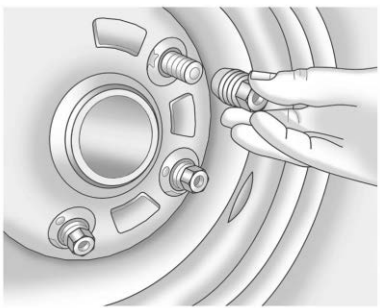

6. Remove all of the wheel nuts.

7. Remove the flat tire.

⚠ Warning

Rust or dirt on a wheel, or on the parts to which it is fastened, can cause wheel nuts to become loose over time. The wheel could come off and cause a crash. When changing a wheel, remove any rust or dirt from places where the wheel attaches to the vehicle. In an emergency, a cloth or paper towel can be used; however, use a scraper or wire brush later to remove all rust or dirt.

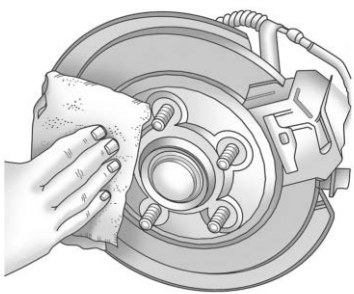

8. Remove any rust or dirt from the wheel bolts, mounting surfaces, and spare wheel.

9. Place the spare tire on the wheel-mounting surface.

⚠ Warning

Never use oil or grease on bolts or nuts because the nuts might come loose. The vehicle's wheel could fall off, causing a crash.

10. Reinstall the wheel nuts. Tighten each nut by hand. Then use the wheel wrench to tighten the nuts until the wheel is held against the hub.

11. Turn the wheel wrench counterclockwise to lower the vehicle. Lower the jack completely.

NOT FOR RESALE

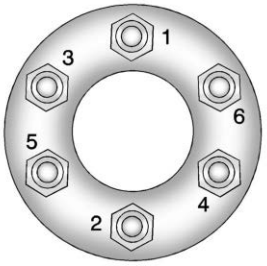

12. Tighten the nuts firmly in a crisscross sequence as shown by turning the wheel wrench clockwise.

⚠ Warning

If wheel studs are damaged, they can break. If all the studs on a wheel broke, the wheel could come off and cause a crash. If any stud is damaged because of a loose-running wheel, it could be that all of the studs are damaged. To be sure, replace all studs on the wheel. If the stud holes in a wheel have become larger, the wheel

(Continued)

Warning (Continued)

could collapse in operation. Replace any wheel if its stud holes have become larger or distorted in any way. Inspect hubs and hub-piloted wheels for damage. Because of loose running wheels, piloting pad damage may occur and require replacement of the entire hub, for proper centering of the wheels. When replacing studs, hubs, wheel nuts or wheels, be sure to use GM original equipment parts.

⚠ Warning

Wheel nuts that are improperly or incorrectly tightened can cause the wheels to become loose or come off. The wheel nuts should be tightened with a torque wrench to the proper torque specification after replacing. Follow the torque specification supplied by the aftermarket manufacturer when using accessory locking wheel nuts. See *Capacities and Specifications* ⇨ *403* for original equipment wheel nut torque specifications.

Caution

Improperly tightened wheel nuts can lead to brake pulsation and rotor damage. To avoid expensive brake repairs, evenly tighten the wheel nuts in the proper sequence and to the proper torque specification. See *Capacities and Specifications* ⇨ *403* for the wheel nut torque specification.

When reinstalling the regular wheel and tire, also reinstall either the center cap or the bolt-on hub cap, depending on which one the vehicle has.

- For center caps, line up the tab on the center cap with the slot in the wheel. The cap only goes in one way. Place the cap on the wheel and press until it snaps into place.
- For bolt-on hub caps, line up the plastic nut caps with the wheel nuts and tighten clockwise by hand to get them started. Then tighten with the wheel wrench until snug.

NOT FOR RESALE

Storing a Flat or Spare Tire and Tools

⚠ Warning

Storing a jack, a tire, or other equipment in the passenger compartment of the vehicle could cause injury. In a sudden stop or collision, loose equipment could strike someone. Store all these in the proper place.

⚠ Warning

Failure to follow these tire storage instructions carefully could result in personal injury or property damage if the hoist cable fails or if the tire comes loose. Make sure the tire is stored securely before driving.

Caution

Always store the spare tire or flat tire with the valve stem pointed up. Stowing a tire with the valve stem pointed down could result in damage to the wheel.

Caution

The tire hoist is designed to be raised and lowered with tension on the cable. If the hoist must be raised or lowered without a tire attached, do so only by hand, and at a slow pace, to avoid damaging the mechanism. Do not use power tools.

⚠ Warning

An improperly stored spare tire could come loose and cause a crash. To avoid personal injury or property damage, always store the spare tire when the vehicle is parked on a level surface.

The flat tire must be stored inside of the vehicle and the hoist must be raised without a tire attached. See “Raising the Hoist without a Tire Attached” and then “Storing a Flat Tire Inside of the Vehicle” later in this section.

When the flat tire has been fixed and placed back on the vehicle, refer to the following graphics and instructions to replace the spare tire under the rear of the vehicle in the spare tire hoist:

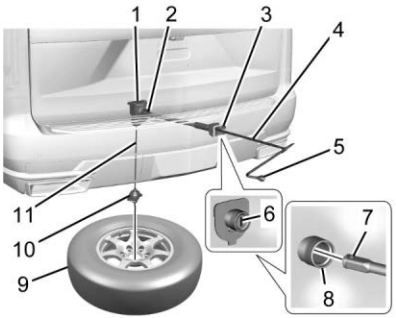

1. Hoist Assembly
2. Hoist Shaft
3. Hoist Shaft Access Cover/Hole
4. Jack Handle Extension
5. Wheel Wrench
6. Spare Tire Lock
7. Hoist End of Extension Tool
8. Hoist Shaft Access Hole
9. Spare Tire (Valve Stem Pointed Up)
10. Tire/Wheel Retainer
11. Hoist Cable

NOT FOR RESALE

1. Put the tire (9) on the ground at the rear of the vehicle with the valve stem pointed up, and to the rear.
2. Tilt the tire toward the vehicle. Separate the tire/wheel retainer from the guide pin. Pull the pin through the center of the wheel. Tilt the retainer down through the center wheel opening.

   Make sure the retainer is fully seated across the underside of the wheel.

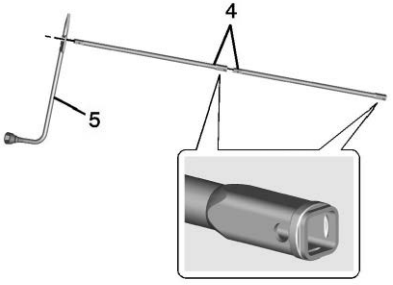

3. Assemble the jack handle extensions (4) and wheel wrench (5).

Caution

Use of an air wrench or other power tools with the hoist mechanism is not recommended and could damage the system. Use only the tools supplied with the hoist mechanism.

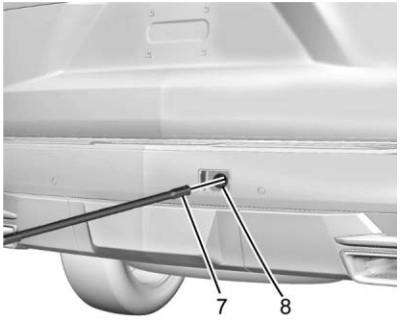

4. Insert the open end of the extension (7) through the hole in the rear bumper (8) (hoist shaft access hole).
5. Raise the tire part way upward. Make sure the retainer is seated in the wheel opening.
6. Raise the tire fully against the underside of the vehicle by turning the wheel wrench clockwise until you hear two clicks or feel it skip twice. The cable cannot be overtightened.

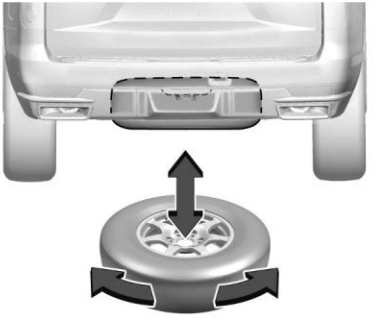

7. Make sure the tire is stored securely. Push, pull, and then try to turn the tire. If the tire moves, use the wheel wrench to tighten the cable.

   Repeat this tightness check procedure when checking the spare tire pressure according to the scheduled maintenance information or any time the spare tire is handled due to service of other components.

NOT FOR RESALE

Correctly Stored

Incorrectly Stored

8. Reinstall the spare tire lock.
9. Reinstall the hoist shaft access cover.

Storing the Tools

To store the tools:

1. Return the tools (wheel wrench, jack handle, and jack handle extensions) to the tool bag. Use the velcro straps to secure the tool bag under the load floor in the cargo area.
2. Position the jack and wheel blocks in the driver side trim panel over the wheelhouse.
3. Turn the jack knob clockwise until the jack is secured tight in the mounting bracket. Be sure to position the holes in the base of the jack onto the pin in the mounting bracket.
4. Close the trim panel door.

Raising the Hoist without a Tire Attached

The hoist must be raised temporarily, without a tire attached. Refer to the following instructions.

1. Insert the hoist end (open end) of the extension tool (7) through the hoist shaft access hole (8) in the rear bumper until you feel engagement with the hoist assembly (1).
2. Turn the wheel wrench clockwise to slowly raise the hoist cable (11) until the tire/wheel retainer (10) rests against the underside of the hoist assembly (1).
3. Continue turning the wheel wrench until two clicks are heard or the hoist skips twice. At that point, the hoist cable is fully raised and secure. The cable cannot be overtightened.
4. Reinstall the spare tire lock.
5. Reinstall the hoist shaft access cover.

Storing a Flat Tire Inside of the Vehicle

The flat tire must be stored inside of the vehicle using the provided flat tire secure strap.

1. Store the tools. See “Storing the Tools” earlier in this section.
2. The third row seat must be folded down to provide sufficient space to store the flat tire. If the third row seat cannot be folded down, the flat tire cannot be stored and must be left in a safe location, to be picked up at a later time.

NOT FOR RESALE

3. Once there is sufficient space in the rear of the vehicle, lift the flat tire and place it on top of the load floor, with the valve stem pointed up.

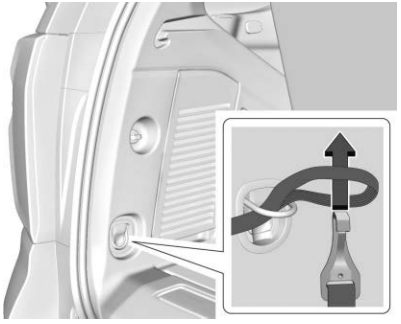

4. Remove the flat tire secure strap from the glove box and place the loop end of the strap through the cargo tie-down. Place the hook end of the strap through the loop and pull it until the strap is fastened securely to the tie-down.

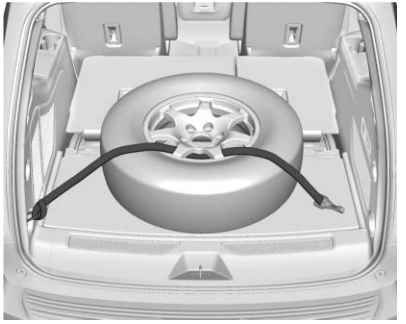

5. Route the hook end of the strap through the wheel, as shown.
6. Attach the hook to the other cargo tie-down in the rear of the vehicle.
7. Tighten the strap.

Full-Size Spare Tire

If this vehicle came with a full-size spare tire, it was fully inflated when new, however, it can lose air over time. Check the inflation pressure regularly. See *Tire Pressure* ⇨ *350* and *Vehicle Load Limits* ⇨ *200* for information regarding proper tire inflation and loading the vehicle. For instructions on how to remove, install, or store a spare tire, see *Tire Changing* ⇨ *365*.

After installing the spare tire on the vehicle, stop as soon as possible and check that the spare is correctly inflated. The spare tire is made to perform well at speeds up to 112 km/h (70 MPH) at the recommended inflation pressure, so you can finish your trip.

Have the damaged or flat road tire repaired or replaced and installed back onto the vehicle as soon as possible so the spare tire will be available in case it is needed again. Do not mix tires and wheels of different sizes, because they will not fit. Keep the spare tire and its wheel together.

Caution

If the vehicle has four-wheel drive and a different size spare tire is installed, do not drive in four-wheel drive until the flat tire is repaired and/or replaced. The vehicle could be damaged and the repairs would not be covered by the warranty. Never use four-wheel drive when a different size spare tire is installed on the vehicle.

The vehicle may have a different size spare tire than the road tires originally installed on the vehicle. This spare tire was developed for use on this vehicle, so it is all right to drive

NOT FOR RESALE

on it. If the vehicle has four-wheel drive and a different size spare tire is installed, drive only in two-wheel drive.

If the vehicle has a spare tire that does not match the original road tires and wheels in size and type, do not include the spare in the tire rotation.

If equipped with a temporary use full-size spare tire, it is indicated on the tire sidewall. See *Tire Sidewall Labeling* ⇨ *347*. This spare tire should not be driven on over 112 km/h (70 mph), or 88 km/h (55 mph) when pulling a trailer, at the proper inflation pressure. Repair and replace the road tire as soon as it is convenient, and stow the spare tire for future use.

Jump Starting

Jump Starting - North America

For more information about the vehicle battery, see *Battery - North America* ⇨ *327*.

If the vehicle battery is dead, follow these steps to safely use another vehicle and jumper cables to start your vehicle.

⚠ Warning

WARNING: Battery posts, terminals and related accessories can expose you to chemicals including lead and lead compounds, which are known to the State of California to cause cancer and birth defects or other reproductive harm. Wash hands after handling. For more information go to www.P65Warnings.ca.gov.

See *California Proposition 65 Warning* ⇨ *1*.

⚠ Warning

Batteries can hurt you. They can be dangerous because:

- They contain acid that can burn you.
- They contain gas that can explode or ignite.
- They contain enough electricity to burn you.

If you do not follow these steps exactly, some or all of these things can hurt you.

Caution

Ignoring these steps could result in costly damage to the vehicle that would not be covered by the vehicle warranty. Trying to start the vehicle by pushing or pulling it will not work, and it could damage the vehicle.

Caution

If the jumper cables are connected or removed in the wrong order, electrical shorting may occur and damage the vehicle. The repairs would not be covered by the vehicle warranty. Always connect and remove the jumper cables in the correct order, making sure that the cables do not touch each other or other metal.

NOT FOR RESALE

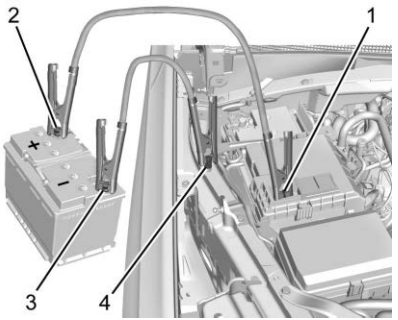

Connection Points and Sequence

1. Discharged Battery Positive (+) Terminal
2. Good Battery Positive (+) Terminal
3. Good Battery Negative (–) Terminal
4. Discharged Battery Negative (–) Grounding Point

The good battery positive (+) terminal and the good battery negative (–) terminal are on the battery of the vehicle providing the jump start.

The discharged battery positive (+) terminal and the discharged battery negative (–) grounding point are on the passenger side of the vehicle.

The discharged battery positive (+) terminal is under a cover. Open the cover to expose the terminal.

Caution

If the other vehicle does not have a 12-volt system with a negative ground, both vehicles can be damaged. Only use a vehicle that has a 12-volt system with a negative ground for jump starting.

1. Check the other vehicle. It must have a 12-volt battery with a negative ground system.
2. If you have a vehicle with two batteries, you should know before you begin that, especially in cold weather, you may not be able to get enough power from a single battery in another vehicle to start your engine. If your vehicle has more than one battery, using the battery that is closer to the starter will reduce electrical resistance. This is located on the passenger side, in the rear of the engine compartment.
3. Get the vehicles close enough so the jumper cables can reach, but be sure the vehicles are not touching each other. If they are, it could cause an unwanted ground connection. You would not be able to start your vehicle, and the bad grounding could damage the electrical systems.
4. To avoid the possibility of the vehicles rolling, set the parking brake firmly on both vehicles involved in the jump start procedure. Put the automatic transmission in P (Park) before setting the parking brake. If you have a four-wheel-drive vehicle, be sure the transfer case is in a drive gear, not in N (Neutral).

Caution

If any accessories are left on or plugged in during the jump starting procedure, they could be damaged. The repairs would not be covered by the vehicle warranty. Whenever possible, turn off or unplug all accessories on either vehicle when jump starting.

5. Turn the ignition off on both vehicles. Unplug unnecessary accessories plugged into the accessory power outlets. Turn off the radio and all the lights that are not needed. This will avoid sparks and help save both batteries and the radio.

NOT FOR RESALE

6. Open the hood on the other vehicle and locate the positive (+) and negative (–) terminal locations on that vehicle.

⚠ Warning

An electric fan can start up even when the engine is not running and can injure you. Keep hands, clothing, and tools away from any underhood electric fan.

⚠ Warning

Using a match near a battery can cause battery gas to explode. People have been hurt doing this, and some have been blinded. Use a flashlight if you need more light.

Battery fluid contains acid that can burn you. Do not get it on you. If you accidentally get it in your eyes or on your skin, flush the place with water and get medical help immediately.

⚠ Warning

Fans or other moving engine parts can injure you badly. Keep your hands away from moving parts once the engine is running.

⚠ Warning

Always inspect jumper cables prior to use. Jumper cables with loose or missing insulation could shock you or cause vehicle damage. Do not use jumper cables that appear damaged.

7. Check that the jumper cables do not have loose or missing insulation.

   Before you connect the cables, here are some basic things you should know. Positive (+) will go to positive (+) or to a remote positive (+) terminal if the vehicle has one. Negative (–) will go to a heavy, unpainted metal engine part or to a remote negative (–) terminal if the vehicle has one.

   Do not connect positive (+) to negative (–) or you will get a short that would damage the battery and maybe other parts too. And do not connect the negative (–) cable to the negative (–) terminal on the dead battery because this can cause sparks.

8. Connect one end of the red positive (+) cable to the discharged battery positive (+) terminal.

9. Do not let the other end touch metal. Connect it to the good battery positive (+) terminal. Use a remote positive (+) terminal if the vehicle has one.

10. Connect one end of the black negative (–) cable to the good battery negative (–) terminal. Use a remote negative (–) terminal if the vehicle has one.

    Do not let the other end touch anything until the next step.

11. Connect the other end of the negative (–) cable to the discharged battery negative (–) grounding point.

12. Start the vehicle with the good battery and run the engine for a while.

13. Try to start the vehicle that had the dead battery. If it will not start after a few tries, it probably needs service.

NOT FOR RESALE

Jumper Cable Removal

To remove the jumper cables, reverse Steps 8–11 in exact order.

After starting the disabled vehicle and removing the jumper cables, allow it to idle for several minutes.

Towing the Vehicle

Transporting a Disabled Vehicle

Caution

Incorrectly transporting a disabled vehicle may cause damage to the vehicle. Use proper tire straps to secure the vehicle to the flatbed tow truck. Do not strap or hook to any frame, underbody, or suspension component not specified below. Do not move vehicles with drive axle tires on the ground. Damage is not covered by the vehicle warranty.

Caution

The vehicle may be equipped with an Electric Parking Brake (EPB) and/or an electronic shifter. In the event of a loss of 12-volt battery power, the EPB cannot be released, and the vehicle cannot be shifted to N (Neutral). Tire skates or dollies must be used under the non-rolling tires to prevent damage while loading/unloading the vehicle. Dragging the vehicle will cause damage not covered by the vehicle warranty.

Contact a professional towing service to transport a disabled vehicle. GM recommends a flatbed tow truck to transport a disabled vehicle. Use ramps to help reduce approach angles, if necessary.

The vehicle must be in N (Neutral) and the electric parking brake must be released when loading the vehicle onto a flatbed tow truck.

- If the vehicle is equipped with car wash mode and has 12-volt battery power, see “Car Wash Mode” under *Automatic Transmission* ⇨ *210* to place the vehicle in N (Neutral).
- If the 12-volt battery is dead and/or the engine will not start, the vehicle will not move. Try to jump start the vehicle. See *Jump Starting - North America* ⇨ *377* and if the jump start is successful, retry the “Car Wash Mode” procedure.
- If jump starting is unsuccessful, the vehicle will not move. Tire skates or dollies must be used under the non-rolling tires to prevent vehicle damage.

Front Attachment Points

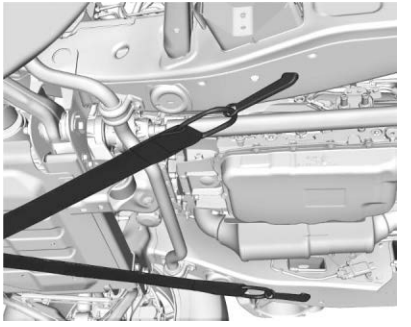

NOT FOR RESALE

The vehicle is equipped with specific attachment points to be used to pull the vehicle onto a flatbed car carrier from a flat road surface. Do not use these attachment points to pull the vehicle from snow, mud, or sand.

Recreational Vehicle Towing

⚠ Warning

Never attempt to tow a vehicle with the battery connected. Follow every step in this section to avoid unintended responses from steering, braking, suspension, or other vehicle systems.

Recreational vehicle towing means towing the vehicle behind another vehicle, such as a motor home. The two most common types of recreational vehicle towing are dinghy and dolly towing. Dinghy towing is towing the vehicle with all four wheels on the ground. Dolly towing is towing the vehicle with two wheels on the ground and two wheels on a dolly.

Follow the tow vehicle manufacturer's instructions. See your dealer or trailering professional for additional advice and equipment recommendations.

Here are some important things to consider before recreational vehicle towing:

- Before towing the vehicle, become familiar with the local laws that apply to recreational vehicle towing. These laws may vary by region.
- What is the towing capacity of the towing vehicle? Be sure to read the tow vehicle manufacturer's recommendations.
- What is the distance that will be traveled? Some vehicles have restrictions on how far and how long they can tow.
- Is the proper towing equipment going to be used? See your dealer or trailering professional for additional advice and equipment recommendations.
- Is the vehicle ready to be towed? Just as preparing the vehicle for a long trip, make sure the vehicle is prepared to be towed.

Caution

Use of a shield mounted in front of the vehicle grille could restrict airflow and cause damage to the transmission. The repairs would not be covered by the vehicle warranty. If using a shield, only use one that attaches to the towing vehicle.

Caution

Do not install tow hardware that interferes with the lower shutters. Shutters cannot be removed. Removal of the shutters can cause damage to the engine that will not be covered by the vehicle warranty. If using tow hardware, only install hardware that does not require the removal of the shutters.

V-Series Vehicles Only

Caution

Dolly towing or dinghy towing may damage the vehicle. Always put the vehicle on a flatbed truck or trailer.

NOT FOR RESALE

The vehicle was neither designed nor intended to be towed with any of its wheels on the ground. If your vehicle is disabled and needs to be towed, see *Transporting a Disabled Vehicle* ⇨ *380*.

Dinghy Towing

Two-Wheel-Drive Vehicles

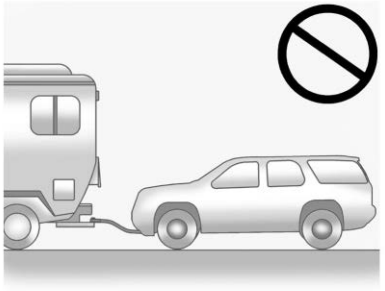

Caution

If the two-wheel-drive vehicle is towed with all four wheels on the ground, the drivetrain components could be damaged. The repairs would not be covered by the vehicle warranty.

Two-wheel-drive vehicles should not be towed with all four wheels on the ground.

Four-Wheel-Drive Vehicles

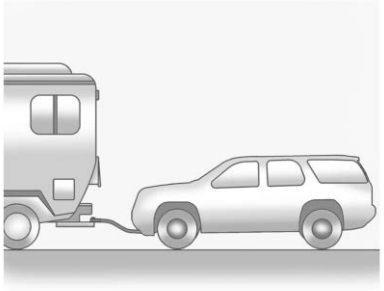

Only dinghy tow four-wheel-drive vehicles with a two speed transfer case that has an N (Neutral) and a 4↓ setting.

⚠ Warning

Shifting a four-wheel-drive vehicle's transfer case into N (Neutral) can cause the vehicle to roll even if the transmission is in P (Park). You or others could be injured. Set the parking brake before shifting the transfer case to N (Neutral).

To dinghy tow:

1. Position the vehicle being towed behind the tow vehicle, facing forward and on a level surface.
2. Securely attach the vehicle being towed to the tow vehicle.
3. Apply the parking brake and start the engine.
4. Shift the transfer case to N (Neutral). See “Shifting into N (Neutral)” under *Four-Wheel Drive* ⇨ *215*.
5. If equipped with air suspension:
   - 5.1 Close all doors, the luggage compartment lid, and the hood.
   - 5.2 Set the vehicle to normal ride height. See *Air Suspension* ⇨ *228*.
   - 5.3 Enable Alignment Mode, from the infotainment app screen, select Settings > Vehicle > Suspension > Alignment Mode.
   - 5.4 Wait at least 30 seconds.
   - 5.5 Disable Alignment Mode and enable Service Mode. From the infotainment app screen, go

NOT FOR RESALE

to Settings > Vehicle > Suspension > disable Alignment Mode > enable Service Mode.

5.6 If you are dinghy towing for an extended period or notice a change in ride height, follow the process below, "Disconnecting the Towed Vehicle" to disconnect the towed vehicle, and restore the vehicle ride height.

6. With the engine running, release the parking brake and verify that the transfer case is in N (Neutral) by shifting the transmission to D (Drive) and then to R (Reverse). There should be no movement while shifting the transmission.
7. Shift the transmission to N (Neutral).
8. Turn the vehicle off, wait five seconds, then shift to P (Park).
9. Turn on the ignition without starting the engine. To do this, take your foot off the brake pedal then press and hold ENGINE START/STOP for five seconds until the green light on the button is illuminated. See *Ignition Positions* ⇨ *204*.

⚠ Warning

To avoid death, serious injury, or property damage, before dinghy towing the vehicle, always disconnect and secure the negative battery cable and cover the negative battery post and cable with a non-conductive material. If the battery is left connected or the battery cable contacts the post, the Electric Parking Brake may activate during towing, which could cause a crash.

Before going on to the next step, take the mechanical key with you, see *Keys* ⇨ *8*. It will be needed to re-enter the vehicle after the power is disconnected.

10. Disconnect the negative (–) battery cable. See *Battery - North America* ⇨ *327*.

Caution

If the steering column is locked, vehicle damage may occur.

11. Move the steering wheel to make sure the steering column is unlocked.
12. Verify the transmission is in P (Park). Failing to put the transmission into P (Park) before flat towing can damage the transmission.
13. Move the vehicle being towed forward and backward three feet using the tow vehicle to make sure the parking brake is not set and transfer case is in N (Neutral).
14. Keep the remote key outside of the vehicle and manually lock the doors. Access the vehicle by using the key in the door lock. See *Keys* ⇨ *8*.

Disconnecting the Towed Vehicle

Before disconnecting the towed vehicle:

1. Park on a level surface.
2. Connect the battery.
3. Apply the brake pedal.

⚠ Warning

The vehicle can roll when the brake pedal is released. Always apply and hold the brake pedal when setting the parking brake. Make sure the parking brake is fully engaged before releasing the brake pedal.

NOT FOR RESALE

4. Start the engine and shift the transfer case out of N (Neutral) to 2↑. See "Shifting out of N (Neutral)" under *Four-Wheel Drive* ➪ *215*. See your dealer if the transfer case cannot be shifted out of N (Neutral).
5. Check that the vehicle is in 2↑ by shifting the transmission to R (Reverse) and then to D (Drive). There should be movement of the vehicle while shifting.
6. If equipped with Air Suspension, from the infotainment app screen select Settings > Vehicle > Suspension and ensure Service Mode is disabled.
7. Shift the transmission to P (Park) and turn off the vehicle.
8. Set the parking brake.
9. Release the parking brake.
10. Disconnect the vehicle from the tow vehicle.
11. Reset any lost presets.

    The outside temperature display will default to 0 °C (32 °F) but will reset with normal usage.

Dolly Towing

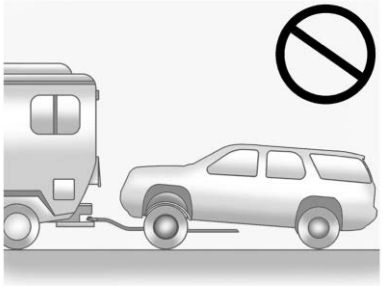

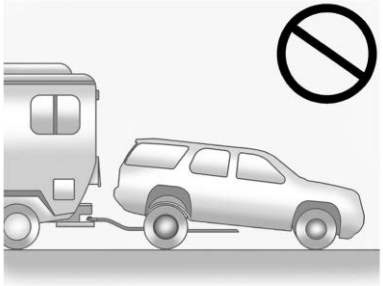

Caution
Do not tow this vehicle with two wheels on the ground, or vehicle damage could occur. This damage would not be covered by the vehicle warranty.

Dolly towing this vehicle is not allowed with either the front or the rear tires on the ground for two-wheel drive or four-wheel drive, regardless of transfer case.

Appearance Care

Exterior Care

Locks

Locks are lubricated at the factory. Only use a de-icing agent when absolutely necessary, and have the locks greased after using the de-icing agent. See *Recommended Fluids and Lubricants* ➪ *400*.

NOT FOR RESALE

Washing the Vehicle

⚠ Warning

Do not power wash any part of the vehicle's interior, including the vinyl floor covering. This could damage safety and other systems in the vehicle, which would not be covered by the vehicle warranty.

Caution

Do not use petroleum-based, acidic, or abrasive cleaning agents as they can damage the vehicle's paint, metal, or plastic parts. If damage occurs, it would not be covered by the vehicle warranty. Approved cleaning products can be obtained from your dealer. Follow all manufacturer directions regarding correct product usage, necessary safety precautions, and appropriate disposal of any vehicle care product.

To preserve the exterior finish, wash it often and out of direct sunlight.

Take care to wash materials such as calcium chloride and other salts, ice melting agents, road oil and tar, tree sap, bird droppings, chemicals from industrial chimneys, etc. from the finish as soon as possible. These materials can damage the finish if they remain on painted surfaces.

Automatic Car Wash

Caution

Some automatic car washes can cause damage to the vehicle, wheels, and ground effects. Some automatic car washes are not recommended, due to lack of clearance for the undercarriage and/or wide rear tires and wheels. Ensure the automatic car wash width is large enough for your vehicle.

Caution

To avoid damage to a matte paint finish, do not use an automatic car wash equipped with brushes or scrubbers. Only use touchless automatic car washes.

When using an automatic car wash, follow the posted instructions carefully.

Before entering the wash:

- Close all windows and sunroof, if equipped.
- Turn off the windshield wipers and rear window wipers, if equipped.
- Remove any accessories that can be damaged or interfere with car wash equipment.
- Close the fuel door.

During the wash:

- If using an automatic car wash with a conveyor system, drive onto the conveyor system, then put the vehicle in N (Neutral).

Hand Wash

Caution

Take care when washing or drying near vehicle emblems to prevent damage. Damage to emblems may not be covered under vehicle warranty.

Thoroughly rinse all cleaning agents before and after hand washing. Agents left to dry on the exterior may stain the finish.

NOT FOR RESALE

Dry the exterior finish with a soft, clean chamois or an all-cotton towel to avoid surface scratches and water spotting.

Cleaning Underhood Components

Caution

Do not power wash any component under the hood that has this symbol.

This could cause damage that would not be covered by the vehicle warranty.

Only use water when cleaning underhood components. Solvents and aggressive cleaners can be harmful.

Caution

Avoid using high-pressure washers closer than 30 cm (12 in) to the surface of the vehicle. Use of power washers exceeding 8,274 kPa (1,200 psi) can result in damage or removal of paint and decals.

If you choose to use a power washer, use care when handling and follow these criteria:

- Keep water pressure below 8,000 kPa (1,160 PSI).
- Keep water temperature below 80 °C (180 °F).
- Use a spray nozzle with a 40-degree-wide or greater angle spray pattern.
- Keep the nozzle at least 30 cm (12 in) away from all surfaces.

Only use water when cleaning underhood components. Solvents and aggressive cleaners can be harmful.

Finish Care

Caution

Do not apply waxes or polishes to uncoated plastic, vinyl, rubber, decals, simulated wood, or matte paint as damage can occur.

Caution

Machine compounding or aggressive polishing on a basecoat/clearcoat paint finish may damage it. Use only non-abrasive waxes and polishes that are made for a basecoat/clearcoat paint finish on the vehicle.

Performing occasional hand waxing or mild polishing removes residue from the paint finish. Do not apply aftermarket clearcoat sealant/wax. See your dealer for approved cleaning products.

Avoid rubbing the finish vigorously. This can create bright spots and an uneven appearance on the finish.

Airborne pollutants can cause blotchy, ring-shaped discolorations, and small, irregular dark spots etched into the paint surface. If painted surfaces are damaged, see your dealer to have the damage assessed and repaired.

To keep paint finish looking new, keep the vehicle garaged or covered whenever possible.

NOT FOR RESALE

Protecting Exterior Bright Metal Moldings

Caution

Failure to clean and protect the bright metal moldings can result in a hazy white finish or pitting. This damage would not be covered by the vehicle warranty.

The bright metal moldings on the vehicle are made of aluminum, chrome, or stainless steel. To prevent damage, always follow these cleaning instructions:

- Be sure the molding is cool to the touch before applying any cleaning solution.
- Use only approved cleaning solutions for aluminum, chrome, or stainless steel. Some cleaners are highly acidic or contain alkaline substances and can damage the moldings.
- Always dilute a concentrated cleaner according to the manufacturer's instructions.
- Do not use cleaners that are not intended for automotive use.
- Use a nonabrasive wax on the vehicle after washing to protect and extend the molding finish.

Cleaning Exterior Lights/Lenses, Emblems, Decals, and Stripes

Caution

Failure to clean lights properly can cause damage to the light cover that would not be covered by the vehicle warranty.

Caution

Using wax on low gloss black finish stripes can increase the gloss level and create a non-uniform finish. Clean low gloss stripes with soap and water only.

Use lukewarm or cold water, a soft cloth, and a car washing soap to clean exterior lights, lenses, emblems, decals, and stripes. Follow the instructions under "Washing the Vehicle" previously in this section.

Light covers are made of plastic and may have a UV protective coating. Do not clean or wipe them while they are dry. This can cause scratches to the surface of the light cover.

Do not use any of the following on light covers:

- Abrasive or caustic agents.
- Washer fluids and other cleaning agents in higher concentrations than suggested by the manufacturer.
- Solvents, alcohols, fuels, or other harsh cleaners.
- Ice scrapers or other hard items.
- Aftermarket appearance caps or covers while the lights are illuminated. Excessive heat may be generated and can damage the covers.

Air Intakes

Clear debris from the air intakes between the hood and windshield when washing the vehicle.

NOT FOR RESALE

Shutter System

This vehicle may have a shutter system that automatically closes the frontal cooling opening. This system is designed to help improve fuel economy. If the shutter system is blocked, the Malfunction Indicator Light may turn on. Ensure the shutter system is clear of any visible debris, snow, or ice. If the Malfunction Indicator Light stays on after cleaning the shutter system, see *Malfunction Indicator Light (Check Engine Light)* ⇨ 122.

Windshield and Wiper Blades

Clean the outside of the windshield with glass cleaner.

Clean rubber wiper blades using a lint-free cloth or paper towel soaked with windshield washer fluid or a mild detergent. Wash the windshield thoroughly when cleaning the blades. Bugs, road grime, sap, and a buildup of vehicle wash/wax treatments may cause wiper streaking.

Extreme dusty conditions, sand, salt, heat, sun, snow, and ice can cause damage. Replace the wiper blades when they are worn or damaged.

Weatherstrips

Apply weatherstrip lubricant once a year to help weatherstrips last longer, seal better, and not stick or squeak. Hot, dry climates may require more frequent application.

Use a clean cloth to remove any black marks caused by weatherstrips.

Tires, Wheels, and Wheel Trim

Caution

Using petroleum-based tire dressing products on the vehicle may damage the paint finish and/or tires. When applying

(Continued)

Caution (Continued)

a tire dressing, always wipe off any overspray from all painted surfaces on the vehicle.

Use a stiff brush with tire cleaner to clean the tires.

Caution

To avoid surface damage on wheels and wheel trim, do not use strong soaps, chemicals, abrasive polishes, cleaners, or brushes. Use only GM approved cleaners. Do not drive the vehicle through an automatic car wash that uses silicon carbide tire/wheel cleaning brushes. Damage could occur and the repairs would not be covered by the vehicle warranty.

Use a soft, clean cloth with mild soap and water to clean the wheels. After rinsing thoroughly with clean water, dry with a soft, clean towel. Wax as desired.

NOT FOR RESALE

Body Component Lubrication

Lubricate all key lock cylinders, hood hinges, liftgate/liftglass hinges, and the steel fuel door hinge unless the components are plastic. See *Recommended Fluids and Lubricants* ⇨ *400*.

Underbody Maintenance

Caution
For electric or hybrid vehicles, perform regular care around the high voltage system. Do not direct high pressure spray at or around connectors, cables, or any of the vents. High pressure can damage the seals and battery components.

Every six months, flush any corrosive materials from the underbody with plain water. Take care to thoroughly clean any areas where mud and other debris can collect. If equipped, extend power assist steps and use a high pressure wash to clean all joints and gaps.

Do not directly power wash the transfer case and/or front/rear axle output seals. High pressure water get into the seals and contaminate the fluid. Contaminated fluid decreases the life of the transfer case and/or axles and should be replaced.

Sheet Metal Damage

If the vehicle is damaged and requires sheet metal repair or replacement, use original manufacturer replacement parts which provide corrosion protection and maintain the vehicle warranty.

If original manufacturer replacement parts are not used, make sure the body repair shop applies anti-corrosion material to parts repaired or replaced.

Finish Damage

Quickly repair minor chips and scratches with touch-up materials available from your dealer to avoid corrosion. See your dealer's body and paint shop to correct larger areas of finish damage.

Interior Care

To prevent dirt particle abrasions to the interior, regularly clean it. Before using cleaners, read and follow all safety instructions on the label. While cleaning the interior, open the doors and windows for proper ventilation. Newspapers or dark garments can transfer color to the interior.

Caution
Immediately remove cleaners, hand lotions, sunscreen, and insect repellent from all interior surfaces or permanent damage may result.

Caution
Use cleaners specifically designed for the surfaces being cleaned to prevent permanent damage to the vehicle. Apply all cleaners directly to a cleaning cloth. Do not spray cleaners on any switches or controls.

When using liquid soap cleaners, follow the directions on the specific cleaner or soap solution for dilution instructions.

Caution
To prevent damage:

(Continued)

NOT FOR RESALE

Caution (Continued)

- Never use a razor or any other sharp object to remove soil from any interior surface.
- Never use a brush with stiff bristles.
- Never rub any surface aggressively or with too much pressure.
- Do not get any exposed electrical components wet.
- Do not use laundry detergents or dishwashing soaps with degreasers. Do not use solutions that contain strong or caustic soap.
- Do not heavily saturate the upholstery when cleaning.
- Do not use solvents or cleaners containing solvents.
- Do not use disinfecting wipes that are scented or contain bleach. Do not use wipes or cleaners that show a color transfer to the wipe or change the appearance of the interior surface when used.

(Continued)

Caution (Continued)

- Do not use scented or gel-type hand sanitizers. If hand sanitizer comes in contact with interior surfaces of the vehicle, blot immediately and clean with a soft cloth dampened with a mild soap and water solution.

Interior Glass

Caution

To prevent scratching, never use abrasive cleaners on automotive glass. Abrasive cleaners or aggressive cleaning may damage the rear window defogger.

Use a microfiber cloth fabric dampened with water to clean interior glass. Wipe droplets left behind with a clean dry cloth. If necessary, use a commercial glass cleaner after cleaning with plain water.

Cleaning the interior windshield with water during the first three to six months of ownership will reduce tendency to fog.

Head-Up Display (HUD)

Clean the inside of the windshield to remove any dirt or film that could reduce the sharpness or clarity of the Head-Up Display (HUD) image.

Clean the Head-Up Display (HUD) lens with a soft cloth sprayed with glass cleaner. Wipe the lens gently, then dry it. See *Head-Up Display (HUD)* ➪ *137*.

Speaker Covers

Vacuum gently around speaker covers to prevent damage. Clean spots with water and mild soap.

Coated Moldings

When cleaning coated moldings:

- When lightly soiled, wipe with a sponge or soft, lint-free cloth dampened with water.
- When heavily soiled, use warm soapy water.

NOT FOR RESALE

Vinyl/Rubber Floor and Mats

⚠ Warning

Do not use cleaners that contain silicone, wax-based products, or cleaners that increase gloss on vinyl/rubber floor and mats. These cleaners can permanently change the appearance and feel of the vinyl/rubber and can make the floor slippery. Your foot could slip while operating the vehicle, and you could lose control, resulting in a crash. You or others could be injured.

If equipped with vinyl/rubber floor and mats, use a soft cloth and/or brush dampened with water to remove dust and loose dirt. For more thorough cleaning, use a mild soap and water solution.

Fabric/Carpet/Suede

Before cleaning, remove as much solid soils as possible, then gently vacuum the surface using a soft brush attachment. If a rotating vacuum brush attachment is used, only use it on the floor carpet.

Gently blot liquids with a paper towel. Continue blotting until no more soil can be removed.

To clean:

1. Saturate a clean, lint-free colorfast cloth with water. Microfiber cloth is recommended to prevent lint transfer to the fabric or carpet.
2. Remove excess moisture by gently wringing until water does not drip from the cleaning cloth.
3. Start on the outside edge of the soil and gently rub toward the center. Fold the cleaning cloth to a clean area frequently to prevent forcing the soil into the fabric.
4. Continue gently rubbing the soiled area until there is no longer any color transfer from the soil to the cleaning cloth.
5. If the soil is not completely removed, use a mild soap solution followed only by plain water.
6. After cleaning, use a paper towel to blot excess moisture.

Stubborn stains may require a commercial upholstery cleaner or spot lifter. Test a small hidden area for colorfastness before using a commercial upholstery cleaner or spot lifter. If ring formation occurs, clean the entire fabric or carpet.

Cleaning High Gloss Surfaces, Vehicle Information, and Radio Displays

Caution

Do not attach a device with a suction cup to the display. This may cause damage and would not be covered by the vehicle warranty.

1. Use a soft bristle brush to remove any dirt from the high gloss surface/display.
2. Gently clean the surface/display with a clean microfiber cloth that has not been bleached or washed with fabric softener. Never use window cleaners or solvents. Rinse the microfiber cloth thoroughly and air dry before next use.

NOT FOR RESALE

Instrument Panel, Leather, Vinyl, Plastic Surfaces, Low Gloss Paint Surfaces, and Natural Open Pore Wood Surfaces

Caution

Soaking or saturating leather, especially perforated leather, as well as other interior surfaces, may cause permanent damage. Wipe excess moisture from these surfaces after cleaning and allow them to dry naturally. Never use heat, steam, or spot removers. Do not use liquids that contain alcohol or solvents on leather seats. Do not use cleaners that contain silicone or wax-based products. Cleaners containing these solvents can permanently change the appearance and feel of leather or soft trim and are not recommended.

Caution

Use of air fresheners may cause permanent damage to plastics and painted surfaces. If an air freshener comes in contact with any plastic or painted surface in the vehicle,

(Continued)

Caution (Continued)

blot immediately and clean with a soft cloth dampened with a mild soap solution. Damage caused by air fresheners would not be covered by the vehicle warranty.

Use compressed air or a vacuum to remove liquid or dust under the Multi-Functional Controller cap, if equipped.

To remove dust and dirt from knobs and crevices on the instrument cluster:

1. Use a soft bristle brush.
2. Wipe with a soft microfiber cloth dampened with water. Use a mild soap and water solution for more thorough cleaning.

Do not use cleaners that increase gloss, especially on the instrument panel. Reflected glare can decrease visibility through the windshield under certain conditions.

Cargo Cover and Convenience Net

If equipped, wash with warm water and mild detergent. Do not use chlorine bleach. Rinse with cold water, and then dry completely.

Care of Seat Belts

⚠ Warning

Do not bleach or dye seat belt webbing. It may severely weaken the webbing. In a crash, they might not be able to provide adequate protection. Clean and rinse seat belt webbing only with mild soap and lukewarm water. Allow the webbing to dry.

Keep belts clean and dry.

Floor Mats

⚠ Warning

If a floor mat is the wrong size or is not properly installed, it can interfere with the pedals. Interference with the pedals can cause unintended acceleration and/or increased stopping distance which can cause a crash and injury. Make sure the floor mat does not interfere with the pedals.

Proper Use:

- Use only GM-certified floor mats.

(Continued)

NOT FOR RESALE

Warning (Continued)

- Do not use a floor mat if the vehicle is not equipped with a floor mat retainer on the driver side floor.
- Use the floor mat with the correct side up. Do not turn it over.
- Do not place anything on top of the driver side floor mat.
- Use only a single floor mat on the driver side.

The original equipment floor mats are specially designed for your vehicle. If the floor mats need replacing, see "Removing and Replacing the Floor Mats" later in this section.

Removing and Replacing the Floor Mats

The driver side floor mat is held in place by two button-type carpet retainers.

1. Pull up on the rear of the floor mat to unlock each retainer and remove.
2. Reinstall by lining up the floor mat retainer openings over the button-type carpet retainers and snapping them into position.
3. Make sure the floor mat is properly secured in place. Verify the floor mat does not interfere with the pedals.

Cleaning Rubber Floor Mats (All-Weather Mats and Floor Liners)

See "Vinyl/Rubber Floor and Mats" under *Interior Care* ➪ *389* for important cleaning information.

NOT FOR RESALE

Service and Maintenance

General Information
General Information 394
Maintenance Schedule
Maintenance Schedule 395
Multi-Point Vehicle Inspection (MPVI)
Multi-Point Vehicle Inspection (MPVI) 398
Special Application Services
Special Application Services 399
Recommended Fluids, Lubricants, and Parts
Recommended Fluids and Lubricants 400
Maintenance Records
Maintenance Records 401

General Information

Your vehicle is an important investment. This section describes the required maintenance for the vehicle. Follow this schedule to help protect against major repair expenses resulting from neglect or inadequate maintenance. It may also help to maintain the value of the vehicle if it is sold. It is the responsibility of the owner to have all required maintenance performed.

Your dealer has trained technicians who can perform required maintenance using genuine replacement parts. They have up-to-date tools and equipment for fast and accurate diagnostics. Many dealers have extended evening and Saturday hours, courtesy transportation, and online scheduling to assist with service needs.

Your dealer recognizes the importance of providing competitively priced maintenance and repair services. With trained technicians, the dealer is the place for routine maintenance such as oil changes and tire rotations and additional maintenance items like tires, brakes, batteries, and wiper blades.

Caution

Damage caused by improper maintenance can lead to costly repairs and may not be covered by the vehicle warranty. Maintenance intervals, checks, inspections, recommended fluids, and lubricants are important to keep the vehicle in good working condition.

Do not have chemical flushes that are not approved by GM performed on the vehicle. The use of flushes, solvents, cleaners, or lubricants that are not approved by GM could damage the vehicle, requiring expensive repairs that are not covered by the vehicle warranty.

The Tire Rotation and Required Services are the responsibility of the vehicle owner. It is recommended to have your dealer perform these services every 12 000 km/7,500 mi. Proper vehicle maintenance helps to keep the vehicle in good working condition, improves fuel economy, and reduces vehicle emissions.

NOT FOR RESALE

Because of the way people use vehicles, maintenance needs vary. There may need to be more frequent checks and services. The Additional Required Services - Normal are for vehicles that:

- Carry passengers and cargo within recommended limits on the Tire and Loading Information label. See *Vehicle Load Limits* ➪ *200*.
- Are driven on reasonable road surfaces within legal driving limits.
- Use the recommended fuel. See *Recommended Fuel* ➪ *304*.

Refer to the information in the Maintenance Schedule Additional Required Services - Normal Service.

The Additional Required Services - Severe are for vehicles that are:

- Mainly driven in heavy city traffic in hot weather.
- Mainly driven in hilly or mountainous terrain.
- Frequently towing a trailer.
- Used for high speed or competitive driving.
- Used for taxi, police, or delivery service.

Refer to the information in the Maintenance Schedule Additional Required Services - Severe Service.

⚠ Warning

Performing maintenance work can be dangerous and can cause serious injury. Perform maintenance work only if the required information, proper tools, and equipment are available. If they are not, see your dealer to have a trained technician do the work. See *Doing Your Own Service Work* ➪ *309*.

Maintenance Schedule

Tire Rotation and Required Services Every 12 000 km (7,500 mi)

Tires are rotated to achieve a more uniform wear for all tires. The first rotation is the most important.

Anytime unusual wear is noticed, rotate the tires as soon as possible, check for proper tire inflation pressure, and check for damaged tires or wheels. If the unusual wear continues after the rotation, check the wheel alignment. See *When It Is Time for New Tires* ➪ *359* and *Wheel Replacement* ➪ *362*.

- Perform Multi-Point Vehicle Inspection. See *Multi-Point Vehicle Inspection (MPVI)* ➪ *398*.
- Lubricate body components. See *Exterior Care* ➪ *384*.

Extended Idle Use

When the vehicle is used in a way that requires extended idle time, one hour of use shall be deemed the same as 53 km (33 mi). See *Driver Information Center (DIC)* ➪ *132* for hourmeter.

NOT FOR RESALE

Additional Required Services — Normal Service

Every 12 000 km (7,500 mi)

- Check engine oil level and oil life percentage. If needed, change engine oil and filter, and reset oil life system. Or when the CHANGE ENGINE OIL SOON message displays, have the engine oil and filter changed within the next 1 000 km/600 mi. If driven under the best conditions, the engine oil life system may not indicate the need for vehicle service for up to a year. The engine oil and filter must be changed at least once a year and the oil life system must be reset. Your trained dealer technician can perform this work. If the engine oil life system is reset accidentally, service the vehicle within 5 000 km/3,000 mi since the last service. Reset the oil life system when the oil is changed. See *Engine Oil Life System* ⇨ *317*.
- When the REPLACE AT NEXT OIL CHANGE message displays, the engine air filter should be replaced at the next engine oil change. When the REPLACE ENGINE AIR FILTER SOON message displays, the engine air filter should be replaced at the earliest convenience. Reset the engine air filter life system after the engine air filter is replaced. See *Engine Air Filter Life System* ⇨ *318*.

Every 36 000 km (22,500 mi)

- Replace passenger compartment air filter. Or every 24 months, whichever comes first. More frequent passenger compartment air filter replacement may be needed if driving in areas with heavy traffic, poor air quality, high dust levels, or environmental allergens. Passenger compartment air filter replacement may also be needed if there is reduced airflow, window fogging, or odors. Your GM dealer can help determine when to replace the filter.

Every 80 500 km (50,000 mi)

- Change transfer case fluid (V-Series Only). Do not directly power wash the transfer case and/or front/rear axle output seals. High pressure water can overcome the seals and contaminate the transfer case fluid. Contaminated fluid will decrease the life of the transfer case and/or axles and should be replaced.

Every 96 000 km (60,000 mi)

- Replace spark plugs. Inspect spark plug wires and/or boots. 6.2L LT4 Supercharged Engine.

Every 156 000 km (97,500 mi)

- Replace spark plugs. Inspect spark plug wires and/or boots. 6.2L L87 Engine.
- Change transfer case fluid, if equipped with 4WD (Except V-Series). Do not directly power wash the transfer case and/or front/rear axle output seals. High pressure water can overcome the seals and contaminate the transfer case fluid. Contaminated fluid will decrease the life of the transfer case and/or axles and should be replaced.

Every 161 000 km (100,000 mi)

- Replace hood and/or body lift support gas struts. Or every 10 years, whichever comes first. See *Gas Strut(s)* ⇨ *331*.

Every 240 000 km (150,000 mi)

- Drain and fill engine cooling system. Or every six years, whichever comes first. See *Cooling System* ⇨ *320*.

NOT FOR RESALE

Severe Conditions Requiring More Frequent Maintenance*

- Public service, military, or commercial use vehicles to include the following:
  - Ambulances, police cars, and emergency rescue vehicles.
  - Civilian vehicles such as light duty pick-up trucks, SUVs, and passenger cars that are used in military applications.
  - Recovery vehicles such as tow trucks and flatbed single vehicle carriers or any vehicle that is consistently used in towing trailers or other loads.
  - High use commercial vehicles such as courier delivery vehicles, private security patrol vehicles, or any vehicles that operate on a 24–hour basis.
  - Any vehicle consistently operated in a high sand or dust environment such as those used on oil pipelines and similar applications.
- Vehicles that are regularly used for short trips of 6 km (4 mi) or less.

The oil life indicator will show you when to change the oil and filter. Under severe conditions the indicator may come on before 12 000 km (7,500 mi).

* Footnote: Under extreme driving conditions listed above, it may be necessary to replace your spark plugs at more frequent intervals. For further assistance in determining the most suitable service maintenance intervals for your vehicle, please contact your authorized GM Dealer.

Extreme service is for vehicles mainly driven off-road in four-wheel drive or used in farming, mining, forestry, or snow plowing.

Additional Required Services — Severe Service

Every 40 000 km (25,000 mi)

- Change transfer case fluid (V-Series Only). Do not directly power wash the transfer case and/or front/rear axle output seals. High pressure water can overcome the seals and contaminate the transfer case fluid. Contaminated fluid will decrease the life of the transfer case and/or axles and should be replaced.

Every 72 000 km (45,000 mi)

- Change automatic transmission fluid and filter.
- Change transfer case fluid, if equipped with 4WD (Except V-Series). Do not directly power wash the transfer case and/or front/rear axle output seals. High pressure water can overcome the seals and contaminate the transfer case fluid. Contaminated fluid will decrease the life of the transfer case and/or axles and should be replaced.

Owner Checks and Services

Every Five Years

- Replace brake fluid.

Every Seven Years

- Replace Air Conditioning Desiccant every seven years. The air conditioning system requires maintenance every seven years. This service requires replacement of the desiccant to help the longevity and efficient operation of the air conditioning system. This service can be complex. See your dealer.

NOT FOR RESALE

Multi-Point Vehicle Inspection (MPVI)

A Multi Point Vehicle Inspection completed by a trained technician is a maintenance assessment of your vehicle. The benefit of the Multi Point Vehicle Inspection is to identify service items that require immediate attention and those that may require attention in the future.

The technician will perform the following checks on your vehicle. You can obtain a copy of the appropriate Multi Point Vehicle Inspection checklist on your country's GM Certified Service website. For a complete list of checks, inspections, and services, see your dealer.

Some items may not apply to your vehicle and/or region.

Diagnostics

- OnStar active, if equipped
- Service history/recall check

Engine Oil and Filter

- Engine oil
- Oil life monitor
  - Reset oil life monitor

Exterior Lights

- Visual inspection

Windshield and Wipers

- Visual inspection

12 Volt Battery

- Battery visual inspection
- Battery test results
- Battery cables and connections

Systems, Fluids, and Visible Leak Inspection

- Engine oil
- Transmission
- Drive axle
- Transfer case
- Engine cooling system
- Power steering, if equipped
- Fuel system
- Windshield washer fluid

Tire Inspection

- Tire pressure, tread depth, and wear
- Rotation, if applicable
- Alignment check, optional
- Reset tire pressure monitor
- Check tire sealant expiration date, if equipped
- Check spare tire, if equipped

Brakes

- Check brake system

Visible and Functional Inspections

- Seat belt components
- Exhaust system
- Accelerator pedal
- Passenger compartment air filter, if equipped
- Engine air filter
- Hoses
- Belts
- Shocks and struts
- Steering components

NOT FOR RESALE

- Axle boots or driveshaft and u-joints
- Compartment lift struts, if equipped
- Floor mats secured, no interference with pedals
- Horn
- Ignition lock, if equipped
- Starter switch
- Evaporative control system

Lubricate

- Chassis components

Special Application Services

- Severe Commercial Use Vehicles Only: Lubricate chassis components every oil change.
- Have underbody flushing service performed. See "Underbody Maintenance" in *Exterior Care* ⇨ *384*.

NOT FOR RESALE

Recommended Fluids, Lubricants, and Parts

Recommended Fluids and Lubricants

Fluids and lubricants identified below by name or specification, including fluids or lubricants not listed here, can be obtained from your dealer.

Usage	Fluid/Lubricant
Automatic Transmission	DEXRON ULV Automatic Transmission Fluid.
Chassis Lubrication	Lubricant meeting requirements of NLGI #2, Category LB or GC-LB.
Engine Coolant	50/50 mixture of clean, drinkable water and use only DEX-COOL Coolant. See *Cooling System* ➪ *320*.
Engine Oil	Engine oil meeting the dexos1 specification of the proper SAE viscosity grade. ACDelco dexos1 full synthetic is recommended. See *Engine Oil* ➪ *315*.
Front Axle (4WD Only) and Rear Axle.	See your dealer.
Hydraulic Brake System	DOT 4 Hydraulic Brake Fluid.
Key Lock Cylinders, Hood Hinges, Body Door Hinge Pins, Power Assist Steps, Liftgate Hinge, and Fuel Door Hinge	Multi-Purpose Lubricant, Superlube. See your dealer.
Transfer Case (4WD Only)	See your dealer.
Weatherstrip Conditioning	Weatherstrip lubricant. See your dealer.
Windshield Washer	Automotive windshield washer fluid that meets regional freeze protection requirements.

NOT FOR RESALE

Maintenance Records

After scheduled services are performed, record the date, odometer reading, who performed the service, and the type of services performed in the boxes provided. Retain all maintenance receipts.

Date	Odometer Reading	Serviced By	Maintenance Stamp	Services Performed

NOT FOR RESALE

Technical Data

Vehicle Identification
Vehicle Identification Number (VIN) 402
Service Parts Identification 402
Vehicle Data
Capacities and Specifications 403
Engine Drive Belt Routing 405

Vehicle Identification

Vehicle Identification Number (VIN)

This legal identifier is in the front corner of the instrument panel, on the driver side of the vehicle. It can be seen through the windshield from outside. The Vehicle Identification Number (VIN) also appears on the Vehicle Certification label and certificates of title and registration.

Engine Identification

The eighth character in the Vehicle Identification Number (VIN) is the engine code. This code identifies the vehicle engine, specifications, and replacement parts. See "Engine Specifications" under *Capacities and Specifications* ➪ *403* for the vehicle engine code.

Service Parts Identification

The certification label provides vehicle service information to the service technician.

There may be a large barcode on the certification label on the door frame that the service technician can scan for the following information:

- Vehicle Identification Number (VIN)
- Model designation
- Paint information
- Production options

If there is not a large barcode on this label, the same information can be found on a label inside the glove box.

NOT FOR RESALE

Vehicle Data

Capacities and Specifications

The following approximate capacities are given in metric and English conversions. See *Recommended Fluids and Lubricants* ➪ *400*.

Application	Capacities	
	Metric	English
Air Conditioning Refrigerant	For the air conditioning system refrigerant type and charge amount, see the refrigerant label under the hood. See your dealer for more information.	
Cooling System*		
6.2L (L87)	14.3 L	15.1 qt
6.2L (LT4 Supercharged Engine) Engine Cooling System	14.6 L	15.4 qt
6.2L (LT4 Supercharged Engine) Low Temperature Coolant System	5.3 L	5.6 qt
Engine Oil with Filter	7.6 L	8.0 qt
Fuel Tank		
Short Wheelbase	90.8 L	24.0 gal
Long Wheelbase	106.0 L	28.0 gal
Transfer Case Fluid	1.5 L	1.6 qt

NOT FOR RESALE

Application	Capacities	
	Metric	English
Wheel Nut Torque	190 N•m	140 lb ft
All capacities are approximate. When adding, be sure to fill to the approximate level, as recommended in this manual. Recheck fluid level after filling.		
*Engine cooling system capacity values are based on the entire cooling system and its components.		

Engine Specifications

Engine	VIN Code	Spark Plug Gap
6.2L V8 Engine (L87)	L	0.95–1.10 mm (0.037–0.043 in)
6.2L V8 Supercharged Engine (LT4)	9	0.725–0.875 mm (0.028–0.034 in)
Spark plug gaps are preset by the manufacturer. Re-gapping the spark plug is not recommended and can damage the spark plug.		

NOT FOR RESALE

Engine Drive Belt Routing

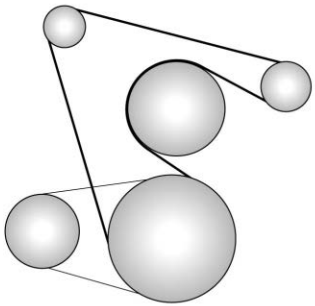

6.2L Engine (L87)

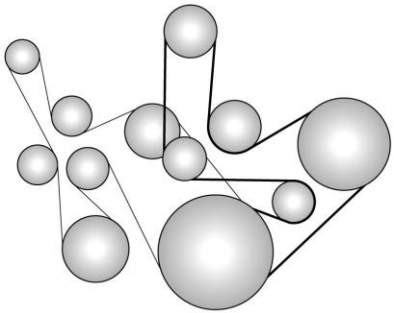

6.2L Supercharged Engine (LT4)

NOT FOR RESALE

Customer Information

Customer Information
Customer Satisfaction Procedure 406
California Warranty Information 408
Customer Assistance Offices 410
Customer Assistance for Text Telephone (TTY) Users 410
Online Account and Customer Support ...410
GM Mobility Reimbursement Program (U.S. Only) 411
Roadside Assistance Program 411
Scheduling Service Appointments 413
Courtesy Transportation Program 413
If a Crash Occurs 414
Collision Damage Repair 414
Publication Ordering Information 415
Radio Frequency Statement 416
Disclosures (New Mexico) 416

Reporting Safety Defects
Reporting Safety Defects to the United States Government 416
Reporting Safety Defects to the Canadian Government 417
Reporting Safety Defects to General Motors 417

Vehicle Data Recording and Privacy
Vehicle Data Recording and Privacy 417
Cybersecurity 417
Event Data Recorders 418
OnStar 418
Infotainment System 419

Customer Satisfaction Procedure

Your satisfaction and goodwill are important to your dealer and to Cadillac. Normally, any concerns with the sales transaction or the operation of the vehicle will be resolved by your dealer's sales or service departments. Sometimes, however, despite the best intentions of all concerned, misunderstandings can occur. If your concern has not been resolved to your satisfaction, the following steps should be taken:

STEP ONE: Discuss your concern with a member of dealership management. Normally, concerns can be quickly resolved at that level. If the matter has already been reviewed with the sales, service or parts manager, contact the owner of your dealership or the general manager

STEP TWO: If after contacting a member of dealership management, it appears your concern cannot be resolved by your dealership without further help, in the U.S., call the Cadillac Customer Assistance Center at 1-800–333–4223. In Canada, call the Canadian Cadillac Customer Care Centre at 1-888-446-2000.

NOT FOR RESALE

We encourage you to call the toll-free number in order to give your inquiry prompt attention. Have the following information available to give the Customer Assistance representative:

- Vehicle Identification Number (VIN). This is available from the vehicle registration or title, or the plate at the top left of the instrument panel and visible through the windshield.
- Dealership name and location.
- Vehicle delivery date and present mileage.

When contacting Cadillac, remember that your concern will likely be resolved at a dealer's facility. That is why we suggest following Step One first.

STEP THREE — U.S. Owners: Both GM and your GM dealer are committed to making sure you are completely satisfied with your new vehicle. However, if you continue to remain unsatisfied after following the procedure outlined in Steps One and Two, you can file with the Better Business Bureau (BBB) AUTO LINE Program to enforce any additional rights you may have.

The BBB AUTO LINE Program is an out-of-court program administered by BBB National Programs, Inc. to settle automotive disputes regarding vehicle repairs or the interpretation of the New Vehicle Limited Warranty. Although you may be required to resort to this informal dispute resolution program prior to filing a court action, use of the program is free of charge and your case will generally be heard within 40 days. If you do not agree with the decision given in your case, you may reject it and proceed with any other venue for relief available to you. When contacting the BBB AUTO LINE, you will need to provide the following information: Owner's name and address, Vehicle identification number (VIN), the Year, Make, Model, mileage of the vehicle and provide a description of the concern.

Contact the BBB AUTO LINE Program using the toll-free telephone number or write them at the following address:

BBB AUTO LINE Program
BBB National Programs, Inc.
1676 International Drive
Suite 550
McLean, VA 22102

Telephone: 1-800-955-5100
www.bbbautoline.org

This program is available in all 50 states and the District of Columbia. Eligibility is limited by vehicle age, mileage, and other factors. General Motors reserves the right to change eligibility limitations and/or discontinue its participation in this program.

STEP THREE — Canadian Owners: In the event that you do not feel your concerns have been addressed after following the procedure outlined in Steps One and Two, General Motors of Canada Company wants you to be aware of its participation in a no-charge mediation/arbitration program. General Motors of Canada Company has committed to binding arbitration of owner disputes involving factory-related vehicle service claims. The program provides for the review of the facts involved by an impartial third party arbiter, and may include an informal hearing before the arbiter. The program is designed so that the entire dispute settlement process, from the time you file your complaint to the final decision, should be completed in about 70 days. We believe our impartial program offers advantages over courts in most jurisdictions because it is informal, quick, and free of charge.

For further information concerning eligibility in the Canadian Motor Vehicle Arbitration Plan (CAMVAP), call toll-free 1-800-207-0685, or call the Cadillac Customer Care Centre, 1-888-446-2000, or write to:

NOT FOR RESALE

General Motors Cadillac Customer Care Centre

General Motors of Canada Company
500 Wentworth Street W
Oshawa, ON L1J 0C5

Your inquiry should be accompanied by the Vehicle Identification Number (VIN).

California Warranty Information

The Song-Beverly Consumer Warranty Act provides consumers who purchase or lease a new motor vehicle in California with certain rights if their vehicle has nonconformities that GM or its authorized repair facilities (e.g., GM dealers) are unable to repair after a reasonable number of attempts.

Applied to your vehicle, California Civil Code Section 1793.2(d) requires that, if GM or its authorized repair facilities are unable to repair a new motor vehicle to conform to the vehicle's applicable express warranties after a reasonable number of attempts, GM shall either replace the new motor vehicle or provide restitution in accordance with a statutory formula.

California Civil Code Section 1793.22(b) creates a presumption that GM has had a reasonable number of attempts to conform the vehicle to its applicable express warranties if, within 18 months from delivery to the buyer or 18,000 miles on the vehicle's odometer, whichever occurs first, one or more of the following occurs:

- The same nonconformity results in a condition that is likely to cause death or serious bodily injury if the vehicle is driven AND the nonconformity has been subject to repair two or more times by GM or its authorized repair facilities (e.g., dealers) AND the buyer or lessee has at least once directly notified GM of the need for the repair of the nonconformity by mailing such notification to the address listed below.
- The same nonconformity has been subject to repair four or more times by GM or its authorized repair facilities AND the buyer has at least once directly notified GM of the need for the repair of the nonconformity by mailing such notification to the address listed below.
- The vehicle is out of service by reason of repair nonconformities by GM or its authorized repair facilities for a cumulative total of more than 30 calendar days after delivery of the vehicle to the buyer.

If you purchased or leased a new motor vehicle in California and GM or its authorized repair facilities have been unable to repair the vehicle to conform it to applicable express warranties within a reasonable number of attempts, you may be eligible for relief under the Song-Beverly Consumer Warranty Act. You can submit a claim with the BBB AUTO LINE Program (see *Customer Satisfaction Procedure* ⇨ *406*) or you can request in writing that GM replace or repurchase your vehicle.

Notice to General Motors regarding warranty issues must be sent either by email to californiawarrantynotice@gm.com or by certified or registered mail, return receipt requested, to the following address:

California Repurchase Notice
P.O. Box 33173
Detroit, MI 48232-5173

Any repurchase request must include your name, the accurate Vehicle Identification Number (“VIN”) of your vehicle, a brief summary of the repair history and problems with the vehicle.

NOT FOR RESALE

Información de garantía de California

La Ley de Garantía del Consumidor Song-Beverly brinda a los consumidores que compran o alquilan un vehículo automotor nuevo en California ciertos derechos si su vehículo presenta inconformidades que GM o sus talleres de reparación autorizadas (por ejemplo, los distribuidores de GM) no pueden reparar después de una cantidad razonable de intentos.

Aplicado a su vehículo, la Sección 1793.2(d) del Código Civil de California requiere que, si GM o sus talleres de reparación autorizadas no pueden reparar un vehículo automotor nuevo para cumplir con las garantías expresas aplicables del vehículo después de una cantidad razonable de intentos, GM deberá reemplazar el vehículo automotor nuevo o proporcionar una restitución de acuerdo con una fórmula legal.

La Sección 1793.22(b) del Código Civil de California crea una presunción de que GM ha realizado un número razonable de intentos para adaptar el vehículo a sus garantías expresas aplicables si, dentro de los 18 meses desde la entrega al comprador o 18,000 millas en el odómetro del vehículo, lo que ocurra primero, ocurre uno o más de los siguientes:

- La misma inconformidad da como resultado una condición que probablemente cause la muerte o lesiones corporales graves si se conduce el vehículo Y la inconformidad ha sido objeto de reparación dos o más veces por GM o sus talleres de reparación autorizadas (por ejemplo, distribuidores) Y el comprador o arrendatario ha notificado directamente por lo menos una vez a GM sobre la necesidad de reparar la inconformidad enviando dicha notificación por correo a la dirección que se indica a continuación.
- La misma inconformidad ha sido objeto de reparación cuatro o más veces por GM o sus talleres de reparación autorizadas Y el comprador ha notificado directamente por lo menos una vez a GM sobre la necesidad de la reparación de la inconformidad enviando dicha notificación a la dirección que se indica a continuación.
- El vehículo está fuera de servicio debido a inconformidades de reparación por parte de GM o sus talleres de reparación autorizadas por un total acumulado de más de 30 días calendario después de la entrega del vehículo al comprador.

Si compró o alquiló un vehículo automotor nuevo en California y GM o sus talleres de reparación autorizados no han podido reparar el vehículo para cumplir con las garantías expresas aplicables dentro de una cantidad razonable de intentos, puede ser elegible para recibir ayuda bajo la Ley de Garantía del Consumidor Song-Beverly. Puede presentar un reclamo ante el Programa BBB AUTO LINE (consulte el Procedimiento de satisfacción del cliente) o puede solicitar por escrito que GM reemplace o recompre su vehículo.

El aviso a General Motors sobre problemas de garantía debe enviarse por correo electrónico a californiawarrantynotice@gm.com o por correo certificado o registrado, con acuse de recibo solicitado, a la siguiente dirección:

Aviso de recompra de California
P.O. Box 33173
Detroit, MI 48232-5173

La solicitud para reemplazo o recompra debe incluir su nombre, el Número de identificación del vehículo ("NIV") preciso de su vehículo, un breve resumen del historial de reparación y problemas con el vehículo.

NOT FOR RESALE

Customer Assistance Offices

Cadillac is committed to assisting customers. Visit us online at www.cadillac.com/support (U.S.) or www.cadillaccanada.ca/en/owners (Canada) to chat with us or find answers to commonly asked questions, tips, vehicle how-to instructions, and available support services.

Need more help? Use the telephone numbers or mailing addresses below for additional assistance.

United States and Puerto Rico

Cadillac Customer Assistance Center
Cadillac Motor Car Division
P.O. Box 33169
Detroit, MI 48232-5169

1-800-333-4223

TTY: Dial 711 relay service and contact 1-800-833-2438

Roadside Assistance: 1-800-224-1400

Canada

Cadillac Customer Care Centre
General Motors of Canada Company
500 Wentworth Street W
Oshawa, ON L1J 0C5

1-888-446-2000 (English/French)

Cadillac Roadside Assistance: 1-800-882-1112

Overseas

Contact the local General Motors Business Unit.

Customer Assistance for Text Telephone (TTY) Users

To assist customers who are deaf, hard of hearing, or speech-impaired and/or who use Text Telephones (TTYs), please dial the national 711 relay service and contact 1-800-833-2438. TTY users in Canada can dial 1-800-263-3830.

Online Account and Customer Support

Create a Cadillac Account (U.S.) at cadillac.com

Learn more about your vehicle features, shop for and manage your connected services and OnStar plans, and access diagnostic information specific to your vehicle. Visit cadillac.com and create an account today.

Membership Benefits

: Download owner's manuals and view vehicle-specific how-to videos.

: View maintenance schedules, alerts, and Vehicle Diagnostic Information. Schedule service appointments.

: View service records from your dealership and add your own.

: Select a dealer and view locations, maps, phone numbers, and hours.

: Track your vehicle warranty information.

: View active recalls or search by Vehicle Identification Number. See *Vehicle Identification Number (VIN)* ⇨ *402*.

: Manage your profile and payment information. View your GM Rewards Card earnings and My Cadillac Rewards points.

: Chat with online help representatives.

Cadillac Account (Canada)

Visit your Cadillac Account at cadillaccanada.ca/en (English) or cadillaccanada.ca/fr (French) to access similar benefits.

NOT FOR RESALE

GM Mobility Reimbursement Program (U.S. Only)

GENERAL MOTORS MOBILITY

This program is available to qualified applicants for cost reimbursement, up to certain limits, of eligible aftermarket adaptive equipment required for the vehicle, such as hand controls or a wheelchair/scooter lift for the vehicle.

To learn about the GM Mobility program, call the GM Mobility Assistance Center at 1-800-323-9935. Text Telephone (TTY) users, please dial the national 711 relay service and contact 1-800-323-9935.

Roadside Assistance Program

From the U.S., call 1-800-224-1400. Text Telephone (TTY) Users (U.S. Only): Contact 711 relay service and provide 1-800-224-1400.

From Canada, 1-800-882-1112.

Service is available 24 hours a day, 365 days a year.

Calling for Assistance

When calling Roadside Assistance, have the following information ready:

- Your name, home address, and home telephone number
- Your mobile telephone number or the telephone number of your current location
- Location of the vehicle
- Model, year, color, and license plate number of the vehicle
- Odometer reading and Vehicle Identification Number (VIN)
- Description of the problem

Coverage

Vehicles with an active Powertrain Warranty receive service.

In the U.S. and Canada, Roadside coverage applies only when the person operating the vehicle has the owner's permission to drive it.

Roadside Assistance is available for vehicles within the applicable Powertrain Limited Warranty coverage period or the Electric Vehicle/Hybrid Vehicle Propulsion coverage period. General Motors North America and Cadillac can make any changes or discontinue the Roadside Assistance program at any time without notification.

General Motors North America and Cadillac may choose to limit services or payment to an owner or driver if they decide the driver is making claims too often or made the same type of claim too frequently.

Cadillac Owner Privileges™

- **Emergency Fuel Delivery:** Delivery of enough fuel for the vehicle to get to the nearest service station. Fuel will not be delivered to vehicles at a service station.
- **Lock-Out Service:** Service to unlock the vehicle if you cannot open the doors. For security reasons, the driver must present identification to receive service. A remote unlock may be available if you have OnStar.
- **Emergency Tow from a Public Road or Highway:** Tow to the nearest Cadillac dealer for warranty service, or if a vehicle cannot drive due to a crash.

NOT FOR RESALE

- **Flat Tire Change:** Service to change a flat tire with a spare tire. The spare tire, if equipped, must be in good condition and properly inflated. It is your responsibility for the repair or replacement of the tire if it is not covered by the warranty.
- **Battery Jump Start:** Service to jump start a dead battery.
- **Trip Interruption Benefits and Service:** If you cannot continue your trip due to a warranty failure, Roadside Assistance may reimburse incidental expenses This includes hotels, meals, and rental car or a vehicle being delivered back to the customer, up to 500 miles. Contact Cadillac Roadside Assistance for Trip Interruption eligibility at the time of vehicle disablement.

Cadillac Technician Roadside Assistance (U.S. Only)

Cadillac's Roadside Assistance provides U.S. Cadillac owners with the advantage of contacting a Cadillac advisor and, where available, a Cadillac trained dealer technician who can provide on-site service. Where available, a dealer technician will travel to your location. If unavailable, we will arrange to have your car towed to the nearest Cadillac Dealership. Each technician travels with a specially equipped service vehicle complete with the necessary Cadillac parts and tools required to handle most roadside repairs.

Services Not Included in Roadside Assistance

- Delivery of fuel to vehicles at a service station.
- Impound towing caused by violation of any laws
- Reimbursement of legal fines
- Reimbursement of police mandated tows
- Mounting, dismounting, or changing of snow tires, chains, or other traction devices
- Towing of anything attached to the vehicle like boats, campers, trailers, cargo boxes, etc.
- Vehicles stranded due to off-road driving
- Vehicles stuck in the sand, mud, or snow
- Ferry towing (Customers are responsible for the coordination and payment of any ferry involvement prior to Roadside dispatching)
- Airfare reimbursement

Roadside Assistance does not provide service if a vehicle is in an area that is not accessible to the service vehicle or is not a regularly traveled or maintained public road, which includes ice and winter roads. Customers do not receive vehicle service on restricted roadways. This includes, but are not partial to, some highways, tunnels, toll roads, toll bridges, turnpikes, and service roads.

Services Specific to Canadian-Purchased Vehicles

- **Fuel delivery:** Reimbursement is up to 7 liters. This service does not provide propane or other fuels. Fuel will not be delivered to vehicles at a service station.
- **Lock-Out Service:** Requires vehicle registration.
- **Trip Interruption Benefits and Assistance:** Must be traveling 150 km from the start of the trip to qualify. Benefits and assistance require pre-authorization, original detailed

NOT FOR RESALE

receipts, and a copy of the repair orders. When the Roadside Assistance advisor receives permission, they will help to explain and plan how to receive payment. Examples of benefits and assistance include hotels, meals, rental car, and delivering the vehicle back to the customer, up to 800 km.

- **Alternative Service:** The Roadside Assistance advisor may allow local emergency road service if the customer cannot receive immediate service. You will receive payment, up to $100, after sending the original receipt to Roadside Assistance. The vehicle owner is responsible for any costs for parts and labor for repairs the warranty does not cover. Coverage may also apply to mechanical failures.

Scheduling Service Appointments

If your vehicle requires service, contact your dealer and request an appointment. By scheduling a service appointment and advising the service consultant of your transportation needs, your dealer can help minimize your inconvenience. Be sure to notify your dealer of any safety-related concerns when requesting the appointment.

If you cannot schedule service immediately, keep driving the vehicle until your scheduled appointment, unless the problem is safety related.

If you are seeking a same-day repair, schedule your appointment as early in the day as possible.

Courtesy Transportation Program

GM and our participating dealers are proud to offer Courtesy Transportation. This customer support program minimizes inconvenience during warranty repairs for vehicles with the Bumper-to-Bumper (Base Warranty Coverage period in Canada), Federal Emission, Extended Powertrain, or Electric-specific warranties in both the U.S. and Canada.

Courtesy Transportation is not a part of the New Vehicle Limited Warranty. See the “Limited Warranty and Owner Assistance Information” manual for detailed new vehicle warranty coverage information.

Transportation Options

Warranty service is often completed while you wait. If not, your dealer may offer these transportation options:

Shuttle Service

One-way or round-trip shuttle service within a reasonable time and distance from your dealer.

Public Transportation, Ridesharing App, or Fuel Reimbursement

If your vehicle is kept overnight for repairs and you use public transportation or a ridesharing app, original receipts must support the expense within GM’s allowed maximum to qualify for reimbursement. If U.S. customers arrange their own transportation, limited reimbursement for reasonable fuel expenses may be available. Claims should reflect actual costs and must be supported by original receipts. See your dealer for information.

Courtesy Rental Vehicle

For an overnight warranty repair, the dealer may offer a courtesy rental vehicle or reimburse rental costs. Reimbursement requires original receipts, a signed and complete rental agreement, and must meet state/provincial, local and rental vehicle provider requirements, which may include, minimum age requirements, insurance coverage, and credit card. Additional fees for

NOT FOR RESALE

fuel, rental vehicle insurance, taxes, levies, usage fees, excessive mileage, or rental usage beyond the completion of the repair are your responsibility.

A like vehicle may not be available as a courtesy rental.

Additional Program Information

Not all program options, like shuttle service, are available at every dealer. Contact your dealer for availability.

General Motors reserves the right to unilaterally modify, change, or discontinue Courtesy Transportation at any time and to resolve all questions of claim eligibility pursuant to the terms and conditions described herein at its sole discretion.

If a Crash Occurs

If there has been an injury, call emergency services for help. Do not leave the scene of a crash until all parties address the matter. Move the vehicle only if its position puts you in danger, or a police officer tells you to move it.

Give only the necessary information to police and other parties involved in the crash.

For emergency towing see *Roadside Assistance Program* ⇨ *411*.

Gather the following information:

- Driver name, address, and telephone number
- Driver license number
- Owner name, address, and telephone number
- Vehicle license plate number
- Vehicle make, model, and model year
- Vehicle Identification Number (VIN)
- Insurance company and policy number
- General description of the damage to the other vehicle

Choose a reputable repair facility that uses quality replacement parts. See “Collision Parts” in *Collision Damage Repair* ⇨ *414*.

If the airbag has inflated, see *What Will You See After an Airbag Inflates?* ⇨ *75*.

Collision Damage Repair

If the vehicle is damaged in a collision, have it repaired by a qualified technician using the proper equipment and Genuine GM Collision replacement parts. Poorly performed collision repairs diminish the vehicle resale value and safety performance.

Managing the Vehicle Damage Repair Process

Repair Facility

Taking an active role in the vehicle repair process is important. Choose a collision repair facility that meets your needs before you ever need collision repairs. Your dealer may have a collision repair center with GM-trained technicians and state-of-the-art equipment or be able to recommend a collision repair center that has GM-trained technicians and comparable equipment.

If you have a preferred repair facility, take the vehicle there, or have it towed there. Specify to the facility that any required replacement collision parts be original equipment parts. Remember, only Genuine GM parts are covered by the GM vehicle warranty. See “Collision Parts” later in this section.

Collision Parts

Genuine GM Collision parts are new parts made with the same materials and construction methods as factory installed parts. Genuine

NOT FOR RESALE

GM Collision parts ensure that the vehicle's designed appearance, durability, and safety features are preserved. The use of Genuine GM parts can help maintain the GM New Vehicle Limited Warranty.

Recycled original equipment parts may be an acceptable choice to maintain the vehicle's appearance and safety performance; however, the history of these parts may not be known. Such parts are not covered by the GM New Vehicle Limited Warranty, and any related failures are not covered by that warranty.

Aftermarket collision parts made by companies other than GM may fit poorly, exhibit premature durability/corrosion problems, and may not perform properly in subsequent collisions. Aftermarket parts are not covered by the GM New Vehicle Limited Warranty, and any vehicle failure related to such parts is not covered by that warranty.

Insuring the Vehicle

Protect your GM vehicle with comprehensive and collision insurance coverage. There are significant differences in the quality of coverage afforded by various insurance policy terms. If the vehicle is repaired with any parts that are not GM original equipment collision parts, they will not be covered or under warranty. If such insurance coverage is not available from your current insurance carrier, consider switching to another insurance carrier.

If you are leasing your vehicle, the leasing company may require you to have insurance that ensures repairs with Genuine GM Original Equipment Manufacturer parts or Genuine Manufacturer replacement parts. Read the lease carefully, as you may be charged at the end of the lease for poor quality repairs.

Depending on your policy limits, your insurance company may initially value the repair using aftermarket parts. Discuss this with the repair professional and insist on Genuine GM parts. Remember, if the vehicle is leased, you may be obligated to have the vehicle repaired with Genuine GM parts, even if your insurance coverage does not pay the full cost.

If another party's insurance company is paying for the repairs, you are not obligated to accept a repair valuation based on that insurance company's collision policy repair limits, as you have no contractual limits with that company. In such cases, you can have control of the repair and parts choices if the cost stays within reasonable limits.

Publication Ordering Information

Service Manuals

Service manuals have the diagnosis and repair information on the engine/propulsion, transmission, axle, suspension, brakes, electrical system, steering system, body, etc.

Customer Literature

Owner’s manuals are written specifically for owners and are intended to provide basic operational information about the vehicle. The owner’s manual includes the Maintenance Schedule for all models.

Customer literature publications available for purchase include owner’s manuals, warranty manuals, and portfolios. Portfolios include an owner’s manual, warranty manual, if applicable, and zip lock bag or pouch.

Current and Past Models

Service manuals and customer literature are available for many GM vehicles.

NOT FOR RESALE

To check availability and to order, call 1-800-551-4123 Monday–Friday, 8:00 a.m.–6:00 p.m. Eastern Time

For credit card orders only (VISA, MasterCard, or Discover), see Helm, Inc. at: www.helminc.com.

To order by mail, write to:

Helm Incorporated
Attention: Customer Service
47911 Halyard Drive, Suite 200
Plymouth, MI 48170

Make checks payable in U.S. funds.

Radio Frequency Statement

This vehicle uses license-exempt transmitters / receivers / systems that operate on a radio frequency that complies with Part 15/Part 18 of the Federal Communications Commission (FCC) rules and with Innovation, Science and Economic Development (ISED) Canada's license-exempt RSS(s) / RSP-100 / ICES-GEN.

Operation is subject to the following two conditions:

1. The device may not cause harmful interference.
2. The device must accept any interference received, including interference that may cause undesired operation of the device.

Changes or modifications to any of these systems by other than an authorized service facility could void authorization to use this equipment.

Disclosures (New Mexico)

Reporting Safety Defects

Reporting Safety Defects to the United States Government

If you believe that your vehicle has a defect which could cause a crash or could cause injury or death, you should immediately inform the National Highway Traffic Safety Administration (NHTSA) in addition to notifying General Motors.

If NHTSA receives similar complaints, it may open an investigation, and if it finds that a safety defect exists in a group of vehicles, it may order a recall and remedy campaign. However, NHTSA cannot become involved in individual problems between you, your dealer, or General Motors.

To contact NHTSA, you may call the Vehicle Safety Hotline toll-free at 1-888-327-4236 (TTY: 888-275-9171); go to *https://www.safercar.gov;* or write to:

Administrator, NHTSA
1200 New Jersey Avenue, S.E.,
Washington, D.C. , 20590

NOT FOR RESALE

You can also obtain other information about motor vehicle safety from *https://www.safercar.gov*.

Reporting Safety Defects to the Canadian Government

If you live in Canada, and you believe that the vehicle has a safety defect, notify Transport Canada immediately, and notify General Motors of Canada Company. Call Transport Canada at 1-800-333-0510; go to:

www.tc.gc.ca/recalls (English)

www.tc.gc.ca/rappels (French)

or write to:

Transport Canada
Motor Vehicle Safety Directorate
Defect Investigations and Recalls Division
80 Noel Street
Gatineau , QC J8Z 0A1

Reporting Safety Defects to General Motors

In addition to notifying National Highway Traffic Safety Administration (NHTSA) (or Transport Canada) in a situation like this, notify General Motors.

In the U.S., call 1-800-458-8006, or write:

Cadillac Customer Assistance Center
Cadillac Motor Car Division
P.O. Box 33169
Detroit, MI 48232-5169

In Canada, call 1-888-446-2000, or write:

Canadian Cadillac Customer Care Centre
General Motors of Canada Company
500 Wentworth Street W
Oshawa, ON L1J 0C5

In Mexico, call 800-466-0805 or 800-212-2345.

In other Central America and Caribbean Countries, call 52-555-901-2369.

Vehicle Data Recording and Privacy

The vehicle has a number of computers that record information about the vehicle's performance and how it is driven or used. For example, the vehicle uses computer modules to monitor and control engine and transmission performance, to monitor the conditions for airbag deployment and deploy them in a crash, and, if equipped, to provide antilock braking to help the driver control the vehicle. These modules may store data to help the dealer technician service the vehicle or to help GM improve safety or features. Some modules may also store data about how the vehicle is operated, such as rate of fuel consumption or average speed. These modules may retain personal preferences, such as radio presets, seat positions, and temperature settings.

Cybersecurity

GM collects information about the use of your vehicle including operational and safety related information. We collect this information to provide, evaluate, improve, and troubleshoot our products and services and to develop new products and services. The protection of vehicle electronics systems and customer data from unauthorized outside electronic access or control is important to GM. GM maintains appropriate security standards, practices, guidelines, and controls aimed at defending the vehicle and the vehicle service

NOT FOR RESALE

ecosystem against unauthorized electronic access, detecting possible malicious activity in related networks, and responding to suspected cybersecurity incidents in a timely, coordinated and effective manner. Security incidents could impact your safety or compromise your private data. To minimize security risks, please do not connect your vehicle electronic systems to unauthorized devices or connect your vehicle to any unknown or untrusted networks (such as Bluetooth, Wi-Fi, or similar technology). In the event you suspect any security incident impacting your data or the safe operation of your vehicle, please stop operating your vehicle and contact your dealer.

Event Data Recorders

This vehicle is equipped with an Event Data Recorder (EDR). The main purpose of an EDR is to record, in certain crash or near crash-like situations, such as an air bag deployment or hitting a road obstacle, data that will assist in understanding how a vehicle's systems performed. The EDR is designed to record data related to vehicle dynamics and safety systems for a short period of time, typically 30 seconds or less. The EDR in this vehicle is designed to record such data as:

- How various systems in your vehicle were operating;
- Whether or not the driver and passenger safety belts were buckled/fastened;
- How far (if at all) the driver was depressing the accelerator and/or brake pedal; and,
- How fast the vehicle was traveling.

These data can help provide a better understanding of the circumstances in which crashes and injuries occur.

Note
EDR data are recorded by your vehicle only if a non-trivial crash situation occurs; no data are recorded by the EDR under normal driving conditions and no personal data (e.g., name, gender, age, and crash location) are recorded. However, other parties, such as law enforcement, could combine the EDR data with the type of personally identifying data routinely acquired during a crash investigation.

To read data recorded by an EDR, special equipment is required, and access to the vehicle or the EDR is needed. In addition to the vehicle manufacturer, other parties, such as law enforcement, that have the special equipment, can read the information if they have access to the vehicle or the EDR.

GM will not access these data or share it with others except: with the consent of the vehicle owner or, if the vehicle is leased, with the consent of the lessee; in response to an official request by police or similar government office; as part of GM's defense of litigation through the discovery process; or, as permitted by law. Data that GM collects or receives may also be used for GM research needs or may be made available to others for research purposes, where a need is shown and the data is not tied to a specific vehicle or vehicle owner.

OnStar

If the vehicle is equipped with OnStar and has an active service plan, additional data may be collected and transmitted through the OnStar system. This includes information about the vehicle's operation; collisions involving the vehicle; the use of the vehicle and its features, including infotainment; and the location and

NOT FOR RESALE

approximate GPS speed of the vehicle. Refer to the OnStar Terms and Conditions and Privacy Statement on the OnStar website.

See *OnStar Additional Information* ⇨ *421*.

Infotainment System

If the vehicle is equipped with a navigation system as part of the infotainment system, use of the system may result in the storage of destinations, addresses, telephone numbers, and other trip information. See the infotainment section for information on stored data and for deletion instructions.

NOT FOR RESALE

OnStar

OnStar Overview
OnStar Overview 420
OnStar Services
Emergency 421
Security 421
OnStar Additional Information
OnStar Additional Information 421

OnStar Overview

This vehicle may be equipped with a comprehensive, in-vehicle system that can connect to an OnStar Advisor for Emergency, Security, Navigation, Connection, and Diagnostic Services. OnStar services may require a paid service plan and data plan. OnStar requires the vehicle battery and electrical system, cellular service, and GPS satellite signals to be available and operating. OnStar acts as a link to existing emergency service providers.

OnStar may collect information about you and your vehicle, including location information. See OnStar User Terms, Privacy Statement, and Software Terms for more details including system limitations at www.onstar.com (U.S.) or www.onstar.ca (Canada).

White OnStar Button

Blue OnStar Button

Red Emergency Button

The OnStar system status light is next to the OnStar buttons. When the status light is:

- Solid Green: the system is ready.
- Flashing Green: the system is on a call.
- Red: a problem has been detected.
- Off: the system is off. Press twice to speak with an OnStar Advisor.

Press or call 1-888-4ONSTAR (1-888-466-7827) to speak to an OnStar Advisor.

Press to end ongoing calls with an OnStar Advisor.

Press to connect to the OnStar Virtual Assistant to:

- Verify account information or update contact information.
- Request driving directions.
- Request a Diagnostic check of essential operating systems.
- Request Roadside Assistance.
- Manage Wi-Fi Settings, if equipped.

NOT FOR RESALE

Press SOS to get a priority connection to an OnStar Advisor available 24/7 to:

- Request help for an emergency, severe weather, or other crisis situations, and find evacuation routes.
- Be a Good Samaritan or respond to an AMBER Alert.

OnStar Services

Emergency

Emergency Services require an active safety and security plan. With Automatic Crash Response, built-in sensors can automatically connect an OnStar Advisor into the vehicle to help.

Press SOS for a priority connection to an OnStar Advisor who can contact emergency service providers, direct them to your exact location, and relay vital information.

With OnStar Crisis Assist, specially trained OnStar Advisors are available 24 hours a day, 7 days a week, to provide a central point of contact, assistance, and information during a crisis.

With Roadside Assistance, OnStar Advisors can locate a nearby service provider to help with a flat tire or a battery jump.

Security

If equipped, OnStar provides these services:

- Stolen Vehicle Assistance: OnStar Advisors can use GPS to locate the vehicle and help authorities quickly recover it.
- Remote Ignition Block: OnStar can block the vehicle from restarting.
- Stolen Vehicle Slowdown: OnStar can work with law enforcement to gradually slow the vehicle down.

Theft Alarm Notification

When the vehicle alarm system is armed and the alarm is activated, an alert by text, email, or app push notification is sent. If the vehicle is stolen, an OnStar Advisor can work with authorities to recover the vehicle.

OnStar Additional Information

In-Vehicle Audio Messages

Audio messages may play important information at the following times:

- Prior to vehicle purchase. Press On to set up an account.
- After change in ownership.
- Periodically to verify vehicle connectivity status.

Transferring Service

Press On to request account transfer eligibility information. The OnStar Advisor can cancel or change account information.

Selling/Transferring the Vehicle

Call 1-888-4ONSTAR (1-888-466-7827) immediately to terminate your OnStar or connected services if the vehicle is disposed of, sold, transferred, or if the lease ends.

NOT FOR RESALE

Reactivation for Subsequent Owners

Press and follow the prompts to speak to an OnStar Advisor as soon as possible. The OnStar Advisor will update vehicle records and explain OnStar or connected service options.

How OnStar Service Works

Automatic Crash Response, Emergency Services, Crisis Assist, Stolen Vehicle Assistance, Remote Services, and Roadside Assistance are available on most vehicles. Not all OnStar services are available everywhere or on all vehicles. For more information, a full description of OnStar services, system limitations, and OnStar User Terms, Privacy Statement, and Software Terms:

- Call 1-888-4ONSTAR (1-888-466-7827).
- See www.onstar.com (U.S.).
- See www.onstar.ca (Canada).
- Call TTY 1-877-248-2080.
- Press to speak with an OnStar Advisor.

OnStar or connected services cannot work unless the vehicle is in a place where OnStar has an agreement with a wireless service provider for service in that area. The wireless service provider must also have coverage, network capacity, reception, and technology compatible with OnStar or connected services. Service involving location information about the vehicle cannot work unless GPS signals are available, unobstructed, and compatible with the OnStar hardware. OnStar or connected services may not work if the OnStar equipment is not properly installed or it has not been properly maintained. If equipment or software is added, connected, or modified, OnStar or connected services may not work. Other problems beyond the control of OnStar — such as hills, tall buildings, tunnels, weather, electrical system design and architecture of the vehicle, damage to the vehicle in a crash, or wireless phone network congestion or jamming — may prevent service.

Services for People with Disabilities

OnStar Advisors provide services to help with physical disabilities and medical conditions.

Press to help:

- Find a hotel, restaurant, etc., that meets accessibility needs.
- Provide directions to the closest hospital or pharmacy in urgent situations.

TTY Users

OnStar has the ability to communicate to deaf, hard-of-hearing, or speech-impaired customers while in the vehicle. If equipped, the TTY system provides in-vehicle access to all OnStar services, except OnStar Turn-by-Turn Navigation.

Turn your vehicle on and keep it in P (Park). From the infotainment apps screen, access TTY by touching Settings > Apps > Phone > TTY > Enable OnStar TTY mode. When TTY mode is active, you can make and receive phone calls using the infotainment display.

OnStar Personal Identification Number (PIN)

A PIN is needed to access some OnStar services. The PIN will need to be changed the first time when speaking with an OnStar Advisor. To change the OnStar PIN, contact an OnStar Advisor by pressing or calling 1-888-4ONSTAR.

Warranty

OnStar equipment may be warranted as part of the vehicle warranty.

NOT FOR RESALE

Languages

The vehicle can be programmed to respond in multiple languages. Press On and ask for an OnStar Advisor. OnStar Advisors are available in English, Spanish, and French. Available languages may vary by country.

Potential Issues

OnStar cannot perform Remote Door Unlock or Stolen Vehicle Assistance after the vehicle has been off continuously for an extended period of time without being started. To find out the duration of time that applies for the vehicle, contact an OnStar Advisor by pressing On or calling 1-888-4ONSTAR. If the vehicle has not been started for an extended period of time, OnStar can contact Roadside Assistance or a locksmith to help gain access to the vehicle.

Global Positioning System (GPS)

- Obstruction of the GPS can occur in a large city with tall buildings; in parking garages; around airports; in tunnels and underpasses; or in an area with very dense trees. If GPS signals are not available, the OnStar system should still operate to call OnStar. However, OnStar could have difficulty identifying the exact location.
- In emergency situations, OnStar can use the last stored GPS location to send to emergency responders.

A temporary loss of GPS can cause loss of the ability to send a Turn-by-Turn Navigation route. The OnStar Advisor may give a verbal route or may ask for a call back after the vehicle is driven into an area with greater access to GPS signal.

Cellular and GPS Antennas

Cellular reception is required for OnStar to send remote signals to the vehicle. Do not place items over or near the antenna to prevent blocking cellular and GPS signal reception.

Unable to Connect to OnStar Message

If there is limited cellular coverage or the cellular network has reached maximum capacity, this message may come on. Press On to try the call again or try again after driving a few miles into another cellular area.

Vehicle and Power Issues

OnStar services require a vehicle electrical system, wireless service, and GPS satellite technologies to be available and operating for features to function properly. These systems may not operate if the battery is discharged or disconnected.

Add-on Electrical Equipment

The OnStar system is integrated into the electrical architecture of the vehicle. Do not add any electrical equipment. See *Add-On Electrical Equipment* ⇨ *307*. Added electrical equipment may interfere with the operation of the OnStar system and cause it to not operate.

Vehicle Software Updates

OnStar or GM may remotely deliver software updates or changes to the vehicle without further notice or consent. These updates or changes may enhance or maintain safety, security, or the operation of the vehicle or the vehicle systems. Software updates or changes may affect or erase data or settings that are stored in the vehicle, such as saved navigation destinations or pre-set radio stations. Neither OnStar nor GM is responsible for any affected or erased data or settings. These updates or changes may also collect personal information. Such collection is described in the OnStar Privacy Statement or separately disclosed at the time of installation. These updates

NOT FOR RESALE

or changes may also cause a system to automatically communicate with GM servers to collect information about vehicle system status, identify whether updates or changes are available, or deliver updates or changes. An active OnStar agreement constitutes consent to these software updates or changes and agreement that either OnStar or GM may remotely deliver them to the vehicle.

Connected Services Privacy Statement

The complete OnStar Privacy Statement may be found at www.onstar.com (U.S.), or www.onstar.ca (Canada). We recommend that you review it. If you have any questions, call 1-888-4ONSTAR (1-888-466-7827) or press to speak with an OnStar Advisor. Users of wireless communications are cautioned that the privacy of any information sent via wireless cellular communications cannot be assured. Third parties may unlawfully intercept or access transmissions and private communications without consent.

OnStar – Software Acknowledgements

To obtain the source code under GPL, LGPL, MPL, and other open source licenses, that is contained in this product, please visit www.opensourceautomotive.com/an/GM. In addition to the source code, all referred license terms, warranty disclaimers, and copyright notices are available for download. This offer is valid for a period of three years after our last shipment of this product. This offer is valid to anyone in receipt of this information.

*Provided through Aumovio, Inc., who is solely responsible for provisions of related OSS compliance.

NOT FOR RESALE

Connected Services

Connected Services
Navigation 425
Connections 425
Diagnostics 426
Vehicle Updates
How Your Vehicle is Updated 427
Vehicle Update Additional Information .. 427

Navigation

Connected navigation services enable you to use the vehicle's mobile app or an OnStar Advisor to get route guidance.

If equipped, you can send destinations from the myCadillac mobile app to the Turn-by-Turn or built-in navigation system.

An active OnStar or connected services plan is required. Services vary by model. Map coverage is available in the United States (www.onstar.com) and Canada (www.onstar.ca).

Turn-by-Turn Navigation

OnStar Turn-by-Turn Navigation provides voice-guided driving directions using GPS technology.

To get directions, push the Blue OnStar button and request Turn-by-Turn directions. The OnStar Virtual Assistant will send detailed directions to the Turn-by-Turn Navigation system.

Automated voice-guided directions will take you to your set destination.

If you are in an area where Turn-by-Turn is not available, push to speak to an OnStar Advisor. The OnStar Advisor will be able to give real-time navigation instructions.

Destination Download

If equipped, OnStar can send directions to the vehicle's built-in navigation system. Press , then ask the OnStar Virtual Assistant to download directions to the built-in navigation system.

After the navigation session is downloaded, the navigation screen will provide prompts to begin driving directions.

Downloaded routes can only be canceled through the built-in navigation system.

Connections

The following services allow you to monitor your vehicle status, manage your vehicle Wi-Fi services, and safeguard your personal data.

For coverage maps, see www.onstar.com (U.S.) or www.onstar.ca (Canada).

NOT FOR RESALE

Wi-Fi Hotspot

If equipped, the built-in Wi-Fi hotspot provides 5G access to in-vehicle experiences such as navigation apps, voice assistance, audio and visual HD streaming apps in select vehicles. Multiple devices can be connected. A data plan is required.

Only use the in-vehicle controls when it is safe to do so. See *Distracted Driving* ➪ *190*.

To retrieve Wi-Fi hotspot information, select the Wi-Fi Hotspot icon on the infotainment app screen.

The Wi-Fi settings will display:

- The Wi-Fi hotspot name (Service Set Identifier) and password.
- The connection type (no Internet connection, 4G, 4G LTE, 5G) and signal quality (poor, good, excellent), if equipped.

The connection type icon may not illuminate even though the vehicle has an active connection.

Connect with an OnStar Advisor to edit the Wi-Fi hotspot name or password. See *OnStar Overview* ➪ *420*. On some vehicles, you can edit the Wi-Fi hotspot name and password in the Wi-Fi Hotspot menu.

After initial setup, the Wi-Fi hotspot will connect automatically to your mobile devices.

Manage data usage by turning Wi-Fi on or off on your mobile device, using the myCadillac mobile app, or by contacting an OnStar Advisor.

myCadillac App

To remotely connect to your vehicle, download the myCadillac mobile app to a compatible Apple or Android device. For specific app features, see my.cadillac.com.

To use the app, you will need:

- An active OnStar or connected services plan.
- A compatible mobile device.
- Factory-installed remote start and power door locks.

Data rates apply.

See www.cadillac.com or www.onstar.com for details and system limitations.

Security Best Practices

To protect your personal data:

- Change the default password for the myCadillac mobile app. Use a combination of letters and numbers to increase the security.
- Change the Wi-Fi hotspot name (Service Set Identifier) and password. The Service Set Identifier is your network's name that is visible to other wireless devices. Choose a unique name and avoid family names or vehicle descriptions.

Diagnostics

OnStar's Vehicle Diagnostics

If equipped and enabled, OnStar's Vehicle Diagnostics monitors and reports on the health of your vehicle's central operating systems. Capabilities vary by model. See www.onstar.com (U.S.) or www.onstar.ca (Canada) for details and system limitations.

myCadillac App

You can remotely check your vehicle status through the myCadillac app.

Features are subject to change. For updates on feature capabilities, see www.cadillac.com/owners. Message and data rates may apply.

NOT FOR RESALE

Vehicle Updates

How Your Vehicle is Updated

If equipped, the vehicle can download and install select software updates over a wireless connection. The system will prompt for certain updates to be downloaded and/or installed.

To manually check for updates, select Settings > Updates. Follow the on-screen prompts to download and/or install the update. The steps to check for, download, and install updates may vary by vehicle.

During the software download, the vehicle can be used normally. Once the download is complete, the vehicle may prompt you to install when shifting into P (Park).

During the software installation, the vehicle will be disabled and cannot be driven. The system will show the installation progress and will notify you of success or failure once the installation is complete.

Your vehicle must be connected to the internet to download Over-the-Air vehicle software updates, which can be accessed through the vehicle's built-in internet connection. If required, data plans are provided by a third party. A secure Wi-Fi hotspot such as a compatible mobile, home, or public hotspot can be used. Applicable data rates may apply.

To connect the infotainment system to a secured hotspot, select Settings > Connections > Wi-Fi Networks. Select the appropriate Wi-Fi network and follow the on-screen prompts.

Download speeds may vary. On most compatible mobile devices, activation of the Wi-Fi hotspot is in the Settings menu under Mobile Network Sharing, Personal Hotspot, Mobile Hotspot, or similar. Availability of Over-the-Air software updates varies by vehicle and country. Features are subject to change.

For more information on this feature, see *Online Account and Customer Support* ⇨ *410*.

Vehicle Update Additional Information

If you have accepted the terms and conditions and have an active connected services package for your vehicle, GM may remotely deliver software updates or changes to the vehicle without further notice or consent. These updates or changes may enhance or maintain safety, security, or the operation of the vehicle or the vehicle systems. Software updates or changes may affect or erase data or settings that are stored in the vehicle, such as saved navigation destinations or pre-set radio stations. GM is not responsible for any affected or erased data or settings. These updates or changes may also collect personal information. Such collection is described in the privacy statement or separately disclosed at the time of installation. These updates or changes may also cause a system to automatically communicate with GM servers to collect information about vehicle system status, identify whether updates or changes are available, or deliver updates or changes. An active connectivity agreement constitutes consent to these software updates or changes and agreement that GM may remotely deliver them to the vehicle.

Data Download

If the vehicle is equipped with and has an active connected services plan, additional data may be collected through the connected services system. This includes information about: the vehicle's operation, a crash involving the vehicle, the use of the vehicle and its features, and, in certain situations, the location and approximate GPS speed of the

NOT FOR RESALE

vehicle. Refer to the Terms and Conditions and Privacy Statement on the website. See www.cadillac.com.

Wireless Configuration

Export of this vehicle to another region may require reset of internal settings for wireless communication configuration to ensure regulatory compliance or enable connectivity. See your dealer. The end-user of the device does not have an option to modify the regulatory wireless configuration.

NOT FOR RESALE

Index

A

Accessories and Modifications..... 309
Accessory Power..... 209
Adaptive
Cruise Control..... 132, 231
Additional
OnStar Information..... 421
Add-On Electrical Equipment..... 307
Advanced
Driver Assistance Systems..... 271
Agreements
Trademarks and License..... 180
Aiming
Headlight, Front..... 332
Air
Cleaner/Filter, Engine..... 318
Filter Life System..... 318
Filter, Passenger Compartment..... 187
Suspension..... 228
Suspension Light..... 129
Vents..... 186
Airbags
Adding Equipment to the Vehicle..... 80
How Does an Airbag Restrain?..... 74
Passenger Sensing System..... 76
Passenger Status Indicator..... 121
Readiness Light..... 120
Replacing System Parts after a Crash..... 81
Servicing Airbag-Equipped Vehicles..... 79
System..... 71
System Check..... 80
What Makes an Airbag Inflate?..... 74
What Will You See after an Airbag Inflates?..... 75
When Should an Airbag Inflate?..... 73
Where Are the Airbags?..... 72
Alarm
Vehicle Security..... 29
Alert
Blind Zone Steering Assist (BZSA)..... 297
Lane Change (LCA)..... 294
Rear Cross Traffic..... 282
Rear Pedestrian..... 281
All-Season Tires..... 346
Ambient Lighting..... 149
AM-FM Radio..... 156
Antenna
Multi-band..... 158
Antilock Brake System (ABS)..... 220
Warning Light..... 124
Appearance Care
Exterior..... 384
Interior..... 389
Apple CarPlay and Android Auto..... 173
Assistance
Program, Roadside..... 411

NOT FOR RESALE

Assistance Systems
Advanced... 271
Automatic Emergency Braking (AEB).... 286
Automatic Parking Assist (APA)... 278
Blind Zone Steering (BZSA)... 297
Driver Attention... 300
Driving... 284
Forward Collision Alert (FCA) System.... 284
Front Pedestrian Braking (FPB)... 290
Lane Change Alert (LCA)... 294
Lane Keep Assist (LKA)... 301
Night Vision... 292
Parking... 276
Parking and Backing... 272
Rear Cross Traffic Alert (RCTA)... 282
Rear Pedestrian Alert... 281
Rear Vision Camera (RVC)... 273
Reverse Automatic Braking (RAB)... 280
Surround Vision Recorder... 302
Surround Vision System... 273
Traffic Sign... 298
Audio
Bluetooth... 159
Automatic
Dimming Mirrors... 34
Door Locks... 18
Emergency Braking (AEB) Disabled Light... 126
Parking Assist (APA)... 278
Transmission... 210
Transmission Fluid... 318
Vehicle Hold (AVH)... 222
Automatic Transmission
Manual Mode... 214
Auto Stop
Indicator... 131
Avoiding Untrusted Media Devices... 158
Axle
Front... 329
Rear... 329

B

Battery
Exterior Lighting Battery Saver... 151
Jump Starting... 377
Load Management... 150
Power Protection... 150
Battery - North America... 327
Blade Replacement, Wiper... 329
Bluetooth
Audio... 159
Overview... 167, 168
Brake
Pad Life System... 326
Brakes... 325
Antilock... 220
Brake Assist... 222
Electric Brake Boost... 220
Electric Parking Brake... 220
Fluid... 326
System Warning Light... 123
Braking... 191
Automatic Emergency (AEB)... 286
Front Pedestrian (FPB) System... 290
Post-Collision... 222
Reverse Automatic... 280
Break-In, New Vehicle... 204
Buckle To Drive... 63
Buying New Tires... 359

C

Calibration
Compass... 113
California
Perchlorate Materials Requirements..... 309
Proposition 65 Warning... 1
Warranty Information... 408
Camera
Rear Vision (RVC)... 273
Canadian Vehicle Owners... 2
Capacities and Specifications... 403
Carbon Monoxide
Engine Exhaust... 210
Liftgate... 23
Winter Driving... 198
Cargo
Tie-Downs... 107

NOT FOR RESALE

Caution, Danger, and Warning..... 2
Center
Console, Storage..... 104
Chains and Other Traction Devices
Tire..... 363
Charging
System Light..... 121
Charging Phone
Wireless..... 114
Child Restraints
Infants and Young Children..... 83
Lower Anchors and Tethers for
Children..... 89
Older Children..... 81
Securing..... 96, 98
Systems..... 85
Where to Put..... 87
Child Safety Locks..... 18
Circuit Breakers..... 333
Cleaning
Exterior Care..... 384
Interior Care..... 389
Climate Control Systems..... 183
Rear..... 185
Clock..... 113
Setting..... 174
Cluster, Instrument..... 117
Collision Alert
Forward (FCA) System..... 284
Collision Damage Repair..... 414
Compartments
Storage..... 102
Compass..... 113
Connected Services
Connections..... 425
Diagnostics..... 426
Navigation..... 425
Connections
Connected Services..... 425
Control
of a Vehicle..... 191
Traction and Electronic Stability..... 223
Controls
Headlight..... 143
Steering Wheel..... 154
Convenience Net..... 107
Convex Mirrors..... 32
Coolant
Engine Temperature Warning Light..... 128
Cooling and Heating..... 183
Cooling System..... 320
Courtesy Transportation Program..... 413
Cruise Control
Adaptive..... 231
Light..... 132
Super..... 255
Cupholders..... 102
Customer Assistance
Offices..... 410
Text Telephone (TTY) Users..... 410
Customer Information
Publications Ordering Information..... 415
Customer Satisfaction Procedure..... 406
Customer Support
and Online Account..... 410
Cybersecurity..... 417

D

Damage Repair, Collision..... 414
Danger, Warning, and Caution..... 2
Dashboard..... 5
Data Collection
Infotainment System..... 419
OnStar..... 418
Data Recorders, Event..... 418
Daytime Running Lights..... 145
Defensive Driving..... 191
Delayed
Locking..... 18
Destination..... 164
Diagnostics
Connected Services..... 426
Differential, Limited-Slip..... 228
Digital
Key..... 19

NOT FOR RESALE

Disabled Vehicle
Transporting..... 380
Disclosures..... 416
Distracted Driving..... 190
Dome Lights..... 148
Door
Ajar Light..... 132
Delayed Locking..... 18
Locks..... 15
Operation..... 21
Power Locks..... 17
Drive Belt Routing, Engine..... 405
Driver
Assistance Systems, Advanced..... 271
Attention Assist..... 300
Information Center (DIC)..... 132
Mode Control..... 224
Mode Control Light..... 128
Teen..... 177
Drive Systems
Four-Wheel Drive..... 328
Driving
Assistance Systems..... 284
Defensive..... 191
for Better Fuel Economy..... 190
Hill and Mountain Roads..... 198
If the Vehicle is Stuck..... 199
Impaired..... 191
Loss of Control..... 193
Off-Road..... 193
Off-Road Recovery..... 192
Vehicle Load Limits..... 200
Wet Roads..... 197
Winter..... 198
Dynamic Fuel Management..... 209

E

Electric
Brake Boost..... 220
Parking Brake..... 220
Parking Brake Light..... 124
Electrical
Equipment, Add-On..... 307
Electrical System
Engine Compartment Fuse Block..... 334
Fuses and Circuit Breakers..... 333
Instrument Panel Fuse Block..... 339
Overload..... 332
Rear Compartment Fuse Block..... 343
Electronic Stability Control (ESC) Off
Light..... 127
Emergency
OnStar..... 421
Engine
Air Cleaner/Filter..... 318
Air Filter Life System..... 318
Check Light (Malfunction Indicator)..... 122
Compartment Overview..... 312
Coolant Temperature Warning Light..... 128
Cooling System..... 320
Drive Belt Routing..... 405
Exhaust..... 210
Fan..... 324
Heater..... 208
Oil Life System..... 317
Oil Pressure Light..... 130
Overheating..... 322
Power Messages..... 139
Running While Parked..... 210
Starting..... 206
Entry Lighting..... 148
Event Data Recorders..... 418
Exit Lighting..... 149
Extended Parking..... 209
Extender, Seat Belt..... 69
Exterior
Lighting Battery Saver..... 151

F

Fan
Engine..... 324
Filter
Engine Air Cleaner..... 318
Flashers, Hazard Warning..... 146
Flat Tire..... 363
Changing..... 365
Floor Mats..... 392

NOT FOR RESALE

Fluid
Automatic Transmission..... 318
Brakes..... 326
Washer..... 324
Folding Mirrors..... 33
Follow Distance Indicator Light..... 126
Four-Wheel Drive..... 215, 328
Light..... 124
Frequency Statement
Radio..... 416
Front
Axle..... 329
Fuel
Recommended..... 304
Additives..... 304
Dynamic Management..... 209
Economy, Driving for Better..... 190
Filling a Portable Fuel Container..... 306
Filling the Tank..... 304
Foreign Countries..... 304
Gauge..... 118
Low Fuel Warning Light..... 130
Prohibited Fuels..... 304
Top Tier..... 303
Full-Size Spare Tire..... 376
Fuses
Engine Compartment Fuse Block..... 334
Fuses and Circuit Breakers..... 333
Instrument Panel Fuse Block..... 339
Rear Compartment Fuse Block..... 343

G

Garage Door Opener
Programming..... 140
Gas Strut(s)..... 331
Gauges
Fuel..... 118
Odometer..... 118
Speedometer..... 118
Tachometer..... 118
Trip Odometer..... 118
Warning Lights and Indicators..... 116
General Information
Service and Maintenance..... 394
Towing..... 306
Vehicle Care..... 309
Glass Replacement..... 330
Global Positioning System (GPS)..... 165
Glove Box..... 102
GM Mobility Reimbursement Program..... 411
Guidance
Problems with the Route..... 165

H

Hands-On Steering Assist..... 242
Hands-On Steering Assist Light..... 125
Hazard Warning Flashers..... 146
Headlights
Aiming, Front..... 332
Controls..... 143
High-Beam On Light..... 131
Leveling Control..... 146
Off Reminder..... 145
Service System Indicator..... 131
System, Automatic..... 145
Head Restraints..... 42
Head-Up Display (HUD)..... 137
Heated
and Ventilated Front Seats..... 50
and Ventilated Rear Seats..... 59
Mirrors..... 34
Steering Wheel..... 110
Heater
Engine..... 208
Heating and Cooling..... 183
High-Beam
On Light..... 131
Systems..... 144
High-Speed Operation..... 352
Hill
and Mountain Roads..... 198
Start Assist (HSA)..... 222
Hood..... 310
Horn..... 110
How to Wear Seat Belts Properly..... 64
How Your Vehicle is Updated..... 427

NOT FOR RESALE

I

If a Crash Occurs..... 414
Ignition Positions..... 204
Immobilizer Operation..... 31
Indicators
Auto Stop..... 131
Pedestrian Ahead..... 126
Service Headlight System..... 131
Vehicle Ahead..... 126
Warning Lights and Gauges..... 116
Infants and Young Children, Restraints..... 83
Information
Publication Ordering..... 415
Infotainment
Passenger..... 159
Using the System..... 154
Inspection
Multi-Point Vehicle..... 398
Instrument
Cluster..... 117
Instrument Panel Overview..... 5
Interior
Rearview Mirrors..... 34
Introduction..... 2, 152

J

Jump
Starting..... 377

K

Keys..... 8
Digital..... 19
Remote..... 9
Remote Operation..... 9

L

Labeling, Tire Sidewall..... 347
Lane
Keep Assist Light..... 125
Lap-Shoulder Belt..... 66
LATCH System
Replacing Parts after a Crash..... 96
LED Lighting..... 332
Liftgate..... 23
Lighting
Ambient..... 149
Entry..... 148
Exit..... 149
Illumination Control..... 147
LED..... 332
Lights
Adaptive Cruise Control..... 132
Air Suspension..... 129
Airbag Readiness..... 120
Antilock Brake System (ABS)
Warning..... 124
Automatic Emergency Braking (AEB)
Disabled..... 126
Automatic Vehicle Hold (AVH)..... 125
Brake System Warning..... 123
Charging System..... 121
Cruise Control Light..... 132
Daytime Running..... 145
Dome..... 148
Door Ajar..... 132
Driver Mode Control..... 128
Electric Parking Brake..... 124
Electronic Stability Control (ESC), Off..... 127
Engine Coolant Temperature
Warning..... 128
Engine Oil Pressure..... 130
Exterior Lighting Battery Saver..... 151
Follow Distance Indicator..... 126
Four-Wheel-Drive..... 124
Gauges and Indicators..... 116
Hands-On Steering Assist..... 125
High-Beam On..... 131
Lane Keep Assist..... 125
Low Fuel Warning..... 130
Malfunction Indicator (Check Engine)..... 122
On Reminder..... 132
Reading..... 148
Seat Belt Reminders..... 119
Security..... 131
Service Electric Parking Brake..... 124

NOT FOR RESALE

Super Cruise..... 132
Tire Pressure..... 129
Traction Control System (TCS)/
Electronic Stability Control Light..... 127
Traction Off..... 127
Limited-Slip Differential..... 228
Locks
Automatic Door..... 18
Delayed Locking..... 18
Door..... 15
Lockout Protection..... 18
Power Door..... 17
Safety..... 18
Steering Column..... 31
Loss of Control..... 193
Lower Anchors and Tethers for Children
(LATCH System)..... 89
Low Fuel Warning Light..... 130
Low-Profile Tires..... 347
Lumbar Adjustment
Front Seats..... 46

M

Magnetic Ride Control..... 228
Maintenance
Recommended Fluids and
Lubricants..... 400
Records..... 401
Schedule..... 395
Manual
Mode..... 214
Maps..... 163
Massage
Seats..... 47
Media
Avoiding Untrusted Devices..... 158
Memory Seats..... 47
Messages
Engine Power..... 139
Vehicle..... 139
Vehicle Speed..... 139
Mirrors
Automatic Dimming..... 34
Automatic Dimming Rearview..... 34
Convex..... 32
Folding..... 33
Heated..... 34
Interior Rearview..... 34
Power..... 32
Rear Camera..... 34
Tilt in Reverse..... 34
Modes
Driver Control..... 224
Monitor System, Tire Pressure..... 353
Multi-band Antenna..... 158
Multi-Point Vehicle Inspection (MPVI)..... 398

N

Navigation
Connected Services..... 425
Destination..... 164
Symbols..... 163
Using the System..... 162
Net, Convenience..... 107
New Vehicle Break-In..... 204
Night Vision System..... 292

O

Odometer..... 118
Trip..... 118
Off-Road
Driving..... 193
Recovery..... 192
Oil
Engine..... 315
Engine Oil Life System..... 317
Pressure Light..... 130
Older Children, Restraints..... 81
Online Account and Customer Support..... 410
OnStar..... 418
Additional Information..... 421
Emergency..... 421
Overview..... 420
Security..... 421

NOT FOR RESALE

Outlets
Power..... 113
Overheating, Engine..... 322
Overview..... 153
Instrument Panel..... 5

P

Park
Assist..... 272, 276
Parking
Brake and P (Park) Mechanism Check.... 329
Extended..... 209
Over Things That Burn..... 209
Parking Assist
Automatic..... 278
Parking or Backing
Assistance Systems..... 272
Passenger
Airbag Status Indicator..... 121
Compartment Air Filter..... 187
Infotainment..... 159
Sensing System..... 76
Pedestrian
Ahead Indicator..... 126
Perchlorate Materials Requirements,
California..... 309
Phone
Apple CarPlay and Android Auto..... 173
Bluetooth..... 167, 168
Port
USB..... 159
Post-Collision Braking..... 222
Power
Assist Steps..... 28
Door Locks..... 17
Mirrors..... 32
Outlets..... 113
Protection, Battery..... 150
Retained Accessory (RAP)..... 209
Seat Adjustment..... 44
Windows..... 37
Pregnancy, Using Seat Belts..... 69
Privacy
Vehicle Data Recording..... 417
Problems with Route Guidance..... 165
Program
Courtesy Transportation..... 413
Prohibited Fuels..... 304
Proposition 65 Warning
California..... 1
Publication Ordering Information..... 415

Q

Québec Consumer Protection Act Disclosure
(Québec Customers Only)..... 2

R

Radiator..... 320
Radio
AM-FM Radio..... 156
Frequency Statement..... 416
Reception..... 158
Satellite..... 157
Reading Lights..... 148
Rear
Axle..... 329
Camera Mirror..... 34
Climate Control System..... 185
Seat Reminder..... 51
Storage..... 103
Window Washer/Wiper..... 112
Rearview Mirrors
Automatic Dimming..... 34
Reclining Seatbacks..... 45
Recognition
Voice..... 166
Recommended
Fluids and Lubricants..... 400
Fuel..... 304
Recorder
Surround Vision..... 302
Records
Maintenance..... 401
Recreational Vehicle Towing..... 381

NOT FOR RESALE

Reimbursement Program, GM Mobility..... 411
Reminder
Headlights Off..... 145
Lights On..... 132
Seat Belt..... 119
Remote
Key..... 9
Key Operation..... 9
Start..... 14
Replacement
Glass..... 330
Replacement Parts
Airbags..... 81
Replacing
Airbag System..... 81
LATCH System Parts After a Crash..... 96
Seat Belt System Parts after a Crash..... 70
Reporting Safety Defects
Canadian Government..... 417
General Motors..... 417
U.S. Government..... 416
Retained Accessory Power (RAP)..... 209
Reverse Tilt Mirrors..... 34
Ride Control Systems
Air Suspension..... 228
Enhanced Traction System (ETS)..... 228
Magnetic..... 228
Roads
Driving, Wet..... 197
Roadside Assistance Program..... 411
Roof
Rack System..... 107
Sunroof..... 38
Rotation
Tires..... 358
Routing, Engine Drive Belt..... 405
Running Boards..... 28
Running the Vehicle While Parked..... 210

S

Safety
Locks..... 18
System Check..... 70
Safety Defects Reporting
Canadian Government..... 417
General Motors..... 417
U.S. Government..... 416
Satellite Radio..... 157
Scheduling Appointments..... 413
Seat Belts..... 62
Buckle To Drive..... 63
Care..... 70
Extender..... 69
How to Wear Seat Belts Properly..... 64
Lap-Shoulder Belt..... 66
Reminders..... 119
Replacing after a Crash..... 70
Use During Pregnancy..... 69
Seats
Head Restraints..... 42
Heated and Ventilated, Front..... 50
Heated and Ventilated, Rear..... 59
Lumbar Adjustment, Front..... 46
Massage..... 47
Memory..... 47
Power Adjustment, Front..... 44
Rear Seat Reminder..... 51
Reclining Seatbacks..... 45
Second Row..... 51
Third Row Seat..... 59
Secondary Collision Mitigation Braking..... 222
Securing Child Restraints..... 96, 98
Security
Light..... 131
OnStar..... 421
Vehicle..... 29
Vehicle Alarm..... 29
Service..... 188
Maintenance Records..... 401
Accessories and Modifications..... 309
Doing Your Own Work..... 309
Electric Parking Brake Light..... 124
Maintenance, General Information..... 394
Parts Identification..... 402
Scheduling Appointments..... 413
Services
Special Application..... 399

NOT FOR RESALE

Servicing the Airbag System..... 79
Settings..... 174
Signals, Turn and Lane-Change..... 147
Special Application Services..... 399
Specifications and Capacities..... 403
Speedometer..... 118
Start
Assist, Hill..... 222
Remote..... 14
Starting the Engine..... 206
Status
Vehicle..... 135
Steering..... 192
Hands-On Assist..... 242
Heated Wheel..... 110
Wheel Adjustment..... 110
Wheel Controls..... 154
Steps
Power Assist..... 28
Stop/Start System..... 206
Storage
Center Console..... 104
Compartments..... 102
Convenience Net..... 107
Cupholders..... 102
Glove Box..... 102
Rear..... 103
Roof Rack System..... 107
Struts
Gas..... 331
Stuck Vehicle..... 199
Sunroof..... 38
Sun Visors..... 38
Super Cruise..... 255
Light..... 132
Surround
Vision System..... 273
Symbols..... 3
Navigation..... 163
System
Brake Pad Life..... 326
Engine Air Filter Life..... 318
Global Positioning..... 165
Systems
Airbag..... 71
High Beam..... 144
Infotainment, Data Recording..... 419
Roof Rack..... 107

T

Tachometer..... 118
Teen Driver..... 177
Text Telephone (TTY) Users..... 410
Theft-Deterrent Systems..... 31
Tires..... 345
All-Season..... 346
Buying New Tires..... 359
Chains and Other Traction Devices..... 363
Changing..... 365
Designations..... 348
Different Size..... 361
Full-Size Spare..... 376
If a Tire Goes Flat..... 363
Inspection..... 357
Low-Profile..... 347
Pressure..... 350, 352
Pressure Light..... 129
Pressure Monitor Operation..... 354
Pressure Monitor System..... 353
Rotation..... 358
Sidewall Labeling..... 347
Terminology and Definitions..... 349
Uniform Tire Quality Grading..... 361
Wheel Alignment and Tire Balance..... 362
Wheel Replacement..... 362
When It Is Time for New Tires..... 359
Winter..... 346
Top Tier Fuel..... 303
Towing
General Information..... 306
Recreational Vehicle..... 381
Traction
Control System (TCS)/Electronic Stability Control Light..... 127
Control/Electronic Stability Control..... 223

NOT FOR RESALE

Limited-Slip Differential..... 228
Off Light..... 127
Trademarks and License Agreements..... 180
Traffic
Sign Assistant..... 298
Transfer Case
Four-Wheel Drive..... 215
Transmission
Automatic..... 210
Fluid, Automatic..... 318
Transportation Program, Courtesy..... 413
Transporting
a Disabled Vehicle..... 380
Trip Odometer..... 118
TTY Users
Customer Assistance..... 410
Turn and Lane-Change Signals..... 147

U

Uniform Tire Quality Grading..... 361
Universal Remote System
Operation..... 142
Programming..... 140
Updates
How Your Vehicle is Updated..... 427
Vehicle Update Additional
Information..... 427
USB Port..... 159
Using
Infotainment System..... 154
Navigation System..... 162

V

Vehicle
Ahead Indicator..... 126
Alarm System..... 29
Automatic Hold..... 222
Automatic Hold Light..... 125
Canadian Owners..... 2
Control..... 191
Data Recording and Privacy..... 417
Identification Number (VIN)..... 402
Load Limits..... 200
Messages..... 139
Positioning..... 165
Security..... 29
Speed Messages..... 139
Status..... 135
Symbols..... 3
Vehicle Care
Tire Pressure..... 350
Vehicle Security
Steering Column Lock..... 31
Vehicle Update
Additional Information..... 427
Ventilation, Air..... 186
Visors..... 38
Voice Recognition..... 166

W

Warning
Brake System Light..... 123
Caution and Danger..... 2
Hazard Flashers..... 146
Lights, Gauges, and Indicators..... 116
Warranty Information
California..... 408
Washer Fluid..... 324
Wheels
Alignment and Tire Balance..... 362
Different Size..... 361
Replacement..... 362
Where to Put the Restraint..... 87
Windows..... 37
Power..... 37
Windshield
Replacement..... 330
Wiper/Washer..... 110
Winter
Driving..... 198
Tires..... 346
Wiper
Blade Replacement..... 329
Rear Washer..... 112
Wireless Phone Charging..... 114

Scan to Access

United States

Canada

Owner's Manuals
Warranty Information
Reference Guides
Links to GM Brand Websites
Many Additional Resources

Connected Services
1-888-4-ONSTAR

85836477 A