CHEVROLET
2026
Express
Owner's Manual

Contents

Introduction 1
Keys, Doors, and Windows 6
Seats and Restraints 22
Storage 63
Instruments and Controls 65
Lighting 91
Infotainment System 97
Climate Controls 110
Driving and Operating 116
Vehicle Care 154
Service and Maintenance 225
Technical Data 232
Customer Information 236
Reporting Safety Defects 246
OnStar 250
Connected Services 255
Index 257

Introduction

California Proposition 65 Warning

WARNING

Operating, servicing and maintaining a passenger vehicle or off-highway motor vehicle can expose you to chemicals including engine exhaust, carbon monoxide, phthalates, and lead, which are known to the State of California to cause cancer and birth defects or other reproductive harm. To minimize exposure, avoid breathing exhaust, do not idle engine except as necessary, service your vehicle in a well-ventilated area and wear gloves or wash your hands frequently when servicing your vehicle. For more information go to www.P65Warnings.ca.gov/passenger-vehicle.

©2025 General Motors LLC. All Rights Reserved.

Introduction

The names, logos, emblems, slogans, vehicle model names, and vehicle body designs appearing in this manual including, but not limited to, GM, the GM logo, CHEVROLET, the CHEVROLET Emblem, and EXPRESS are trademarks and/or service marks of General Motors LLC, its subsidiaries, affiliates, or licensors.

For vehicles first sold in Canada, substitute the name "General Motors of Canada Company" for Chevrolet Motor Division wherever it appears in this manual.

This manual describes features that may or may not be on the vehicle because of optional equipment that was not purchased on the vehicle, model variants, country specifications, features/applications that may not be available in your region, or changes subsequent to this publication's release, including changes in standard or optional content.

Refer to the purchase documentation relating to your specific vehicle to confirm the features.

Canadian Vehicle Owners

You can obtain a copy of this guide in French from your dealer, at www.helminc.com, or from the following address:

Propriétaires Canadiens

On peut obtenir un exemplaire de ce guide en français auprès du concessionnaire ou à l'adresse suivante:

Helm, Incorporated
Attention: Customer Service
47911 Halyard Drive
Plymouth, MI 48170
USA

Using this Manual

To quickly locate information about the vehicle, use the Index in the back of the manual. It is an alphabetical list of what is in the manual and the page number where it can be found.

Danger, Warning, and Caution

Warning messages found on vehicle labels and in this manual describe hazards and what to do to avoid or reduce them.

⚠ Danger

Danger indicates a hazard with a high level of risk which will result in serious injury or death.

⚠ Warning

Warning indicates a hazard that could result in injury or death.

Caution

Caution indicates a hazard that could result in property or vehicle damage.

A circle with a slash through it is a safety symbol which means "Do not," "Do not do this," or "Do not let this happen."

Symbols

Some of the vehicle components and labels use symbols instead of text relating to a specific feature, control, message, gauge, or indicator.

Vehicle Symbol Chart

This chart defines the symbols that may be found on the vehicle.

: Air Conditioning System

: Air Conditioning Refrigerant Oil

: Airbag Readiness Light

: Antilock Brake System (ABS)

: Brake System Warning Light

: Dispose of Used Components Properly

: Do Not Apply High Pressure Water

: Engine Coolant Temperature

: Flame/Fire Prohibited

: Flammable

: Forward Collision Alert

: Fuse Block Cover Lock Location

: Fuses

: ISOFIX/LATCH System Child Restraints

: Keep Fuse Block Covers Properly Installed

: Lane Change Alert

: Lane Departure Warning

: Lane Keep Assist

: Malfunction Indicator Light

: Oil Pressure

: Park Assist

: Pedestrian Ahead Indicator

: Power

: Rear Cross Traffic Alert

: Registered Technician

: Remote Start

: Risk of Electrical Fire

: Seat Belt Reminders

: Side Blind Zone Alert

: Stop/Start

: Tire Pressure Monitor

: Traction Control/StabiliTrak/Electronic Stability Control (ESC)

: Under Pressure

: Vehicle Ahead Indicator

Additional Instructions or Information

The following symbols are used to indicate additional instructions or information.

: Shown when the owner's manual has additional instructions or information.

: Shown when the service manual has additional instructions or information.

: Shown when there is more information on another page — "see page."

Instrument Panel Overview

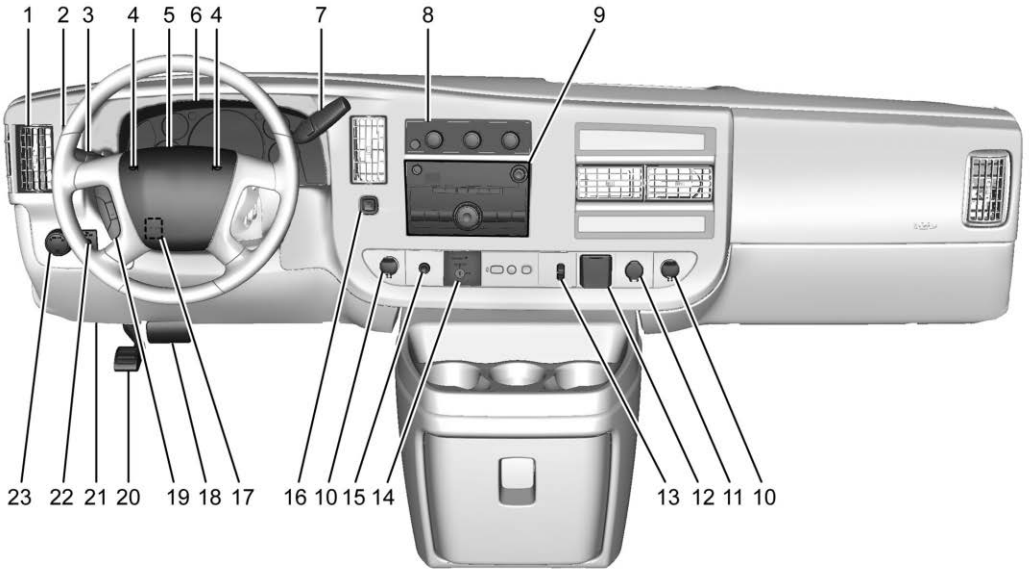

1. Air Vents. See *Air Vents* ⇨ *114*.

2. Driver Information Center Buttons (Out of View). See *Driver Information Center (DIC)* ⇨ *82*.

3. Turn Signal Lever. See *Turn and Lane-Change Signals* ⇨ *94*.

Windshield Wiper/Washer. See *Windshield Wiper/Washer* ➪ *66*.

4. Horn. See *Horn* ➪ *66*.
5. Hazard Warning Flashers. See *Hazard Warning Flashers* ➪ *93*.
6. Instrument Cluster. See *Instrument Cluster* ➪ *71*.
7. Shift Lever. See *Automatic Transmission* ➪ *132*.

   Manual Mode (If Equipped). See *Manual Mode* ➪ *136*.
8. Climate Control Systems. See *Climate Control Systems* ➪ *110*.
9. Infotainment Controls. See *Overview* ➪ *99*.
10. Power Outlets. See *Power Outlets* ➪ *68*.
11. USB Port (If Equipped). See *Auxiliary Devices* ➪ *104*.
12. Power Outlet 110/120 Volt Alternating Current. See *Power Outlets* ➪ *68*.
13. Rear Heating System (If Equipped). See *Rear Heating System* ➪ *111*.

    Lane Departure Warning (If Equipped). See *Lane Departure Warning (LDW)* ➪ *148*.

    Forward Collision Alert System (If Equipped). See *Forward Collision Alert (FCA) System* ➪ *145*.
14. Passenger Airbag On-Off Switch (If Equipped). See *Airbag On-Off Switch* ➪ *40*.
15. Traction Control/Electronic Stability Control. See *Traction Control/Electronic Stability Control* ➪ *139*.
16. Tow/Haul Mode Button (If Equipped). See *Tow/Haul Mode* ➪ *136*.
17. Steering Wheel Adjustment (Out of View) (If Equipped). See *Steering Wheel Adjustment* ➪ *65*.
18. Parking Brake Release. See *Parking Brake* ➪ *137*.
19. Cruise Control (If Equipped). See *Cruise Control* ➪ *140*.

    Fast Idle System (If Equipped). See *Fast Idle System* ➪ *129*.
20. Parking Brake. See *Parking Brake* ➪ *137*.
21. Data Link Connector (Out of View). See *Malfunction Indicator Light (Check Engine Light)* ➪ *77*.
22. Instrument Panel Illumination Control. See *Instrument Panel Illumination Control* ➪ *94*.

    Dome Light Override. See *Dome Lights* ➪ *94*.
23. Headlight Controls. See *Headlight Controls* ➪ *91*.

Keys, Doors, and Windows

Keys and Locks
Keys 6
Remote Keyless Entry (RKE) System 8
Remote Keyless Entry (RKE) System Operation 8
Remote Start 10
Door Locks 11
Power Door Locks 12
Cargo Door Relocking 12
Delayed Locking 12
Automatic Door Locks 12
Lockout Protection 12
Safety Locks 13

Doors
Side Door (60/40 Swing-Out) 13
Sliding Door 14
Rear Doors 15

Vehicle Security
Vehicle Security 15
Vehicle Alarm System 16
Immobilizer 16
Immobilizer Operation 17

Exterior Mirrors
Convex Mirrors 17
Manual Mirrors 18
Trailer-Tow Mirrors 18
Power Mirrors 18
Folding Mirrors 19
Heated Mirrors 19

Interior Mirrors
Interior Rearview Mirrors 19
Manual Rearview Mirror 19

Windows
Windows 19
Manual Windows 20
Power Windows 20
Swing-Out Windows 20
Enhanced Technology Glass 21
Rear Windows 21
Sun Visors 21

Keys and Locks

Keys

⚠ Warning

Leaving children in a vehicle with the ignition key is dangerous and children or others could be seriously injured or killed. They could operate the power windows or other controls or make the vehicle move. The windows will function with the keys in the ignition, and children or others could be caught in the path of a closing window. Do not leave children in a vehicle with the ignition key.

⚠ Warning

If the key is unintentionally rotated while the vehicle is running, the ignition could be moved out of the RUN position. This could be caused by heavy items hanging from the key ring, or by large or long items attached to the key ring that could be contacted by the driver or steering wheel. If the ignition moves out of the RUN position, the engine will shut off, braking and steering power assist may be impacted, and airbags may not deploy. To reduce the risk of unintentional rotation of the ignition key,

(Continued)

Warning (Continued)

do not change the way the ignition key and Remote Keyless Entry (RKE) transmitter, if equipped, are connected to the provided key rings.

The ignition key and key rings, and RKE transmitter, if equipped, are designed to work together as a system to reduce the risk of unintentionally moving the key out of the RUN position. The ignition key has a small hole to allow attachment of the provided key ring. It is important that any replacement ignition keys have a small hole. See your dealer if a replacement key is required.

The combination and size of the rings that came with your keys were specifically selected for your vehicle. The rings are connected to the key like two links of a chain to reduce the risk of unintentionally moving the key out of the RUN position. Do not add any additional items to the ring attached to the ignition key. Attach additional items only to the second ring, and limit added items to a few essential keys or small, light items no larger than an RKE transmitter.

Interference from radio-frequency identification (RFID) tags may prevent the key from starting the vehicle. Keep RFID tags away from the key when starting the vehicle.

The key is used for the ignition, and all locks.

See your dealer if a replacement key or additional key is needed.

If it becomes difficult to turn a key, inspect the key blade for debris. Periodically clean with a brush or pick.

If locked out of the vehicle, see *Roadside Assistance Program* ⇨ *241*.

With an active OnStar or connected service plan, an OnStar Advisor may remotely unlock the vehicle. See *OnStar Overview* ⇨ *250*.

Remote Keyless Entry (RKE) System

See *Radio Frequency Statement* ⇨ *246*.

If there is a decrease in the Remote Keyless Entry operating range:

- Check the distance. The transmitter may be too far from the vehicle.
- Check the location. Other vehicles or objects may be blocking the signal.
- Check the transmitter's battery. See "Battery Replacement" under *Remote Keyless Entry (RKE) System Operation* ⇨ *8*.
- If the transmitter is still not working correctly, see your dealer or a qualified technician for service.

Remote Keyless Entry (RKE) System Operation

If equipped, the Remote Keyless Entry transmitter functions work up to 60 m (197 ft) away from the vehicle.

Other conditions can affect the performance of the transmitter. See *Remote Keyless Entry (RKE) System* ⇨ *8*.

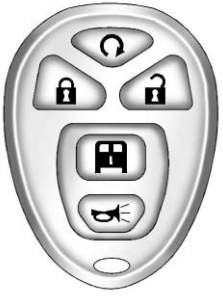

With Remote Start, Without Similar

: Press once to lock all doors. If enabled through the Driver Information Center, the parking lights flash once to indicate locking has occurred.

The horn may chirp when is pressed again within five seconds. To view available settings from the Driver Information Center, press to enter the feature settings menu.

: Press to unlock the driver door. If is pressed again within five seconds, all remaining doors unlock.

The interior lights come on and stay on for 20 seconds or until the ignition is turned on. If enabled through the Driver Information Center, the parking lights flash twice to indicate unlocking has occurred. To view available settings from the Driver Information Center, press to enter the feature settings menu.

: Press to unlock only the cargo doors.

: If equipped, press and then press and hold for at least four seconds or until the turn signal lights flash to start the engine from outside the vehicle using the Remote Keyless Entry transmitter. See *Remote Start* ⇨ *10*. To

view available settings from the Driver Information Center, press to enter the feature settings menu.

: Press and release to initiate vehicle locator. The turn signal lights flash and the horn sounds three times.

Press and hold for more than two seconds to sound the panic alarm. The turn signal lights flash and the horn sounds repeatedly for 30 seconds. The alarm turns off when the ignition is turned on or is pressed again. The ignition must be off for the panic alarm to work.

If equipped with an Remote Keyless Entry transmitter and OnStar, refer to "Theft Alarm Notification" in OnStar *Security* ⇨ *251*.

Programming Transmitters to the Vehicle

Only Remote Keyless Entry transmitters programmed to the vehicle will work. If a transmitter is lost or stolen, a replacement can be purchased and programmed through your dealer. When the replacement transmitter is programmed to the vehicle, all remaining transmitters must also be programmed. Any lost or stolen transmitters no longer work once the new transmitter is programmed. Each vehicle can have up to four transmitters programmed to it.

Battery Replacement

Warning

Never allow children to play with the RKE transmitter. The transmitter contains a small battery, which can be a choking hazard. If swallowed, internal burns can occur, resulting in severe injury or death. Seek medical attention immediately if a battery is swallowed.

Warning

To avoid personal injury, do not touch metal surfaces on the RKE transmitter when it has been exposed to extreme heat. These surfaces can be hot to the touch at temperatures above 59 °C (138 °F).

Caution

When replacing the battery, do not touch any of the circuitry on the transmitter. Static from your body could damage the transmitter.

Caution

Always replace the battery with the correct type. Replacing the battery with an incorrect type could potentially create a risk of battery explosion. Dispose of used batteries according to instructions and local laws. Do not attempt to burn, crush, or cut the used battery, and avoid exposing the battery to environments with extremely low air pressures or high temperatures.

Caution

If the RKE transmitter is not reassembled properly, liquids could enter the housing and damage the circuitry, resulting in an RKE transmitter malfunction and/or failure.

(Continued)

Caution (Continued)

To prevent damage, always follow the steps for RKE transmitter reassembly in this manual to ensure the transmitter is sealed properly whenever the RKE transmitter is opened.

Replace the battery if the Driver Information Center displays REPLACE BATTERY IN REMOTE KEY.

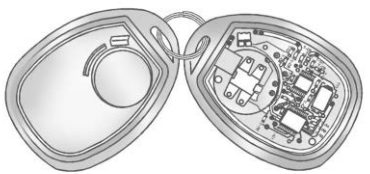

To replace the battery:

1. Separate the transmitter with a flat, thin object, such as a flat head screwdriver.
   - Carefully insert the tool into the notch located along the parting line of the transmitter. Do not insert the tool too far. Stop as soon as resistance is felt.
   - Twist the tool until the transmitter is separated.
2. Remove the old battery. Do not use a metal object.
3. Insert the new battery, positive side facing down. Replace with a CR2032 or equivalent battery.
4. Set transmitter button side down on a hard surface and press the other half straight down to force the halves together.

Remote Start

This vehicle may have a remote start feature. This feature allows you to start the engine from outside the vehicle. It may also start the vehicle's heating or air conditioning systems. See *Climate Control Systems* ⇨ *110*.

Laws in some local communities may restrict the use of remote starters. For example, some laws may require a person using remote start to have the vehicle in view when doing so. Check local regulations for any requirements on remote starting of vehicles.

Do not use the remote start feature if the vehicle is low on fuel. The vehicle may run out of fuel.

The Remote Keyless Entry transmitter range may be less while the vehicle is running.

Other conditions can affect the performance of the transmitter. See *Remote Keyless Entry (RKE) System* ⇨ *8*.

: This button will be on the Remote Keyless Entry transmitter if the vehicle has remote start.

To start the engine using the remote start feature:

1. Press and release on the transmitter.
2. Immediately press and hold until the turn signal lights flash. If you cannot see the lights, press and hold for at least four seconds.

   When the engine starts, the parking lights will turn on and remain on while the engine is running. The doors will be locked.

The engine will continue to run for 10 minutes. After 30 seconds, repeat the steps if a 10-minute extension is desired. Remote start can be extended only once.

After entering the vehicle during a remote start, turn the ignition on to drive the vehicle.

A maximum of two remote starts or a start with an extension are allowed between ignition cycles.

If the remote start procedure is used again before the first 10-minute time frame has ended, the first 10 minutes will immediately expire and the second 10-minute time frame will start.

After the engine has been remote started two times or a start with an extension, the ignition must be turned on and then off before the remote start procedure can be used again.

To cancel a remote start do any of the following:

- Press and hold until the parking lights turn off.
- Turn on the hazard warning flashers.
- Turn the ignition on and then off.

The remote vehicle start feature will not operate if:

- The key is in the ignition.
- The hood is open.
- The hazard warning flashers are on.
- There is an emission control system malfunction. See *Malfunction Indicator Light (Check Engine Light)* ⇨ *77*.
- The engine coolant temperature is too high.
- The oil pressure is low.
- The vehicle is not in park.
- Two remote starts or a start with an extension have already been provided.

To view available settings from the Driver Information Center press to enter the feature settings menu.

Door Locks

⚠ Warning

- Passengers, especially children, can easily open the doors and fall out of a moving vehicle. When a door is locked, the handle will not open it. The chance of being thrown out of the vehicle in a crash is increased if the doors are not locked. So, all passengers should wear seat belts properly and the doors should be locked whenever the vehicle is driven.
- Do not pull the door handles while the vehicle is in motion. The door may open with only a single pull. Always use safety locks when children are in the rear seats. See *Safety Locks* ⇨ *13*.
- Young children who get into unlocked vehicles may be unable to get out. A child can be overcome by extreme heat and can suffer permanent injuries or even death from heat stroke. Always lock the vehicle whenever leaving it.

(Continued)

Warning (Continued)

- Outsiders can easily enter through an unlocked door when you slow down or stop the vehicle. Locking the doors can help prevent this from happening.

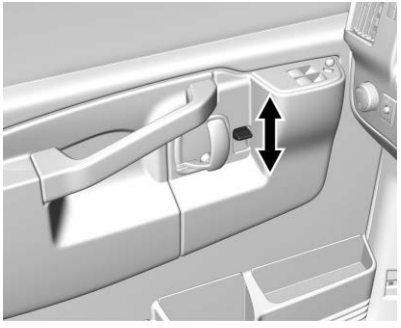

To lock the door from the inside, slide the manual lever on the door down. To unlock the door, slide the manual lever up.

From the outside, use the key.

If the vehicle is equipped with Keyless Entry, see *Remote Keyless Entry (RKE) System Operation* ⇨ *8*.

Power Door Locks

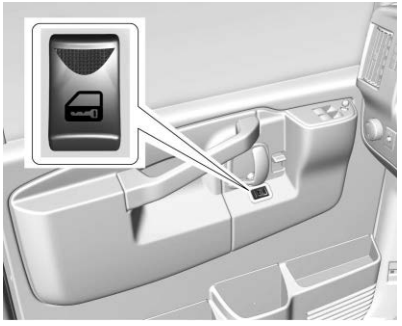

If equipped, press to lock or unlock the doors.

When a door is locked, the inside door handle will not work.

Cargo Door Relocking

If the cargo door is open when the lock button is pressed on the door or the RKE transmitter, all doors will lock except the cargo door. The cargo door will lock immediately when it is closed or when the delayed locking feature functions.

Delayed Locking

When locking the doors with the power lock switch and a door open, the doors will lock five seconds after the last door is closed. The horn chirps to signal that the delayed locking feature is in use.

Pressing or on the RKE transmitter will override the delayed locking feature and immediately lock all the doors.

This feature will not operate if the key is in the ignition.

To view available settings from the Driver Information Center (DIC) press to enter the feature settings menu.

Automatic Door Locks

The vehicle may have an automatic lock/unlock feature. To view available settings from the Driver Information Center (DIC) press to enter the feature settings menu.

Lockout Protection

This feature protects you from locking the key in the vehicle when the key is in the ignition and a door is open.

If the power lock switch is pressed when either the driver, passenger, or rear door is open, all the doors will lock and then the driver door will unlock. This feature does not include the side cargo door.

If the vehicle has an ambulance package, this feature is disabled.

Safety Locks

Security locks are located on the front portion of the 60/40 side swing-out door or the side sliding door.

60/40 Swing-Out Side Door — Passenger Side

For the 60/40 side swing-out door, move the button to the left for the passenger side door to engage the security feature.

Move the button to the right for the passenger side door to return the door locks to normal operation.

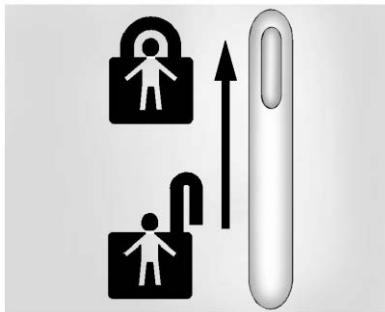

Side Sliding Door

For the side sliding door, move the button up to engage the security feature. Move the button down to return the door locks to normal operation.

Doors

Side Door (60/40 Swing-Out)

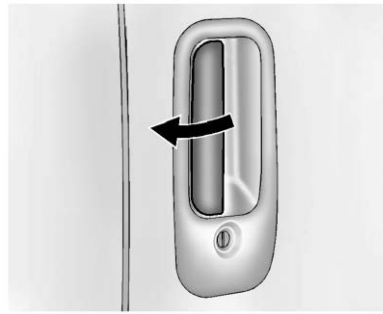

To open the front portion of a 60/40 door from the outside, pull out on the handle and open the door.

To open the front portion of a 60/40 door from the inside, pull the handle toward you and push the door open.

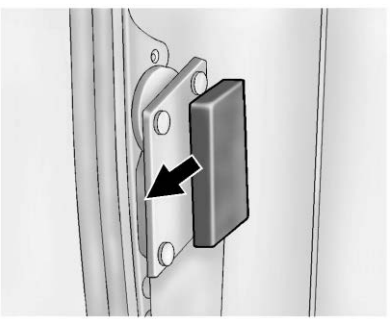

To open the rear portion of a 60/40 door from the outside, pull the handle on the side of the rear door and pull the door toward you.

To close the 60/40 side doors, close the rear door first. Then close the front door. Check to make sure that both doors are completely closed.

The swing-out doors have a check strap assembly in the door frame to keep the door from opening beyond 90 degrees.

To open the door beyond 90 degrees, close the door partially, pull the check strap toward you and then open the door. When the door is closed, the check strap will automatically re-engage.

Sliding Door

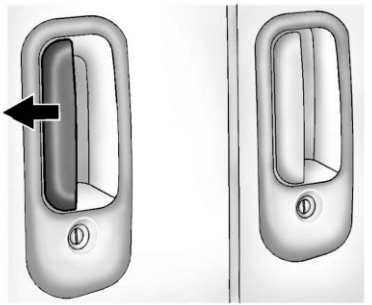

To open the sliding side door from the outside, pull the handle toward the rear of the vehicle and slide the door open.

To close the sliding side door from the outside, use the handle to slide the door toward the front of the vehicle.

When the door is closed, it will be flush with the side of the body.

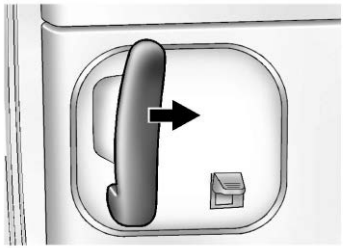

To open the sliding side door from the inside, pull the handle toward the rear of the vehicle. Then, slide the door toward the rear of the vehicle.

To close the sliding side door from the inside, grasp the handle and slide the door toward the front of the vehicle.

Make sure the door is completely closed before driving away.

Rear Doors

⚠ Warning

Unlocked doors can be dangerous.

- Passengers, especially children, can easily open the doors and fall out of a moving vehicle. The doors can be unlocked and opened while the vehicle is moving. The chance of being thrown out of the vehicle in a crash is increased if the doors are not locked. So, all passengers should wear seat belts properly and the doors should be locked whenever the vehicle is driven.
- Young children who get into unlocked vehicles may be unable to get out. A child can be overcome by extreme heat and can suffer permanent injuries or even death from heat stroke. Always lock the vehicle whenever leaving it.
- Outsiders can easily enter through an unlocked door when you slow down or stop the vehicle. Locking the doors can help prevent this from happening.

To open the rear doors from the outside, pull the handle toward you to open the passenger side rear door first.

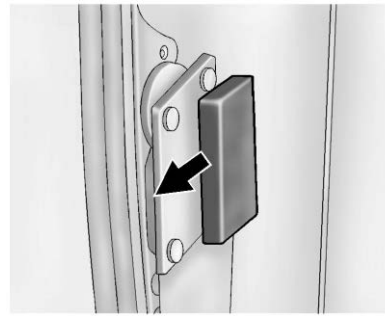

To open the driver side rear door, pull the latch release at the inside edge of the door.

To close the rear doors, close the driver side rear door first. Then close the passenger side rear door. Check to make sure both doors are completely closed.

Vehicle Security

This vehicle has theft-deterrent features, but is not theft-proof.

Vehicle Alarm System

This vehicle has an anti-theft alarm system.

Arming the Alarm System

1. Close the side door/rear doors and the hood. Turn off the vehicle.
2. Lock the vehicle in one of two ways:
   - Use the RKE transmitter.
   - With a door open, press the inside 🔒.
3. After 30 seconds the alarm system will arm. Pressing 🔒 on the RKE transmitter a second time will bypass the 30-second delay and immediately arm the alarm system.

The vehicle alarm system will not arm if the doors are locked with the key or the manual door lock.

The alarm will also be activated if a passenger door, side door, rear door, or the hood is opened without first disarming the system. When the alarm is activated, the lights flash and the horn sounds for about 30 seconds. The alarm system will then re-arm to monitor for the next unauthorized event.

Disarming the Alarm System

To disarm the alarm system or turn off the alarm if it has been activated:

- Press 🔓 on the RKE transmitter.
- Start the vehicle.

To avoid setting off the alarm by accident:

- Lock the vehicle after all occupants have left the vehicle and all doors are closed.
- Always unlock a door with the RKE transmitter.

Unlocking the driver door with the key will not disarm the system or turn off the alarm.

How to Detect a Tamper Condition

If 🔓 is pressed and the horn chirps and the lights flash three times, the alarm was activated while the alarm system was armed.

If the alarm system has been activated, and allowed to complete an event (approximately one minute), a message will appear on the Driver Information Center the next time the vehicle is started.

Theft Alarm Notification

To enable e-mail or text notification, see "Theft Alarm Notification" in OnStar *Security* ⇨ *251*.

Testing the Alarm

To test the alarm:

1. Lower the driver window and open the driver door.
2. Press 🔒 on the RKE transmitter.
3. Close the door and wait for a few seconds.
4. Reach in through the open window, unlock the door with the manual door lock, and open the door.

   This should set off the alarm.

   If the alarm does not sound when it should but the lights flash, check to see if the horn works. The horn fuse may be blown. To replace the fuse, see *Fuses and Circuit Breakers* ⇨ *180*.

Immobilizer

See *Radio Frequency Statement* ⇨ *246*.

Immobilizer Operation

This vehicle is equipped with the PASS-Key® III+ (Personalized Automotive Security System) theft-deterrent system. PASS-Key III+ is a passive theft deterrent system.

The system is automatically armed when the key is removed from the ignition.

You do not have to manually arm or disarm the system.

The security light will come on if there is a problem with arming or disarming the theft-deterrent system.

If the engine does not start and the security light comes on, the key may have a damaged transponder. Turn the ignition off and try again.

If the engine still does not start, and the key appears to be undamaged, try another ignition key. If the engine still does not start with the other key, the vehicle needs service. If the vehicle does start, the first key may be faulty. See your dealer or a locksmith who can service the PASS-Key III+ to have a new key made.

It is possible for the PASS-Key III+ decoder to learn the transponder value of a new or replacement key. Up to eight keys may be programmed for the vehicle. This procedure is for learning additional keys only. If all the currently programmed keys are lost or do not operate, you must see your dealer or a locksmith who can service PASS-Key III+ to have keys made and programmed to the system.

See your dealer or a locksmith who can service PASS-Key III+ to get a new key blank that is cut exactly as the ignition key that operates the system.

To program the new key:

1. Verify the new key has ⊕ stamped on it.
2. Insert the original, already programmed key into the ignition lock cylinder and start the engine. If the engine will not start, see your dealer for service.
3. After the engine has started, turn the ignition off and remove the key.
4. Insert the key to be programmed and turn the ignition on within 10 seconds of removing the previous key.

   The security message will turn off once the key has been programmed. It may not be apparent that the security message went on due to how quickly the key is programmed.
5. Repeat Steps 1–4 if additional keys are to be programmed.

If you lose or damage a PASS-Key III+ key, see your dealer or a locksmith who can service PASS-Key III+ to have a new key made.

Do not leave the key or device that disarms or deactivates the theft-deterrent system in the vehicle.

Exterior Mirrors

Convex Mirrors

⚠ Warning

A convex mirror can make things, like other vehicles, look farther away than they really are. If you cut too sharply into the next lane, you could hit a vehicle that is driving next to you. Check the inside mirror or glance over your shoulder before changing lanes.

If equipped, the lower portion of the driver and passenger side mirror is convex. A convex mirror's surface is curved so more can be seen from the driver seat. The convex mirror can be adjusted manually to the driver preferred position for better vision.

Manual Mirrors

Adjust the mirrors by moving the mirror up and down and left and right.

The mirrors can be manually folded in or out.

On the lower portion of each mirror is an auxiliary convex mirror. A convex mirror's surface is curved so you can see more from the driver seat. The auxiliary convex mirrors can be adjusted manually by moving the mirror.

Trailer-Tow Mirrors

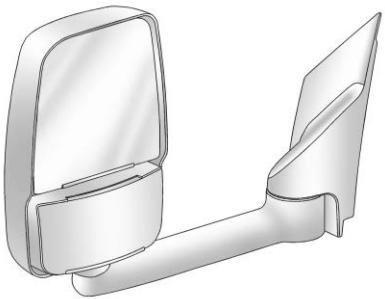

Vehicles with towing mirrors can be adjusted manually for a clear view of the objects behind you.

On the lower portion of each mirror there is an auxiliary convex mirror that can be adjusted manually to provide an extended field of view.

The mirrors can be manually folded in or out.

Power Mirrors

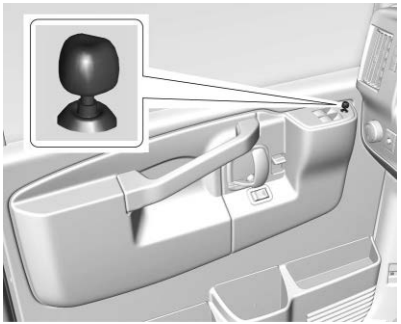

If equipped with power mirrors, select each mirror by turning the knob clockwise for the passenger side mirror or counterclockwise for the driver side mirror. The center position is neutral.

Adjust the mirror angle by moving the knob in the desired direction. The auxiliary convex mirrors can only be adjusted manually.

Folding Mirrors

Manual Folding Mirrors

The mirrors can be folded inward toward the vehicle to prevent damage when going through an automatic car wash. Push the mirror outward to return it to the original position.

Side Blind Zone Alert

The vehicle may have Side Blind Zone Alert. See *Side Blind Zone Alert (SBZA)* ⇨ *147*.

Heated Mirrors

For vehicles with heated mirrors:

: Press to heat the mirrors.

An indicator light in the button lights when the outside heated mirrors are activated.

See "Rear Window Defogger" under *Climate Control Systems* ⇨ *110*.

Interior Mirrors

Interior Rearview Mirrors

Adjust the rearview mirror for a clear view of the area behind the vehicle.

Do not spray glass cleaner directly on the mirror. Use a soft towel dampened with water.

Manual Rearview Mirror

Push the tab forward for daytime use and pull it rearward for nighttime use to avoid glare of the headlights from vehicles behind you.

Backup Video Manual Mirror

If equipped, this manual dimming mirror provides a camera view of the area behind the vehicle. The video display feature comes on when the vehicle is shifted in R (Reverse), and turns off when the vehicle is shifted out of R (Reverse).

Troubleshooting

If the vehicle is in R (Reverse) and a blue screen is displayed in the mirror and then the display shuts off, see your dealer for service.

See *Rear Vision Camera (RVC)* ⇨ *143*.

Windows

⚠ Warning

Never leave a child, a helpless adult, or a pet alone in a vehicle, especially with the windows closed in warm or hot weather. They can be overcome by the extreme heat and suffer permanent injuries or even death from heat stroke.

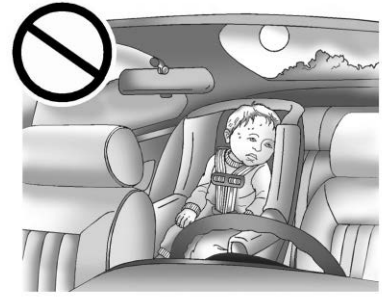

Manual Windows

Operate the manual windows by turning the hand crank on each door to raise or lower the side door windows.

Power Windows

Warning

Children could be seriously injured or killed if caught in the path of a closing window. Never leave keys in a vehicle with children. See *Keys* ⇨ *6*.

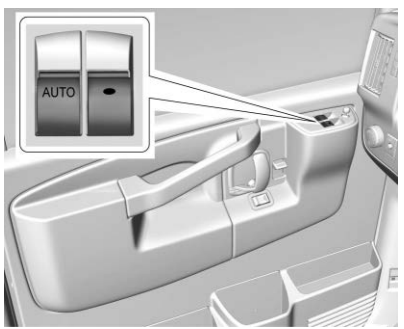

If equipped, power windows work when the ignition is on, in accessory mode, or when Retained Accessory Power (RAP) is active. See *Retained Accessory Power (RAP)* ⇨ *130*.

Using the window switch, press to open or pull to close the window.

The windows may be temporarily disabled if they are used repeatedly within a short time.

Express-Down

The driver window switch has an express-down feature that allows the window to be lowered without holding the switch. Press fully and release the switch marked AUTO to activate the express-down mode. This mode can be canceled at any time by pulling up on the switch. To open the window part way, lightly tap the switch until the window is at the desired position.

Swing-Out Windows

Side Swing-Out Window

To open the side door swing-out window, pull up on the latch at the edge of the window. Swing the window out and push down on the latch to lock the window into place.

To close the window, pull the latch toward you and push down on the latch to lock it.

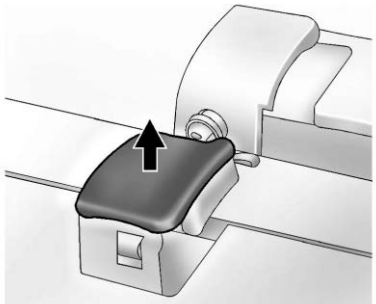

Rear Swing-Out Windows

The vehicle also has rear swing-out windows. The rear swing-out windows work the same way as the side swing-out window, but the latch is located at the bottom edge of the window.

Enhanced Technology Glass

The vehicle may be equipped with Enhanced Technology Glass (ETG). ETG is part of the overall occupant protection system on cargo vans with five seating positions and passenger vans. ETG may help keep passengers sitting next to these fixed windows from being ejected through the glass in some, but not all crashes. Even with this glass, seat belts must still be worn at all times.

Use only ETG glass approved for the vehicle for replacement when damaged. Cargo vans with five seating positions and passenger vans will have ETG glass in the rear-most side windows and laminated glass in the forward window of the sliding door, if equipped. Long wheelbase cargo vans that do not have five seating positions may also have ETG in the rear-most side windows.

Rear Windows

Rear Side Door Windows (Cargo Van Only)

⚠ Warning

The vehicle may have a partition behind the front seats or vertical metal panels on the inside of the rear side door windows. These are part of the occupant protection system. Do not remove them.

Sun Visors

The driver and passenger sun visors block direct sunlight and reduce glare. If equipped, detach and pivot from the center mount to the side window, or extend along the rod for better coverage.

Visor Vanity Mirror

The vehicle may have visor vanity mirrors, with or without lights. If equipped, lift the mirror cover to turn the lights on.

Seats and Restraints

Head Restraints
Head Restraints 22
Front Seats
Seat Adjustment 22
Power Seat Adjustment 23
Reclining Seatbacks 23
Rear Seats
Rear Seats (If Equipped) 24
Seat Belts
Seat Belts 27
How to Wear Seat Belts Properly 28
Lap-Shoulder Belt 30
Seat Belt Use During Pregnancy 32
Seat Belt Extender 32
Safety System Check 33
Seat Belt Care 33
Replacing Seat Belt System Parts After a Crash 33
Airbag System
Airbag System 34
Where Are the Airbags? 36
When Should an Airbag Inflate? 37
What Makes an Airbag Inflate? 38
How Does an Airbag Restrain? 38
What Will You See After an Airbag Inflates? 39
Airbag On-Off Switch 40
Servicing the Airbag-Equipped Vehicle 42
Adding Equipment to the Airbag-Equipped Vehicle 43
Airbag System Check 43
Replacing Airbag System Parts After a Crash 43
Child Restraints
Older Children 44
Infants and Young Children 45
Child Restraint Systems 47
Where to Put the Restraint 49
Lower Anchors and Tethers for Children (LATCH System) (If Equipped) 51
Replacing LATCH System Parts After a Crash (If Equipped) 57
Securing Child Restraints (With the Seat Belt in the Rear Seat (If Equipped)) 58
Securing Child Restraints (With the Seat Belt in the Front Seat) 60

Head Restraints

On vehicles with factory installed seats, the front seats have built-in head restraints that are not adjustable in the outboard seating positions.

Front Seats

Seat Adjustment

⚠ Warning

You can lose control of the vehicle if you try to adjust a driver seat while the vehicle is moving. Adjust the driver seat only when the vehicle is not moving.

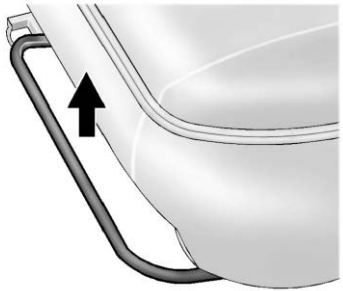

To adjust the seat:

1. Lift the bar under the front edge of the seat cushion to unlock the seat.
2. Slide the seat to the desired position and release the bar.
3. Try to move the seat back and forth to be sure the seat is locked in place.

Power Seat Adjustment

⚠ Warning

The power seats will work with the ignition off. Children could operate the power seats and be injured. Never leave children alone in the vehicle.

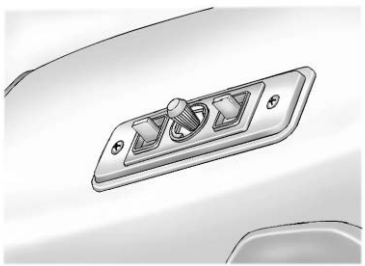

To adjust a power seat, if available, use the controls on the front of the seat:

- Move the center knob to the right or left to move the seat forward or rearward.
- Move the center knob up or down to raise or lower the seat.
- Move the right or left lever up or down to raise or lower the front or rear of the seat cushion.

Reclining Seatbacks

⚠ Warning

If either seatback is not locked, it could move forward in a sudden stop or crash. That could cause injury to the person sitting there. Always push and pull on the seatbacks to be sure they are locked.

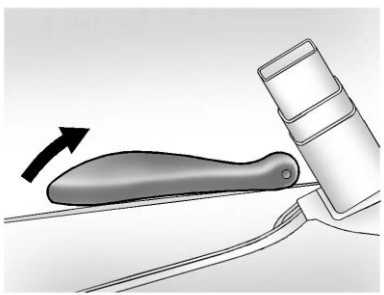

To recline the seatback:

1. Lift the lever on the inboard side of the seat.

2. Move the seatback to the desired position, and then release the lever to lock the seatback in place.
3. Push and pull on the seatback to make sure it is locked.

To return the seatback to the upright position:

1. Lift the lever fully without applying pressure to the seatback, and the seatback will return to the upright position.
2. Push and pull on the seatback to make sure it is locked.

⚠ Warning

Sitting in a reclined position when the vehicle is in motion can be dangerous. Even when buckled up, the seat belts cannot do their job.

The shoulder belt will not be against your body. Instead, it will be in front of you. In a crash, you could go into it, receiving neck or other injuries.

(Continued)

Warning (Continued)

The lap belt could go up over your abdomen. The belt forces would be there, not at your pelvic bones. This could cause serious internal injuries.

For proper protection when the vehicle is in motion, have the seatback upright. Then sit well back in the seat and wear the seat belt properly.

Do not have a seatback reclined if the vehicle is moving.

Rear Seats

Rear Seats (If Equipped)

Removing the Rear Seat

Disconnect the mini-latch plates for the lap-shoulder belts on the bench seat to be removed.

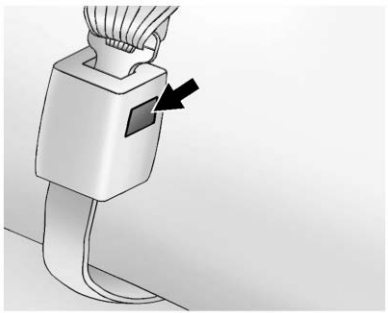

1. To do this, press the tip of a key into the release hole of the seat belt buckle while pulling up on the seat belt.
2. Locate the pins.

   On a three-passenger seat there are two pins on the inboard sides of the rear seats.

Carpet Floor Covering

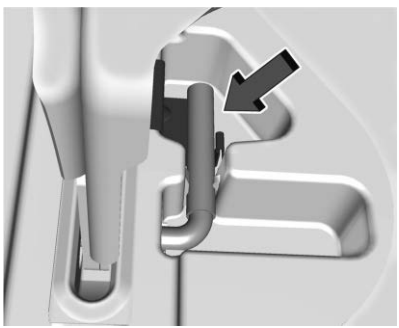

Vinyl Floor Covering

The pins have a black cap.

On a four-passenger seat, each half of the seat has a set of pins.

If the vehicle is equipped with a vinyl floor covering, the pins are under a flap that has been cut into the vinyl.

3. If equipped, release the pin from the lock ring by pushing down on the top of the ring and lifting the lock tab from the ring.
4. Pull the pin handle up to disengage the pin from the retaining clip, and then pull the pin out.
5. Repeat this procedure for the other pins.
6. Pull the seat rearward about 5 cm (2 in), and then lift the seat from the floor rails.
7. Remove the seat from the vehicle.

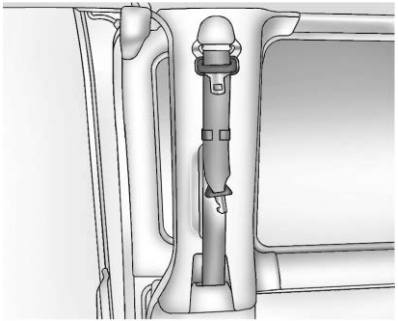

8. For the second and third row seats, stow the seat belt latch by attaching the clip on the seat belt latch to the trim just inside the side door.

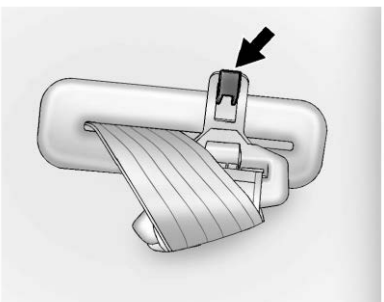

For the last row of seats, stow the seat belt latch plate on the clip at the window trim. Roll the mini-latch into the seat belt webbing and then hook the seat belt latch plate on the clip.

Reinstalling the Rear Seats

Warning

A seat that is not locked into place properly can move around in a collision or sudden stop. People in the vehicle could be injured. Be sure to lock the seat into place properly when installing it.

Warning

A seat belt that is improperly routed, not properly attached, or twisted will not provide the protection needed in a crash. The person wearing the belt could be seriously injured. After raising the rear seatback, always check to be sure that the seat belts are properly routed and attached, and are not twisted.

1. Position the seat into the open slots in both rails. Push the seat forward in the rail, hooking both seat bases onto the pins inside of the rails.
2. Locate the hole in the rail to install the locking pins at the rear of the seat base. If the vehicle is equipped with a vinyl floor covering, pull the flap that has been cut into the vinyl.
3. Insert the locking pins into the seat base and push the seat to line up the pins with the base.

Carpet Floor Covering

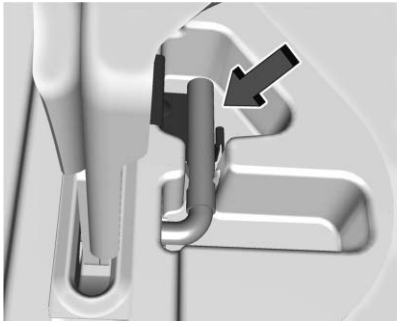

Vinyl Floor Covering

4. Push the pin(s) down until they are in the retaining clip. If equipped with a locking ring, ensure the ring is open, place the pin inside the ring, and secure the pin with the lock ring.
5. Pull on the pin to ensure the lock ring is closed.
6. If the vehicle is equipped with a vinyl floor covering, put the vinyl back to its original position.
7. Repeat this procedure for the other seat base.

8. Connect the mini-latch plates for the lap-shoulder belts by inserting the latch plates into the mini-buckles attached at the outboard positions of the bench seat. Do not twist the belts.
9. Check that all locking pins are locked into place before operating the vehicle.

Seat Belts

This section describes how to use seat belts properly, and some things not to do.

⚠ Warning

Do not let anyone ride where a seat belt cannot be worn properly. In a crash, if you or your passenger(s) are not wearing seat belts, injuries can be much worse than if you are wearing seat belts. You can be seriously injured or killed by hitting things inside the vehicle harder or by being ejected from the vehicle. In addition, anyone who is not buckled up can strike other passengers in the vehicle.

(Continued)

Warning (Continued)

It is extremely dangerous to ride in a cargo area, inside or outside of a vehicle. In a collision, passengers riding in these areas are more likely to be seriously injured or killed. Do not allow passengers to ride in any area of the vehicle that is not equipped with seats and seat belts.

Always wear a seat belt, and check that all passenger(s) are restrained properly too.

This vehicle has indicators as a reminder to buckle the seat belts. See *Seat Belt Reminders* ⇨ 75.

Why Seat Belts Work

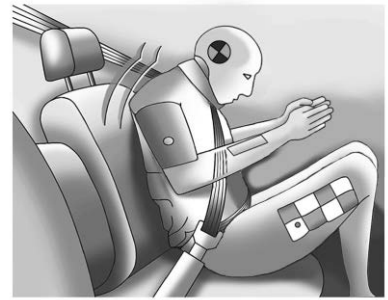

When riding in a vehicle, you travel as fast as the vehicle does. If the vehicle stops suddenly, you keep going until something stops you. It could be the windshield, the instrument panel, or the seat belts!

When you wear a seat belt, you and the vehicle slow down together. There is more time to stop because you stop over a longer distance, and when worn properly, your strongest bones take the forces from the seat belts. That is why wearing seat belts makes such good sense.

Questions and Answers About Seat Belts

Q: Will I be trapped in the vehicle after a crash if I am wearing a seat belt?

A: You *could* be — whether you are wearing a seat belt or not. Your chance of being conscious during and after a crash, so you *can* unbuckle and get out, is *much* greater if you are belted.

Q: If my vehicle has airbags, why should I have to wear seat belts?

A: Airbags are supplemental systems only. They work *with* seat belts — not instead of them. Whether or not an airbag is provided, all occupants still have to buckle up to get the most protection.

Also, in nearly all states and in all Canadian provinces, the law requires wearing seat belts.

How to Wear Seat Belts Properly

Follow these rules for everyone's protection.

There are additional things to know about seat belts and children, including smaller children and infants. If a child will be riding in the vehicle, see *Older Children* ➪ *44* or *Infants and Young Children* ➪ *45*. Review and follow the rules for children in addition to the following rules.

It is very important for all occupants to buckle up. Statistics show that unbelted people are hurt more often in crashes than those who are wearing seat belts.

There are important things to know about wearing a seat belt properly.

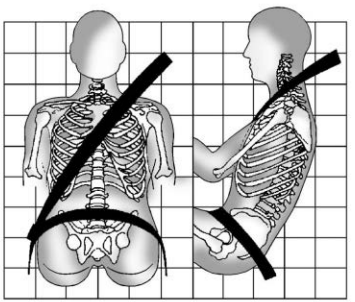

- Sit up straight and always keep your feet on the floor in front of you (if possible).
- Wear the lap part of the belt low and snug on the hips, just touching the thighs. In a crash, this applies force to the strong pelvic bones and you would be less likely to slide under the lap belt. If you slid under it, the belt would apply force on your abdomen. This could cause serious or even fatal injuries.
- Wear the shoulder belt over the shoulder and across the chest. These parts of the body are best able to take belt restraining forces. The shoulder belt locks if there is a sudden stop or crash.

⚠ Warning

You can be seriously injured, or even killed, by not wearing your seat belt properly.

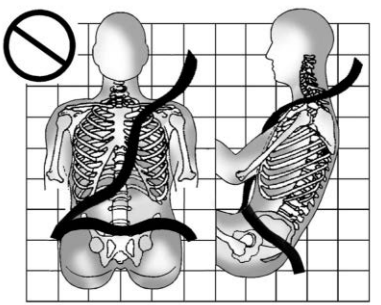

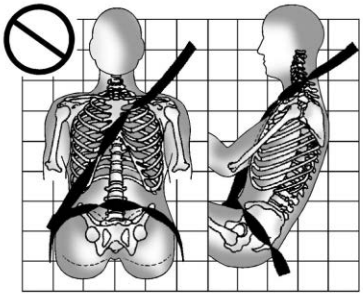

Never allow the lap or shoulder belt to become loose or twisted.

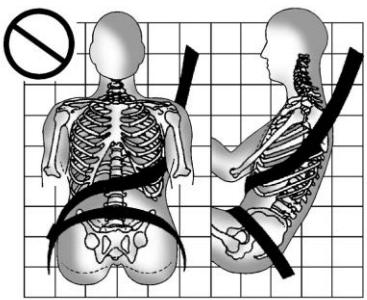

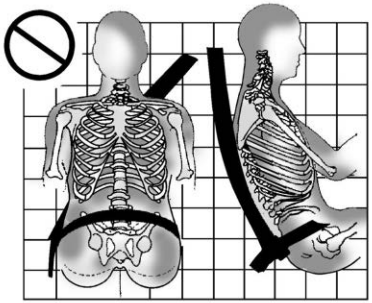

Never wear the shoulder belt under both arms or behind your back.

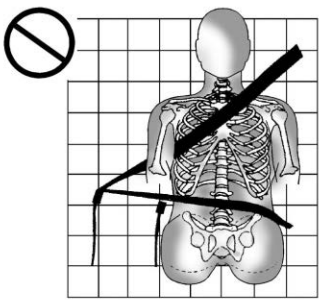

Always use the correct buckle for your seating position.

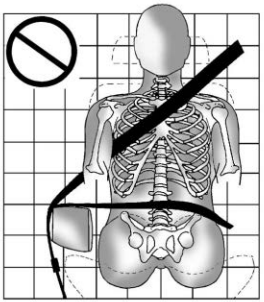

Never route the lap or shoulder belt over an armrest.

⚠ Warning

The seat belt can be pinched if it is routed under plastic trim on the seat, such as trim around the rear seatback folding handle or side airbag. In a crash, pinched seat belts might not provide adequate protection. Never allow seat belts to be routed under plastic trim pieces.

⚠ Warning

You can be seriously injured or killed if the shoulder belt is worn behind your back, under your legs, or wrapped around your neck. The shoulder belt can tighten but cannot be loosened if it is locked. The shoulder belt locks when it is pulled all the way out of the retractor. It unlocks when the shoulder belt is allowed to go all the way back into the retractor, but it cannot do this if it is wrapped around you. You may have to cut the seat belt if it is locked and tightened around you.

Lap-Shoulder Belt

All seating positions in the vehicle have a lap-shoulder belt. If you are using a rear seating position with a detachable seat belt and the seat belt is not attached, see "Reinstalling the Rear Seats" under *Rear Seats (If Equipped)* ➪ *24* for instructions on reconnecting the seat belt to the mini-buckle.

The following instructions explain how to wear a lap-shoulder belt properly.

1. Adjust the seat, if the seat is adjustable, so you can sit up straight. To see how, see "Seats" in the Index.
2. Pick up the latch plate and pull the belt across you. Do not let it get twisted.

   The lap-shoulder belt may lock if you pull the belt across you very quickly. If this happens, let the belt go back slightly to unlock it. Then pull the belt across you more slowly.

   If the shoulder portion of a passenger belt is pulled out all the way, the child restraint locking feature may be engaged. See *Child Restraint Systems* ➪ *47*. If this occurs, let the belt go back all the way and start again. If the locking feature stays engaged after letting the belt go back to stowed position on the seat, move the seat rearward or recline the seat until the shoulder belt retractor lock releases.

3. Push the latch plate into the buckle until it clicks.

   Pull up on the latch plate to make sure it is secure. If the belt is not long enough, see *Seat Belt Extender* ➪ *32*.

   Position the release pushbutton on the buckle so that the seat belt could be quickly unbuckled if necessary.
4. If equipped with a shoulder belt height adjuster, move it to the height that is right for you. See "Seat Belt Height Adjuster" later in this section for instructions on use and important safety information.

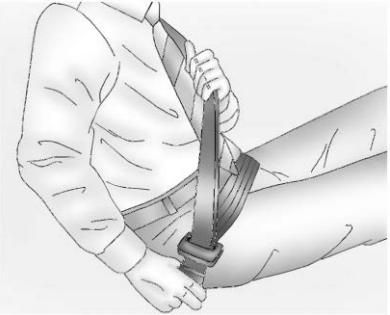

5. To make the lap part tight, pull up on the shoulder belt.

   It may be necessary to pull stitching on the seat belt through the latch plate to fully tighten the lap belt on smaller occupants.

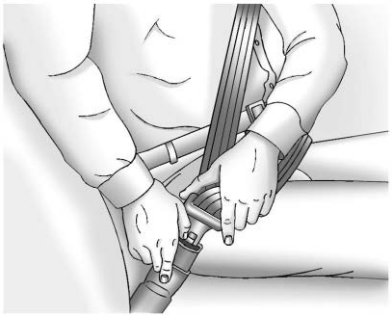

To unlatch the belt, push the release pushbutton on the buckle. The belt should return to its stowed position. Slide the latch plate up the seat belt webbing when the seat belt is not in use. The latch plate should rest on the stitching on the seat belt, near the guide loop on the side wall.

Always stow the seat belt slowly. If the seat belt webbing returns quickly to the stowed position, the retractor may lock and cannot be pulled out. If this happens, pull the seat belt straight out firmly to unlock the webbing, and then release it. If the webbing is still locked in the retractor, see your dealer.

Before a door is closed, be sure the seat belt is out of the way. If a door is slammed against a seat belt, damage can occur to both the seat belt and the vehicle.

Seat Belt Height Adjuster

The vehicle has a seat belt height adjuster for the driver and front outboard passenger positions.

Adjust the height so the shoulder portion of the belt is on the shoulder and not falling off of it. The belt should be close to, but not contacting, the neck. Improper shoulder belt height adjustment could reduce the effectiveness of the seat belt in a crash. See *How to Wear Seat Belts Properly* ⇨ *28*.

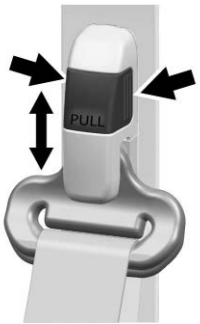

Squeeze both sides of the release button and pull outward. Then move the height adjuster up or down to the desired position and release the button.

After the adjuster is set to the desired position, try to move it up or down without squeezing the release button to make sure it has locked into position.

Seat Belt Pretensioners

If the vehicle has seat-mounted side impact airbags and roof-rail airbags, it also has seat belt pretensioners for the front outboard occupants.

Although the seat belt pretensioners cannot be seen, they are part of the seat belt assembly. They can help tighten the seat belts during the early stages of a moderate to severe frontal, near frontal, or rear crash if the threshold conditions for pretensioner activation are met. And, if the vehicle has roof-rail airbags, seat belt pretensioners can help tighten the seat belts in a side crash or a rollover event.

Pretensioners work only once. If the pretensioners activate in a crash, the pretensioners and probably other parts of the vehicle seat belt system will need to be replaced. See *Replacing Seat Belt System Parts After a Crash* ➪ *33*.

Do not sit on the outboard seat belt while entering or exiting the vehicle or at any time while sitting in the seat. Sitting on the seat belt can damage the webbing and hardware.

Rear Seat Belt Comfort Guides

Rear seat belt comfort guides may provide added seat belt comfort for older children who have outgrown booster seats and for some adults. When installed on a shoulder belt, the comfort guide positions the shoulder belt away from the neck and head.

Comfort guides are available through your dealer for the rear outboard seating positions. Instructions are included with the comfort guides.

Seat Belt Use During Pregnancy

Seat belts work for everyone, including pregnant women. Like all occupants, they are more likely to be seriously injured if they do not wear seat belts.

A pregnant woman should wear a lap-shoulder belt, and the lap portion should be worn as low as possible, below the rounding, throughout the pregnancy.

The best way to protect the fetus is to protect the mother. When a seat belt is worn properly, it is more likely that the fetus will not be hurt in a crash. For pregnant women, as for anyone, the key to making seat belts effective is wearing them properly.

Seat Belt Extender

If the vehicle seat belt will fasten around you, you should use it.

But if a seat belt is not long enough, your dealer will order you an extender. Only a GM issued extender should be used. When you go in to order it, take the heaviest coat you will wear, so the extender will be long enough for you. To help avoid personal injury, do not let someone else use it, and use it only for the seat it is made to fit. The extender has been designed for adults. Never use it for securing child restraints. For more information on the proper use and fit of seat belt extenders see the instruction sheet that comes with the extender.

Safety System Check

Periodically check the seat belt reminder, seat belts, buckles, latch plates, retractors, shoulder belt height adjusters (if equipped), and seat belt anchorages to make sure they are all in working order. Look for any other loose or damaged seat belt system parts that might keep a seat belt system from performing properly. See your dealer to have it repaired. Torn, frayed, or twisted seat belts may not protect you in a crash. Torn or frayed seat belts can rip apart under impact forces. If a belt is torn or frayed, have it replaced immediately. If a belt is twisted, it may be possible to untwist by reversing the latch plate on the webbing. If the twist cannot be corrected, ask your dealer to fix it.

Make sure the seat belt reminder light is working. See *Seat Belt Reminders* ➪ *75*.

Keep seat belts clean and dry. See *Seat Belt Care* ➪ *33*.

Seat Belt Care

Keep belts clean and dry.

Seat belts should be properly cared for and maintained.

Seat belt hardware should be kept dry and free of dust or debris. As necessary exterior hard surfaces and seat belt webbing may be lightly cleaned with mild soap and water. Ensure there is not excessive dust or debris in the mechanism. If dust or debris exists in the system after proper cleaning please see the dealer. Parts may need to be replaced to ensure proper functionality of the system.

⚠ Warning

Do not bleach or dye seat belt webbing. It may severely weaken the webbing. In a crash, they might not be able to provide adequate protection. Clean and rinse seat belt webbing only with mild soap and lukewarm water. Allow the webbing to dry.

Replacing Seat Belt System Parts After a Crash

⚠ Warning

A crash can damage the seat belt system in the vehicle. A damaged seat belt system may not properly protect the person using it, resulting in serious injury or even death in a crash. To help make sure the seat belt systems are working properly after a crash, have them inspected and any necessary replacements made as soon as possible.

After a minor crash, replacement of seat belts may not be necessary. But the seat belt assemblies that were used during any crash

may have been stressed or damaged. See your dealer to have the seat belt assemblies inspected or replaced.

New parts and repairs may be necessary even if the seat belt system was not being used at the time of the crash.

Have the seat belt pretensioners checked if the vehicle has been in a crash, or if the airbag readiness light stays on after you start the vehicle or while you are driving. See *Airbag Readiness Light* ⇨ *75*.

Airbag System

The vehicle has the following airbag:

- A frontal airbag for the driver

The vehicle may have the following airbags:

- A frontal airbag for the front outboard passenger
- A seat-mounted side impact airbag for the driver
- A seat-mounted side impact airbag for the front outboard passenger

  Seat-mounted side impact airbags are only available on vehicles equipped with roof-rail airbags.
- A roof-rail airbag for the driver on vans with single row seating
- A roof-rail airbag for the front outboard passenger on vans with single row seating
- A roof-rail airbag for the driver and the passenger seated directly behind the driver on vans with two row seating
- A roof-rail airbag for the front outboard passenger and the passenger seated directly behind the front outboard passenger on vans with two row seating

  If the van is equipped with a sliding door, the roof-rail airbag for the front outboard passenger is separate from the roof-rail airbag for the passenger seated directly behind the front outboard passenger. If the van is equipped with a 60/40 swing-out door, a single roof-rail airbag covers both seating positions.
- A roof-rail airbag for the driver and the second and third row passengers seated directly behind the driver on vans with three or more seating rows
- A roof-rail airbag for the front outboard passenger and the second and third row passengers seated directly behind the front outboard passenger on vans with three or more seating rows

  If the van is equipped with a sliding door, the roof-rail airbag for the front outboard passenger is separate from the roof-rail airbag for the second and third row passengers seated directly behind the front outboard passenger. If the van is equipped with a 60/40 swing-out door, a single roof-rail airbag covers all three seating positions.

Additionally:

- Vehicles that have a raised or modified roof — such as school buses, ambulances, vehicles with adaptive equipment for mobility, and recreational vehicles — may or may not be equipped with roof-rail airbags.
- Vehicles with a GVWR above 4 536 kg (10,000 lb) may be equipped with roof-rail airbags.

All vehicle airbags have the word AIRBAG on the trim or on an attached label near the deployment opening.

For frontal airbags, the word AIRBAG is on the center of the steering wheel for the driver and on the instrument panel for the front outboard passenger.

For seat-mounted side impact airbags, the word AIRBAG is on the side of the seatback or side of the seat closest to the door.

For roof-rail airbags, the word AIRBAG is on the ceiling or trim.

Airbags are designed to supplement the protection provided by seat belts. Even though today's airbags are also designed to help reduce the risk of injury from the force of an inflating airbag, all airbags must inflate very quickly to do their job.

Here are the most important things to know about the airbag system:

⚠ Warning

You can be severely injured or killed in a crash if you are not wearing your seat belt, even with airbags. Airbags are designed to work with seat belts, not replace them. Also, airbags are not designed to inflate in every

(Continued)

Warning (Continued)

crash. In some crashes seat belts are the only restraint. See *When Should an Airbag Inflate?* ⇨ *37*.

Wearing your seat belt during a crash helps reduce your chance of hitting things inside the vehicle or being ejected from it. Airbags are "supplemental restraints" to the seat belts. Everyone in the vehicle should wear a seat belt properly, whether or not there is an airbag for that person.

⚠ Warning

Because airbags inflate with great force and faster than the blink of an eye, anyone who is up against, or very close to, any airbag when it inflates can be seriously injured or killed. Do not sit unnecessarily close to any airbag, as you would be if sitting on the edge of the seat or leaning forward. Seat belts help keep you in position before and during a crash. Always wear a seat belt, even with airbags. The driver should sit as

(Continued)

Warning (Continued)

far back as possible while still maintaining control of the vehicle. The seat belts and the front outboard passenger airbags are most effective when you are sitting well back and upright in the seat with both feet on the floor.

Occupants should not lean on or sleep against the door or side windows in seating positions with seat-mounted side impact airbags and/or roof-rail airbags.

⚠ Warning

Children who are up against, or very close to, any airbag when it inflates can be seriously injured or killed. Always secure children properly in the vehicle. To read how, see *Older Children* ⇨ *44* or *Infants and Young Children* ⇨ *45*.

There is an airbag readiness light on the instrument panel, which shows the airbag symbol.

The system checks the airbag electrical system for malfunctions. The light tells you if there is an electrical problem. See *Airbag Readiness Light* ⇨ *75*.

Where Are the Airbags?

The driver frontal airbag is in the center of the steering wheel.

If the vehicle has a front outboard passenger frontal airbag, it is in the passenger side instrument panel.

Driver Side Shown, Passenger Side Similar

If the vehicle has seat-mounted side impact airbags for the driver and front outboard passenger, they are in the sides of the seatbacks closest to the door.

Driver Side Shown, Passenger Side Similar

If the vehicle has a single seating row and it has roof-rail airbags for the driver and front outboard passenger, the roof-rail airbags are in the ceiling above the side windows.

Driver Side Shown, Passenger Side Similar

If the vehicle has two seating rows, roof-rail airbags for the driver, front outboard passenger, and second row outboard passengers are in the ceiling above the side windows. If the vehicle has three or more seating rows, roof-rail airbags for the driver, front outboard passenger, and second and third row outboard passengers are in the ceiling above the side windows.

⚠ Warning

If something is between an occupant and an airbag, the airbag might not inflate properly or it might force the object into that person causing severe injury or even death. The path of an inflating airbag must be kept clear. Do not put anything between an occupant and an airbag, and do not attach or put anything on the steering wheel hub or on or near any other airbag covering.

Do not use seat accessories that block the inflation path of a seat-mounted side impact airbag.

Never secure anything to the roof of a vehicle with roof-rail airbags by routing a rope or tie-down through any door or window opening. If you do, the path of an inflating roof-rail airbag will be blocked.

When Should an Airbag Inflate?

This vehicle is equipped with one or more airbags. See *Airbag System* ➪ *34*. Airbags are designed to inflate if the impact exceeds the specific airbag system's deployment threshold. Deployment thresholds are used to

predict how severe a crash is likely to be in time for the airbags to inflate and help restrain the occupants. The vehicle has electronic sensors which help the airbag system determine the severity of the impact. Deployment thresholds can vary with specific vehicle design.

Frontal airbags are designed to inflate in moderate to severe frontal crashes to help reduce the potential for severe injuries mainly to the driver or front outboard passenger head and chest.

Whether the frontal airbags will or should deploy is not based primarily on how fast the vehicle is traveling. It depends largely on what you hit, the direction of the impact, and how quickly the vehicle slows down.

Frontal airbags may inflate at different crash speeds depending on whether the vehicle hits an object straight on or at an angle, and whether the object is fixed or moving, rigid or deformable, narrow or wide.

Frontal airbags are not intended to inflate during vehicle rollovers, rear impacts, or in many side impacts.

Seat-mounted side impact airbags are designed to inflate in moderate to severe side crashes depending on the location of the impact. These airbags may also inflate in some moderate to severe frontal impacts. Seat-mounted side impact airbags are not designed to inflate in rollovers or rear impacts. A seat-mounted side impact airbag is designed to inflate on the side of the vehicle that is struck.

The vehicle may or may not be equipped with roof-rail airbags. Roof-rail airbags are designed to inflate in moderate to severe side crashes depending on the location of the impact. In addition, these roof-rail airbags are designed to inflate during a rollover. Roof-rail airbags are not designed to inflate in frontal, near-frontal, or rear impacts. All roof-rail airbags will inflate when either side of the vehicle is struck or if the sensing system predicts that the vehicle is about to roll over on its side.

In any particular crash, no one can say whether an airbag should have inflated simply because of the vehicle damage or repair costs.

What Makes an Airbag Inflate?

In a deployment event, the sensing system sends an electrical signal triggering a release of gas from the inflator. Gas from the inflator fills the airbag causing the bag to break out of the cover. The inflator, the airbag, and related hardware are all part of the airbag module.

For airbag locations, see *Where Are the Airbags?* ➪ *36*.

How Does an Airbag Restrain?

In moderate to severe frontal collisions, even belted occupants can contact the steering wheel or the instrument panel. In moderate to severe side collisions, even belted occupants can contact the inside of the vehicle.

Airbags supplement the protection provided by seat belts by distributing the force of the impact more evenly over the occupant's body.

Rollover capable roof-rail airbags are designed to help contain the head and chest of occupants in the outboard seating positions in the first, second, and third rows, if equipped. The rollover capable roof-rail airbags are designed to help reduce the risk of full or partial ejection in rollover events, although no system can prevent all such ejections.

But airbags would not help in many types of collisions, primarily because the occupant's motion is not toward those airbags. See *When Should an Airbag Inflate?* ➪ *37*.

Airbags should never be regarded as anything more than a supplement to seat belts.

What Will You See After an Airbag Inflates?

After frontal and seat-mounted side impact airbags (if equipped) inflate, they quickly deflate, so quickly that some people may not even realize the airbags inflated. Roof-rail airbags (if equipped) may still be at least partially inflated for some time after they inflate. Some components of the airbag module may be hot for several minutes. For location of the airbags, see *Where Are the Airbags?* ➪ *36*.

The parts of the airbag that come into contact with you may be warm, but not too hot to touch. There may be some smoke and dust coming from the vents in the deflated airbags. Airbag inflation does not prevent people from leaving the vehicle.

⚠ Warning

When an airbag inflates, there may be dust in the air. This dust could cause breathing problems for people with a history of asthma or other breathing trouble. To avoid this, everyone in the vehicle should get

(Continued)

Warning (Continued)

out as soon as it is safe to do so. If you have breathing problems but cannot get out of the vehicle after an airbag inflates, then get fresh air by opening a window or a door. If you experience breathing problems following an airbag deployment, you should seek medical attention.

The vehicle has a feature that may automatically unlock the doors (if equipped with power door locks), turn on the interior lights and hazard warning flashers, and shut off the fuel system after the airbags inflate. The feature may also activate, without airbag inflation, after an event that exceeds a predetermined threshold. After turning the vehicle off and then on again, the fuel system will return to normal operation; the doors can be locked, the interior lights can be turned off, and the hazard warning flashers can be turned off using the controls for those features. If any of these systems are damaged in the crash they may not operate as normal.

⚠ Warning

A crash severe enough to inflate the airbags may have also damaged important functions in the vehicle, such as the fuel system, brake and steering systems, etc. Even if the vehicle appears to be drivable after a moderate crash, there may be concealed damage that could make it difficult to safely operate the vehicle.

Use caution if you should attempt to restart the engine after a crash has occurred.

In many crashes severe enough to inflate the airbag, windshields are broken by vehicle deformation. Additional windshield breakage may also occur from the front outboard passenger airbag.

- Airbags are designed to inflate only once. After an airbag inflates, you will need some new parts for the airbag system. If you do not get them, the airbag system will not be there to help protect you in another crash. A new system will include airbag modules and possibly other parts. The service manual for the vehicle covers the need to replace other parts.

- The vehicle has a crash sensing and diagnostic module which records information after a crash. See *Vehicle Data Recording and Privacy* ⇨ 247 and *Event Data Recorders* ⇨ 248.
- Let only qualified technicians work on the airbag systems. Improper service can mean that an airbag system will not work properly. See your dealer for service.

Airbag On-Off Switch

If the instrument panel has one of the switches pictured in the following illustrations, the vehicle has an airbag on-off switch that you can use to manually turn on or off the front outboard passenger airbag. No other airbag is affected by the airbag on-off switch.

United States

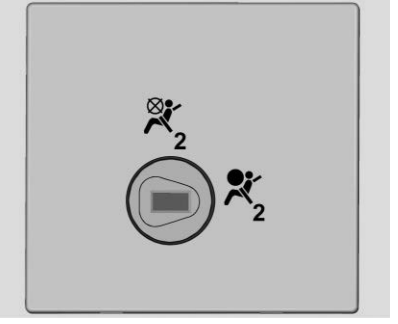

Canada

This switch should only be turned to the OFF position if the person in the front outboard passenger position is a member of a passenger risk group identified by the national government as follows:

Infant. An infant (less than 1 year old) must ride in the front seat because:

- *My vehicle has no rear seat;*
- *My vehicle has a rear seat too small to accommodate a rear-facing infant seat; or*
- *The infant has a medical condition which, according to the infant's physician, makes it necessary for the infant to ride in the front seat so that the driver can constantly monitor the child's condition.*

Child age 1 to 12. A child age 1 to 12 must ride in the front seat because:

- *My vehicle has no rear seat;*
- *Although children ages 1 to 12 ride in the rear seat(s) whenever possible, children ages 1 to 12 sometimes must ride in the front because no space is available in the rear seat(s) of my vehicle; or*

- *The child has a medical condition which, according to the child's physician, makes it necessary for the child to ride in the front seat so that the driver can constantly monitor the child's condition.*

Medical Condition. A passenger has a medical condition which, according to his or her physician:

- *Causes the passenger airbag to pose a special risk for the passenger; and*
- *Makes the potential harm from the passenger airbag in a crash greater than the potential harm from turning off the airbag and allowing the passenger, even if belted, to hit the instrument panel or windshield in a crash.*

⚠ Warning

If the front outboard passenger frontal airbag is turned off for a person who is not in a risk group identified by the national government, that person will not have the extra protection of an airbag. In a crash, the airbag will not be able to inflate and help protect the person sitting there. Do not turn

(Continued)

Warning (Continued)

off the front outboard passenger frontal airbag unless the person sitting there is in a risk group.

United States

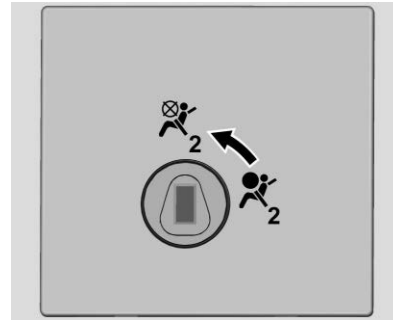

Canada

To turn off the front outboard passenger frontal airbag, insert the ignition key into the airbag on-off switch, push in, and move the switch to the OFF position.

The airbag off light will come on and stay on to let you know the front outboard passenger airbag is off. See *Airbag On-Off Light* ➪ *75*. The front outboard passenger airbag will remain off until you turn it back on again.

Warning

If the airbag readiness light ever comes on and stays on, it means that something may be wrong with the airbag system. For example, the front outboard passenger frontal airbag could inflate even though the airbag on-off switch is turned off.

To help avoid injury to yourself or others, have the vehicle serviced right away. See *Airbag Readiness Light* ⇨ *75* for more information, including important safety information.

United States

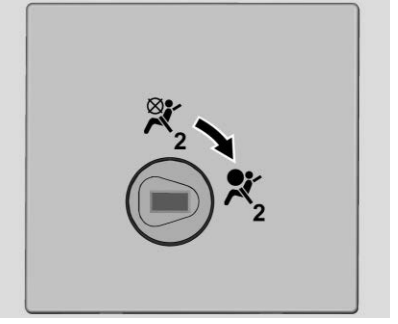

Canada

To turn the front outboard passenger airbag on again, insert the ignition key into the airbag on-off switch, push in, and move the switch to the ON position.

The front outboard passenger frontal airbag is now enabled, and may inflate. See *Airbag On-Off Light* ⇨ *75*.

Servicing the Airbag-Equipped Vehicle

Airbags affect how the vehicle should be serviced. There are parts of the airbag system in several places around the vehicle. Your dealer and the service manual have information about servicing the vehicle and the airbag system. To purchase a service manual, see *Publication Ordering Information* ⇨ *245*.

Warning

For up to 10 seconds after the vehicle is turned off and the battery is disconnected, an airbag can still inflate during improper service. You can be injured if you are close to an airbag when it inflates. Avoid yellow

(Continued)

Warning (Continued)

connectors. They are probably part of the airbag system. Be sure to follow proper service procedures, and make sure the person performing work for you is qualified to do so.

Adding Equipment to the Airbag-Equipped Vehicle

Adding accessories that change the vehicle's frame, bumper system, height, front end, or side sheet metal may keep the airbag system from working properly.

The operation of the airbag system can also be affected by changing, including improperly repairing or replacing, any parts of the following:

- Airbag system, including airbag modules, front or side impact sensors, sensing and diagnostic module, or airbag wiring
- Front seats, including stitching, seams or zippers
- Seat belts
- Steering wheel, instrument panel, ceiling trim, or pillar garnish trim
- Inner door seals, including speakers

Your dealer and the service manual have information about the location of the airbag modules and sensors, sensing and diagnostic module, and airbag wiring along with the proper replacement procedures.

If the vehicle has rollover roof-rail airbags, see *Different Size Tires and Wheels* ⇨ *200* for additional important information.

If the vehicle must be modified because you have a disability and have questions about whether the modifications will affect the vehicle's airbag system, or if you have questions about whether the airbag system will be affected if the vehicle is modified for any other reason, call Customer Assistance. See *Customer Assistance Offices* ⇨ *240*.

Airbag System Check

The airbag system does not need regularly scheduled maintenance or replacement. Make sure the airbag readiness light is working. See *Airbag Readiness Light* ⇨ *75*.

Caution

If an airbag covering is damaged, opened, or broken, the airbag may not work properly. Do not open or break the airbag coverings. If there are any opened or broken airbag coverings, have the airbag covering and/or airbag module replaced. For the location of the airbags, see *Where Are the Airbags?* ⇨ *36*. See your dealer for service.

Replacing Airbag System Parts After a Crash

⚠ Warning

A crash can damage the airbag systems in the vehicle. A damaged airbag system may not properly protect you and your passenger(s) in a crash, resulting in serious injury or even death. To help make sure the airbag systems are working properly after a crash, have them inspected and any necessary replacements made as soon as possible.

If an airbag inflates, you will need to replace airbag system parts. See your dealer for service.

If the airbag readiness light stays on after the vehicle is started or comes on when you are driving, the airbag system may not work properly. Have the vehicle serviced right away. See *Airbag Readiness Light* ⇨ *75*.

Child Restraints

Older Children

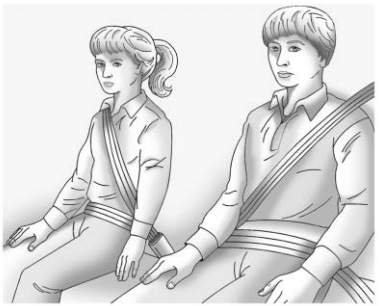

Older children who have outgrown booster seats should wear the vehicle seat belts. See *How to Wear Seat Belts Properly* ⇨ *28*.

The manufacturer instructions that come with the booster seat state the weight and height limitations for that booster. Use a booster seat with a lap-shoulder belt until the child passes the fit test below:

- Sit all the way back on the seat. Do the knees bend at the seat edge? If yes, continue. If no, return to the booster seat.
- Buckle the lap-shoulder belt. Does the shoulder belt rest on the shoulder? If yes, continue. If no, try using the rear seat belt comfort guide, if available. See "Rear Seat Belt Comfort Guides" under *Lap-Shoulder Belt* ⇨ *30*. If a comfort guide is not available, or if the shoulder belt still does not rest on the shoulder, then return to the booster seat.
- Does the lap belt fit low and snug on the hips, touching the thighs? If yes, continue. If no, return to the booster seat.
- Can proper seat belt fit be maintained for the length of the trip? If yes, continue. If no, return to the booster seat.

Q: What is the proper way to wear seat belts?

A: An older child should wear a lap-shoulder belt and get the additional restraint a shoulder belt can provide. The shoulder belt should not cross the face or neck. The lap belt should fit snugly below the hips, just touching the top of the thighs. This applies belt force to the child's pelvic bones in a crash. It should never be worn over the abdomen, which could cause severe or even fatal internal injuries in a crash.

Also see "Rear Seat Belt Comfort Guides" under *Lap-Shoulder Belt* ⇨ *30*.

According to accident statistics, children are safer when properly restrained in a rear seating position.

In a crash, children who are not buckled up can strike other people who are buckled up, or can be thrown out of the vehicle. Older children need to use seat belts properly.

⚠ Warning

Never allow more than one child to wear the same seat belt. The seat belt cannot properly spread the impact forces. In a crash, they can be crushed together and seriously injured. A seat belt must be used by only one person at a time.

⚠ Warning

Never allow a child to wear the seat belt shoulder belt under both arms or behind their back. A child can be seriously injured by not wearing the lap-shoulder belt properly. In a crash, the child would not be restrained by the shoulder belt. The child could move too far forward increasing the chance of head and neck injury. The child might also slide under the lap belt. The belt force would then be applied right on the abdomen. That could cause serious or fatal injuries. The shoulder belt should go over the shoulder and across the chest.

⚠ Warning

Children can be seriously injured or killed if the shoulder belt is worn behind their back, under their legs, or wrapped around their neck. The shoulder belt can tighten but cannot be loosened if it is locked. The shoulder belt locks when it is pulled all the way out of the retractor. It unlocks when the shoulder belt is allowed to go all the way back into the retractor, but it cannot do this if it is wrapped around the child. Never leave children unattended in a vehicle and never allow children to improperly wear, or play with, the seat belts.

Infants and Young Children

Everyone in a vehicle needs protection! This includes infants and all other children. Neither the distance traveled nor the age and size of the traveler changes the need, for everyone, to use safety restraints. In fact, the law in every state in the United States and in every Canadian province says children up to some age must be restrained while in a vehicle.

⚠ Warning

Children can be seriously injured or killed if the shoulder belt is worn behind their back, under their legs, or wrapped around their neck. The shoulder belt can tighten but cannot be loosened if it is locked. The shoulder belt locks when it is pulled all the way out of the retractor. It unlocks when the shoulder belt is allowed to go all the way back into the retractor, but it cannot do this if it is wrapped around the child. Never leave children unattended in a vehicle and never allow children to improperly wear, or play with, the seat belts.

Every time infants and young children ride in vehicles, they should have the protection provided by appropriate child restraints. Neither the vehicle seat belt system nor its airbag system is designed for them.

Children who are not restrained properly can strike other people, or can be thrown out of the vehicle.

⚠ Warning

Never hold an infant or a child while riding in a vehicle. Due to crash forces, an infant or a child will become so heavy it is not possible to hold it during a crash. For example, in a crash at only 40 km/h (25 mph), a 5.5 kg (12 lb) infant will suddenly become a 110 kg (240 lb) force on a person's arms. An infant or child should be secured in an appropriate child restraint.

⚠ Warning

Children who are up against, or very close to, any airbag when it inflates can be seriously injured or killed. Never put a rear-facing child restraint in the front outboard seat. Secure a rear-facing child restraint in a rear seat. It is also better to secure a forward-facing child restraint in a rear seat. If you must secure a forward-facing child restraint in the front outboard seat, always move the front passenger seat as far back as it will go.

Child restraints are devices used to restrain, seat, or position children in the vehicle and are sometimes called child seats or car seats.

There are three basic types of child restraints:

- Forward-facing child restraints
- Rear-facing child restraints
- Belt-positioning booster seats

The proper child restraint for your child depends on their size, weight, and age, and also on whether the child restraint is compatible with the vehicle in which it will be used.

For each type of child restraint, there are many different models available. When purchasing a child restraint, be sure it is designed to be used in a motor vehicle and is designed by a genuine child restraint manufacturer. If it is, the child restraint will have a label saying that it meets federal motor vehicle safety standards.

The instruction manual that is provided with the child restraint states the weight and height limitations for that particular child restraint. In addition, there are many kinds of child restraints available for children with special needs.

Warning

To reduce the risk of neck and head injury in a crash, infants and toddlers should be secured in a rear-facing child restraint until age two, or until they reach the maximum height and weight limits of their child restraint.

Warning

A young child's hip bones are still so small that the vehicle seat belt may not remain low on the hip bones, as it should. Instead, it may settle up around the child's abdomen. In a crash, the belt would apply force on a body area that is unprotected by any bony structure. This alone could cause serious or fatal injuries. To reduce the risk of serious or fatal injuries during a crash, young children should always be secured in an appropriate child restraint.

Child Restraint Systems

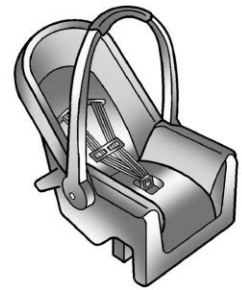

Rear-Facing Infant Restraint

A rear-facing child restraint provides restraint with the seating surface against the back of the infant.

The harness system holds the infant in place and, in a crash, acts to keep the infant positioned in the restraint.

Forward-Facing Child Restraint

A forward-facing child restraint provides restraint for the child's body with the harness.

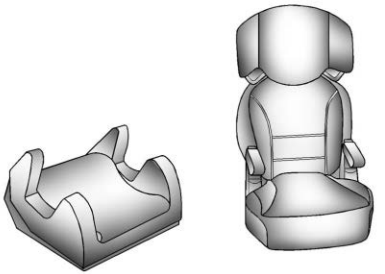

Booster Seats

A belt-positioning booster seat is used for children who have outgrown their forward-facing child restraint. Boosters are designed to improve the fit of the vehicle seat belt system until the child is large enough for the vehicle seat belts to fit properly without a booster seat. See the seat belt fit test in *Older Children* ⇨ *44*.

Backless Booster

Backless booster fitment requirement:

Some backless booster seats are not suitable for rear seats that have oversized side seat bolsters, as they can push the backless booster forward from the seat back.

To use a backless booster:

1. Center the booster on the seat cushion.
2. Ensure the backless booster seat contacts the seat back.

If the backless booster does not meet the fit test described in Steps 1–2, select another booster seat.

Securing an Add-On Child Restraint in the Vehicle

⚠ Warning

Each top-tether anchor is designed to anchor only one child restraint. Do not attach more than one child restraint to a single top-tether anchor. The anchor may come loose or break, potentially causing personal injury, property damage, or death.

⚠ Warning

A child can be seriously injured or killed in a crash if the child restraint is not properly secured in the vehicle. Secure the child restraint properly in the vehicle using the vehicle seat belt or LATCH system, following the instructions that came with that child restraint and the instructions in this manual.

To help reduce the chance of injury, the child restraint must be secured in the vehicle. Child restraints must be secured in vehicle seats by the lap belt portion of a lap-shoulder belt, or by the LATCH system. See *Lower Anchors and Tethers for Children (LATCH System) (If Equipped)* ⇨ *51* for more information. Never use a seat belt extender when installing a child restraint. Never use non-regulated aftermarket anchors or attachments to secure a child restraint. Children can be endangered in a crash if the child restraint is not properly secured in the vehicle.

When securing an add-on child restraint, see the following:

- Instruction labels provided on the child restraint
- Instruction manual provided with the child restraint
- This vehicle owner's manual

The child restraint instructions are important, so if they are not available, obtain a replacement copy from the manufacturer.

Keep in mind that an unsecured child restraint can move around in a collision or sudden stop and injure people in the vehicle. Be sure to properly secure any child restraint in the vehicle — even when no child is in it.

In some areas Certified Child Passenger Safety Technicians (CPSTs) are available to inspect and demonstrate how to correctly use and install child restraints. In the U.S., see the National Highway Traffic Safety Administration (NHTSA) website to locate the nearest child safety seat inspection station. For CPST availability in Canada, check with Transport Canada or the Provincial Ministry of Transportation office.

Securing the Child Within the Child Restraint

⚠ Warning

A child can be seriously injured or killed in a crash if the child is not properly secured in the child restraint. Secure the child properly following the instructions that came with that child restraint.

Where to Put the Restraint

According to accident statistics, children and infants are safer when properly restrained in an appropriate child restraint secured in a rear seating position.

Whenever possible, children aged 12 and under should be secured in a rear seating position.

If a child restraint is secured in the front outboard passenger seat, and the vehicle has a switch on the instrument panel to manually turn off the front outboard passenger airbag, see *Airbag On-Off Switch* ⇨ *40* and *Securing Child Restraints (With the Seat Belt in the Rear Seat (If Equipped))* ⇨ *58* *Securing Child Restraints (With the Seat Belt in the Front Seat)* ⇨ *60* for more information, including important safety information.

Never put a rear-facing child restraint in the front. This is because the risk to the rear-facing child is so great if the airbag deploys.

⚠ Warning

A child in a rear-facing child restraint can be seriously injured or killed if the front outboard passenger airbag inflates. This is because the back of the rear-facing child restraint would be very close to the inflating airbag. A child in a forward-facing child restraint can be seriously injured or killed if the front outboard passenger airbag inflates and the passenger seat is in a forward position.

(Continued)

Warning (Continued)

Even if the airbag switch has turned off the front outboard passenger frontal airbag, no system is fail-safe. No one can guarantee that an airbag will not deploy under some unusual circumstance, even though it is turned off.

Secure rear-facing child restraints in a rear seat, even if the airbag is off. If you secure a forward-facing child restraint in the front outboard passenger seat, always move the seat as far back as it will go. It is better to secure the child restraint in a rear seat.

When securing a child restraint with the seat belts in a rear seat position, study the instructions that came with the child restraint to make sure it is compatible with this vehicle.

Child restraints and booster seats vary considerably in size, and some may fit in certain seating positions better than others. Do not install a child restraint in any rear seating position where it cannot be installed securely.

Depending on where you place the child restraint and the size of the child restraint, you may not be able to access adjacent seat belts or LATCH anchors for additional passengers or child restraints. Adjacent seating positions should not be used if the child restraint prevents access to or interferes with the routing of the seat belt.

If the vehicle does not have a rear seat that will accommodate a rear-facing child restraint, a rear-facing child restraint should not be installed in the vehicle, even if the airbag is off.

Adjust the seat in front of a child restraint to ensure proper installation according to the child restraint manual. Move the front seat forward to avoid contact between the child restraint and the seat or any accessories mounted to the seat.

Wherever a child restraint is installed, be sure to follow the instructions that came with the child restraint and secure the child restraint properly.

Keep in mind that an unsecured child restraint can move around in a collision or sudden stop and injure people in the vehicle. Be sure to properly secure any child restraint in the vehicle — even when no child is in it.

Lower Anchors and Tethers for Children (LATCH System) (If Equipped)

The LATCH system secures a child restraint during driving or in a crash. LATCH attachments on the child restraint are used to attach the child restraint to the anchors in the vehicle. This system is designed to make installation of a child restraint easier.

In order to use the LATCH system in your vehicle, you need a child restraint that has LATCH attachments. LATCH-compatible rear-facing and forward-facing child seats can be properly installed using either the LATCH anchors or the vehicle's seat belts. Do not use both the seat belts and the LATCH anchorage system to secure a rear-facing or forward-facing child restraint.

Booster seats use the vehicle's seat belts to secure the child and the booster seat. If the manufacturer recommends that the booster seat be secured with the LATCH system, this can be done as long as the booster seat can be positioned properly and there is no interference with the proper positioning of the lap-shoulder belt on the child.

Make sure to follow the instructions that came with the child restraint, and also the instructions in this manual.

When installing a child restraint with a top tether, you must also use either the lower anchors or the seat belts to properly secure the child restraint. A child restraint must never be attached using only the top tether.

For a forward-facing five-point harness child restraint where the combined weight of the child and restraint are up to 29.5 kg (65 lb), use either the lower LATCH anchorages with the top tether anchorage, or the seat belt with the top tether anchorage. Where the combined weight of the child and restraint are greater than 29.5 kg (65 lb), use the seat belt with the top tether anchorage only.

Recommended Methods for Attaching Child Restraints

Restraint Type	**Combined Weight of the Child + Child Restraint**	**Use Only Approved Attachment Methods Shown with an X**			
		LATCH – Lower Anchors Only	**Seat Belt Only**	**LATCH** – Lower Anchors and Top Tether Anchor	**Seat Belt and Top Tether Anchor**
Rear-Facing Child Restraint	Up to 29.5 kg (65 lb)	**X**	**X**		
Rear-Facing Child Restraint	Greater than 29.5 kg (65 lb)		**X**		
Forward-Facing Child Restraint	Up to 29.5 kg (65 lb)			**X**	**X**
Forward-Facing Child Restraint	Greater than 29.5 kg (65 lb)				**X**

See *Securing Child Restraints (With the Seat Belt in the Rear Seat (If Equipped))* ➪ *58 Securing Child Restraints (With the Seat Belt in the Front Seat)* ➪ *60*.

Child restraints built after March 2014 are labeled with the maximum child weight, with which the LATCH system can be used for installing the child restraint.

The following explains how to attach a child restraint with these attachments in the vehicle.

Not all vehicle seating positions have lower anchors. In this case, the seat belt must be used (with top tether where available) to secure the child restraint. See *Securing Child*

Restraints (With the Seat Belt in the Rear Seat (If Equipped)) ⇨ *58 Securing Child Restraints (With the Seat Belt in the Front Seat)* ⇨ *60*.

Lower Anchors

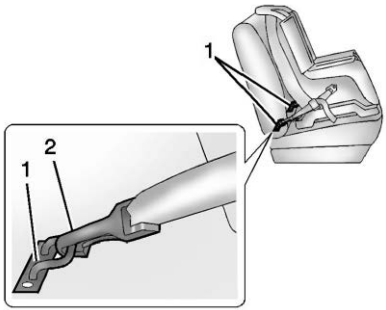

Lower anchors (1) are metal bars built into the vehicle. There are two lower anchors for each LATCH seating position that will accommodate a child restraint with lower attachments (2).

Top Tether Anchor

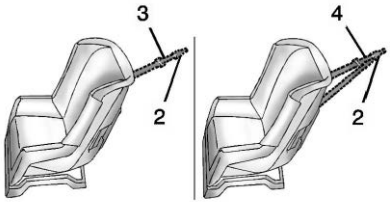

A top tether (3, 4) is used to secure the top of the child restraint to the vehicle. A top tether anchor is built into the vehicle. The top tether attachment hook (2) on the child restraint connects to the top tether anchor in the vehicle in order to reduce the forward movement and rotation of the child restraint during driving or in the event of a crash.

The child restraint may have a single tether (3) or a dual tether (4). Either will have a single attachment hook (2) to secure the top tether to the anchor.

Some child restraints with a top tether are designed for use with or without the top tether being attached. Others require the top tether always to be attached. In Canada, the law requires that forward-facing child restraints have a top tether, and that the tether be attached. Be sure to read and follow the instructions for your child restraint.

Lower Anchor and Top Tether Anchor Locations

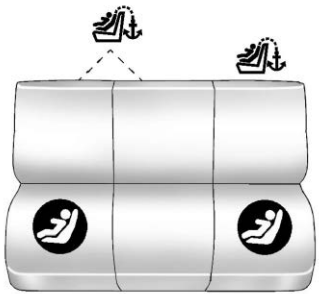

Second, Third, and Fourth Row with Three-Passenger Seat

: Seating positions with top tether anchors.

: Seating positions with two lower anchors.

See the information following for installing a child restraint with a top tether in the second, third, and fourth row center positions.

Never install two top tethers using the same top tether anchor.

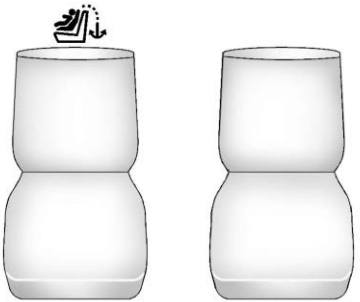

Front Passenger Position

: Seating positions with top tether anchors.

The second, third, and fourth row with three-passenger seats have exposed metal lower anchors in the crease between the seatback and the seat cushion.

Do not install a child restraint that requires lower anchors in the center rear seating position. See *Securing Child Restraints (With the Seat Belt in the Rear Seat (If Equipped))* ⇨ *58 Securing Child Restraints (With the Seat Belt in the Front Seat)* ⇨ *60*.

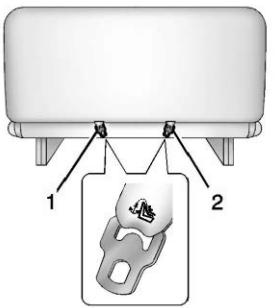

Second, Third, and Fourth Row with Three-Passenger Seat — Passenger Van

There are two top tether anchors in the second, third, and fourth row three-passenger seats. To install a child restraint in the rear driver-side seating positions, use anchor point (1). To install a child restraint in the rear passenger-side seating positions, use anchor point (2). To install a child restraint in the rear center seating positions, use anchor point (2). Never install two top tethers using the same top tether anchor.

If the vehicle is equipped with a four-passenger fourth or fifth row seat, it does not have upper or lower anchors. If a child restraint is placed in the four-passenger fourth or fifth row seat, it must be secured using the vehicle seat belts. See *Securing Child Restraints (With the Seat Belt in the Rear Seat (If Equipped))* ⇨ *58 Securing Child Restraints (With the Seat Belt in the Front Seat)* ⇨ *60*.

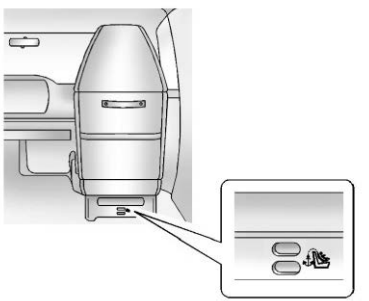

Front Passenger Position

There is a top tether anchor for the front passenger position with a front passenger seat. The anchor is at the rear of the seat cushion on the right front passenger seat.

Do not secure a child restraint in a position without a top tether anchor if a national or local law requires that the top tether be attached, or if the instructions that come with the child restraint say that the top tether must be attached.

According to accident statistics, children and infants are safer when properly restrained in a child restraint system or infant restraint system secured in a rear seating position. See *Where to Put the Restraint* ➪ *49* for additional information.

Securing a Child Restraint Designed for the LATCH System

⚠ Warning

A child could be seriously injured or killed in a crash if the child restraint is not properly attached to the vehicle using either the LATCH anchors or the vehicle

(Continued)

Warning (Continued)

seat belt. Follow the instructions that came with the child restraint and the instructions in this manual.

⚠ Warning

To reduce the risk of serious or fatal injuries during a crash, do not attach more than one child restraint to a single anchor. Attaching more than one child restraint to a single anchor could cause the anchor or attachment to come loose or even break during a crash. A child or others could be injured.

⚠ Warning

Children can be seriously injured or strangled if a shoulder belt is wrapped around their neck. The shoulder belt can tighten but cannot be loosened if it is locked. The shoulder belt locks when it is pulled all the way out of the retractor. It

(Continued)

Warning (Continued)

unlocks when the shoulder belt is allowed to go all the way back into the retractor, but it cannot do this if it is wrapped around a child's neck. If the shoulder belt is locked and tightened around a child's neck, the only way to loosen the belt is to cut it.

Buckle any unused seat belts behind the child restraint so children cannot reach them. Pull the shoulder belt all the way out of the retractor to set the lock, and tighten the belt behind the child restraint after the child restraint has been installed.

Caution

Do not let the LATCH attachments rub against the vehicle's seat belts. This may damage these parts. If necessary, move buckled seat belts to avoid rubbing the LATCH attachments.

Do not fold the rear seatback when the seat is occupied. Do not fold the empty rear seat with a seat belt buckled. This could damage

(Continued)

Caution (Continued)

the seat belt or the seat. Unbuckle and return the seat belt to its stowed position, before folding the seat.

If you need to secure more than one child restraint in the rear seat, see *Where to Put the Restraint* ⇨ *49*.

1. Attach and tighten the lower attachments to the lower anchors. If the child restraint does not have lower attachments or the desired seating position does not have lower anchors, secure the child restraint with the top tether and the seat belt. Refer to the child restraint manufacturer instructions and the instructions in this manual.
   - 1.1 Find the lower anchors for the desired seating position.
   - 1.2 Put the child restraint on the seat.
   - 1.3 Attach and tighten the lower attachments on the child restraint to the lower anchors.
2. If the child restraint manufacturer recommends that the top tether be attached, adjust the top tether to its full length and attach it to the anchor. Refer to the child restraint instructions and the following steps:
   - 2.1 Find the top tether anchor.
   - 2.2 For the second, third, and fourth row with three-passenger seats only, in the rear driver-side seating positions, use anchor point (1). For the rear passenger-side seating positions, use anchor point (2). For the center seating positions, use anchor point (2). Never install two top tethers using the same top tether anchor.
   - 2.3 Route and tighten the top tether according to your child restraint instructions and the following instructions:

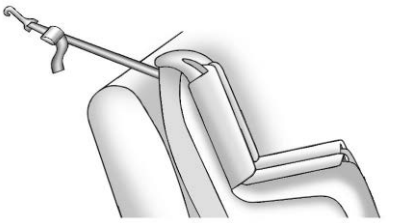

If the position you are using does not have a headrest or head restraint and you are using a single tether, route the tether over the seatback.

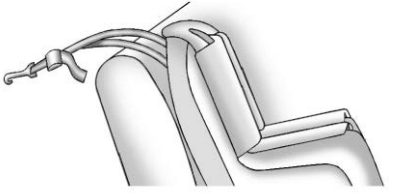

If the position you are using does not have a headrest or head restraint and you are using a dual tether, route the tether over the seatback.

If the position you are using has an integrated headrest or head restraint and you are using a dual tether, route the tether around the headrest or head restraint.

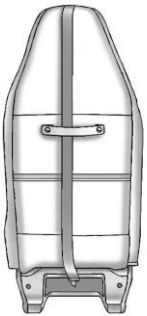

If the position you are using has an integrated headrest or head restraint and you are using a single tether, route the tether over the headrest or head restraint.

3. Before placing a child in the child restraint, make sure it is securely held in place. To check, firmly grip the child restraint at the LATCH path and attempt to move it side to side and back and forth. There should be no more than 2.5 cm (1 in) of movement for proper installation.

Replacing LATCH System Parts After a Crash (If Equipped)

⚠ Warning

A crash can damage the LATCH system in the vehicle. A damaged LATCH system may not properly secure the child restraint, resulting in serious injury or even death in a crash. To help make sure the LATCH system is working properly after a crash, see your dealer to have the system inspected and any necessary replacements made as soon as possible.

If the vehicle has the LATCH system and it was being used during a crash, new LATCH system parts may be needed.

New parts and repairs may be necessary even if the LATCH system was not being used at the time of the crash.

Securing Child Restraints (With the Seat Belt in the Rear Seat (If Equipped))

When securing a child restraint with the seat belts in a rear seat position, study the instructions that came with the child restraint to make sure it is compatible with this vehicle.

If the child restraint has the LATCH system, see *Lower Anchors and Tethers for Children (LATCH System) (If Equipped)* ⇨ *51* for how and where to install the child restraint using LATCH. If a child restraint is secured in the vehicle using a seat belt and it uses a top tether, see *Lower Anchors and Tethers for Children (LATCH System) (If Equipped)* ⇨ *51* for top tether anchor locations.

Do not secure a child seat in a position without a top tether anchor if a national or local law requires that the top tether be anchored, or if the instructions that come with the child restraint say that the top tether must be anchored. Refer to the instructions that came with the child restraint and see *Lower Anchors and Tethers for Children (LATCH System) (If Equipped)* ⇨ *51*.

In Canada, the law requires that forward-facing child restraints have a top tether, and that the tether be attached.

If the child restraint or vehicle seat position does not have the LATCH system, you will be using the seat belt to secure the child restraint. Be sure to follow the instructions that came with the child restraint.

If more than one child restraint needs to be installed in the rear seat, be sure to read *Where to Put the Restraint* ⇨ *49*.

1. Put the child restraint on the seat.
2. Pick up the latch plate and run the lap and shoulder portions of the vehicle seat belt through or around the child restraint. Ensure the seat belt webbing is routed as directly as possible and is not caught on seat handles or plastic trim. The child restraint instructions will show you how.

3. Push the latch plate into the buckle until it clicks.

   Position the release pushbutton on the buckle, away from the child restraint, so that the seat belt could be quickly unbuckled if necessary.

4. Pull the shoulder belt all the way out of the retractor to set the lock. When the retractor lock is set, the belt can be tightened but not pulled out of the retractor.

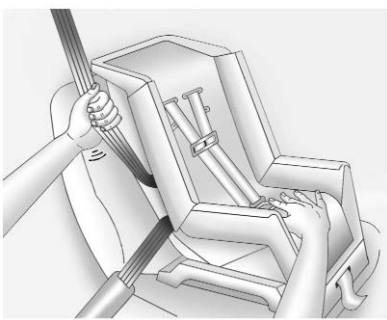

5. To tighten the belt, push down on the child restraint, pull the shoulder portion of the belt to tighten the lap portion of the belt, and feed the shoulder belt back into the retractor. When installing a forward-facing child restraint, it may be helpful to use your knee to push down on the child restraint as you tighten the belt.

   There must not be direct contact of the child restraint to the buckle release pushbutton. If there is contact, reposition the child restraint using the instructions that came with the child restraint. If there is still contact, use another seating position or child restraint.

   Try to pull the belt out of the retractor to make sure the retractor is locked. If the retractor is not locked, repeat Steps 4 and 5.

6. Tighten the top tether. See *Lower Anchors and Tethers for Children (LATCH System) (If Equipped)* ⇨ 51.

7. If the child restraint has a top tether, follow the child restraint manufacturer's instructions regarding the use of the top tether. See *Lower Anchors and Tethers for Children (LATCH System) (If Equipped)* ⇨ 51.

8. Before placing a child in the child restraint, make sure it is securely held in place. To check, firmly grip the child restraint at the seat belt path and attempt to move it side to side and back and forth. When the child restraint is properly installed, there should be no more than 2.5 cm (1 in) of movement.

To remove the child restraint, unbuckle the vehicle seat belt and let it return to the stowed position. If the top tether is attached to a top tether anchor, disconnect it.

Many child restraints are too wide to be correctly secured in the center rear seat, although some will fit there. If the center seat position is too narrow for the child restraint, secure it in a rear outboard seat position.

If a rear-facing child restraint is installed in the rear center seat, ensure that the second-row arm rest remains in the stowed (closed) position. If the arm rest cannot be stowed, install the child restraint in another seating position.

Securing Child Restraints (With the Seat Belt in the Front Seat)

This vehicle has airbags. A rear seat is a safer place to secure a forward-facing child restraint. See *Where to Put the Restraint* ➪ *49*.

There may be a switch on the instrument panel that you can use to turn off the front outboard passenger frontal airbag. See *Airbag On-Off Switch* ➪ *40* for more information, including important safety information.

Never put a rear-facing child restraint in the front. This is because the risk to the rear-facing child is so great if the airbag deploys.

⚠ Warning

A child in a rear-facing child restraint can be seriously injured or killed if the front outboard passenger airbag inflates. This is because the back of the rear-facing child restraint would be very close to the inflating airbag. A child in a forward-facing child restraint can be seriously injured

(Continued)

Warning (Continued)

or killed if the front outboard passenger airbag inflates and the passenger seat is in a forward position.

Even if the airbag switch has turned off the front outboard passenger frontal airbag, no system is fail-safe. No one can guarantee that an airbag will not deploy under some unusual circumstance, even though it is turned off.

Secure rear-facing child restraints in a rear seat, even if the airbag is off. If you secure a forward-facing child restraint in the front outboard passenger seat, always move the seat as far back as it will go. It is better to secure the child restraint in a rear seat.

⚠ Warning

If the airbag readiness light ever comes on and stays on, it means that something may be wrong with the airbag system. For example, the front outboard passenger frontal airbag could inflate even though the airbag on-off switch is turned off.

(Continued)

Warning (Continued)

To help avoid injury to yourself or others, have the vehicle serviced right away.

See *Airbag Readiness Light* ➪ *75* for more information, including important safety information.

If the vehicle does not have a rear seat that will accommodate a rear-facing child restraint, a rear-facing child restraint should not be installed in the vehicle, even if the airbag is off.

If the child restraint uses a top tether, see *Lower Anchors and Tethers for Children (LATCH System) (If Equipped)* ➪ *51* for top tether anchor locations.

Do not secure a child restraint in a position without a top tether anchor if a national or local law requires that the top tether be anchored, or if the instructions that come with the child restraint say that the top tether must be anchored.

In Canada, the law requires that forward-facing child restraints have a top tether, and that the tether be attached.

When using the lap-shoulder belt to secure the child restraint in this position, follow the instructions that came with the child restraint and the following instructions:

1. Move the seat as far back as it will go before securing the forward-facing child restraint. Move the seat upward or the seatback to an upright position, if needed, to get a tight installation of the child restraint.

   When the airbag off switch has turned off the front outboard passenger frontal airbag, the off indicator in the airbag off light should light and stay lit when you start the vehicle. See *Airbag On-Off Light* ⇨ *75*.

2. Put the child restraint on the seat.

3. Pick up the latch plate and run the lap and shoulder portions of the vehicle seat belt through or around the restraint. Ensure the seat belt webbing is routed as direct as possible and is not caught on seat handles or plastic trim. The child restraint instructions will show you how.

4. Push the latch plate into the buckle until it clicks.

   Position the release pushbutton on the buckle, away from the child restraint, so that the seat belt could be quickly unbuckled if necessary.

5. Pull the shoulder belt all the way out of the retractor to set the lock. When the retractor lock is set, the belt can be tightened but not pulled out of the retractor.

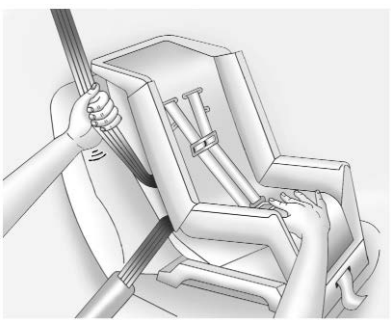

6. To tighten the belt, push down on the child restraint, pull the shoulder portion of the belt to tighten the lap portion of the belt, and feed the shoulder belt back into the retractor.

   When installing a forward-facing child restraint, it may be helpful to use your knee to push down on the child restraint as you tighten the belt.

   There must not be direct contact of the child restraint to the buckle release pushbutton. If there is contact, move the seat upward and repeat prior installation steps. If there is still contact, reposition the child restraint using the instructions that came with the child restraint. If there is still contact, use another seating position or child restraint.

   Try to pull the belt out of the retractor to make sure the retractor is locked. If the retractor is not locked, repeat Steps 5 and 6.

7. If the vehicle does not have a rear seat and the child restraint manufacturer recommends using a top tether anchor, attach the top tether to the top tether anchor. Refer to the instructions that came with the child restraint and to *Lower Anchors and Tethers for Children (LATCH System) (If Equipped)* ➪ *51*.

8. Before placing a child in the child restraint, make sure it is securely held in place. To check, firmly grip the child restraint at the seat belt path and attempt to move it side to side and back and forth. When the child restraint is properly installed, there should be no more than 2.5 cm (1 in) of movement.

To remove the child restraint, unbuckle the vehicle seat belt and let it return to the stowed position. If the top tether is attached to a top tether anchor, disconnect it.

If you turned the airbag off with the switch, turn on the front outboard passenger airbag when you remove the child restraint from the vehicle unless the person who will be sitting there is a member of a passenger airbag risk group. See *Airbag On-Off Switch* ➪ *40* for more information, including important safety information.

Storage

Storage Compartments
Storage Compartments 63
Front Storage 63
Additional Storage Features
Cargo Tie-Downs 63

Storage Compartments

⚠ Warning

Do not store heavy or sharp objects in storage compartments. In a crash, these objects may cause the cover to open and could result in injury.

Front Storage

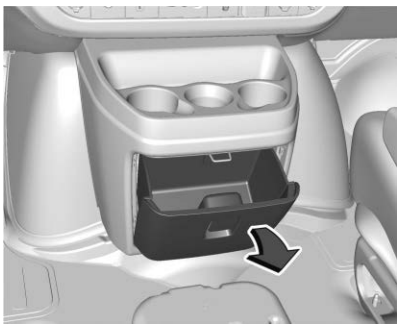

If equipped, the front storage compartment is at the center of the instrument panel extension near the floor. To open, pull up on the latch.

There may also be storage compartments on the inside of each front door.

Additional Storage Features

Cargo Tie-Downs

⚠ Warning

The child restraint top tether strap may be damaged by contact with items in the cargo area. Your child could be seriously injured or killed in a collision if the top tether strap is damaged. Properly secure all cargo.

⚠ Warning

Properly secure all cargo with ropes or straps to help prevent it from sliding or shifting. Do not place cargo higher than the seatbacks. In a sudden stop or collision, unsecured cargo could cause personal injury. Use suitable ropes or straps to secure cargo.

⚠ Warning

Never allow anyone to ride in the cargo area. It is extremely dangerous to ride in the cargo area of a vehicle. In a collision, people riding in these areas are more likely to be seriously injured or killed.

Do not allow people to ride in any area of the vehicle that is not equipped with seats and seat belts. Be sure everyone in the vehicle is in a seat and using a seat belt properly.

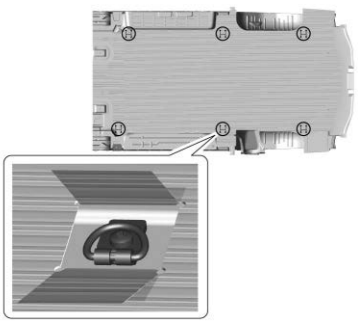

If equipped, there are six cargo tie-downs in the cargo area that can be used to secure cargo.

Do not apply a total load of more than 5 000 N (1,124 lbs of force) to a single cargo tie-down when securing cargo.

See *Vehicle Load Limits* ➪ *123*.

Instruments and Controls

Controls
Steering Wheel Adjustment 65
Horn 66
Windshield Wiper/Washer 66
Compass 66
Clock 68
Power Outlets 68
Cigarette Lighter 69
Ashtrays 70

Warning Lights, Gauges, and Indicators
Warning Lights, Gauges, and Indicators ... 70
Instrument Cluster 71
Speedometer 71
Odometer 71
Trip Odometer 71
Fuel Gauge 72
Engine Oil Pressure Gauge 73
Engine Coolant Temperature Gauge 74
Voltmeter Gauge 74
Seat Belt Reminders 75
Airbag Readiness Light 75
Airbag On-Off Light 75
Charging System Light 76
Malfunction Indicator Light (Check Engine Light) 77
Brake System Warning Light 78
Antilock Brake System (ABS) Warning Light 79
Tow/Haul Mode Light 79
Lane Departure Warning (LDW) Light 79
Vehicle Ahead Indicator 79
Traction Control System (TCS)/ Electronic Stability Control Light 80
Electronic Stability Control (ESC) Off Light 80
Tire Pressure Light 80
Engine Oil Pressure Light 81
Low Fuel Warning Light 81
Security Light 82
High-Beam On Light 82
Cruise Control Light 82

Information Displays
Driver Information Center (DIC) 82

Vehicle Messages
Vehicle Messages 86
Engine Power Messages 86
Vehicle Speed Messages 87

Vehicle Personalization
Vehicle Personalization 87

Controls

Steering Wheel Adjustment

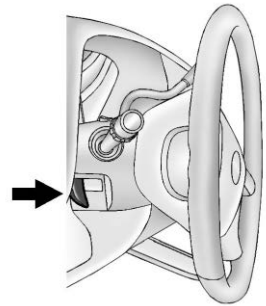

For vehicles with a tilt steering wheel, the lever is located on the left side of the steering column.

To adjust the steering wheel:

1. Pull the lever to move the steering wheel up or down into a comfortable position.
2. Release the lever to lock the steering wheel in place.

Do not adjust the steering wheel while driving.

Horn

Press on the steering wheel pad to sound the horn.

Windshield Wiper/Washer

Warning

In freezing weather, do not use the washer until the windshield is warmed. Otherwise the washer fluid can form ice on the windshield, blocking your vision.

Warning

Before driving the vehicle, always clear snow and ice from the hood, windshield, washer nozzles, roof, and rear of the vehicle, including all lights and windows. Reduced visibility from snow and ice buildup could lead to a crash.

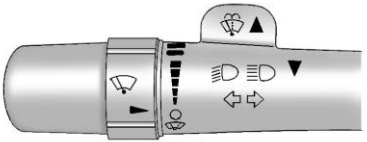

The lever is on the left side of the steering column.

Turn the band with on it to select the wiper speed.

: Use for a single wipe. Hold the band on , then release. For several wipes, hold the band on longer.

: Use to adjust the delay time between wipes. Turn the band up for more frequent wipes or down for less frequent wipes.

: Fast wipes.

: Slow wipes.

: Use to turn the wipers off.

When driving during the day and the wipers are activated, the headlights automatically turn on after completing eight wipe cycles.

Clear ice and snow from the wiper blades before using them. If frozen to the windshield, carefully loosen or thaw them. Damaged blades should be replaced. See *Wiper Blade Replacement* ⇨ *176*.

Windshield Washer

The windshield wiper paddle is on top of the turn signal lever.

: Push the paddle to spray washer fluid on the windshield. The wipers will clear the window and then either stop or return to the preset speed.

See *Washer Fluid* ⇨ *170*.

Compass

This vehicle may have a compass in the Driver Information Center (DIC).

Compass Zone

Your dealer will set the correct zone for your location.

Under certain circumstances, such as during a long distance cross-country trip or moving to a new state or province, it will be necessary to

compensate for compass variance by resetting the zone through the DIC if the zone is not set correctly.

Compass variance is the difference between the earth's magnetic north and true geographic north. If the compass is not set to the zone where you live, the compass may give false readings. The compass must be set to the variance zone in which the vehicle is traveling.

To adjust for compass variance, use the following procedure:

Compass Variance (Zone) Procedure

1. Do not set the compass zone when the vehicle is moving. Only set it when the vehicle is in P (Park).

   Press until PRESS ✓ TO CHANGE COMPASS ZONE displays.

2. Find the vehicle's current location and variance zone number on the map.

   Zones 1 through 15 are available.

3. Press ✓ to scroll through and select the appropriate variance zone.

4. Press until the vehicle heading, for example, N for North, is displayed in the DIC.

5. If calibration is necessary, calibrate the compass. See “Compass Calibration Procedure” following.

Compass Calibration

The compass can be manually calibrated. Only calibrate the compass in a magnetically clean and safe location, such as an open parking lot, where driving the vehicle in circles is not a danger. It is suggested to calibrate away from tall buildings, utility wires, manhole covers, or other industrial structures, if possible.

If CAL should ever appear in the DIC display, the compass should be calibrated.

If the DIC display does not show a heading, for example, N for North, or the heading does not change after making turns, there may be a strong magnetic field interfering with the compass. Such interference may be caused by a magnetic CB or cell phone antenna mount, a magnetic emergency light, magnetic note pad holder, or any other magnetic item. Turn off the vehicle, move the magnetic item, then turn on the vehicle and calibrate the compass.

To calibrate the compass, use the following procedure:

Compass Calibration Procedure

1. Before calibrating the compass, make sure the compass zone is set to the variance zone in which the vehicle is located. See “Compass Variance (Zone) Procedure” earlier in this section.

   Do not operate any switches such as window, climate controls, seats, etc. during the calibration procedure.

2. Press until PRESS ✓ TO CALIBRATE COMPASS displays.

3. Press ✓ to start the compass calibration.

4. The DIC will display CALIBRATING: DRIVE IN CIRCLES. Drive the vehicle in tight circles at less than 8 km/h (5 mph) to complete the calibration. The DIC will display CALIBRATION COMPLETE for a few seconds when the calibration is complete. The DIC display will then return to PRESS ✓ TO CALIBRATE COMPASS.

Clock

Setting the Time or Date

1. With the radio on, press and the HR, MIN, MM, DD, and YYYY (hour, minute, month, day, and year) display.

2. Press the softkey under any one of the tabs to be changed. Every time the softkey is pressed again, the time or the date if selected, increases by one.

   Another way to increase the time or date is to press SEEK or FWD (forward).

3. To decrease, press SEEK or REV. Turn the knob, on the upper right side of the radio, to adjust the selected setting.

Changing the Time or Date Default Settings

1. With the radio on, press and then the softkey under the forward arrow that is currently displayed on the infotainment display until the time 12H (hour) and 24H (hour), and the date MM/DD (month and day) and DD/MM (day and month) are displayed.

2. Press the softkey under the desired option.

3. Press again to apply the selected default, or let the screen time out.

Power Outlets

Power Outlets 12 Volt Direct Current

The accessory power outlets can be used to plug in electrical equipment, such as a cell phone or an MP3 player.

The vehicle may have two accessory power outlets on the instrument panel.

Remove the cover to access and replace when not in use.

Certain power accessory plugs may not be compatible to the accessory power outlet and could overload vehicle or adapter fuses. If a problem is experienced, see your dealer.

⚠ Warning

Power is always supplied to the outlets. Do not leave electrical equipment plugged in when the vehicle is not in use because the vehicle could catch fire and cause injury or death.

Caution

Leaving electrical equipment plugged in for an extended period of time while the vehicle is off will drain the battery. Always unplug electrical equipment when not in use and do not plug in equipment that exceeds the maximum 20 amp rating.

When adding electrical equipment, be sure to follow the proper installation instructions included with the equipment. See *Add-On Electrical Equipment* ➪ *153*.

Caution

Hanging heavy equipment from the power outlet can cause damage not covered by the vehicle warranty. The power outlets are designed for accessory power plugs only, such as cell phone charge cords.

Power Outlet 110/120 Volt Alternating Current

This power outlet can be used to plug in electrical equipment that uses a maximum limit of 150 watts.

The 110/120 volt power outlet is on the instrument panel.

An indicator light on the outlet turns on to show it is in use. The light comes on when the ignition is on, equipment requiring less than 150 watts is plugged into the outlet, and no system fault is detected.

The indicator light does not come on when the ignition is off, or if the equipment is not fully seated into the outlet.

If equipment is connected using more than 150 watts or a system fault is detected, a protection circuit shuts off the power supply and the indicator light turns off. To reset the circuit, unplug the item and plug it back in or turn the Retained Accessory Power (RAP) off and then back on. See *Retained Accessory Power (RAP)* ➪ *130* .

The power outlet is not designed for the following, and may not work properly if they are plugged in:

- Equipment with high initial peak wattage, such as compressor-driven refrigerators and electric power tools
- Other equipment requiring an extremely stable power supply, such as microcomputer-controlled electric blankets and touch sensor lights
- Medical equipment

Cigarette Lighter

If equipped with a cigarette lighter, to heat, push it in all the way and let go. When it is ready for use, it will pop back out by itself.

Do not use the lighter to plug in accessory devices. Use the power outlets provided.

Caution

Holding a cigarette lighter in while it is heating does not let the lighter back away from the heating element when it is hot. Damage from overheating can occur to the lighter or heating element, or a fuse could be blown. Do not hold a cigarette lighter in while it is heating.

Ashtrays

Caution
If papers, pins, or other flammable items are put in the ashtray, hot cigarettes or other smoking materials could ignite them and possibly damage the vehicle. Never put flammable items in the ashtray.

If equipped with a removable ashtray, it can be placed into the instrument panel center cupholders. Open the cover to use.

To remove the ashtray, pull it from the cupholder. Push it back down to be sure it is secure.

Warning Lights, Gauges, and Indicators

Warning lights, gauges, and indicators can alert you to an issue with your vehicle. Some warning lights display briefly to show that they are working when you start the vehicle. However, if a warning light persists while driving, or if a gauge shows there may be a problem, be sure to refer to the sections under "Warning Lights, Gauges, and Indicators."

Paying attention to your vehicle's warning lights, gauges, and indicators and promptly addressing any issues may help you to prevent an expensive repair or personal injury. Postponing repairs can be costly and even dangerous.

Instrument Cluster

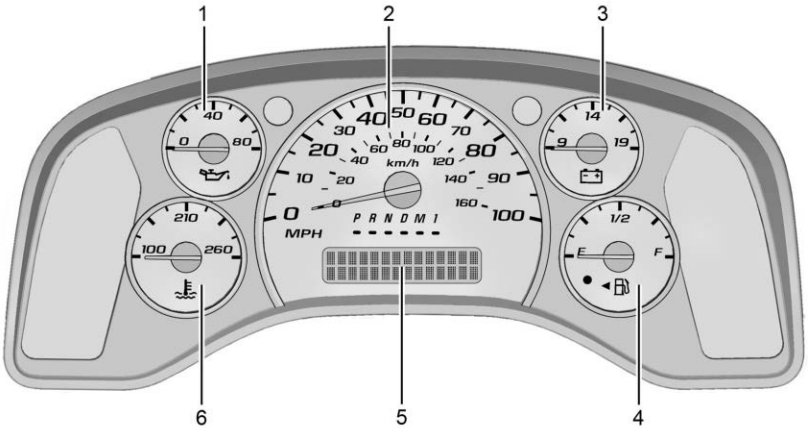

English Shown, Metric Similar

1. *Engine Oil Pressure Gauge* ⇨ *73*
2. *Speedometer* ⇨ *71*
3. *Voltmeter Gauge* ⇨ *74*
4. *Fuel Gauge* ⇨ *72*
5. *Driver Information Center (DIC)* ⇨ *82*
6. *Engine Coolant Temperature Gauge* ⇨ *74*

Speedometer

The speedometer shows the vehicle speed in either kilometers per hour (km/h) or miles per hour (mph).

Odometer

The odometer displays the distance the vehicle has been driven, in either kilometers or miles.

Trip Odometer

The trip odometer displays the distance the vehicle was driven since the trip odometer was last reset.

Access and reset the trip odometer through the Driver Information Center. See *Driver Information Center (DIC)* ⇨ *82*.

Fuel Gauge

Metric

English

When the ignition is on, the fuel gauge indicates the approximate amount of fuel left in the tank.

There is an arrow near the fuel gauge pointing to the side of the vehicle the fuel door is on.

When the indicator nears empty, the low fuel light comes on. There still is a little fuel left, but the vehicle should be refueled soon.

The fuel gauge may:

- Take a little more, or less fuel to fill up than it indicates. For example, the gauge may have indicated the tank is half full, but it actually will take a little more, or less than half the tank's capacity to fill the tank.
- Moves a little while turning a corner, speeding up, or braking.
- Take a few seconds to stabilize after the ignition is turned on and goes back to empty when the ignition is turned off.

These are normal conditions, none of which indicate a problem with the fuel gauge.

Engine Oil Pressure Gauge

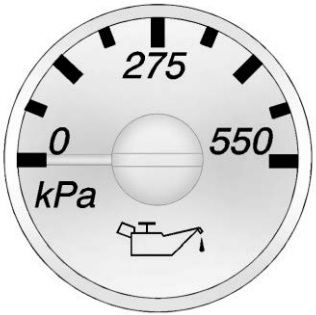

Metric

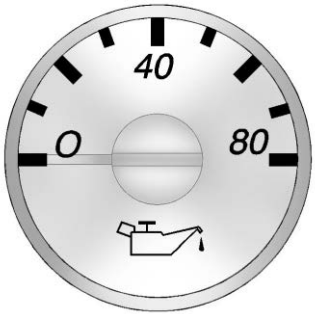

English

The oil pressure gauge shows the engine oil pressure in psi (pounds per square inch) or kPa (kilopascals) when the engine is running.

Oil pressure may vary with engine speed, outside temperature and oil viscosity, but readings above the low pressure zone indicate the normal operating range.

A reading in the low pressure zone may be caused by a dangerously low oil level or other problem causing low oil pressure.

Caution

Lack of proper engine oil maintenance can damage the engine. Driving with the engine oil low can also damage the engine. The repairs would not be covered by the vehicle warranty. Check the oil level as soon as possible. Add oil if required, but if the oil level is within the operating range and the oil pressure is still low, have the vehicle serviced. Always follow the maintenance schedule for changing engine oil.

Engine Coolant Temperature Gauge

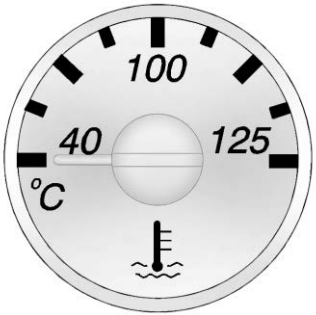

Metric

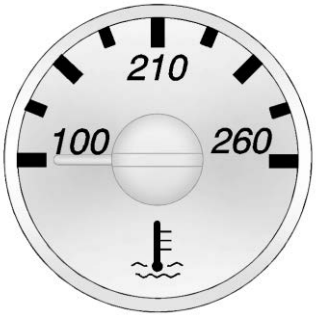

English

This gauge shows the engine coolant temperature.

It also provides an indicator of how hard the vehicle is working. During a majority of the operation, the gauge will read 100 °C (210 °F) or less. If the vehicle is pulling a load or going up hills, it is normal for the temperature to fluctuate and approach the 122 °C (250 °F) mark. If the gauge reaches the 125 °C (260 °F) mark, it indicates that the engine coolant has overheated. If the engine coolant has overheated, pull over and stop the vehicle as soon as it is safe to do so. Then, turn the engine off immediately.

See *Engine Overheating* ⇨ *168*.

Voltmeter Gauge

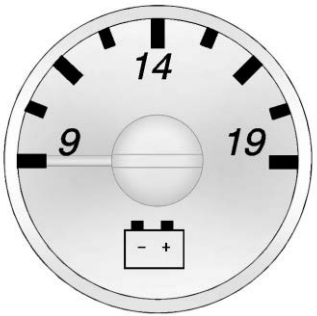

When the engine is not running, but the ignition is on, this gauge shows the battery's state of charge in DC volts.

When the engine is running, the gauge shows the condition of the charging system. Readings between the low and high warning zones indicate the normal operating range.

Readings in the low warning zone may occur when a large number of electrical accessories are operating in the vehicle and the engine is left at an idle for an extended period. This condition is normal since the charging

system is not able to provide full power at engine idle. As engine speeds are increased, this condition should correct itself as higher engine speeds allow the charging system to create maximum power.

The vehicle can be only driven for a short time with the reading in either warning zone. If it must be driven, turn off all unnecessary accessories.

Readings in either warning zone indicate a possible problem in the electrical system. Have the vehicle serviced as soon as possible.

Seat Belt Reminders

Driver Seat Belt Reminder Light

There is a driver seat belt reminder light on the instrument cluster.

When the vehicle is started, or if the driver remains or becomes unbuckled while the vehicle is moving, this light flashes and an audible alert sounds to alert the driver to fasten their seat belt. The light may then display solid until the driver seat belt is buckled. This cycle may continue several times or continuously until the driver seat belt is buckled. If the driver seat belt is buckled, the light will not display and audible alert will not sound.

Airbag Readiness Light

This light shows if there is an electrical problem with the airbag system. It is located in the instrument cluster. The system check includes the airbag sensor(s), the airbag on-off switch, the pretensioners (if equipped), the airbag modules, the wiring, and the crash sensing and diagnostic module. For more information on the airbag system, see *Airbag System* ⇨ *34*.

The airbag readiness light comes on for several seconds when the vehicle is started. If the light does not come on then, have it fixed immediately.

⚠ Warning

If the airbag readiness light stays on after the vehicle is started or comes on while driving, it means the airbag system might not be working properly. The airbags in the vehicle might not inflate in a crash, or they could even inflate without a crash. To help avoid injury, have the vehicle serviced right away.

If there is a problem with the airbag system, a Driver Information Center (DIC) message may also come on.

Airbag On-Off Light

When the front outboard passenger airbag is manually turned off using the airbag on-off switch on the instrument panel, if equipped, the indicator light OFF or the off symbol will come on and stay on as a reminder that the airbag has been turned off. This light will go off when the airbag has been turned on. See *Airbag On-Off Switch* ⇨ *40* for more information, including important safety information.

United States

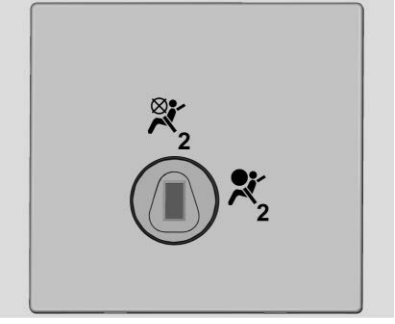

Canada

⚠ Warning

If the front outboard passenger frontal airbag is turned off for a person who is not in a risk group identified by the national government, that person will not have the extra protection of an airbag. In a crash, the airbag will not be able to inflate and help protect the person sitting there. Do not turn off the front outboard passenger frontal airbag unless the person sitting there is in a risk group identified by the national government. See *Airbag On-Off Switch* ⇨ *40* for more information, including important safety information.

⚠ Warning

If the airbag readiness light ever comes on and stays on, it means that something may be wrong with the airbag system. For example, the front outboard passenger frontal airbag could inflate even though the airbag on-off switch is turned off.

(Continued)

Warning (Continued)

To help avoid injury to yourself or others, have the vehicle serviced right away. See *Airbag Readiness Light* ⇨ *75* for more information, including important safety information.

If the word ON or the on symbol is lit, it means that the front outboard passenger frontal airbag is enabled, and may inflate. See *Airbag On-Off Switch* ⇨ *40* for more information, including important safety information.

Charging System Light

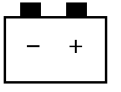

This light displays briefly when you start your vehicle. This is a normal test your vehicle runs on start up.

If the light stays on or displays while driving, there could be a problem with the electrical charging system. Have it checked by your dealer. Driving while this light is on could drain the 12-volt battery.

If you must drive a short distance with the light on, turn off all accessories, such as the radio, to save battery power. Find a safe place to stop the vehicle.

Malfunction Indicator Light (Check Engine Light)

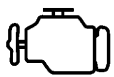

Caution

If the vehicle is driven continually with this light on, the emission control system may not work as well, the fuel economy may be lower, and the vehicle may not

(Continued)

Caution (Continued)

run smoothly. This could lead to costly repairs that might not be covered by the vehicle warranty.

Caution

Modifications to the engine, transmission, exhaust, intake, or fuel system, or the use of replacement tires that do not meet the original tire specifications, can cause this light to come on. This could lead to costly repairs not covered by the vehicle warranty. This could also affect the vehicle's ability to pass an Emissions Inspection/Maintenance test. See *Accessories and Modifications* ⇨ *155*.

This light displays briefly when you start your vehicle. This is a normal test your vehicle runs on start up. If it does not display, see your dealer for service.

The light is part of emission control on-board diagnostic system of the vehicle. If this light stays on or displays while driving, a malfunction is present, and the vehicle may require service. See *Ignition Positions* ⇨ *127*.

The system often shows malfunctions before any problem is noticeable. Being aware of the light and seeking service promptly when it displays may prevent damage.

If the light is flashing: A malfunction has been detected that could damage the emission control system and increase vehicle emissions. Diagnosis and service may be required. See your dealer.

To help prevent damage, reduce vehicle speed, and avoid hard accelerations and uphill grades. If towing a trailer, reduce the amount of cargo being hauled as soon as possible.

If the light continues to flash, find a safe place to park. Turn the vehicle off and wait at least 10 seconds before restarting the engine. If the light is still flashing, follow the previous guidelines under "If the light is flashing," and see your dealer for service as soon as possible.

If the light is on steady: A malfunction has been detected. Diagnosis and service may be required. See your dealer.

Check the following:

- If fuel has been added to the vehicle using the capless funnel adapter, make sure that it has been removed. See “Filling the Tank with a Portable Gas Can” under *Filling the Tank* ⇨ *150*. The diagnostic system can detect if the adapter has been left installed in the vehicle, allowing fuel to evaporate into the atmosphere. A few driving trips with the adapter removed may turn off the light.
- Poor fuel quality can cause inefficient engine operation and poor drivability, which may go away once the engine is warmed up. If this occurs, change the fuel brand. It may require at least one full tank of the proper fuel to turn the light off. See *Recommended Fuel* ⇨ *150*.

If the light remains on, see your dealer.

Emissions Inspection and Maintenance Programs

If the vehicle requires an Emissions Inspection/Maintenance test, the test equipment can be used to connect to the vehicle's Data Link Connector (DLC).

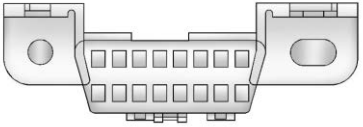

The DLC is under the instrument panel to the left of the steering wheel. Connecting devices that are not used to perform an Emissions Inspection/Maintenance test or to service the vehicle may affect vehicle operation. See *Add-On Electrical Equipment* ⇨ *153*. See your dealer if assistance is needed.

The vehicle may not pass inspection if:

- The Malfunction Indicator Light displays when the engine is running
- The light does not display when the ignition is on while the engine is off.
- Critical emission control systems have not been completely diagnosed. If this happens, the vehicle would not be ready for inspection and might require several days of routine driving before the system is ready for inspection. This can happen if the 12-volt battery has recently been replaced or run down, or if the vehicle has been recently serviced.

See your dealer if the vehicle will not pass or cannot be made ready for the test.

Brake System Warning Light

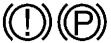

Metric

English

⚠ Warning

The brake system might not be working properly if the brake system warning light is on. Driving with the brake system warning light on can lead to a crash. If the light is still on after the vehicle has been pulled off the road and carefully stopped, have the vehicle towed for service.

This light displays briefly when you start your vehicle. This is a normal test your vehicle runs on startup. If it does not display, see your dealer for service.

When the vehicle is on, the brake system warning light also displays when the parking brake is set. The light stays on if the parking brake does not fully release. If it stays on after the parking brake is fully released, have the brake system inspected immediately. This light may display if the brake fluid is low. See *Brake Fluid* ⇨ *172*.

If the light displays while driving, pull off the road and stop carefully. The brake pedal might be harder to push, or the brake pedal may go closer to the floor. It could take longer to stop. If the light is still on, have the vehicle towed for service. See *Transporting a Disabled Vehicle* ⇨ *215*.

Antilock Brake System (ABS) Warning Light

This light displays briefly when you start your vehicle. This is a normal test your vehicle runs on start up. If it does not display, see your dealer for service.

When the Antilock Brake System (ABS) detects a problem, the warning light displays and stays on, and you may hear an audible alert. Your vehicle brakes will still function, but your Antilock Brake System (ABS) is not functioning as expected. See your dealer for service.

If this warning light and the brake system warning light are displayed, your Antilock Brake System (ABS) and your regular brakes are not functioning as expected. See your dealer for service.

See *Brake System Warning Light* ⇨ *78*.

Tow/Haul Mode Light

If equipped, this light displays when the Tow/Haul mode has been activated.

See *Tow/Haul Mode* ⇨ *136*.

Lane Departure Warning (LDW) Light

This light is green if LDW is on and ready to operate.

This light changes to amber and flashes to indicate that the lane marking has been crossed without using a turn signal in that direction.

See *Lane Departure Warning (LDW)* ⇨ *148*.

Vehicle Ahead Indicator

If equipped, this indicator displays green when a vehicle is detected ahead and amber if you are following a vehicle too closely.

See *Forward Collision Alert (FCA) System* ⇨ *145*.

Traction Control System (TCS)/ Electronic Stability Control Light

This light displays briefly when you start your vehicle. This is a normal test your vehicle runs on startup. If it does not display, see your dealer for service.

The light flashes when the Traction Control System and/or the StabiliTrak/Electronic Stability Control System is actively working.

If the light is on and not flashing, the Traction Control System and StabiliTrak/Electronic Stability Control System may not be fully operational or able to assist maintaining control. Adjust your driving accordingly. If the condition persists, see your dealer as soon as possible. A message may display in the Driver Information Center.

See *Traction Control/Electronic Stability Control* ⇨ *139*.

Electronic Stability Control (ESC) Off Light

This light displays briefly when you start your vehicle. This is a normal test your vehicle runs on start up. If it does not display, see your dealer for service.

This light displays when the StabiliTrak/ Electronic Stability Control system is turned off. When StabiliTrak/Electronic Stability Control is off, the Traction Control System is also off. To turn StabiliTrak/Electronic Stability Control off and on, see *Traction Control/ Electronic Stability Control* ⇨ *139*.

If StabiliTrak/Electronic Stability Control and the Traction Control System are off, the systems do not assist in controlling the vehicle. Adjust your driving accordingly.

Tire Pressure Light

If equipped with the Tire Pressure Monitor System, this light displays briefly when you start your vehicle. This is a normal test your vehicle runs on start up.

The light displays to indicate information about tire pressures and the Tire Pressure Monitor System.

If the Light Stays On

This indicates that one or more of the tires are significantly underinflated.

A Driver Information Center tire pressure message may also display. Stop as soon as possible and inflate the tires to the pressure value shown on the Tire and Loading Information label. See *Tire Pressure* ⇨ *192*.

If the Light Flashes and Then Remains On

If the light flashes for about a minute and then stays on, there may be a problem with the Tire Pressure Monitor System. If the problem is not corrected, the light will display every time the vehicle is started. See *Tire Pressure Monitor Operation* ⇨ *194*.

Engine Oil Pressure Light

Caution

Driving the vehicle with low engine oil pressure can damage the engine and the repairs would not be covered by the vehicle warranty.

If the engine oil pressure light comes on while driving:

1. Stop in a safe location and turn off the engine.
2. Check the oil level. See *Engine Oil* ⇨ *161*.
3. Add oil if the oil level is below the normal operating range.

(Continued)

Caution (Continued)

4. Restart the vehicle. If the engine oil pressure light stays on for more than 10 seconds, turn the vehicle back off. Do not restart the vehicle. See your dealer for service.

This light should display briefly when the engine starts. When the engine is off and the vehicle is on, the light should remain illuminated. If it does not display under either condition, contact your dealer.

If the light displays and stays on when the engine is running, it may not have adequate oil pressure. The oil level may be low or there may be some other oil system problem. Turn the engine off when it is safe to do so and contact your dealer.

Low Fuel Warning Light

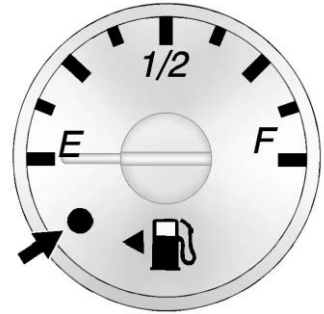

English Shown, Metric Similar

This light displays briefly when you start your vehicle. This is a normal test your vehicle runs on start up.

The light displays when the fuel tank is running low and it turns off when fuel is added. If it does not, see your dealer for service.

Security Light

This light displays briefly when you start your vehicle. This is a normal test your vehicle runs on start up. If it does not display, see your dealer for service.

If the light stays on and the vehicle does not start, there could be a problem with the theft-deterrent system. See *Immobilizer Operation* ➪ *17*.

High-Beam On Light

This light displays when the high-beam headlights are in use. See *High-Beam Systems* ➪ *92*.

Cruise Control Light

This light displays when cruise control is set.

This light turns off when cruise control is canceled. See *Cruise Control* ➪ *140*.

Information Displays

Driver Information Center (DIC)

This vehicle has a DIC.

All messages will appear in the DIC display at the bottom of the instrument cluster.

The DIC comes on when the ignition is on. After a short delay, the DIC will display the information that was last displayed before the engine was turned off.

The DIC displays trip, fuel, and vehicle system information, and warning messages if a system problem is detected.

If the vehicle has these features, the DIC also displays the compass direction and the outside air temperature when viewing the trip and fuel information. The compass direction appears on the top right corner of the DIC display. The outside air temperature automatically appears in the bottom right corner of the DIC display. If there is a problem with the system that controls the temperature display, the numbers will be replaced with dashes. If this occurs, have the vehicle serviced by your dealer.

DIC Operation and Displays

The DIC has different displays which can be accessed by pressing the DIC buttons on the instrument panel, next to the instrument cluster.

DIC Buttons

The buttons are the trip/fuel, vehicle information, customization, and set/reset buttons. The button functions are detailed in the following pages.

: Press this button to display the odometer, trip odometers, fuel range, average economy, fuel used, timer, average speed, and digital tachometer.

: Press this button to display the oil life, rear park assist, units, tire pressure readings for vehicles with the Tire Pressure Monitor System (TPMS), engine hours, Tire Pressure Monitor System (TPMS) programming for vehicles with the TPMS and without a Remote Keyless Entry (RKE) transmitter, and compass zone and compass calibration on vehicles with this feature.

: Press this button to customize the feature settings on the vehicle. See *Vehicle Personalization* ⇨ *87* for more information.

✓ : Press this button to set or reset certain functions and to turn off or acknowledge messages on the DIC.

Trip/Fuel Menu Items

: Press this button to scroll through the following menu items:

Odometer

Press until XX km (mi) displays. This display shows the distance the vehicle has been driven in either kilometers (km) or miles (mi).

Trip Odometers

Press until A or B displays. This display shows the current distance traveled in either kilometers (km) or miles (mi) since the last reset for each trip odometer. Both trip odometers can be used at the same time.

Each trip odometer can be reset to zero separately by pressing ✓ while the desired trip odometer is displayed.

The trip odometer has a feature called the retro-active reset. This can be used to set the trip odometer to the number of kilometers (miles) driven since the ignition was last turned on. This can be used if the trip odometer is not reset at the beginning of the trip.

To use the retro-active reset feature, press and hold ✓ for at least four seconds. The trip odometer will display the number of kilometers (km) or miles (mi) driven since the ignition was last turned on and the vehicle was moving. Once the vehicle begins moving, the trip odometer will accumulate mileage. For example, if the vehicle was driven 8 km (5 miles) before it is started again, and then the retro-active reset feature is activated, the display will show 8 km (5 miles). As the vehicle begins moving, the display will then increase to 8.1 km (5.1 miles), 8.2 km (5.2 miles), etc.

If the retro-active reset feature is activated after the vehicle is started, but before it begins moving, the display will show the number of kilometers (km) or miles (mi) that were driven during the last ignition cycle.

Fuel Range

Press until FUEL RANGE displays. This display shows the approximate number of remaining kilometers (km) or miles (mi) the vehicle can be driven without refueling.

The fuel range estimate is based on an average of the fuel economy over recent driving history and the amount of fuel remaining in the fuel tank. This estimate will change if driving conditions change. For example, if driving in traffic and making frequent stops, this display may read one number, but if the vehicle is driven on a freeway, the number may change even though the same amount of fuel is in the fuel tank. This is because different driving conditions produce different fuel economies. Generally, freeway driving produces better fuel economy than city driving.

If the vehicle is low on fuel, the FUEL LEVEL LOW message will be displayed.

Average Economy

Press until AVG ECONOMY displays. This display shows the approximate average liters per 100 kilometers (L/100 km) or miles per gallon (mpg). This number is calculated based on the number of L/100 km (mpg) recorded since the last time this menu item was reset.

To reset AVG ECONOMY, press and hold ✓. The display will return to zero.

Fuel Used

Press until FUEL USED displays. This display shows the number of liters (L) or gallons (gal) of fuel used since the last reset of this menu item. To reset the fuel used information, press and hold ✓ while FUEL USED is displayed.

Timer

Press until TIMER displays. This display can be used as a timer.

To start the timer, press ✓ while TIMER is displayed. The display will show the amount of time that has passed since the timer was last reset, not including time the ignition is off. Time will continue to be counted as long as the ignition is on, even if another display is being shown on the DIC. The timer will record up to 99 hours, 59 minutes and 59 seconds (99:59:59) after which the display will return to zero.

To stop the timer, press ✓ briefly while TIMER is displayed.

To reset the timer to zero, press and hold ✓ while TIMER is displayed.

Average Speed

Press until AVERAGE SPEED displays. This display shows the average speed of the vehicle in kilometers per hour (km/h) or miles per hour (mph). This average is calculated based on the various vehicle speeds recorded since the last reset of this value. To reset the value, press and hold ✓. The display will return to zero.

Digital Tachometer

Press until Tachometer ##00 RPM displays. This display shows the engine speed in revolutions per minute (RPM).

Blank Display

This display shows no information.

Vehicle Information Menu Items

: Press this button to scroll through the following menu items:

Oil Life

Press 🚗 i until OIL LIFE REMAINING displays. This display shows an estimate of the oil's remaining useful life. If you see 99% OIL LIFE REMAINING on the display, that means 99% of the current oil life remains. The engine oil life system will alert you to change the oil on a schedule consistent with your driving conditions.

When the remaining oil life is low, the CHANGE ENGINE OIL SOON message will appear on the display. You should change the oil as soon as possible. See *Engine Oil* ⇨ *161*. In addition to the engine oil life system monitoring the oil life, additional maintenance is recommended. See *Maintenance Schedule* ⇨ *226*.

Remember, you must reset the OIL LIFE yourself after each oil change. It will not reset itself. Also, be careful not to reset the OIL LIFE accidentally at any time other than when the oil has just been changed. It cannot be reset accurately until the next oil change. To reset the engine oil life system, see *Engine Oil Life System* ⇨ *163*.

Side Blind Zone Alert

If the vehicle has Side Blind Zone Alert (SBZA), this display allows the system to be turned on or off. Press 🚗 i until SBZA displays. Once in this display, press ✓ to select between ON or OFF. When the SBZA system is turned off, a DIC message will display. See *Side Blind Zone Alert (SBZA)* ⇨ *147*.

Park Assist

If the vehicle has the Rear Park Assist (RPA) system, press 🚗 i until PARK ASSIST displays. This display allows the system to be turned on or off. Once in this display, press to select between ON or OFF. The RPA system automatically turns back on after each vehicle start. When the RPA system is turned off and the vehicle is shifted out of P (Park), the DIC will display the PARK ASSIST OFF message as a reminder that the system has been turned off. See *Park Assist* ⇨ *144*.

Units

Press 🚗 i until UNITS displays. This display allows you to select between metric or English units of measurement. Once in this display, press ✓ to select between METRIC or ENGLISH units.

Tire Pressure

If the vehicle has the Tire Pressure Monitor System (TPMS), the pressure for each tire can be viewed in the DIC. The tire pressure will be shown in either kilopascals (kPa) or pounds per square inch (psi). Press 🚗 i until the DIC displays FRONT TIRES PSI (kPa) LEFT ## RIGHT ##. Press 🚗 i again until the DIC displays REAR TIRES PSI (kPa) LEFT ## RIGHT ##.

If a low tire pressure condition is detected by the system while driving, a message advising you to check the pressure in a specific tire will appear in the display. See *Tire Pressure* ⇨ *192*.

If the tire pressure display shows dashes instead of a value, there may be a problem with the vehicle. If this consistently occurs, see your dealer for service.

Engine Hours

Press until ENGINE HOURS displays. This display shows the total number of hours the engine has run.

Relearn Tire Positions

The vehicle may have this display. To access this display, the vehicle must be in P (Park). If the vehicle has the Tire Pressure Monitor System (TPMS), after rotating the tires or after replacing a tire or sensor, the system must re-learn the tire positions. To re-learn the tire positions, see *Tire Pressure Monitor System* ⇨ *193*. See *Tire Inspection* ⇨ *196* and *Tire Rotation* ⇨ *197*.

Change Compass Zone

The vehicle may have this feature. To change the compass zone through the DIC, see *Compass* ⇨ *66*.

Calibrate Compass

The vehicle may have this feature. The compass can be manually calibrated. To calibrate the compass through the DIC, see *Compass* ⇨ *66*.

Blank Display

This display shows no information.

Vehicle Messages

Messages displayed on the Driver Information Center (DIC) indicate the vehicle status or needed action to correct a condition. Multiple messages may appear together.

Press ✓ to acknowledge and clear the messages that do not require immediate action. You cannot clear messages that require immediate action until that action is performed.

Address and follow all message instructions promptly; clearing a message does not correct the issue.

If a SERVICE message appears, see your dealer.

The system may display messages concerning:

- Service Messages
- Fluid Levels
- Vehicle Security
- Brakes
- Ride Control Systems
- Advanced Driver Assistance Systems
- Cruise Control
- Lighting and Bulb Replacement
- Wiper/Washer Systems
- Doors and Windows
- Seat Belts
- Airbag Systems
- Engine and Transmission
- Tire Pressure
- Battery
- Steering

Engine Power Messages

ENGINE POWER IS REDUCED

This message displays when the vehicle's propulsion power is reduced. A reduction in propulsion power can affect the vehicle's ability to accelerate. If this message is on, but there is no observed reduction in performance, proceed to your destination. Under certain conditions, the performance may be reduced the next time the vehicle is driven. The vehicle may be driven while this message is on, but maximum acceleration and speed may be reduced. Anytime this message stays on,

or displays repeatedly, the vehicle should be taken to your dealer for service as soon as possible.

Under certain operating conditions, propulsion will be disabled. Try restarting after the ignition has been off for 30 seconds.

Vehicle Speed Messages

SPEED LIMITED TO XXX KM/H (MPH)

This message shows that the vehicle speed has been limited to the speed displayed. The limited speed is a protection for various propulsion and vehicle systems, such as lubrication; thermal; brake; suspension; tire; or, if equipped, Teen Driver.

Vehicle Personalization

This vehicle may have customization capabilities that allow you to program certain features to one preferred setting. Customization features can only be programmed to one setting on the vehicle and cannot be programmed to a preferred setting for two different drivers.

All of the customization options may not be available on your vehicle. Only the options available will be displayed on the DIC.

The default settings for the customization features were set when the vehicle left the factory, but may have been changed from their default state since then.

The customization preferences are automatically recalled.

To change customization preferences, use the following procedure.

Entering the Feature Settings Menu

1. Turn the ignition on and place the vehicle in P (Park).

   To avoid excessive drain on the battery, it is recommended that the headlights are turned off.

2. Press to enter the feature settings menu.

   If the menu is not available, FEATURE SETTINGS AVAILABLE IN PARK will display. Before entering the menu, make sure the vehicle is in P (Park).

Feature Settings Menu Items

The following are customization features that allow you to program settings to the vehicle:

DISPLAY IN ENGLISH

This feature will only display if a language other than English has been set. This feature allows you to change the language in which the DIC messages appear to English.

Press until the PRESS ✓ TO DISPLAY IN ENGLISH screen appears on the DIC display. Press the set/reset button once to display all DIC messages in English.

LANGUAGE

This feature allows you to select the language in which the DIC messages will appear.

Press until the LANGUAGE screen appears on the DIC display. Press ✓ once to access the settings for this feature. Then press to scroll through the following settings:

ENGLISH (default): All messages will appear in English.

FRANCAIS: All messages will appear in French.

ESPANOL: All messages will appear in Spanish.

NO CHANGE: No change will be made to this feature. The current setting will remain.

To select a setting, press ✓ while the desired setting is displayed on the DIC. A beep will sound once a language has been selected.

AUTO DOOR LOCK

This feature allows you to select when the doors will automatically lock.

Press until AUTO DOOR LOCK appears on the DIC display. Press ✓ once to access the settings for this feature. Then press to scroll through the following settings:

SHIFT OUT OF PARK (default): The doors will automatically lock when the vehicle is shifted out of P (Park).

AT VEHICLE SPEED: The doors will automatically lock when the vehicle speed is above 13 km/h (8 mph) for three seconds.

NO CHANGE: No change will be made to this feature. The current setting will remain.

To select a setting, press ✓ while the desired setting is displayed on the DIC.

AUTO DOOR UNLOCK

This feature allows you to select whether or not to turn off the automatic door unlocking feature. It also allows you to select which doors and when the doors will automatically unlock.

Press until AUTO DOOR UNLOCK appears on the DIC display. Press ✓ once to access the settings for this feature. Then press to scroll through the following settings:

OFF: None of the doors will automatically unlock.

DRIVER IN PARK: Only the driver door will unlock when the vehicle is shifted into P (Park).

ALL IN PARK (default): All of the doors will unlock when the vehicle is shifted into P (Park).

NO CHANGE: No change will be made to this feature. The current setting will remain.

To select a setting, press ✓ while the desired setting is displayed on the DIC.

REMOTE DOOR LOCK

This feature allows you to select the type of feedback you will receive when locking the vehicle with the Remote Keyless Entry (RKE) transmitter. You will not receive feedback when locking the vehicle with the RKE transmitter if the doors are open. See *Remote Keyless Entry (RKE) System Operation* ⇨ *8*.

Press until REMOTE DOOR LOCK appears on the DIC display. Press ✓ once to access the settings for this feature. Then press to scroll through the following settings:

OFF: There will be no feedback when you press on the RKE transmitter.

LIGHTS ONLY: The exterior lights will flash when you press on the RKE transmitter.

HORN ONLY: The horn will sound on the second press of on the RKE transmitter.

HORN & LIGHTS (default): The exterior lights will flash when you press on the RKE transmitter, and the horn will sound when is pressed again within five seconds of the previous command.

NO CHANGE: No change will be made to this feature. The current setting will remain.

To select a setting, press ✓ while the desired setting is displayed on the DIC.

REMOTE DOOR UNLOCK

This feature allows you to select the type of feedback you will receive when unlocking the vehicle with the Remote Keyless Entry (RKE) transmitter. You will not receive feedback when unlocking the vehicle with the RKE transmitter if the doors are open. See *Remote Keyless Entry (RKE) System Operation* ⇨ *8*.

Press until REMOTE DOOR UNLOCK appears on the DIC display. Press ✓ once to access the settings for this feature. Then press to scroll through the following settings:

LIGHTS OFF: The exterior lights will not flash when you press on the RKE transmitter.

LIGHTS ON (default): The exterior lights will flash when you press on the RKE transmitter.

NO CHANGE: No change will be made to this feature. The current setting will remain.

To select a setting, press ✓ while the desired setting is displayed on the DIC.

DELAY DOOR LOCK

This feature allows you to select whether or not the locking of the doors will be delayed. When locking the doors with the power door lock switch and a door is open, this feature will delay locking the doors until five seconds after the last door is closed. You will hear three chimes to signal that the delayed locking feature is in use. The key must be out of the ignition for this feature to work. You can temporarily override delayed locking by pressing the power door lock switch twice or on the RKE transmitter twice. See *Delayed Locking* ⇨ *12*.

Press until DELAY DOOR LOCK appears on the DIC display. Press ✓ once to access the settings for this feature. Then press to scroll through the following settings:

OFF: There will be no delayed locking of the vehicle's doors.

ON (default): The doors will not lock until five seconds after the last door is closed.

NO CHANGE: No change will be made to this feature. The current setting will remain.

To select a setting, press ✓ while the desired setting is displayed on the DIC.

EXIT LIGHTING

This feature allows you to select the amount of time you want the exterior lights to remain on when it is dark enough outside. This happens after the key is turned from on to off.

Press until EXIT LIGHTING appears on the DIC display. Press ✓ once to access the settings for this feature. Then press to scroll through the following settings:

OFF: The exterior lights will not turn on.

10 SECONDS (default): The exterior lights will stay on for 10 seconds.

1 MINUTE: The exterior lights will stay on for one minute.

2 MINUTES: The exterior lights will stay on for two minutes.

NO CHANGE: No change will be made to this feature. The current setting will remain.

To select a setting, press ✓ while the desired setting is displayed on the DIC.

CHIME VOLUME

This feature allows you to select the volume level of the chime.

Press until CHIME VOLUME appears on the DIC display. Press ✓ once to access the settings for this feature. Then press to scroll through the following settings:

NORMAL: The chime volume will be set to a normal level.

LOUD: The chime volume will be set to a loud level.

NO CHANGE: No change will be made to this feature. The current setting will remain.

There is no default for chime volume. The volume will stay at the last known setting.

To select a setting, press ✓ while the desired setting is displayed on the DIC.

FACTORY SETTINGS

This feature allows you to set all of the customization features back to their factory default settings.

Press until FACTORY SETTINGS appears on the DIC display. Press ✓ once to access the settings for this feature. Then press to scroll through the following settings:

RESTORE ALL (default): The customization features will be set to their factory default settings.

DO NOT RESTORE: The customization features will not be set to their factory default settings.

To select a setting, press ✓ while the desired setting is displayed on the DIC.

EXIT FEATURE SETTINGS

This feature allows you to exit the feature settings menu.

Press until FEATURE SETTINGS PRESS ✓ TO EXIT appears in the DIC display. Press ✓ once to exit the menu.

If you do not exit, pressing will return you to the beginning of the feature settings menu.

Exiting the Feature Settings Menu

The feature settings menu will be exited when any of the following occurs:

- The vehicle is no longer on.
- The or DIC buttons are pressed.
- The end of the feature settings menu is reached and exited.
- A 40–second time period has elapsed with no selection made.

Lighting

Exterior Lighting
Headlight Controls 91
High-Beam Systems 92
Headlights Off Reminder 92
Daytime Running Lights 92
Automatic Headlight System 92
Hazard Warning Flashers 93
Turn and Lane-Change Signals 94

Interior Lighting
Instrument Panel Illumination Control 94
Dome Lights 94
Reading Lights 95

Lighting Features
Entry Lighting 95
Exit Lighting 95
Battery Load Management 95
Battery Power Protection 96
Exterior Lighting Battery Saver 96

Exterior Lighting

Headlight Controls

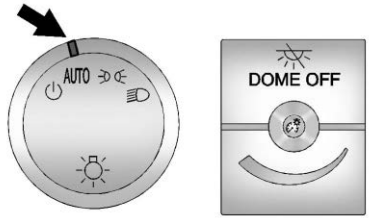

The exterior light control is on the instrument panel to the left of the steering wheel.

There are four positions:

⏻: Turns off the exterior lights and deactivates the AUTO mode. Turn to ⏻ again to reactivate the AUTO mode.

For vehicles first sold in Canada, the Automatic Headlight System activates when off is selected, and either the headlights or Daytime Running Lights come on. See *Daytime Running Lights* ➪ *92*.

Auto: Enables the automatic headlight system, which controls the exterior lights and instrument panel lights depending on outside lighting. See *Automatic Headlight System* ➪ *92*.

: Turns on the parking lights, taillights, and license plate lights.

: Turns on the headlights; other exterior lights such as taillights, parking lights, and license plate lights; and the instrument panel lights.

A warning chime sounds if the driver door is opened while the ignition switch is off and the headlights are on.

Lights On in Canada

For vehicles first sold in Canada, it is required that either Daytime Running Lights or headlights are always on when the vehicle is shifted out of P (Park). Even if the headlight control is set to off or , the Automatic Headlight System is engaged and ensures that either the Daytime Running Lights or headlights come on based on outside light level.

High-Beam Systems

Manual High-Beam Controls

High/Low-Beam Changer

To manually turn the high beams on, push the turn signal lever away from you until it stays in place. To return to low beams, push the lever again or pull it toward you and release.

The high-beam indicator light appears in the instrument cluster when the high-beam headlights are on.

Flash-to-Pass

To flash the high beams, briefly pull the turn signal lever toward you and release.

Headlights Off Reminder

If a door is open, a reminder chime sounds when the headlights or parking lights are manually turned on and the key is out of the ignition. To turn off the chime, turn the headlight switch to or AUTO and then back on, or close and re-open the door. In the auto mode, the headlights turn off once the ignition is off or may remain on until the headlight delay ends, if enabled in the Driver Information Center (DIC). See “Exit Lighting” under *Vehicle Personalization* ⇨ *87*.

Daytime Running Lights

Daytime Running Lights can make it easier for others to see the front of your vehicle during the day.

The Automatic Headlight System turns the Daytime Running Lights on and off.

When Daytime Running Lights Turn On

The Daytime Running Lights turn on when all the following conditions are met:

- The vehicle is on
- The headlight control is set to Auto
- The light sensor determines it is daytime

The instrument panel lights, taillights, and other exterior lights do not turn on when the Daytime Running Lights are on.

For vehicles first sold in Canada, it is required that either Daytime Running Lights or headlights are always on when the vehicle is shifted out of P (Park). Even if the headlight control is set to Off or , the Automatic Headlight System is engaged and ensures that either the Daytime Running Lights or headlights come on based on outside light level.

When Daytime Running Lights Turn Off

When it begins to get dark, the automatic headlight system turns off the Daytime Running Lights and turns on the headlights.

The Daytime Running Lights turn off when you turn off either the headlights or the vehicle.

For vehicles first sold in Canada: the Daytime Running Lights turn off only when the vehicle is shifted to P (Park) and the headlight control is off.

Automatic Headlight System

When it is dark enough outside and the headlight switch is in AUTO, the automatic headlight system turns on the headlights, along with the taillights, sidemarker lights, parking lights, and the instrument panel lights. The radio lights will also be dim.

To turn off the automatic headlight system, turn the exterior light control to the off position and then release. For vehicles first sold in

Canada, the transmission must be in the P (Park) position, before the automatic headlight system can be turned off.

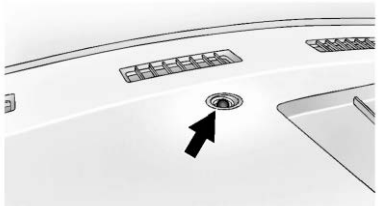

The vehicle has a light sensor on the top of the instrument panel. Do not cover the sensor; otherwise the system will come on whenever the ignition is on.

The system may also turn on the headlights when driving through a parking garage or tunnel.

There is a delay in the transition between the daytime and nighttime operation of the Daytime Running Lights and the automatic headlight system so that driving under bridges or bright overhead street lights does not affect the system. The Daytime Running Lights and automatic headlight system are only affected when the light sensor sees a change in lighting lasting longer than the delay.

If the vehicle is started in a dark garage, the automatic headlight system comes on immediately. Once the vehicle leaves the garage, there is a short delay before the automatic headlight system changes to Daytime Running Lights if it is light outside. During that delay, the instrument cluster may not be as bright as usual. Make sure the instrument panel brightness control is in the full bright position. See *Instrument Panel Illumination Control* ⇨ *94*.

To idle the vehicle with the automatic headlight system off, turn the control off.

The headlights will also stay on after exiting the vehicle. This feature may be programmable. See *Vehicle Personalization* ⇨ *87*.

If the feature is not programmable, exit lighting is automatic. When it is dark enough outside, the exterior lights remain on for a brief amount of time after the ignition is turned off.

Lights On with Wipers

If the windshield wipers are activated in daylight with the engine on, and the exterior light control is in AUTO, the headlights, parking lights, and other exterior lights come on. The transition time for the lights coming on varies based on wiper speed. When the wipers are not operating, these lights turn off. Move the exterior light control to ⏻ or ≋ to disable this feature.

Hazard Warning Flashers

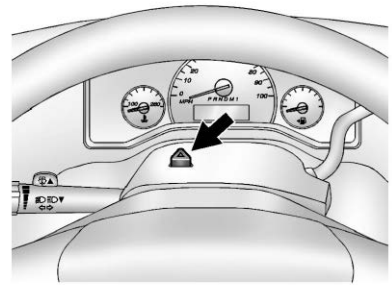

⚠ **:** Press this button to make the front and rear turn signal lights flash on and off. This warns others that you are having trouble. Press again to turn the flashers off.

When the hazard warning flashers are on, the vehicle's turn signals will not work.

Turn and Lane-Change Signals

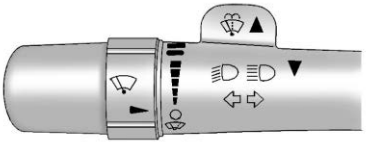

⇦⇨ **:** An arrow on the instrument cluster flashes in the direction of the turn or lane change.

To signal a turn, move the lever all the way up or down.

To signal a lane change, raise or lower the lever until the arrow starts to flash. The turn signal automatically flashes three times and if the Tow/Haul Mode is active it flashes six times. Holding the turn signal lever for more than one second causes the turn signals to flash continually until the lever is released.

The lever returns to its starting position when released.

If after signaling a turn or lane change the arrow flashes rapidly or does not come on, a signal bulb may be burned out.

Have any burned out bulbs replaced. If a bulb is not burned out, check the fuse. See *Fuses and Circuit Breakers* ⇨ *180*.

Turn Signal On Chime

If the turn signal is left on for more than 1.2 km (0.75 mi), a chime sounds at each flash of the turn signal and the message TURN SIGNAL ON also appears in the Driver Information Center (DIC). To turn off the chime and message, move the turn signal lever to the off position.

Interior Lighting

Instrument Panel Illumination Control

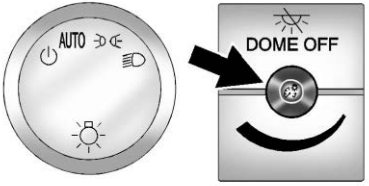

This feature adjusts the brightness of all illuminated controls. The instrument panel illumination control is next to the exterior light control.

: Push the knob in all the way until it extends out and then turn the knob clockwise or counterclockwise to brighten or dim the lights. Push the knob back in when finished.

The knob is functional at night or when the headlights or parking lights are ON.

Dome Lights

The dome lights will come on when any door is opened; the Remote Keyless Entry transmitter unlock is pressed, if equipped; or when the ignition is switched off. They will turn off after a delay, when all doors are closed, or when the ignition is switched on.

The instrument panel brightness knob extends when is pressed. To manually turn on the dome lights, press then turn the knob clockwise to the farthest position. In this position, the dome lights remain on whether a door is opened or closed.

Dome Light Override

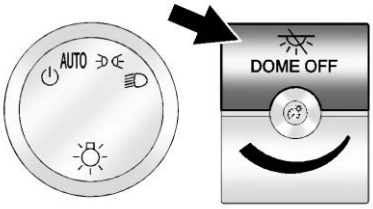

The dome light override sets the dome lights to remain off or come on automatically when a door is opened; the Remote Keyless Entry transmitter unlock is pressed, if equipped; or when the ignition is switched off.

DOME OFF: Press this button in and the dome lights remain off when a door is opened; the Remote Keyless Entry transmitter unlock is pressed, if equipped; or the ignition is switched off. Press the button again to return it to the extended position so that the dome lights come on when a door is opened; the Remote Keyless Entry transmitter unlock is pressed, if equipped; or when the ignition is switched off.

Reading Lights

If equipped with reading lights, press the button next to each lights to turn it on or off.

The vehicle may also have reading lights in other locations.

Lighting Features

Entry Lighting

The interior lights may turn on by opening any door or when pressing on the Remote Keyless Entry transmitter, if equipped.

For interior lights to turn on, be sure the dome light override is not in the DOME OFF position. See *Dome Lights* ⇨ *94*.

Some exterior lights also turn on when pressing on the Remote Keyless Entry transmitter, if equipped. Low-beam headlights will only turn on briefly at night or in areas with limited lighting.

All lights will gradually fade out.

Entry lighting can be disabled manually by closing all doors; pressing on the Remote Keyless Entry transmitter, if equipped; or by starting the vehicle.

This feature can be changed. See "Exit Lighting" under *Vehicle Personalization* ⇨ *87*.

Exit Lighting

Some exterior lights and interior lights turn on when the driver door is opened after the vehicle is turned off.

The exterior and interior lights remain on for a set amount of time, then automatically turn off.

The interior lights turn on when the vehicle is turned off.

The exterior lights turn off immediately by turning the exterior light control off.

This feature can be changed. See *Vehicle Personalization* ⇨ *87*.

Battery Load Management

Electric Power Management estimates the battery temperature and state of charge. It then adjusts the voltage for best performance and extended life of the battery.

When the battery state of charge is low, the voltage raises slightly to quickly bring the charge back up. When the state of charge is high, the voltage lowers slightly to prevent

overcharging. As this adjustment occurs, you may see the voltage move up or down on the voltmeter gauge or voltage display, if equipped, on the instrument cluster. This is normal. If there is a problem, an alert will be displayed. See *Instrument Cluster* ⇨ *71*

For all vehicles, the battery can be discharged at idle if the electrical loads are very high. This is because the generator (alternator) may not be spinning fast enough at idle to produce all the power that is needed for very high electrical loads.

A high electrical load occurs when several of the following are on: headlights, high beams, fog lights, rear window defogger, climate control fan at high speed, heated seats, engine cooling fans, trailer loads, and loads plugged into accessory power outlets.

Electric Power Management prevents excessive discharge of the battery by balancing the generator's output and the vehicle's electrical needs. It can increase engine idle speed to generate more power, whenever needed. It can temporarily reduce the power demands of some accessories.

Normally, these actions occur in steps or levels, without being noticeable. In rare cases at the highest levels of corrective action, you may notice these actions and a Driver Information Center message might be displayed. If so, reduce the electrical loads as much as possible. See *Driver Information Center (DIC)* ⇨ *82*

Battery Power Protection

This feature helps prevent the battery from being drained if you leave the interior dome lights or reading lights on. These lights automatically turn off 10 minutes after you turn the vehicle off. The lights will not turn back on again until one of the following actions occurs:

- You start the vehicle.
- You close the doors, then re-open them.

Exterior Lighting Battery Saver

The exterior lights turn off about 10 minutes after the vehicle is turned off, if the parking lights or headlights have been manually left on. This protects against draining the battery. To restart the 10-minute timer, turn the exterior light control to the ⏻ position and then back to the 🚗 or 🚙 position.

To keep the lights on for more than 10 minutes, the vehicle must be on or in accessory mode.

Infotainment System

Introduction
Infotainment 97
Theft-Deterrent Feature 98
Overview 99
Operation 100
Radio
AM-FM Radio 101
Satellite Radio 102
Radio Reception 103
Fixed Mast Antenna 104
Multi-Band Antenna 104
Audio Players
Avoiding Untrusted Media Devices 104
Auxiliary Devices 104
Trademarks and License Agreements
Trademarks and License Agreements 108

Introduction

Infotainment

Read the following pages to become familiar with the features.

⚠ Warning

Taking your eyes off the road for too long or too often while using any infotainment feature can cause a crash. You or others could be injured or killed. Do not give extended attention to infotainment tasks while driving. Limit your glances at the vehicle displays and focus your attention on driving. Use voice commands whenever possible.

The infotainment system has built-in features intended to help avoid distraction by disabling some functions when driving. Many infotainment features are also available through the instrument cluster.

Before driving:

- Become familiar with the operation, center stack controls, and infotainment controls.
- Set up the audio by presetting favorite stations, setting the tone, and adjusting the speakers.
- Set up phone numbers in advance so they can be called easily by pressing a single control or by using a single voice command if equipped with Bluetooth phone capability.

See *Defensive Driving* ➪ *117*.

To play the infotainment system with the ignition off, see *Retained Accessory Power (RAP)* ➪ *130*.

Active Noise Cancellation (ANC)

If equipped, ANC reduces engine noise in the vehicle's interior. ANC requires the factory-installed audio system, radio, speakers, amplifier (if equipped), induction system, and exhaust system to work properly. Deactivation is required by your dealer if related aftermarket equipment is installed.

Theft-Deterrent Feature

The theft-deterrent feature works by learning a portion of the Vehicle Identification Number (VIN) to the infotainment system. The infotainment system does not operate if it is stolen or moved to a different vehicle.

Overview

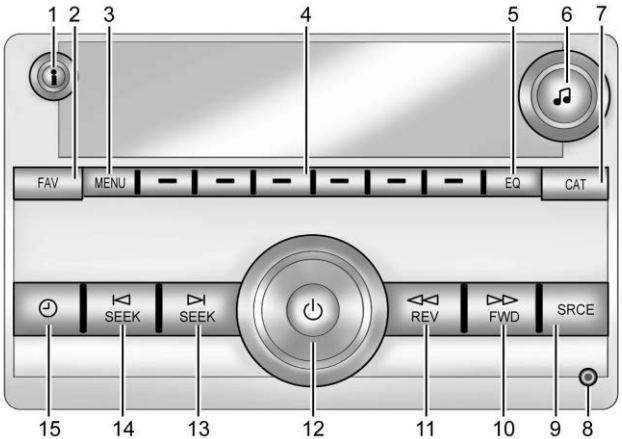

1. ℹ
   - Press to show information on the current station or track.
2. FAV
   - Press to scroll through the favorite pages.
3. MENU
   - Press to set the number of favorite pages.
   - Press to select the Speed Compensation Volume setting.
   - Press to turn Auto Page Text Information on or off.
4. Buttons 1 - 6
   - Press to save and select favorite stations.
5. EQ
   - Press to adjust the equalizer.
6. ♫
   - Press to set the bass, midrange, treble, fade, and balance.
   - Turn to manually select radio stations.
7. CAT
   - Press to display a list of SiriusXM categories, if equipped.
8. Auxiliary Input Jack (If Equipped)
   - Use to connect external audio devices.
9. SRCE
   - Press to scroll through auxiliary devices, AM, FM, or SiriusXM if equipped.
10. ▷▷ FWD
    - Press and hold to fast forward through a track.
11. ◁◁ REV
    - Press and hold to go backward fast through a track.

12. ⏻
    - Press to turn the infotainment system on or off.
    - Turn to adjust the volume.
13. ⏭SEEK
    - Seeks or scans to the next station.
14. ⏮SEEK
    - Seeks or scans to the previous station.
15. 🕘
    - Press to set the clock and date.

Operation

Using the Radio

⏻ **:** Press to turn the system on and off.

Turn clockwise or counterclockwise to increase or decrease the volume.

i : Press to switch the display between the radio station frequency and the time. While the ignition is off, press this button to display the time. Press to display additional text information related to the current FM-RDS station or MP3 song. A choice of additional information such as Channel, Song, Artist, and CAT (category) can display. Continue pressing to highlight the desired tab, or press the softkey under any one of the tabs and the information about that tab displays.

Speed Compensated Volume (SCV): SCV automatically adjusts the radio volume to compensate for road and wind noise as the vehicle speed changes while driving, so that the volume level stays consistent.

To activate SCV:

1. Set the radio volume to the desired level.
2. Press the MENU button to display the radio setup menu.
3. Press the softkey under the AUTO VOLUM (automatic volume) tab on the infotainment display.
4. Press the softkey under the desired SCV setting (OFF, Low, Med, or High) to select the level of radio volume compensation. The display times out after approximately 10 seconds. Each higher setting allows for more radio volume compensation at faster vehicle speeds.

Setting the Tone (Bass/Treble)

To adjust the bass or treble:

1. Press the ♫ knob until Bass or Treble displays.
2. To adjust the setting, do one of the following:
    - Turn the ♫ knob.
    - Press ⏭SEEK, or ⏮SEEK.

EQ : Press this button to choose bass and treble equalization settings designed for different types of music. Selecting MANUAL, or changing bass or treble, returns the EQ to the manual bass and treble settings.

Unique EQ settings can be saved for each source.

Adjusting the Speakers (Balance/Fade)

BAL/FADE **:** To adjust the balance or fade:

1. Press the ♫ knob until the speaker control tabs display.
2. Highlight the desired speaker control tab by doing one of the following:
    - Press the ♫ knob.

- Press the softkey under the desired tab.

3. Adjust the setting by doing one of the following:
   - Turn the ♫ knob clockwise or counterclockwise.
   - Press ⏭ SEEK or ⏮ SEEK.
   - Press ▷▷ FWD or ◁◁ REV.

To quickly adjust all speaker and tone controls to the middle position, press the ♫ knob for more than two seconds.

If the Rear Seat Audio (RSA) is turned on, the radio disables FADE and mutes the rear speakers.

Radio Messages

Calibration Error: The audio system has been calibrated for the vehicle from the factory. If Calibration Error displays, it means that the radio has not been configured properly for the vehicle and it must be returned to your dealer for service.

VIN or NO VIN : One of these messages will display when the TheftLock system has locked up the radio. Take the vehicle to your dealer for service.

If any error occurs repeatedly or if an error cannot be corrected, contact your dealer.

Radio

AM-FM Radio

Radio Data System (RDS)

The radio may have an RDS. The RDS feature is available for use only on FM stations that broadcast RDS information. This system relies upon receiving specific information from these stations and only works when the information is available. While the radio is tuned to an FM-RDS station, the station name or call letters display. In rare cases, a radio station could broadcast incorrect information that causes the radio features to work improperly. If this happens, contact the radio station.

Finding a Station

SRCE **:** Press to switch between FM1, FM2, AM, and SiriusXM if equipped. The selection displays.

♫ **:** Turn clockwise or counterclockwise to increase or decrease the station frequency.

⏮ SEEK **or** ⏭ SEEK **:** Press ⏮ SEEK to go to the previous or ⏭ SEEK to go to the next station and stay there.

To scan stations, press and hold either button for two seconds until a beep sounds. The radio goes to a station, plays for a few seconds, then goes to the next station. For AM-FM Radio, the station frequency flashes while the radio is in the scan mode. Press either button again to stop scanning.

The radio seeks and scans stations only with a strong signal that are in the selected band.

Scan presets within the current selected band by pressing and holding either SEEK button for four seconds until a double beep sounds. The radio goes to a stored preset, plays for a few seconds if a strong signal is present, then goes to the next stored preset. The station frequency flashes while the radio is in the scan mode.

Storing a Radio Station as a Favorite

You are encouraged to set up radio station favorites while the vehicle is parked. Tune to favorite stations using the presets and favorites button. See *Defensive Driving* ➪ *117*.

FAV **:** If equipped with a FAV button, a maximum of 36 stations can be programmed as favorites by using the six softkeys below the radio station frequency tabs and by using the radio favorites page button (FAV button). Press FAV to go through up to six pages of favorites, each having six favorite stations available per page. Each page of favorites can contain any combination of AM and FM stations.

The balance/fade and tone settings that were previously adjusted are stored with the favorite stations.

To store a station as a favorite:

1. Tune to the desired radio station.
2. Press FAV to display the page where the station is to be stored.
3. Press and hold one of the six softkeys until a beep sounds. When that softkey is pressed and released, the station that was set returns.
4. Repeat the steps for each softkey radio station to be stored as a favorite.

The number of favorites pages can be set up using the MENU button. To set up the number of favorites pages:

1. Press MENU to display the radio setup menu.
2. Press the softkey below the FAV 1-6 tab.
3. Select the desired number of favorites pages by pressing the softkey below the displayed page numbers.
4. Press FAV, or let the menu time out, to return to the original main radio screen showing the radio station frequency tabs and to begin the process of programming favorites for the chosen number of numbered pages.

Satellite Radio

SiriusXM, if equipped, is a satellite radio service based in the United States and Canada only.

Finding a Category (CAT) Station

CAT **:** The CAT button is used to find SiriusXM channels (if equipped) while the radio is in the SiriusXM mode.

Finding a Channel

BAND **or** SRCE **:** Press to switch between FM1, FM2, AM, and SiriusXM if equipped. The selection displays.

♫ **:** Turn clockwise or counterclockwise to increase or decrease the station frequency.

⏮ SEEK **or** ⏭ SEEK **:** Press ⏮ SEEK to go to the previous or ⏭ SEEK to go to the next station and stay there.

To scan stations, press and hold either button for two seconds until a beep sounds. The radio goes to a station, plays for a few seconds, then goes to the next station. The station frequency flashes while the radio is in the scan mode. Press either button again to stop scanning.

The radio seeks and scans stations only with a strong signal that are in the selected band.

To scan presets within the current selected band, press and hold either SEEK button for four seconds until a double beep sounds. The radio goes to a stored preset, plays for a few seconds if a strong signal is present, then goes to the next stored preset. The station frequency flashes while the radio is in the scan mode.

Storing a Radio Station as a Favorite

You are encouraged to set up radio station favorites while the vehicle is parked. Tune to favorite stations using the presets and favorites button. See *Defensive Driving* ⇨ *117*.

FAV **:** If equipped with a FAV button, a maximum of 36 stations can be programmed as favorites using the six softkeys below the radio station frequency tabs and by using the radio favorites page button (FAV button). Press FAV to go through up to six pages of favorites, each having six favorite stations available per page. Each page of favorites can contain any combination of AM, FM, or SiriusXM stations.

The balance/fade and tone settings that were previously adjusted are stored with the favorite stations.

To store a station as a favorite:

1. Tune to the desired radio station.
2. Press FAV to display the page where the station is to be stored.
3. Press and hold one of the six softkeys until a beep sounds. When that softkey is pressed and released, the station that was set returns.
4. Repeat the steps for each softkey radio station to be stored as a favorite.

The number of favorites pages can be set up using the MENU button. To set up the number of favorites pages:

1. Press MENU to display the radio setup menu.
2. Press the softkey below the FAV 1-6 tab.
3. Select the desired number of favorites pages by pressing the softkey below the displayed page numbers.
4. Press FAV, or let the menu time out, to return to the original main radio screen showing the radio station frequency tabs and to begin the process of programming favorites for the chosen number of numbered pages.

Radio Reception

Unplug any electronic devices from the accessory power outlets if there is static interference.

FM

FM signals only reach about 16 to 65 km (10 to 40 mi). Although the radio has a built-in electronic circuit that automatically works to reduce interference, some static can occur, especially around tall buildings or hills, causing the sound to fade in and out.

AM

The range for most AM stations is greater than FM, especially at night. The longer range may also cause station frequencies to interfere with each other. Storms and power lines may also interfere with radio reception. Try reducing the treble on the radio if static interference occurs.

SiriusXM Satellite Radio Service

If equipped, SiriusXM Satellite Radio Service provides digital radio reception. Tall buildings or hills can interfere with satellite radio signals, causing the sound to fade in and out. In addition, traveling or parking under heavy foliage, bridges, garages, or tunnels may cause loss of the SiriusXM signal for a period of time. Some cellular services may interfere with SiriusXM reception causing signal loss.

Mobile Devices

Making or receiving calls, charging, or just having a mobile device on may cause static interference. Unplug or turn off any mobile devices if this happens.

Fixed Mast Antenna

The fixed mast antenna will go through most car washes as long as it is securely attached. If the antenna becomes slightly bent, straighten it out by hand. If it is badly bent, replace it.

Occasionally check that the antenna is tight at the base. If tightening is required, protect the paint from damage.

Multi-Band Antenna

The roof antenna may be used for radio, navigation, and OnStar, depending on the equipped options. Keep clear of obstructions for clear reception. If the vehicle has a sunroof, and it is open, reception can also be affected.

Audio Players

Avoiding Untrusted Media Devices

When using media devices such as CDs, DVDs, Blu-ray Discs, SD cards, USB devices, and mobile devices, consider the source. Untrusted media devices could contain files that affect system operation or performance. Avoid use if the content or origin cannot be trusted.

Auxiliary Devices

Using the Auxiliary Input Jack

Radios with an auxiliary input jack on the lower right side can connect to an external audio device such as an iPod, MP3 player, or CD player for use as another source for audio listening. This input jack is not an audio output; do not plug headphones into the front auxiliary input jack.

Drivers are encouraged to set up any auxiliary device while the vehicle is in P (Park). See *Defensive Driving* ⇨ *117* for more information on driver distraction.

To use a portable audio player, connect a 3.5 mm (1/8 in) cable to the radio's front auxiliary input jack. When a device is connected, press the radio CD/AUX button to begin playing audio from the device over the vehicle speakers.

For optimal sound quality, increase the portable audio device's volume to the loudest level.

It is always best to power the portable audio device through its own battery while playing.

⏻ **:** Turn clockwise or counterclockwise to increase or decrease the volume of the portable player. Additional volume adjustments might have to be made from the portable device if the volume is not loud or soft enough.

BAND **:** If equipped, press to listen to the radio when a portable audio device is playing. The portable audio device continues playing.

CD/AUX **:** If equipped, press to play a CD when a portable audio device is playing. Press again and the system begins playing audio from the connected portable audio player. If a portable audio player is not connected, “No Input Device Found” displays.

SRCE : If equipped, press to listen to the radio when a portable audio device is playing. The portable audio device continues playing.

Press to play a CD when a portable audio device is playing. Press again and the system begins playing audio from the connected portable audio player. If a portable audio player is not connected, “No Input Device Found” displays.

Using the USB Port

Radios with a USB port can control a USB storage device or an iPod using the radio buttons and knobs.

USB Support

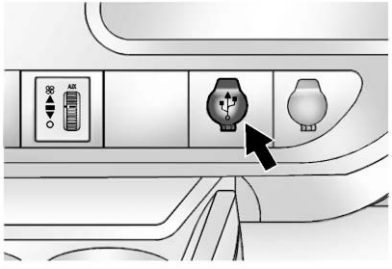

Caution

To avoid vehicle damage, unplug all accessories and disconnect all accessory cables from the vehicle when not in use. Accessory cables left plugged into the vehicle, unconnected to a device, could be damaged or cause an electrical short if the unconnected end comes in contact with liquids or another power source such as the accessory power outlet.

If equipped, the USB port is on the instrument panel and uses the USB 2.0 standard.

USB-Supported Devices

- USB flash drive
- Portable USB hard drive
- Fifth generation or later iPod
- iPod nano
- iPod touch
- iPod classic

Not all iPods and USB drives are compatible with the USB port.

Make sure the iPod has the latest firmware from Apple for proper operation. iPod firmware can be updated using the latest iTunes application. See www.apple.com/itunes.

For help with identifying the iPod, go to www.apple.com/support.

Radios that have a USB port can play .mp3 and .wma files that are stored on a USB storage device as well as AAC files that are stored on an iPod.

USB-Supported File and Folder Structure

The radio supports:

- Up to 700 folders.
- Up to eight folders in depth.
- Up to 65,535 files.
- Folder and file names up to 64 bytes.
- Files with an .mp3 or .wma file extension.
- AAC files stored on an iPod.
- FAT16.
- FAT32.

Connecting a USB Storage Device or iPod

The USB port can be used to control an iPod or a USB storage device.

To connect a USB storage device, connect the device to the USB port on the instrument panel.

To connect an iPod, connect one end of the USB cable that came with the iPod to the iPod's dock connector and connect the other end to the USB port on the instrument panel. If the vehicle is on and the USB connection works, "OK to disconnect" and a GM logo may appear on the iPod, and iPod appears on the infotainment display. The iPod music appears on the infotainment display and begins playing.

The iPod charges while it is connected to the vehicle if the ignition is on or in ACC/ACCESSORY. When the vehicle is turned off, the iPod automatically powers off and will not charge or draw power from the vehicle's battery.

If you have an older iPod model that is not supported, it can still be used by connecting it to the auxiliary input jack using a standard 3.5 mm (1/8 in) stereo cable. See "Using the Auxiliary Input Jack" previously in this section.

Using the Radio to Control a USB Storage Device or iPod

The radio can control a USB storage device or an iPod using the radio buttons and knobs, and can display song information on the infotainment display.

♫ **:** Turn to select files.

⏮ SEEK **:** Press to go to the start of the track, if more than 10 seconds have played. Press and hold or press multiple times to continue moving backward through tracks.

⏭ SEEK **:** Press to go to the next track. Press and hold or press multiple times to continue moving forward through tracks.

◁◁ REV **:** Press and hold to reverse playback quickly. Sound is heard at a reduced volume. Release ◁◁ REV to resume playing. The elapsed time of the file displays.

▷▷ FWD **:** Press and hold to advance playback quickly. Sound is heard at a reduced volume. Release ▷▷ FWD to resume playing. The elapsed time of the file displays.

i : Press to display additional information about the selected track.

Using Softkeys to Control a USB Storage Device or iPod

The five softkeys below the infotainment display are used to control the functions listed below.

To use the softkeys:

1. Press the first or fifth softkey below the infotainment display to display the functions listed below, or press the softkey below the function if it is currently displayed.
2. Press the softkey below the tab with the function on it to use that function.

II : Press the softkey below **II** to pause the track. The tab appears raised when pause is being used. Press the softkey below **II** again to resume playback.

Back : Press the softkey below the Back tab to go back to the main display screen on an iPod, or the root directory on a USB storage device.

🗀 **:** Press the softkey below 🗀 to view the contents of the current folder on the USB drive. To browse and select files:

1. Press the softkey below 🗀.
2. Turn ♫ to scroll through the list of folders.

3. Press ♫ to select the desired folder. If there is more then one folder, repeat Steps 1 and 2 until the desired folder is reached.
4. Turn ♫ to scroll through the files in the selected folder.
5. Press ♫ to select the desired file to be played.

To skip through large lists, the five softkeys can be used to navigate in the following order:

- First softkey, first item in the list.
- Second softkey, 1% through the list each time the softkey is pressed.
- Third softkey, 5% through the list each time the softkey is pressed.
- Fourth softkey, 10% through the list each time the softkey is pressed.
- Fifth softkey, end of the list.

: Press the softkey below to view and select a file on an iPod, using the iPod's menu system. Files are sorted by:

- Playlists
- Artists
- Albums
- Genres
- Songs
- Composers

To select files:

1. Press the softkey below .
2. Turn ♫ to scroll through the list of menus.
3. Press ♫ to select the desired menu.
4. Turn ♫ to scroll through the folders or files in the selected menu.
5. Press ♫ to select the desired file to be played.

To skip through large lists, the five softkeys can be used to navigate in the following order:

- First softkey, first item in the list.
- Second softkey, 1% through the list each time the softkey is pressed.
- Third softkey, 5% through the list each time the softkey is pressed.
- Fourth softkey, 10% through the list each time the softkey is pressed.
- Fifth softkey, end of the list.

Repeat Functionality

To use Repeat:

Press the softkey below or 1 to select between Repeat All and Repeat Track.

: Press the softkey below to repeat all tracks. The tab appears lowered when Repeat All is being used. This is the default mode when a USB storage device or iPod is first connected.

1 **:** Press the softkey below 1 to repeat one track. The tab appears raised when Repeat Track is being used.

Shuffle Functionality

To use Shuffle:

Press the softkey below , S, A, or F to select between Shuffle Off, Shuffle All Songs/Shuffle Songs, Shuffle Album, or Shuffle Folder.

: Press the softkey below S to turn shuffle off. This is the default mode when a USB storage device or iPod is first connected.

S **:** Press the softkey below F or A to shuffle all songs on the USB storage device or iPod.

⤮A: Press the softkey below ⇄ to shuffle all songs in the current album on an iPod.

⤮F: Press the softkey below ⇄ to shuffle all songs in the current folder on a USB storage device.

Trademarks and License Agreements

FCC Information

See *Radio Frequency Statement* ⇨ *246*.

Made for iPhone

"Made for iPhone," means that an electronic accessory has been designed to connect specifically to iPhone, and has been certified by the developer to meet Apple performance standards. Apple is not responsible for the operation of this device or its compliance with safety and regulatory standards. Please note that the use of this accessory with iPhone may affect wireless performance. iPhone is a trademark of Apple Inc., registered in the U.S. and other countries.

SiriusXM

Trial length and service availability may vary by model, model year or trim. Service will automatically stop at the end of your trial subscription period unless you decide to continue service. If you do not wish to enjoy your trial, you can cancel by calling the number below. All SiriusXM services require a subscription, each sold separately by SiriusXM after the trial period. Service subject to the applicable SiriusXM Customer Agreement and Privacy Policy, visit www.siriusxm.com (USA) or www.siriusxm.ca (Canada) to see complete terms and how to cancel which includes calling 1-866-635-2349 (USA) or 1-888-539-7474 (Canada). Some services and features are subject to device capabilities and location availability. Content varies by SiriusXM subscription package. All fees, content and features are subject to change.

SiriusXM with 360L: Some features, including streaming content and listening recommendations, require an active OnStar Connected Access plan and may vary by vehicle model. Content varies by SiriusXM subscription plan. GM connected vehicle services vary by vehicle model and require active service plan, working electrical system, cell reception and GPS signal. See onstar.com for details and limitations.

SiriusXM, Pandora, Stitcher and all related logos are trademarks of Sirius XM Radio Inc. and its respective subsidiaries.

SiriusXM satellite service is only available in the 48 contiguous United States (and Puerto Rico with limited availability) and Canada.

In Canada: Some deterioration of service may occur in extreme northern latitudes. This is beyond the control of SiriusXM.

Explicit Language Notice: Channels with frequent explicit language are indicated with an “XL” preceding the channel name. Family-friendly packages are available by contacting SiriusXM:

- USA Customers — See www.siriusxm.com or call 1-888-601-6296.
- Canada Customers — See www.siriusxm.ca or call 1-877-438-9677.

It is prohibited to copy, decompile, disassemble, reverse engineer, hack, manipulate, or otherwise make available any technology or software incorporated in receivers compatible with the SiriusXM Satellite Radio System or that support the SiriusXM website, the Online Service or any of its content.

General Requirements:

1. A License Agreement from SiriusXM is required for any product that incorporates SiriusXM Technology and/or for use of any of the SiriusXM marks to be manufactured, distributed, or marketed in the SiriusXM Service Area.
2. For products to be distributed, marketed, and/or sold in Canada, a separate agreement is required with Sirius XM Canada Inc.

Bluetooth

The Bluetooth word mark and logos are owned by the Bluetooth SIG, Inc. and any use of such marks by General Motors is under license. Other trademarks and trade names are those of their respective owners.

Climate Controls

Climate Control Systems
Climate Control Systems 110
Rear Heating System 111
Rear Climate Control System 112
Air Vents
Air Vents 114
Maintenance
Service 115

Climate Control Systems

The heating, cooling, and ventilation for the vehicle can be controlled with this system.

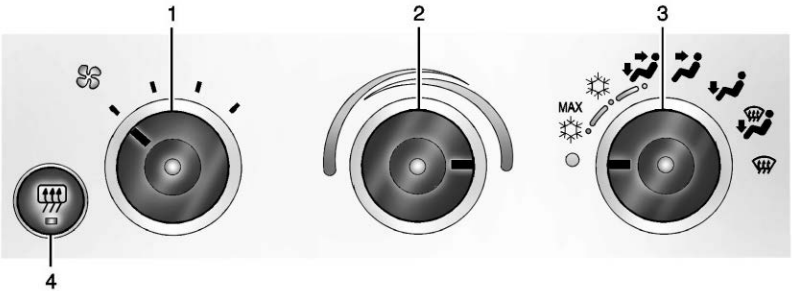

1. Fan Control
2. Temperature Control
3. Air Delivery Mode Control
4. Rear Window Defogger (If Equipped)

On hot days, open the windows to let hot inside air escape; then close them. This helps to reduce the time needed for the vehicle to cool down and the system operates more efficiently.

: Turn the knob clockwise or counterclockwise to increase or decrease the fan speed.

: Turns the system off.

: Cools and dehumidifies the air inside of the vehicle.

MAX : Cools the air inside the vehicle faster, by recirculating the inside air.

Temperature Control: Turn the knob clockwise or counterclockwise to increase or decrease the temperature inside the vehicle.

Air Delivery Mode Control: Turn the knob clockwise or counterclockwise to change the current airflow mode.

: Air is directed to the instrument panel outlets.

: Air is divided between the instrument panel and floor outlets, with some air directed toward the windshield.

: Air is directed to the floor outlets with some air directed to the windshield and side windows.

: This mode clears the windows of fog or moisture. Outside air is directed to the floor and defroster outlets. Adjust the temperature knob for warmer or cooler air. The air conditioning compressor might turn on in this setting to dehumidify the air.

: This mode clears the windshield of fog or frost more quickly. Air is directed to the windshield, with some to the floor outlets and front side windows. The air conditioning compressor might turn on in this setting to dehumidify the air.

Do not drive the vehicle until all the windows are clear.

Rear Window Defogger

Caution
Do not use a razor blade or sharp object to clear the inside rear window. Do not adhere anything to the defogger grid lines in the rear glass. These actions may damage the rear defogger. Repairs would not be covered by the vehicle warranty.

If equipped with a rear window defogger, a warming grid is used to remove fog or frost from the rear window.

: Press to turn the rear window defogger on or off. An indicator light on the button comes on to show that the rear window defogger is on.

The defogger only works when the ignition is on. The defogger turns off if the ignition is turned off or to ACC/ACCESSORY.

Heated Mirrors: If equipped with heated outside mirrors, the mirrors heat to help clear fog or frost from the surface of the mirror when is pressed. See *Heated Mirrors* ⇨ *19*.

Do not drive the vehicle until all the windows are clear.

Rear Heating System

If equipped, the rear heating system lets you adjust the amount of air flowing into the rear of the vehicle, from the front seating area. This feature works with the main climate control system in the vehicle.

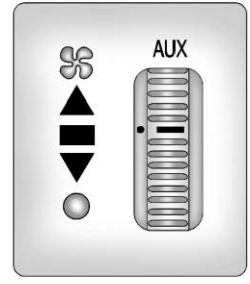

AUX: The thumbwheel for this system is on the instrument panel below the audio system.

: Turn the thumbwheel up or down to increase or decrease the amount of heated air sent to the rear seating area.

▲ : This position supplies the most amount of heat to the rear seating area.

■ **:** This position supplies half the amount of heat to the rear seating area.

▼ **:** This position supplies the least amount of heat to the rear seating area.

◯ **:** This turns the rear heating system off.

Rear Climate Control System

If equipped with a rear heating and air conditioning system, it controls the temperature, fan speed, and air delivery for the rear seat passengers only. The front climate control panel is in the overhead console between the driver and front passenger.

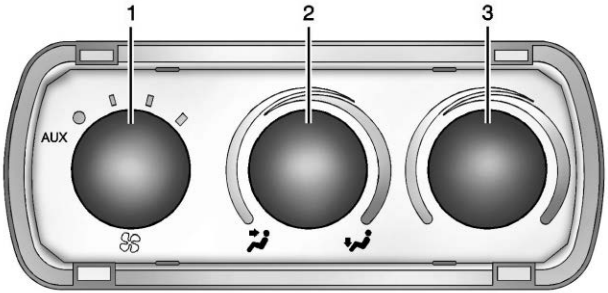

Front Climate Control Panel

1. Fan Control
2. Air Delivery Mode Control
3. Temperature Control

Use this control panel to maintain a separate temperature setting. Adjust the direction of the airflow or adjust the fan speed for the rear seat passenger(s).

When the fan knob is in the AUX position, the rear climate control panel can be used to adjust the climate settings in the rear seating area.

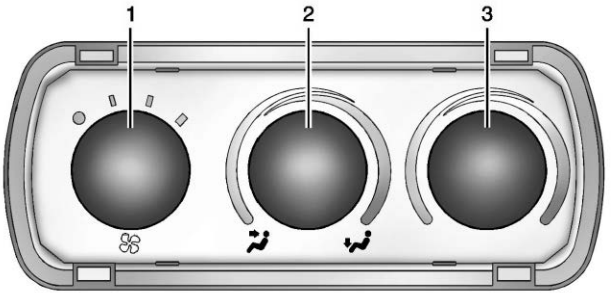

Rear Climate Control Panel

1. Fan Control
2. Air Delivery Mode Control
3. Temperature Control

For vehicles with a rear climate control panel, it is located overhead behind the driver and front passenger, centered in front of the second row. To adjust the rear climate control panel settings by a rear seat passenger, the front climate control panel fan knob must be in the AUX position. The fan speed, air delivery mode, and temperature can then be adjusted.

AUX: Turn the fan knob on the front climate control panel to AUX to let rear seat passengers use the control panel in the rear seating area. This disables the front control panel. To return control to the front panel, move the fan knob out of AUX.

: Turns the system off.

: Turn clockwise or counterclockwise to increase or decrease the fan speed in the rear seating area.

Temperature Control: Turn clockwise or counterclockwise to increase or decrease the temperature in the rear seating area.

The air conditioning system on the main climate control panel must be turned on to direct cooled air to the rear of the vehicle. If it is not on, then the temperature in the rear of the vehicle remains at cabin temperature.

Air Delivery Mode Control: Turn clockwise or counterclockwise to change the direction of the airflow in the rear seating area.

To change the current mode, select one of the following:

: Air is directed to the upper outlets, with some directed to the floor outlets.

: Air is directed to the floor outlets.

Be sure to keep the area under the front seats clear of any objects so that the air inside of the vehicle can circulate effectively.

For information on how to use the main climate control system, see *Climate Control Systems* ⇨ *110*. For information on ventilation, see *Air Vents* ⇨ *114*.

Air Vents

Use the outlets located near the center and on the sides of the instrument panel to change the direction of airflow.

Operation Tips

- Clear away any ice, snow or leaves from the air inlets at the base of the windshield that may block the flow of air into the vehicle.
- Use of non-GM approved hood deflectors may adversely affect the performance of the system.
- Clear snow off the hood to improve visibility and help decrease moisture drawn into the vehicle.
- Keep the path under the front seats clear of objects to help circulate the air inside of the vehicle more effectively.

Maintenance

Service

All vehicles have a label underhood that identifies the refrigerant used in the vehicle. The refrigerant system should only be serviced by trained and certified technicians. The air conditioning evaporator should never be repaired or replaced by one from a salvage vehicle. It should only be replaced by a new evaporator to ensure proper and safe operation.

During service, all refrigerants should be reclaimed with proper equipment. Venting refrigerants directly to the atmosphere is harmful to the environment and may also create unsafe conditions based on inhalation, combustion, frostbite, or other health-based concerns.

The refrigerant system requires periodic maintenance. See your dealer for service.

Driving and Operating

Driving Information
Driving for Better Fuel Economy 117
Distracted Driving 117
Defensive Driving 117
Impaired Driving 118
Control of a Vehicle 118
Braking 118
Steering 118
Off-Road Recovery 119
Loss of Control 120
Driving on Wet Roads 120
Hill and Mountain Roads 121
Winter Driving 121
If the Vehicle Is Stuck 122
Vehicle Load Limits 123

Starting and Operating
New Vehicle Break-In 126
Ignition Positions 127
Starting the Engine 128
Fast Idle System 129
Retained Accessory Power (RAP) 130
Engine Coolant Heater 130
Parking over Things That Burn 131

Engine Exhaust
Engine Exhaust 132
Running the Vehicle While Parked 132

Automatic Transmission
Automatic Transmission 132
Manual Mode 136
Tow/Haul Mode 136

Brakes
Antilock Brake System (ABS) 137
Parking Brake 137
Brake Assist 138
Hill Start Assist (HSA) 138

Ride Control Systems
Traction Control/Electronic Stability Control 139
Locking Rear Axle 140

Cruise Control
Cruise Control 140

Driver Assistance Systems
Driver Assistance Systems 142
Rear Vision Camera (RVC) 143
Park Assist 144
Forward Collision Alert (FCA) System 145
Side Blind Zone Alert (SBZA) 147
Lane Departure Warning (LDW) 148

Fuel
Top Tier Fuel 149
Recommended Fuel 150
Prohibited Fuels 150
Fuels in Foreign Countries 150
Fuel Additives 150
Filling the Tank 150
Filling a Portable Fuel Container 152

Trailer Towing
General Towing Information 152

Conversions and Add-Ons
Add-On Electrical Equipment 153

Driving Information

Driving for Better Fuel Economy

Driving habits can affect fuel mileage. Here are some driving tips to get the best fuel economy possible:

- Set the climate controls to the desired temperature after the engine is started, or turn them off when not required.
- Avoid fast starts and accelerate smoothly.
- Brake gradually and avoid abrupt stops.
- Avoid idling the engine for long periods of time.
- When road and weather conditions are appropriate, use cruise control.
- Always follow posted speed limits or drive more slowly when conditions require.
- Keep vehicle tires properly inflated.
- Combine several trips into a single trip.
- Replace the vehicle's tires with the same TPC Spec number molded into the tire's sidewall near the size.
- Follow recommended scheduled maintenance.

Distracted Driving

Distraction comes in many forms and can take your focus from the task of driving. Exercise good judgment and do not let other activities divert your attention away from the road. Many local governments have enacted laws regarding driver distraction. Become familiar with the local laws in your area.

To avoid distracted driving, keep your eyes on the road, keep your hands on the steering wheel, and focus your attention on driving.

- Do not use a phone in demanding driving situations. Use a hands-free method to place or receive necessary phone calls.
- Watch the road. Do not read, take notes, or look up information on phones or other electronic devices.
- Designate a front seat passenger to handle potential distractions.
- Become familiar with vehicle features before driving, such as programming favorite radio stations and adjusting climate control and seat settings. Program all trip information into any navigation device prior to driving.
- Wait until the vehicle is parked to retrieve items that have fallen to the floor.
- Stop or park the vehicle to tend to children.
- Keep pets in an appropriate carrier or restraint.
- Avoid stressful conversations while driving, whether with a passenger or on a cell phone.

⚠ Warning

Taking your eyes off the road too long or too often could cause a crash resulting in injury or death. Focus your attention on driving.

Refer to the infotainment section for more information on using that system and the navigation system, if equipped, including pairing and using a cell phone.

Defensive Driving

Defensive driving means to always expect the unexpected. The first step in driving defensively is to wear a seat belt. See *Seat Belts* ➪ 27.

- Assume that other road users (pedestrians, bicyclists, and other drivers) are going to be careless and make mistakes. Anticipate what they may do and be ready.
- Allow enough following distance between your vehicle and the vehicle in front of you.
- Focus on the task of driving.

Impaired Driving

Death and injury associated with impaired driving is a global tragedy.

⚠ Warning

Drinking alcohol or taking drugs and then driving is very dangerous. Your reflexes, perceptions, attentiveness, and judgment can be affected by even a small amount of alcohol or drugs. You can have a serious — or even fatal — collision if you drive after drinking or taking drugs.

Do not drive while under the influence of alcohol or drugs, or ride with a driver who has been drinking or is impaired by drugs. Find alternate transportation home; or if you are with a group, designate a driver who will remain sober.

Control of a Vehicle

Braking, steering, and accelerating are important factors in helping to control a vehicle while driving.

Braking

Braking action involves perception time and reaction time. Deciding to push the brake pedal is perception time. Actually doing it is reaction time.

Average driver reaction time is about three-quarters of a second. In that time, a vehicle moving at 100 km/h (60 mph) travels 20 m (66 ft), which could be a lot of distance in an emergency.

Helpful braking tips to keep in mind include:

- Keep enough distance between you and the vehicle in front of you.
- Avoid needless heavy braking.
- Keep pace with traffic.

If the engine ever stops while the vehicle is being driven, brake normally but do not pump the brakes. Doing so could make the pedal harder to push down. If the engine stops, there will be some power brake assist but it will be used when the brake is applied. Once the power assist is used up, it can take longer to stop and the brake pedal will be harder to push.

Steering

Caution

To avoid damage to the steering system, do not drive over curbs, parking barriers, or similar objects at speeds greater than 3 km/h (1 mph). Use care when driving over other objects such as lane dividers and speed bumps. Damage caused by misuse of the vehicle is not covered by the vehicle warranty.

Hydraulic Power Steering

This vehicle has hydraulic power steering. It may require maintenance. See *Power Steering Fluid* ⇨ *170*.

If power steering assist is lost because the engine stops or because of a system malfunction, the vehicle can be steered but may require increased effort. See your dealer if there is a problem.

Caution

If the steering wheel is turned until it reaches the end of its travel, and is held in that position for more than 15 seconds, damage may occur to the power steering system and there may be loss of power steering assist.

Curve Tips

- Take curves at a reasonable speed.
- Reduce speed before entering a curve.
- Maintain a reasonable steady speed through the curve.
- Wait until the vehicle is out of the curve before accelerating gently into the straightaway.

Steering in Emergencies

- There are some situations when steering around a problem may be more effective than braking.
- Holding both sides of the steering wheel allows you to turn 180 degrees without removing a hand.
- Antilock Brake System (ABS) allows steering while braking.

Off-Road Recovery

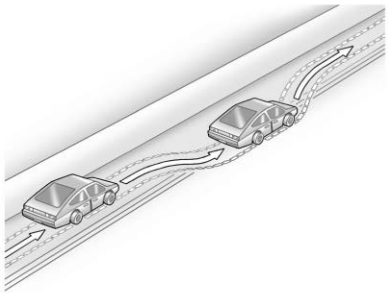

The vehicle's right wheels can drop off the edge of a road onto the shoulder while driving. Follow these tips:

1. Ease off the accelerator and then, if there is nothing in the way, steer the vehicle so that it straddles the edge of the pavement.
2. Turn the steering wheel about one-eighth of a turn, until the right front tire contacts the pavement edge.
3. Turn the steering wheel to go straight down the roadway.

Loss of Control

Skidding

There are three types of skids that correspond to the vehicle's three control systems:

- Braking Skid — wheels are not rolling.
- Steering or Cornering Skid — too much speed or steering in a curve causes tires to slip and lose cornering force.
- Acceleration Skid — too much throttle causes the driving wheels to spin.

Antilock brakes help to avoid only the braking skid.

Defensive drivers avoid most skids by taking reasonable care suited to existing conditions, and by not exceeding those conditions. But skids are always possible.

If the vehicle starts to skid, follow these suggestions:

- Ease your foot off the accelerator pedal and steer the way you want the vehicle to go. The vehicle may straighten out, but if it skids again from oversteer, be ready to correct another skid if it occurs.
- Slow down and adjust your driving according to weather conditions. Stopping distance may be longer and vehicle control may be affected when traction is reduced by water, snow, ice, gravel, or other material on the road. Learn to recognize warning clues — such as enough water, ice, or packed snow on the road to make a mirrored surface — and slow down when you have any doubt.
- Try to avoid sudden steering, acceleration, or braking, including reducing vehicle speed by shifting to a lower gear. Any sudden changes could cause the tires to slide.

Driving on Wet Roads

Rain and wet roads can reduce vehicle traction and affect your ability to stop and accelerate. Always drive slower in these types of driving conditions and avoid driving through large puddles and deep-standing or flowing water.

⚠ Warning

Wet brakes can cause crashes. They might not work as well in a quick stop and could cause pulling to one side. You could lose control of the vehicle.

After driving through a large puddle of water or a car/vehicle wash, lightly apply the brake pedal until the brakes work normally.

Flowing or rushing water creates strong forces. Driving through flowing water could cause the vehicle to be carried away. If this happens, you and other vehicle occupants could drown. Do not ignore police warnings and be very cautious about trying to drive through flowing water.

Hydroplaning

Hydroplaning is dangerous. Water can build up under the vehicle's tires so they actually ride on the water. This can happen if the road is wet enough and you are going fast enough. When the vehicle is hydroplaning, it has little or no contact with the road.

There is no hard and fast rule about hydroplaning. The best advice is to slow down when the road is wet.

Other Rainy Weather Tips

Besides slowing down, other wet weather driving tips include:

- Allow extra following distance.
- Pass with caution.
- Keep windshield wiping equipment in good shape.
- Keep the windshield washer fluid reservoir filled.
- Have good tires with proper tread depth. See *Tires* ⇨ *187*.
- Turn off cruise control.

Hill and Mountain Roads

Driving on steep hills or through mountains is different than driving on flat or rolling terrain. Tips include:

- Keep the vehicle serviced and in good shape.
- Check all fluid levels and brakes, tires, and cooling system.
- Shift to a lower gear when going down steep or long hills.

⚠ Warning

Using the brakes to slow the vehicle on a long downhill slope can cause brake overheating, can reduce brake performance, and could result in a loss of braking. Shift the transmission to a lower gear to let the engine assist the brakes on a steep downhill slope.

⚠ Warning

Coasting downhill in N (Neutral) or with the ignition off is dangerous. This can cause overheating of the brakes and loss of steering assist. Always have the engine running and the vehicle in gear.

- Drive at speeds that keep the vehicle in its own lane. Do not swing wide or cross the center line.
- Be alert on top of hills; something could be in your lane (e.g., stalled car, crash).
- Pay attention to special road signs (e.g., falling rocks area, winding roads, long grades, passing or no-passing zones) and take appropriate action.

Winter Driving

Driving on Snow or Ice

Caution

To avoid damage to the wheels and brake components, always clear snow and ice from inside the wheels and underneath the vehicle before driving.

Snow or ice between the tires and the road causes less traction or grip, so drive carefully. Wet ice can occur at about 0 °C (32 °F) when freezing rain begins to fall. Avoid driving on wet ice or in freezing rain until the roads are treated.

For Slippery Road Driving:

- Accelerate gently. Accelerating too quickly causes the wheels to spin and makes the surface under the tires slick.
- Turn on the Traction Control System. See *Traction Control/Electronic Stability Control* ⇨ *139*.

- Apply the brakes sooner than you would on dry pavement. The Antilock Brake System (ABS) improves vehicle stability during hard stops. See *Antilock Brake System (ABS)* ⇨ *137*.
- Allow greater following distance and watch for slippery spots. Icy patches can occur on otherwise clear roads in shaded areas. The surface of a curve or an overpass can remain icy when the surrounding roads are clear. Avoid sudden steering maneuvers and braking while on ice.
- Turn off cruise control.

Blizzard Conditions

Stop the vehicle in a safe place and signal for help. Stay with the vehicle unless there is help nearby. If possible, use Roadside Assistance. See *Roadside Assistance Program* ⇨ *241*. To get help and keep everyone in the vehicle safe:

- Turn on the hazard warning flashers.
- Tie a red cloth to an outside mirror.

⚠ Warning

Snow can trap engine exhaust under the vehicle. This may cause exhaust gases to get inside. Engine exhaust contains carbon monoxide (CO), which cannot be seen or smelled. It can cause unconsciousness and even death.

If the vehicle is stuck in snow:

- Clear snow from the base of the vehicle, especially any blocking the exhaust pipe.
- Open a window about 5 cm (2 in) on the vehicle side that is away from the wind, to bring in fresh air.
- Fully open the air outlets on or under the instrument panel.
- Adjust the climate control system to circulate the air inside the vehicle and set the fan speed to the highest setting. See "Climate Control Systems."

For more information about CO, see *Engine Exhaust* ⇨ *132*.

To save fuel, run the engine for short periods to warm the vehicle and then shut the engine off and partially close the window. Moving about to keep warm also helps.

If it takes time for help to arrive, when running the engine, push the accelerator pedal slightly so the engine runs faster than the idle speed. This keeps the battery charged to restart the vehicle and to signal for help with the headlights. Do this as little as possible, to save fuel.

If the Vehicle Is Stuck

Slowly and cautiously spin the wheels to free the vehicle when stuck in sand, mud, ice, or snow.

The Traction Control System (TCS) can often help to free a stuck vehicle. See *Traction Control/Electronic Stability Control* ⇨ *139*.

If TCS cannot free the vehicle, turn TCS off and use the rocking method. See "Rocking the Vehicle to Get it Out" following.

⚠ Warning

If the vehicle's tires spin at high speed, they can explode, and you or others could be injured. The vehicle can overheat, causing an engine compartment fire or other damage. Spin the wheels as little as possible and avoid going above 56 km/h (35 mph).

Rocking the Vehicle to Get it Out

Turn the steering wheel left and right to clear the area around the front wheels. Turn off any traction system. Shift back and forth between R (Reverse) and a low forward gear, spinning the wheels as little as possible. To prevent transmission wear, wait until the wheels stop spinning before shifting gears. Release the accelerator pedal while shifting, and press lightly on the accelerator pedal when the transmission is in gear. Slowly spinning the wheels in the forward and reverse directions causes a rocking motion that could free the vehicle. If that does not get the vehicle out after a few tries, it might need to be towed out. If the vehicle does need to be towed out, see *Transporting a Disabled Vehicle* ⇨ *215*.

Vehicle Load Limits

It is very important to know how much weight the vehicle can carry. This weight is called the vehicle capacity weight and includes the weight of all occupants, cargo, and all nonfactory-installed options. Two labels on the vehicle may show how much weight it was designed to carry, the Tire and Loading Information label and the Certification/Tire label.

⚠ Warning

Do not load the vehicle any heavier than the Gross Vehicle Weight Rating (GVWR), or either the maximum front or rear Gross Axle Weight Rating (GAWR). This can cause systems to break and change the way the vehicle handles. This could cause loss of control and a crash. Overloading can also reduce stopping performance, damage the tires, and shorten the life of the vehicle.

Tire and Loading Information Label

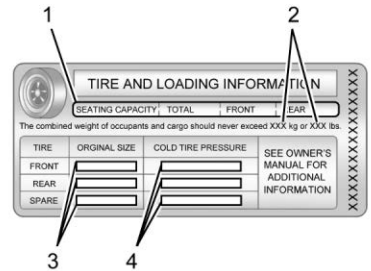

Label Example

A vehicle specific Tire and Loading Information label is attached to the driver side door frame. The tire and loading information label shows the number of occupant seating positions (1), and the maximum vehicle capacity weight (2) in kilograms and pounds.

The Tire and Loading Information label also shows the size of the original equipment tires (3) and the recommended

cold tire inflation pressures (4). For more information on tires and inflation see *Tires* ➪ *187* and *Tire Pressure* ➪ *192*.

There is also important loading information on the vehicle Certification/ Tire label. It may show the Gross Vehicle Weight Rating (GVWR) and the Gross Axle Weight Rating (GAWR) for the front and rear axle. See “Certification/Tire Label” later in this section.

Steps for Determining Correct Load Limit

1. Locate the statement "The combined weight of occupants and cargo should never exceed XXX kg or XXX lbs." on your vehicle’s placard.
2. Determine the combined weight of the driver and passengers that will be riding in your vehicle.
3. Subtract the combined weight of the driver and passengers from XXX kg or XXX lbs.
4. The resulting figure equals the available amount of cargo and luggage load capacity. For example, if the "XXX" amount equals 1400 lbs. and there will be five 150 lb passengers in your vehicle, the amount of available cargo and luggage load capacity is 650 lbs. (1400-750 (5 x 150) = 650 lbs.)
5. Determine the combined weight of luggage and cargo being loaded on the vehicle. That weight may not safely exceed the available cargo and luggage load capacity calculated in Step 4.
6. If your vehicle will be towing a trailer, load from your trailer will be transferred to your vehicle. Consult this manual to determine how this reduces the available cargo and luggage load capacity of your vehicle.

See *General Towing Information* ➪ *152* for important information on towing a trailer, towing safety rules, and trailering tips.

If aftermarket accessories are installed on the vehicle, for example a rooftop carrier, be sure to add the weight of all installed accessories to the combined weight of luggage and cargo.

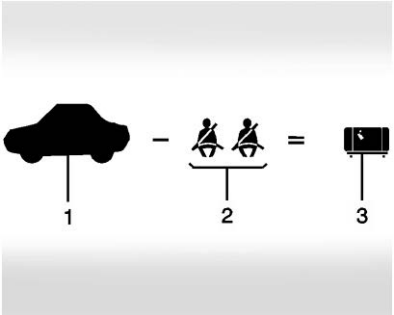

Example 1

1. Vehicle Capacity Weight for Example 1 = 453 kg (1,000 lb)

   Then subtract Accessory Weight, for example a rooftop cargo box = 15.8 kg (35 lb)
2. Subtract Occupant Weight @ 68 kg (150 lb) × 2 = 136 kg (300 lb)
3. Remaining available capacity for Cargo Weight = 301.2 kg (665 lb)

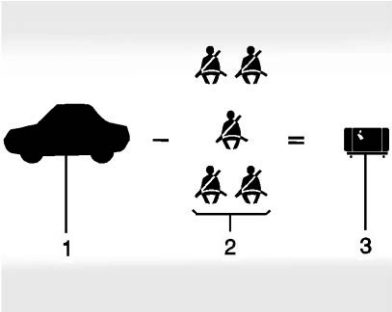

Example 2

1. Vehicle Capacity Weight for Example 2 = 453 kg (1,000 lb)

   Then subtrack Accessory Weight, for example a rooftop cargo box = 18.1 kg (40 lb)
2. Subtract Occupant Weight @ 68 kg (150 lb) × 5 = 340 kg (750 lb)
3. Remaining available capacity for Cargo Weight = 94.9 kg (210 lb)

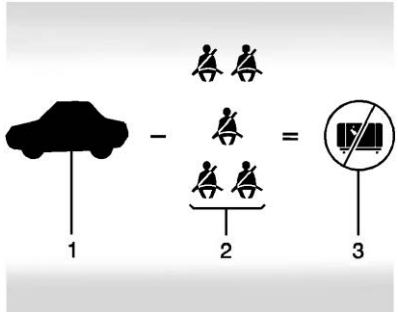

Example 3

1. Vehicle Capacity Weight for Example 3 = 453 kg (1,000 lb)
2. Subtract Occupant Weight @ 91 kg (200 lb) × 5 = 453 kg (1,000 lb)
3. Available Cargo Weight = 0 kg (0 lb)

Refer to the Tire and Loading Information label for specific information about the vehicle's capacity weight and seating positions. The combined weight of the driver, passengers, accessories, and cargo should never exceed the vehicle's capacity weight.

Certification/Tire Label

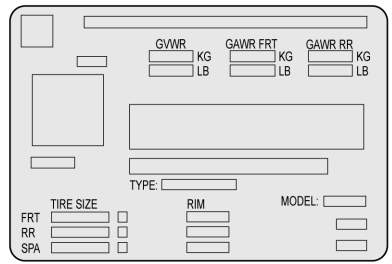

Label Example

A vehicle specific Certification/Tire label is attached to the edge of the driver side door. The label may show the size of the vehicle's original tires and the inflation pressures needed to obtain the gross weight capacity of the vehicle. This is called Gross Vehicle Weight Rating (GVWR). The GVWR includes the weight of the vehicle, all occupants, fuel, and cargo.

The Certification/Tire label may also show the maximum weights for the front and rear axles, called Gross Axle Weight Rating

(GAWR). To find out the actual loads on the front and rear axles, weigh the vehicle at a weigh station. Your dealer can help with this. Be sure to spread the load equally on both sides of the center line.

⚠ Warning

Things you put inside the vehicle can strike and injure people in a sudden stop or turn, or in a crash.

- Put things in the cargo area of the vehicle. Try to spread the weight evenly.
- Never stack heavier things, like suitcases, inside the vehicle so that some of them are above the tops of the seats.
- Do not leave an unsecured child restraint in the vehicle.
- When you carry something inside the vehicle, secure it whenever you can.

(Continued)

Warning (Continued)

- Do not leave a seat folded down unless you need to.

Add-On Equipment

Caution

Overloading the vehicle may cause damage. Repairs would not be covered by the vehicle warranty. Do not overload the vehicle.

When carrying removable items, a limit on how many people carried inside the vehicle may be necessary. Be sure to weigh the vehicle before buying and installing the new equipment.

Starting and Operating

New Vehicle Break-In

Caution

The vehicle does not need an elaborate break-in. But it will perform better in the long run if you follow these guidelines:

- Do not drive at any one constant speed, fast or slow, for the first 800 km (500 mi). Do not make full-throttle starts. Avoid downshifting to brake or slow the vehicle.
- Avoid making hard stops for the first 300 km (200 mi) or so. During this time the new brake linings are not yet broken in. Hard stops with new linings can mean premature wear and earlier replacement. Follow this breaking-in guideline every time you get new brake linings.
- Do not tow a trailer during break-in. See *General Towing Information* ➪ *152*.

Following break-in, engine speed and load can be gradually increased.

On new vehicles, the various mechanical and electrical systems experience a “break-in” period during the first 6 400 km (4,000 miles) of routine driving. As the vehicle is driven, the mechanical systems adjust to provide optimal fuel economy and transmission shift performance.

Electrical systems will adapt and calibrate during the break-in period. A one-time occurrence of clicks and similar vehicle noises is normal during this process.

Normal driving charges the vehicle’s battery to achieve the best operation of the vehicle, including fuel economy.

Ignition Positions

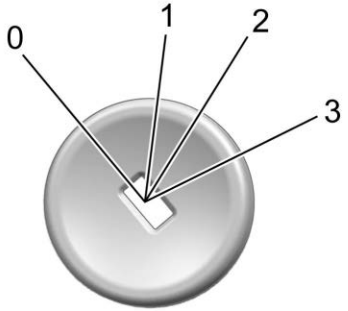

0. Stopping the Engine/LOCK/OFF
1. ACC/ACCESSORY
2. ON/RUN
3. START

The ignition switch has four positions.

To shift out of P (Park), the ignition must be in ON/RUN and the brake pedal must be applied.

0 (Stopping the Engine/LOCK/OFF): This position turns off the vehicle. It also locks the ignition, the transmission, and the steering column, if equipped with a locking steering column.

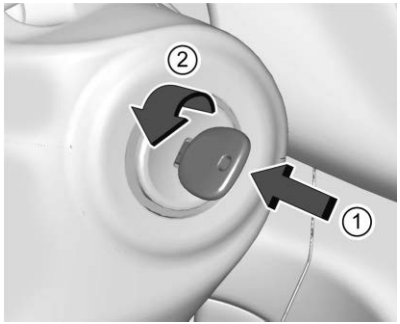

To turn off the vehicle:

1. Make sure that the vehicle is stopped.
2. Shift to P (Park).
3. Continue to hold the brake pedal, then set the parking brake. See *Parking Brake* ⇨ *137*.
4. Push the key all the way in toward the steering column (1), then turn the key to LOCK/OFF (2).
5. Remove the key.
6. Release the brake pedal.

See your dealer if the key can be removed in any other position.

Retained Accessory Power (RAP) will remain active. See *Retained Accessory Power (RAP)* ⇨ *130*.

A warning chime will sound when the driver door is opened and the key is in the ignition.

If equipped with a locking steering column, the steering can bind with the front wheels turned off center, which may prevent key rotation out of LOCK/OFF. If this happens, move the steering wheel from right to left while turning the key to ACC/ACCESSORY. If this does not work, then the vehicle needs service.

⚠ Warning

Turning off the vehicle while moving may cause loss of power assist in the brake and steering systems and disable the airbags. While driving, turn off the vehicle only in an emergency.

In an emergency, if the vehicle cannot be pulled over and must be turned off while driving:

1. Push the key all the way in toward the steering column, then turn the key to ACC/ACCESSORY.
2. Brake using firm and steady pressure. Do not pump the brakes repeatedly. This may deplete power assist, requiring increased brake pedal force.
3. Shift the vehicle to N (Neutral). This can be done while the vehicle is moving. Continue braking and steer the vehicle to a safe location.
4. Come to a complete stop.
5. Shift to P (Park).
6. Continue to hold the brake pedal, then set the parking brake. See *Parking Brake* ➪ *137*.
7. Push the key all the way in toward the steering column, then turn the ignition to LOCK/OFF.
8. Remove the key.
9. Release the brake pedal.

Caution

Use the correct key, make sure it is all the way in — or pushed all the way in toward the steering column when turning off the vehicle — and turn it only with your hand.

1 (ACC/ACCESSORY): This position allows features such as the infotainment system to operate while the vehicle is off. It also unlocks the steering column, if equipped with a locking steering column. Use this position if the vehicle must be pushed or towed. See *Retained Accessory Power (RAP)* ➪ *130*.

From ON/RUN, push the key all the way in toward the steering column, then turn the key to ACC/ACCESSORY.

If the key is left in ACC/ACCESSORY with the engine off, the battery could drain and the vehicle may not start.

A warning chime will sound when the driver door is opened and the key is in the ignition.

2 (ON/RUN): This position can be used to operate the electrical accessories and to display some instrument cluster warning and indicator lights. This position can also be used for service and diagnostics, and to verify the proper operation of the malfunction indicator light as may be required for emission inspection purposes. The switch stays in this position when the engine is running. The transmission is also unlocked in this position.

If the key is left in ON/RUN with the engine off, the battery could drain and the vehicle may not start.

3 (START): This is the position that starts the engine. When the engine starts, release the key. The ignition returns to ON/RUN for driving.

Starting the Engine

To place the transmission in the proper gear:

Move the shift lever to P (Park) or N (Neutral). The engine will not start in any other position. To restart the engine when the vehicle is already moving, use N (Neutral) only.

Caution

If you add electrical parts or accessories, you could change the way the engine operates. Any resulting damage would not be covered by the vehicle warranty. See *Add-On Electrical Equipment* ⇨ *153*.

Caution

Do not try to shift to P (Park) if the vehicle is moving. If you do, you could damage the transmission. Shift to P (Park) only when the vehicle is stopped.

Caution

If the steering wheel is turned until it reaches the end of its travel, and is held in that position while starting the vehicle, damage may occur to the hydraulic power steering system and there may be loss of power steering assist.

Starting Procedure

1. With your foot off the accelerator pedal, turn the ignition key to START. When the engine starts, let go of the key. The idle speed will go down as your engine gets warm. Do not race the engine immediately after starting it. Operate the engine and transmission gently to allow the oil to warm up and lubricate all moving parts.

   When the low fuel warning light is on and the FUEL LEVEL LOW message is displayed in the Driver Information Center (DIC), the Computer-Controlled Cranking System is disabled to prevent possible vehicle component damage. When this happens, hold the ignition switch in the START position to continue engine cranking.

Caution

Cranking the engine for long periods of time, by returning the ignition to the START position immediately after cranking has ended, can overheat and damage the cranking motor, and drain the battery. Wait at least 15 seconds between each try, to let the cranking motor cool down.

2. If the engine does not start after 5 to 10 seconds, especially in very cold weather (below −18 °C or 0 °F), it could be flooded with too much gasoline. Try pushing the accelerator pedal all the way to the floor and holding it there as you hold the key in START for up to 15 seconds. Wait at least 15 seconds between each try, to allow the cranking motor to cool down. When the engine starts, let go of the key and accelerator. If the vehicle starts briefly but then stops again, do the same thing. This clears the extra gasoline from the engine. Do not race the engine immediately after starting it. Operate the engine and transmission gently until the oil warms up and lubricates all moving parts.

Fast Idle System

If equipped, this feature is available only with cruise control. The manual fast idle switch is operated using the cruise control buttons on the left side of the steering wheel.

This system can be used to increase engine idle speed whenever the following conditions are met:

- The parking brake is set.

- The brake pedal is not pressed.
- The vehicle must not be moving and the accelerator must not be pressed.

To control the fast idle:

- To enable the Fast Idle System, press and release the cruise control on/off button and ensure that the switch indicator light is lit.
- Press and release the cruise control SET- button. Engine speed will be held at approximately 1200 rpm.

When the fast idle is active, the Driver Information Center (DIC) will display FAST IDLE ON.

One of the following actions will turn off the fast idle:

- Pressing the brake.
- Selecting the cruise control cancel button.
- Releasing the parking brake.
- Moving the transmission shift lever out of P (Park) or N (Neutral).
- Selecting the cruise control on/off button when it was previously on.
- Pressing the cruise control SET- button a second time.
- Pressing the accelerator more than one-quarter of the way down.
- Turning the ignition off.

Retained Accessory Power (RAP)

When the ignition is turned from on to off, the following features (if equipped) will continue to function for up to 10 minutes, or until the driver door is opened. These features will also work when the ignition is in RUN or ACC/ACCESSORY:

- Infotainment System
- Power Windows (during RAP this functionality will be lost when any door is opened)
- Sunroof (during RAP this functionality will be lost when any door is opened)
- Auxiliary Power Outlet
- Audio System
- OnStar System

Engine Coolant Heater

⚠ Warning

Do not plug in the engine block heater while the vehicle is parked in a garage or under a carport. Property damage or personal injury may result. Always park the vehicle in a clear open area away from buildings or structures.

If equipped, the engine coolant heater can provide easier starting and better fuel economy during engine warm-up in cold weather conditions at or below −18 °C (0 °F). Vehicles with an engine coolant heater should be plugged in at least four hours before starting. An internal thermostat in the plug end of the cord may exist which will prevent engine coolant heater operation at temperatures above −18 °C (0 °F).

To Use the Engine Coolant Heater

1. Turn off the engine.

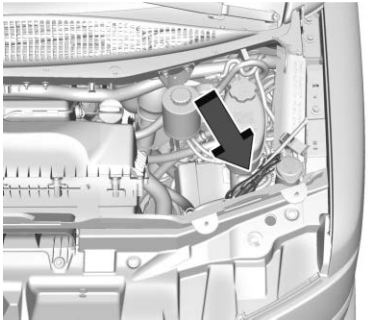

2. Open the hood and unwrap the electrical cord.

   The cord for the engine coolant heater is on the driver side of the engine compartment.

   Check the heater cord for damage. If it is damaged, do not use it. See your dealer for a replacement. Inspect the cord for damage yearly.

3. Plug it into a normal, grounded 110-volt AC outlet.

⚠ Warning

Improper use of the heater cord or an extension cord can damage the cord and may result in overheating and fire.

- Plug the cord into a three-prong electrical utility receptacle that is protected by a ground fault detection function. An ungrounded outlet could cause an electric shock.
- Use a weatherproof, heavy-duty, 15 amp-rated extension cord if needed. Failure to use the recommended extension cord in good operating condition, or using a damaged heater or extension cord, could make it overheat and cause a fire, property damage, electric shock, and injury.
- Do not operate the vehicle with the heater cord permanently attached to the vehicle. Possible heater cord and thermostat damage could occur.
- While in use, do not let the heater cord touch vehicle parts or sharp edges. Never close the hood on the heater cord.

(Continued)

Warning (Continued)

- Before starting the vehicle, unplug the cord, reattach the cover to the plug, and securely fasten the cord. Keep the cord away from any moving parts.

4. Before starting the engine, be sure to unplug and store the cord as it was before to keep it away from moving engine parts and prevent damage.

The length of time the heater should remain plugged in depends on several factors. Ask a dealer in the area where you will be parking the vehicle for the best advice on this.

Parking over Things That Burn

⚠ Warning

Things that can burn could touch hot exhaust parts under the vehicle and ignite. Do not park over papers, leaves, dry grass, or other things that can burn.

Engine Exhaust

⚠ Warning

Engine exhaust contains carbon monoxide (CO), which cannot be seen or smelled. Exposure to CO can cause unconsciousness and even death.

Exhaust may enter the vehicle if:

- The vehicle idles in areas with poor ventilation (parking garages, tunnels, deep snow that may block underbody airflow or tail pipes).
- The exhaust smells or sounds strange or different.
- The exhaust system leaks due to corrosion or damage.
- The vehicle exhaust system has been modified, damaged, or improperly repaired.
- There are holes or openings in the vehicle body from damage or aftermarket modifications that are not completely sealed.

(Continued)

Warning (Continued)

If unusual fumes are detected or if it is suspected that exhaust is coming into the vehicle:

- Drive it only with the windows completely down.
- Have the vehicle repaired immediately.

Never park the vehicle with the engine running in an enclosed area such as a garage or a building that has no fresh air ventilation.

Running the Vehicle While Parked

It is better not to park with the engine running.

If the vehicle is left with the engine running, follow the proper steps to be sure the vehicle will not move. See *Automatic Transmission* ⇨ *132* and *Engine Exhaust* ⇨ *132*.

If parking on a hill and pulling a trailer, see *General Towing Information* ⇨ *152*.

Automatic Transmission

A shift position indicator is in the instrument cluster.

P: This position locks the rear wheels. It is the best position to use when starting the engine because the vehicle cannot move easily. When parked on a hill, especially when the vehicle has a heavy load, you might notice an increase in the effort to shift out of P (Park).

⚠ Warning

It can be dangerous to leave the vehicle with the engine running. It could overheat and catch fire.

It is dangerous to get out of the vehicle if the vehicle is not in P (Park) with the parking brake set. The vehicle can roll.

(Continued)

Warning (Continued)

Do not leave the vehicle when the engine is running. If you have left the engine running, the vehicle can move suddenly. You or others could be injured. To be sure the vehicle will not move, even when you are on fairly level ground, always set the parking brake and shift to P (Park). If you are towing a trailer, see *General Towing Information* ⇨ *152*.

Shifting out of Park

The vehicle has an automatic transmission shift lock control system. You have to fully apply the brakes before you can shift from P (Park) when the ignition is on.

The shift lock control system is designed to:

- Prevent the ignition key from being removed unless the shift lever is in P (Park).
- Prevent movement of the shift lever out of P (Park), unless the ignition is on and the regular brake pedal is applied.

The shift lock control system is always functional except in the case of a dead battery or low voltage (less than 9 V) battery.

If the vehicle has an uncharged battery or a battery with low voltage, try charging or jump starting the battery. See *Jump Starting - North America* ⇨ *212*.

To shift out of P (Park):

1. Apply the brake pedal.
2. Turn the ignition on.
3. Move the shift lever to the desired position.

If you still are unable to shift out of P (Park):

1. Ease the pressure on the shift lever.
2. While holding down the brake pedal, push the shift lever all the way into P (Park).
3. Move the shift lever to the desired position.

If you are still having a problem shifting, have the vehicle serviced.

Shifting Into Park

1. Hold the brake pedal down, then set the parking brake.
2. Move the shift lever into the P (Park) position by pulling the shift lever toward you and moving it up as far as it will go.
3. Push the ignition key in, towards the steering column and then turn the ignition off.
4. Remove the key and take it with you. If you can leave the vehicle with the ignition key in your hand, the vehicle is in P (Park).

If you have to leave the vehicle with the engine running, be sure the vehicle is in P (Park) and the parking brake is firmly set. After the shift lever is moved into P (Park), hold the regular brake pedal down. Then, see if you can move the shift lever away from P (Park) without first pulling it toward you. If you can, it means that the shift lever was not fully locked into P (Park).

Torque Lock

If you are parking on a hill and you do not shift the transmission into P (Park) properly, the weight of the vehicle can put too much force on the parking pawl in the transmission. It might be difficult to pull the shift lever out of P (Park). This is called torque lock. To prevent torque lock, set the parking brake and then shift into P (Park) properly before you leave the driver seat. To find out how, see “Shifting Into Park” in this section.

When you are ready to drive, move the shift lever out of P (Park) before releasing the parking brake.

If torque lock does occur, you might need to have another vehicle push yours a little uphill to take some of the pressure from the parking pawl in the transmission. Then you should be able to pull the shift lever out of P (Park).

R: Use this gear to back up.

Caution

Shifting to R (Reverse) while the vehicle is moving forward could damage the transmission. The repairs would not be covered by the vehicle warranty. Shift to R (Reverse) only after the vehicle is stopped.

To rock the vehicle back and forth to get out of snow, ice, or sand without damaging the transmission, see *If the Vehicle Is Stuck* ⇨ *122*.

N: In this position, the engine does not connect with the wheels. To restart when you are already moving, use N (Neutral) only. Also, use N (Neutral) when the vehicle is being towed.

⚠ Warning

Shifting into a drive gear while the engine is running at high speed is dangerous. Unless your foot is firmly on the brake pedal, the vehicle could move very rapidly. You could lose control and hit people or objects. Do not shift into a drive gear while the engine is running at high speed.

Caution

Shifting out of P (Park) or N (Neutral) with the engine running at high speed may damage the transmission. The repairs would not be covered by the vehicle warranty. Be sure the engine is not running at high speed when shifting the vehicle.

Caution

A transmission hot message may display if the automatic transmission fluid is too hot. Driving under this condition can damage the vehicle. Stop and idle the engine to

(Continued)

Caution (Continued)

cool the automatic transmission fluid. This message clears when the transmission fluid has cooled sufficiently.

D: This position is for normal driving. It provides the best fuel economy. If you need more power for passing, and you are:

- Going less than about 55 km/h (35 mph), push the accelerator pedal about halfway down.
- Going about 55 km/h (35 mph) or more, push the accelerator all the way down.

  By doing this, the vehicle shifts down to the next gear and has more power.

D (Drive) can be used when towing a trailer, carrying a heavy load, or driving on steep hills. You might want to shift the transmission to a lower gear selection if the transmission shifts too often.

Downshifting the transmission in slippery road conditions could result in skidding. See "Skidding" under *Loss of Control* ⇨ *120*.

The vehicle has a shift stabilization feature that adjusts the transmission shifting to the current driving conditions in order to reduce rapid upshifts and downshifts. This shift stabilization feature is designed to determine, before making an upshift, if the engine is able to maintain vehicle speed by analyzing things such as vehicle speed, throttle position, and vehicle load. If the shift stabilization feature determines that a current vehicle speed cannot be maintained, the transmission does not upshift and instead holds the current gear. In some cases, this could appear to be a delayed shift, however the transmission is operating normally.

The transmission uses adaptive shift controls. Adaptive shift controls continually compare key shift parameters to pre-programmed ideal shifts stored in the transmission's computer. The transmission constantly makes adjustments to improve vehicle performance according to how the vehicle is being used, such as with a heavy load or when the temperature changes. During this adaptive shift control process, shifting might feel different as the transmission determines the best settings.

The shift quality of a new vehicle may not be ideal because the adaptive shift control process may not have determined the best settings for a particular shift or condition. Shift quality will improve with continued driving.

When temperatures are very cold, the transmission's gear shifting could be delayed, providing more stable shifts until the engine warms up. Shifts could be more noticeable with a cold transmission. This difference in shifting is normal.

M: This position lets drivers select the range of gears appropriate for current driving conditions. If the vehicle has this feature, see "Range Selection Mode" under *Manual Mode* ⇨ *136*.

1: This position reduces vehicle speed without using the brakes. You can use it for major/severe downgrades where the vehicle would otherwise accelerate due to steepness of grade. When you shift to 1 (First) it provides the lowest gear appropriate to current road speed and continues to downshift as the vehicle slows, eventually downshifting to 1 (First) gear. The transmission can be held in 1 (First) gear using Range Selection Mode or the shift lever. See "Range Selection Mode" under *Manual Mode* ⇨ *136*.

Caution

Spinning the tires or holding the vehicle in one place on a hill using only the accelerator pedal may damage the transmission. The repair will not be covered by the vehicle warranty. If the vehicle is stuck, do not spin the tires. When stopping on a hill, use the brakes to hold the vehicle in place.

Normal Mode Grade Braking

This mode is enabled when the vehicle is started, but is not enabled in Range Selection Mode. It assists in maintaining desired vehicle speeds when driving on downhill grades by using the engine and transmission to slow the vehicle. The first time the system activates for each ignition key cycle.

To disable or enable Normal Mode Grade Braking within the current ignition key cycle, press and hold the Tow/Haul button for three seconds.

For other forms of grade braking, see *Tow/Haul Mode* ⇨ *136* and *Cruise Control* ⇨ *140*.

Manual Mode

Range Selection Mode

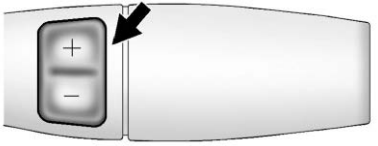

If equipped, Range Selection Mode helps control the vehicle's transmission and vehicle speed while driving downhill or towing a trailer by letting you select a desired range of gears.

To use this feature:

1. Move the shift lever to M (Manual Mode).
2. Press the +/– buttons on the shift lever to select the desired range of gears for current driving conditions.

When M (Manual Mode) is selected, the transmission will downshift and a number displays in the Driver Information Center (DIC) next to the M indicating the current gear.

This number is the highest gear that can be used. However, the vehicle can automatically shift to lower gears as it adjusts to driving conditions. This means that all gears below that number are available. When 5 (Fifth) is selected, 1 (First) through 5 (Fifth) gears are automatically shifted by the vehicle, but 6 (Sixth) cannot be used until the +/– button on the shift lever is used to change to the gear.

Grade Braking is not available when Range Selection Mode is active. See *Tow/Haul Mode* ⇨ *136*.

While using Range Selection Mode, cruise control and the Tow/Haul Mode can be used.

Caution
Spinning the tires or holding the vehicle in one place on a hill using only the accelerator pedal may damage the transmission. The repair will not be covered by the vehicle warranty. If the vehicle is stuck, do not spin the tires. When stopping on a hill, use the brakes to hold the vehicle in place.

Tow/Haul Mode

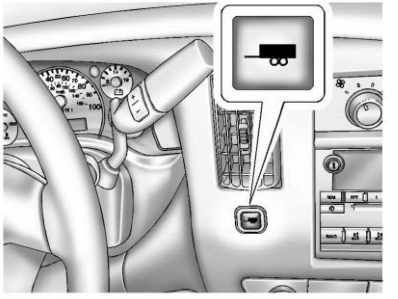

If equipped, Tow/Haul Mode adjusts the transmission shift pattern to reduce shift cycling, providing increased performance, vehicle control, and transmission cooling when towing or hauling heavy loads.

Turn the Tow/Haul Mode on and off by pressing the button on the instrument panel. When Tow/Haul is on, a light on the instrument cluster will come on.

See *Tow/Haul Mode Light* ⇨ *79* and *General Towing Information* ⇨ *152*.

Tow/Haul Mode Grade Braking

Tow/Haul Mode Grade Braking is only enabled while the Tow/Haul Mode is selected and the vehicle is not in the Range Selection Mode. See "Tow/Haul Mode" listed previously and *Manual Mode* ⇨ *136*. Tow/Haul Mode Grade Braking assists in maintaining desired vehicle speeds when driving on downhill grades by using the engine and transmission to slow the vehicle.

To disable or enable Tow/Haul Mode Grade Braking within the current ignition key cycle, press and hold the Tow/Haul button for three seconds.

See *General Towing Information* ⇨ *152*.

For other forms of grade braking, see *Automatic Transmission* ⇨ *132*.

Brakes

Antilock Brake System (ABS)

The Antilock Brake System (ABS) helps to prevent skidding and maintain steering control during hard breaking.

The Antilock Brake System (ABS) performs a system check when the vehicle is first driven. A momentary motor or clicking noise may be heard while this test is going on, and the brake pedal may move slightly. This is normal.

If there is a problem with the Antilock Brake System (ABS), this warning light stays on. See *Antilock Brake System (ABS) Warning Light* ⇨ *79*.

Using Antilock Brake

Do not pump the brakes. Just hold the brake pedal down firmly. It is normal to hear and feel the Antilock Brake System (ABS) operating.

Braking in Emergencies

The Antilock Brake System (ABS) does not always decrease stopping distance. If a vehicle suddenly slows or stops, there may not be enough time to apply the brakes. Always allow enough following distance between your vehicle and the vehicle ahead.

The Antilock Brake System (ABS) allows you to steer and brake at the same time. In many emergencies, steering to make an evasive maneuver can be more effective than braking.

Regional regulations may require taillights to flash when an emergency brake event is experienced.

Parking Brake

Caution
Driving with the parking brake on can overheat the brake system and cause premature wear or damage to brake system parts. Make sure that the parking brake is fully released and the brake warning light is off before driving.

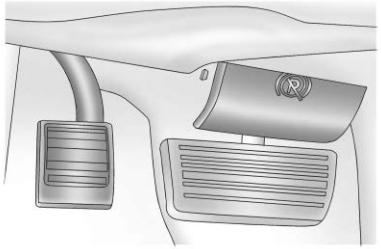

To set the parking brake:

1. Hold the regular brake pedal down.
2. Firmly push the parking brake pedal down.
3. The brake system warning light will come on, if the ignition is on. See *Brake System Warning Light* ⇨ *78*.

If you are towing a trailer and parking on a hill, see *General Towing Information* ⇨ *152*.

To release the parking brake:

1. Hold the regular brake pedal down.
2. Pull the handle with the parking brake symbol, located above the parking brake pedal.
3. The brake system warning light will turn off if the ignition is on.

Driving with the parking brake applied will cause an audible alert to sound and a Driver Information Center message may display. Release the parking brake or stop the vehicle.

Brake Assist

Brake Assist detects rapid brake pedal applications due to emergency braking situations. It also provides additional braking to activate the Antilock Brake System if the brake pedal is not applied hard enough to activate it normally. Minor noise, brake pedal pulsation, and/or pedal movement during this time may occur. Continue to apply the brake pedal as the driving situation dictates. Brake Assist disengages when the brake pedal is released.

Hill Start Assist (HSA)

⚠ Warning

Do not rely on the HSA feature. HSA does not replace the need to pay attention and drive safely. You may not hear or feel

(Continued)

Warning (Continued)

alerts or warnings provided by this system. Failure to use proper care when driving may result in injury, death, or vehicle damage. See *Defensive Driving* ⇨ *117*.

When the vehicle is stopped on a grade, Hill Start Assist (HSA) temporarily prevents the vehicle from rolling in an unintended direction during the transition from brake pedal release to accelerator pedal apply. The brakes release when the accelerator pedal is applied or automatically release after a few seconds. The brakes may also release under other conditions. Do not rely on HSA to hold the vehicle.

HSA is available when the vehicle is facing uphill in a forward gear, or when facing downhill in R (Reverse). The vehicle must come to a complete stop on a grade for HSA to activate.

Ride Control Systems

Traction Control/Electronic Stability Control

This vehicle has a Traction Control System and a StabiliTrak/Electronic Stability Control system. These systems help limit wheel spin and assist the driver in maintaining control, especially on slippery road conditions. Both systems turn on automatically when the vehicle is started and begins to move.

The Traction Control System activates if any of the drive wheels are spinning and beginning to lose traction. If this happens, the traction system reduces power and applies the brakes to limit wheel spin.

The StabiliTrak/Electronic Stability Control system activates when the vehicle senses a difference between the intended path and the direction the vehicle is actually traveling. The stability control system selectively applies braking pressure to any one of the vehicle wheel brakes to assist the driver in keeping the vehicle on the intended path.

The systems may be heard or felt while they are operating or while performing diagnostic checks. This is normal and does not mean there is a problem with the vehicle.

It is recommended to leave both systems on for normal driving conditions, but it may be necessary to turn the Traction Control System off if the vehicle gets stuck in sand, mud, ice, or snow. See *If the Vehicle Is Stuck* ⇨ *122* and "Turning the Systems Off and On" later in this section.

If equipped, Trailer Sway Control turns on automatically when the vehicle is started. See *General Towing Information* ⇨ *152*.

Cruise control will disengage if the traction or stability control system begins to limit wheel spin. Cruise control may be turned back on when road conditions allow. See *Cruise Control* ⇨ *140*.

The indicator light for both systems is in the instrument cluster. This light will:

- Flash when the Traction Control System is limiting wheel spin.
- Flash when the StabiliTrak/Electronic Stability Control system is activated.
- Turn on and stay on when either system is not working.

See *Traction Control System (TCS)/Electronic Stability Control Light* ⇨ *80*.

If either system fails to turn on or to activate, a message displays in the Driver Information Center. The vehicle is safe to drive, but adjust driving accordingly.

If turns on and stays on:

1. Stop the vehicle.
2. Turn the engine off and wait 15 seconds.
3. Start the vehicle.
4. Drive the vehicle.

If stays on, the vehicle may need more time to diagnose the problem. If the condition persists, see your dealer.

Turning the Systems Off and On

Caution

Do not repeatedly brake or accelerate heavily when the Traction Control System is off. The vehicle driveline could be damaged.

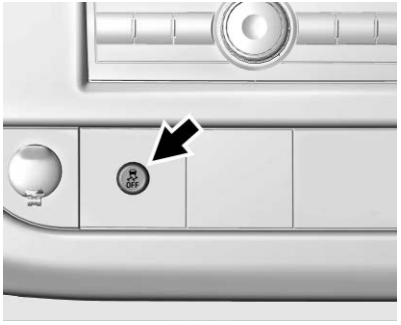

To turn off only the Traction Control System, press and release OFF. A message displays in the Driver Information Center. To turn the system on again, press and release OFF.

If the traction system is limiting wheel spin when OFF is pressed, the system will not turn off until the wheels stop spinning.

To turn off both the Traction Control System and StabiliTrak/Electronic Stability Control system, press and hold OFF until the StabiliTrak/Electronic Stability Control Off light OFF turns on and stays on in the instrument cluster, then release. See *Electronic Stability Control (ESC) Off Light* ⇨ *80*.

To turn the systems on again, press and release OFF. The StabiliTrak/Electronic Stability Control Off light OFF in the instrument cluster turns off.

The Traction Control System cannot be engaged when StabiliTrak/Electronic Stability Control is off.

The StabiliTrak/Electronic Stability Control system will automatically turn back on if the vehicle exceeds 32 km/h (20 mph). The Traction Control System will remain off until OFF is pressed or the vehicle is turned off then on.

Adding accessories can affect the vehicle performance. See *Accessories and Modifications* ⇨ *155*.

Locking Rear Axle

Vehicles with a locking rear axle can give more traction on snow, mud, ice, sand, or gravel. It works like a standard axle most of the time, but when traction is low, this feature will allow the rear wheel with the most traction to move the vehicle.

Cruise Control

⚠ Warning

Cruise control can be dangerous where you cannot drive safely at a steady speed. Do not use cruise control on winding roads or in heavy traffic.

Cruise control can be dangerous on slippery roads. On such roads, fast changes in tire traction can cause excessive wheel slip, and you could lose control. Do not use cruise control on slippery roads.

If equipped, cruise control allows the vehicle to maintain a set speed of 40 km/h (25 mph) or more without active acceleration. Cruise control does not work at speeds below 40 km/h (25 mph).

Cruise control will disengage if:

- The Traction Control System (TCS) or StabiliTrak/Electronic Stability Control system begins to limit wheel spin. See *Traction Control/Electronic Stability Control* ⇨ *139*.
- The brakes are applied.

When road conditions allow you to safely use it again, cruise control can be turned back on.

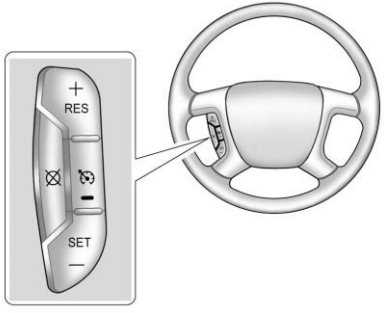

: Press to turn cruise control on or off. The white indicator light comes on in the instrument cluster when cruise control is turned on.

+RES: If there is a set speed in memory, press briefly to resume that speed or press and hold to accelerate. If cruise control is already engaged, use to increase vehicle speed.

SET–: Press briefly to set the speed and engage cruise control. If cruise control is already engaged, use to decrease vehicle speed.

: Press to disengage cruise control without erasing the set speed from memory.

Setting Cruise Control

If cruise control is on but is not engaged, SET– or +RES could be pressed and engage cruise control when not desired. Keep cruise control off when it is not being used. Press to turn off cruise control.

To set the cruise speed:

1. Press .
2. Accelerate to the desired speed.
3. Press SET–.
4. Gently remove your foot from the accelerator pedal.

When cruise control is engaged, the cruise control indicator light displays green on the instrument cluster. See *Instrument Cluster* ⇨ *71*.

Resuming a Set Speed

If cruise control is engaged and then the brakes are applied or is pressed, cruise control is disengaged without erasing the set speed from memory.

Once the vehicle speed reaches about 40 km/h (25 mph) or more, briefly press +RES to engage cruise control at the previous set speed.

Increasing Speed While Using Cruise Control

If cruise control is already engaged:

- Press and hold +RES until the desired speed is reached, then release it.
- To increase the vehicle speed in small increments, briefly press +RES. For each press, the vehicle speed increase by about 1 km/h (1 mph).

The speedometer reading can be displayed in either English or metric units. See *Driver Information Center (DIC)* ⇨ *82*. The increment value used depends on the units displayed.

Reducing Speed While Using Cruise Control

If cruise control is already engaged:

- Press and hold SET– until the desired lower speed is reached, then release it.

- To decrease the vehicle speed in small increments, briefly press SET–. For each press, the vehicle speed decreases by about 1 km/h (1 mph).

Passing Another Vehicle While Using Cruise Control

While cruise control is engaged, use the accelerator pedal to increase the vehicle speed. When you remove your foot from the accelerator pedal, the vehicle will slow down to the previously set cruise speed. While pressing the accelerator pedal, or shortly following the release to override cruise control, briefly pressing SET– will result in the cruise speed being set to the current vehicle speed.

Using Cruise Control on Hills

How well cruise control works on a hill depends on the vehicle speed, load, and the steepness of the hill. When driving up a steep hill, you may need to apply the accelerator pedal to maintain the cruise speed. When driving down a steep hill, you may need to apply the brake pedal or shift to a lower gear to keep the vehicle speed down. If the brake pedal is applied, cruise control will disengage.

Ending Cruise Control

There are four ways to end cruise control:

- Lightly apply the brake pedal.
- Press ⊗.
- Shift the transmission to N (Neutral).
- Press .

Erasing Speed Memory

The cruise control set speed is erased from memory if is pressed or when the vehicle is turned off.

Driver Assistance Systems

This vehicle may have features that work together to help avoid crashes or reduce crash damage while driving, backing, and parking. Read this entire section before using these systems.

⚠ Warning

Do not rely on the Driver Assistance Systems. These systems do not replace the need for paying attention and driving

(Continued)

Warning (Continued)

safely. You may not hear or see alerts or warnings provided by these systems. Failure to use proper care when driving may result in injury, death, or vehicle damage. See *Defensive Driving* ➪ *117*.

Under many conditions, these systems will not:

- Detect children, pedestrians, bicyclists, or animals.
- Detect vehicles or objects outside the area monitored by the system.
- Work at all driving speeds.
- Warn you or provide you with enough time to avoid a crash.
- Work under poor visibility or bad weather conditions.
- Work if the detection sensor is not cleaned or is covered by ice, snow, mud, or dirt.

(Continued)

Warning (Continued)

- Work if the detection sensor is covered up, such as with a sticker, magnet, or metal plate.
- Work if the area surrounding the detection sensor is damaged or not properly repaired.

Complete attention is always required while driving, and you should be ready to take action and apply the brakes and/or steer the vehicle to avoid crashes.

Audible Alert

Some driver assistance features alert the driver of obstacles by beeping. To view available settings from the Driver Information Center (DIC) press to enter the feature settings menu.

Cleaning

Depending on vehicle options, keep these areas of the vehicle clean to ensure the best driver assistance feature performance. Driver Information Center (DIC) messages may display when the systems are unavailable or blocked.

- Front and rear bumpers and the area below the bumpers
- Front grille and headlights
- Front camera lens in the front grille or near the front emblem
- Front side and rear side panels
- Outside of the windshield in front of the rearview mirrors
- Side camera lens on the bottom of the outside mirrors
- Rear side corner bumpers
- Rear Vision Camera above the license plate

Radio Frequency

This vehicle may be equipped with driver assistance systems that operate using radio frequency. See *Radio Frequency Statement* ⇨ *246*.

Rear Vision Camera (RVC)

⚠ Warning

The camera(s) do not display children, pedestrians, bicyclists, crossing traffic, animals, or any other object outside of the cameras' field of view, below the bumper, or under the vehicle. Shown distances

(Continued)

Warning (Continued)

may be different from actual distances. Do not drive or park the vehicle using only these camera(s). Always check behind and around the vehicle before driving. Failure to use proper care may result in injury, death, or vehicle damage.

When the vehicle is shifted into R (Reverse), the RVC displays an image of the area behind the vehicle on the rearview mirror. The previous view displays when the vehicle is shifted out of R (Reverse) after a short delay. To return to the previous view sooner, shift into P (Park), or reach a vehicle speed of approximately 12 km/h (8 mph) while in D (Drive).

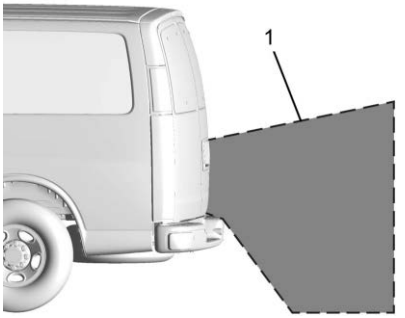

1. View displayed by the camera

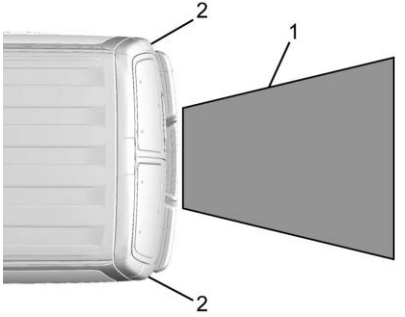

1. View displayed by the camera
2. Corners of the rear bumper

Displayed images may be farther or closer than they appear. The area displayed is limited and objects that are close to either corner of the bumper or under the bumper do not display.

A warning triangle may appear on the rearview mirror to show that Rear Park Assist (RPA) or Rear Cross Traffic Alert (RCTA) has detected an object. This triangle changes from amber to red and increases in size the closer the object.

Park Assist

If equipped, the Rear Park Assist (RPA) system uses sensors on the rear bumper to assist with parking and avoiding objects while in R (Reverse).

⚠ Warning

The Park Assist System is no substitute for careful and attentive driving. The Park Assist system does not detect children, pedestrians, bicyclists, animals, or objects located below the bumper or that are too close or too far from the vehicle. It is not available at speeds greater than 9 km/h (6 mph). To prevent injury, death, or vehicle

(Continued)

Warning (Continued)

damage, even with Park Assist, always check the area around the vehicle and check all mirrors before moving forward or backing.

How the System Works

RPA comes on automatically when the shift lever is moved into R (Reverse). A single beep sounds to indicate the system is working.

RPA operates only at speeds less than 9 km/h (6 mph).

An obstacle detection is indicated by beeps. The time between beeps gets shorter as the vehicle approaches the obstacle. Repeated beeps are heard when the distance is less than 30 cm (12 in).

To be detected, objects must be at least 25 cm (10 in) off the ground and below rear door level. Objects must also be within 2.5 m (8 ft) from the rear bumper. This distance may be less during warmer or humid weather.

Turning the System On and Off

The system can be disabled through the Driver Information Center (DIC). See "Park Assist" under *Driver Information Center (DIC)* ⇨ *82*.

RPA defaults to the on setting each time the vehicle is started.

Turn RPA off when towing a trailer.

When the System Does Not Seem to Work Properly

The following messages may be displayed on the DIC:

SERVICE PARK ASSIST: If this message occurs, take the vehicle to your dealer for repair.

PARK ASSIST OFF: This message occurs if the driver disables the system or if the vehicle is driven above 9 km/h (6 mph) in R (Reverse).

PARK ASST BLOCKED SEE OWNERS MANUAL: This message can occur under the following conditions:

- The sensors are not clean. Keep the rear bumper free of mud, dirt, snow, ice, slush, and frost. The message may not clear until frost or ice has melted all around and inside the sensor.
- A trailer is attached to the vehicle, or a bicycle or an object hanging out of the rear door during the current or last drive cycle. RPA will return to normal operation after it is determined the object is removed. This could take a few drive cycles.
- A tow bar is attached to the vehicle.

Other conditions may affect system performance, such as vibrations from a jackhammer or the compression of air brakes on a very large truck.

Forward Collision Alert (FCA) System

⚠ Warning

FCA is a warning system and does not apply the brakes. When approaching a slower-moving or stopped vehicle ahead too rapidly, or when following a vehicle too closely, FCA may not provide a warning with enough time to help avoid a crash. It also may not provide any warning at all. FCA does not warn of pedestrians, animals,

(Continued)

Warning (Continued)

signs, guardrails, bridges, construction barrels, or other objects. Be ready to take action and apply the brakes. See *Defensive Driving* ⇨ *117*.

⚠ Warning

FCA does not provide a warning to help avoid a crash, unless it detects a vehicle. FCA may not detect a vehicle ahead if the FCA sensor is blocked by dirt, snow, or ice, or if the windshield is damaged. It may also not detect a vehicle on winding or hilly roads, or in conditions that can limit visibility such as fog, rain, or snow, or if the headlights or windshield are not cleaned or in proper condition. Keep the windshield, headlights, and FCA sensors clean and in good repair.

If equipped, the FCA system may help to avoid or reduce the harm caused by front-end crashes. When approaching a vehicle ahead too quickly, FCA provides a red flashing alert on the windshield and rapidly beeps. FCA also lights an amber visual alert if following another vehicle much too closely.

FCA detects vehicles within a distance of approximately 60 m (197 ft) and operates at speeds above 8 km/h (5 mph).

FCA can be disabled with the button on the center stack.

Detecting the Vehicle Ahead

FCA warnings will not occur unless the FCA system detects a vehicle ahead. When a vehicle is detected, the vehicle ahead indicator will display green. Vehicles may not be detected on curves, highway exit ramps, or hills, due to poor visibility; or if a vehicle ahead is partially blocked by pedestrians or other objects. FCA will not detect another vehicle ahead until it is completely in the driving lane.

Collision Alert

When your vehicle approaches another detected vehicle too rapidly, the red FCA display will flash on the windshield. Also, eight rapid high-pitched beeps will sound from the front. When this Collision Alert occurs, the brake system may prepare for driver braking to occur more rapidly which can cause a brief, mild deceleration. Continue to apply the brake pedal as needed. Cruise control may be disengaged when the Collision Alert occurs.

Tailgating Alert

The vehicle ahead indicator will display amber when you are following a vehicle much too closely.

Selecting the Alert Timing

The Collision Alert button is on the center stack. Press to set the alert timing to Far, Medium, Near, or Off. The first button press shows the current control setting on the DIC. Additional button presses will change this setting. The chosen setting will remain until it is changed and will affect the timing of both the Collision Alert and the Tailgating Alert features. The timing of both alerts will vary based on vehicle speed. The faster the vehicle speed, the farther away the alert will occur. Consider traffic and weather conditions when selecting the alert timing. The range of selectable alert timings may not be appropriate for all drivers and driving conditions.

Unnecessary Alerts

FCA may provide unnecessary alerts for turning vehicles, vehicles in other lanes, objects that are not vehicles, or shadows. These alerts are normal operation and the vehicle does not need service.

Cleaning the System

If the FCA system does not seem to operate properly, this may correct the issue.

- Clean the outside of the windshield in front of the rearview mirror.
- Clean the entire front of the vehicle.
- Clean the headlights.

Side Blind Zone Alert (SBZA)

If equipped, the Side Blind Zone Alert (SBZA) system is a lane-changing aid that assists drivers with avoiding crashes that occur with moving vehicles in the side blind zone, or blind spot areas. The SBZA warning display will light up in the corresponding outside side mirror and will flash if the turn signal in corresponding side is on.

Warning

SBZA does not alert the driver to vehicles rapidly approaching outside of the side blind zones, pedestrians, bicyclists, or animals. It may not provide alerts when changing lanes under all driving conditions. Failure to use proper care when changing lanes may result in injury, death, or vehicle damage. Before making a lane change, always check mirrors, glance over your shoulder, and use the turn signals.

SBZA Detection Zones

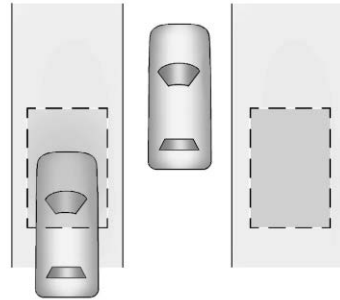

The SBZA sensor covers a zone of approximately one lane over from both sides of the vehicle, or 3.5 m (11 ft). The height of the zone is approximately between 0.5 m (1.5 ft) and 2 m (6 ft) off the ground. This zone starts at approximately the middle of the vehicle and goes back 5 m (16 ft).

How the System Works

The SBZA symbol lights up in the side mirrors when the system detects a moving vehicle in the next lane over that is in the side blind zone. This indicates it may be unsafe to change

lanes. Before making a lane change, check the SBZA display, check mirrors, glance over your shoulder, and use the turn signals.

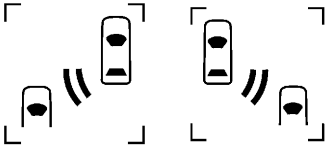

Left Side Mirror Display **Right Side Mirror Display**

When the vehicle is started, both outside mirror SBZA displays will briefly come on to indicate the system is operating. When the vehicle is in a forward gear, the left or right side mirror display will light up if a moving vehicle is detected in that blind zone. If the turn signal is activated in the same direction as a detected vehicle, this display will flash as an extra warning not to change lanes.

SBZA can be disabled through the Driver Information Center (DIC). See *Driver Information Center (DIC)* ➪ *82*. If SBZA is disabled by the driver, the SBZA mirror displays will not light up.

When the System Does Not Seem to Work Properly

SBZA displays may not come on when passing a vehicle quickly, or for a stopped vehicle. SBZA may alert to objects attached to the vehicle, such as a bicycle, or object extending out to either side of the vehicle. This is normal system operation; the vehicle does not need service.

SBZA may not always alert the driver to vehicles in the side blind zone, especially in wet conditions. The system does not need to be serviced. The system may light up due to guardrails, signs, trees, shrubs, and other non-moving objects. This is normal system operation; the vehicle does not need service.

SBZA may not operate when the SBZA sensors in the left or right corners of the rear bumper are covered with mud, dirt, snow, ice, or slush, or in heavy rainstorms. For cleaning instructions, see "Washing the Vehicle" under *Exterior Care* ➪ *216*. If the DIC displays the system unavailable message after cleaning both sides of the vehicle toward the rear corners of the vehicle, see your dealer.

If the SBZA displays do not light up when vehicles are in the blind zone and the system is clean, the system may need service. Take the vehicle to your dealer.

When SBZA is disabled for any reason other than the driver turning it off, the Side Blind Zone Alert On option will not be available on the personalization menu.

Driving with a Trailer

Use caution while changing lanes when towing a trailer.

Radio Frequency Information

See *Radio Frequency Statement* ➪ *246*.

Lane Departure Warning (LDW)

If equipped, LDW may help avoid crashes due to unintentional lane departures. LDW uses a camera sensor to detect the lane markings at speeds of 56 km/h (35 mph) or greater. It may provide an alert if the vehicle is crossing a lane without using a turn signal in that direction. LDW light will not alert if the turn signal is active in the direction of lane departure, or if LDW detects that you are accelerating, braking or actively steering.

Warning

The LDW system does not steer the vehicle. The LDW system may not:

- Provide enough time to avoid a crash.
- Detect lane markings under poor weather or visibility conditions. This can occur if the windshield or headlights are blocked by dirt, snow, or ice; if they are not in proper condition; or if the sun shines directly into the camera.
- Detect road edges.
- Detect lanes on winding or hilly roads.

If LDW only detects lane markings on one side of the road, it will only warn you when departing the lane on the side where it has detected a lane marking. Always keep your attention on the road and maintain proper vehicle position within the lane, or vehicle damage, injury, or death could occur. Always keep the windshield, headlights, and camera sensors clean and in good repair. Do not use LDW in bad weather conditions.

How the System Works

LDW utilizes a camera sensor installed on the windshield ahead of the rearview mirror to detect lane markings.

To turn LDW on and off, press on the center stack. The control indicator will light when LDW is on. When LDW is on, is green if LDW is available to warn of a lane departure. If the vehicle crosses a detected lane marking without using the turn signal in that direction, changes to amber and flashes. Additionally, there will be three beeps on the right or left, depending on the lane departure direction. LDW will not alert if the turn signal is active in the direction of lane departure, or if LDW detects that you are accelerating, braking or actively steering.

Fuel

Top Tier Fuel

GM recommends the use of TOP TIER Approved Gasoline to keep the engine clean, reduce engine deposits, and maintain optimal vehicle performance. Look for the TOP TIER Logo or see www.toptiergas.com for a list of TOP TIER Approved Gasoline marketers and applicable countries.

Recommended Fuel

Regular unleaded gasoline meeting ASTM specification D4814 with a posted octane rating (R+M)/2 of 87 or greater is recommended. Do not use gasoline with a posted octane rating of less than 87, as this will result in reduced performance and driveability. If heavy knocking is heard when using gasoline rated at 87 or greater, the engine needs service.

Do not use any fuel labeled E85 or FlexFuel. Do not use gasoline with ethanol levels greater than 15% by volume.

Prohibited Fuels

Caution

Do not use fuels with any of the following conditions; doing so may damage the vehicle and void its warranty:

(Continued)

Caution (Continued)

- For vehicles that are not FlexFuel, fuel labeled greater than 15% ethanol by volume, such as mid-level ethanol blends (16–50% ethanol), E85, or FlexFuel.
- Fuel with any amount of methanol, methylal, ferrocene, and aniline. These fuels can corrode metal fuel system parts or damage plastic and rubber parts.
- Fuel containing metals such as methylcyclopentadienyl manganese tricarbonyl (MMT), which can damage the emissions control system and spark plugs.
- Fuel with a posted octane rating of less than the recommended fuel. Using this fuel will lower fuel economy and performance, and may decrease the life of the emissions catalyst.

Fuels in Foreign Countries

The U.S., Canada, and Mexico post fuel octane ratings in Anti-Knock Index (AKI). For fuel not to use in a foreign country, see *Prohibited Fuels* ⇨ *150*.

Fuel Additives

TOP TIER Approved Gasoline is highly recommended for use with your vehicle. If your country does not have TOP TIER Approved Gasoline, add ACDelco Fuel System Cleaner to the vehicle's gasoline fuel tank at every oil change or 12 000 km (7,500 mi), whichever occurs first. TOP TIER Approved Gasoline and ACDelco Fuel System Cleaner will help keep your vehicle's engine fuel deposit free and performing optimally.

Filling the Tank

An arrow on the fuel gauge indicates which side of the vehicle the fuel door is on. See *Fuel Gauge* ⇨ *72*.

⚠ Warning

Fuel vapors and fuel fires burn violently and can cause injury or death.

Follow these guidelines to help avoid injuries to you and others:

- Read and follow all the instructions on the fuel pump island.
- Turn off the engine when refueling.
- Keep sparks, flames, and smoking materials away from fuel.
- Do not leave the fuel pump unattended.
- Avoid using electronic devices while refueling.
- Do not re-enter the vehicle while pumping fuel.
- Keep children away from the fuel pump and never let children pump fuel.
- Before touching the fill nozzle, touch a metallic object to discharge static electricity from your body.

(Continued)

Warning (Continued)

- Fuel can spray out if the fuel cap is opened too quickly. This spray can happen if the tank is nearly full, and is more likely in hot weather. Open the fuel cap slowly and wait for any hiss noise to stop, then unscrew the cap all the way.

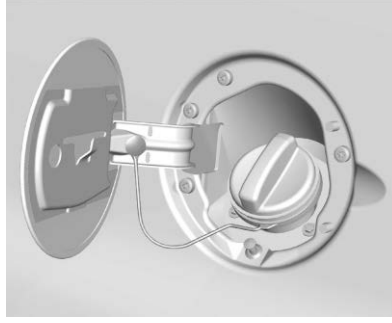

Turn the fuel cap counterclockwise to remove. When refueling, hang the fuel cap from the hook on the fuel door. Fully insert and latch the fill nozzle, begin fueling.

⚠ Warning

Overfilling the fuel tank by more than three clicks of a standard fill nozzle may cause:

- Vehicle performance issues, including engine stalling and damage to the fuel system.
- Fuel spills.
- Under certain conditions, fuel fires.

Be careful not to spill fuel. Wait five seconds after you have finished pumping before removing the fill nozzle. Clean fuel from painted surfaces as soon as possible. See *Exterior Care* ➪ *216*. Reinstall the cap by turning it clockwise until it clicks. Push the fuel door closed.

⚠ Warning

If a fire starts while you are refueling, do not remove the fill nozzle. Shut off the flow of fuel by shutting off the pump or by notifying the station attendant. Leave the area immediately.

Caution

If a new fuel cap is needed, get the right type of cap from your dealer. The wrong type of fuel cap may not fit properly, may turn on the malfunction indicator light, and could damage the fuel system and emissions system. See *Malfunction Indicator Light (Check Engine Light)* ⇨ *77*.

Filling a Portable Fuel Container

⚠ Warning

Never fill a portable fuel container while it is in the vehicle. Static electricity discharge from the container can ignite the fuel vapor. You or others could be badly burned and the vehicle could be damaged. To help avoid injury to you and others:

- Dispense fuel only into approved containers.

(Continued)

Warning (Continued)

- Do not fill a container while it is inside a vehicle, in a vehicle's trunk, in a pickup bed, or on any surface other than the ground.
- Bring the fill nozzle in contact with the inside of the fill opening before operating the nozzle. Maintain contact until filling is complete.
- Keep sparks, flames, and smoking materials away from fuel.
- Avoid using electronic devices while pumping fuel.

Trailer Towing

General Towing Information

⚠ Warning

You can lose control when towing a trailer if the correct equipment is not used or the vehicle is not driven properly. For example, if the trailer is too heavy or the trailer brakes

(Continued)

Warning (Continued)

are inadequate for the load, the vehicle may not stop as expected. You and others could be seriously injured. The vehicle may also be damaged, and the repairs would not be covered by the vehicle warranty. Pull a trailer only if all the steps in the Trailer Towing Supplement have been followed. Ask your dealer for advice and information about towing a trailer with the vehicle.

To find detailed preparation information, refer to the Trailer Towing Supplement online at:

For United States: www.chevrolet.com/support/vehicle/manuals-guides

For Canada: www.chevrolet.ca/en/support/vehicle/manuals-guides

For Mexico: my.gm.com.mx/chevrolet/es/ayuda-y-soporte/manual

To tow a disabled vehicle, see *Transporting a Disabled Vehicle* ⇨ *215*.

To tow the vehicle behind another vehicle such as a motor home, see *Recreational Vehicle Towing* ⇨ *216*.

Conversions and Add-Ons

Add-On Electrical Equipment

⚠ Warning

The Data Link Connector is used for vehicle service and Emission Inspection/ Maintenance testing. See *Malfunction Indicator Light (Check Engine Light)* ⇨ *77*. A device connected to the Data Link Connector — such as an aftermarket fleet or driver-behavior tracking device — may interfere with vehicle systems. This could affect vehicle operation and cause a crash. Such devices may also access information stored in the vehicle's systems.

Caution

Some electrical equipment can damage the vehicle or cause components to not work and would not be covered by the vehicle warranty. Always check with your dealer before adding electrical equipment.

Add-on equipment can drain the vehicle's 12-volt battery, even if the vehicle is not operating.

The vehicle has an airbag system. Before attempting to add anything electrical to the vehicle, see *Servicing the Airbag-Equipped Vehicle* ⇨ *42* and *Adding Equipment to the Airbag-Equipped Vehicle* ⇨ *43*.

Vehicle Care

General Information
General Information 155
California Perchlorate Materials Requirements 155
Accessories and Modifications 155

Vehicle Checks
Doing Your Own Service Work 155
Hood 156
Engine Compartment Overview 158
Engine Oil 161
Engine Oil Life System 163
Automatic Transmission Fluid 164
Engine Air Cleaner/Filter 164
Cooling System 165
Engine Overheating 168
Engine Fan 169
Power Steering Fluid 170
Washer Fluid 170
Brakes 171
Brake Fluid 172
Battery - North America 173
Rear Axle 173
Noise Control System 174
Starter Switch Check 174
Automatic Transmission Shift Lock Control Function Check 175
Ignition Transmission Lock Check 175
Park Brake and P (Park) Mechanism Check 175
Wiper Blade Replacement 176
Windshield Replacement 176

Headlight Aiming
Front Headlight Aiming 176

Bulb Replacement
Bulb Replacement 176
Halogen Bulbs 177
Front Turn Signal, Sidemarker, and Parking Lights 177
Taillights 177
Center High-Mounted Stoplight 178
License Plate Lights 179

Electrical System
Electrical System Overload 179
Fuses and Circuit Breakers 180
Engine Compartment Fuse Block 180
Floor Console Fuse Block 185

Wheels and Tires
Tires 187
All-Season Tires 188
Winter Tires 188
Tire Sidewall Labeling 189
Tire Designations 190
Tire Terminology and Definitions 190
Tire Pressure 192
Tire Pressure Monitor System 193
Tire Pressure Monitor Operation 194
Tire Inspection 196
Tire Rotation 197
When It Is Time for New Tires 198
Buying New Tires 199
Different Size Tires and Wheels 200
Uniform Tire Quality Grading 200
Wheel Alignment and Tire Balance 201
Wheel Replacement 202
Tire Chains and Other Traction Devices 202
If a Tire Goes Flat 203
Tire Changing 204
Full-Size Spare Tire 212

Jump Starting
Jump Starting - North America 212

Towing the Vehicle
Transporting a Disabled Vehicle 215
Recreational Vehicle Towing 216

Appearance Care
Exterior Care 216
Interior Care 220
Floor Mats 223

General Information

For service and parts needs, visit your dealer. You will receive genuine GM parts and GM-trained and supported service people.

Genuine GM parts have one of these marks:

California Perchlorate Materials Requirements

Certain types of automotive applications, such as airbag initiators, seat belt pretensioners, and lithium batteries contained in electronic keys, may contain perchlorate materials. Perchlorate Material – special handling may apply. See www.dtsc.ca.gov/hazardouswaste/perchlorate.

Accessories and Modifications

Adding non-dealer accessories or making modifications to the vehicle can affect vehicle performance and safety, including such things as airbags, braking, stability, ride and handling, emissions systems, aerodynamics, durability, Driver Assistance Systems, and electronic systems like antilock brakes, traction control, and stability control. These accessories or modifications could even cause malfunction or damage not covered by the vehicle warranty.

Damage to suspension components caused by modifying vehicle height outside of factory settings will not be covered by the vehicle warranty.

Damage to vehicle components resulting from modifications or the installation or use of non-GM certified parts, including control module or software modifications, is not covered under the terms of the vehicle warranty and may affect remaining warranty coverage for affected parts.

GM Accessories are designed to complement and function with other systems on the vehicle. See your dealer to accessorize the vehicle using genuine GM Accessories installed by a dealer technician.

Also, see *Adding Equipment to the Airbag-Equipped Vehicle* ⇨ *43*.

Vehicle Checks

Doing Your Own Service Work

⚠ Warning

It can be dangerous to work on your vehicle if you do not have the proper knowledge, service manual, tools, or parts. Always follow owner's manual procedures and consult the service manual for your vehicle before doing any service work.

Caution

Damage caused by improper maintenance can lead to costly repairs and may not be covered by the vehicle warranty.

(Continued)

Caution (Continued)

Maintenance intervals, checks, inspections, recommended fluids, and lubricants are important to keep the vehicle in good working condition.

Do not have chemical flushes that are not approved by GM performed on the vehicle. The use of flushes, solvents, cleaners, or lubricants that are not approved by GM could damage the vehicle, requiring expensive repairs that are not covered by the vehicle warranty.

Caution

Even small amounts of contamination can cause damage to vehicle systems. Do not allow contaminants to contact the fluids, reservoir caps, or dipsticks.

If doing some of your own service work, use the proper service manual. It tells you much more about how to service the vehicle than this manual can. To order the proper service manual, see *Publication Ordering Information* ⇨ *245*.

This vehicle has an airbag system. Before attempting to do your own service work, see *Servicing the Airbag-Equipped Vehicle* ⇨ *42*.

If equipped with remote start, open the hood before performing any service work to prevent remote starting the vehicle accidentally. See *Remote Start* ⇨ *10*.

Keep a record with all parts receipts and list the mileage and the date of any service work performed. See *Maintenance Records* ⇨ *231*.

Hood

⚠ Warning

Turn the vehicle off before opening the hood. If the engine is running with the hood open, you or others could be injured.

⚠ Warning

Components under the hood can get hot from running the engine. To help avoid the risk of burning unprotected skin, never touch these components until they have cooled, and always use a glove or towel to avoid direct skin contact.

Clear any snow from the hood before opening.

To open the hood:

1. Pull the hood release lever with the symbol. It is on the lower left side of the instrument panel.

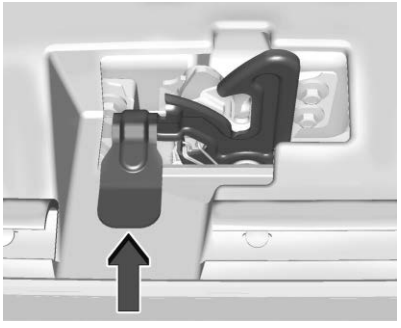

2. Go to the front of the vehicle and locate the secondary release lever under the front center of the hood. Push the secondary hood release lever upward to release.

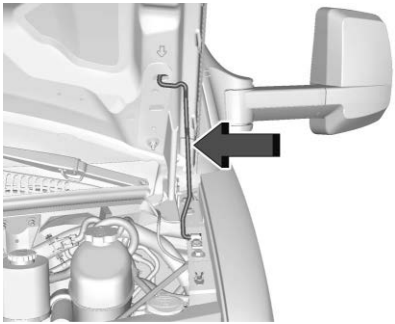

3. Lift the hood and release the hood prop rod from its retainer, in the front of the engine compartment. Securely insert the rod end into the slot marked with an arrow, on the underside of the hood.

To close the hood:

1. Before closing the hood, be sure all filler caps are on properly, and all tools are removed.
2. Lift the hood and remove the hood prop rod from the underside of the hood. Return the prop rod to its retainer. The prop rod must click into place when returning it to the retainer to prevent hood damage.

⚠ Warning

Do not drive the vehicle if the hood is not latched completely. The hood could open fully, block your vision, and cause a crash. You or others could be injured. Always close the hood completely before driving.

3. Lower the hood 20 cm (8 in) above the vehicle and release it. Check to make sure the hood is latched completely. Repeat this process with additional force if necessary.

Engine Compartment Overview

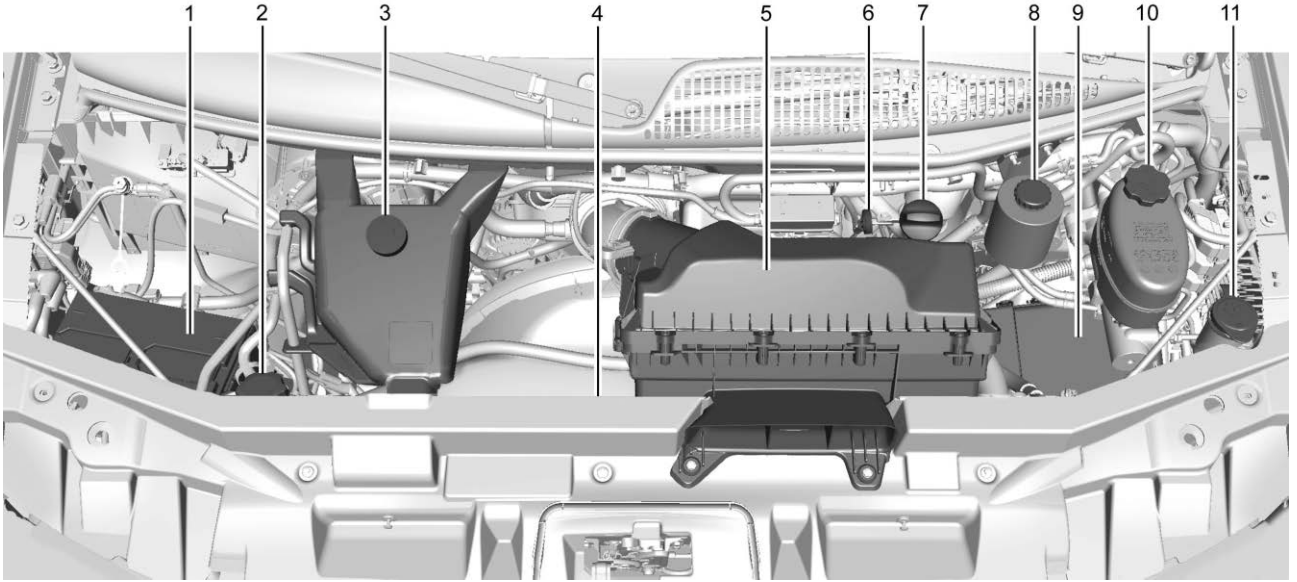

4.3L V6 Engine

1. Battery. See *Battery - North America* ⇨ *173*.
2. Radiator Pressure Cap. See *Cooling System* ⇨ *165*.
3. Coolant Recovery Tank. See *Cooling System* ⇨ *165*.
4. Engine Cooling Fan (Out of View). See *Cooling System* ⇨ *165*.
5. Engine Air Cleaner/Filter. See *Engine Air Cleaner/Filter* ⇨ *164*.
6. Engine Oil Dipstick. See "Checking Engine Oil" under *Engine Oil* ⇨ *161*.
7. Engine Oil Fill Cap. See "When to Add Engine Oil" under *Engine Oil* ⇨ *161*.
8. Power Steering Fluid Reservoir. See *Power Steering Fluid* ⇨ *170*.
9. *Engine Compartment Fuse Block* ⇨ *180*.
10. Brake Master Cylinder Reservoir. See *Brake Fluid* ⇨ *172*.
11. Windshield Washer Fluid Reservoir. See "Adding Washer Fluid" under *Washer Fluid* ⇨ *170*.

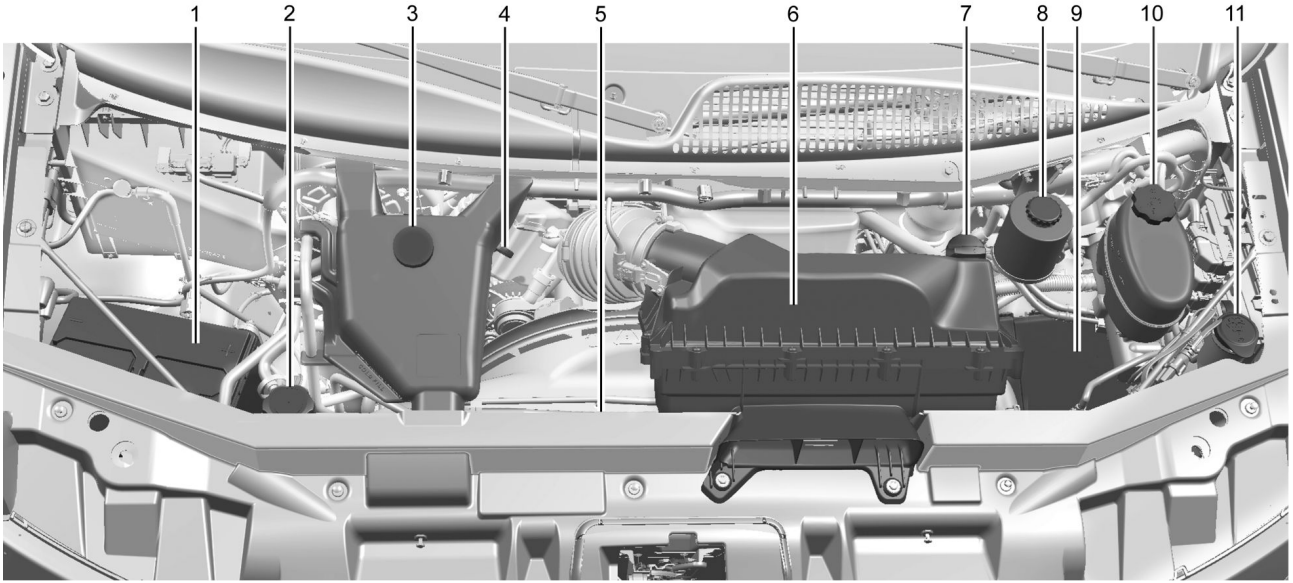

6.6L V8 Engine

1. *Battery - North America* ⇨ *173*.
2. Radiator Pressure Cap. See *Cooling System* ⇨ *165*.
3. Coolant Recovery Tank. See *Cooling System* ⇨ *165*.
4. Engine Oil Dipstick. See "Checking Engine Oil" under *Engine Oil* ⇨ *161*.
5. Engine Cooling Fan (Out of View). See *Cooling System* ⇨ *165*.
6. *Engine Air Cleaner/Filter* ⇨ *164*.
7. Engine Oil Fill Cap. See "When to Add Engine Oil" under *Engine Oil* ⇨ *161*.
8. Power Steering Fluid Reservoir. See *Power Steering Fluid* ⇨ *170*.
9. *Engine Compartment Fuse Block* ⇨ *180*.
10. Brake Master Cylinder Reservoir. See *Brake Fluid* ⇨ *172*.
11. Windshield Washer Fluid Reservoir. See "Adding Washer Fluid" under *Washer Fluid* ⇨ *170*.

Engine Oil

To ensure proper engine performance and long life, careful attention must be paid to engine oil. Following these simple, but important steps will help protect your investment:

- Use engine oil approved to the proper specification and of the proper viscosity grade. See "Selecting the Right Engine Oil" in this section.
- Check the engine oil level regularly and maintain the proper oil level. See "Checking Engine Oil" and "When to Add Engine Oil" in this section.
- Change the engine oil at the appropriate time. See *Engine Oil Life System* ⇨ *163*.
- Always dispose of engine oil properly. See "What to Do with Used Oil" in this section.

Checking Engine Oil

Check the engine oil level regularly, every 650 km (400 mi), especially prior to a long trip. The engine oil dipstick handle is a loop. See *Engine Compartment Overview* ⇨ *158* for the location.

⚠ Warning

The engine oil dipstick handle may be hot; it could burn you. Use a towel or glove to touch the dipstick handle.

If a low oil Driver Information Center (DIC) message displays, check the oil level.

Follow these guidelines:

- To get an accurate reading, park the vehicle on level ground. Check the engine oil level after the engine has been off for at least two hours. Checking the engine oil level on steep grades or too soon after engine shutoff can result in incorrect readings. Accuracy improves when checking a cold engine prior to starting. Remove the dipstick and check the level.
- If unable to wait two hours, the engine must be off for at least 15 minutes if the engine is warm, or at least 30 minutes if the engine is not warm. Pull out the dipstick, wipe it with a clean paper towel or cloth, then push it back in all the way. Remove it again, keeping the tip down, and check the level.

When to Add Engine Oil

4.3L V6 Engine

6.6L V8 Engine

If the oil is below the cross-hatched area at the tip of the dipstick and the engine has been off for at least 15 minutes, add 1 L (1 qt) of the recommended oil and then recheck the level. See "Selecting the Right Engine Oil" later in this section for an explanation of what kind of oil to use. For engine oil crankcase capacity, see *Capacities and Specifications* ⇨ *232*.

Caution

Do not add too much oil. Oil levels above or below the acceptable operating range shown on the dipstick are harmful to the engine. If the oil level is above the operating range (i.e., the engine has so much oil that the oil level gets above the cross-hatched area that shows the proper operating range), the engine could be damaged. Drain the excess oil or limit driving of the vehicle, and seek a service professional to remove the excess oil.

See *Engine Compartment Overview* ⇨ *158* for the location of the engine oil fill cap.

Add enough oil to put the level somewhere in the proper operating range. Push the dipstick all the way back in when through.

Selecting the Right Engine Oil

Selecting the right engine oil depends on both the proper oil specification and viscosity grade. See *Recommended Fluids and Lubricants* ⇨ *229*.

Specification

Use full synthetic engine oils that meet the dexos1 specification. Engine oils that have been approved by GM as meeting the dexos1 specification are marked with the dexos1 approved logo. See www.gmdexos.com.

Caution

Failure to use the recommended engine oil or equivalent can result in engine damage not covered by the vehicle warranty.

Viscosity Grade

Use SAE 5W-30 viscosity grade engine oil.

Cold Temperature Operation: In an area of extreme cold, where the temperature falls below −29 °C (−20 °F), an SAE 0W-30 oil may be used. An oil of this viscosity grade will provide easier cold starting for the engine at extremely low temperatures. When selecting an oil of the

appropriate viscosity grade, it is recommended to select an oil of the correct specification. See “Specification” earlier in this section.

Engine Oil Additives/Engine Oil Flushes

Do not add anything to the oil. The recommended oils meeting the dexos1 specification are all that is needed for good performance and engine protection.

Engine oil system flushes are not recommended and could cause engine damage not covered by the vehicle warranty.

What to Do with Used Oil

Used engine oil contains certain elements that can be unhealthy for your skin and could even cause cancer. Do not let used oil stay on your skin for very long. Clean your skin and nails with soap and water, or a good hand cleaner. Wash or properly dispose of clothing or rags containing used engine oil. See the manufacturer's warnings about the use and disposal of oil products.

Used oil can be a threat to the environment. If you change your own oil, be sure to drain all the oil from the filter before disposal. Never dispose of oil by putting it in the trash or pouring it on the ground, into sewers, or into streams or bodies of water. Recycle it by taking it to a place that collects used oil.

Engine Oil Life System

When to Change Engine Oil

If equipped, this vehicle may have a computer system that indicates when to change the engine oil and filter. This is based on a combination of factors which include engine revolutions, engine temperature, and miles driven. Based on driving conditions, the mileage at which an engine oil change is indicated can vary considerably. For the oil life system to work properly, the system must be reset every time the oil is changed.

When the system has calculated that oil life has been diminished, it indicates that an oil change is necessary. A CHANGE ENGINE OIL SOON message comes on. Change the oil as soon as possible within the next 1 000 km (600 mi). It is possible that, if driving under the best conditions, the oil life system might indicate that an oil change is not necessary for up to a year. The engine oil and filter must be changed at least once a year and, at this time, the system must be reset. Your dealer has trained service people who will perform this work and reset the system. It is also important to check the oil regularly over the course of an oil drain interval and keep it at the proper level.

If the system is ever reset accidentally, the oil must be changed at 5 000 km (3,000 mi) since the last oil change. Remember to reset the oil life system whenever the oil is changed.

How to Reset the Engine Oil Life System

Reset the system whenever the engine oil is changed so that the system can calculate the next engine oil change.

To reset the Engine Oil Life System on most models:

1. Display the OIL LIFE REMAINING on the DIC. See *Driver Information Center (DIC)* ⇨ *82*.
2. Press and hold ✓ on the DIC while the Oil Life display is active. The oil life will change to 100%.

The oil life system can also be reset as follows:

1. Display the OIL LIFE REMAINING on the DIC. See *Driver Information Center (DIC)* ⇨ *82*.
2. Fully press and release the accelerator pedal three times within five seconds. If the display shows 100%, the system is reset.

If the CHANGE ENGINE OIL SOON message comes back on when the vehicle is started, the engine oil life system has not reset. Repeat the procedure.

Automatic Transmission Fluid

How to Check Automatic Transmission Fluid

It is not necessary to check the transmission fluid level. A transmission fluid leak is the only reason for fluid loss. If a leak occurs, take the vehicle to your dealer and have it repaired as soon as possible.

There is a special procedure for checking and changing the transmission fluid. Because this procedure is difficult, this should be done at your dealer. Contact your dealer for additional information.

Caution

Use of the incorrect automatic transmission fluid may damage the vehicle, and the damage may not be covered by the vehicle warranty. Always use the correct automatic transmission fluid. See *Recommended Fluids and Lubricants* ⇨ *229*.

Change the fluid and filter at the intervals listed in the *Maintenance Schedule* ⇨ *226*, and be sure to use the fluid listed in *Recommended Fluids and Lubricants* ⇨ *229*.

Engine Air Cleaner/Filter

The air cleaner/filter assembly is on the front of the engine compartment on the driver side of the vehicle. See *Engine Compartment Overview* ⇨ *158*.

When to Inspect the Engine Air Cleaner/Filter

For intervals on changing and inspecting the engine air filter, see *Maintenance Schedule* ⇨ *226*.

How to Inspect/Replace the Engine Air Cleaner/Filter

⚠ Warning

Operating the engine with the air cleaner/filter off can cause you or others to be burned. Use caution when working on the engine. Do not start the engine or drive the vehicle with the air cleaner/filter off, as flames may be present if the engine backfires.

Caution

If the air cleaner/filter is off, dirt can easily get into the engine, which could damage it. Always have the air cleaner/filter in place when driving.

Do not start the engine or have the engine running with the engine air filter housing open. Before removing the engine air filter, make sure that the engine air filter housing and nearby components are free of dirt and debris. Do not clean the engine air filter or components with water or compressed air.

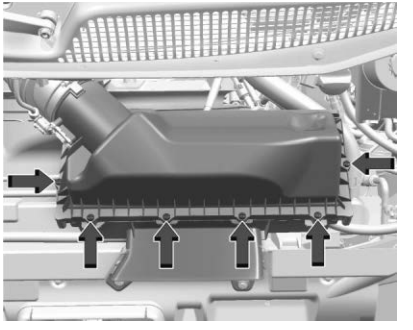

4.3L V6 and 6.6L V8 Engine

To inspect and replace the filter:

1. Remove the six screws, slide the top cover forward and lift, to gain access to the air cleaner/filter.
2. Remove the air cleaner/filter from the housing base. Take care to dislodge as little dirt as possible.

⚠ Warning

If part replacement is necessary, the part must be replaced with one of the same part number or with an equivalent part. Use of a replacement part without the same fit, form, and function may result in personal injury or damage to the vehicle.

3. Clean the air cleaner/filter sealing surface and housing base.
4. Inspect or replace the engine air cleaner/filter.
5. Install the top cover by sliding it into position on the housing base, and secure using six screws.

See *Maintenance Schedule* ⇨ *226* to determine when to replace the engine air cleaner/filter.

Cooling System

⚠ Warning

Do not touch heater or radiator hoses, or other engine parts. They can be very hot and can burn you. Do not run the engine if there is a leak; all coolant could leak out. That could cause an engine fire and can burn you. Fix any leak before driving the vehicle.

The cooling system allows the engine to maintain the correct working temperature.

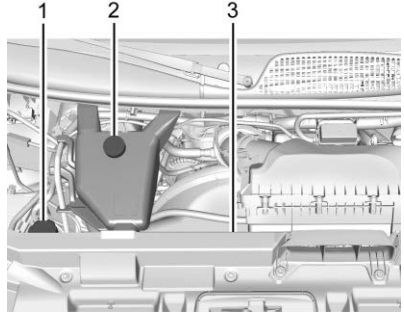

4.3L V6 Engine

1. Radiator Pressure Cap
2. Coolant Recovery Tank
3. Engine Cooling Fan (Out of View)

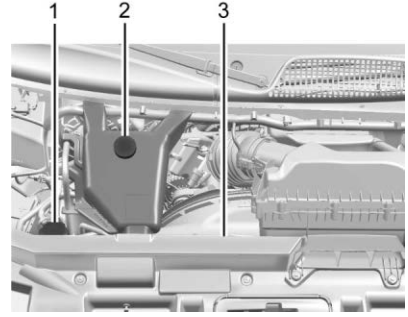

6.6L V8 Engine

1. Radiator Pressure Cap
2. Coolant Recovery Tank
3. Engine Cooling Fan (Out of View)

Engine Coolant

The cooling system in the vehicle is filled with DEX-COOL engine coolant. This coolant is designed to remain in the vehicle for 6 years or 240 000 km (150,000 mi), whichever occurs first.

The following explains the cooling system and how to check and add coolant when it is low. If there is a problem with engine overheating, see *Engine Overheating* ⇨ *168*.

What to Use

⚠ Warning

Plain water, or other liquids such as alcohol, can boil before the proper coolant mixture will. With plain water or the wrong mixture, the engine could get too hot but there would not be an overheat warning. The engine could catch fire and you or others could be burned.

Caution

Do not use anything other than a mix of DEX-COOL coolant that meets GM Standard GMW3420 and clean, drinkable water. Anything else can cause damage to the engine cooling system and the vehicle, which would not be covered by the vehicle warranty.

Use a 50/50 mixture of clean, drinkable water and DEX-COOL coolant. If using this mixture, nothing else needs to be added. This mixture:

- Gives freezing protection down to −37 °C (−34 °F), outside temperature.
- Gives boiling protection up to 129 °C (265 °F), engine temperature.
- Protects against rust and corrosion.
- Will not damage aluminum parts.
- Helps keep the proper engine temperature.

Never dispose of engine coolant by putting it in the trash, pouring it on the ground, or into sewers, streams, or bodies of water. Have the coolant changed by an authorized service center, familiar with legal requirements regarding used coolant disposal. This will help protect the environment and your health.

Checking Coolant

The vehicle must be on a level surface when checking the coolant level.

Check to see if coolant is visible in the coolant recovery tank. If the coolant inside the coolant recovery tank is boiling, do not do anything else until it cools down. If coolant is visible but the coolant level is not at or above the indicated mark, add a 50/50 mixture of clean, drinkable water and DEX-COOL coolant at the coolant recovery tank, but be sure the cooling system is cool before this is done.

The coolant recovery tank cap has this symbol on it.

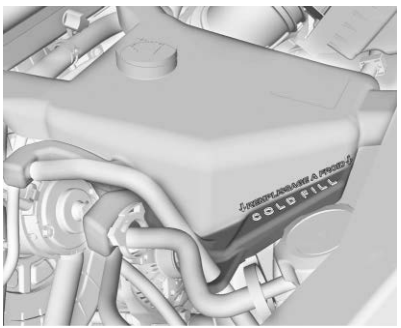

When the engine is cold, the coolant level should be at or above the COLD FILL mark. If it is not, there could be a leak in the cooling system.

If the coolant is low, add the coolant or take the vehicle to a dealer for service.

How to Add Coolant to the Recovery Tank for Gasoline Engines

⚠ Warning

Spilling coolant on hot engine parts can burn you. Coolant contains ethylene glycol and it will burn if the engine parts are hot enough.

⚠ Warning

Plain water, or other liquids such as alcohol, can boil before the proper coolant mixture will. With plain water or the wrong mixture, the engine could get too hot but there would not be an overheat warning. The engine could catch fire and you or others could be burned.

⚠ Warning

Steam and scalding liquids from a hot cooling system are under pressure. Turning the pressure cap, even a little, can cause them to come out at high speed and you could be burned. Never turn the cap when the cooling system, including the pressure cap, is hot. Wait for the cooling system and pressure cap to cool.

Caution

Failure to follow the specific coolant fill procedure could cause the engine to overheat and could cause system damage. If coolant is not visible in the surge tank, contact your dealer.

If coolant is needed, add the proper DEX-COOL coolant mixture at the coolant recovery tank.

How to Add Coolant to the Radiator

⚠ Warning

Steam and scalding liquids from a hot cooling system are under pressure. Turning the pressure cap, even a little, can cause them to come out at high speed and you could be burned. Never turn the cap when the cooling system, including the pressure cap, is hot. Wait for the cooling system and pressure cap to cool.

If coolant is needed, add the proper mixture directly to the radiator, but be sure the cooling system is cool before this is done.

1. Remove the radiator pressure cap when the cooling system, including the radiator pressure cap and upper radiator hose, is no longer hot. Turn the pressure cap slowly counterclockwise until it first stops. Do not press down while turning the pressure cap.

If a hiss is heard, wait for that to stop. A hiss means there is still some pressure left.

2. Keep turning the pressure cap, but now push down as you turn it. Remove the pressure cap.
3. Fill the radiator with the proper mixture, up to the base of the filler neck. See *Recommended Fluids and Lubricants* ⇨ *229* for more information about the proper coolant mixture.

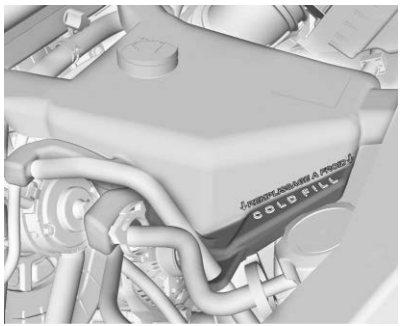

4. Remove the coolant recovery tank cap and fill to the COLD FILL mark.
5. Reinstall the cap back on the coolant recovery tank, but leave the radiator pressure cap off.
6. Start the engine and let it run until the upper radiator hose can be felt getting hot. Watch out for the engine cooling fan.
7. By this time, the coolant level inside the radiator filler neck may be lower. If the level is lower, add more of the proper mixture through the filler neck until the level reaches the base of the filler neck.

Caution

If the pressure cap is not tightly installed, coolant loss and engine damage may occur. Be sure the cap is properly and tightly secured.

8. Replace the pressure cap. At any time during this procedure if coolant begins to flow out of the filler neck, reinstall the pressure cap.

Engine Overheating

Caution

Do not run the engine if there is a leak in the engine cooling system. This can cause a loss of all coolant and can damage the system and vehicle. Have any leaks fixed right away.

The vehicle has an indicator to warn of engine overheating.

There is an engine coolant temperature gauge on the vehicle's instrument cluster. See *Engine Coolant Temperature Gauge* ⇨ *74*.

If the decision is made not to lift the hood when this warning appears, but instead get service help right away, see *Roadside Assistance Program* ⇨ *241*.

If the decision is made to lift the hood, make sure the vehicle is parked on a level surface.

Then check to see if the engine cooling fans are running. If the engine is overheating, the fan should be running. If it is not, do not continue to run the engine and have the vehicle serviced.

See if the engine cooling fan speed increases when idle speed is doubled by pushing the accelerator pedal down. If it does not, the vehicle needs service. Turn off the engine.

If Steam is Coming from the Engine Compartment

⚠ Warning

Steam and scalding liquids from a hot cooling system are under pressure. Turning the pressure cap, even a little, can cause them to come out at high speed and you could be burned. Never turn the cap when the cooling system, including the pressure cap, is hot. Wait for the cooling system and pressure cap to cool.

If No Steam is Coming from the Engine Compartment

If an engine overheat warning is displayed but no steam can be seen or heard, the problem may not be too serious. Sometimes the engine can get a little too hot when the vehicle:

- Climbs a long hill on a hot day.
- Stops after high-speed driving.
- Idles for long periods in traffic.
- Tows a trailer. See *General Towing Information* ⇨ *152*.

If the overheat warning is displayed with no sign of steam:

1. Turn the air conditioning off.
2. Turn the heater on to the highest temperature and to the highest fan speed. Open the windows as necessary.
3. When it is safe to do so, pull off the road, shift to P (Park) or N (Neutral) and let the engine idle.

If the engine coolant temperature gauge is no longer in the overheat zone or an overheat warning no longer displays, the vehicle can be driven. Continue to drive the vehicle slowly for about 10 minutes. Keep a safe vehicle distance from the vehicle in front. If the warning does not come back on, continue to drive normally and have the cooling system checked for proper fill and function.

If the warning continues, pull over, stop, and park the vehicle right away.

If there is still no sign of steam, push down the accelerator until the engine speed is about twice as fast as normal idle speed for at least three minutes while parked. If the warning is still on, turn off the engine until it cools down.

If the decision is made not to lift the hood, get service help right away.

Engine Fan

The vehicle has a clutched engine cooling fan. When the clutch is engaged, the fan spins faster to provide more air to cool the engine. In most everyday driving conditions, the fan is spinning slower and the clutch is not fully engaged. This improves fuel economy and reduces fan noise. Under heavy vehicle loading, trailer towing, and/or high outside temperatures, the fan speed increases as the clutch more fully engages, so an increase in fan noise may be heard. This is normal and should not be mistaken as the transmission slipping or making extra shifts. It is merely the cooling system functioning properly. The fan will slow down when additional cooling is not required and the clutch partially disengages.

This fan noise may be heard when starting the engine. It will go away as the fan clutch partially disengages.

Power Steering Fluid

The power steering fluid reservoir is in the engine compartment on the driver side of the vehicle. See *Engine Compartment Overview* ⇨ *158* for reservoir location.

When to Check Power Steering Fluid

It is not necessary to regularly check power steering fluid unless there is a leak suspected in the system or an unusual noise is heard. A fluid loss in this system could indicate a problem. Have the system inspected and repaired.

Wait for the power steering system to cool, with the engine off, before checking the fluid.

How to Check Power Steering Fluid

To check the power steering fluid:

1. Set the ignition off and let the engine compartment cool down.
2. Wipe the cap and the top of the reservoir clean.
3. Unscrew the cap and wipe the dipstick with a clean rag.
4. Replace the cap and completely tighten it.
5. Remove the cap again and look at the fluid level on the dipstick.

The level should be between the ADD and FULL marks. If necessary, add only enough fluid to bring the level up to the hashed area between the ADD and FULL marks, do not overfill.

To prevent contamination of brake fluid, never check or fill the power steering reservoir with the brake master cylinder cover off.

What to Use

Caution
Use of the incorrect fluid may damage the vehicle and the damages may not be covered by the vehicle warranty. Always use the correct fluid listed in *Recommended Fluids and Lubricants* ⇨ *229*.

To determine what kind of fluid to use, see *Recommended Fluids and Lubricants* ⇨ *229*. Always use the proper fluid. Failure to use the proper fluid can cause leaks and damage hoses and seals.

Washer Fluid

What to Use

When the vehicle needs windshield washer fluid, be sure to read the manufacturer's instructions before use. If operating the vehicle in an area where the temperature may fall below freezing, use a fluid that has sufficient protection against freezing.

Adding Washer Fluid

Open the cap with the washer symbol on it. Add washer fluid until the tank is full.

See *Engine Compartment Overview* ⇨ *158* for reservoir location.

Caution

- Do not use washer fluid that contains any type of water repellent coating. This can cause the wiper blades to chatter or skip.
- Do not use engine coolant (antifreeze) in the windshield washer. It can damage the windshield washer system and paint.
- Do not mix water with ready-to-use washer fluid. Water can cause the solution to freeze and damage the washer fluid tank and other parts of the washer system.
- When using concentrated washer fluid, follow the manufacturer instructions for adding water.
- Fill the washer fluid tank only three-quarters full when it is very cold. This allows for fluid expansion if freezing occurs, which could damage the tank if it is completely full.

Brakes

Inspections

Visually inspect brake system components as follows:

- Brake lines and hoses for proper attachment, connections, binding, leaks, cracks, and chafing.
- Disc brake pads for wear and rotors for surface condition.
- Drum brake linings/shoes for wear or cracks.
- All other brake parts for cracks and leaks.

When tires are rotated, inspect drum brake linings or disc brake pads for wear.

Troubleshooting

Brake Pedal Travel

See your dealer if the brake pedal does not return to normal height, or if there is a rapid increase in pedal travel. This could be a sign that brake service may be required.

Brake Pulsation

If brakes are pulsating:

- Inspect rotors, pads, linings for uneven wear. Resurface or replace as needed.
- Check torque on all wheel nuts. Properly torqued wheel nuts are necessary to help prevent brake pulsation. Evenly tighten wheel nuts in the proper sequence to torque specifications. See *Capacities and Specifications* ⇨ *232*.

Brake Squeal and Brake Wear Indicators

⚠ Warning

The brake wear warning sound means that soon the brakes will not work well. That could lead to a crash. When the brake wear warning sound is heard, have the vehicle serviced.

Disc brake linings have built-in wear indicators that make a high-pitched warning sound when the brake linings are worn, and new linings are needed. The sound can come and go or can be heard all the time when the vehicle is moving, except when applying the brake pedal firmly.

Some driving conditions or climates can cause a brake squeal when the brakes are first applied, clearing up following several applications. This does not mean something is wrong with the brakes.

Replacing Brake System Parts

Caution
Continuing to drive with worn-out brake linings could result in costly brake repairs.

Brake pads should be replaced as complete axle sets.

Always replace brake system parts with new, approved replacement parts. If this is not done, the brakes may not work properly. The braking performance can change in many ways if the wrong brake parts are installed or if parts are improperly installed.

Brake Fluid

The brake master cylinder reservoir is filled with GM approved DOT 4 brake fluid as indicated on the reservoir cap. See *Engine Compartment Overview* ⇨ *158* for the location of the reservoir.

When the brake fluid falls to a low level, the brake warning light comes on. See *Brake System Warning Light* ⇨ *78*.

Checking Brake Fluid

⚠ Warning
If too much brake fluid is added, it can spill on the engine and burn, if the engine is hot enough. You or others could be burned, and the vehicle could be damaged. Add brake fluid only when work is done on the brake hydraulic system.

Always clean the brake fluid reservoir cap and the area around the cap before removing it.

To check the brake fluid, place the vehicle in P (Park) on a level surface. The brake fluid level should be between the Min and Max marks on the brake fluid reservoir.

There are only two reasons why brake fluid may be low:

- Normal brake lining wear. When new linings are installed, the fluid level will return to normal.
- Brake system fluid leak. With a leak, the brakes will not work well. To have the brake hydraulic system fixed, see your dealer.

Do not top off the brake fluid. Adding fluid does not correct a leak. If fluid is added when the linings are worn, there will be too much fluid when new brake linings are installed. Add or remove fluid, as necessary, only when work is done on the brake hydraulic system.

Brake fluid absorbs water over time which degrades the effectiveness of the brake fluid. Replace brake fluid at the specified intervals to prevent increased stopping distance. See *Maintenance Schedule* ⇨ *226*.

What to Add

Warning

The wrong or contaminated brake fluid could result in damage to the brake system. This could result in the loss of braking leading to a possible injury. Always use the proper GM approved brake fluid.

Caution

If brake fluid is spilled on the vehicle's painted surfaces, the paint finish can be damaged. Immediately wash off any painted surface.

Use only GM approved DOT 4 brake fluid from a clean, sealed container. See *Recommended Fluids and Lubricants* ➪ *229*.

Battery - North America

The original equipment battery is maintenance free. Do not remove the cap and do not add fluid.

Refer to the replacement number shown on the original battery label when a new battery is needed. See *Engine Compartment Overview* ➪ *158* for battery location.

Warning

WARNING: Battery posts, terminals and related accessories can expose you to chemicals including lead and lead compounds, which are known to the State of California to cause cancer and birth defects or other reproductive harm. Wash hands after handling. For more information go to www.P65Warnings.ca.gov.

See *California Proposition 65 Warning* ➪ *1*.

Vehicle Storage

Warning

Batteries have acid that can burn you and gas that can explode. You can be badly hurt if you are not careful. Always wear eye protection. See *Jump Starting - North America* ➪ *212* for tips on working around a battery without getting hurt.

Infrequent Usage: Remove the black, negative (–) cable from the battery to keep the battery from running down.

Extended Storage: Remove the black, negative (–) cable from the battery or use a battery trickle charger.

Rear Axle

When to Check Lubricant

It is not necessary to regularly check the rear axle fluid unless a leak is suspected or an unusual noise is heard. A fluid loss could indicate a problem. Have it inspected and repaired. This service can be complex. See your dealer.

Do not directly power wash the transfer case and/or front/rear axle output seals. High pressure water can overcome the seals and contaminate the fluid. Contaminated fluid will decrease the life of the transfer case and/or drive axles and should be replaced.

Noise Control System

NOISE EMISSIONS WARRANTY

General Motors LLC, warrants to the first person who purchases this vehicle for purposes other than resale and to each subsequent purchaser that this vehicle as manufactured by General Motors LLC, was designed, built and equipped to conform at the time it left General Motors LLC's control with all applicable U.S. EPA Noise Control Regulations. This warranty covers this vehicle as designed, built and equipped by General Motors LLC, and is not limited to any particular part, component or system of the vehicle manufactured by General Motors LLC. Defects in design, assembly or in any part, component or system of the vehicle as manufactured by General Motors LLC, which, at the time it left General Motors LLC's control, caused noise emissions to exceed Federal standards, are covered by this warranty for the life of the vehicle.

TAMPERING WITH NOISE CONTROL SYSTEM PROHIBITED

Federal law prohibits the following acts or the causing thereof:

1. The removal or rendering inoperative by any person, other than for purposes of maintenance, repair, or replacement, of any device or element of design incorporated into any new vehicle for the purpose of noise control prior to its sale or delivery to the ultimate purchaser or while it is in use; or
2. the use of the vehicle after such device or element of design has been removed or rendered inoperative by any person.

Among those acts presumed to constitute tampering are the acts listed below.

Insulation:

Removal of the noise shields or any undercab insulation.

Engine:

Removal or rendering engine speed governor, if so equipped, inoperative so as to allow engine speed to exceed manufacturer specifications.

Modification of the engine control system or calibration.

Fan and Drive:

- Removal of fan clutch or rendering clutch inoperative.
- Removal of the fan shroud.

Air Intake:

- Removal of air cleaner silencer.
- Reversing air cleaner cover.

Exhaust:

- Removal of muffler, catalytic converter, and/or resonator.
- Removal of exhaust pipes and exhaust pipe clamps.

Starter Switch Check

⚠ Warning

When you are doing this inspection, the vehicle could move suddenly. If the vehicle moves, you or others could be injured.

1. Before starting this check, be sure there is enough room around the vehicle.
2. Apply both the parking brake and the regular brake.

   Do not use the accelerator pedal, and be ready to turn off the engine immediately if it starts.
3. Try to start the engine in each gear. The vehicle should start only in P (Park) or N (Neutral). If the vehicle starts in any other position, contact your dealer for service.

Automatic Transmission Shift Lock Control Function Check

⚠ Warning

When you are doing this inspection, the vehicle could move suddenly. If the vehicle moves, you or others could be injured.

1. Before starting this check, be sure there is enough room around the vehicle. It should be parked on a level surface.
2. Apply the parking brake. Be ready to apply the regular brake immediately if the vehicle begins to move.
3. With the engine off, turn the ignition on, but do not start the engine. Without applying the regular brake, try to move the shift lever out of P (Park) with normal effort. If the shift lever moves out of P (Park), contact your dealer for service.

Ignition Transmission Lock Check

While parked, and with the parking brake set, try to turn the ignition off in each shift lever position.

- The ignition should turn to off only when the shift lever is in P (Park).
- The ignition key should come out only when the ignition is off.

Contact your dealer if service is required.

Park Brake and P (Park) Mechanism Check

⚠ Warning

When you are doing this check, the vehicle could begin to move. You or others could be injured and property could be damaged.

(Continued)

Warning (Continued)

Make sure there is room in front of the vehicle in case it begins to roll. Be ready to apply the regular brake at once should the vehicle begin to move.

Park on a steep hill, with the vehicle facing downhill. Keeping your foot on the regular brake, set the parking brake.

- To check the parking brake's holding ability: With the vehicle on and the transmission in N (Neutral), slowly remove foot pressure from the regular brake pedal. Do this until the vehicle is held by the parking brake only.
- To check the P (Park) mechanism's holding ability: With the vehicle on, shift to P (Park). Then release the parking brake and slowly remove pressure from the regular brake pedal.

Contact your dealer if service is required.

Wiper Blade Replacement

Caution
Allowing the wiper arm to touch the windshield when no wiper blade is installed could damage the windshield. Any damage that occurs would not be covered by the vehicle warranty. Do not allow the wiper arm to touch the windshield.

Windshield wiper blades should be inspected for wear and cracking.

Windshield wiper blades should be replaced periodically. See *Multi-Point Vehicle Inspection (MPVI)* ⇨ *228*.

Replacement blades come in different types and are removed in different ways. For proper type and length, see your dealer.

1. Lift the wiper arm away from the windshield.

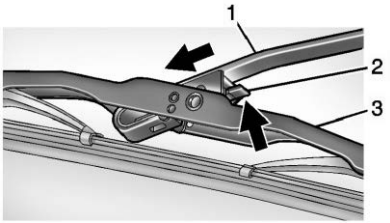

2. Push the release lever (2) to disengage the hook and push the wiper arm (1) out of the blade assembly (3).
3. Push the new blade assembly securely on the wiper arm until the release lever clicks into place.

Windshield Replacement

Driver Assistance Systems

If the windshield needs to be replaced and the vehicle is equipped with a front camera sensor for the Driver Assistance Systems, a GM replacement windshield is recommended. The replacement windshield must be installed according to GM specifications for proper alignment. If it is not, these systems may not work properly, they may display messages, or they may not work at all. See your dealer for proper windshield replacement.

Headlight Aiming

Front Headlight Aiming

Headlight aim has been preset and should need no further adjustment.

If the vehicle is damaged in a crash, the headlight aim may be affected. If adjustment to the headlights is necessary, see your dealer.

Bulb Replacement

Caution
Do not replace incandescent bulbs with aftermarket LED replacement bulbs. This can cause damage to the vehicle electrical system.

For the proper type of replacement bulbs, or any bulb changing procedure not listed in this section, contact your dealer.

Halogen Bulbs

Warning

Halogen bulbs have pressurized gas inside and can burst if you drop or scratch the bulb. You or others could be injured. Be sure to read and follow the instructions on the bulb package.

Front Turn Signal, Sidemarker, and Parking Lights

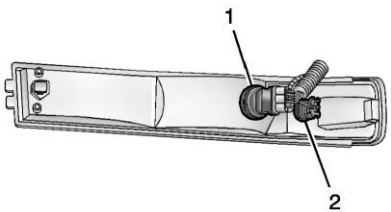

1. Front Parking and Turn Signal Light
2. Front Sidemarker Light

To replace the front turn signal, sidemarker, and/or parking light bulb(s):

1. Use a small tool to unlatch the outboard clip on the light by pushing inboard and prying the light assembly forward.
2. Remove the light from the grille.
3. Turn the bulb socket counterclockwise one-quarter turn and remove it from the light assembly.
4. Remove the bulb from the socket by pulling it straight out.
5. Replace the bulb.
6. Turn the bulb socket clockwise to reinstall it in the light assembly.
7. Reinstall the light assembly into the grille until the outboard clip snaps into place.

Taillights

To replace a taillight/turn signal light or back-up light bulb:

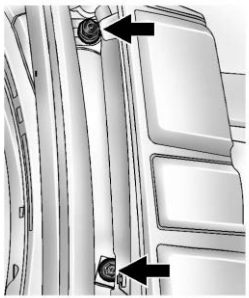

1. Remove the two inboard nuts from the inside of the taillight assembly.

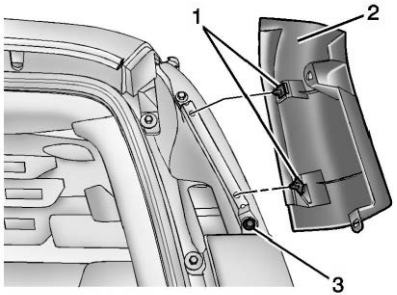

2. The third nut (3) is under the applique piece (2) above the light. Remove the two inboard applique nuts. Pull the applique (2) straight rearward slightly to clear the studs. Then rotate the applique (2) just far enough to gain access to the outer push pins (1).
3. Carefully disconnect the push pins (1) from the applique bracket.
4. Remove the third nut (3) from the upper outboard side of the light.
5. Remove the taillight assembly from the vehicle.

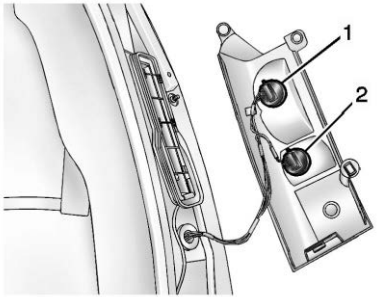

6. Remove the taillight/turn signal light (1) or back-up light (2) bulb socket by turning it counterclockwise one-quarter turn and pulling it out of the light assembly.
7. Remove the bulb by pulling it straight out.
8. Push the new bulb into the socket.
9. Reinstall the bulb socket by turning it clockwise into the light assembly.
10. Reverse Steps 1–5 to reinstall the taillight assembly and applique.

Center High-Mounted Stoplight

The Center High-Mounted Stoplight is above the rear doors at the center of the vehicle.

To replace a bulb:

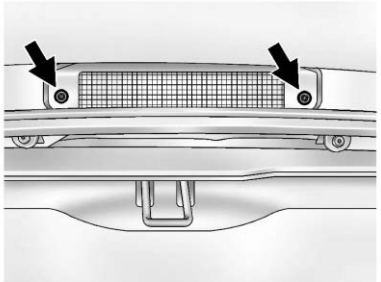

1. Remove the two screws from the Center High-Mounted Stoplight assembly.
2. Remove the stoplight assembly.
3. Turn the bulb socket counterclockwise one-quarter turn to remove it from the light assembly.
4. Pull the old bulb straight out of the socket and push the new bulb into the socket.
5. Turn the bulb socket clockwise one-quarter turn to install it in the light assembly.
6. Reinstall the stoplight assembly and two screws.

Do not block or damage the Center High-Mounted Stoplight when items are loaded on the roof of the vehicle.

License Plate Lights

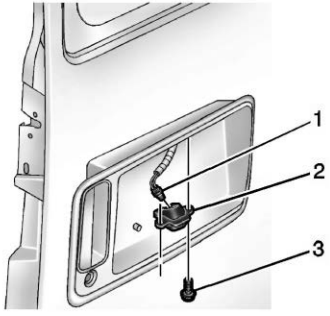

1. Bulb Socket
2. License Plate Bulb Assembly
3. Screws

To replace one of these bulbs:

1. Remove the screws (3) that secure the license plate bulb assembly (2).
2. Turn the bulb socket (1) counterclockwise and pull the bulb straight out of the socket.
3. Install the new bulb.
4. Reverse Steps 1 and 2 to reinstall the license plate bulb assembly.

Electrical System

Electrical System Overload

The vehicle has fuses to protect against an electrical system overload.

When the current electrical load is too heavy, the circuit breaker opens and closes, protecting the circuit until the current load returns to normal or the problem is fixed. This greatly reduces the chance of circuit overload and fire caused by electrical problems.

Fuses protect the wires that provide the power to the devices in your vehicle.

If there is a problem on the road and a fuse needs to be replaced, the same amperage fuse can be borrowed. Choose some feature of the vehicle that is not needed to use and replace it as soon as possible.

To check a fuse, look at the band inside the fuse. If the band is broken or melted, replace the fuse. Be sure to replace a bad fuse with a fuse of the identical size and rating.

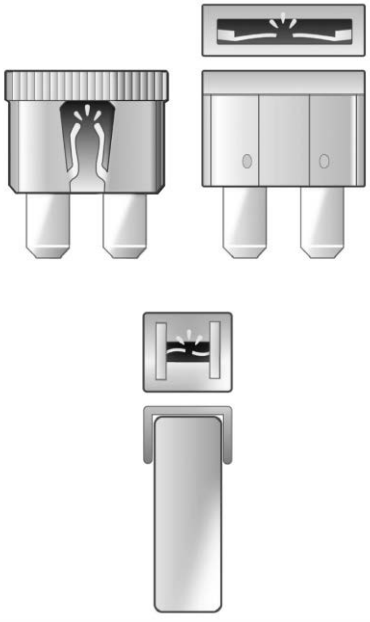

Replacing a Blown Fuse

At the next opportunity, see your dealer to replace the blown fuse.

Headlight Wiring

An electrical overload may cause the lights to go on and off, or in some cases to remain off. Have the headlight wiring checked right away if the lights go on and off or remain off.

Windshield Wipers

If the wiper motor overheats due to heavy snow or ice, the windshield wipers will stop until the motor cools and will then restart.

Although the circuit is protected from electrical overload, overload due to heavy snow or ice may cause wiper linkage damage. Always clear ice and heavy snow from the windshield before using the windshield wipers.

If the overload is caused by an electrical problem and not snow or ice, be sure to get it fixed.

Fuses and Circuit Breakers

⚠ Danger

Fuses and circuit breakers are marked with their ampere rating. Do not exceed the specified amperage rating when replacing

(Continued)

Danger (Continued)

fuses and circuit breakers. Use of an oversized fuse or circuit breaker can result in a vehicle fire. You and others could be seriously injured or killed.

⚠ Warning

Installation or use of fuses that do not meet GM's original fuse specifications is dangerous. The fuses could fail, and result in a fire. You or others could be injured or killed, and the vehicle could be damaged.

The fuses and circuit breakers protect the electrical system from short circuits, greatly reducing the chance of electrical damage or fire.

See *Accessories and Modifications* ➪ *155* and *General Information* ➪ *155*.

To check or replace a blown fuse, see *Electrical System Overload* ➪ *179*.

Engine Compartment Fuse Block

The fuse block is in the engine compartment on the driver side of the vehicle.

Vehicles with Upfitter Content

See www.gmupfitter.com for upfitter provisions and best practices.

Caution

Spilling liquid on any electrical component on the vehicle may damage it. Always keep the covers on any electrical component.

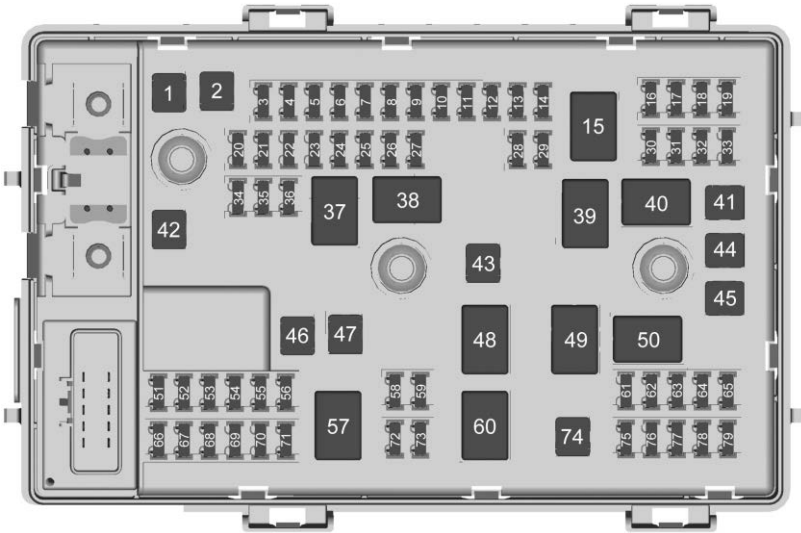

The vehicle may not be equipped with all of the fuses, relays, and features shown.

Fuses	Usage
F01	ABS MTR – Antilock Brake System Motor
F02	ABS MDL – Antilock Brake System Module
F03	RT STOP/TURN TRLR – Right Trailer Stop/Turn Signal Light
F04	–
F05	–
F06	FSCM IGN – Fuel System Control Module Run/Crank
F07	BCM 5 – Body Control Module 5
F08	BCM 7 – Body Control Module 7
F09	BCM 4 – Body Control Module 4
F10	IPC – Instrument Panel Cluster

Fuses	Usage
F11	TRLR WRG – Trailer Wiring
F12	–
F13	DISPLY MIR – Display Mirror REAR B/U CAMERA – Rear Reverse Camera
F14	WASH – Windshield Washer
F16	HORN
F17	TRANS – Transmission
F18	A/C CMPRSR – Air Conditioning Compressor
F19	ECM BATT – Engine Control Module Battery
F20	CUTAWAY LH STP/TRN LAMP – Left Stop/Turn Light Cutaway

Fuses	Usage
F21	LT STOP/TRN TRLR – Left Stop/Turn Light Trailer
F22	CUTAWAY RH STP/TRN LAMP – Right Stop/Turn Light Cutaway
F23	–
F24	FUEL PUMP
F25	AUX PWR OUTLET – Auxiliary Power Outlet
F26	BCM 3 – Body Control Module 3
F27	SEO – Special Equipment Option
F28	AIRBAG
F29	STR/WHL/SNSR – Steering Wheel Sensor
F30	ENGINE CONTROL MODULE – Engine Control Module Run/Crank

Fuses	Usage
F31	TCM IGN – Transmission Control Module Run/Crank
F32	TCM BATTERY – Transmission Control Module 1 Battery (Auto 6 Speed)
F33	OBSDET – Obstacle Detection/Rear Park Assist Module
F34	–
F35	–
F36	FSCM BATT – Fuel System Control Module Battery
F41	T87A TCM BATT – Transmission Control Module 2 Battery (Auto 8 Speed)
F42	TRLR WRG – Trailer Wiring

Fuses	Usage
F43	–
F44	STRTR SOL – Starter Solenoid
F45	ECM – Engine Control Module PWR/TRN – Powertrain Signal 2
F46	AC/DC INV – Direct Current/Alternating Current Inverter
F47	–
F51	LT HI BEAM – Left High-Beam Headlight
F52	RT HI BEAM – Right High-Beam Headlight
F53	LT LO BEAM – Left Low-Beam Headlight
F54	RT LO BEAM – Right Low-Beam Headlight

Fuses	Usage
F55	WPR – Wipers
F56	CNSTR VENT SOL – Canister Vent Solenoid
F58	BCM 2 – Body Control Module 2
F59	BCM 1 – Body Control Module 1
F61	ENG OIL SOLENOID – Engine Oil Control Solenoid
F62	O2 SNSR 2 – O2 Sensor 2
F63	–
F64	MASS AIRFLOW/ CANISTER VENT – Mass Airflow Sensor/Canister Purge Solenoid
F65	ODD IGN/INJ – Ignition Coils/Injectors Odd
F66	DRL 2 (LOLVL) – Daytime Running Lights 2

Fuses	Usage
F67	DRL 1 (UPLVL) – Daytime Running Lights 1
F68	AUX STOP LAMP(S) – Auxiliary Stoplights
F69	PWR EXT TRAILER – External Power Trailer
F70	UPFTR STOP LAMP(S) – Upfitter Stoplights
F71	FUEL HTR/FLEX FUEL SNSR – Fuel Heater/ FlexFuel Sensor
F72	BCM 6 – Body Control Module 6
F73	LTR/DLC – Lighter/Data Link Connector
F74	FRT BLWR – Front Blower
F75	ENGINE CONTROL MODULE
F76	–

Fuses	Usage
F77	O2 SNSR 1 – O2 Sensor 1
F78	ECM – Engine Control Module PWR/TRN – Powertrain Signal 1
F79	EVEN IGN/INJ – Ignition Coils/Injectors Even

Relays	Usage
K15	RUN/CRANK
K37	–
K38	FUEL PUMP
K39	CRNK – Crank
K40	A/C CMPRSR – A/C Compressor
K48	–
K49	PWR/TRN – Powertrain
K50	–

Relays	Usage
K57	–
K60	–

Auxiliary Fuse Block

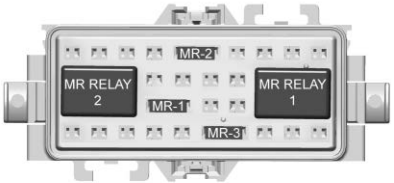

This component is near the fuse block in the engine compartment

Fuses	Usage
MR-1	Upfitter 1
MR-2	Upfitter 2
MR-3	Upfitter Power Control

Relays	Usage
MR Rel 1	Upfitter 1
MR Rel 2	Upfitter 2

Floor Console Fuse Block

The floor console fuse block is under the driver seat.

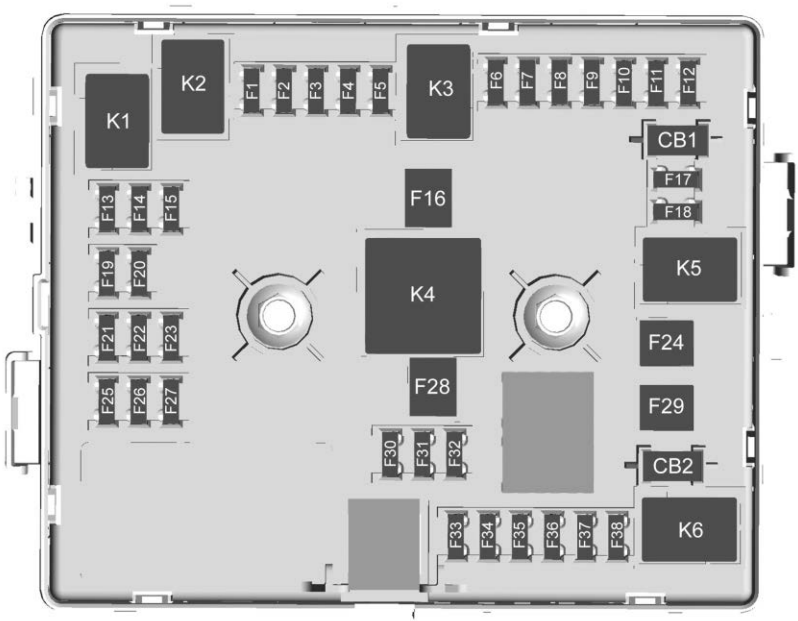

The vehicle may not be equipped with all of the fuses, relays, and features shown.

Mini-Fuses	Usage
F01	–
F02	STR/WHL/SNSR – Steering Wheel Controls
F03	AUX PRK LAMP(S) (CUTAWAY) – Auxiliary Parking Lights
F04	FRT PRK LAMP(S) – Front Parking Lights
F05	TRLR PRK LAMP(S) – Trailer Parking Lights
F06	UPFTR PRK LAMP(S) – Upfitter/Parking Lights
F07	RT REAR PARK LAMP – Right Rear Parking Light
F08	LT REAR PARK LAMP – Left Rear Parking Light

Mini-Fuses	Usage
	OSRVMSW – Outside View Mirror
F09	DK_ULK_UPFTR
	FCM – Front Camera Module
F10	AIRBAG
	AOS – Automatic Occupant Sensing
F11	ONSTAR
F12	–
F13	HVAC 2 – Heating Ventilation Air Conditioning 2
F14	HVAC 1 – Heating Ventilation Air Conditioning 1
F15	REF LED DISPLAY – Reflected Light Auxiliary Display

Mini-Fuses	Usage
F16	UPFTR AUX 1 – Upfitter Auxiliary 1
	GAS AMBULANCE
F17	OSRVM HTR – Outside Rear View Mirrors Defogger
F18	REAR DEFOG – Rear Window Defogger
F19	CMPS – Compass
F20	RDO/CHIME – Radio/Chime/SiriusXM Satellite Radio
F21	RFA – Remoe Function Actuator
	TPM – Tire Pressure Monitor Sensors
F22	IGN SW (DLIS) – Ignition Switch (Discrete Logic Ignition Sensor)
	PK 3 – Pass Key 3

Mini-Fuses	Usage
F23	I/P CLUSTER – Instrument Panel Cluster
F24	–
F25	HVAC CNTRL – Heating Ventilation Air Conditioning Controls
F26	AUX/TRLR BCK/UP – Auxiliary/Trailer Reverse Lights
F27	TAIL LAMP(S) BCK/UP – Reverse Tail Lights
F28	UPFTR AUX 2/READING LAMP(S) – Upfitter Auxiliary 2
	GAS AMBULANCE
F29	REAR BLOWER
F30	UPFTR CTSY LAMP(S) – Upfitter Courtesy Lights
	AMBULANCE UPFITTER

Mini-Fuses	Usage
F31	FRT DR LCK – Front Doors Lock
F32	REAR DR LCK – Rear Doors Lock
F33	CARGO DR UNLCK – Cargo Door Unlock
F34	FRT PASS DR UNLCK – Front Passenger Door Unlock
F35	REAR PASS DR UNLCK – Rear Passenger Door Unlock
F36	DVR DR UNLCK – Driver Door Unlock
F37	–
F38	–

Circuit Breakers	Usage
CB01	PWR SEATS – Power Seats
CB02	PWR WINDOW(S) – Power Windows

Relays	Usage
K01	(HC MICRO) RUN – (High Current Micro) Run/Crank
K02	–
K03	(HC MICRO) PRK LAMPS – (High Current Micro) Parking Lights
K04	(HC MINI) UPFTR AUX 2 – (High Current Mini) Upfitter Auxiliary 2
K05	(HC MICRO) REAR DEFOG – (High Current Micro) Rear Window Defogger
K06	(HC MICRO) RAP – (High Current Micro) Retained Accessory Power

Wheels and Tires

Tires

Every new GM vehicle has high-quality tires made by a leading tire manufacturer. See the warranty manual for information regarding the tire warranty and where to get service. For additional information refer to the tire manufacturer.

⚠ Warning

- Poorly maintained and improperly used tires are dangerous.

(Continued)

Warning (Continued)

- Overloading the tires can cause overheating as a result of too much flexing. There could be a blowout and a serious crash. See *Vehicle Load Limits* ➪ *123*.
- Underinflated tires pose the same danger as overloaded tires. The resulting crash could cause serious injury. Check all tires frequently to maintain the recommended pressure. Tire pressure should be checked when the tires are cold.
- Overinflated tires are more likely to be cut, punctured, or broken by a sudden impact — such as when hitting a pothole. Keep tires at the recommended pressure.
- Worn or old tires can cause a crash. If the tread is badly worn, replace them.

(Continued)

Warning (Continued)

- Replace any tires that have been damaged by impacts with potholes, curbs, etc.
- Improperly repaired tires can cause a crash. Only your dealer or an authorized tire service center should repair, replace, dismount, and mount the tires.
- Do not spin the tires in excess of 56 km/h (35 mph) on slippery surfaces such as snow, mud, ice, etc. Excessive spinning may cause the tires to explode.

All-Season Tires

This vehicle may come with all-season tires. These tires are designed to provide good overall performance on most road surfaces and weather conditions. Original equipment tires designed to GM's specific Tire Performance Criteria (TPC) have a TPC specification code molded onto the sidewall.

Consider installing winter tires on the vehicle if frequent driving on snow or ice-covered roads is expected. All-season tires provide adequate performance for most winter driving conditions, but they may not offer the same level of traction or performance as winter tires on snow or ice-covered roads. See “Winter Tires” following.

Winter Tires

This vehicle was not originally equipped with winter tires. Winter tires are designed for increased traction on snow and ice-covered roads. Consider installing winter tires on the vehicle if frequent driving on ice or snow covered roads is expected. See your dealer for details regarding winter tire availability and proper tire selection. Also, see *Buying New Tires* ➪ *199*.

With winter tires, there may be decreased dry road traction, increased road noise, and shorter tread life. After changing to winter tires, be alert for changes in vehicle handling and braking.

If using winter tires:

- Use tires of the same brand and tread type on all four wheel positions.

- Use only radial ply tires of the same size, load range, and speed rating as the original equipment tires.

Winter tires with the same speed rating as the original equipment tires may not be available for H, V, W, Y, and ZR speed rated tires. If winter tires with a lower speed rating are chosen, never exceed the tire's maximum speed capability.

Tire Sidewall Labeling

Useful information about a tire is molded into its sidewall. The example shows a typical light truck tire sidewall.

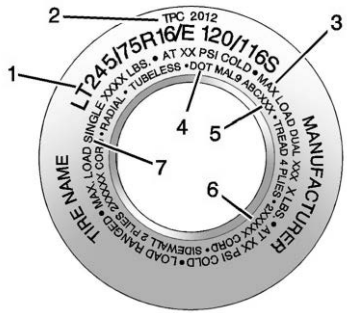

Light Truck (LT-Metric) Tire

(1) Tire Size : The tire size code is a combination of letters and numbers used to define a particular tire's width, height, aspect ratio, construction type, and service description. See the "Tire Size" illustration later in this section for more detail.

(2) TPC Spec (Tire Performance Criteria Specification) : Original equipment tires designed to GM's specific tire performance criteria have a TPC specification code molded onto the sidewall. GM's TPC specifications meet or exceed all federal safety guidelines.

(3) Dual Tire Maximum Load : Maximum load that can be carried and the maximum pressure needed to support that load when used in a dual configuration. For information on recommended tire pressure see *Tire Pressure* ⇨ *192* and *Vehicle Load Limits* ⇨ *123*.

(4) DOT (Department of Transportation) : The Department of Transportation (DOT) code indicates that the tire is in compliance with the U.S. Department of Transportation Motor Vehicle Safety Standards.

DOT Tire Date of Manufacture : The last four digits of the TIN indicate the tire manufactured date. The first two digits represent the week and the last two digits, the year. For example, the third week of the year 2020 would have a 4-digit DOT date of 0320. Week 01 is the first full week (Sunday through Saturday) of each year.

(5) Tire Identification Number (TIN) : The letters and numbers following the DOT code are the Tire Identification Number (TIN). The TIN shows the manufacturer

and plant code, tire size, and date the tire was manufactured. The TIN is molded onto both sides of the tire, although only one side may have the date of manufacture.

(6) Tire Ply Material : The type of cord and number of plies in the sidewall and under the tread.

(7) Single Tire Maximum Load : Maximum load that can be carried and the maximum pressure needed to support that load when used as a single. For information on recommended tire pressure see *Tire Pressure* ⇨ *192* and *Vehicle Load Limits* ⇨ *123*.

Tire Designations

Tire Size

The examples show a typical light truck tire size.

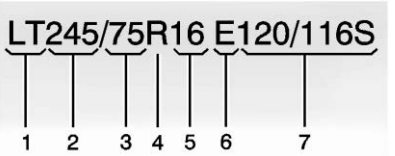

Light Truck (LT-Metric) Tire

(1) Light Truck (LT-Metric) Tire : The United States version of a metric tire sizing system. The letters LT as the first two characters in the tire size mean a light truck tire engineered to standards set by the U.S. Tire and Rim Association.

(2) Tire Width : The 3-digit number indicates the tire section width in millimeters from sidewall to sidewall.

(3) Aspect Ratio : A 2-digit number that indicates the tire height-to-width measurements. For example, if the tire size aspect ratio is 75, as shown in item (3) of the light truck (LT-Metric) tire illustration, it would mean that the tire's sidewall is 75 percent as high as it is wide.

(4) Construction Code : A letter code is used to indicate the type of ply construction in the tire. The letter R means radial ply construction; the letter D means diagonal or bias ply construction.

(5) Rim Diameter : Diameter of the wheel in inches.

(6) Load Range : Load Range.

(7) Service Description : The service description indicates the load index and speed rating of a tire. If two numbers are given as in the example, 120/116, then this represents the load index for single versus dual wheel usage (single/dual). The speed rating is the maximum speed a tire is certified to carry a load.

Tire Terminology and Definitions

Air Pressure : The amount of air inside the tire pressing outward on each square inch of the tire. Air pressure is expressed in kPa (kilopascal) or psi (pounds per square inch).

Aspect Ratio : The relationship of a tire's height to its width.

Belt : A rubber coated layer of cords that is located between the plies and the tread. Cords may be made from steel or other reinforcing materials.

Bead : The tire bead contains steel wires wrapped by steel cords that hold the tire onto the rim.

Bias Ply Tire : A pneumatic tire in which the plies are laid at alternate angles less than 90 degrees to the centerline of the tread.

Cold Tire Pressure : The amount of air pressure in a tire, measured in kPa (kilopascal) or psi (pounds per square inch) before a tire has built up heat from driving. See *Tire Pressure* ➪ *192*.

DOT Markings : A code molded into the sidewall of a tire signifying that the tire is in compliance with the U.S. Department of Transportation (DOT) Motor Vehicle Safety Standards. The DOT code includes the Tire Identification Number (TIN), an alphanumeric designator which can also identify the tire manufacturer, production plant, brand, and date of production.

GVWR : Gross Vehicle Weight Rating. See *Vehicle Load Limits* ➪ *123*.

GAWR FRT : Gross Axle Weight Rating for the front axle. See *Vehicle Load Limits* ➪ *123*.

GAWR RR : Gross Axle Weight Rating for the rear axle. See *Vehicle Load Limits* ➪ *123*.

Intended Outboard Sidewall : The side of an asymmetrical tire, that must always face outward when mounted on a vehicle.

Kilopascal (kPa) : The metric unit for air pressure.

Light Truck (LT-Metric) Tire : A tire used on light duty trucks and some multipurpose passenger vehicles.

Load Index : An assigned number ranging from 1 to 279 that corresponds to the load carrying capacity of a tire.

Maximum Inflation Pressure : The maximum air pressure to which a cold tire can be inflated. The maximum air pressure is molded onto the sidewall.

Maximum Load Rating : The load rating for a tire at the maximum permissible inflation pressure for that tire.

Occupant Distribution : Designated seating positions.

Outward Facing Sidewall : The side of an asymmetrical tire that has a particular side that faces outward when mounted on a vehicle. The side of the tire that contains a whitewall, bears white lettering, or bears manufacturer, brand, and/or model name molding that is higher or deeper than the same moldings on the other sidewall of the tire.

Passenger (P-Metric) Tire : A tire used on passenger cars and some light duty trucks and multipurpose vehicles.

Recommended Inflation Pressure : Vehicle manufacturer's recommended tire inflation pressure as shown on the tire placard. See *Tire Pressure* ➪ *192* and *Vehicle Load Limits* ➪ *123*.

Radial Ply Tire : A pneumatic tire in which the ply cords that extend to the beads are laid at 90 degrees to the centerline of the tread.

Rim : A metal support for a tire and upon which the tire beads are seated.

Sidewall : The portion of a tire between the tread and the bead.

Speed Rating : An alphanumeric code assigned to a tire indicating the maximum speed at which a tire can operate.

Traction : The friction between the tire and the road surface. The amount of grip provided.

Tread : The portion of a tire that comes into contact with the road.

Treadwear Indicators : Narrow bands, sometimes called wear bars, that show across the tread of a tire when only 1.6 mm (1/16 in) of tread remains. See *When It Is Time for New Tires* ⇨ *198*.

UTQGS (Uniform Tire Quality Grading Standards) : A tire information system that provides consumers with ratings for a tire's traction, temperature, and treadwear. Ratings are determined by tire manufacturers using government testing procedures. The ratings are molded into the sidewall of the tire. See *Uniform Tire Quality Grading* ⇨ *200*.

Vehicle Capacity Weight : The number of designated seating positions multiplied by 68 kg (150 lbs) plus the rated cargo load. See *Vehicle Load Limits* ⇨ *123*.

Vehicle Maximum Load on the Tire : Load on an individual tire due to curb weight, accessory weight, occupant weight, and cargo weight.

Vehicle Placard : A label permanently attached to a vehicle showing the vehicle's capacity weight and the original equipment tire size and recommended inflation pressure. See “Tire and Loading Information Label” under *Vehicle Load Limits* ⇨ *123*.

Tire Pressure

Tires need the correct amount of air pressure to operate effectively.

⚠ Warning

Neither tire underinflation nor overinflation is good. Underinflated tires, or tires that do not have enough air, can result in:

- Tire overloading and overheating, which could lead to a blowout
- Premature or irregular wear
- Poor handling
- Reduced fuel economy for internal combustion engine vehicles
- Reduced range for electric vehicles

Overinflated tires, or tires that have too much air, can result in:

- Unusual wear
- Poor handling
- Rough ride
- Needless damage from road hazards

The Tire and Loading Information label on the vehicle indicates the original equipment tires and the correct cold tire inflation pressures. The recommended pressure is the minimum air pressure needed to support the vehicle's maximum load carrying capacity.

For additional information regarding how much weight the vehicle can carry, and an example of the Tire and Loading Information label, see *Vehicle Load Limits* ⇨ *123*. How the vehicle is loaded affects vehicle handling and ride comfort. Never load the vehicle with more weight than it was designed to carry.

When to Check

Check the pressure of the tires once a month or more.

Do not forget the spare, if the vehicle has one. See *Full-Size Spare Tire* ⇨ *212* for additional information.

How to Check

Use a good quality pocket-type gauge to check tire pressure. Proper tire inflation cannot be determined by looking at the tire. Check the tire inflation pressure when the tires are cold, meaning the vehicle has not been driven for at least three hours or no more than 1.6 km (1 mi).

Remove the valve cap from the tire valve stem. Press the tire gauge firmly onto the valve to get a pressure measurement. If the cold tire inflation pressure matches the recommended pressure on the Tire and Loading Information label, no further adjustment is necessary. If the inflation pressure is low, add air until the recommended pressure is reached. If the inflation pressure is high, press on the metal stem in the center of the tire valve to release air.

Re-check the tire pressure with the tire gauge.

Put the valve caps back on the valve stems to keep out dirt and moisture. Use only valve caps designed for the vehicle by GM. TPMS sensors could be damaged and would not be covered by the vehicle warranty.

Tire Pressure Monitor System

The Tire Pressure Monitor System (TPMS) uses radio and sensor technology to check tire pressure levels. The TPMS sensors monitor the air pressure in your tires and transmit tire pressure readings to a receiver located in the vehicle.

Each tire, including the spare (if provided), should be checked monthly when cold and inflated to the inflation pressure recommended by the vehicle manufacturer on the vehicle placard or tire inflation pressure label. (If your vehicle has tires of a different size than the size indicated on the vehicle placard or tire inflation pressure label, you should determine the proper tire inflation pressure for those tires.)

As an added safety feature, your vehicle has been equipped with a tire pressure monitoring system (TPMS) that illuminates a low tire pressure telltale when one or more of your tires is significantly under-inflated.

Accordingly, when the low tire pressure telltale illuminates, you should stop and check your tires as soon as possible, and inflate them to the proper pressure. Driving on a significantly under-inflated tire causes the tire to overheat and can lead to tire failure. Under-inflation also reduces energy efficiency and tire tread life, and may affect the vehicle's handling and stopping ability.

Please note that the TPMS is not a substitute for proper tire maintenance, and it is the driver's responsibility to maintain correct tire pressure, even if under-inflation has not reached the level to trigger illumination of the TPMS low tire pressure telltale.

Your vehicle has also been equipped with a TPMS malfunction indicator to indicate when the system is not operating properly. The TPMS malfunction indicator is combined with the low tire pressure telltale. When the system detects a malfunction, the telltale will flash for approximately one minute and then remain continuously illuminated. This sequence will continue upon subsequent vehicle start-ups as long as the malfunction exists.

When the malfunction indicator is illuminated, the system may not be able to detect or signal low tire pressure as intended.

TPMS malfunctions may occur for a variety of reasons, including the installation of replacement or alternate tires or wheels on the vehicle that prevent the TPMS from functioning properly. Always check the TPMS malfunction telltale after replacing one or more tires or wheels on your vehicle to ensure that the replacement or alternate tires and wheels allow the TPMS to continue to function properly.

See “Tire Pressure Monitor Operation” following.

See *Radio Frequency Statement* ⇨ *246*.

Tire Pressure Monitor Operation

This vehicle may have a Tire Pressure Monitor System (TPMS). The TPMS is designed to warn the driver when a low tire pressure condition exists. TPMS sensors are mounted onto each tire and wheel assembly, excluding the spare tire and wheel assembly. The TPMS sensors monitor the air pressure in the tires and transmit the tire pressure readings to a receiver located in the vehicle.

When a low tire pressure condition is detected, the TPMS illuminates the low tire pressure warning light located on the instrument cluster. If the warning light comes on, stop as soon as possible and inflate the tires to the recommended pressure shown on the Tire and Loading Information label. See *Vehicle Load Limits* ⇨ *123*.

A message to check the pressure in a specific tire displays in the Driver Information Center (DIC). The low tire pressure warning light and the DIC warning message come on each time the vehicle is started until the tires are inflated to the correct inflation pressure. If the vehicle has DIC buttons, tire pressure levels can be viewed. For additional information and details about the DIC operation and displays, see *Driver Information Center (DIC)* ⇨ *82*.

The low tire pressure warning light may come on in cool weather when the vehicle is first started, and then turn off as the vehicle is

driven. This could be an early indicator that the air pressure is getting low and needs to be inflated to the proper pressure.

A Tire and Loading Information label shows the size of the original equipment tires and the correct inflation pressure for the tires when they are cold. See *Vehicle Load Limits* ➪ *123*, for an example of the Tire and Loading Information label and its location. Also see *Tire Pressure* ➪ *192*.

The TPMS can warn about a low tire pressure condition but it does not replace normal tire maintenance. See *Tire Inspection* ➪ *196*, *Tire Rotation* ➪ *197*, and *Tires* ➪ *187*.

Caution
Tire sealant materials are not all the same. A non-approved tire sealant could damage the TPMS sensors. TPMS sensor damage caused by using an incorrect tire sealant is not covered by the vehicle warranty. Always use only the GM approved tire sealant available through your dealer or included in the vehicle.

TPMS Malfunction Light and Message

The TPMS will not function properly if one or more of the TPMS sensors are missing or inoperable. When the system detects a malfunction, the low tire pressure warning light flashes for about one minute and then stays on until the vehicle is turned off. A DIC warning message also displays. The malfunction light and DIC warning message come on each time the vehicle is started until the problem is corrected. Some of the conditions that can cause these to come on are:

- One of the road tires has been replaced with the spare tire. The spare tire does not have a TPMS sensor. The malfunction light and the DIC message should go off after the road tire is replaced and the sensor matching process is performed successfully. See "TPMS Sensor Matching Process" later in this section.
- The TPMS sensor matching process was not done or not completed successfully after rotating the tires. The malfunction light and the DIC message should go off after successfully completing the sensor matching process. See "TPMS Sensor Matching Process" later in this section.
- One or more TPMS sensors are missing or damaged. The malfunction light and the DIC message should go off when the TPMS sensors are installed and the sensor matching process is performed successfully. See your dealer for service.
- Replacement tires or wheels do not match the original equipment tires or wheels. Tires and wheels other than those recommended could prevent the TPMS from functioning properly. See *Buying New Tires* ➪ *199*.
- Operating electronic devices or being near facilities using radio wave frequencies similar to the TPMS could cause the TPMS sensors to malfunction.

If the TPMS is not functioning properly, it cannot detect or signal a low tire pressure condition. See your dealer for service if the TPMS malfunction light and DIC message come on and stay on.

TPMS Sensor Matching Process

Each TPMS sensor has a unique identification code. The identification code needs to be matched to a new tire/wheel position after rotating the vehicle’s tires or replacing one

or more of the TPMS sensors. Also, the TPMS sensor matching process should be performed after replacing a spare tire with a road tire containing the TPMS sensor. The malfunction light and the DIC message should go off the next time the vehicle is started. The sensors are matched to the tire/wheel positions, using a TPMS relearn tool, in the following order: driver side front tire, passenger side front tire, passenger side rear tire, and driver side rear. See your dealer for service or to purchase a relearn tool. A TPMS relearn tool can also be purchased. See "TPMS Tool" at www.gmglobaltools.com or call 844-742-8471.

There are two minutes to match the first tire/wheel position, and five minutes overall to match all four tire/wheel positions. If it takes longer, the matching process stops and must be restarted.

The TPMS sensor matching process is:

1. Set the parking brake.
2. Turn the ignition on without starting the vehicle. See *Ignition Positions* ⇨ *127*.
3. Press the Remote Keyless Entry (RKE) transmitter's 🔒 and 🔓 buttons at the same time for approximately five seconds. The horn sounds twice to signal the receiver is in relearn mode and TIRE LEARNING ACTIVE message displays on the DIC screen.

   If the vehicle does not have RKE, press the Driver Information Center (DIC) vehicle information button until the PRESS reset TO RELEARN TIRE POSITIONS message displays. The horn sounds twice to signal the receiver is in relearn mode and TIRE LEARNING ACTIVE message displays on the DIC screen.
4. Start with the driver side front tire.
5. Place the relearn tool against the tire sidewall, near the valve stem. Then press the button to activate the TPMS sensor. The horn sounds once to confirm that the sensor identification code has been matched to this tire and wheel position.
6. Proceed to the passenger side front tire, and repeat the procedure in Step 5.
7. Proceed to the passenger side rear tire, and repeat the procedure in Step 5.
8. Proceed to the driver side rear tire, and repeat the procedure in Step 5. The horn sounds two times to indicate the sensor identification code has been matched to the driver side rear tire, and the TPMS sensor matching process is no longer active. The TIRE LEARNING ACTIVE message on the DIC display screen goes off.
9. Turn the vehicle off.
10. Set all four tires to the recommended air pressure level as indicated on the Tire and Loading Information label.

Tire Inspection

We recommend that the tires, including the spare tire, if the vehicle has one, be inspected for signs of wear or damage at least once a month.

Replace the tire if:

- The indicators at three or more places around the tire can be seen.
- There is cord or fabric showing through the tire's rubber.
- The tread or sidewall is cracked, cut, or snagged deep enough to show cord or fabric.
- The tire has a bump, bulge, or split.

- The tire has a puncture, cut, or other damage that cannot be repaired well because of the size or location of the damage.

Tire Rotation

Tires should be rotated according to the interval specified in the Maintenance Schedule. See *Maintenance Schedule* ⇨ *226*.

When rotating the tires, inspect the brake pads for signs of wear. See *Brakes* ⇨ *171*.

Tires are rotated to achieve a more uniform wear for all tires. The first rotation is the most important.

Anytime unusual wear is noticed, rotate the tires as soon as possible, check for proper tire inflation pressure, and check for damaged tires or wheels. If the unusual wear continues after the rotation, check the wheel alignment. See *When It Is Time for New Tires* ⇨ *198* and *Wheel Replacement* ⇨ *202*.

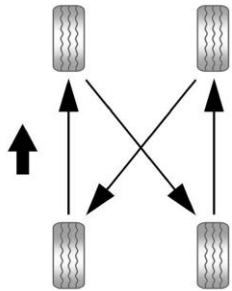

Use this rotation pattern when rotating the tires if the vehicle has single rear wheels.

Dual Tire Rotation

When the vehicle is new, or whenever a wheel, wheel bolt, or wheel nut is replaced or serviced, check the wheel nut torque after 160, 1 600, and 10 000 km (100, 1,000, and 6,000 mi) of driving. For proper torque and wheel nut tightening information, see "Removing the Flat Tire and Installing the Spare Tire" under *Tire Changing* ⇨ *204* and "Wheel Nut Torque" under *Capacities and Specifications* ⇨ *232*.

The outer tire on a dual wheel setup generally wears faster than the inner tire. Tires last longer and wear more evenly if they are rotated. See *Tire Inspection* ⇨ *196* and *Tire Rotation* ⇨ *197*. Also see *Maintenance Schedule* ⇨ *226*.

If the full-size spare tire is part of the tire rotation, make sure the tire rotated into the spare position is stored securely. Push, pull, and then try to rotate or turn the tire. If it moves, use the wheel wrench/hoist shaft to tighten the cable. See *Tire Changing* ⇨ *204*.

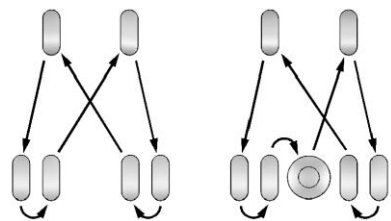

Use this rotation pattern when rotating the tires if the vehicle has dual rear wheels.

When installing dual wheels, check that the vent holes in the inner and outer wheels on each side are lined up.

Adjust the front and rear tires to the recommended inflation pressure on the Tire and Loading Information label after the tires have been rotated. See *Tire Pressure* ⇨ *192* and *Vehicle Load Limits* ⇨ *123*.

Reset the Tire Pressure Monitor System. See *Tire Pressure Monitor Operation* ⇨ *194*.

⚠ Warning

Rust or dirt on a wheel, or on the parts to which it is fastened, can cause wheel nuts to become loose over time. The wheel could come off and cause a crash. When changing a wheel, remove any rust or dirt from places where the wheel attaches to the vehicle. In an

(Continued)

Warning (Continued)

emergency, a cloth or paper towel can be used; however, use a scraper or wire brush later to remove all rust or dirt.

⚠ Warning

Do not apply grease to the wheel mounting surface, wheel conical seats, or the wheel nuts or bolts. Grease applied to these areas could cause a wheel to become loose or come off, resulting in a crash.

Check that all wheel nuts are properly tightened. See “Wheel Nut Torque” under *Capacities and Specifications* ⇨ *232*, and “Removing the Flat Tire and Installing the Spare Tire” under *Tire Changing* ⇨ *204*.

Lightly coat the inner diameter of the wheel hub opening with wheel bearing grease after a wheel change or tire rotation to prevent corrosion or rust build-up.

When It Is Time for New Tires

Factors, such as maintenance, temperatures, driving speeds, vehicle loading, and road conditions affect the wear rate of the tires.

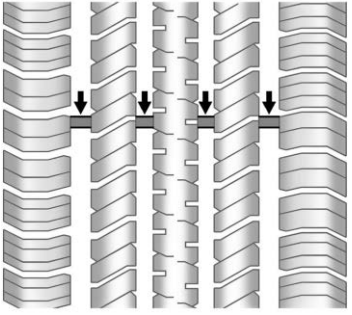

Treadwear indicators are one way to tell when it is time for new tires. Treadwear indicators appear when the tires have only 1.6 mm (1/16 in) or less of tread remaining. See *Tire Inspection* ⇨ *196* and *Tire Rotation* ⇨ *197*.

The rubber in tires ages over time. This also applies to the spare tire, if the vehicle has one, even if it is never used. Multiple factors including temperatures, loading conditions, and inflation pressure maintenance affect how fast aging takes place. GM recommends

that tires, including the spare if equipped, be replaced after six years, regardless of tread wear. To identify the age of a tire, use the tire manufacture date, which is the last four digits of the DOT Tire Identification Number (TIN) molded into one side of the tire sidewall. The last four digits of the TIN indicate the tire manufactured date. The first two digits represent the week and the last two digits, the year. For example, the third week of the year 2020 would have a 4-digit DOT date of 0320. Week 01 is the first full week (Sunday through Saturday) of each year.

Vehicle Storage

Tires age when stored normally mounted on a parked vehicle. Park a vehicle that will be stored for at least a month in a cool, dry, clean area away from direct sunlight to slow aging. This area should be free of grease, gasoline, or other substances that can deteriorate rubber.

Parking for an extended period can cause flat spots on the tires that may result in vibrations while driving. When storing a vehicle for at least a month, remove the tires or raise the vehicle to reduce the weight from the tires.

Buying New Tires

GM has developed and matched specific tires for the vehicle. The original equipment tires installed were designed to meet General Motors Tire Performance Criteria Specification (TPC Spec) system rating. When replacement tires are needed, GM strongly recommends buying tires with the same TPC Spec rating.

GM's exclusive TPC Spec system considers over a dozen critical specifications that impact the overall performance of the vehicle, including brake system performance, ride and handling, traction control, and tire pressure monitoring performance. GM's TPC Spec number is molded onto the tire's sidewall near the tire size.

⚠ Warning

Tires could explode during improper service. Attempting to mount or dismount a tire could cause injury or

(Continued)

Warning (Continued)

death. Only your dealer or authorized tire service center should mount or dismount the tires.

⚠ Warning

Mixing tires of different sizes (other than those originally installed on the vehicle), brands, tread patterns, or types may cause loss of vehicle control, resulting in a crash or other vehicle damage. Use the correct size, brand, and type of tire on all wheels.

GM recommends replacing worn tires in complete sets of four (six for dual rear wheels). Uniform tread depth on all tires will help to maintain the performance of the vehicle. Braking and handling performance may be adversely affected if all the tires are not replaced at the same time. If proper rotation and maintenance have been done, all four tires (six for dual rear wheels) should wear out at about the

same time. However, if it is necessary to replace only one axle set of worn tires, place the new tires on the rear axle (two for single rear wheels, four for dual rear wheels). See *Tire Rotation* ⇨ *197*.

Winter tires with the same speed rating as the original equipment tires may not be available for H, V, W, Y and ZR speed rated tires. Never exceed the winter tires' maximum speed capability when using winter tires with a lower speed rating.

⚠ Warning

Using bias-ply tires on the vehicle may cause the wheel rim flanges to develop cracks after many miles of driving. A tire and/or wheel could fail suddenly and cause a crash. Use only radial-ply tires with the wheels on the vehicle.

If the vehicle tires must be replaced with a tire that does not have a TPC Spec number, make sure they are the same size, load range, speed rating, and construction (radial) as the original tires.

The Tire and Loading Information label indicates the original equipment tires on the vehicle. See *Vehicle Load Limits* ⇨ *123*.

Different Size Tires and Wheels

⚠ Warning

If different sized wheels are used, there may not be an acceptable level of performance and safety if tires not recommended for those wheels are selected. This increases the chance of a crash and serious injury. Only use GM specific wheel and tire systems developed for the vehicle, and have them properly installed by a GM certified technician.

If wheels or tires are installed that are a different size than the original equipment wheels and tires, vehicle performance, including its braking, ride and handling characteristics, stability, and resistance to rollover may be affected. If the vehicle has electronic systems such as antilock brakes, rollover airbags, traction control, electronic stability control, or all-wheel drive, the performance of these systems can also be affected.

See *Buying New Tires* ⇨ *199* and *Accessories and Modifications* ⇨ *155*.

Uniform Tire Quality Grading

The following information relates to the system developed by the United States National Highway Traffic Safety Administration (NHTSA), which grades tires by treadwear, traction, and temperature performance. This applies only to vehicles sold in the United States. The grades are molded on the sidewalls of most passenger car tires. The Uniform Tire Quality Grading (UTQG) system does not apply to deep tread, winter tires, compact spare tires, tires with nominal rim diameters of 10 to 12 inches (25 to 30 cm), or to some limited-production tires.

While the tires available on General Motors passenger cars and light trucks may vary with respect to these grades, they must also conform to federal

safety requirements and additional General Motors Tire Performance Criteria (TPC) standards.

Quality grades can be found where applicable on the tire sidewall between tread shoulder and maximum section width. For example:

Treadwear 200 Traction AA Temperature A

All Passenger Car Tires Must Conform to Federal Safety Requirements In Addition To These Grades.

Treadwear

The treadwear grade is a comparative rating based on the wear rate of the tire when tested under controlled conditions on a specified government test course. For example, a tire graded 150 would wear one and one-half (1½) times as well on the government course as a tire graded 100. The relative performance of tires depends upon the actual conditions of their use, however, and may depart significantly from the norm due to variations in driving habits, service practices and differences in road characteristics and climate.

Traction

The traction grades, from highest to lowest, are AA, A, B, and C. Those grades represent the tire's ability to stop on wet pavement as measured under controlled conditions on specified government test surfaces of asphalt and concrete. A tire marked C may have poor traction performance. Warning: The traction grade assigned to this tire is based on straight-ahead braking traction tests, and does not include acceleration, cornering, hydroplaning, or peak traction characteristics.

Temperature

The temperature grades are A (the highest), B, and C, representing the tire's resistance to the generation of heat and its ability to dissipate heat when tested under controlled conditions on a specified indoor laboratory test wheel. Sustained high temperature can cause the material of the tire to degenerate and reduce tire life, and excessive temperature can lead to sudden tire failure. The grade C corresponds to a level of performance which all passenger car tires must meet under the Federal Motor Safety Standard No. 109. Grades B and A represent higher levels of performance on the laboratory test wheel than the minimum required by law. Warning: The temperature grade for this tire is established for a tire that is properly inflated and not overloaded. Excessive speed, underinflation, or excessive loading, either separately or in combination, can cause heat buildup and possible tire failure.

Wheel Alignment and Tire Balance

The tires and wheels were aligned and balanced at the factory to provide the longest tire life and best overall performance. Adjustments to wheel alignment and tire balancing are not necessary on a regular basis. Consider an alignment check if there is unusual tire wear or

the vehicle is significantly pulling to one side or the other. Some slight pull to the left or right, depending on the slope of the road and/or other road surface variations such as troughs or ruts, is normal. If the vehicle is vibrating when driving on a smooth road, the tires and wheels may need to be rebalanced. See your dealer for proper diagnosis.

Wheel Replacement

Warning

Using the wrong replacement wheels, wheel bolts, or wheel nuts can be dangerous. It could affect the braking and handling of the vehicle. Tires can lose air and cause loss of control, resulting in a crash. Always use the correct wheel, wheel bolts, and wheel nuts for replacement.

Warning

Replacing a wheel with a used one is dangerous. How it has been used or how far it has been driven may be unknown. It could fail suddenly and cause a crash. When replacing wheels, use a new GM original equipment wheel.

Caution

The wrong wheel can also cause problems with bearing life, brake cooling, speedometer or odometer calibration, headlight aim, bumper height, vehicle ground clearance, and tire or tire chain clearance to the body and chassis.

Replace any wheel that is bent, cracked, or badly rusted or corroded. If wheel nuts keep coming loose, the wheel, wheel bolts, and wheel nuts should be replaced. If the wheel leaks air, replace it. Some aluminum wheels can be repaired. See your dealer if any of these conditions exist.

Your dealer will know the kind of wheel that is needed.

Each new wheel should have the same load-carrying capacity, diameter, width, offset, and be mounted the same way as the one it replaces.

Replace wheels, wheel bolts, wheel nuts, or Tire Pressure Monitor System sensors with new GM original equipment parts.

Tire Chains and Other Traction Devices

Warning

Tire chains or other traction devices used on a vehicle without the proper amount of clearance can cause damage to the brakes, suspension, or other vehicle parts. Use tire chains or traction devices only if the equipment manufacturer recommends them for the vehicle tire size combination and road conditions. Follow the equipment manfacturer's instructions. The area damaged by the tire chains could cause you to lose control of the vehicle and you or others may be injured in a crash. To help avoid damage to the vehicle, drive

(Continued)

Warning (Continued)

slowly, readjust, or remove the device if it is contacting the vehicle. Do not spin the vehicle's tires.

Caution

Use tire chains only where legal and only when necessary. Use chains that are the proper size for the tires. Install them on the tires of the rear axle. Do not use chains on the tires of the front axle. Tighten them as tightly as possible with the ends securely fastened. Drive slowly and follow the chain manufacturer's instructions. If the chains contact the vehicle, stop and retighten them. If the contact continues, slow down until it stops. Driving too fast or spinning the wheels with chains on will damage the vehicle.

For Cutaway models with LT245/75R16 or LT225/75R16 size single or dual rear tires, use Low Profile Z-Chain or SAE Class S cables.

For Cargo or Passenger models with LT225/75R16 or LT245/75R16 size tires, use Low Profile Z-Chain cables. SAE Class S chains are not recommended.

If the vehicle has dual rear tires, do not use individual tire chains. Use tire chains that fit across both dual tires.

If a Tire Goes Flat

⚠ Warning

Driving on a flat tire will cause permanent damage to the tire. Re-inflating a tire after it has been driven on while severely underinflated or flat may cause a blowout and a serious crash. Never attempt to re-inflate a tire that has been driven on while severely underinflated or flat. Have your dealer or an authorized tire service center repair or replace the flat tire as soon as possible.

It is unusual for a tire to blow out while driving, especially if the tires are maintained properly. It is much more likely for a tire to experience a slow leak. See *Tires* ➪ *187*.

In the event of a blowout, follow these tips:

- A front tire blowout causes the vehicle to pull toward the side of the flat. Take your foot off the accelerator pedal and grip the steering wheel firmly. Steer to maintain lane position, and then gently brake to a stop.
- A rear blowout, particularly on a curve, acts much like a skid and may require the same correction as used in a skid. Stop pressing the accelerator pedal and steer to straighten the vehicle. It may be very bumpy and noisy. Gently brake to a stop.

If a tire goes flat, avoid further tire and wheel damage by driving slowly to a level place, well off the road, if possible. Turn on the hazard warning flashers. See *Hazard Warning Flashers* ➪ *93*.

⚠ Warning

Lifting a vehicle and getting under it to do maintenance or repairs is dangerous without the appropriate safety equipment and training. If a jack is provided with the vehicle, it is designed only for changing

(Continued)

Warning (Continued)

a flat tire. If it is used for anything else, you or others could be badly injured or killed if the vehicle slips off the jack. If a jack is provided with the vehicle, only use it for changing a flat tire.

If your vehicle is loaded at or near maximum cargo capacity, it may be difficult to fit the jack under the vehicle due to the environment (shoulder slope, road debris, etc.). Removal of some weight may improve the ability to fit the jack under the vehicle at the correct jacking location.

⚠ Warning

Changing a tire can be dangerous. The vehicle can slip off the jack and roll over or fall causing injury or death. Find a level place to change the tire. To help prevent the vehicle from moving:

1. Set the parking brake firmly.
2. Put the vehicle in P (Park).

(Continued)

Warning (Continued)

3. Turn the vehicle off and do not restart the vehicle while it is raised.
4. Do not allow passengers to remain in the vehicle.
5. Place wheel blocks, if equipped, on both sides of the tire at the opposite corner of the tire being changed.

To safely change a flat tire:

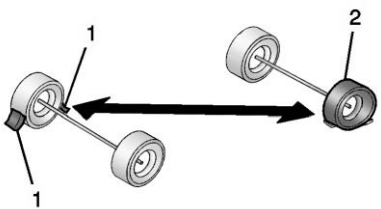

1. If equipped, place wheel blocks (1), as shown, to prevent the vehicle from moving.
2. Use the jacking equipment to change the flat tire (2). See *Tire Changing* ➪ *204*.

Tire Changing

Removing the Spare Tire and Tools

Equipment needed for a cargo van or a passenger van is in the passenger side rear corner of the vehicle.

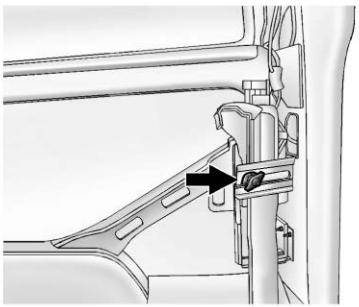

Remove the retaining wing bolt and lift it off of the mounting bracket.

Equipment needed for a 15-passenger seating arrangement is secured on the rear floor on the passenger side of the vehicle.

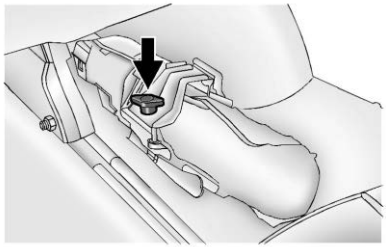

Remove the retaining wing bolt and lift it out of the mounting bracket to access the equipment.

The tools you will be using include:

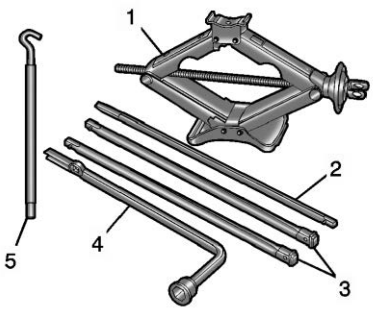

1. Jack
2. Hoist Handle
3. Extension(s)
4. Wheel Wrench
5. Jack Handle

The spare tire is mounted in the rear underbody of the vehicle.

Use the hoist handle, extension(s), and the wheel wrench to remove the underbody-mounted spare tire.

To lower the spare tire from the vehicle:

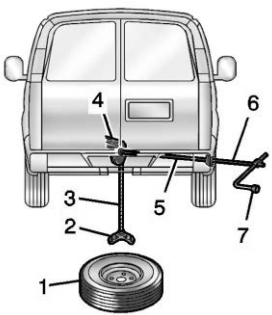

1. Spare Tire
2. Tire/Wheel Retainer
3. Hoist Cable
4. Hoist Assembly
5. Hoist Shaft
6. Hoist Handle and Extension(s)
7. Wheel Wrench

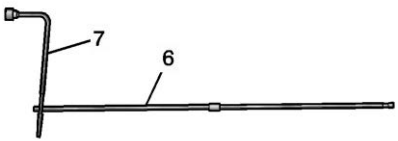

1. Assemble the wheel wrench (7) to the hoist handle and the extension(s) (6).
2. Open the passenger side rear door.
3. Insert the chisel end of the hoist handle, on an angle, through the hole in the rear floor panel above the bumper.

   Be sure the hoist handle connects to the hoist shaft. The chiseled end of the hoist handle is used to lower the spare tire.
4. Turn the wheel wrench counterclockwise to lower the spare tire to the ground. Continue to turn the wheel wrench until the spare tire can be pulled out from under the vehicle.

5. Pull the spare tire out from under the vehicle.

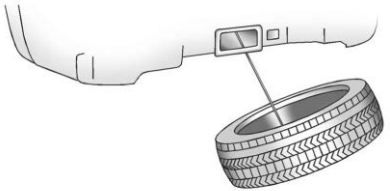

6. Tilt the tire toward the vehicle with some slack in the cable to access the tire/wheel retainer.

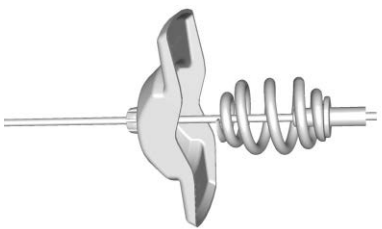

Tilt the retainer and pull it through the center of the wheel along with the cable and spring.

For a vehicle that was completed from a cab and chassis, refer to the information from the body supplier/installer.

The spare tire is a full-size tire, like the other tires on the vehicle.

7. Put the spare tire near the flat tire.
8. Close the passenger side rear door.

Removing the Flat Tire and Installing the Spare Tire

If the vehicle has plastic wheel nut caps, loosen them by turning the wheel wrench counterclockwise. The wheel nut caps are designed to remain with the center cap. Remove the center cap.

If the wheel has a smooth center piece, place the chisel end of the wheel wrench in the slot on the wheel and gently pry it out.

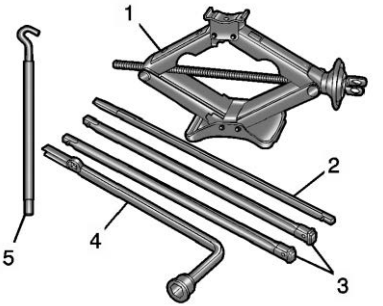

1. Jack
2. Hoist Handle
3. Extension(s)
4. Wheel Wrench
5. Jack Handle

1. Do a safety check before proceeding. See *If a Tire Goes Flat* ⇨ *203*.

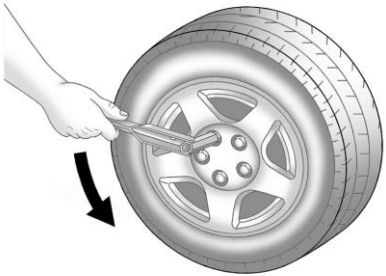

2. Turn the wheel wrench counterclockwise to loosen all the wheel nuts, but do not remove them yet.

Caution
Make sure that the jack lift head is in the correct position or you may damage your vehicle. The repairs would not be covered by your warranty.

3. Assemble the jack and tools:

   Front Flat: Assemble the jack (1) together with the jack handle (5), one or two extension(s) (3), and the wheel wrench (4).

   Rear Flat: Assemble the jack (1) together with the jack handle (5), two extensions (3), and the wheel wrench (4).

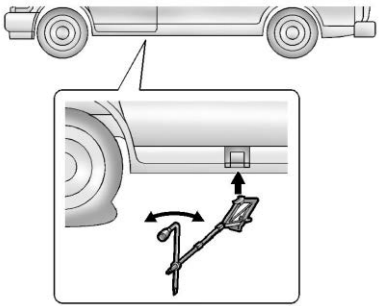

Front Position

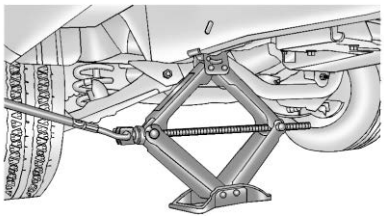

Front Position

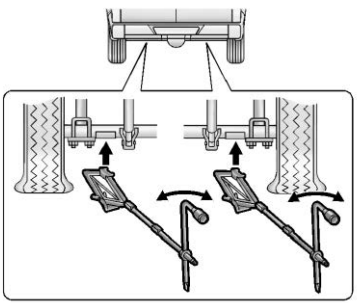

Rear Position

4. Position the jack under the vehicle, as shown.

   The front position jacking point is on the frame. The rear position jacking point is on the rear axle.

⚠ Warning

Getting under a vehicle when it is jacked up is dangerous. If the vehicle slips off the jack you could be badly injured or killed. Never get under a vehicle when it is supported only by a jack.

⚠ Warning

Raising the vehicle with the jack improperly positioned can damage the vehicle and even make the vehicle fall. To help avoid personal injury and vehicle damage, be sure to fit the jack lift head into the proper location before raising the vehicle.

⚠ Warning

Lifting a vehicle and getting under it to do maintenance or repairs is dangerous without the appropriate safety equipment and training. If a jack is provided with the vehicle, it is designed only for changing a flat tire. If it is used for anything else, you or others could be badly injured or killed if the vehicle slips off the jack. If a jack is provided with the vehicle, only use it for changing a flat tire.

Caution

Using a jack to raise the vehicle without positioning it correctly could damage your vehicle. When raising your vehicle on a jack, be sure to position it correctly under the frame and avoid contact with the plastic molding.

5. Turn the wheel wrench clockwise to raise the vehicle. Raise the vehicle far enough off the ground so there is enough room for the spare tire to fit.

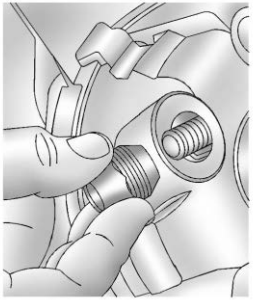

6. Remove all the wheel nuts.
7. Take the flat tire off of the mounting surface.

⚠ Warning

Rust or dirt on a wheel, or on the parts to which it is fastened, can cause wheel nuts to become loose over time. The wheel could come off and cause a crash. When changing a wheel, remove any rust or dirt from places where the wheel attaches to the vehicle. In an

(Continued)

Warning (Continued)

emergency, a cloth or paper towel can be used; however, use a scraper or wire brush later to remove all rust or dirt.

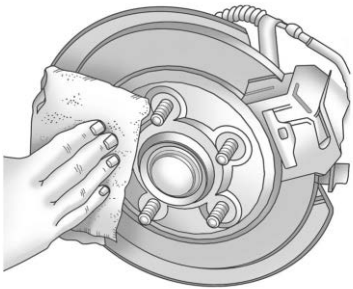

8. Remove any rust or dirt from the wheel bolts, mounting surfaces, and spare wheel.

⚠ Warning

Never use oil or grease on bolts or nuts because the nuts might come loose. The vehicle's wheel could fall off, causing a crash.

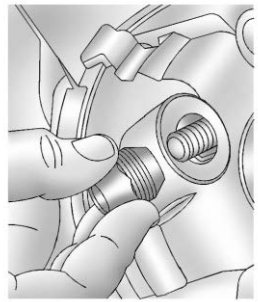

9. Put the wheel nuts back on with the rounded end of the nuts toward the wheel. Tighten each wheel nut by hand until the wheel is held against the hub.
10. Turn the jack handle counterclockwise to lower the vehicle. Lower the jack completely.

⚠ Warning

Wheel nuts that are improperly or incorrectly tightened can cause the wheels to become loose or come off. The wheel nuts should be tightened with a torque wrench

(Continued)

Warning (Continued)

to the proper torque specification after replacing. Follow the torque specification supplied by the aftermarket manufacturer when using accessory locking wheel nuts. See *Capacities and Specifications* ➪ *232* for original equipment wheel nut torque specifications.

Caution

Improperly tightened wheel nuts can lead to brake pulsation and rotor damage. To avoid expensive brake repairs, evenly tighten the wheel nuts in the proper sequence and to the proper torque specification. See *Capacities and Specifications* ➪ *232* for the wheel nut torque specification.

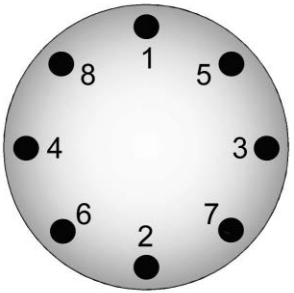

11. Use the wheel wrench to tighten the nuts firmly. Turn the wheel wrench clockwise and in a crisscross sequence, as shown.
12. Put the wheel cover or the center cap and plastic wheel nut caps back on. Remove any wheel blocks.

    Have a technician check the wheel nut tightness of all wheels with a torque wrench after the first 160 km (100 mi) and then 1 600 km (1,000 mi) after that. Repeat this service whenever a tire is removed or serviced. See *Capacities and Specifications* ⇨ *232* for more information.

Storing a Flat or Spare Tire and Tools

⚠ Warning

Storing a jack, a tire, or other equipment in the passenger compartment of the vehicle could cause injury. In a sudden stop or collision, loose equipment could strike someone. Store all these in the proper place.

⚠ Warning

Failure to follow these tire storage instructions carefully could result in personal injury or property damage if the hoist cable fails or if the tire comes loose. Make sure the tire is stored securely before driving.

Caution

The tire hoist can be damaged if there is no tension on the cable when using it. To have the necessary tension, the spare or road tire and wheel assembly must be installed on the tire hoist to use it.

⚠ Warning

An improperly stored spare tire could come loose and cause a crash. To avoid personal injury or property damage, always store the spare tire when the vehicle is parked on a level surface.

Store the tire under the rear of the vehicle in the spare tire carrier.

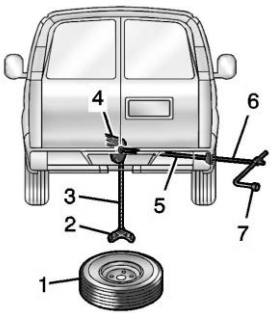

1. Spare Tire
2. Tire/Wheel Retainer
3. Hoist Cable
4. Hoist Assembly

5. Hoist Shaft
6. Hoist Handle and Extension(s)
7. Wheel Wrench

1. Put the tire on the ground at the rear of the vehicle with the valve stem pointed down, and to the rear.
2. Pull the cable and spring through the center of the wheel. Tilt the wheel retainer plate down and through the center wheel.

   Make sure the retainer is fully seated across the underside of the wheel.

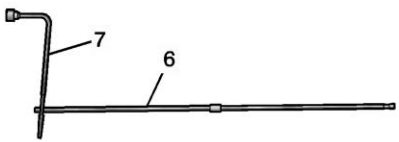

3. Assemble the wheel wrench (7) to the hoist handle and the extension(s) (6).
4. Open the passenger side rear door.

Caution

Use of an air wrench or other power tools with the hoist mechanism is not recommended and could damage the system. Use only the tools supplied with the hoist mechanism.

5. Insert the chisel end of the hoist handle, on an angle, through the hole in the rear floor panel above the bumper and onto the hoist shaft.

   Do not use the chiseled end of the wheel wrench.
6. Raise the tire part way upward. Make sure the retainer is seated in the wheel opening.
7. Raise the tire fully against the underside of the vehicle by turning the wheel wrench clockwise until you hear two clicks or feel it skip twice. You cannot overtighten the cable.

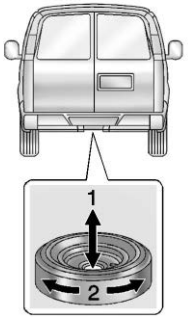

8. Make sure the tire is stored securely. Push, pull (1), and then try to turn (2) the tire. If the tire moves, use the wheel wrench to tighten the cable.

   Two clicks mean the tire is up all the way.

   Repeat this tightness check procedure when checking the spare tire pressure according to the scheduled maintenance information or any time the spare tire is handled due to service of other components.

Correctly Stored

Incorrectly Stored

9. Return the jacking equipment to the proper location. Secure the items and replace the jack cover.

Full-Size Spare Tire

If this vehicle came with a full-size spare tire, it was fully inflated when new, however, it can lose air over time. Check the inflation pressure regularly. See *Tire Pressure* ⇨ *192* and *Vehicle Load Limits* ⇨ *123* for information regarding proper tire inflation and loading the vehicle. For instructions on how to remove, install, or store a spare tire, see *Tire Changing* ⇨ *204*.

After installing the spare tire on the vehicle, stop as soon as possible and check that the spare is correctly inflated. The spare tire is made to perform well at speeds up to 112 km/h (70 mph) at the recommended inflation pressure, so you can finish your trip.

Have the damaged or flat road tire repaired or replaced and installed back onto the vehicle as soon as possible so the spare tire will be available in case it is needed again. Do not mix tires and wheels of different sizes, because they will not fit. Keep the spare tire and its wheel together.

If this vehicle has a spare tire that does not match the vehicle's original road tires and wheels, in size and type, do not include the spare in the tire rotation.

Jump Starting

Jump Starting - North America

For more information about the vehicle battery, see *Battery - North America* ⇨ *173*.

If the vehicle battery has run down, you may want to use another vehicle and some jumper cables to start your vehicle. Be sure to use the following steps to do it safely.

⚠ Warning

WARNING: Battery posts, terminals and related accessories can expose you to chemicals including lead and lead compounds, which are known to the State of California to cause cancer and birth defects or other reproductive harm. Wash hands after handling. For more information go to www.P65Warnings.ca.gov.

See *California Proposition 65 Warning* ⇨ *1*.

⚠ Warning

Batteries can hurt you. They can be dangerous because:

- They contain acid that can burn you.
- They contain gas that can explode or ignite.
- They contain enough electricity to burn you.

If you do not follow these steps exactly, some or all of these things can hurt you.

Caution

Ignoring these steps could result in costly damage to the vehicle that would not be covered by the vehicle warranty. Trying to start the vehicle by pushing or pulling it will not work, and it could damage the vehicle.

Caution

If the jumper cables are connected or removed in the wrong order, electrical shorting may occur and damage the vehicle. The repairs would not be covered by the vehicle warranty. Always connect and remove the jumper cables in the correct order, making sure that the cables do not touch each other or other metal.

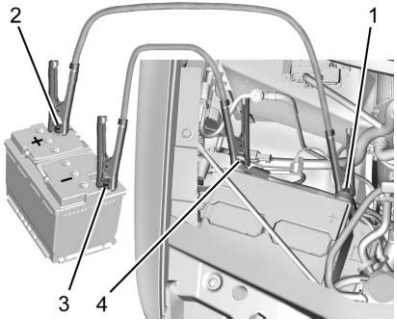

Connection Points and Sequence

1. Discharged Battery Positive (+) Terminal
2. Good Battery Positive (+) Terminal
3. Good Battery Negative (−) Terminal
4. Discharged Battery Negative (−) Terminal

Caution

If the other vehicle does not have a 12-volt system with a negative ground, both vehicles can be damaged. Only use a vehicle that has a 12-volt system with a negative ground for jump starting.

1. Check the other vehicle. It must have a 12-volt battery with a negative ground system.
2. Get the vehicles close enough so the jumper cables can reach, but make sure the vehicles are not touching each other. If they are, it could cause a ground connection you do not want. You would not be able to start the vehicle, and the bad grounding could damage the electrical systems.
3. To avoid the possibility of the vehicles rolling, set the parking brake firmly on both vehicles involved in the jump start procedure. Put the vehicles into P (Park). If the other vehicle has a manual transmission, put the vehicle into N (Neutral) before setting the parking brakes.

Caution

If any accessories are left on or plugged in during the jump starting procedure, they could be damaged. The repairs would not be covered by the vehicle warranty. Whenever possible, turn off or unplug all accessories on either vehicle when jump starting.

4. Turn off both vehicles. Unplug unnecessary accessories plugged into the cigarette lighter or the accessory power outlet. Turn off the radio and all lights that are not needed. This will avoid sparks and help save both batteries.
5. Open the hoods and locate the positive (+) and negative (−) terminal locations of the other vehicle.

   On your van, use the unpainted radio antenna bracket as a remote negative (−) terminal.

⚠ Warning

Using a match near a battery can cause battery gas to explode. People have been hurt doing this, and some have been blinded. Use a flashlight if you need more light.

Battery fluid contains acid that can burn you. Do not get it on you. If you accidentally get it in your eyes or on your skin, flush the place with water and get medical help immediately.

⚠ Warning

Fans or other moving engine parts can injure you badly. Keep your hands away from moving parts once the engine is running.

⚠ Warning

Always inspect jumper cables prior to use. Jumper cables with loose or missing insulation could shock you or cause vehicle damage. Do not use jumper cables that appear damaged.

6. Check that the jumper cables do not have loose or missing insulation.

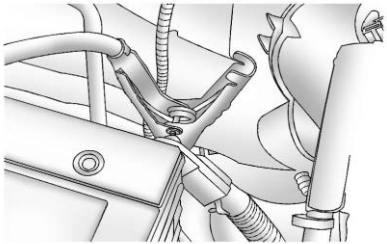

7. Connect the red positive (+) cable to the positive (+) terminal of the dead battery. Use a remote positive (+) terminal if the vehicle has one. Do not let the other end touch metal.
8. Connect the other end of the red positive cable (+) to the positive (+) terminal of the good battery. Use a remote positive (+) terminal if the vehicle has one.

   Do not let the other end touch metal.

9. Now connect the black negative (–) cable to the negative (–) terminal of the good battery. Use a remote negative (–) terminal if the vehicle has one.

   Do not let the other end touch anything until the next step. The other end of the negative (–) cable does not go to the dead battery. It goes to a heavy, unpainted metal engine part or to a remote negative (–) terminal on the vehicle with the dead battery.

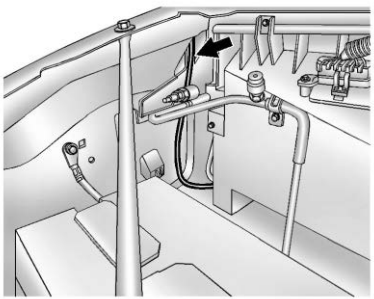

Caution

The vehicle uses the unpainted radio antenna bracket as a remote negative (-) terminal. Move the antenna coaxial cable out of the way before clamping the negative jumper cable to the fixed antenna bracket. Avoid touching the negative cable clamp to the air conditioning line. Failure to do either of these could damage the vehicle. The repairs would not be covered by the vehicle warranty.

10. Connect the other end of the negative (–) cable to the negative (–) terminal location on the vehicle with the dead battery. On your van, use the unpainted radio antenna bracket as a remote negative (–) terminal.
11. Now start the vehicle with the good battery and run the engine for a while.
12. Try to start the vehicle that had the dead battery. If it will not start after a few tries, it probably needs service.

Jumper Cable Removal

To remove the jumper cables, reverse Steps 7–10 in exact order.

After starting the disabled vehicle and removing the jumper cables, allow it to idle for several minutes.

Towing the Vehicle

Transporting a Disabled Vehicle

Caution

Incorrectly transporting a disabled vehicle may cause damage to the vehicle. Use proper tire straps to secure the vehicle to the flatbed tow truck. Do not strap or hook to any frame, underbody, or suspension component not specified below. Do not move vehicles with drive axle tires on the ground. Damage is not covered by the vehicle warranty.

Contact a professional towing service if the disabled vehicle must be transported. GM recommends a flatbed tow truck to transport a disabled vehicle. Use ramps to help reduce approach angles, if necessary.

The vehicle must be in N (Neutral) and the parking brake must be released when loading the vehicle onto a flatbed tow truck.

- If the 12-volt battery is dead and/or the parking brake is not released, the vehicle will not move. Try to jump start the vehicle with a known good 12-volt battery, shift the car into N (Neutral), and release the parking brake. See *Jump Starting - North America* ⇨ *212*.
- If unsuccessful, the vehicle will not move. Tire skates or dollies must be used under the non-rolling tires to prevent vehicle damage.

Front Attachment Points

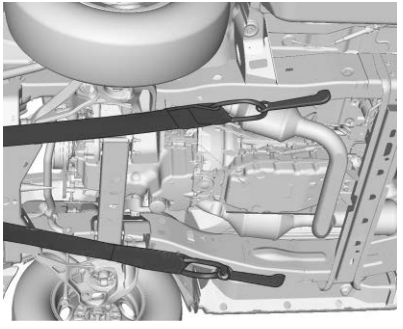

The vehicle is equipped with specific attachment points to be used by the towing provider. These holes may be used to pull the vehicle from a flat road surface onto the flatbed tow truck.

Recreational Vehicle Towing

Caution

Dolly towing or dinghy towing may damage the vehicle. Always put the vehicle on a flatbed truck or trailer.

This vehicle was neither designed nor intended to be towed with any of its wheels on the ground. If your vehicle is disabled and needs to be towed, see *Transporting a Disabled Vehicle* ⇨ *215*.

Appearance Care

Exterior Care

Locks

Locks are lubricated at the factory. Use a de-icing agent only when absolutely necessary, and have the locks greased after using the de-icing agent. See *Recommended Fluids and Lubricants* ⇨ *229*.

Washing the Vehicle

⚠ Warning

Do not power wash any part of the vehicle's interior, including the vinyl floor covering. This could damage safety and other systems in the vehicle, which would not be covered by the vehicle warranty.

Caution

Do not use petroleum-based, acidic, or abrasive cleaning agents as they can damage the vehicle's paint, metal,

(Continued)

Caution (Continued)

or plastic parts. If damage occurs, it would not be covered by the vehicle warranty. Approved cleaning products can be obtained from your dealer. Follow all manufacturer directions regarding correct product usage, necessary safety precautions, and appropriate disposal of any vehicle care product.

Caution

Avoid using high-pressure washers closer than 30 cm (12 in) to the surface of the vehicle. Use of power washers exceeding 8,274 kPa (1,200 psi) can result in damage or removal of paint and decals.

To preserve the exterior finish, wash it often and out of direct sunlight.

Take care to wash materials such as calcium chloride and other salts, ice melting agents, road oil and tar, tree sap, bird droppings, chemicals from industrial chimneys, etc. from the finish as soon as possible. These materials can damage the finish if they remain on painted surfaces.

Automatic Car Wash

Caution

Some automatic car washes can cause damage to the vehicle, wheels, and ground effects. Automatic car washes are not recommended, due to lack of clearance for the undercarriage and/or wide rear tires and wheels.

Follow the posted instructions at the automatic car wash carefully. Turn off the windshield wipers and rear window wiper, if equipped. Remove any accessories that can be damaged or interfere with the car wash equipment.

Hand Wash

Thoroughly rinse all cleaning agents before and after hand washing. Agents left to dry on the exterior may stain the finish.

Dry the finish with a soft, clean chamois or an all-cotton towel to avoid surface scratches and water spotting.

Cleaning Underhood Components

Caution

Do not power wash any component under the hood that has this symbol.

This could cause damage that would not be covered by the vehicle warranty.

Do not use solvents or aggressive cleaners that can harm underhood components. Instead, use water only.

Take care when using a pressure washer. The following criteria must be followed:

- Water pressure must be kept below 8,000 kPa (1,160 PSI).
- Water temperature must be below 80 °C (180 °F).
- Spray nozzle with a 40-degree wide angle spray pattern or wider must be used.
- Nozzle must be kept at least 30 cm (1 ft) away from all surfaces.

Finish Care

Caution

Do not apply waxes or polishes to uncoated plastic, vinyl, rubber, decals, simulated wood, flat paint, or metal mesh grilles as damage can occur.

Caution

Machine compounding or aggressive polishing on a basecoat/clearcoat paint finish may damage it. Use only non-abrasive waxes and polishes that are made for a basecoat/clearcoat paint finish on the vehicle.

Perform occasional hand waxing or mild polishing to remove residue from the paint finish. Do not use aftermarket clearcoat sealant/wax. See your dealer for approved cleaning products.

Avoid rubbing the finish vigorously. This can create bright spots and an uneven appearance on the finish.

To keep paint finish looking new, keep the vehicle garaged or covered whenever possible.

Protecting Exterior Bright Metal Moldings

Caution

Failure to clean and protect the bright metal moldings can result in a hazy white finish or pitting. This damage would not be covered by the vehicle warranty.

The bright metal moldings on the vehicle are aluminum, chrome, or stainless steel. To prevent damage always follow these cleaning instructions:

- Be sure the molding is cool to the touch before applying any cleaning solution.
- Use only approved cleaning solutions for aluminum, chrome, or stainless steel. Some cleaners are highly acidic or contain alkaline substances and can damage the moldings.
- Always dilute a concentrated cleaner according to the manufacturer’s instructions.
- Do not use cleaners that are not intended for automotive use.
- Use a nonabrasive wax on the vehicle after washing to protect and extend the molding finish.

Cleaning Exterior Lights/Lenses, Emblems, Decals, and Stripes

Caution

Failure to clean lights properly can cause damage to the light cover that would not be covered by the vehicle warranty.

Caution

Using wax on low gloss black finish stripes can increase the gloss level and create a non-uniform finish. Clean low gloss stripes with soap and water only.

Use only lukewarm or cold water, a soft cloth, and a car washing soap to clean exterior lights, lenses, emblems, decals, and stripes. Follow the instructions under "Washing the Vehicle" previously in this section.

Light covers are made of plastic, and some have a UV protective coating. Do not clean or wipe them while they are dry. This can cause scratches to the surface of the light cover.

Do not use any of the following on light covers:

- Abrasive or caustic agents.
- Washer fluids and other cleaning agents in higher concentrations than suggested by the manufacturer.
- Solvents, alcohols, fuels, or other harsh cleaners.
- Ice scrapers or other hard items.
- Aftermarket appearance caps or covers while the lights are illuminated.

Air Intakes

Clear debris from the air intakes, between the hood and windshield when washing the vehicle.

Windshield and Wiper Blades

Clean the outside of the windshield with glass cleaner.

Clean rubber blades using a lint-free cloth or paper towel soaked with windshield washer fluid or a mild detergent. Wash the windshield thoroughly when cleaning the blades. Bugs, road grime, sap, and a buildup of vehicle wash/wax treatments may cause wiper streaking.

Extreme dusty conditions, sand, salt, heat, sun, snow, and ice can cause damage. Replace the wiper blades if they are worn or damaged.

Weatherstrips

Apply weatherstrip lubricant once a year to help weatherstrips last longer, seal better, and not stick or squeak. Hot, dry climates may require more frequent application.

Use a clean cloth to remove any black marks caused by weatherstrips.

Tires, Wheels, and Wheel Trim

Caution

Using petroleum-based tire dressing products on the vehicle may damage the paint finish and/or tires. When applying a tire dressing, always wipe off any overspray from all painted surfaces on the vehicle.

Use a stiff brush with tire cleaner to clean the tires.

Caution

To avoid surface damage on wheels and wheel trim, do not use strong soaps, chemicals, abrasive polishes, cleaners, or brushes. Use only GM approved cleaners. Do not drive the vehicle through an automatic car wash that uses silicon carbide tire/wheel cleaning brushes. Damage could occur and the repairs would not be covered by the vehicle warranty.

Use a soft, clean cloth with mild soap and water to clean the wheels. After rinsing thoroughly with clean water, dry with a soft, clean towel. A wax may then be applied.

Steering, Suspension, and Chassis Components

Visually inspect steering, suspension, and chassis components for damaged, loose, or missing parts or signs of wear at least once a year.

Inspect power steering for proper attachment, connections, binding, leaks, cracks, chafing, etc.

Visually check constant velocity joint boots and axle seals for leaks.

Caution
Lubrication of applicable steering/ suspension points should not be done unless the temperature is −12 °C (10 °F) or higher, or damage could result.

Lubricate the upper and lower control arm ball joints at every engine oil change.

Lubricate the tie rod ball joints, idler arm pivot shaft bearings, idler arm socket, and pitman arm socket, at every engine oil change.

Underbody Maintenance

Every six months, flush any corrosive materials from the underbody with plain water. Take care to thoroughly clean any areas where mud and other debris can collect. If equipped, extend power assist steps and use a high pressure wash to clean all joints and gaps.

Do not directly power wash the transfer case and/or front/rear axle output seals. High pressure water can overcome the seals and contaminate the fluid. Contaminated fluid will decrease the life of the transfer case and/or axles and should be replaced.

Sheet Metal Damage

If the vehicle is damaged and requires sheet metal repair or replacement, use original manufacturer replacement parts which provide corrosion protection and maintain the vehicle warranty.

If original manufacturer replacement parts are not used, make sure the body repair shop applies anti-corrosion material to parts repaired or replaced.

Finish Damage

Quickly repair minor chips and scratches with touch-up materials available from your dealer to avoid corrosion. See your dealer's body and paint shop to correct larger areas of finish damage.

Chemical Paint Spotting

Airborne pollutants can damage painted vehicle surfaces and cause ring-shaped discolorations and small, irregular dark spots. See “Finish Care” previously in this section for cleaning instructions.

Interior Care

Caution
To prevent damage: • Never use a razor or any other sharp object to remove soil from any interior surface. • Never use a brush with stiff bristles. • Never rub any surface aggressively or with too much pressure. • Do not get any exposed electrical components wet. • Do not use laundry detergents or dishwashing soaps with degreasers. Do not use solutions that contain strong or caustic soap. (Continued)

Caution (Continued)

- Do not heavily saturate the upholstery when cleaning.
- Do not use solvents or cleaners containing solvents.
- Do not use disinfecting wipes that are scented or contain bleach. Do not use wipes or cleaners that show a color transfer to the wipe or change the appearance of the interior surface when used.
- Do not use scented or gel-type hand sanitizers. If hand sanitizer comes in contact with interior surfaces of the vehicle, blot immediately and clean with a soft cloth dampened with a mild soap and water solution.

Caution

Immediately remove cleaners, hand lotions, sunscreen, and insect repellent from all interior surfaces or permanent damage may result.

Caution

Use cleaners specifically designed for the surfaces being cleaned to prevent permanent damage to the vehicle. Apply all cleaners directly to a cleaning cloth. Do not spray cleaners on any switches or controls.

To prevent dirt particle abrasions to the vehicle's interior, regularly clean it. Before using cleaners, read and follow all safety instructions on the label. While cleaning the interior, open the doors and windows for proper ventilation. Newspapers or dark garments can transfer color to the vehicle's interior.

When using liquid soap cleaners, follow the directions on the specific cleaner or soap solution for dilution instructions.

Interior Glass

Caution

To prevent scratching, never use abrasive cleaners on automotive glass. Abrasive cleaners or aggressive cleaning may damage the rear window defogger.

Use a microfiber cloth fabric dampened with water to clean interior glass. Wipe droplets left behind with a clean dry cloth. If necessary, use a commercial glass cleaner after cleaning with plain water.

Cleaning the interior windshield with water during the first three to six months of ownership will reduce tendency to fog.

Speaker Covers

Vacuum gently around speaker covers to prevent damage. Clean spots with water and mild soap.

Coated Moldings

When cleaning coated moldings:

- When lightly soiled, wipe with a sponge or soft, lint-free cloth dampened with water.
- When heavily soiled, use warm soapy water.

Vinyl/Rubber Floor and Mats

⚠ Warning

Do not use cleaners that contain silicone, wax-based products, or cleaners that increase gloss on vinyl/rubber floor and mats. These cleaners can permanently change the appearance and feel of the vinyl/rubber and can make the floor slippery. Your foot could slip while operating the vehicle, and you could lose control, resulting in a crash. You or others could be injured.

If equipped with vinyl/rubber floor and mats, use a soft cloth and/or brush dampened with water to remove dust and loose dirt. For more thorough cleaning, use a mild soap and water solution.

Fabric/Carpet/Suede

Before cleaning, remove as much solid soils as possible, then gently vacuum the surface using a soft brush attachment. If a rotating vacuum brush attachment is used, only use it on the floor carpet.

Gently blot liquids with a paper towel. Continue blotting until no more soil can be removed.

To clean:

1. Saturate a clean, lint-free colorfast cloth with water. Microfiber cloth is recommended to prevent lint transfer to the fabric or carpet.
2. Remove excess moisture by gently wringing until water does not drip from the cleaning cloth.
3. Start on the outside edge of the soil and gently rub toward the center. Fold the cleaning cloth to a clean area frequently to prevent forcing the soil into the fabric.
4. Continue gently rubbing the soiled area until there is no longer any color transfer from the soil to the cleaning cloth.
5. If the soil is not completely removed, use a mild soap solution followed only by plain water.
6. After cleaning, use a paper towel to blot excess moisture.

Stubborn stains may require a commercial upholstery cleaner or spot lifter. Test a small hidden area for colorfastness before using a commercial upholstery cleaner or spot lifter. If ring formation occurs, clean the entire fabric or carpet.

Cleaning High Gloss Surfaces, Vehicle Information, and Radio Displays

Caution

Do not attach a device with a suction cup to the display. This may cause damage and would not be covered by the vehicle warranty.

1. Use a soft bristle brush to remove any dirt from the high gloss surface/display.
2. Gently clean the surface/display with a clean microfiber cloth that has not been bleached or washed with fabric softener. Never use window cleaners or solvents.

Instrument Panel, Leather, Vinyl, Plastic Surfaces, Low Gloss Paint Surfaces, and Natural Open Pore Wood Surfaces

Caution

Soaking or saturating leather, especially perforated leather, as well as other interior surfaces, may cause permanent damage. Wipe excess moisture from these surfaces after cleaning and allow them to dry naturally. Never use heat, steam, or spot removers. Do not use liquids that contain alcohol or solvents on leather seats. Do not use cleaners that contain silicone or wax-based products. Cleaners containing these solvents can permanently change the appearance and feel of leather or soft trim and are not recommended.

Caution

Use of air fresheners may cause permanent damage to plastics and painted surfaces. If an air freshener comes in contact with any plastic or painted surface in the vehicle,

(Continued)

Caution (Continued)

blot immediately and clean with a soft cloth dampened with a mild soap solution. Damage caused by air fresheners would not be covered by the vehicle warranty.

Use compressed air or a vacuum to remove liquid or dust under the Multi-Functional Controller (MFC) cap, if equipped.

To remove dust and dirt from knobs and crevices on the instrument cluster:

1. Use a soft bristle brush.
2. Wipe with a soft microfiber cloth dampened with water. Use a mild soap and water solution for more thorough cleaning.

Do not use cleaners that increase gloss, especially on the instrument panel. Reflected glare can decrease visibility through the windshield under certain conditions.

Cargo Cover and Convenience Net

If equipped, wash with warm water and mild detergent. Do not use chlorine bleach. Rinse with cold water, and then dry completely.

Care of Seat Belts

⚠ Warning

Do not bleach or dye seat belt webbing. It may severely weaken the webbing. In a crash, they might not be able to provide adequate protection. Clean and rinse seat belt webbing only with mild soap and lukewarm water. Allow the webbing to dry.

Keep belts clean and dry.

Floor Mats

⚠ Warning

If a floor mat is the wrong size or is not properly installed, it can interfere with the pedals. Interference with the pedals can cause unintended acceleration and/or increased stopping distance which can cause a crash and injury. Make sure the floor mat does not interfere with the pedals.

The original equipment floor mats are specially designed for your vehicle. If the floor mats need replacing, see “Removing and Replacing the Floor Mats” later in this section.

Proper Use:

- Use only GM-approved floor mats.
- Do not use a floor mat if the vehicle is not equipped with a floor mat retainer on the driver side floor.
- Use the floor mat with the correct side up. Do not turn it over.
- Do not place anything on top of the driver side floor mat.
- Use only a single floor mat on the driver side.

Cleaning Rubber Floor Mats (All-Weather Mats and Floor Liners)

See “Vinyl/Rubber” under *Interior Care* ⇨ *220* for important cleaning information.

Service and Maintenance

General Information
General Information 225
Maintenance Schedule
Maintenance Schedule 226
Multi-Point Vehicle Inspection (MPVI)
Multi-Point Vehicle Inspection (MPVI) 228
Special Application Services
Special Application Services 229
Recommended Fluids, Lubricants, and Parts
Recommended Fluids and Lubricants 229
Maintenance Records
Maintenance Records 231

General Information

Your vehicle is an important investment. This section describes the required maintenance for the vehicle. Follow this schedule to help protect against major repair expenses resulting from neglect or inadequate maintenance. It may also help to maintain the value of the vehicle if it is sold. It is the responsibility of the owner to have all required maintenance performed.

Your dealer has trained technicians who can perform required maintenance using genuine replacement parts. They have up-to-date tools and equipment for fast and accurate diagnostics. Many dealers have extended evening and Saturday hours, courtesy transportation, and online scheduling to assist with service needs.

Your dealer recognizes the importance of providing competitively priced maintenance and repair services. With trained technicians, the dealer is the place for routine maintenance such as oil changes and tire rotations and additional maintenance items like tires, brakes, batteries, and wiper blades.

Caution

Damage caused by improper maintenance can lead to costly repairs and may not be covered by the vehicle warranty. Maintenance intervals, checks, inspections, recommended fluids, and lubricants are important to keep the vehicle in good working condition.

Do not have chemical flushes that are not approved by GM performed on the vehicle. The use of flushes, solvents, cleaners, or lubricants that are not approved by GM could damage the vehicle, requiring expensive repairs that are not covered by the vehicle warranty.

The Tire Rotation and Required Services are the responsibility of the vehicle owner. It is recommended to have your dealer perform these services every 12 000 km/7,500 mi. Proper vehicle maintenance helps to keep the vehicle in good working condition, improves fuel economy, and reduces vehicle emissions.

Because of the way people use vehicles, maintenance needs vary. There may need to be more frequent checks and services. The Additional Required Services - Normal are for vehicles that:

- Carry passengers and cargo within recommended limits on the Tire and Loading Information label. See *Vehicle Load Limits* ➪ *123*.
- Are driven on reasonable road surfaces within legal driving limits.
- Use the recommended fuel. See *Recommended Fuel* ➪ *150*.

Refer to the information in the Maintenance Schedule Additional Required Services - Normal Service.

The Additional Required Services - Severe are for vehicles that are:

- Mainly driven in heavy city traffic in hot weather.
- Mainly driven in hilly or mountainous terrain.
- Frequently towing a trailer.
- Used for high speed or competitive driving.
- Used for taxi, police, or delivery service.

Refer to the information in the Maintenance Schedule Additional Required Services - Severe Service.

⚠ Warning

Performing maintenance work can be dangerous and can cause serious injury. Perform maintenance work only if the required information, proper tools, and equipment are available. If they are not, see your dealer to have a trained technician do the work. See *Doing Your Own Service Work* ➪ *155*.

Maintenance Schedule

Tire Rotation and Required Services Every 12 000 km (7,500 mi)

Tires are rotated to achieve a more uniform wear for all tires. The first rotation is the most important.

Anytime unusual wear is noticed, rotate the tires as soon as possible, check for proper tire inflation pressure, and check for damaged tires or wheels. If the unusual wear continues after the rotation, check the wheel alignment. See *When It Is Time for New Tires* ➪ *198* and *Wheel Replacement* ➪ *202*.

- Perform Multi-Point Vehicle Inspection. See *Multi-Point Vehicle Inspection (MPVI)* ➪ *228*.
- Lubricate body components. See *Exterior Care* ➪ *216*.

Extended Idle Use

When the vehicle is used in a way that requires extended idle time, one hour of use shall be deemed the same as 53 km (33 mi). See *Driver Information Center (DIC)* ➪ *82* for hourmeter.

Additional Required Services — Normal Service

Fleet Vehicles Without Engine Oil Life System

- Replace engine oil and filter every 5 000 km (3,000 mi).

Every 12 000 km (7,500 mi)

- Check engine oil level and oil life percentage. If needed, change engine oil and filter, and reset oil life system. Or when the CHANGE ENGINE OIL SOON message displays, have the engine oil and filter changed within the next 1 000 km/600 mi. If driven under the best conditions, the engine oil life system may not indicate the need for vehicle service for up to a year. The engine oil and filter must be changed at least once a year and the oil life system must be reset. Your trained dealer technician can perform this work. If the engine oil life system is reset accidentally, service the vehicle within 5 000 km/3,000 mi since the last service. Reset the oil life system when the oil is changed. See *Engine Oil Life System* ⇨ *163*.

Every 72 000 km (45,000 mi)

- Replace the engine air filter. Or every 48 months, whichever occurs first. If driving in dusty conditions, inspect the filter at each oil change or more often as needed.

Every 156 000 km (97,500 mi)

- Replace spark plugs. Inspect spark plug wires and/or boots.

Every 240 000 km (150,000 mi)

- Drain and fill engine cooling system. Or every six years, whichever comes first. See *Cooling System* ⇨ *165*.

Severe Conditions Requiring More Frequent Maintenance*

- Public service, military, or commercial use vehicles to include the following:
  - Ambulances, police cars, and emergency rescue vehicles.
  - Civilian vehicles such as light duty pick-up trucks, SUVs, and passenger cars that are used in military applications.
  - Recovery vehicles such as tow trucks and flatbed single vehicle carriers or any vehicle that is consistently used in towing trailers or other loads.
  - High use commercial vehicles such as courier delivery vehicles, private security patrol vehicles, or any vehicles that operate on a 24–hour basis.
  - Any vehicle consistently operated in a high sand or dust environment such as those used on oil pipelines and similar applications.
- Vehicles that are regularly used for short trips of 6 km (4 mi) or less.

  The oil life indicator will show you when to change the oil and filter. Under severe conditions the indicator may come on before 12 000 km (7,500 mi).

  * Footnote: Under extreme driving conditions listed above, it may be necessary to replace your spark plugs at more frequent intervals. For further assistance in determining the most suitable service maintenance intervals for your vehicle, please contact your authorized GM Dealer.

  Extreme service is for vehicles mainly driven off-road in four-wheel drive or used in farming, mining, forestry, or snow plowing.

Additional Required Services — Severe Service

Every 72 000 km (45,000 mi)

- Change automatic transmission fluid and filter.

Owner Checks and Services

Every Five Years

- Replace brake fluid.

Every Seven Years

- Replace Air Conditioning Desiccant every seven years. The air conditioning system requires maintenance every seven years. This service requires replacement of the desiccant to help the longevity and efficient operation of the air conditioning system. This service can be complex. See your dealer.

Multi-Point Vehicle Inspection (MPVI)

A Multi Point Vehicle Inspection completed by a trained technician is a maintenance assessment of your vehicle. The benefit of the Multi Point Vehicle Inspection is to identify service items that require immediate attention and those that may require attention in the future.

The technician will perform the following checks on your vehicle. You can obtain a copy of the appropriate Multi Point Vehicle Inspection checklist on your country's GM Certified Service website. For a complete list of checks, inspections, and services, see your dealer.

Some items may not apply to your vehicle and/or region.

Diagnostics

- OnStar active, if equipped
- Service history/recall check

Engine Oil and Filter

- Engine oil
- Oil life monitor
  - Reset oil life monitor

Exterior Lights

- Visual inspection

Windshield and Wipers

- Visual inspection

12 Volt Battery

- Battery visual inspection
- Battery test results
- Battery cables and connections

Systems, Fluids, and Visible Leak Inspection

- Engine oil
- Transmission
- Drive axle
- Transfer case
- Engine cooling system
- Power steering, if equipped
- Fuel system
- Windshield washer fluid

Tire Inspection

- Tire pressure, tread depth, and wear
- Rotation, if applicable
- Alignment check, optional
- Reset tire pressure monitor
- Check tire sealant expiration date, if equipped

- Check spare tire, if equipped

Brakes

- Check brake system

Visible and Functional Inspections

- Seat belt components
- Exhaust system
- Accelerator pedal
- Passenger compartment air filter, if equipped
- Engine air filter
- Hoses
- Belts
- Shocks and struts
- Steering components
- Axle boots or driveshaft and u-joints
- Compartment lift struts, if equipped
- Floor mats secured, no interference with pedals
- Horn
- Ignition lock, if equipped
- Starter switch
- Evaporative control system

Lubricate

- Chassis components

Special Application Services

- Vehicles with Dual Wheels: Check dual wheel nut torque at 160, 1 600, and 10 000 km (100, 1,000, and 6,000 mi) of driving. Repeat this service whenever a tire/wheel is serviced or removed.
- Severe Commercial Use Vehicles Only: Lubricate chassis components every oil change.
- Have underbody flushing service performed. See “Underbody Maintenance” in *Exterior Care* ⇨ *216*.

Recommended Fluids, Lubricants, and Parts

Recommended Fluids and Lubricants

Fluids and lubricants identified below by name or specification, including fluids or lubricants not listed here, can be obtained from your dealer.

Usage	Fluid/Lubricant
Automatic Transmission	DEXRON-HP Automatic Transmission Fluid.
Chassis Lubrication, Parking Brake Cable Guides	Chassis lubricant meeting requirements of NLGI #2, Category LB or GC-LB.
Engine Coolant	50/50 mixture of clean, drinkable water and use only DEX-COOL Coolant. See *Cooling System* ⇨ *165*.
Engine Oil	Engine oil meeting the dexos1 specification of the proper SAE viscosity grade. ACDelco dexos1 full synthetic is recommended. See *Engine Oil* ⇨ *161*.
Hydraulic Brake System	DOT 4 Hydraulic Brake Fluid.
Key Lock Cylinders, Hood Hinges	Multi-Purpose Lubricant, Superlube. See your dealer.
Power Steering System	GM Power Steering Fluid. See your dealer.
Rear Axle	See your dealer.
Windshield Washer	Automotive windshield washer fluid that meets regional freeze protection requirements.

Maintenance Records

After scheduled services are performed, record the date, odometer reading, who performed the service, and the type of services performed in the boxes provided. Retain all maintenance receipts.

Date	Odometer Reading	Serviced By	Services Performed

Technical Data

Vehicle Identification
Vehicle Identification Number (VIN) 232
Service Parts Identification 232
Vehicle Data
Capacities and Specifications 232
Engine Drive Belt Routing 235

Vehicle Identification

Vehicle Identification Number (VIN)

This legal identifier is in the front corner of the instrument panel, on the driver side of the vehicle. It can be seen through the windshield from outside. The Vehicle Identification Number (VIN) also appears on the Vehicle Certification label and certificates of title and registration.

Engine Identification

The eighth character in the Vehicle Identification Number (VIN) is the engine code. This code identifies the vehicle engine, specifications, and replacement parts. See "Engine Specifications" under *Capacities and Specifications* ⇨ *232* for the vehicle engine code.

Service Parts Identification

The certification label is intended to provide the service technician with vehicle service information.

There may be a large barcode on the certification label on the rear edge of the driver side front door that the service technician can scan for the following information:

- Vehicle Identification Number (VIN)
- Model designation
- Paint information
- Production options

If there is not a large barcode on this label, then you will find this same information on the rear edge of the passenger side front door.

Vehicle Data

Capacities and Specifications

The following approximate capacities are given in metric and English conversions. See *Recommended Fluids and Lubricants* ⇨ *229* for more information.

Application	Capacities	
	Metric	English
Air Conditioning Refrigerant R134a	For the air conditioning system refrigerant charge amount, see the refrigerant label located under the hood. See your dealer for more information.	
Engine Cooling System without Rear Heat*		
4.3L V6 Engine	10.1 L	10.7 qt
6.6L V8 Engine	11.9 L	12.6 qt
Engine Cooling System with Rear Heat*		
4.3L V6 Engine	12.4 L	13.1 qt
6.6L V8 Engine	14.2 L	15.0 qt
*Engine cooling system capacity values are based on the entire cooling system and its components.		
Engine Oil with Filter		
4.3L V6 Engine	5.7 L	6.0 qt
6.6L V8 Engine	7.6 L	8.0 qt
Fuel Tank		

Application	Capacities	
	Metric	English
Cutaway (Optional Tank)*	215.7 L	57.0 gal
Cutaway (Standard Tank)	121.1 L	32.0 gal
Passenger and Cargo	117.3 L	31.0 gal
* 4 039 mm (159 in) wheelbase or 4 496 mm (177 in) wheelbase only		
Wheel Nut Torque	190 N•m	140 lb ft
All capacities are approximate. When adding, be sure to fill to the approximate level, as recommended in this manual. Recheck fluid level after filling.		

Engine Specifications

Engine	VIN Code	Transmission	Spark Plug Gap
4.3L V6 (LV1)	P	Automatic	0.95–1.10 mm (0.037–0.043 in)
6.6L V8 (L8T)	7	Automatic	0.95–1.10 mm (0.037–0.043 in)
Spark plug gaps are preset by the manufacturer. Re-gapping the spark plug is not recommended and can damage the spark plug.			

Engine Drive Belt Routing

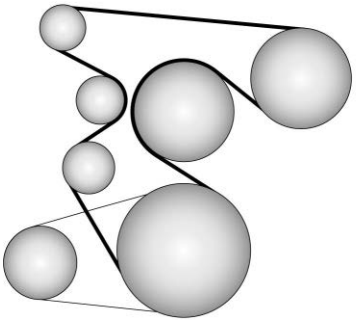

4.3L V6 Engine (LV1)

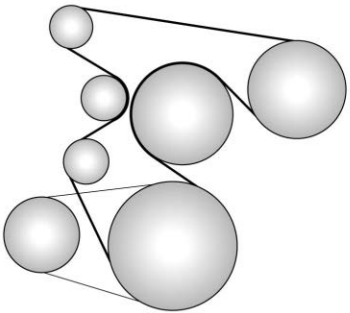

6.6L V8 Engine (L8T)

Customer Information

Customer Information
Customer Satisfaction Procedure 236
California Warranty Information 238
Customer Assistance Offices 240
Customer Assistance for Text Telephone (TTY) Users 240
Online Account and Customer Support .. 240
GM Mobility Reimbursement Program (U.S. Only) 241
Roadside Assistance Program 241
Scheduling Service Appointments 243
Courtesy Transportation Program 243
Collision Damage Repair 244
Publication Ordering Information 245
Radio Frequency Statement 246

Reporting Safety Defects
Reporting Safety Defects to the United States Government 246
Reporting Safety Defects to the Canadian Government 247
Reporting Safety Defects to General Motors 247

Vehicle Data Recording and Privacy
Vehicle Data Recording and Privacy 247
Cybersecurity 247
Event Data Recorders 248
OnStar 248

Customer Satisfaction Procedure

Your satisfaction and goodwill are important to your dealer and to Chevrolet. Normally, any concerns with the sales transaction or the operation of the vehicle will be resolved by your dealer's sales or service departments. Sometimes, however, despite the best intentions of all concerned, misunderstandings can occur. If your concern has not been resolved to your satisfaction, the following steps should be taken:

STEP ONE: Discuss your concern with a member of dealership management. Normally, concerns can be quickly resolved at that level. If the matter has already been reviewed with the sales, service, or parts manager, contact the owner of your dealership or the general manager.

STEP TWO: If after contacting a member of dealership management, it appears your concern cannot be resolved by your dealership without further help, in the U.S., call the Chevrolet Customer Assistance Center at 1-800-222-1020. In Canada, call General Motors of Canada Customer Care Centre at 1-800-263-3777 (English), or 1-800-263-7854 (French).

We encourage you to call the toll-free number in order to give your inquiry prompt attention. Have the following information available to give the Customer Assistance representative:

- Vehicle Identification Number (VIN). This is available from the vehicle registration or title, or the plate at the top left of the instrument panel and visible through the windshield.
- Dealership name and location.
- Vehicle delivery date and present mileage.

When contacting Chevrolet, remember that your concern will likely be resolved at a dealer's facility. That is why we suggest following Step One first.

STEP THREE — U.S. Owners: Both GM and your GM dealer are committed to making sure you are completely satisfied with your new vehicle. However, if you continue to remain unsatisfied after following the procedure outlined in Steps One and Two, you can file with the Better Business Bureau (BBB) AUTO LINE Program to enforce any additional rights you may have.

The BBB AUTO LINE Program is an out-of-court program administered by the BBB National Programs, Inc. to settle automotive disputes regarding vehicle repairs or the interpretation of the New Vehicle Limited Warranty. Although you may be required to resort to this informal dispute resolution program prior to filing a court action, use of the program is free of charge and your case will generally be heard within 40 days. If you do not agree with the decision given in your case, you may reject it and proceed with any other venue for relief available to you. When contacting the BBB AUTO LINE, you will need to provide the following information: Owner's name and address, Vehicle identification number (VIN), the Year, Make, Model, mileage of the vehicle and provide a description of the concern.

Contact the BBB AUTO LINE Program using the toll-free telephone number or write them at the following address:

BBB AUTO LINE Program
BBB National Programs, Inc.
1676 International Drive
Suite 550
McLean, VA 22102

Telephone: 1-800-955-5100
www.bbbautoline.org

This program is available in all 50 states and the District of Columbia. Eligibility is limited by vehicle age, mileage, and other factors. General Motors reserves the right to change eligibility limitations and/or discontinue its participation in this program.

STEP THREE — Canadian Owners: In the event that you do not feel your concerns have been addressed after following the procedure outlined in Steps One and Two, General Motors of Canada Company wants you to be aware of its participation in a no-charge Mediation/Arbitration Program. General Motors of Canada Company has committed to binding arbitration of owner disputes involving factory-related vehicle service claims. The program provides for the review of the facts involved by an impartial third party arbiter, and may include an informal hearing before the arbiter. The program is designed so that the entire dispute settlement process, from the time you file your complaint to the final decision, should be completed in about 70 days. We believe our impartial program offers advantages over courts in most jurisdictions because it is informal, quick, and free of charge.

For further information concerning eligibility in the Canadian Motor Vehicle Arbitration Plan (CAMVAP), call toll-free 1-800-207-0685, or call

the General Motors Customer Care Centre, 1-800-263-3777 (English), 1-800-263-7854 (French), or write to:

The Mediation/Arbitration Program
c/o Customer Care Centre
General Motors of Canada Company
500 Wentworth Street W
Oshawa, ON L1J 0C5

Your inquiry should be accompanied by the Vehicle Identification Number (VIN).

California Warranty Information

The Song-Beverly Consumer Warranty Act provides consumers who purchase or lease a new motor vehicle in California with certain rights if their vehicle has nonconformities that GM or its authorized repair facilities (e.g., GM dealers) are unable to repair after a reasonable number of attempts.

Applied to your vehicle, California Civil Code Section 1793.2(d) requires that, if GM or its authorized repair facilities are unable to repair a new motor vehicle to conform to the vehicle's applicable express warranties after a reasonable number of attempts, GM shall either replace the new motor vehicle or provide restitution in accordance with a statutory formula.

California Civil Code Section 1793.22(b) creates a presumption that GM has had a reasonable number of attempts to conform the vehicle to its applicable express warranties if, within 18 months from delivery to the buyer or 18,000 miles on the vehicle's odometer, whichever occurs first, one or more of the following occurs:

- The same nonconformity results in a condition that is likely to cause death or serious bodily injury if the vehicle is driven AND the nonconformity has been subject to repair two or more times by GM or its authorized repair facilities (e.g., dealers) AND the buyer or lessee has at least once directly notified GM of the need for the repair of the nonconformity by mailing such notification to the address listed below.
- The same nonconformity has been subject to repair four or more times by GM or its authorized repair facilities AND the buyer has at least once directly notified GM of the need for the repair of the nonconformity by mailing such notification to the address listed below.
- The vehicle is out of service by reason of repair nonconformities by GM or its authorized repair facilities for a cumulative total of more than 30 calendar days after delivery of the vehicle to the buyer.

If you purchased or leased a new motor vehicle in California and GM or its authorized repair facilities have been unable to repair the vehicle to conform it to applicable express warranties within a reasonable number of attempts, you may be eligible for relief under the Song-Beverly Consumer Warranty Act. You can submit a claim with the BBB AUTO LINE Program (see *Customer Satisfaction Procedure* ⇨ *236*) or you can request in writing that GM replace or repurchase your vehicle.

Notice to General Motors regarding warranty issues must be sent either by email to californiawarrantynotice@gm.com or by certified or registered mail, return receipt requested, to the following address:

California Repurchase Notice
P.O. Box 33173
Detroit, MI 48232-5173

Any repurchase request must include your name, the accurate Vehicle Identification Number ("VIN") of your vehicle, a brief summary of the repair history and problems with the vehicle.

Información de garantía de California

La Ley de Garantía del Consumidor Song-Beverly brinda a los consumidores que compran o alquilan un vehículo automotor nuevo en California ciertos derechos si su vehículo presenta inconformidades que GM o sus talleres de reparación autorizadas (por ejemplo, los distribuidores de GM) no pueden reparar después de una cantidad razonable de intentos.

Aplicado a su vehículo, la Sección 1793.2(d) del Código Civil de California requiere que, si GM o sus talleres de reparación autorizadas no pueden reparar un vehículo automotor nuevo para cumplir con las garantías expresas aplicables del vehículo después de una cantidad razonable de intentos, GM deberá reemplazar el vehículo automotor nuevo o proporcionar una restitución de acuerdo con una fórmula legal.

La Sección 1793.22(b) del Código Civil de California crea una presunción de que GM ha realizado un número razonable de intentos para adaptar el vehículo a sus garantías expresas aplicables si, dentro de los 18 meses desde la entrega al comprador o 18,000 millas en el odómetro del vehículo, lo que ocurra primero, ocurre uno o más de los siguientes:

- La misma inconformidad da como resultado una condición que probablemente cause la muerte o lesiones corporales graves si se conduce el vehículo Y la inconformidad ha sido objeto de reparación dos o más veces por GM o sus talleres de reparación autorizadas (por ejemplo, distribuidores) Y el comprador o arrendatario ha notificado directamente por lo menos una vez a GM sobre la necesidad de reparar la inconformidad enviando dicha notificación por correo a la dirección que se indica a continuación.
- La misma inconformidad ha sido objeto de reparación cuatro o más veces por GM o sus talleres de reparación autorizadas Y el comprador ha notificado directamente por lo menos una vez a GM sobre la necesidad de la reparación de la inconformidad enviando dicha notificación a la dirección que se indica a continuación.
- El vehículo está fuera de servicio debido a inconformidades de reparación por parte de GM o sus talleres de reparación autorizadas por un total acumulado de más de 30 días calendario después de la entrega del vehículo al comprador.

Si compró o alquiló un vehículo automotor nuevo en California y GM o sus talleres de reparación autorizados no han podido reparar el vehículo para cumplir con las garantías expresas aplicables dentro de una cantidad razonable de intentos, puede ser elegible para recibir ayuda bajo la Ley de Garantía del Consumidor Song-Beverly. Puede presentar un reclamo ante el Programa BBB AUTO LINE (consulte el Procedimiento de satisfacción del cliente) o puede solicitar por escrito que GM reemplace o recompre su vehículo.

El aviso a General Motors sobre problemas de garantía debe enviarse por correo electrónico a californiawarrantynotice@gm.com o por correo certificado o registrado, con acuse de recibo solicitado, a la siguiente dirección:

Aviso de recompra de California
P.O. Box 33173

Detroit, MI 48232-5173

La solicitud para reemplazo o recompra debe incluir su nombre, el Número de identificación del vehículo ("NIV") preciso de su vehículo, un breve resumen del historial de reparación y problemas con el vehículo.

Customer Assistance Offices

Chevrolet is committed to assisting customers. Visit us online at www.chevrolet.com/support (U.S.) or www.chevrolet.ca/en/owners (Canada) to chat with us or find answers to commonly asked questions, tips, vehicle how-to instructions, and available support.

Need more help? Use the telephone numbers or mailing addresses below for additional assistance.

United States and Puerto Rico

Chevrolet Motor Division
Chevrolet Customer Assistance Center
P.O. Box 33170
Detroit, MI 48232-5170

1-800-222-1020

TTY: Dial 711 relay service and contact 1-800-833-2438

Roadside Assistance: 1-800-243-8872

Canada

Customer Care Centre
General Motors of Canada Company
500 Wentworth Street W
Oshawa, ON L1J 0C5

1-800-263-3777 (English)

1-800-263-7854 (French)

1-800-263-3830 (For Text Telephone devices (TTYs))

Roadside Assistance: 1-800-268-6800

Overseas

Please contact the local General Motors Business Unit.

Customer Assistance for Text Telephone (TTY) Users

To assist customers who are deaf, hard of hearing, or speech-impaired and/or who use Text Telephones (TTYs), please dial the national 711 relay service and contact 1-800-833-2438. TTY users in Canada can dial 1-800-263-3830.

Online Account and Customer Support

Create a Chevrolet Account (U.S.) at chevrolet.com

Learn more about your vehicle features, shop for and manage your connected services and OnStar plans, and access diagnostic information specific to your vehicle. Visit chevrolet.com and create an account today.

Membership Benefits

: Download owner's manuals and view vehicle-specific how-to videos.

: View maintenance schedules, alerts, and Vehicle Diagnostic Information. Schedule service appointments.

: View service records from your dealership and add your own.

: Select a preferred dealer and view locations, maps, phone numbers, and hours.

: Track your vehicle warranty information.

: View active recalls by Vehicle Identification Number. See *Vehicle Identification Number (VIN)* ⇨ *232*.

: Manage your profile and payment information. View your GM Rewards Card earnings and My Chevrolet Rewards points.

: Chat with online help representatives.

Chevrolet Account (Canada)

Visit your Chevrolet Account at chevrolet.ca/en (English) or chevrolet.ca/fr (French) to access similar benefits.

GM Mobility Reimbursement Program (U.S. Only)

GENERAL MOTORS MOBILITY

This program is available to qualified applicants for cost reimbursement, up to certain limits, of eligible aftermarket adaptive equipment required for the vehicle, such as hand controls or a wheelchair/scooter lift for the vehicle.

To learn about the GM Mobility program, call the GM Mobility Assistance Center at 1-800-323-9935. Text Telephone (TTY) users, please dial the national 711 relay service and contact 1-800-323-9935.

Roadside Assistance Program

For U.S.-purchased vehicles, call 1-800-243-8872. Text Telephone (TTY) Users (U.S. Only): Contact 711 relay service and provide 1-800-243-8872.

For Canadian-purchased vehicles, call 1-800-268-6800.

Service is available 24 hours a day, 365 days a year.

Calling for Assistance

When calling Roadside Assistance, have the following information ready:

- Your name, home address, and home telephone number
- Telephone number of your location, if available
- Location of the vehicle
- Model, year, color, and license plate number of the vehicle
- Odometer reading and Vehicle Identification Number (VIN)
- Description of the problem

Coverage

Services are provided for the duration of the vehicle's Powertrain Warranty.

In the U.S., anyone driving the vehicle is covered. In Canada, a person driving the vehicle without permission from the owner is not covered.

Roadside Assistance is not a part of the New Vehicle Limited Warranty. General Motors North America and Chevrolet reserve the right to make any changes or discontinue the Roadside Assistance program at any time without notification.

General Motors North America and Chevrolet reserve the right to limit services or payment to an owner or driver if they decide the claims are made too often, or the same type of claim is made too frequently.

Services Provided

- **Emergency Fuel Delivery:** Delivery of enough fuel for the vehicle to get to the nearest service station.

- **Lock-Out Service:** Service to unlock the vehicle if you are locked out. A remote unlock may be available if you have OnStar. For security reasons, the driver must present identification before this service is given.
- **Emergency Tow from a Public Road or Highway:** Tow to the nearest Chevrolet dealer for warranty service, or if the vehicle was in a crash and cannot be driven.
- **Flat Tire Change:** Service to change a flat tire with the spare tire. The spare tire, if equipped, must be in good condition and properly inflated. It is the owner's responsibility for the repair or replacement of the tire if it is not covered by the warranty.
- **Battery Jump Start:** Service to jump start a dead battery.
- **Trip Interruption Benefits and Assistance:** If your trip is interrupted due to a warranty event, incidental expenses may be reimbursed within the Powertrain Warranty period. Items considered are reasonable and customary hotel, meals, rental car, or a vehicle being delivered back to the customer, up to 500 miles.

Services Not Included in Roadside Assistance

- Impound towing caused by violation of any laws
- Reimbursement of legal fines
- Reimbursement of police mandated tows
- Mounting, dismounting, or changing of snow tires, chains, or other traction devices
- Towing of anything attached to the vehicle like boats, campers, trailers, cargo boxes, etc.
- Vehicles stranded due to off-road driving

Service is not provided if a vehicle is in an area that is not accessible to the service vehicle or is not a regularly traveled or maintained public road, which includes ice and winter roads. Service is not provided on restricted roadways which can include and is not limited to, some highways, tunnels, toll roads, toll bridges, turnpikes, and service roads. Assistance is not given when the vehicle is stuck in the sand, mud, or snow.

Services Specific to Canadian-Purchased Vehicles

- **Fuel Delivery:** Reimbursement is up to 7 liters. Propane and other fuels are not provided through this service.
- **Lock-Out Service:** Vehicle registration is required.
- **Trip Interruption Benefits and Assistance:** Must be traveling and over 150 km from where your trip was started to qualify. Pre-authorization, original detailed receipts, and a copy of the repair orders are required. Once authorization has been received, the Roadside Assistance advisor will help to make arrangements and explain how to receive payment.
- **Alternative Service:** If assistance cannot be provided right away, the Roadside Assistance advisor may give permission to get local emergency road service. You will receive payment, up to $100, after sending the original receipt to Roadside Assistance. Mechanical failures may be covered, however any cost for parts and labor for repairs not covered by the warranty are the owner’s responsibility.

Scheduling Service Appointments

If your vehicle requires service, contact your dealer and request an appointment. By scheduling a service appointment and advising the service consultant of your transportation needs, your dealer can help minimize your inconvenience. Be sure to notify your dealer of any safety-related concerns when requesting the appointment.

If you cannot schedule service immediately, keep driving the vehicle until your scheduled appointment, unless the problem is safety related.

If you are seeking a same-day repair, schedule your appointment as early in the day as possible.

Courtesy Transportation Program

To enhance your ownership experience, we and our participating dealers are proud to offer Courtesy Transportation, a customer support program for vehicles with the Bumper-to-Bumper (Base Warranty Coverage period in Canada), Federal Emission, Extended Powertrain, and/or Electric-specific warranties in both the U.S. and Canada.

The Courtesy Transportation program is no longer available for cutaway vehicles.

Several Courtesy Transportation options are available to assist in reducing inconvenience when warranty repairs are required.

Courtesy Transportation is not a part of the New Vehicle Limited Warranty. See the "Limited Warranty and Owner Assistance Information" manual for detailed new vehicle warranty coverage information.

Transportation Options

Warranty service can generally be completed while you wait. However, if you are unable to do so, your dealer may offer the following transportation options:

Shuttle Service

This includes one-way or round-trip shuttle service within reasonable time and distance parameters of your dealer's area.

Public Transportation, Ridesharing App or Fuel Reimbursement

If overnight warranty repairs are needed, and public transportation, or a ridesharing app is used, the expense must be supported by original receipts and within the maximum amount allowed by GM. If U.S. customers arrange their own transportation, limited reimbursement for reasonable fuel expenses may be available. Claim amounts should reflect actual costs and be supported by original receipts. See your dealer for information.

Courtesy Rental Vehicle

For an overnight warranty repair, the dealer may provide an available courtesy rental vehicle or provide for reimbursement of a rental vehicle. Reimbursement is limited and must be supported by original receipts as well as a signed and completed rental agreement and meet state/provincial, local, and rental vehicle provider requirements. Requirements vary and may include minimum age requirements, insurance coverage, credit card, etc. Additional fees such as fuel, rental vehicle insurance, taxes, levies, usage fees, excessive mileage, or rental usage beyond the completion of the repair are also your responsibility.

It may not be possible to provide a like vehicle as a courtesy rental.

Additional Program Information

All program options, such as shuttle service, may not be available at every dealer. Contact your dealer for specific availability.

General Motors reserves the right to unilaterally modify, change, or discontinue Courtesy Transportation at any time and to resolve all questions of claim eligibility pursuant to the terms and conditions described herein at its sole discretion.

Collision Damage Repair

If the vehicle is involved in a collision and it is damaged, have the damage repaired by a qualified technician using the proper equipment and quality replacement parts. Poorly performed collision repairs diminish the vehicle resale value, and safety performance can be compromised in subsequent collisions.

Collision Parts

Genuine GM Collision parts are new parts made with the same materials and construction methods as the parts with which the vehicle was originally built. Genuine GM Collision parts are the best choice to ensure that the vehicle's designed appearance, durability, and safety are preserved. The use of Genuine GM parts can help maintain the GM New Vehicle Limited Warranty.

Recycled original equipment parts may also be used for repair. These parts are typically removed from vehicles that were total losses in prior crashes. In most cases, the parts being recycled are from undamaged sections of the vehicle. A recycled original equipment GM part may be an acceptable choice to maintain the vehicle's originally designed appearance and safety performance; however, the history of these parts is not known. Such parts are not covered by the GM New Vehicle Limited Warranty, and any related failures are not covered by that warranty.

Aftermarket collision parts are also available. These are made by companies other than GM and may not have been tested for the vehicle. As a result, these parts may fit poorly, exhibit premature durability/corrosion problems, and may not perform properly in subsequent collisions. Aftermarket parts are not covered by the GM New Vehicle Limited Warranty, and any vehicle failure related to such parts is not covered by that warranty.

Repair Facility

GM also recommends that you choose a collision repair facility that meets your needs before you ever need collision repairs. Your dealer may have a collision repair center with GM-trained technicians and state-of-the-art equipment, or be able to recommend a collision repair center that has GM-trained technicians and comparable equipment.

Insuring the Vehicle

Protect your investment in the GM vehicle with comprehensive and collision insurance coverage. There are significant differences in the quality of coverage afforded by various insurance policy terms. Many insurance policies provide reduced protection to the GM vehicle by limiting compensation for damage repairs through the use of aftermarket collision parts. Some insurance companies will not specify aftermarket collision parts. When purchasing insurance, we recommend that you ensure that the vehicle will be repaired with GM original equipment collision parts. If such insurance coverage is not available from your current insurance carrier, consider switching to another insurance carrier.

If the vehicle is leased, the leasing company may require you to have insurance that ensures repairs with Genuine GM Original Equipment Manufacturer (OEM) parts or Genuine Manufacturer replacement parts. Read the lease carefully, as you may be charged at the end of the lease for poor quality repairs.

If a Crash Occurs

If there has been an injury, call emergency services for help. Do not leave the scene of a crash until all matters have been taken care of. Move the vehicle only if its position puts you in danger, or you are instructed to move it by a police officer.

Give only the necessary information to police and other parties involved in the crash.

For emergency towing see *Roadside Assistance Program* ⇨ *241*.

Gather the following information:

- Driver name, address, and telephone number
- Driver license number
- Owner name, address, and telephone number
- Vehicle license plate number
- Vehicle make, model, and model year
- Vehicle Identification Number (VIN)
- Insurance company and policy number
- General description of the damage to the other vehicle

Choose a reputable repair facility that uses quality replacement parts. See “Collision Parts” earlier in this section.

If the airbag has inflated, see *What Will You See After an Airbag Inflates?* ⇨ *39*.

Managing the Vehicle Damage Repair Process

In the event that the vehicle requires damage repairs, GM recommends that you take an active role in its repair. If you have a pre-determined repair facility of choice, take the vehicle there, or have it towed there. Specify to the facility that any required replacement collision parts be original equipment parts, either new Genuine GM parts or recycled original GM parts. Remember, recycled parts will not be covered by the GM vehicle warranty.

Insurance pays the bill for the repair, but you must live with the repair. Depending on your policy limits, your insurance company may initially value the repair using aftermarket parts. Discuss this with the repair professional, and insist on Genuine GM parts. Remember, if the vehicle is leased, you may be obligated to have the vehicle repaired with Genuine GM parts, even if your insurance coverage does not pay the full cost.

If another party's insurance company is paying for the repairs, you are not obligated to accept a repair valuation based on that insurance company's collision policy repair limits, as you have no contractual limits with that company. In such cases, you can have control of the repair and parts choices as long as the cost stays within reasonable limits.

Publication Ordering Information

Service Manuals

Service manuals have the diagnosis and repair information on the engine/propulsion, transmission, axle, suspension, brakes, electrical system, steering system, body, etc.

Customer Literature

Owner's manuals are written specifically for owners and are intended to provide basic operational information about the vehicle. The owner's manual includes the Maintenance Schedule for all models.

Customer literature publications available for purchase include owner's manuals, warranty manuals, and portfolios. Portfolios include an owner's manual, warranty manual, if applicable, and zip lock bag or pouch.

Current and Past Models

Service manuals and customer literature are available for many GM vehicles.

To check availability and to order, call 1-800-551-4123 Monday–Friday, 8:00 a.m.–6:00 p.m. Eastern Time

For credit card orders only (VISA, MasterCard, or Discover), see Helm, Inc. at: www.helminc.com.

To order by mail, write to:

Helm, Incorporated
Attention: Customer Service
47911 Halyard Drive
Plymouth, MI 48170

Make checks payable in U.S. funds.

Radio Frequency Statement

This vehicle uses license-exempt transmitters / receivers / systems that operate on a radio frequency that complies with Part 15/Part 18 of the Federal Communications Commission (FCC) rules and with Innovation, Science and Economic Development (ISED) Canada's license-exempt RSS(s) / RSP-100 / ICES-GEN.

Operation is subject to the following two conditions:

1. The device may not cause harmful interference.
2. The device must accept any interference received, including interference that may cause undesired operation of the device.

Changes or modifications to any of these systems by other than an authorized service facility could void authorization to use this equipment.

Reporting Safety Defects

Reporting Safety Defects to the United States Government

If you believe that your vehicle has a defect which could cause a crash or could cause injury or death, you should immediately inform the National Highway Traffic Safety Administration (NHTSA) in addition to notifying General Motors.

If NHTSA receives similar complaints, it may open an investigation, and if it finds that a safety defect exists in a group of vehicles, it may order a recall and remedy campaign. However, NHTSA cannot become involved in individual problems between you, your dealer, or General Motors.

To contact NHTSA, you may call the Vehicle Safety Hotline toll-free at 1-888-327-4236 (TTY: 1-877-561-7439); go to *https://www.safercar.gov;* or write to:

Administrator, NHTSA
1200 New Jersey Avenue, S.E.,
Washington, D.C. , 20590

You can also obtain other information about motor vehicle safety from *https://www.safercar.gov*.

Reporting Safety Defects to the Canadian Government

If you live in Canada, and you believe that the vehicle has a safety defect, notify Transport Canada immediately, and notify General Motors of Canada Company. Call Transport Canada at 1-800-333-0510; go to:

www.tc.gc.ca/recalls (English)

www.tc.gc.ca/rappels (French)

or write to:

Transport Canada
Motor Vehicle Safety Directorate
Defect Investigations and Recalls Division
80 Noel Street
Gatineau , QC J8Z 0A1

Reporting Safety Defects to General Motors

In addition to notifying National Highway Traffic Safety Administration (NHTSA) (or Transport Canada) in a situation like this, notify General Motors.

In the U.S., call 1-800-222-1020, or write:

Chevrolet Motor Division
Chevrolet Customer Assistance Center
P.O. Box 33170
Detroit, MI 48232-5170

In Canada, call 1-800-263-3777 (English) or 1-800-263-7854 (French), or write:

Customer Care Centre
General Motors of Canada Company
500 Wentworth Street W
Oshawa, ON L1J 0C5

In Mexico, call 800-466-0811 or 800-508-0000.

In other Central America and Caribbean Countries, call 52-555-901-2369.

Vehicle Data Recording and Privacy

The vehicle has a number of computers that record information about the vehicle's performance and how it is driven or used. For example, the vehicle uses computer modules to monitor and control engine and transmission performance, to monitor the conditions for airbag deployment and deploy them in a crash, and, if equipped, to provide antilock braking to help the driver control the vehicle. These modules may store data to help the dealer technician service the vehicle or to help GM improve safety or features. Some modules may also store data about how the vehicle is operated, such as rate of fuel consumption or average speed. These modules may retain personal preferences, such as radio presets, seat positions, and temperature settings.

Cybersecurity

GM collects information about the use of your vehicle including operational and safety related information. We collect this information to provide, evaluate, improve, and troubleshoot our products and services and to develop new products and services.

The protection of vehicle electronics systems and customer data from unauthorized outside electronic access or control is important to GM. GM maintains appropriate security standards, practices, guidelines and controls aimed at defending the vehicle and the vehicle service ecosystem against unauthorized electronic access, detecting possible malicious activity in related networks, and responding to suspected cybersecurity incidents in a timely, coordinated and effective manner. Security incidents could impact your safety or compromise your private data. To minimize security risks, please do not connect your vehicle electronic systems to unauthorized devices or connect your vehicle to any unknown or untrusted networks (such as Bluetooth, Wi-Fi, or similar technology). In the event you suspect any security incident impacting your data or the safe operation of your vehicle, please stop operating your vehicle and contact your dealer.

Event Data Recorders

This vehicle is equipped with an Event Data Recorder (EDR). The main purpose of an EDR is to record, in certain crash or near crash-like situations, such as an air bag deployment or hitting a road obstacle, data that will assist in understanding how a vehicle's systems performed. The EDR is designed to record data related to vehicle dynamics and safety systems for a short period of time, typically 30 seconds or less. The EDR in this vehicle is designed to record such data as:

- How various systems in your vehicle were operating;
- Whether or not the driver and passenger safety belts were buckled/fastened;
- How far (if at all) the driver was depressing the accelerator and/or brake pedal; and,
- How fast the vehicle was traveling.

These data can help provide a better understanding of the circumstances in which crashes and injuries occur.

Note
EDR data are recorded by your vehicle only if a non-trivial crash situation occurs; no data are recorded by the EDR under normal driving conditions and no personal data (e.g., name, gender, age, and crash location) are recorded. However, other parties, such as law enforcement, could combine the EDR data with the type of personally identifying data routinely acquired during a crash investigation.

To read data recorded by an EDR, special equipment is required, and access to the vehicle or the EDR is needed. In addition to the vehicle manufacturer, other parties, such as law enforcement, that have the special equipment, can read the information if they have access to the vehicle or the EDR.

GM will not access these data or share it with others except: with the consent of the vehicle owner or, if the vehicle is leased, with the consent of the lessee; in response to an official request by police or similar government office; as part of GM's defense of litigation through the discovery process; or, as permitted by law. Data that GM collects or receives may also be used for GM research needs or may be made available to others for research purposes, where a need is shown and the data is not tied to a specific vehicle or vehicle owner.

OnStar

If the vehicle is equipped with OnStar and has an active service plan, additional data may be collected and transmitted through the OnStar system. This includes information about the

vehicle's operation; collisions involving the vehicle; the use of the vehicle and its features, including infotainment; and the location and approximate GPS speed of the vehicle. Refer to the OnStar Terms and Conditions and Privacy Statement on the OnStar website.

See *OnStar Additional Information* ⇨ *251*.

OnStar

OnStar Overview
OnStar Overview 250
OnStar Services
Emergency 251
Security 251
OnStar Additional Information
OnStar Additional Information 251

OnStar Overview

White OnStar Button

Blue OnStar Button

Red Emergency Button

This vehicle may be equipped with a comprehensive, in-vehicle system that can connect to an OnStar Advisor for Emergency, Security, Navigation, Connections, and Diagnostics Services. OnStar services may require a paid service plan and data plan. OnStar requires the vehicle battery and electrical system, cellular service, and GPS satellite signals to be available and operating. OnStar acts as a link to existing emergency service providers. OnStar may collect information about you and your vehicle, including location information. See OnStar User Terms, Privacy Statement, and Software Terms for more details including system limitations at www.onstar.com (U.S.) or www.onstar.ca (Canada).

The OnStar system status light is next to the OnStar buttons. If the status light is:

- Solid Green: System is ready.
- Flashing Green: On a call.
- Red: Indicates a problem.
- Off: System is off. Press twice to speak with an OnStar Advisor.

Press or call 1-888-4ONSTAR (1-888-466-7827) to speak to an Advisor.

Functionality of the White OnStar Button may vary by vehicle and region.

Press to answer and end incoming calls with a live OnStar Advisor.

Press to connect to an Advisor to:

- Verify account information or update contact information.
- Get driving directions.
- Receive a Diagnostic check of the vehicle's key operating systems.
- Receive Roadside Assistance.

- Manage Wi-Fi Settings, if equipped.

Press SOS to get a priority connection to an OnStar Advisor available 24/7 to:

- Get help for an emergency.
- Be a Good Samaritan or respond to an AMBER Alert.
- Get assistance in severe weather or other crisis situations and find evacuation routes.

OnStar Services

Emergency

Emergency Services require an active safety and security plan. With Automatic Crash Response, built-in sensors can automatically alert a specially trained OnStar Advisor who is immediately connected in to the vehicle to help.

Press SOS for a priority connection to an OnStar Advisor who can contact emergency service providers, direct them to your exact location, and relay important information.

With OnStar Crisis Assist, specially trained Advisors are available 24 hours a day, 7 days a week, to provide a central point of contact, assistance, and information during a crisis.

With Roadside Assistance, Advisors can locate a nearby service provider to help with a flat tire, a battery jump, or an empty gas tank.

Security

If equipped, OnStar provides these services:

- With Stolen Vehicle Assistance, OnStar Advisors can use GPS to pinpoint the vehicle and help authorities quickly recover it.
- With Remote Ignition Block, if equipped, OnStar can block the vehicle from being restarted.
- With Stolen Vehicle Slowdown, if equipped, OnStar can work with law enforcement to gradually slow the vehicle down.

Theft Alarm Notification

When the vehicle alarm system is armed and the alarm is activated, a notification by text, email, or app push will be sent. If the vehicle is stolen, an OnStar Advisor can work with authorities to recover the vehicle.

OnStar Additional Information

In-Vehicle Audio Messages

Audio messages may play important information at the following times:

- Prior to vehicle purchase. Press On to set up an account.
- After change in ownership and at 90 days.

Transferring Service

Press On to request account transfer eligibility information. The Advisor can cancel or change account information.

Selling/Transferring the Vehicle

Call 1-888-4ONSTAR (1-888-466-7827) immediately to terminate your OnStar or connected services if the vehicle is disposed of, sold, transferred, or if the lease ends.

Reactivation for Subsequent Owners

Press On and follow the prompts to speak to an Advisor as soon as possible. The Advisor will update vehicle records and explain OnStar or connected service options.

How OnStar Service Works

Automatic Crash Response, Emergency Services, Crisis Assist, Stolen Vehicle Assistance, Remote Services, and Roadside Assistance are available on most vehicles. Not all OnStar services are available everywhere or on all vehicles. For more information, a full description of OnStar services, system limitations, and OnStar User Terms, Privacy Statement, and Software Terms:

- Call 1-888-4ONSTAR (1-888-466-7827).
- See www.onstar.com (U.S.).
- See www.onstar.ca (Canada).
- Call TTY 1-877-248-2080.
- Press OnStar to speak with an Advisor.

OnStar or connected services cannot work unless the vehicle is in a place where OnStar has an agreement with a wireless service provider for service in that area. The wireless service provider must also have coverage, network capacity, reception, and technology compatible with OnStar or connected services. Service involving location information about the vehicle cannot work unless GPS signals are available, unobstructed, and compatible with the OnStar hardware. OnStar or connected services may not work if the OnStar equipment is not properly installed or it has not been properly maintained. If equipment or software is added, connected, or modified, OnStar or connected services may not work. Other problems beyond the control of OnStar — such as hills, tall buildings, tunnels, weather, electrical system design and architecture of the vehicle, damage to the vehicle in a crash, or wireless phone network congestion or jamming — may prevent service.

See *Radio Frequency Statement* ⇨ *246*.

Services for People with Disabilities

Advisors provide services to help with physical disabilities and medical conditions.

Press OnStar to help:

- Locate a gas station with an attendant to pump gas.
- Find a hotel, restaurant, etc., that meets accessibility needs.
- Provide directions to the closest hospital or pharmacy in urgent situations.

TTY Users

OnStar has the ability to communicate to deaf, hard-of-hearing, or speech-impaired customers while in the vehicle. The available TTY system can provide in-vehicle access to all OnStar services, except Virtual Advisor and OnStar Turn-by-Turn Navigation.

If equipped, TTY mode can be turned on or off by touching Settings, then Apps, and then Phone. When TTY mode is on, phone calls can be made or received with OnStar using the infotainment display.

OnStar Personal Identification Number (PIN)

A PIN is needed to access some OnStar services. The PIN will need to be changed the first time when speaking with an Advisor. To change the OnStar PIN, contact an OnStar Advisor by pressing OnStar or calling 1-888-4ONSTAR.

Warranty

OnStar equipment may be warranted as part of the vehicle warranty.

Languages

The vehicle can be programmed to respond in multiple languages. Press On and ask for an Advisor. Advisors are available in English, Spanish, and French. Available languages may vary by country.

Potential Issues

OnStar cannot perform Remote Door Unlock or Stolen Vehicle Assistance after the vehicle has been off continuously for an extended period of time without an ignition cycle. To find out the duration of time that applies for the vehicle, contact an OnStar Advisor by pressing On or calling 1-888-4ONSTAR. If the vehicle has not been started for an extended period of time, OnStar can contact Roadside Assistance or a locksmith to help gain access to the vehicle.

Global Positioning System (GPS)

- Obstruction of the GPS can occur in a large city with tall buildings; in parking garages; around airports; in tunnels and underpasses; or in an area with very dense trees. If GPS signals are not available, the OnStar system should still operate to call OnStar. However, OnStar could have difficulty identifying the exact location.
- In emergency situations, OnStar can use the last stored GPS location to send to emergency responders.

A temporary loss of GPS can cause loss of the ability to send a Turn-by-Turn Navigation route. The Advisor may give a verbal route or may ask for a call back after the vehicle is driven into an open area.

Cellular and GPS Antennas

Cellular reception is required for OnStar to send remote signals to the vehicle. Do not place items over or near the antenna to prevent blocking cellular and GPS signal reception.

Unable to Connect to OnStar Message

If there is limited cellular coverage or the cellular network has reached maximum capacity, this message may come on. Press On to try the call again or try again after driving a few miles into another cellular area.

Vehicle and Power Issues

OnStar services require a vehicle electrical system, wireless service, and GPS satellite technologies to be available and operating for features to function properly. These systems may not operate if the battery is discharged or disconnected.

Add-on Electrical Equipment

The OnStar system is integrated into the electrical architecture of the vehicle. Do not add any electrical equipment. See *Add-On Electrical Equipment* ⇨ *153*. Added electrical equipment may interfere with the operation of the OnStar system and cause it to not operate.

Vehicle Software Updates

OnStar or GM may remotely deliver software updates or changes to the vehicle without further notice or consent. These updates or changes may enhance or maintain safety, security, or the operation of the vehicle or the vehicle systems. Software updates or changes may affect or erase data or settings that are stored in the vehicle, such as saved navigation destinations or pre-set radio stations. Neither OnStar nor GM is responsible for any affected or erased data or settings. These updates or changes may also collect personal information. Such collection is described in the OnStar privacy statement or separately disclosed at the time of installation. These updates

or changes may also cause a system to automatically communicate with GM servers to collect information about vehicle system status, identify whether updates or changes are available, or deliver updates or changes. An active OnStar agreement constitutes consent to these software updates or changes and agreement that either OnStar or GM may remotely deliver them to the vehicle.

Privacy

The complete OnStar Privacy Statement may be found at www.onstar.com (U.S.), or www.onstar.ca (Canada). We recommend that you review it. If you have any questions, call 1-888-4ONSTAR (1-888-466-7827) or press to speak with an Advisor. Users of wireless communications are cautioned that the privacy of any information sent via wireless cellular communications cannot be assured. Third parties may unlawfully intercept or access transmissions and private communications without consent.

OnStar - Software Acknowledgements

To obtain the source code under GPL, LGPL, MPL, and other open source licenses, that is contained in this product, please visit https://opensource.lge.com. In addition to the source code, all referred license terms, warranty disclaimers, and copyright notices are available for download. This offer is valid for a period of three years after our last shipment of this product. This offer is valid to anyone in receipt of this information.

*Provided through LG Electronics Inc., who is solely responsible for provisions of related OSS compliance.

Connected Services

Connected Services

Navigation 255
Connections 255
Diagnostics 256

Navigation

Navigation requires a specific OnStar or connected service plan.

If equipped, press On to receive Turn-by-Turn directions. A destination transfer from OnStar will show the detail view of the destination when it is transferred from OnStar to the radio. Services vary by model. Map coverage is available in the United States and Canada. See www.onstar.com (U.S.) or www.onstar.ca (Canada).

Turn-by-Turn Navigation

1. Press On to connect to an Advisor.
2. Request directions to be downloaded to the vehicle.
3. Follow the voice-guided commands.

Connections

The following services help with staying connected.

For coverage maps, see www.onstar.com (U.S.) or www.onstar.ca (Canada).

Ensuring Security

Change the default password for the myChevrolet mobile application. Use a combination of letters and numbers to increase the security.

myChevrolet App

If available, download the myChevrolet mobile app to compatible Apple and Android smartphones.

Features are subject to change. For myChevrolet app information and compatibility, see my.chevrolet.com.

An active OnStar or connected service plan may be required. A compatible device, factory-installed remote start, and power locks are required. Data rates apply. See www.chevrolet.com or www.onstar.com for details and system limitations.

Wireless Configuration

Export of this vehicle to another region may require reset of internal settings for wireless communication configuration to ensure regulatory compliance or enable connectivity. See your dealer. The end-user of the device does not have an option to modify the regulatory wireless configuration.

Diagnostics

By monitoring and reporting on the vehicle's key systems, OnStar Advanced Diagnostics, if equipped, provides a way to keep up on maintenance. Capabilities vary by model. See www.onstar.com for details and system limitations. Features are subject to change. For updates on feature capabilities, see https://www.chevrolet.com/owners. Message and data rates may apply.

Index

A

Accessories and Modifications..... 155
Accessory Power..... 130
Additional
OnStar Information..... 251
Add-On Electrical Equipment..... 153
Agreements
Trademarks and License..... 108
Aiming
Headlight, Front..... 176
Air
Cleaner/Filter, Engine..... 164
Vents..... 114
Airbags
Adding Equipment to the Vehicle..... 43
How Does an Airbag Restrain?..... 38
On-Off Light..... 75
On-Off Switch..... 40
Readiness Light..... 75
Replacing System Parts after a Crash..... 43
Servicing Airbag-Equipped Vehicles..... 42
System..... 34
System Check..... 43
What Makes an Airbag Inflate?..... 38
What Will You See after an Airbag Inflates?..... 39
When Should an Airbag Inflate?..... 37
Where Are the Airbags?..... 36
Alarm
Vehicle Security..... 16
Alert
Side Blind Zone (SBZA)..... 147
All-Season Tires..... 188
AM-FM Radio..... 101
Antenna
Fixed Mast..... 104
Multi-band..... 104
Antilock Brake System (ABS)..... 137
Warning Light..... 79
Appearance Care
Exterior..... 216
Interior..... 220
Ashtrays..... 70
Assistance
Program, Roadside..... 241
Audio
Theft-Deterrent Feature..... 98
Automatic
Door Locks..... 12
Transmission..... 132
Transmission Fluid..... 164
Transmission Shift Lock Control Function Check..... 175
Automatic Transmission
Manual Mode..... 136
Auxiliary
Devices..... 104

Avoiding Untrusted Media Devices..... 104
Axle
Rear..... 173

B

Battery
Exterior Lighting Battery Saver..... 96
Jump Starting..... 212
Load Management..... 95
Power Protection..... 96
Battery - North America..... 173
Blade Replacement, Wiper..... 176
Brakes..... 171
Antilock..... 137
Brake Assist..... 138
Fluid..... 172
Parking Brake..... 137
System Warning Light..... 78
Braking..... 118
Break-In, New Vehicle..... 126
Bulb Replacement..... 176
Center High-Mounted Stoplight..... 178
Front Turn Signal, Sidemarker, and Parking Lights..... 177
Halogen Bulbs..... 177
License Plate Lights..... 179
Taillights..... 177
Buying New Tires..... 199

C

Calibration
Compass..... 66
California
Perchlorate Materials Requirements..... 155
Proposition 65 Warning..... 1
Warranty Information..... 238
Camera
Rear Vision (RVC)..... 143
Canadian Vehicle Owners..... 2
Capacities and Specifications..... 232
Carbon Monoxide
Engine Exhaust..... 132
Winter Driving..... 121
Cargo
Door Relocking..... 12
Tie-Downs..... 63
Caution, Danger, and Warning..... 2
Chains and Other Traction Devices
Tire..... 202
Charging
System Light..... 76
Check
Ignition Transmission Lock..... 175
Child Restraints
Infants and Young Children..... 45
Lower Anchors and Tethers for Children..... 51
Older Children..... 44
Securing..... 58, 60
Systems..... 47
Where to Put..... 49
Child Safety Locks..... 13
Cigarette Lighter..... 69
Circuit Breakers..... 180
Cleaning
Exterior Care..... 216
Interior Care..... 220
Climate Control Systems..... 110
Rear..... 112
Rear Heating System..... 111
Clock..... 68
Cluster, Instrument..... 71
Collision Damage Repair..... 244
Compartments
Storage..... 63
Compass..... 66
Connected Services
Connections..... 255
Diagnostics..... 256
Navigation..... 255
Connections
Connected Services..... 255
Control
of a Vehicle..... 118
Traction and Electronic Stability..... 139

Controls
Headlight... 91
Convex Mirrors... 17
Coolant
Engine Temperature Gauge... 74
Cooling and Heating... 110
Cooling System... 165
Courtesy Transportation Program... 243
Cruise Control... 140
Light... 82
Customer Assistance
Offices... 240
Text Telephone (TTY) Users... 240
Customer Information
Publications Ordering Information... 245
Customer Satisfaction Procedure... 236
Customer Support
and Online Account... 240
Cybersecurity... 247

D

Damage Repair, Collision... 244
Danger, Warning, and Caution... 2
Dashboard... 4
Data Collection
OnStar... 248
Data Recorders, Event... 248
Daytime Running Lights... 92
Defensive Driving... 117
Delayed
Locking... 12
Devices
Auxiliary... 104
Diagnostics
Connected Services... 256
Disabled Vehicle
Transporting... 215
Distracted Driving... 117
Dome Lights... 94
Door
Cargo Door Relocking... 12
Delayed Locking... 12
Locks... 11
Power Locks... 12
Rear Doors... 15
Side... 13
Sliding... 14
Drive Belt Routing, Engine... 235
Driver
Assistance Systems... 142
Information Center (DIC)... 82
Driving
Defensive... 117
for Better Fuel Economy... 117
Hill and Mountain Roads... 121
If the Vehicle is Stuck... 122
Impaired... 118
Loss of Control... 120
Off-Road Recovery... 119
Vehicle Load Limits... 123
Wet Roads... 120
Winter... 121

E

Electrical
Equipment, Add-On... 153
Electrical System
Engine Compartment Fuse Block... 180
Floor Console Fuse Block... 185
Fuses and Circuit Breakers... 180
Overload... 179
Electronic Stability Control (ESC) Off
Light... 80
Emergency
OnStar... 251
Engine
Air Cleaner/Filter... 164
Check Light (Malfunction Indicator)... 77
Compartment Overview... 158
Coolant Heater... 130
Coolant Temperature Gauge... 74
Cooling System... 165
Drive Belt Routing... 235
Exhaust... 132
Fan... 169
Oil Life System... 163
Oil Pressure Gauge... 73

Oil Pressure Light..... 81
Overheating..... 168
Power Messages..... 86
Running While Parked..... 132
Starting..... 128
Enhanced Technology Glass..... 21
Entry Lighting..... 95
Event Data Recorders..... 248
Exit Lighting..... 95
Extended Mirrors..... 18
Extender, Seat Belt..... 32
Exterior
Lighting Battery Saver..... 96

F

Fan
Engine..... 169
Fast Idle System..... 129
Filter
Engine Air Cleaner..... 164
Fixed Mast Antenna..... 104
Flashers, Hazard Warning..... 93
Flat Tire..... 203
Changing..... 204
Floor Mats..... 223
Fluid
Automatic Transmission..... 164
Brakes..... 172
Power Steering..... 170
Washer..... 170
Folding Mirrors..... 19
Forward
Collision Alert (FCA) System..... 145
Frequency Statement
Radio..... 246
Front
Storage..... 63
Front Seats
Adjustment..... 22
Fuel
Recommended..... 150
Additives..... 150
Economy, Driving for Better..... 117
Filling a Portable Fuel Container..... 152
Filling the Tank..... 150
Foreign Countries..... 150
Gauge..... 72
Low Fuel Warning Light..... 81
Prohibited Fuels..... 150
Top Tier..... 149
Full-Size Spare Tire..... 212
Fuses
Engine Compartment Fuse Block..... 180
Floor Console Fuse Block..... 185
Fuses and Circuit Breakers..... 180

G

Gauges
Engine Coolant Temperature..... 74
Engine Oil Pressure..... 73
Fuel..... 72
Odometer..... 71
Speedometer..... 71
Trip Odometer..... 71
Voltmeter..... 74
Warning Lights and Indicators..... 70
General Information
Service and Maintenance..... 225
Towing..... 152
Vehicle Care..... 155
Glass, Enhanced Technology..... 21
GM Mobility Reimbursement Program..... 241

H

Halogen Bulbs..... 177
Hazard Warning Flashers..... 93
Headlights
Aiming, Front..... 176
Bulb Replacement..... 176
Controls..... 91
High-Beam On Light..... 82
Off Reminder..... 92
System, Automatic..... 92
Head Restraints..... 22

Heated
Mirrors..... 19
Heater
Engine Coolant..... 130
Heating
Rear..... 111
Heating and Cooling..... 110
High-Beam
On Light..... 82
Systems..... 92
Hill
and Mountain Roads..... 121
Start Assist (HSA)..... 138
Hood..... 156
Horn..... 66
How to Wear Seat Belts Properly..... 28

I

Idle System
Fast..... 129
Ignition Positions..... 127
Ignition Transmission Lock Check..... 175
Immobilizer..... 16
Indicators
Vehicle Ahead..... 79
Warning Lights and Gauges..... 70
Infants and Young Children, Restraints..... 45
Information
Publication Ordering..... 245
Infotainment..... 97
Inspection
Multi-Point Vehicle..... 228
Instrument Cluster..... 71
Instrument Panel Overview..... 4
Interior
Rearview Mirrors..... 19
Introduction..... 2

J

Jump
Starting..... 212

K

Keyless Entry
Remote (RKE) System Operation..... 8
Keys..... 6

L

Labeling, Tire Sidewall..... 189
Lane
Departure Warning (LDW)..... 148
Departure Warning Light..... 79
Lap-Shoulder Belt..... 30
LATCH System
Replacing Parts after a Crash..... 57
Lighter, Cigarette..... 69
Lighting
Entry..... 95
Exit..... 95
Illumination Control..... 94
Lights
Airbag On-Off..... 75
Airbag Readiness..... 75
Antilock Brake System (ABS) Warning..... 79
Brake System Warning..... 78
Center High-Mounted Stoplight..... 178
Charging System..... 76
Cruise Control Light..... 82
Daytime Running..... 92
Dome..... 94
Electronic Stability Control (ESC), Off..... 80
Engine Oil Pressure..... 81
Exterior Lighting Battery Saver..... 96
Front Turn Signal, Sidemarker, and
Parking Lights..... 177
Gauges and Indicators..... 70
High-Beam On..... 82
Lane Departure Warning..... 79
License Plate Lights..... 179
Low Fuel Warning..... 81
Malfunction Indicator (Check Engine)..... 77
Reading..... 95
Seat Belt Reminders..... 75
Security..... 82
Taillights..... 177
Tire Pressure..... 80

Tow/Haul Mode..... 79
Traction Control System (TCS)/
Electronic Stability Control Light..... 80
Locking Rear Axle..... 140
Locks
Automatic Door..... 12
Cargo Door Relocking..... 12
Delayed Locking..... 12
Door..... 11
Lockout Protection..... 12
Power Door..... 12
Safety..... 13
Loss of Control..... 120
Lower Anchors and Tethers for Children
(LATCH System)..... 51
Low Fuel Warning Light..... 81

M

Maintenance
Records..... 231
Schedule..... 226
Maintenance Schedule
Recommended Fluids and Lubricants.... 229
Manual
Mirrors..... 18
Mode..... 136
Windows..... 20
Media
Avoiding Untrusted Devices..... 104
Messages
Engine Power..... 86
Vehicle..... 86
Vehicle Speed..... 87
Mirrors
Convex..... 17
Folding..... 19
Heated..... 19
Interior Rearview..... 19
Manual..... 18
Manual Rearview..... 19
Power..... 18
Trailer Tow..... 18
Monitor System, Tire Pressure..... 193
Multi-band Antenna..... 104
Multi-Point Vehicle Inspection (MPVI)..... 228

N

Navigation
Connected Services..... 255
New Vehicle Break-In..... 126
Noise Control System..... 174

O

Odometer..... 71
Trip..... 71
Off-Road
Recovery..... 119
Oil
Engine..... 161
Engine Oil Life System..... 163
Engine Oil Pressure Gauge..... 73
Pressure Light..... 81
Older Children, Restraints..... 44
Online Account and Customer Support..... 240
OnStar..... 248
Additional Information..... 251
Emergency..... 251
Overview..... 250
Security..... 251
Operation
Infotainment System..... 100
Outlets
Power..... 68
Overheating, Engine..... 168
Overview..... 99
Instrument Panel..... 4

P

Park
Assist..... 144
Parking
Brake..... 137
Brake and P (Park) Mechanism Check..... 175
Over Things That Burn..... 131
Perchlorate Materials Requirements,
California..... 155

Personalization
Vehicle..... 87
Power
Door Locks..... 12
Mirrors..... 18
Outlets..... 68
Protection, Battery..... 96
Retained Accessory (RAP)..... 130
Seat Adjustment..... 23
Steering Fluid..... 170
Windows..... 20
Pregnancy, Using Seat Belts..... 32
Privacy
Vehicle Data Recording..... 247
Program
Courtesy Transportation..... 243
Prohibited Fuels..... 150
Proposition 65 Warning
California..... 1
Publication Ordering Information..... 245

R

Radiator..... 165
Radio
AM-FM Radio..... 101
Frequency Statement..... 246
Reception..... 103
Satellite..... 102
Reading Lights..... 95
Rear
Axle..... 173
Climate Control System..... 112
Doors..... 15
Locking Axle..... 140
Seats..... 24
Vision Camera (RVC)..... 143
Windows..... 21
Rearview Mirrors..... 19
Reclining Seatbacks..... 23
Recommended
Fuel..... 150
Recommended Fluids and Lubricants..... 229
Records
Maintenance..... 231
Recreational Vehicle Towing..... 216
Reimbursement Program, GM Mobility..... 241
Reminder
Headlights Off..... 92
Seat Belt..... 75
Remote
Keyless Entry (RKE) System..... 8
Keyless Entry (RKE) System Operation..... 8
Start..... 10
Replacement Parts
Airbags..... 43
Replacing
Airbag System..... 43
LATCH System Parts After a Crash..... 57
Seat Belt System Parts after a Crash..... 33
Reporting Safety Defects
Canadian Government..... 247
General Motors..... 247
U.S. Government..... 246
Retained Accessory Power (RAP)..... 130
Roads
Driving, Wet..... 120
Roadside Assistance Program..... 241
Rotation
Tires..... 197
Routing, Engine Drive Belt..... 235
Running the Vehicle While Parked..... 132

S

Safety
Locks..... 13
System Check..... 33
Safety Defects Reporting
Canadian Government..... 247
General Motors..... 247
U.S. Government..... 246
Satellite Radio..... 102
Scheduling Appointments..... 243
Seat Belts..... 27
Care..... 33
Extender..... 32
How to Wear Seat Belts Properly..... 28

Lap-Shoulder Belt..... 30
Reminders..... 75
Replacing after a Crash..... 33
Use During Pregnancy..... 32
Seats
Adjustment, Front..... 22
Head Restraints..... 22
Power Adjustment, Front..... 23
Rear..... 24
Reclining Seatbacks..... 23
Securing Child Restraints..... 58, 60
Security
Light..... 82
OnStar..... 251
Vehicle..... 15
Vehicle Alarm..... 16
Service..... 115
Maintenance Records..... 231
Accessories and Modifications..... 155
Doing Your Own Work..... 155
Maintenance, General Information..... 225
Parts Identification..... 232
Scheduling Appointments..... 243
Services
Special Application..... 229
Servicing the Airbag System..... 42
Shift Lock Control Function Check,
Automatic Transmission..... 175
Side
Blind Zone Alert (SBZA)..... 147
Side Door..... 13
Signals, Turn and Lane-Change..... 94
Sliding Door..... 14
Special Application Services..... 229
Specifications and Capacities..... 232
Speedometer..... 71
Start
Assist, Hill..... 138
Remote..... 10
Starter Switch Check..... 174
Starting the Engine..... 128
Steering..... 118
Fluid, Power..... 170
Wheel Adjustment..... 65
Storage
Compartments..... 63
Front..... 63
Stuck Vehicle..... 122
Sun Visors..... 21
Swing-out Windows..... 20
Switches
Airbag On-Off..... 40
Symbols..... 3
System
Driver Assistance..... 142
Forward Collision Alert (FCA)..... 145
Infotainment..... 97
Noise Control..... 174
Systems
Airbag..... 34
High Beam..... 92

T

Text Telephone (TTY) Users..... 240
Theft-Deterrent Systems..... 17
Immobilizer..... 16
Tires..... 187
All-Season..... 188
Buying New Tires..... 199
Chains and Other Traction Devices..... 202
Changing..... 204
Designations..... 190
Different Size..... 200
Full-Size Spare..... 212
If a Tire Goes Flat..... 203
Inspection..... 196
Pressure..... 192
Pressure Light..... 80
Pressure Monitor Operation..... 194
Pressure Monitor System..... 193
Rotation..... 197
Sidewall Labeling..... 189
Terminology and Definitions..... 190
Uniform Tire Quality Grading..... 200
Wheel Alignment and Tire Balance..... 201

Wheel Replacement..... 202
When It Is Time for New Tires..... 198
Winter..... 188
Top Tier Fuel..... 149
Tow/Haul Mode..... 136
Tow/Haul Mode Light..... 79
Towing
General Information..... 152
Recreational Vehicle..... 216
Traction
Control System (TCS)/Electronic Stability Control Light..... 80
Control/Electronic Stability Control..... 139
Trademarks and License Agreements..... 108
Trailer
Tow Mirrors..... 18
Transmission
Automatic..... 132
Fluid, Automatic..... 164
Transportation Program, Courtesy..... 243
Transporting
a Disabled Vehicle..... 215
Trip Odometer..... 71
TTY Users
Customer Assistance..... 240
Turn and Lane-Change Signals..... 94

U

Uniform Tire Quality Grading..... 200
Using
This Manual..... 2

V

Vehicle
Ahead Indicator..... 79
Alarm System..... 16
Canadian Owners..... 2
Control..... 118
Data Recording and Privacy..... 247
Identification Number (VIN)..... 232
Load Limits..... 123
Messages..... 86
Personalization..... 87
Security..... 15
Speed Messages..... 87
Symbols..... 3
Vehicle Care
Tire Pressure..... 192
Ventilation, Air..... 114
Visors..... 21
Voltmeter Gauge..... 74

W

Warning
Brake System Light..... 78
Caution and Danger..... 2
Hazard Flashers..... 93
Lane Departure (LDW)..... 148
Lights, Gauges, and Indicators..... 70
Warranty Information
California..... 238
Washer Fluid..... 170
Wheels
Alignment and Tire Balance..... 201
Different Size..... 200
Replacement..... 202
Where to Put the Restraint..... 49
Windows..... 19
Enhanced Technology Glass..... 21
Manual..... 20
Power..... 20
Rear..... 21
Swing-out Windows..... 20
Windshield
Replacement..... 176
Wiper/Washer..... 66
Winter
Driving..... 121
Tires..... 188
Wiper
Blade Replacement..... 176

Scan to Access

United States

Canada

Owner's Manuals
Warranty Information
Reference Guides
Links to GM Brand Websites
Many Additional Resources

Connected Services
1-888-4-ONSTAR

MIX
Paper | Supporting responsible forestry
Papier | Pour une gestion forestière responsable
Papel | Apoyando la silvicultura responsable
FSC® C132124
FSC
www.fsc.org

85010582 A