TABLE OF CONTENTS

1	**Before driving**	Adjusting and operating features such as door locks, mirrors, and steering column.
2	**When driving**	Driving, stopping and safe-driving information.
3	**Interior features**	Air conditioning and audio systems, as well as other interior features for a comfortable driving experience.
4	**Maintenance and care**	Cleaning and protecting your vehicle, performing do-it-yourself maintenance, and maintenance information.
5	**When trouble arises**	What to do if the vehicle needs to be towed, gets a flat tire, or is involved in an accident.
6	**Vehicle specifications**	Detailed vehicle information.
7	**For owners**	Reporting safety defects for U.S. owners, and seat belt and SRS airbag instructions for Canadian owners.
	Index	Alphabetical listing of information contained in this manual.

1 Before driving

1-1. Key information
Keys 30

1-2. Opening, closing and locking the doors
Smart key system..... 33
Wireless remote control 47
Side doors 51
Back door 56

1-3. Adjustable components (seats, mirrors, steering wheel)
Front seats 61
Rear seats..... 65
Head restraints..... 76
Seat belts 79
Steering wheel 86
Inside rear view mirror..... 87
Outside rear view mirrors 89

1-4. Opening and closing the windows and moon roof
Power windows 91
Power back window 94
Moon roof 98

1-5. Refueling
Opening the fuel tank cap 102

1-6. Theft deterrent system
Engine immobilizer system 106
Alarm 109
Theft prevention labels (for U. S. A.) 112

1-7. Safety information
Correct driving posture 113
SRS airbags 115
Front passenger occupant classification system..... 130
Child restraint systems 136
Installing child restraints 140

2 When driving

2-1. Driving procedures
Driving the vehicle 154
Engine (ignition) switch (vehicles without a smart key system) 164
Engine (ignition) switch (vehicles with a smart key system) 167
Automatic transmission 173
Turn signal lever 179
Parking brake 180
Horn..... 181

2-2. Instrument cluster
Gauges and meters 182
Indicators and warning lights 189
Accessory meter..... 194

2-3. Operating the lights and wipers

Headlight switch..... 198
Fog light switch 204
Windshield wipers and washer 205
Rear window wiper and washer 207

2-4. Using other driving systems

Cruise control..... 209
Intuitive parking assist..... 213
Rear view monitor system 218
Four-wheel drive system (part-time 4WD models).... 223
Four-wheel drive system (full-time 4WD models) 226
Active traction control system 230
AUTO LSD system..... 232
Rear differential lock system 235
Downhill assist control system 238
Crawl Control 241
Multi-terrain Select..... 245
Driving assist systems 253

2-5. Driving information

Off-road precautions..... 262
Cargo and luggage..... 267
Vehicle load limits..... 273
Winter driving tips..... 275
Trailer towing..... 280
Dinghy towing..... 293

3 Interior features

3-1. Using the air conditioning system and defogger

Manual air conditioning system..... 296
Automatic air conditioning system..... 302
Rear window and outside rear view mirror defoggers..... 310
Windshield wiper de-icer 312

3-2. Using the audio system

Audio system types 313
Using the radio 317
Using the CD player 324
Playing MP3 and WMA discs 333
Operating an iPod 341
Operating a USB memory 348
Optimal use of the audio system..... 355
Using the AUX port..... 360
Using the steering wheel audio switches..... 361

3-3. Using the Bluetooth® audio system

Bluetooth® audio system.... 364
Using the Bluetooth® audio system..... 367
Operating a Bluetooth® enabled portable player ... 372
Setting up a Bluetooth® enabled portable player ... 374
Bluetooth® audio system setup 379

3-4. Using the hands-free phone system (for cellular phone)

Hands-free phone system (for cellular phone) features 380
Using the hands-free phone system (for cellular phone) 384
Making a phone call 392
Setting a cellular phone..... 396
Security and system setup 401
Using the phone book 405

3-5. Using the interior lights

Interior lights list 413
• Interior lights 414
• Personal lights 414

3-6. Using the storage features

List of storage features..... 416
• Glove box 417
• Console box 418
• Coin holder 419
• Tissue pocket 420
• Pen holder 421
• Auxiliary box 422
• Cup holders 423
• Bottle holders 427

3-7. Other interior features

Sun visors..... 429
Vanity mirrors 430
Clock..... 431
Outside temperature display 433
Power outlets (12V DC)..... 436
Power outlets (120V AC).... 439
Seat heaters 446
Armrest..... 448
Floor mat 449
Compass 450
Luggage compartment features 456
Garage door opener 462
Safety Connect..... 469

4 Maintenance and care

4-1. Maintenance and care

Cleaning and protecting the vehicle exterior..... 478

Cleaning and protecting the vehicle interior..... 481

4-2. Maintenance

Maintenance requirements..... 484

General maintenance..... 486

Emission inspection and maintenance (I/M) programs..... 490

4-3. Do-it-yourself maintenance

Do-it-yourself service precautions 491

Hood 494

Engine compartment..... 495

Tires 514

Tire inflation pressure 520

Wheels 524

Air conditioning filter..... 526

Wireless remote control/ electronic key battery..... 528

Checking and replacing fuses 531

Light bulbs..... 541

5 When trouble arises

5-1. Essential information

Emergency flashers..... 554

If your vehicle needs to be towed..... 555

If you think something is wrong 561

Fuel pump shut off system..... 562

Event data recorder..... 563

5-2. Steps to take in an emergency

If a warning light turns on or a warning buzzer sounds..... 565

If you have a flat tire..... 578

If the engine will not start.... 591

If the shift lever cannot be shifted from P 593

If you lose your keys..... 595

If you cannot operate back door opener 596

If the electronic key does not operate properly..... 597

If the vehicle battery is discharged..... 599

If your vehicle overheats 604

If the vehicle becomes stuck..... 607

If your vehicle has to be stopped in an emergency 608

6 Vehicle specifications

6-1. Specifications

Maintenance data (fuel, oil level, etc.) 612

Fuel information 625

Tire information 628

6-2. Customization

Customizable features 640

6-3. Initialization

Items to initialize..... 646

7 For owners

Reporting safety defects for U.S. owners 648

Seat belt instructions for Canadian owners (in French)..... 649

SRS airbag instructions for Canadian owners (in French)..... 651

Index

Abbreviation list..... 664

Alphabetical index 666

What to do if... 677

Exterior

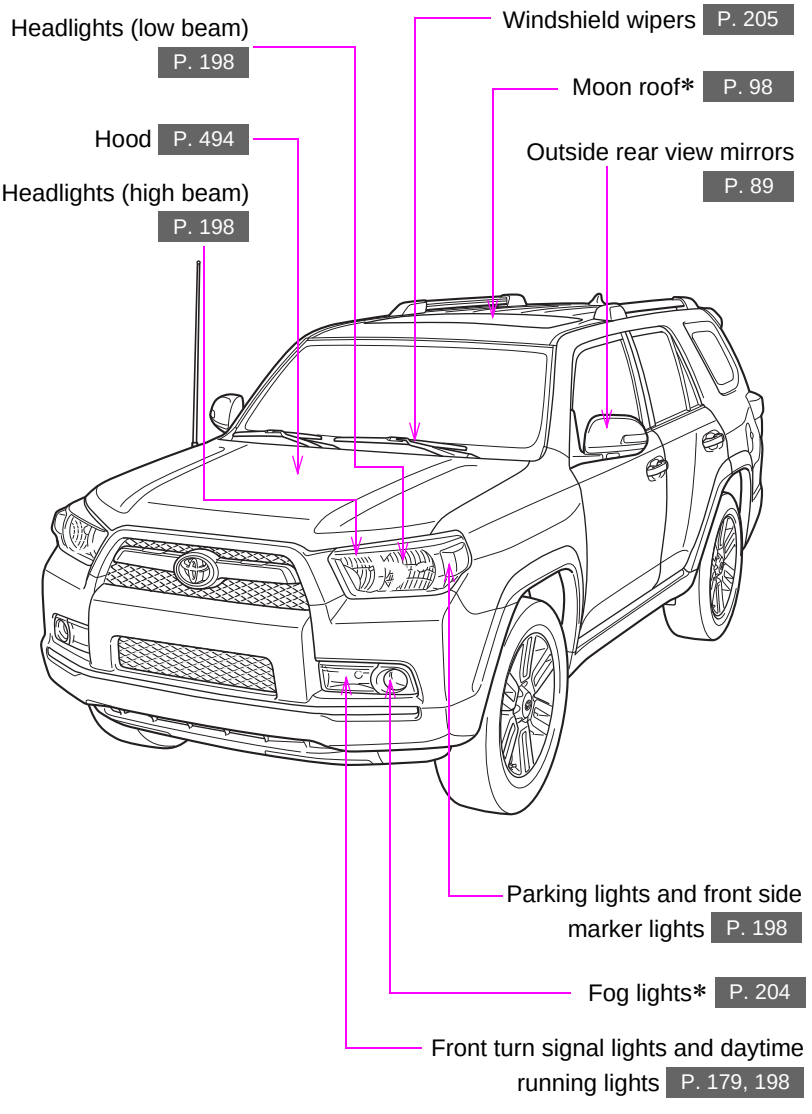
Headlights (low beam) P. 198
Hood P. 494
Headlights (high beam) P. 198
Windshield wipers P. 205
Moon roof* P. 98
Outside rear view mirrors P. 89
Parking lights and front side marker lights P. 198
Fog lights* P. 204
Front turn signal lights and daytime running lights P. 179, 198

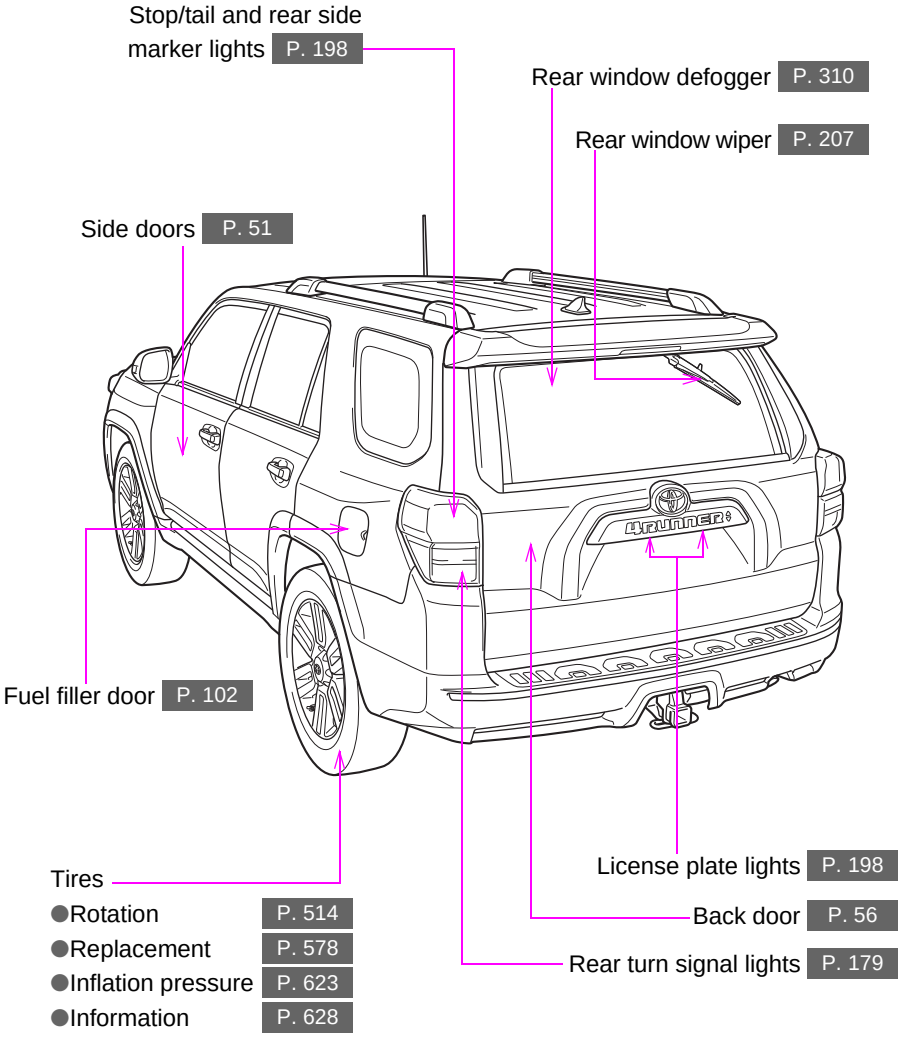
Stop/tail and rear side marker lights P. 198
Rear window defogger P. 310
Rear window wiper P. 207
Side doors P. 51
Fuel filler door P. 102
Tires
●Rotation P. 514
●Replacement P. 578
●Inflation pressure P. 623
●Information P. 628
License plate lights P. 198
Back door P. 56
Rear turn signal lights P. 179

*: If equipped

Interior

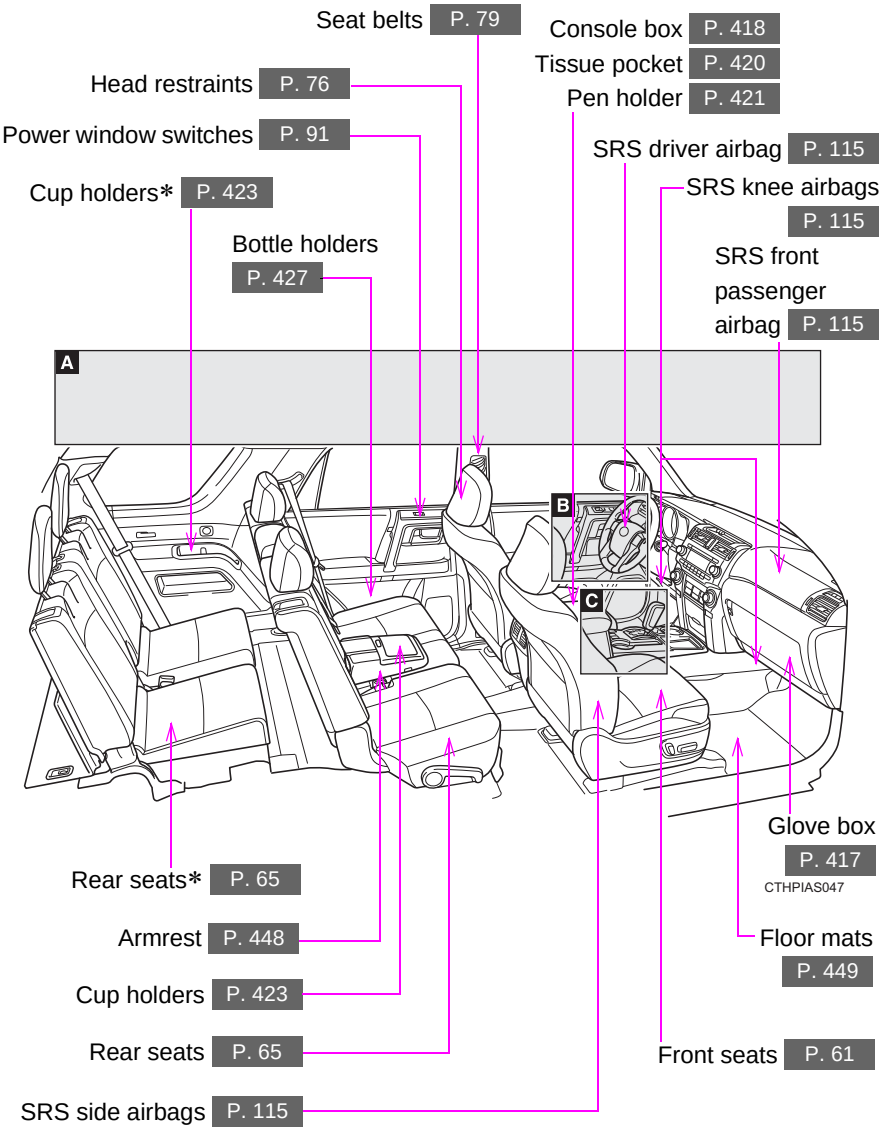
Seat belts P. 79
Console box P. 418
Tissue pocket P. 420
Pen holder P. 421
Head restraints P. 76
Power window switches P. 91
SRS driver airbag P. 115
Cup holders* P. 423
SRS knee airbags P. 115
Bottle holders P. 427
SRS front passenger airbag P. 115
A
B
C
Glove box P. 417
CTHPIAS047
Rear seats* P. 65
Armrest P. 448
Floor mats P. 449
Cup holders P. 423
Rear seats P. 65
Front seats P. 61
SRS side airbags P. 115

A

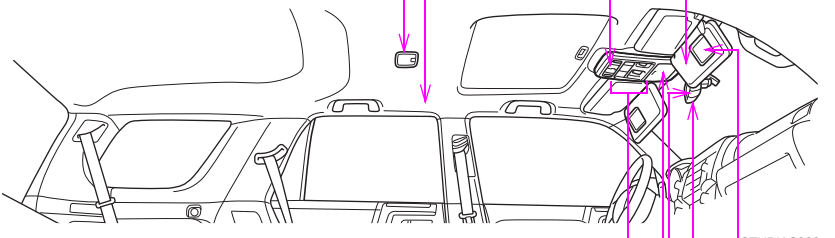

SRS curtain shield airbags P. 115

Personal lights P. 414

Interior light P. 414

Interior light P. 414

Sun visors P. 429

Garage door opener switches P. 462

“SOS” button* P. 469

Moon roof switches* P. 98

Active traction control switch* P. 230

VSC off switch P. 232

Rear differential lock switch* P. 235

Downhill assist control switch* P. 238

Auxiliary box* P. 422

Crawl Control switch* P. 241

Multi-terrain Select switch* P. 245

Rear view monitor system* P. 218

Inside rear view mirror P. 87

Vanity mirrors P. 430

*: If equipped

B

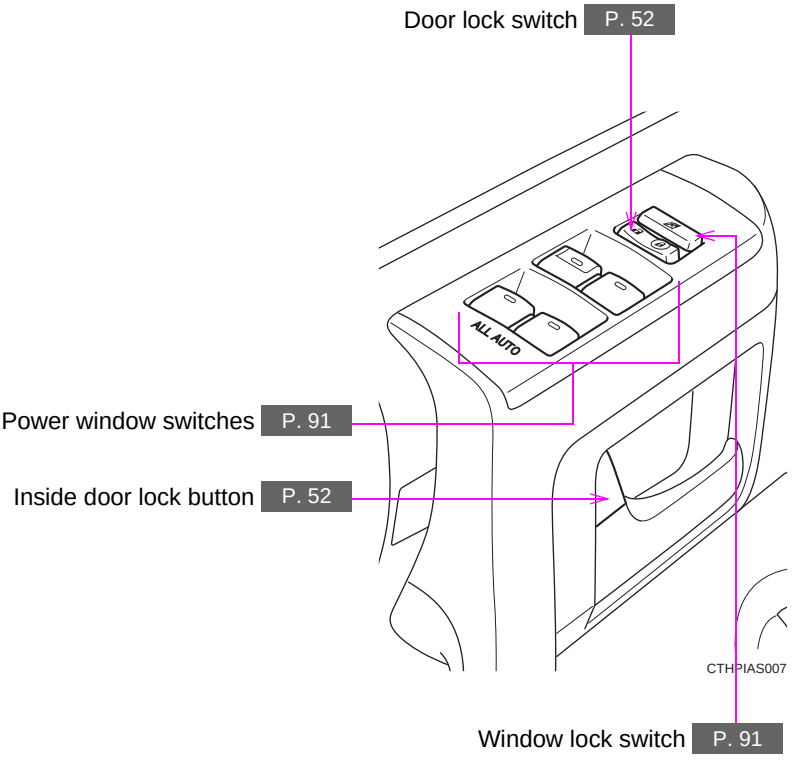
Door lock switch P. 52
ALL AUTO
Power window switches P. 91
Inside door lock button P. 52
CTHPIAS007
Window lock switch P. 91

C

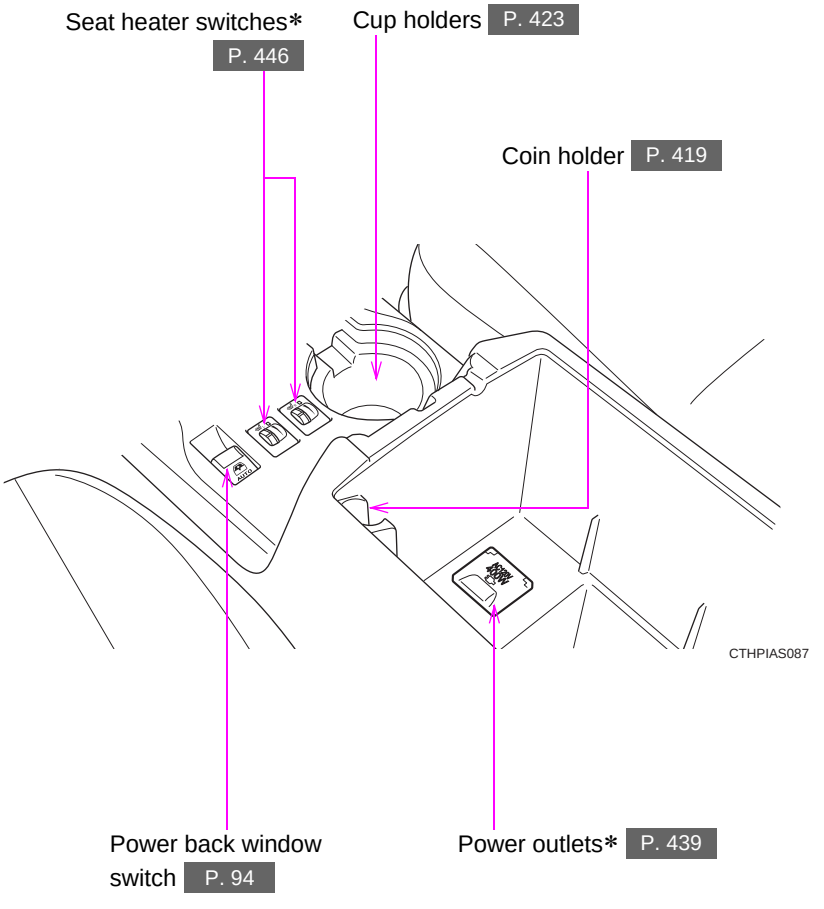

*: If equipped

Instrument panel

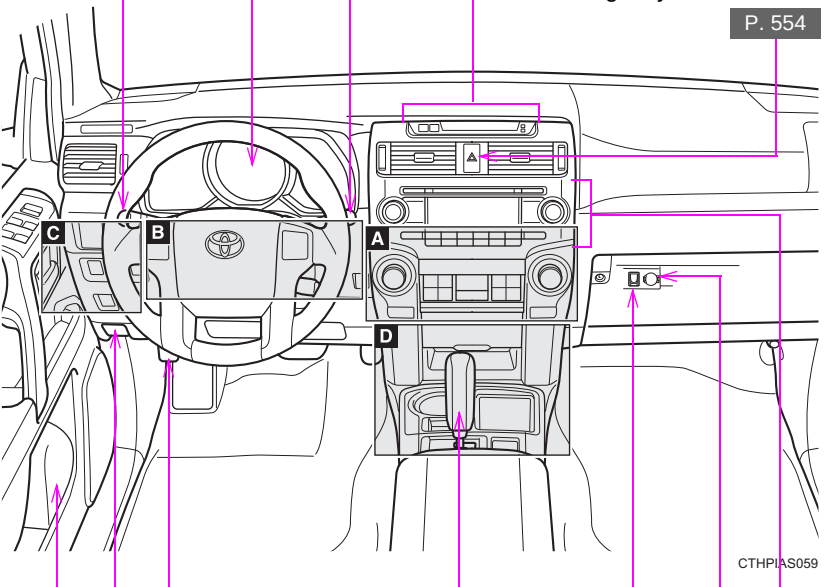

Headlight switch P. 198
Turn signal lever P. 179
Fog light switch* P. 204
Gauges and meters P. 182
Windshield wiper and washer switch P. 205
Rear window wiper and washer switch P. 207
Accessory meter P. 194
Compass P. 450
Clock P. 431
Outside temperature display P. 433
Emergency flasher switch P. 554
USB port* P. 348
Shift lever P. 173
Power outlets P. 436
Parking brake pedal P. 180
Hood lock release lever P. 494
Audio system* P. 313
Navigation system*1
Bottle holders P. 427

A

Vehicles with a manual air conditioning system

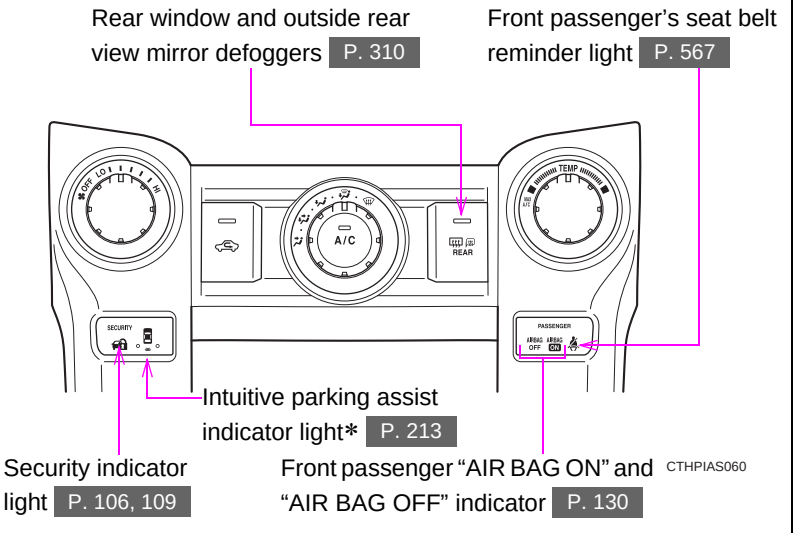

Vehicles with an automatic air conditioning system

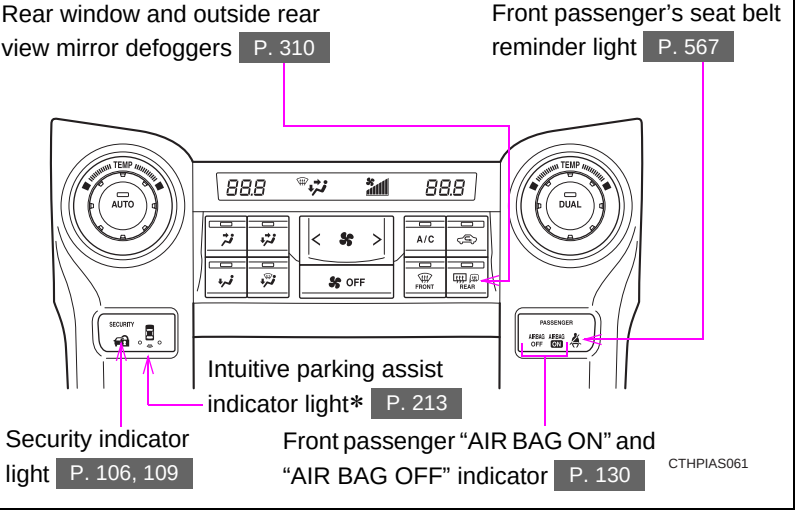

*: If equipped
*1: Refer to "Navigation System Owner's Manual".

B Vehicles without a smart key system

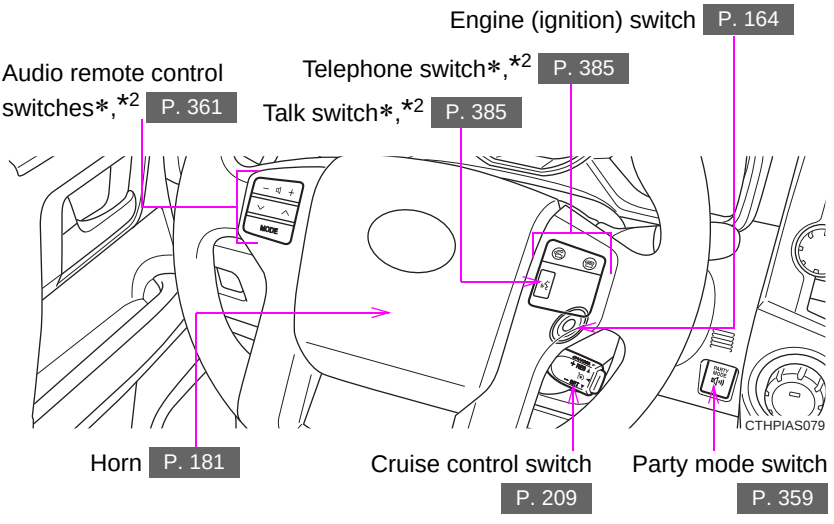

Vehicles with a smart key system

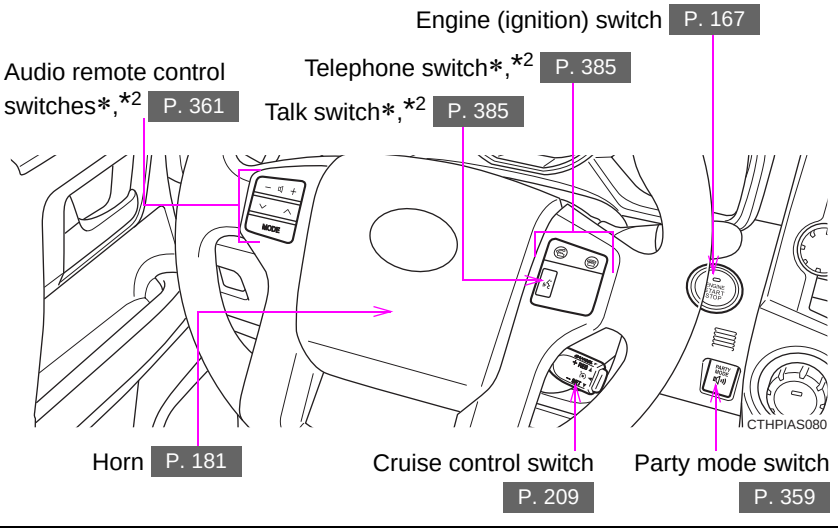

C

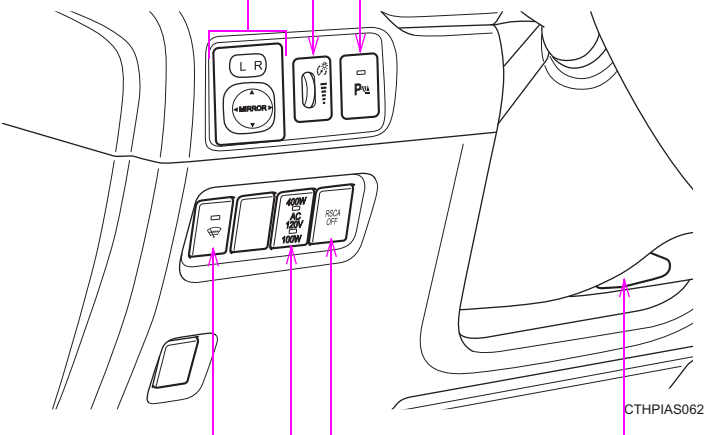

Outside rear view mirror switches P. 89

Instrument panel light control dial P. 187

Intuitive parking assist switch* P. 213

Windshield wiper de-icer switch* P. 312

Tilt and telescopic steering lock release lever P. 86

"RSCA OFF" switch P. 128

Power outlet main switch* P. 439

*: If equipped

*2: For vehicles with a navigation system, refer to the "Navigation System Owner's Manual".

D

Standard type transmission

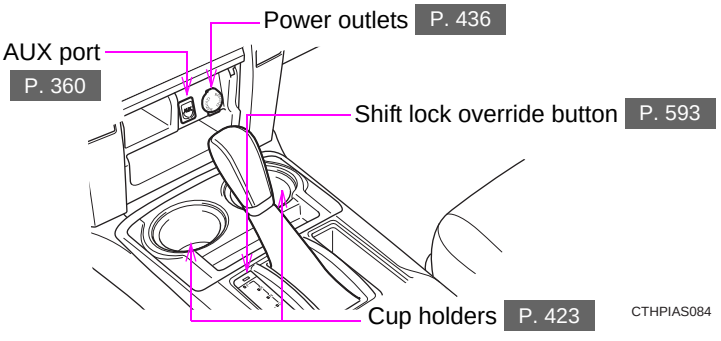

Multi-mode type transmission (2WD)

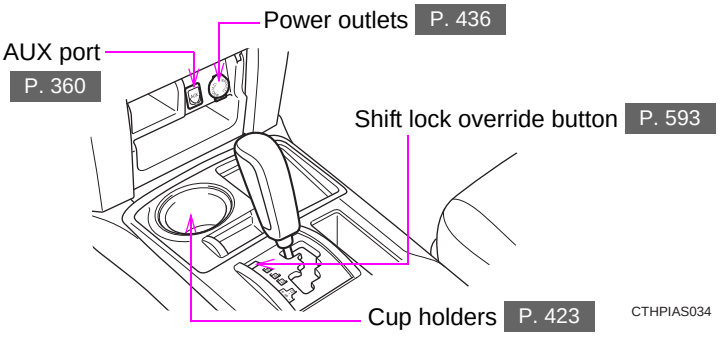

D

Multi-mode type transmission (part-time 4WD)

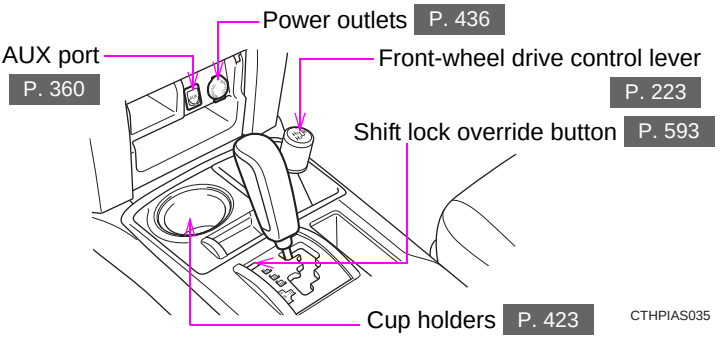

Multi-mode type transmission (full-time 4WD)

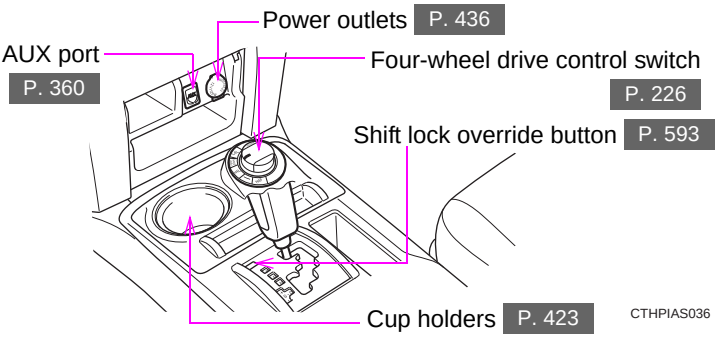

Luggage compartment

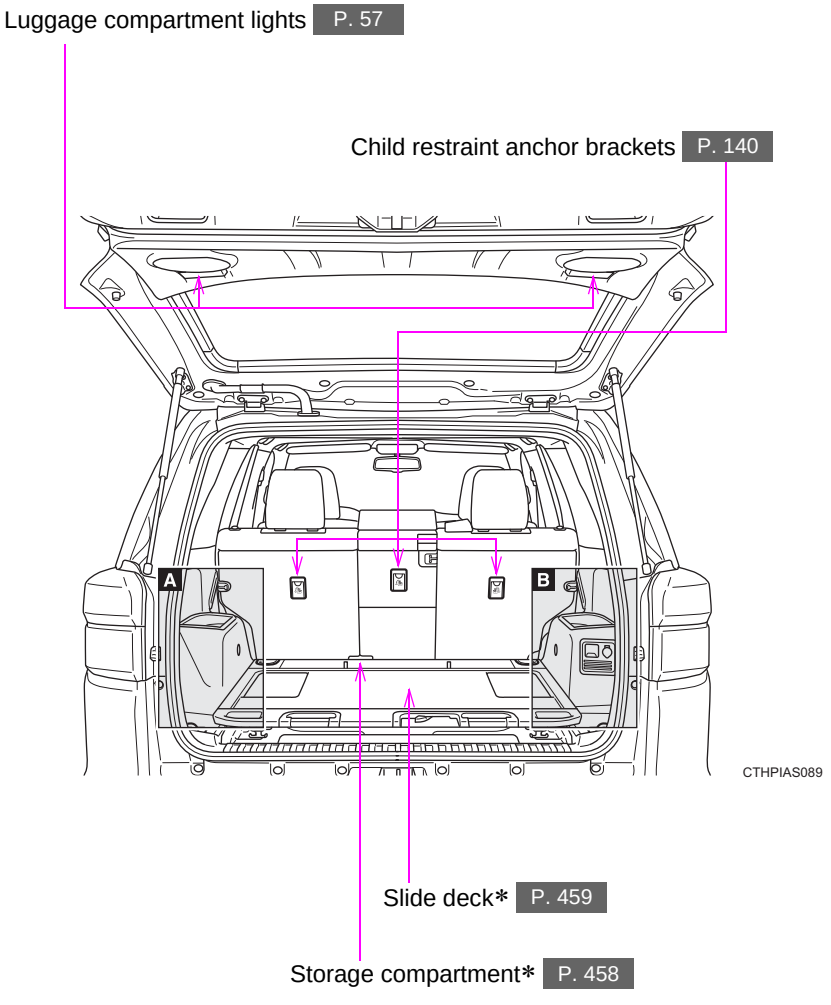

A **Vehicles without third row seats**

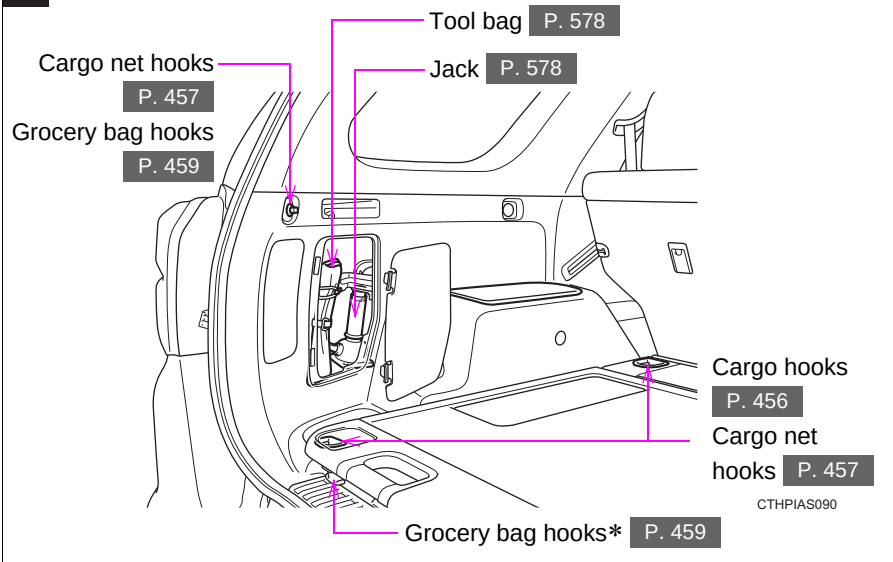

Vehicles with third row seats

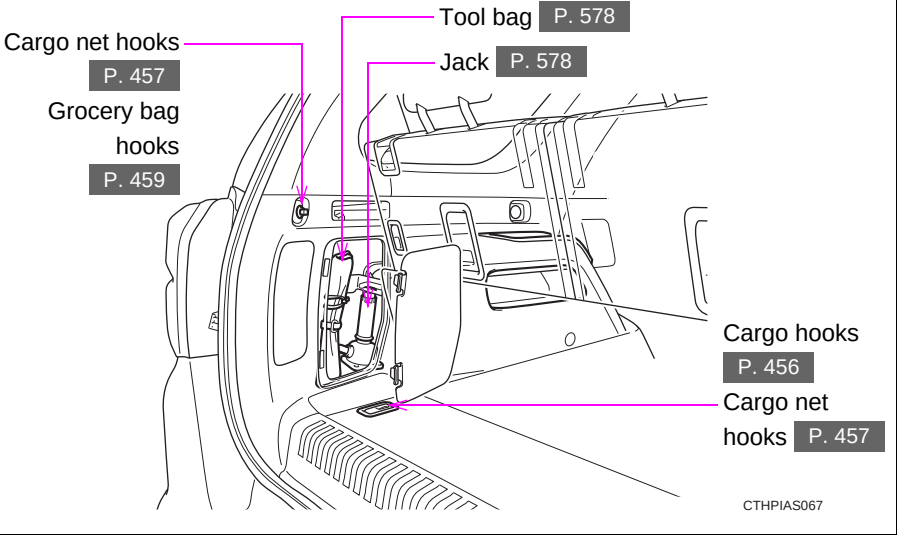

*: If equipped

B

Vehicles without third row seats

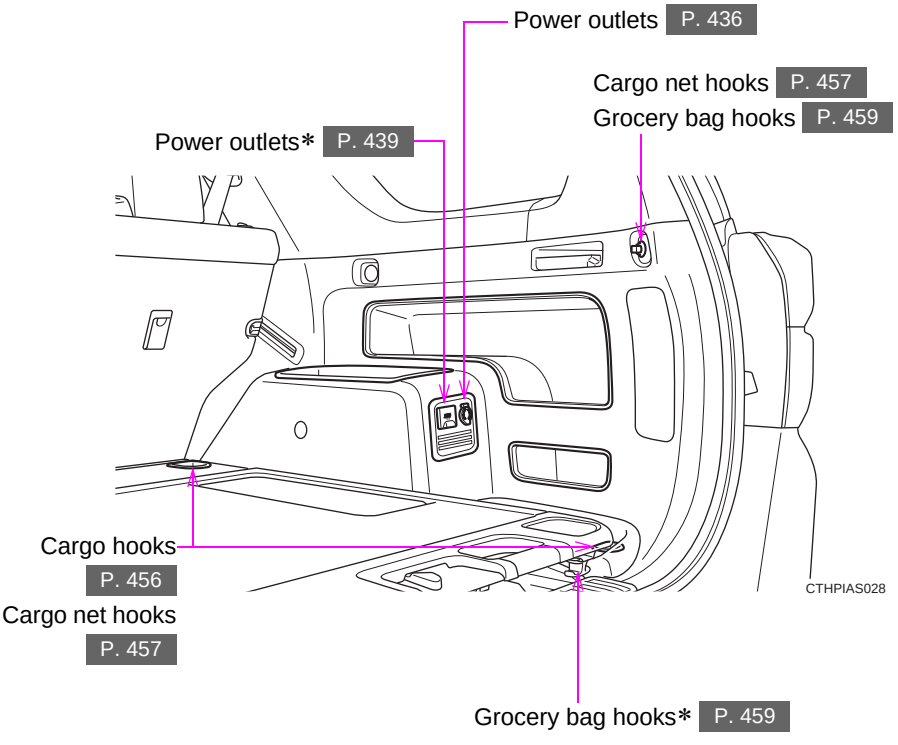

B

Vehicles with third row seats

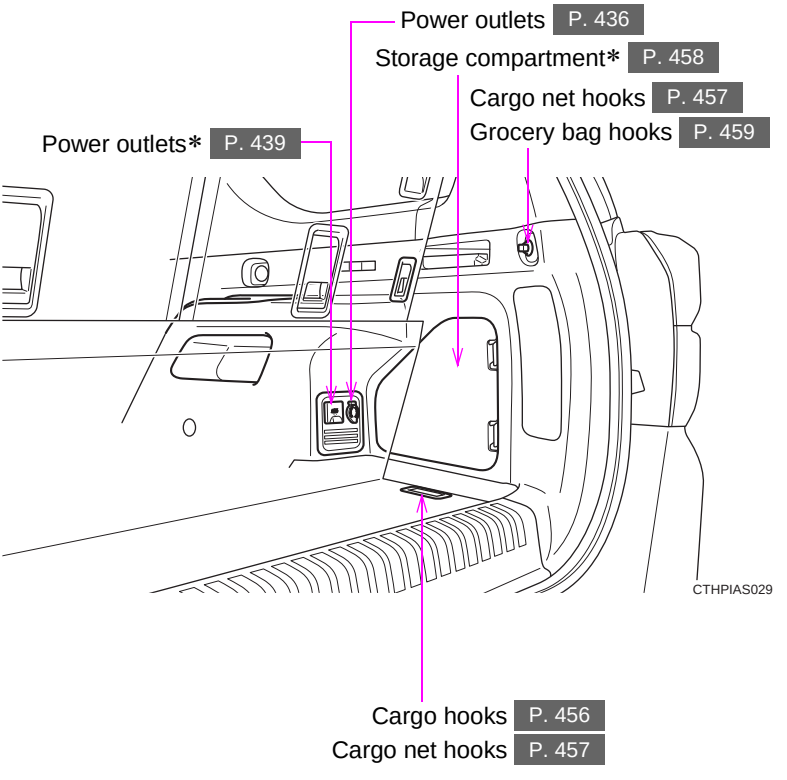

*: If equipped

For your information

Main Owner's Manual

Please note that this manual applies to all models and all equipment, including options. Therefore, you may find some explanations for equipment not installed on your vehicle.

All specifications provided in this manual are current at the time of printing. However, because of the Toyota policy of continual product improvement, we reserve the right to make changes at any time without notice.

Depending on specifications, the vehicle shown in the illustrations may differ from your vehicle in terms of equipment.

Noise from under vehicle after turning off the engine

Approximately five hours after the engine is turned off, you may hear sound coming from under the vehicle for several minutes. This is the sound of a fuel evaporation leakage check and, it does not indicate a malfunction.

Accessories, spare parts and modification of your Toyota

A wide variety of non-genuine spare parts and accessories for Toyota vehicles are currently available on the market. You should know that Toyota does not warrant these products and is not responsible for their performance, repair, or replacement, or for any damage they may cause to, or adverse effect they may have on, your Toyota vehicle.

This vehicle should not be modified with non-genuine Toyota products. Modification with non-genuine Toyota products could affect its performance, safety or durability, and may even violate governmental regulations. In addition, damage or performance problems resulting from the modification may not be covered under warranty.

Installation of a mobile two-way radio system

As the installation of a mobile two-way radio system in your vehicle may affect electronic systems such as the multi-port fuel injection system/sequential multi-port fuel injection system, cruise control system, anti-lock brake system, SRS airbag system and seat belt pretensioner system, be sure to check with your Toyota dealer for precautionary measures or special instructions regarding installation.

Scrapping of your Toyota

The SRS airbag and seat belt pretensioner devices in your Toyota contain explosive chemicals. If the vehicle is scrapped with the airbags and seat belt pretensioners left as they are, this may cause an accident such as fire. Be sure to have the systems of the SRS airbag and seat belt pretensioner removed and disposed of by a qualified service shop or by your Toyota dealer before you scrap your vehicle.

Perchlorate Material

Special handling may apply, See www.dtsc.ca.gov/hazardouswaste/perchlorate.

Your vehicle has components that may contain perchlorate. These components may include airbag, seat belt pretensioners, and wireless remote control batteries.

CAUTION

General precautions while driving

Driving under the influence: Never drive your vehicle when under the influence of alcohol or drugs that have impaired your ability to operate your vehicle. Alcohol and certain drugs delay reaction time, impair judgment and reduce coordination, which could lead to an accident that could result in death or serious injury.

Defensive driving: Always drive defensively. Anticipate mistakes that other drivers or pedestrians might make and be ready to avoid accidents.

Driver distraction: Always give your full attention to driving. Anything that distracts the driver, such as adjusting controls, talking on a cellular phone or reading can result in a collision with resulting death or serious injury to you, your occupants or others.

General precaution regarding children's safety

Never leave children unattended in the vehicle, and never allow children to have or use the key.

Children may be able to start the vehicle or shift the vehicle into neutral. There is also a danger that children may injure themselves by playing with the windows, the moon roof, or other features of the vehicle. In addition, heat build-up or extremely cold temperatures inside the vehicle can be fatal to children.

Symbols used throughout this manual

Cautions & Notices

CAUTION

This is a warning against something which, if ignored, may cause death or serious injury to people. You are informed about what you must or must not do in order to reduce the risk of death or serious injury to yourself and others.

NOTICE

This is a warning against something which, if ignored, may cause damage to the vehicle or its equipment. You are informed about what you must or must not do in order to avoid or reduce the risk of damage to your Toyota and its equipment.

Symbols used in illustrations

Safety symbol

The symbol of a circle with a slash through it means “Do not”, “Do not do this”, or “Do not let this happen”.

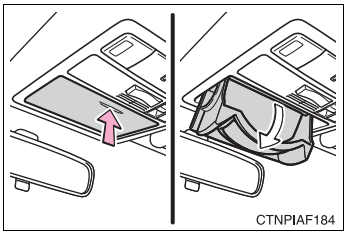

Arrows indicating operations

Indicates the action (pushing, turning, etc.) used to operate switches and other devices.

Indicates the outcome of an operation (e.g. a lid opens).

Before driving 1

1-1. Key information

Keys 30

1-2. Opening, closing and locking the doors

Smart key system 33

Wireless remote control 47

Side doors..... 51

Back door..... 56

1-3. Adjustable components (seats, mirrors, steering wheel)

Front seats 61

Rear seats..... 65

Head restraints..... 76

Seat belts 79

Steering wheel 86

Inside rear view mirror 87

Outside rear view mirrors..... 89

1-4. Opening and closing the windows and moon roof

Power windows 91

Power back window 94

Moon roof..... 98

1-5. Refueling

Opening the fuel tank cap 102

1-6. Theft deterrent system

Engine immobilizer system 106

Alarm..... 109

Theft prevention labels (for U. S. A.)..... 112

1-7. Safety information

Correct driving posture..... 113

SRS airbags..... 115

Front passenger occupant classification system 130

Child restraint systems..... 136

Installing child restraints 140

Keys

The following keys are provided with the vehicle.

Vehicles without a smart key system

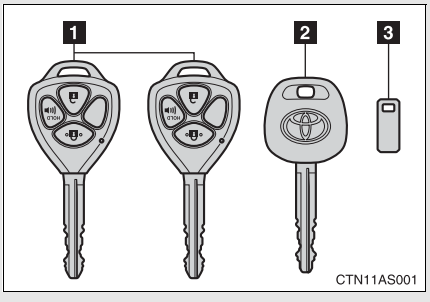

1 Master keys

Operating the wireless remote control function (→P. 47)

2 Valet key

3 Key number plate

Vehicles with a smart key system

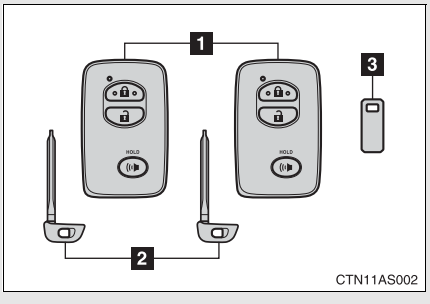

1 Electronic keys

- Operating the smart key system (→P. 33)
- Operating the wireless remote control function (→P. 47)

2 Mechanical keys

3 Key number plate

Using the mechanical key (vehicles with a smart key system)

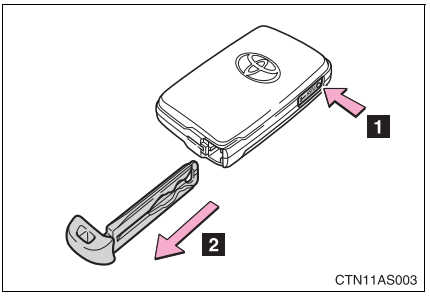

To take out the mechanical key, push the release button and take the key out.

After using the mechanical key, store it in the electronic key. Carry the mechanical key together with the electronic key. If the electronic key battery is depleted or the entry function does not operate properly, you will need the mechanical key. (→P. 597)

■ When required to leave the vehicle's key with a parking attendant

Lock the glove box as circumstances demand. (→P. 417)

Vehicles without a smart key system: Carry the master key for your own use and provide the attendant with the valet key.

Vehicles with a smart key system: Remove the mechanical key for your own use and provide the attendant with the electronic key only.

■ Key number plate

Keep the plate in a safe place such as your wallet, not in the vehicle. In the event that a key (without a smart key system) or mechanical key (with a smart key system) is lost, a new key can be made by your Toyota dealer using the key number plate. (→P. 595)

■ When riding in an aircraft

When bringing a key with wireless remote control function onto an aircraft, make sure you do not press any buttons on the key while inside the aircraft cabin. If you are carrying the key in your bag etc., ensure that the buttons are not likely to be pressed accidentally. Pressing a button may cause the key to emit radio waves that could interfere with the operation of the aircraft.

NOTICE

To prevent key damage

Observe the following:

- Do not drop the keys, subject them to strong shocks or bend them.
- Do not expose the keys to high temperatures for a long period of time.
- Do not get the keys wet or wash them in an ultrasonic washer etc.
- Do not attach metallic or magnetic materials to the keys or place the keys close to such materials.
- Do not disassemble the keys.
- Do not attach a sticker or anything else to the surface of the electronic key.
- Do not place the keys near objects that produce magnetic fields, such as TVs, audio systems, glass top ranges, or medical electrical equipment, such as low-frequency therapy equipment.

Carrying the electronic key on your person (vehicles with a smart key system)

Carry the electronic key 3.9 in. (10 cm) or more away from electric appliances that are turned on.

In case of a smart key system malfunction or other key-related problems (vehicles with a smart key system)

Take your vehicle with all the electronic keys provided with your vehicle to your Toyota dealer.

When a vehicle key is lost (vehicles with a smart key system)

If the key remains lost, the risk of vehicle theft increases significantly. Visit your Toyota dealer immediately with all remaining electronic keys that was provided with your vehicle.

Smart key system*

The following operations can be performed simply by carrying the electronic key on your person, for example in your pocket.
(The driver should always carry the electronic key.)

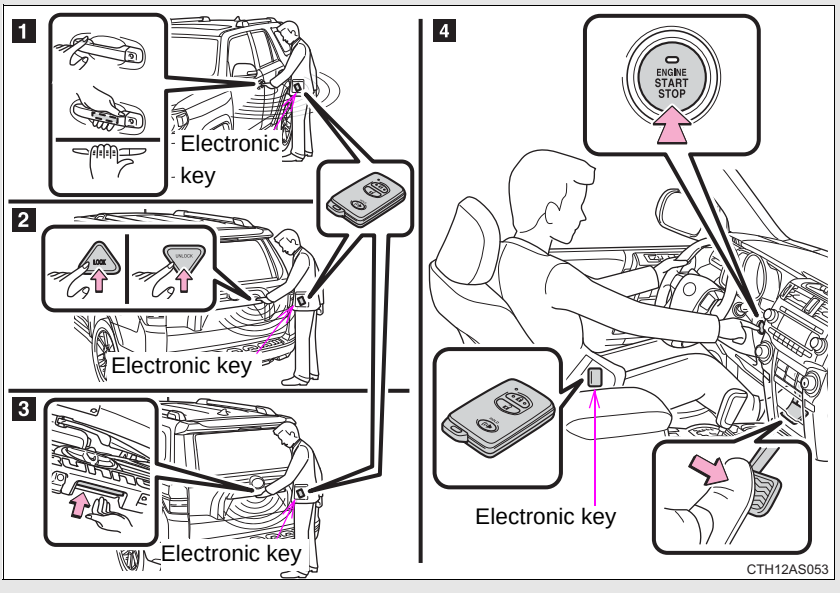

1 Locks and unlocks the side doors (→P. 34)

2 Locks, unlocks and opens the back door (→P. 35)

3 Opens the back door (→P. 34)

4 Starts the engine (→P. 167)

*: If equipped

Unlocking and locking the side doors (front door handles only)

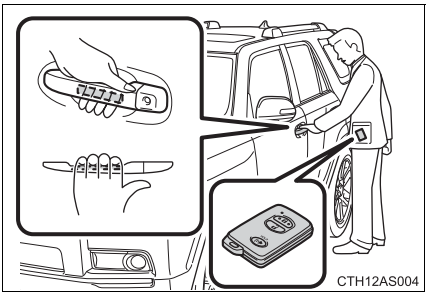

Grip the handle to unlock the door.

Make sure to touch the sensor on the back of the handle.

The doors cannot be unlocked for 3 seconds after the doors are locked.

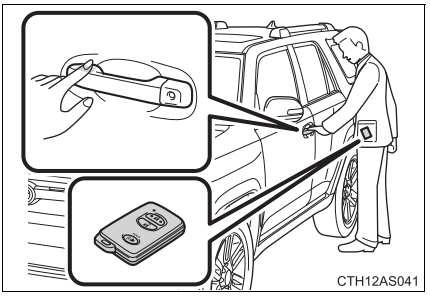

Touch the lock sensor (the indentation on the upper part of the door handle) to lock the doors.

Opening the back door

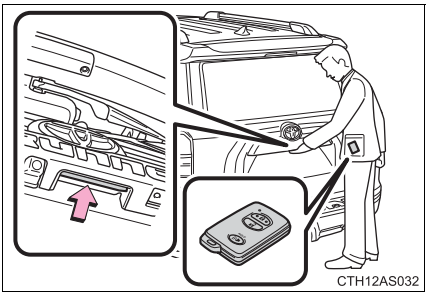

Press the back door opener.

The back door can be opened even if it is locked.

Unlocking and locking the back door

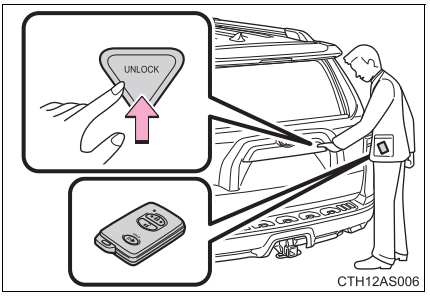

Press the button to unlock the door.

The back window can be opened by pressing and holding this button. (→P. 94)

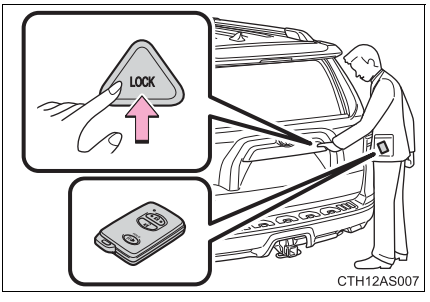

Press the button to lock the door.

The back window can be closed by pressing and holding this button. (→P. 94)

Antenna location and effective range

Antenna location

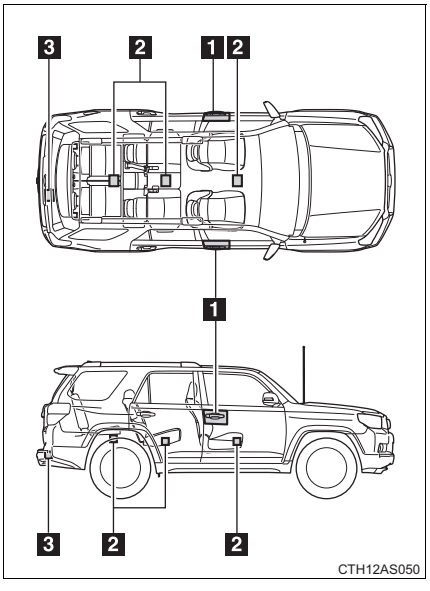

1 Antennas outside the cabin

2 Antennas inside the cabin

3 Antenna outside the luggage compartment

Effective range (areas within which the electronic key is detected)

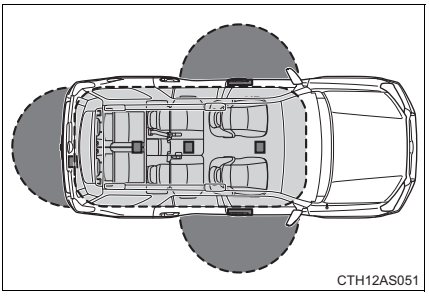

When locking or unlocking the doors

The system can be operated when the electronic key is within about 2.3 ft. (0.7 m) either of the outside front door handles and back door. (Only the doors detecting the key can be operated.)

When starting the engine or changing “ENGINE START STOP” switch modes

The system can be operated when the electronic key is inside the vehicle.

■ **Operation signals**

A buzzer sounds and the emergency flashers flash to indicate that the doors have been locked/unlocked. (Locked: once; Unlocked: twice)

■ **When the door cannot be locked by the lock sensor on the upper part of the door handle**

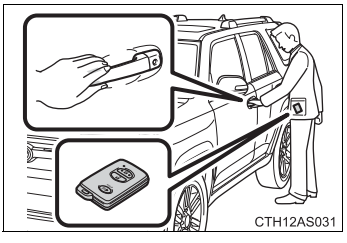

Touch both lock sensors on the upper and lower part of the door handle simultaneously.

■ **Alarms and warning indicators**

A combination of exterior and interior alarms as well as warning lights is used to prevent theft of the vehicle and accidents resulting from erroneous operation.

When any warning lights come on, take appropriate measures depending on which warning light comes on. (→P. 565)

The following table describes circumstances and correction procedures when only alarms are sounded.

Alarm	Situation	Correction procedure
Exterior alarm sounds once for 10 seconds	An attempt was made to lock the doors using the entry function while the electronic key was still inside the vehicle.	Retrieve the electronic key from the vehicle and lock the doors again.
	An attempt was made to lock either front door by opening a door and putting the inside lock button into the lock position, then closing the door by pulling on the outside door handle with the electronic key still inside the vehicle.	
Exterior alarm sounds once for 10 seconds	An attempt was made to lock the vehicle using the entry function while a door was open.	Close all of the doors and lock the doors again.
Interior alarm sounds continuously	An attempt was made to open the door and exit the vehicle when the shift lever was not in P.	Shift the shift lever to P.
Interior alarm pings repeatedly	The “ENGINE START STOP” switch was turned to ACCESSORY mode while the driver's door was open (The driver's door was opened when the “ENGINE START STOP” switch was in ACCESSORY mode.)	Turn the “ENGINE START STOP” switch off and close the driver's door.

Alarm	Situation	Correction procedure
Interior alarm sounds once.	The “ENGINE START STOP” switch was pressed after the doors were unlocked with the mechanical key.	Touch the electronic key to the “ENGINE START STOP” switch while depressing the brake pedal.
	The “ENGINE START STOP” switch was pressed two consecutive times without the electronic key being present.	

■ **Security feature**

If a door is not opened within approximately 60 seconds after the vehicle is unlocked, the security feature automatically locks the vehicle again.

■ **Battery-saving function**

In the following circumstances, the entry function is disabled in order to prevent the vehicle battery from discharging and the electronic key battery from depleting.

- When the entry function has not been used for 5 days or more
- When the electronic key has been left within approximately 6 ft. (2 m) of the vehicle for 10 minutes or more
- If the entry function has not been used for 14 days or more, the vehicle cannot be unlocked by a door other than the driver's door. To unlock the vehicle, grip the driver's door handle or use the wireless remote control or the mechanical key.

The system will resume operation when

- The vehicle is locked using the door handle lock switch when carrying the electronic key on your person.
- The vehicle is locked/unlocked using the wireless remote control. (→P. 47)
- The vehicle is locked/unlocked using the mechanical key. (→P. 597)

Conditions affecting operation

The smart key system uses weak radio waves. In the following situations, the communication between the electronic key and the vehicle may be affected, preventing the smart key system, wireless remote control and immobilizer system from operating properly. (Way of coping →P. 597)

- When the electronic key battery is depleted
- Near a TV tower, electric power plant, gas station, radio station, large display, airport or other facility that generates strong radio waves or electrical noise
- When carrying a portable radio, mobile phone, cordless phone or other wireless communication device
- When the electronic key is in contact with, or is covered by the following metallic objects
  - Cards to which aluminum foil is attached
  - Cigarette boxes that have aluminum foil inside
  - Metallic wallets or bags
  - Coins
  - Hand warmers made of metal
  - Media such as CDs and DVDs
- When multiple electronic keys are in the vicinity
- When other wireless keys (that emit radio waves) are being used nearby
- When carrying the electronic key together with the following devices that emit radio waves
  - Another vehicle's electronic key or a wireless key that emits radio waves
  - Personal computers or personal digital assistants (PDAs)
  - Digital audio players
  - Portable game systems
- If window tint with a metallic content or metallic objects are attached to the back window

■Note for the entry function

- Even when the electronic key is within the effective range (detection areas), the system may not operate properly in the following cases:
  - The electronic key is too close to the window or outside door handle, near the ground, or in a high place when the doors are locked or unlocked.
  - The electronic key is on the instrument panel or floor, in the glove box, or in the auxiliary box of the instrument panel.
- As long as the electronic key is within the effective range, the doors may be locked or unlocked by anyone. However, only the doors detecting the electronic key can be used to unlock the vehicle.
- The doors may lock or unlock if the electronic key is within the effective range and a large amount of water splashes on the door handle, such as in the rain or in a car wash. The doors will automatically be locked after approximately 60 seconds if a door is not opened and closed.
- If the wireless remote control is used to lock the doors when the electronic key is near the vehicle, there is a possibility that the door may not be unlocked by the entry function. (Use the wireless remote control to unlock the doors.)

■Notes for locking the doors

- Touching the door lock sensor while wearing gloves may delay or prevent lock operation. Remove the gloves and touch the lock sensor again.
- When the lock operation is performed using the lock sensor, recognition signals will be shown up to two consecutive times. After this, no recognition signals will be given.
- If the door handle becomes wet while the electronic key is within the effective range, the door may lock and unlock repeatedly. Place the key in a position 6 ft. (2 m) or more separate from the vehicle while the vehicle is being washed. (Take care to ensure that the key is not stolen.)
- If the electronic key is inside the vehicle and a door handle becomes wet during a car wash, a buzzer will sound outside the vehicle. To turn off the alarm, lock all the doors.

- The lock sensor may not work properly if it comes into contact with ice, snow, mud, etc. Clean the lock sensor and attempt to operate it again, or use the lock sensor on the lower part of the door handle.
- Fingernails may scrape against the door during operation of the door handle. Be careful not to injure fingernails or damage the surface of the door.

Notes for the unlocking function

- Gripping the door handle when wearing a glove may not unlock the door.
- A sudden approach to the effective range or door handle may prevent the doors from being unlocked. In this case, return the door handle to the original position and check that the doors unlock before pulling the door handle again.
- If there is another electronic key in the detection area, it may take slightly longer to unlock the doors after the door handle is gripped.

When the vehicle is not driven for extended periods

To prevent theft of the vehicle, do not leave the electronic key within 6 ft. (2 m) of the vehicle.

To operate the system properly

Make sure to carry the electronic key when operating the system. Do not get the electronic key too close to the vehicle when operating the system from the outside of the vehicle.

Depending on the position and holding condition of the electronic key, the key may not be detected correctly and the system may not operate properly. (The alarm may go off accidentally, or the door lock prevention function may not operate.)

If the smart key system does not operate properly

- Locking and unlocking the doors: Use the mechanical key. (→P. 597)
- Starting the engine: →P. 598

■Electronic key battery depletion

- The standard battery life is 1 to 2 years.
- As the electronic key always transmits radio waves, the battery will become depleted even if the electronic key is not used. The following symptoms indicate that the electronic key battery may be depleted. Replace the battery when necessary. (→P. 528)
  - The smart key system or the wireless remote control does not operate.
  - The detection area becomes smaller.
  - The LED indicator on the key surface does not turn on.
- To avoid serious deterioration, do not leave the electronic key within 3 ft. (1 m) of the following electrical appliances that produce a magnetic field:
  - TVs
  - Personal computers
  - Cellular phones, cordless phones and battery chargers
  - Recharging cellular phones or cordless phones
  - Glass top ranges
  - Table lamps

■Precautions when disconnecting the battery

- In some cases, it may not be possible to unlock the doors using the smart key system immediately after the battery has been disconnected. Use the wireless remote control or the mechanical key to lock or unlock the doors.
- The engine may not start on the first attempt after reconnecting the battery but will start normally after the second attempt. This is not a malfunction.
- The “ENGINE START STOP” switch mode is memorized by the vehicle. When the battery is reconnected, the system will return to the mode it was in before the battery was disconnected. Before disconnecting the battery, turn the “ENGINE START STOP” switch off.

If you are unsure what mode the “ENGINE START STOP” switch was in when the battery was disconnected, be especially careful when reconnecting the battery.

■ When the electronic key battery is fully depleted

→P. 528

■ Customization that can be configured at Toyota dealer

Settings (e.g. smart key system) can be changed.
(Customizable features →P. 640)

■ Certification for the smart key system

For vehicles sold in the U.S.A.

FCC ID: NI4TMIMB-2

FCC ID: NI4TMLF8-14

FCC ID: HYQ14ACX

FCC ID: HYQ13CZD

FCC ID: HYQ14ADF

FCC ID: HYQ13CZE

NOTE:
This device complies with part 15 of the FCC Rules. Operation is subject to the following two conditions: (1) This device may not cause harmful interference, and (2) this device must accept any interference received, including interference that may cause undesired operation.

FCC WARNING:
Changes or modifications not expressly approved by the party responsible for compliance could void the user's authority to operate the equipment.

For vehicles sold in Canada

NOTE:
Operation is subject to the following two conditions: (1) this device may not cause interference, and (2) this device must accept any interference, including interference that may cause undesired operation of the device.

CAUTION

■ Caution regarding interference with electronic devices

- People with implanted pacemakers or cardiac defibrillators should keep away from the smart key system antennas. (→P. 36)
  The radio waves may affect the operation of such devices. If necessary, the entry function can be disabled. Ask your Toyota dealer for details, such as the frequency of radio waves and timing of emitting the radio waves. Then, consult your doctor to see if you should disable the entry function.
- Users of any electrical medical device other than implanted pacemakers and implanted cardiac defibrillators should consult the manufacturer of the device for information about its operation under the influence of radio waves.
  Radio waves could have unexpected effects on the operation of such medical devices.

Ask your Toyota dealer for details on disabling the entry function.

Wireless remote control

The wireless remote control can be used to lock and unlock the vehicle.

Vehicles without a smart key system

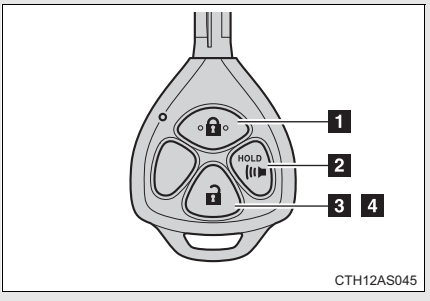

1 Locks all the doors

2 Sounds the alarm (press and hold) (→P. 48)

3 Unlocks all the doors

Pressing the button unlocks the driver's door. Pressing the button again within 3 seconds unlocks the other doors.

4 Opens the windows and moon roof (press and hold)*

*: This setting must be customized at your Toyota dealer.

Vehicles with a smart key system

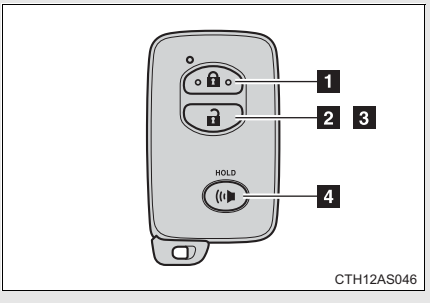

1 Locks all the doors

2 Unlocks all the doors

Pressing the button unlocks the driver's door. Pressing the button again within 3 seconds unlocks the other doors.

3 Opens the windows and moon roof (press and hold)*

4 Sounds the alarm (press and hold) (→P. 48)

*: This setting must be customized at your Toyota dealer.

■ **Operation signals**

A buzzer sounds and the emergency flashers flash to indicate that the doors have been locked/unlocked. (Locked: once; Unlocked: twice)

■ **Door lock buzzer**

If an attempt to lock the doors is made when a door is not fully closed, a buzzer sounds continuously. Fully close the door to stop the buzzer, and lock the vehicle once more.

■ **Panic mode**

Vehicles without a smart key system

When is pressed for longer than about one second, an alarm will sound intermittently and the vehicle lights will flash to deter any person from trying to break into or damage your vehicle.

To stop the alarm, press any button on the wireless remote control.

Vehicles with a smart key system

When is pressed for longer than about one second, an alarm will sound intermittently and the vehicle lights will flash to deter any person from trying to break into or damage your vehicle.

To stop the alarm, press any button on the electronic key.

■ **Security feature**

If a door is not opened within approximately 60 seconds after the vehicle is unlocked, the security feature automatically locks the vehicle again.

■ **Alarm**

Using the wireless remote control to lock the doors will set the alarm system. (→P. 109)

Conditions affecting operation

Vehicles without a smart key system

The wireless remote control function may not operate normally in the following situations:

- Near a TV tower, radio station, electric power plant, airport or other facility that generates strong radio waves
- When carrying a portable radio, cellular phone or other wireless communication devices
- When multiple wireless keys are in the vicinity
- When the wireless key is in contact with, or is covered by, a metallic object
- When a wireless key (that emits radio waves) is being used nearby
- When the wireless key has been left near an electrical appliance such as a personal computer

Vehicles with a smart key system

→P. 41

If the wireless remote control does not operate properly (vehicles with a smart key system)

Locking and unlocking the doors: Use the mechanical key. (→P. 597)

Key battery depletion

Vehicles without a smart key system

If the wireless remote control function does not operate, the battery may be depleted. Replace the battery when necessary. (→P. 528)

Vehicles with a smart key system

→P. 44

When the electronic key battery is fully depleted

→P. 528

When riding in an aircraft

When bringing a key with wireless remote control function onto an aircraft, make sure you do not press any buttons on the key while inside the aircraft cabin. If you are carrying the key in your bag etc, ensure that the buttons are not likely to be pressed accidentally. Pressing a button may cause the key to emit radio waves that could interfere with the operation of the aircraft.

Customization that can be configured at Toyota dealer

Settings (e.g. wireless remote control system) can be changed.
(Customizable features →P. 640)

Certification for wireless remote control

For vehicles sold in the U.S.A.

FCC ID: HYQ14ACX

FCC ID: HYQ13CZD

FCC ID: HYQ14ADF

FCC ID: HYQ13CZE

FCC ID: HYQ12BBY

FCC ID: HYQ13BDC

NOTE:
This device complies with part 15 of the FCC Rules. Operation is subject to the following two conditions: (1) This device may not cause harmful interference, and (2) this device must accept any interference received, including interference that may cause undesired operation.

FCC WARNING:
Changes or modifications not expressly approved by the party responsible for compliance could void the user's authority to operate the equipment.

For vehicles sold in Canada

NOTE:
Operation is subject to the following two conditions: (1) this device may not cause interference, and (2) this device must accept any interference, including interference that may cause undesired operation of the device.

The vehicle can be locked and unlocked using the entry function, wireless remote control, key or door lock switch.

■ Entry function (vehicles with a smart key system)

→P. 33

■ Wireless remote control

→P. 47

■ Key

Turning the key operates the doors as follows:

Vehicles without a smart key system

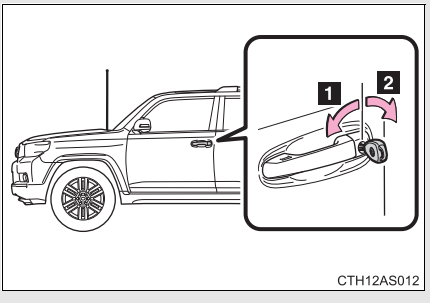

1 Locks all the doors

2 Unlocks all the doors

Turning the key unlocks the driver's door. Turning the key again unlocks the other doors.

Vehicles with a smart key system

The doors can also be locked and unlocked with the mechanical key. (→P. 597)

■ **Door lock switch**

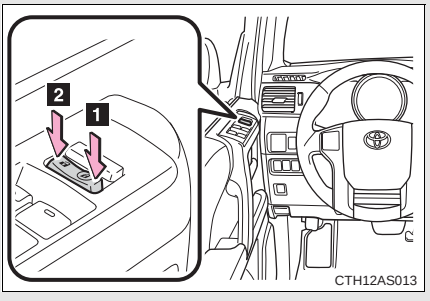

1 Locks all the doors

2 Unlocks all the doors

■ **Inside lock buttons**

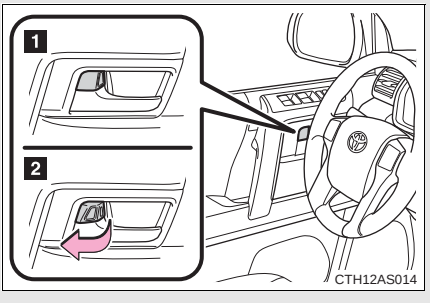

1 Locks the door

2 Unlocks the door

The front doors can be opened by pulling the inside handle even if the lock buttons are in the lock position.

Locking the doors from the outside without a key

STEP 1 Move the inside lock button to the lock position.

STEP 2 Close the door.

Vehicles without a smart key system

The door cannot be locked if either of the front doors is open and the key is in the engine switch.

Vehicles with a smart key system

The door cannot be locked if the “ENGINE START STOP” switch is in ACCESSORY or IGNITION ON mode, or the electronic key is left inside the vehicle.

The key may not be detected correctly and the door may be locked.

Rear door child-protector lock

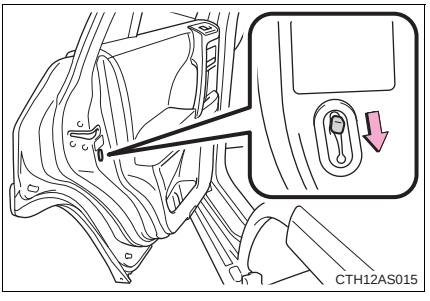

The door cannot be opened from inside the vehicle when the lock is set.

These locks can be set to prevent children from opening the rear doors. Push down on each rear door switch to lock both rear doors.

Automatic door locking and unlocking systems

The following functions can be set or canceled:

Function	Operation
Shift position linked door locking function	Shifting the shift lever out of P locks all the doors.
Shift position linked door unlocking function	Shifting the shift lever to P unlocks all the doors.
Speed linked door locking function	All the doors are locked when the vehicle speed is approximately 12 mph (20 km/h) or higher.
Driver's door linked door unlocking function (vehicles without a smart key system)	All the doors are unlocked when the driver's door is opened within 10 seconds after turning the engine switch to “ACC” or “LOCK”.
Driver's door linked door unlocking function (vehicles with a smart key system)	All the doors are unlocked when the driver's door is opened within 10 seconds after turning the “ENGINE START STOP” switch off.

Setting and canceling the functions

To switch between setting and canceling, follow the procedure below:

STEP 1 **Vehicles without a smart key system**

Close all the doors and turn the engine switch to the “ON” position. (Perform step 2 within 20 seconds.)

Vehicles with a smart key system

Close all the doors and turn the “ENGINE START STOP” switch to IGNITION ON mode. (Perform step 2 within 20 seconds.)

STEP 2

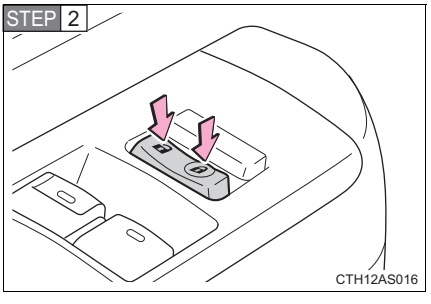

Shift the shift lever to P or N, and press and hold the driver's door lock switch (🔒 or 🔓) for approximately 5 seconds and then release.

The shift lever and switch positions corresponding to the desired function to be set are shown in the following table.

Use the same procedure to cancel the function.

Function	Shift lever position	Driver’s door lock switch position
Shift position linked door locking function	P	🔒
Shift position linked door unlocking function		🔓
Speed linked door locking function	N	🔒
Driver's door linked door unlocking function		🔓

When the setting or canceling operation is complete, all the doors are locked and then unlocked.

Using the mechanical key (vehicles with a smart key system)

The doors can also be locked and unlocked with the mechanical key. (→P. 597)

Customization that can be configured at Toyota dealer

Settings (e.g. door unlocking function) can be changed.
(Customizable features →P. 640)

CAUTION

To prevent an accident

Observe the following precautions while driving the vehicle.
Failure to do so may result in a door opening and an occupant falling out, resulting in death or serious injury.

- Always use a seat belt.
- Always lock all the doors.
- Ensure that all doors are properly closed.
- Do not pull the inside handle of the doors while driving.
  The doors may be opened and the passengers are thrown out of the vehicle and it may result in serious injury or death.

  Be especially careful for the front doors, as the doors may be opened even if the inside lock buttons are in locked position.
- Set the rear door child-protector locks when children are seated in the rear seats.

The back door can be locked/unlocked and opened by the following procedures:

■ Locking and unlocking the back door

Entry function (vehicles with a smart key system)

→P. 34

Wireless remote control

→P. 47

Door lock switch

→P. 52

Keys (vehicles without a smart key system)

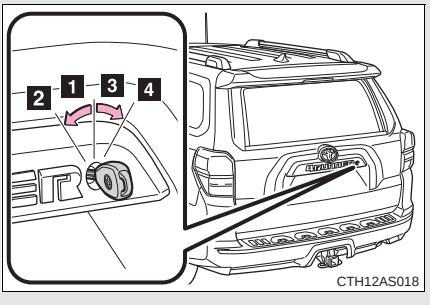

1 Unlocks all the doors

2 Opens the back window (turn and hold) (→P. 94)

3 Locks all the doors

4 Closes the back window (turn and hold) (→P. 94)

■ Opening the back door from outside the vehicle

Back door opener

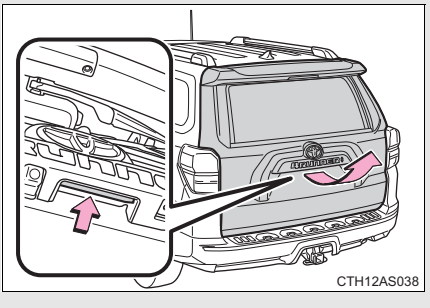

Raise the back door while pushing up the back door opener switch.

Rear step bumper

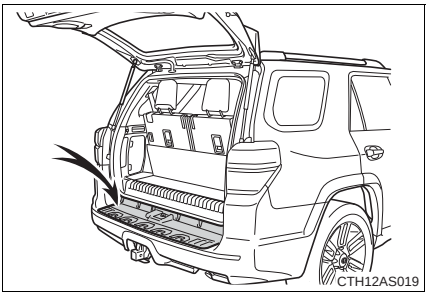

The rear step bumper is intended for rear end protection and easier step-up loading.

■When closing the back door

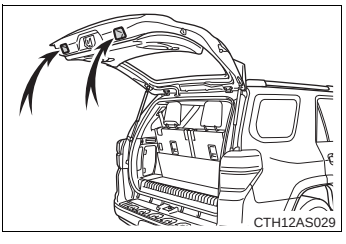

Lower the back door using the back door handle, and make sure to push the back door down from the outside to close it.

■Luggage compartment lights

Each luggage compartment light has the following 3 positions:

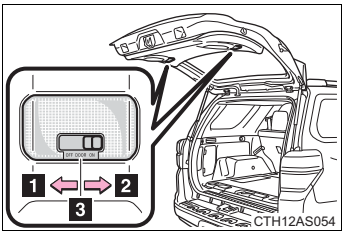

1 Turns the light off

2 Turns the light on

3 Turns the light on/off linked to back door position

If the luggage compartment lights remain on when the back door is not fully closed and the luggage compartment light switch is in the “DOOR” position, the lights will go off automatically after 20 minutes.

■If the back door opener is inoperative or the battery is discharged

→P. 596

CAUTION

■ **Caution while driving**

- Keep the back door closed.
  If the back door is left open, it may hit nearby objects while driving or luggage may be unexpectedly thrown out, causing an accident.
  In addition, exhaust gases may enter the vehicle, causing death or a serious health hazard. Make sure to close the back door before driving.
- Before driving the vehicle, make sure that the back door is fully closed. If the back door is not fully closed, it may open unexpectedly while driving, causing an accident.
- Never let anyone sit in the luggage compartment. In the event of sudden braking or a collision, they are susceptible to death or serious injury.
- Do not get on the rear step bumper.

■ **When children are in the vehicle**

Observe the following precautions.
Failure to do so may result in death or serious injury.

- Do not leave children alone in the luggage compartment.
  If a child is accidentally locked in the luggage compartment, they could have heat exhaustion.
- Do not allow a child to open or close the back door.
  Doing so may cause the back door to operate unexpectedly, or cause the child's hands, head, or neck to be caught by the closing back door, which may result in death or serious injury of the child.

■ **Operating the back door**

Observe the following precautions.
Failure to do so may cause parts of the body to be caught, resulting in serious injury.

- Remove any heavy loads, such as snow and ice, from the back door before opening it. Failure to do so may cause the back door to fall closed again after it is opened.

CAUTION

- When opening or closing the back door, thoroughly check to make sure the surrounding area is safe.
- If anyone is in the vicinity, make sure they are safe and let them know that the back door is about to open or close.
- Use caution when opening or closing the back door in windy weather as it may move abruptly in strong wind.

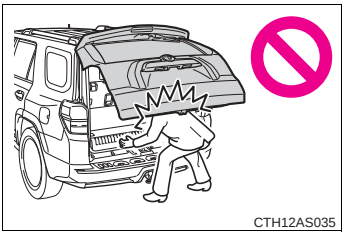
CTH12AS035

- The back door may fall if it is not opened fully. It is more difficult to open or close the back door on an incline than on a level surface, so beware of the back door unexpectedly opening or closing by itself. Make sure that the back door is fully open and secure before using the luggage compartment.

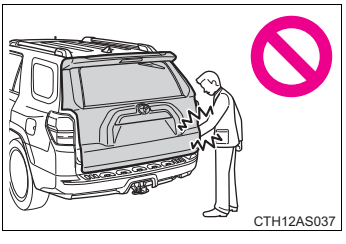
CTH12AS037

- When closing the back door, take extra care to prevent your fingers etc. from being caught.
- When closing the back door, make sure to press it lightly on its outer surface. If the back door handle is used to fully close the back door, it may result in hands or arms being caught.

- Do not pull on the back door damper stay to close the back door, and do not hang on the back door damper stay.
  Doing so may cause hands to be caught or the back door damper stay to break, causing an accident.
- Do not attach any accessories other than genuine Toyota parts to the back door. Such additional weight on the back door may cause the back door to fall closed again after it is opened.

NOTICE

■ **To prevent damage to the back door components**

Do not allow more than one person to get on the rear step bumper at a time.

■ **Back door damper stays**

The back door is equipped with damper stays that hold the back door in place.

Observe the following precautions.
Failure to do so may cause damage to the back door damper stay, resulting in malfunction.

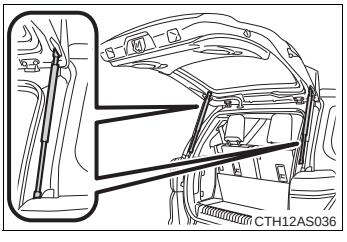

- Do not attach any foreign objects, such as stickers, plastic sheets, or adhesives to the damper stay rod.
- Do not touch the damper stay rod with gloves or other fabric items.
- Do not attach any accessories other than genuine Toyota parts to the back door.
- Do not place your hand on the damper stay or apply lateral forces to it.

Manual seat

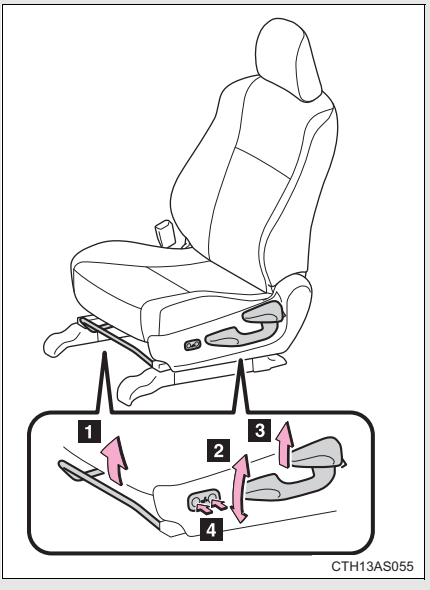

1 Seat position adjustment lever

2 Vertical height adjustment lever (driver's side only)

3 Seatback angle adjustment lever

4 Lumber support adjustment switch (driver's side only)

Power seat

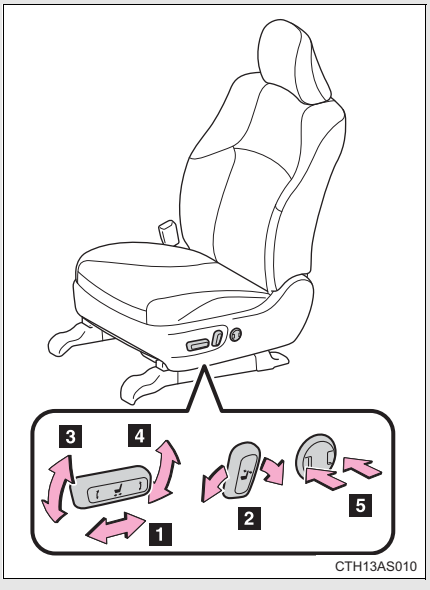

1. Seat position adjustment switch
2. Seatback angle adjustment switch
3. Seat cushion (front) angle adjustment switch (driver's side only)
4. Vertical height adjustment switch (driver's side only)
5. Lumber support adjustment switch (driver's side only)

Active head restraints

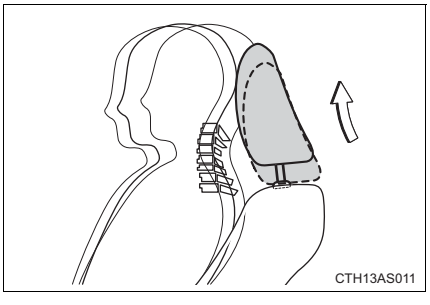

When the occupant's lower back presses against the seatback during a rear-end collision, the head restraint moves slightly forward and upward to help reduce the risk of whiplash to the seat occupant.

The auto away function for exiting the driver seat

If the seat is already close to the rearmost position, the auto away function may not operate when the driver exits the vehicle.

Active head restraints

Even small forces applied to the seatback may cause the head restraint to move. Pushing up a locked head restraint forcibly may appear the head restraint inner structure. These do not indicate problems.

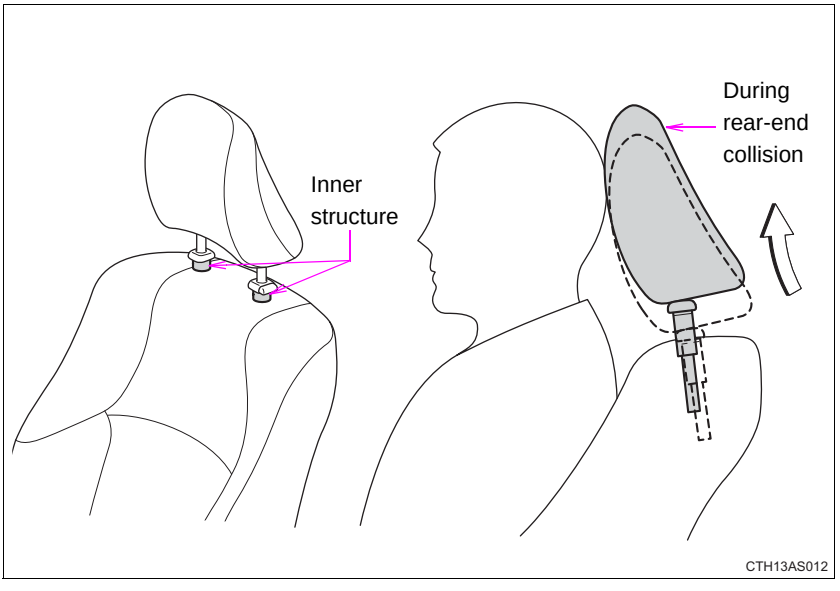

CAUTION

■ **Seat adjustment**

- To reduce the risk of sliding under the lap belt during a collision, do not recline the seat more than necessary.
  If the seat is too reclined, the lap belt may slide past the hips and apply restraint forces directly to the abdomen, or your neck may contact the shoulder belt, increasing the risk of death or serious injury in the event of an accident.
  Adjustments should not be made while driving as the seat may unexpectedly move and cause the driver to lose control of the vehicle.
- After adjusting the seat, make sure that the seat is locked in position.

Vehicles without third row seats

■ **Rear seat**

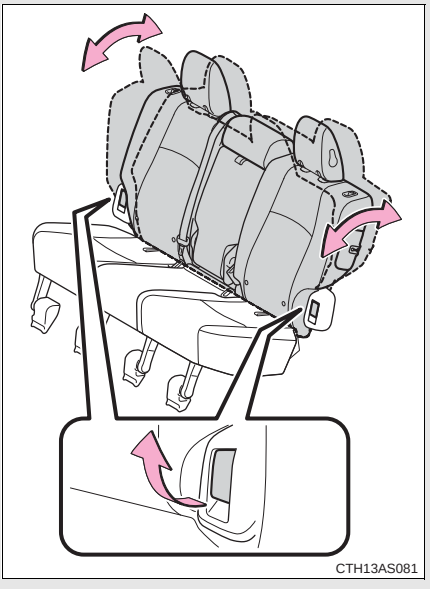

Pull up the seatback angle adjustment lever until the lock is released.

Vehicles with third row seats

■ Second row seats

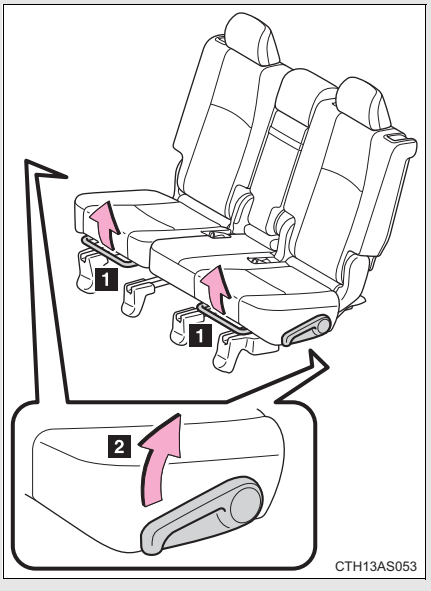

1 Seat position adjustment lever

2 Seatback angle adjustment lever

■ Third row seats

The third row seats do not have a seat adjustment function.

Folding down the rear seats (vehicles without third row seats)

■ Before folding down the rear seats

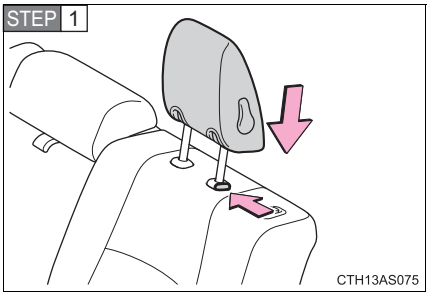

Adjust the head restraints to the downmost position.

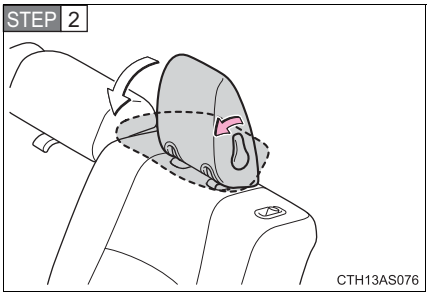

Fold down the head restraints.

When returning the head restraints to their original positions, make sure they are locked securely.

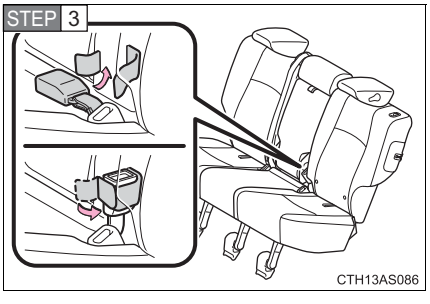

Stow the rear seat belt buckles.

■ Folding down the rear seats

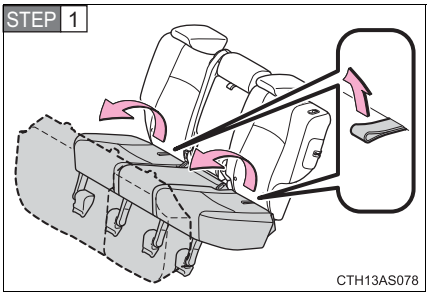

Swing the bottom cushions up by pulling the lock release strap.

When returning the rear seat cushions to their original positions, make sure they are locked securely.

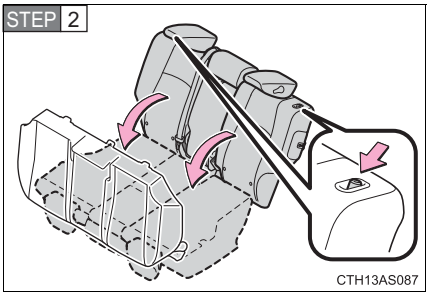

Push the lock release button and fold down the seatbacks.

To return the rear seatbacks to their original positions, lift them up until they lock.

■ Folding down rear center seatback only

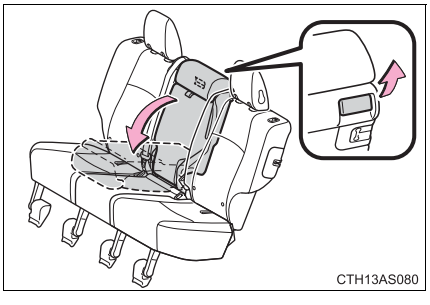

Pull the center seatback angle lever behind the seatback and fold the seatback down.

To return the rear center seatback to its original position, lift it up until it locks.

Folding down the second row seats (vehicles with third row seats)

■ Before folding down the second row seats

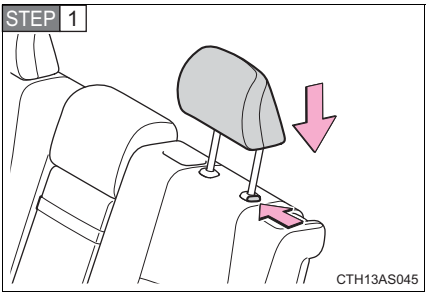

Adjust the head restraints to the downmost position.

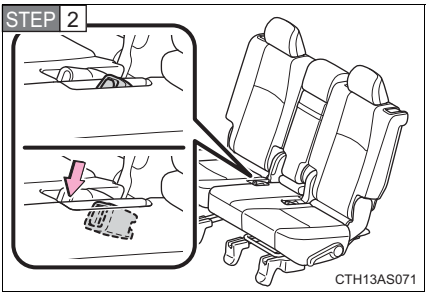

Stow the second row seat belt buckles.

■ Folding down the second row seats

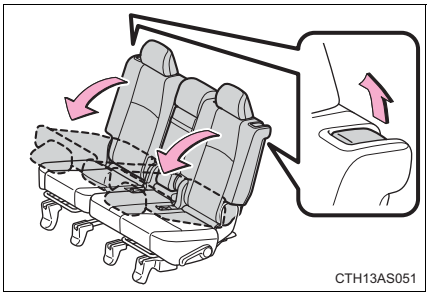

Pull the seatback lock release lever and fold the seatback down.

To return the second row seatbacks to their original positions, lift them up until they lock.

■ Folding down the second row center seatback only

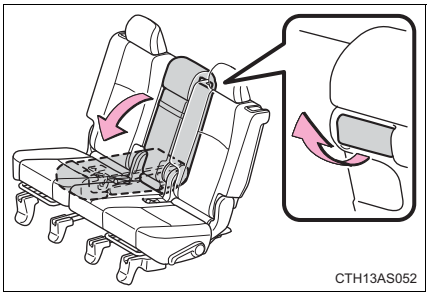

Pull the center seatback angle lever behind the seatback and fold the seatback down.

To return the second row center seatback to its original position, lift it up until it locks.

Moving a second row seat for access to the third row seats (vehicles with third row seats)

■ Getting in the vehicle (right side only)

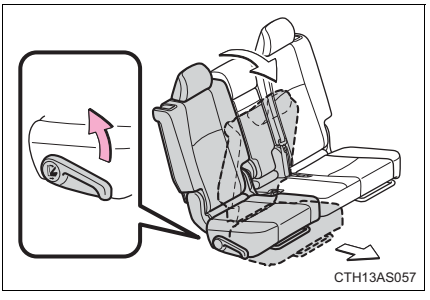

Pull up the lever and fold down the seatback. The seat will slide forward.

Move the seat to the front-most position.

■ Getting out of the vehicle (right side only)

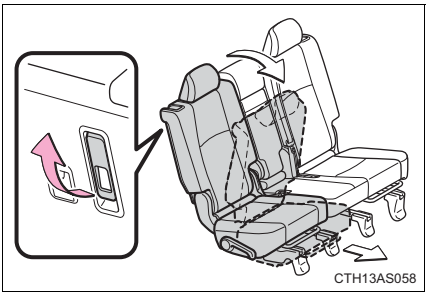

Lift the lever on the back of the seatback and fold down the seatback. The seat will slide forward.

Move the seat to the front-most position.

■ After passengers have entered/exited the vehicle

Lift up the seatback and slide the seat backward until it locks.

Folding down the third row seats (vehicles with third row seats)

■ Before folding down the third row seats

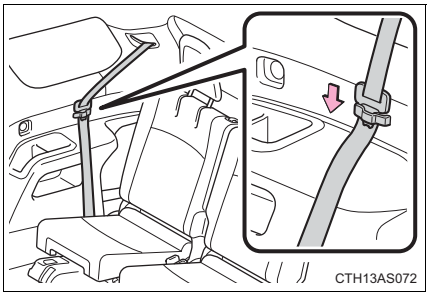

Pass the seat belts through the seat belt hangers and secure the seat belt plates.

This prevents the shoulder belts from being damaged.

Make sure that the seat belts are removed from the hangers before using them.

■ Folding down the third row seats

From inside

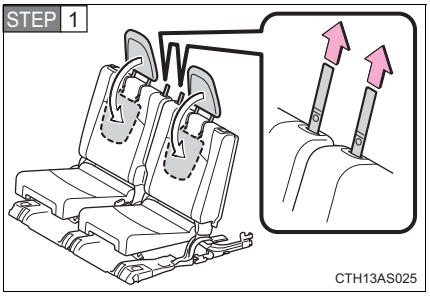

Pull the strap to fold down the head restraint.

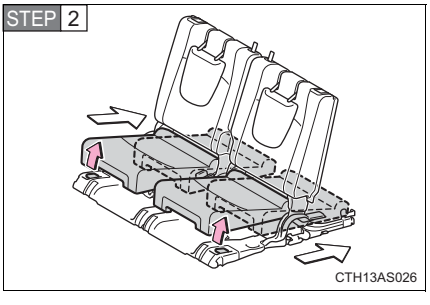

Pull the lever up.

The seat cushion will slide backward.

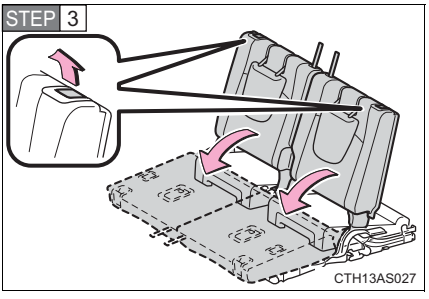

Pull the lever to unlock the seatback and then fold the seatback down.

From outside

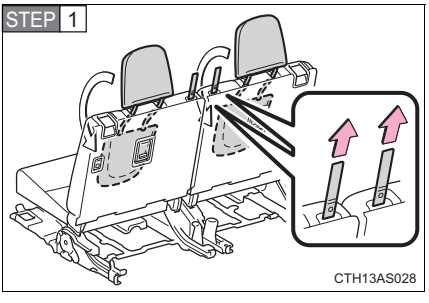

Pull the strap to fold down the head restraint.

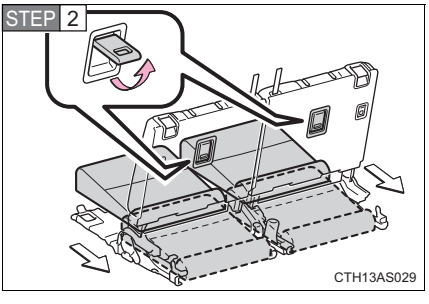

Pull the lever up.

The seat cushion will slide backward and the seatback will be unlocked.

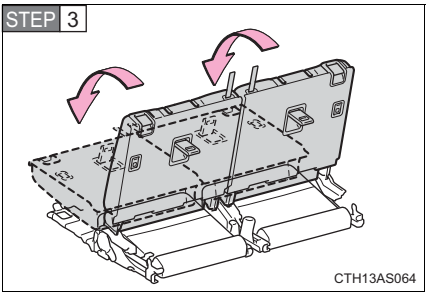

Fold the seatback down.

Returning the third row seats

As the seat cushions cannot be pulled forward from outside, this operation can only be performed from inside.

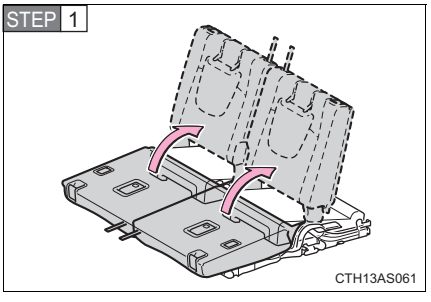

Raise the seatbacks to their original positions.

Make sure they are locked securely.

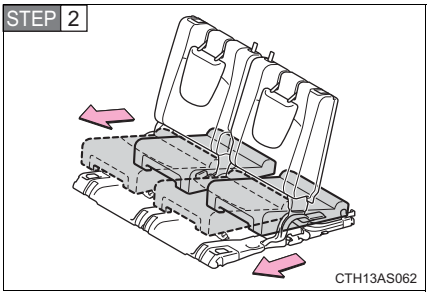

Pull the seat cushions forward.

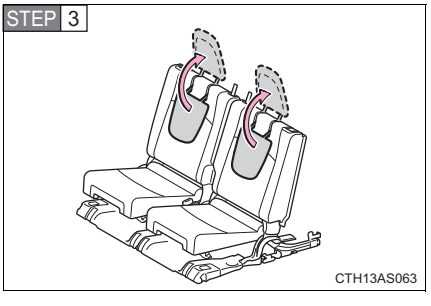

Raise the head restraints.

CAUTION

When folding the rear seatbacks down

Observe the following precautions. Failure to do so may result in death or serious injury.

- Do not fold the seatbacks down while driving.
- Stop the vehicle on level ground, set the parking brake and shift the shift lever to P.
- Do not allow anyone to sit on a folded seatback or in the luggage compartment while driving.
- Do not allow children to enter the luggage compartment.

Seat adjustment

To reduce the risk of sliding under the lap belt during a collision, do not recline the seat more than necessary.
If the seat is too reclined, the lap belt may slide past the hips and apply restraint forces directly to the abdomen, or your neck may contact the shoulder belt, increasing the risk of death or serious injury in the event of an accident.
Adjustments should not be made while driving as the seat may unexpectedly move and cause the driver to lose control of the vehicle.

After returning the rear seatback to the upright position

Observe the following precautions. Failure to do so may result in death or serious injury.

- Make sure the seatback is securely locked by pushing it forward and rearward on the top.
- Check that the seat belts are not twisted or caught in the seatback.

NOTICE

Stowing the seat belts

The seat belts and the buckles must be stowed before you fold down the rear seatbacks.

Head restraints

Head restraints are provided for all seats.

■ Adjusting the head restraints

Front and second seats

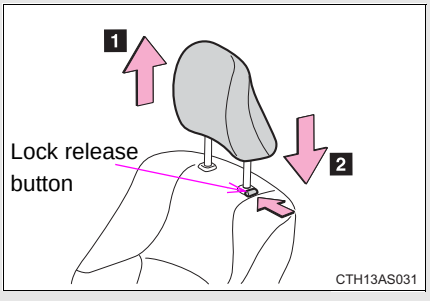

1 Up

Pull the head restraints up.

2 Down

Push the head restraint down while pushing the lock release button.

■ Folding the head restraints

Second seats (vehicles without third row seats)

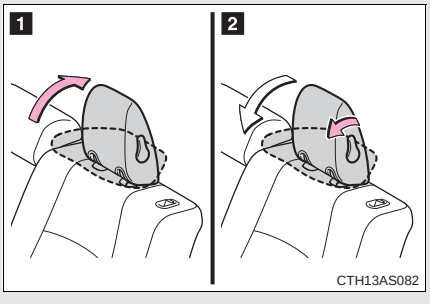

1 To use

2 To fold

Third seats (vehicles with third row seats)

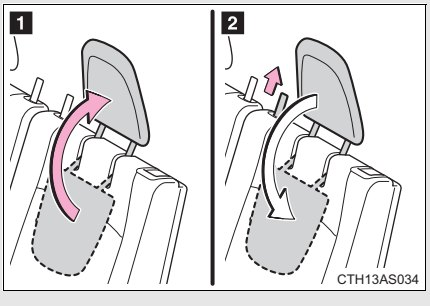

1 To use

2 To fold

Removing the head restraints (except third row seats)

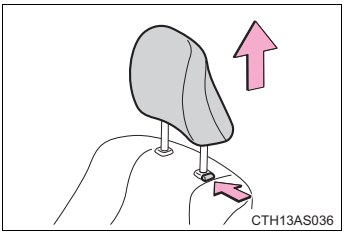

Pull the head restraint up while pressing the lock release button.

Installing the head restraints (except third row seats)

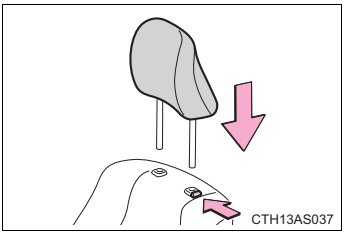

Align the head restraint with the installation holes and push it down to the lock position.

Press and hold the lock release button when lowering the head restraint.

Adjusting the height of the head restraints

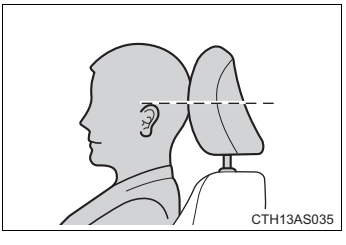

Make sure that the head restraints are adjusted so that the center of the head restraint is closest to the top of your ears.

Adjusting the second center seat head restraint

Always raise the head restraint one level from the stowed position when using.

CAUTION

Head restraint precautions

Observe the following precautions regarding the head restraints. Failure to do so may result in death or serious injury.

- Use the head restraints designed for each respective seat.
- Adjust the head restraints to the correct position at all times.
- After adjusting the head restraints, push down on them and make sure they are locked in position.
- Do not drive with the head restraints removed.

Make sure that all occupants are wearing their seat belts before driving the vehicle.

Correct use of the seat belts

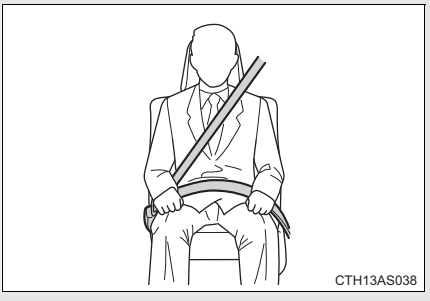

- Extend the shoulder belt so that it comes fully over the shoulder, but does not come into contact with the neck or slide off the shoulder.
- Position the lap belt as low as possible over the hips.
- Adjust the position of the seatback. Sit up straight and well back in the seat.
- Do not twist the seat belt.

Fastening and releasing the seat belt

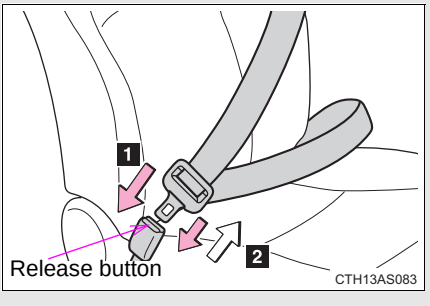

1 To fasten the seat belt, push the plate into the buckle until a click sound is heard.

2 To release the seat belt, press the release button.

■ Adjusting the seat belt shoulder anchor height (front seats)

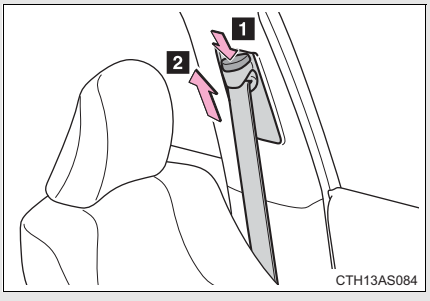

1 Push the seat belt shoulder anchor down while pressing the release button.

2 Push the seat belt shoulder anchor up.

Move the height adjuster up and down as needed until you hear a click.

Seat belt pretensioners (front seats)

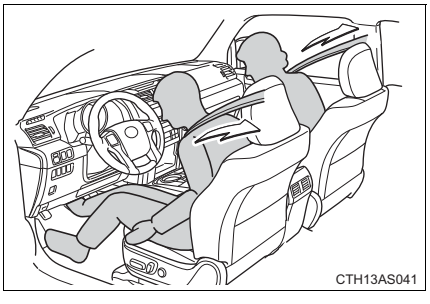

The pretensioner helps the seat belt to quickly restrain the occupant by retracting the seat belt when the vehicle is subjected to certain types of severe frontal and side collision or a vehicle rollover.

The pretensioner may not activate in the event of a minor frontal or side impact or a rear impact.

Emergency locking retractor (ELR)

The retractor will lock the belt during a sudden stop or on impact. It may also lock if you lean forward too quickly. A slow, easy motion will allow the belt to extend so that you can move around fully.

Automatic locking retractor (ALR)

When a passenger's shoulder belt is completely extended and then retracted even slightly, the belt is locked in that position and cannot be extended. This feature is used to hold the child restraint system (CRS) firmly. To free the belt again, fully retract the belt and then pull the belt out once more. (→P. 140)

Pregnant women

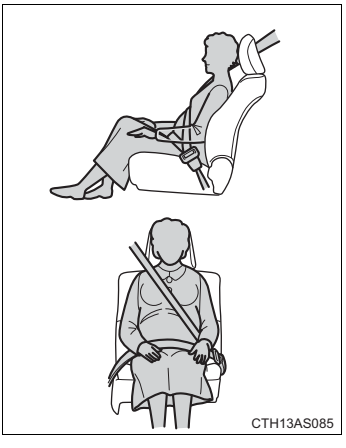

Obtain medical advice and wear the seat belt in the proper way. (→P. 79)

Women who are pregnant should position the lap belt as low as possible over the hips in the same manner as other occupants. Extend the shoulder belt completely over the shoulder and position the belt across the chest. Avoid belt contact over the rounding of the abdominal area.

If the seat belt is not worn properly, not only the pregnant woman, but also the fetus could suffer death or serious injury as a result of sudden braking or a collision.

People suffering illness

Obtain medical advice and wear the seat belt in the proper way. (→P. 79)

■ Child seat belt usage

The seat belts of your vehicle were principally designed for persons of adult size.

- Use a child restraint system appropriate for the child, until the child becomes large enough to properly wear the vehicle's seat belt. (→P. 136)
- When the child becomes large enough to properly wear the vehicle's seat belt, follow the instructions on P. 79 regarding seat belt usage.

■ Replacing the belt after the pretensioner has been activated

If the vehicle is involved in multiple collisions, the pretensioner will activate for the first collision, but will not activate for the second or subsequent collisions.

■ Seat belt extender

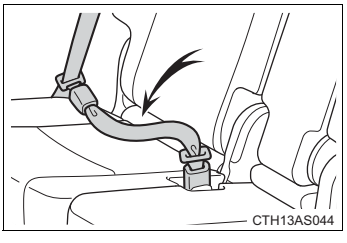

If your seat belts cannot be fastened securely because they are not long enough, a personalized seat belt extender is available from your Toyota dealer free of charge.

CAUTION

■ Wearing a seat belt

Observe the following precautions to reduce the risk of injury in the event of sudden braking, sudden swerving or an accident.
Failure to do so may cause death or serious injury.

- Ensure that all passengers wear a seat belt.
- Always wear a seat belt properly.
- Each seat belt should be used by one person only. Do not use a seat belt for more than one person at once, including children.
- Toyota recommends that children be seated in the rear seat and always use a seat belt and/or an appropriate child restraint system.
- To achieve a proper seating position, do not recline the seat more than necessary. The seat belt is most effective when the occupants are sitting up straight and well back in the seats.
- Do not wear the shoulder belt under your arm.
- Always wear your seat belt low and snug across your hips.

■ Seat belt pretensioners

- Do not place anything, such as a cushion, on the front passenger's seat. Doing so will disperse the passenger's weight, which prevents the sensor from detecting the passenger's weight properly. As a result, the seat belt pretensioner for the front passenger's seat may not activate in the event of a collision.
- If the pretensioner has activated, the SRS warning light will come on. In that case, the seat belt cannot be used again and must be replaced at your Toyota dealer.

■ Adjustable shoulder anchor

Always make sure the shoulder belt is positioned across the center of your shoulder. The belt should be kept away from your neck, but not falling off your shoulder. Failure to do so could reduce the amount of protection in an accident and cause death or serious injuries in the event of a sudden stop, sudden swerve or accident. (→P. 80)

CAUTION

■ **Child restraint lock function belt precaution**

Do not allow children to play with the child restraint lock function belt. If the belt becomes twisted around a child's neck, it will not be possible to pull the belt out leading to choking or other serious injuries that could result in death. If this occurs and the buckle cannot be unfastened, scissors should be used to cut the belt.

■ **Seat belt damage and wear**

- Do not damage the seat belts by allowing the belt, plate, or buckle to be jammed in the door.
- Inspect the seat belt system periodically. Check for cuts, fraying, and loose parts. Do not use a damaged seat belt until it is replaced. Damaged seat belts cannot protect an occupant from death or serious injury.
- Ensure that the belt and plate are locked and the belt is not twisted.
  If the seat belt does not function correctly, immediately contact your Toyota dealer.
- Replace the seat assembly, including the belts, if your vehicle has been involved in a serious accident, even if there's no obvious damage.
- Do not attempt to install, remove, modify, disassemble or dispose of the seat belts. Have any necessary repairs carried out by your Toyota dealer. Inappropriate handling of the pretensioner may prevent it from operating properly, resulting in death or serious injury.

■ **Using a seat belt extender**

- Do not wear the seat belt extender if you can fasten the seat belt without the extender.
- Do not use the seat belt extender when installing a child restraint system because the belt will not securely hold the child restraint system, increasing the risk of death or serious injury in the event of an accident.
- The personalized extender may not be safe on another vehicle, when used by another person, or at a different seating position other than the one originally intended.

NOTICE

When using a seat belt extender

When releasing the seat belt, press on the buckle release button on the extender, not on the seat belt.
This helps prevent damage to the vehicle interior and the extender itself.

Steering wheel

The steering wheel can be adjusted to a comfortable position.

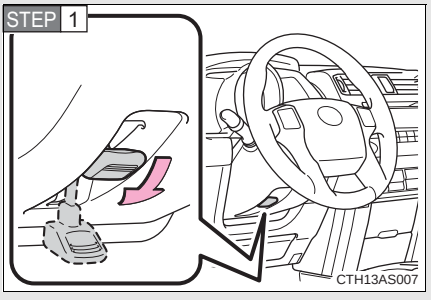

Hold the steering wheel and push the lever down.

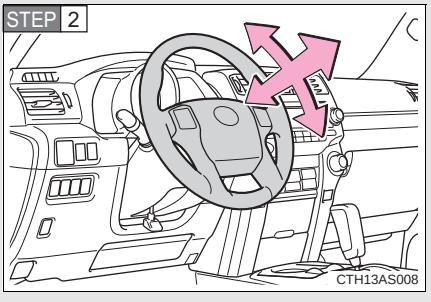

Adjust to the ideal position by moving the steering wheel horizontally and vertically.

After adjustment, pull the lever up to secure the steering wheel.

CAUTION

■ Caution while driving

Do not adjust the steering wheel while driving.
Doing so may cause the driver to mishandle the vehicle and cause an accident, resulting in death or serious injury.

■ After adjusting the steering wheel

Make sure that the steering wheel is securely locked.
Otherwise, the steering wheel may move suddenly, possibly causing an accident, and resulting in death or serious injury.

Inside rear view mirror

Glare from the headlights of vehicles behind can be reduced by using the following functions:

Manual anti-glare inside rear view mirror (if equipped)

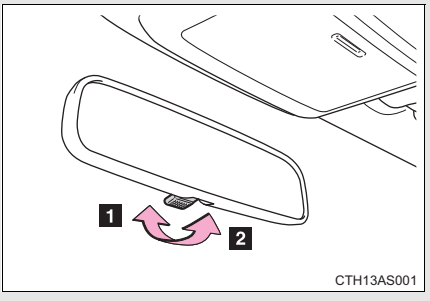

1 Normal position

2 Anti-glare position

Auto anti-glare inside rear view mirror (if equipped)

In automatic mode, sensors are used to detect the headlights of vehicles behind and the reflected light is automatically reduced.

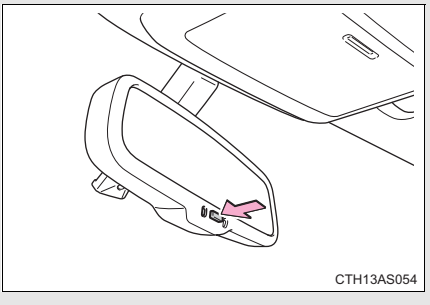

Turns automatic mode on/off

The indicator comes on when automatic mode is turned on.

Vehicles without a smart key system

The mirror will revert to the automatic mode each time the engine switch is turned to the “ON” position.

Vehicles with a smart key system

The mirror will revert to the automatic mode each time the “ENGINE START STOP” switch is turned to IGNITION ON mode.

Adjusting the height of rear view mirror

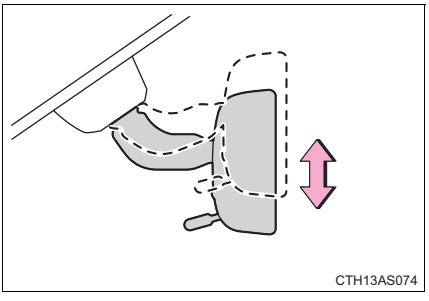

Adjust the height of the rear view mirror by moving it up and down.

To prevent sensor error (vehicles with auto anti-glare inside rear view mirror)

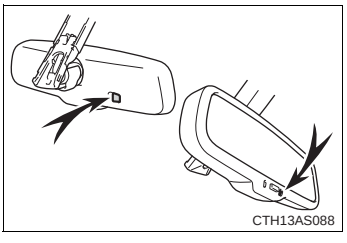

To ensure that the sensors operate properly, do not touch or cover them.

CAUTION

Caution while driving

Do not adjust the position of the mirror while driving.
Doing so may lead to mishandling of the vehicle and cause an accident, resulting in death or serious injury.

Outside rear view mirrors

Mirror angle can be adjusted using the switch.

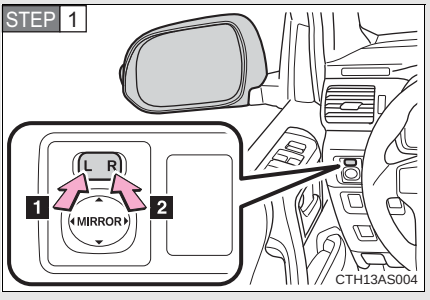

To select a mirror to adjust, press the switch.

1 Left
2 Right

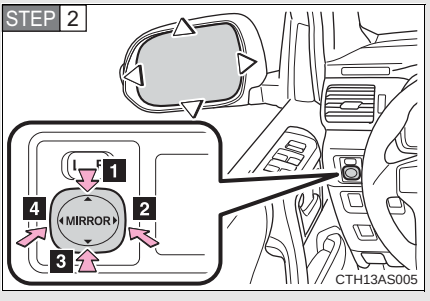

To adjust the mirror, press the switch.

1 Up
2 Right
3 Down
4 Left

Folding the mirrors

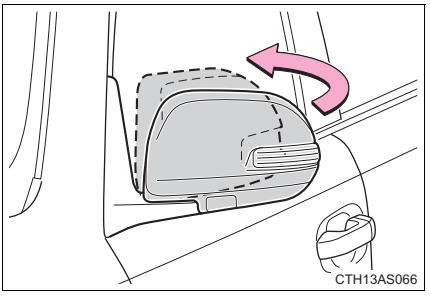

Push the mirror back in the direction of the vehicle's rear.

Mirror angle can be adjusted when

Vehicles without a smart key system
The engine switch is in the “ACC” or “ON” position.

Vehicles with a smart key system
The “ENGINE START STOP” switch is in ACCESSORY or IGNITION ON mode.

When the mirrors are fogged up

Turn on the mirror defoggers to defog the mirrors. (→P. 310)

CAUTION

When driving the vehicle

Observe the following precautions while driving.
Failure to do so may result in loss of control of the vehicle and cause an accident, resulting in death or serious injury.

- Do not adjust the mirrors while driving.
- Do not drive with the mirrors folded.
- Both the driver and passenger side mirrors must be extended and properly adjusted before driving.

When a mirror is moving

To avoid personal injury and mirror malfunction, be careful not to get your hand caught by the moving mirror.

When the mirror defoggers are operating

Do not touch the rear view mirror surfaces, as they can become very hot and burn you.

Power windows

The power windows can be opened and closed using the switches.

Operating the switch moves the windows as follows:

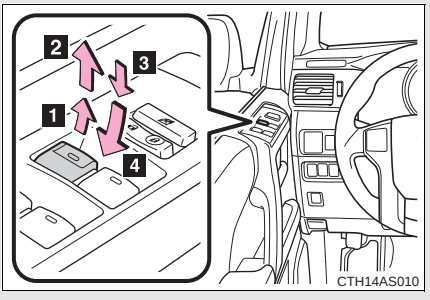

1 Closing

2 One-touch closing*

3 Opening

4 One-touch opening*

*: Pushing the switch in the opposite direction will stop window travel partway.

Window lock switch

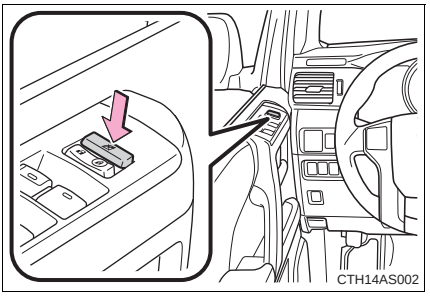

Press the switch down to lock the passenger window switches and back window switch.

Use this switch to prevent children from accidentally opening or closing a passenger window and back window.

■ The power windows can be operated when

Vehicles without a smart key system
The engine switch is in the “ON” position.

Vehicles with a smart key system
The “ENGINE START STOP” switch is in IGNITION ON mode.

■ Operating the power windows after turning the engine off

Vehicles without a smart key system
The power windows can be operated for approximately 45 seconds even after the engine switch is turned to the “ACC” or “LOCK” position. They cannot, however, be operated once either front door is opened.

Vehicles with a smart key system
The power windows can be operated for approximately 45 seconds even after the “ENGINE START STOP” switch is turned to ACCESSORY mode or turned off. They cannot, however, be operated once either front door is opened.

■ Jam protection function

If an object becomes caught between the window and the window frame, window travel is stopped and the window is opened slightly.

■ Customization that can be configured at Toyota dealer

Settings (e.g. linked door lock operation) can be changed.
(Customizable features →P. 640)

CAUTION

■ Closing the windows

Observe the following precautions.
Failure to do so may result in death or serious injury.

- Check to make sure that all passengers do not have any part of their body in a position where it could be caught when a window is being operated.
- Do not allow children to operate the power windows.
  Closing a power window on someone can cause serious injury, and in some instances, even death.

■ Jam protection function

- Never use any part of your body to intentionally activate the jam protection function.
- The jam protection function may not work if something gets caught just before the window fully closes.

Power back window

The power back window can be opened and closed using the switch or key.

From inside the vehicle

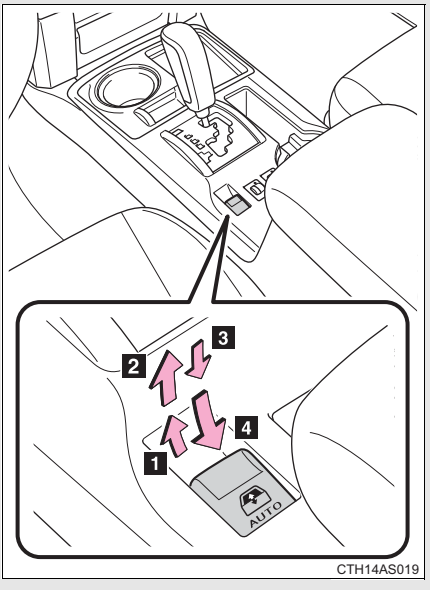

1 Closing

2 One-touch closing*

3 Opening

4 One-touch opening*

*: Pressing the switch in the opposite direction will stop window travel partway.

From outside the vehicle (vehicles without a smart key system)

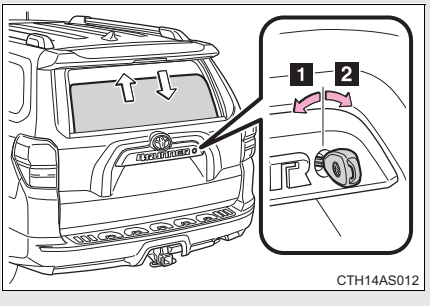

1 Opening

2 Closing

Turn the key fully and hold it.

From outside the vehicle (vehicles with a smart key system)

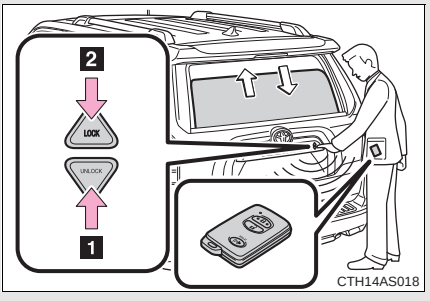

1 Opening (push and hold)

2 Closing (push and hold)

This operation can only be performed when the electronic key is within the detection range.

■ **The power back window can be operated from inside the vehicle when**

Vehicles without a smart key system
The engine switch is in the “ON” position.

Vehicles with a smart key system
The “ENGINE START STOP” switch is in IGNITION ON mode.

- The power back window can be opened when the rear window wiper is working, but the wiper stops working until the window is closed again.
  If the power back window is not fully closed, the rear window wiper, washer, and defogger will not work.
- If the back door is not fully closed, the power back window cannot be opened using the switch located in the cabin. (It is still possible to close the window.)
- If the back door is opened while the power back window is opening or closing, window operation will stop.

■ **The power back window can be operated from outside the vehicle when (vehicles with a smart key system)**

- The “ENGINE START STOP” switch is off.
- The back door is closed.

Operating the power back window from inside the vehicle after turning the engine off

Vehicles without a smart key system

The power back window can be operated for approximately 45 seconds even after the engine switch is turned to the “ACC” or “LOCK” position. It cannot, however, be operated once either front door is opened.

Vehicles with a smart key system

The power back window can be operated for approximately 45 seconds even after the “ENGINE START STOP” switch is turned to ACCESSORY mode or turned off. It cannot, however, be operated once either front door is opened.

Jam protection function

If an object becomes caught between the window and the window frame, window travel is stopped and the window is opened slightly.

Customization that can be configured at Toyota dealer

Settings (e.g. linked operation) can be changed.
(Customizable features →P. 640)

CAUTION

■ Caution while driving

Keep the back door and back window closed while driving. If the back door or the back window is left open, the back door may hit nearby objects while driving or luggage may be unexpectedly thrown out, causing an accident.
In addition, exhaust gases may enter the vehicle, causing death or a serious health hazard. Make sure to close the back door and back window before driving.

■ Closing the power back window

Observe the following precautions.
Failure to do so may result in death or serious injury.

- Check to make sure that all passengers do not have any part of their body in a position where it could be caught when a window is being operated.
- Do not allow children to operate the power back window.
  Closing a power back window on someone can cause serious injury, and in some instances, even death.

■ Jam protection function

- Never use any part of your body to intentionally activate the jam protection function.
- The jam protection function may not work if something gets caught just before the window fully closes.

Moon roof*

Use the overhead switches to open and close the moon roof and tilt it up and down.

■ Opening and closing

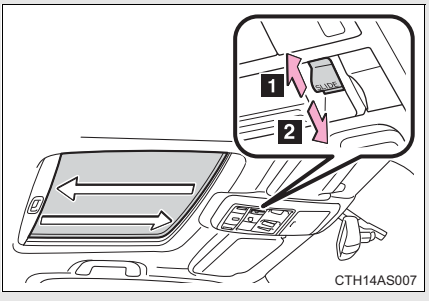

1 Opens the moon roof*

2 Closes the moon roof*

*: Lightly press the switch in either direction to stop the moon roof partway.

■ Tilting up and down

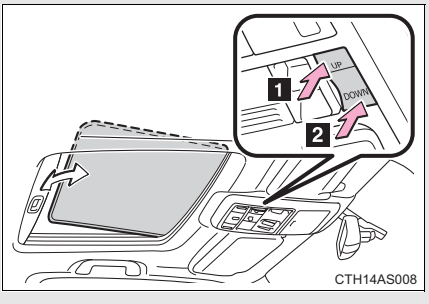

1 Tilts the moon roof up*

2 Tilts the moon roof down*

*: Lightly press either of the moon roof switches to stop the moon roof partway.

*: If equipped

The moon roof can be operated when

Vehicles without a smart key system
The engine switch is in the “ON” position.

Vehicles with a smart key system
The “ENGINE START STOP” switch is in IGNITION ON mode.

Operating the moon roof after turning the engine off

Vehicles without a smart key system
The moon roof can be operated for approximately 45 seconds even after the engine switch is turned to the “ACC” or “LOCK” position. It cannot, however, be operated once either front door is opened.

Vehicles with a smart key system
The moon roof can be operated for approximately 45 seconds even after the “ENGINE START STOP” switch is turned to ACCESSORY mode or turned off. It cannot, however, be operated once either front door is opened.

Jam protection function

If an object is detected between the moon roof and the frame while the moon roof is closing or tilting down, travel is stopped and the moon roof opens slightly.

Sunshade

The sunshade can be opened and closed manually. However, the sunshade will open automatically when the moon roof is opened.

■ When the moon roof does not close normally

Perform the following procedure:

● If the moon roof closes but then re-opens slightly

STEP 1 Stop the vehicle.

STEP 2 Press and hold the “SLIDE (open/close)” switch in the close position.*1
The moon roof will close, reopen and pause for approximately 10 seconds.*2 Then it will close again, tilt up and pause for approximately 1 second. Finally, it will tilt down, open and close.

STEP 3 Check to make sure that the moon roof is completely closed and then release the switch.

● If the moon roof tilts down but then tilts back up

STEP 1 Stop the vehicle.

STEP 2 Press and hold the “UP” switch*1 until the moon roof moves into the tilt up position and stops.

STEP 3 Release the “UP” switch once and then press and hold the “UP” switch again.*1

The moon roof will pause for approximately 10 seconds in the tilt up position.*2 Then it will adjust slightly and pause for approximately 1 second. Finally, it will tilt down, open and close.

STEP 4 Check to make sure that the moon roof is completely closed and then release the switch.

*1:If the switch is released at the incorrect time, the procedure will have to be performed again from the beginning.

*2:If the switch is released after the above mentioned 10 second pause, automatic operation will be disabled. In that case, press and hold the “UP” or “DOWN” switch, and the moon roof will tilt up and pause for approximately 1 second. Then it will tilt down, open and close. Check to make sure that the moon roof is completely closed and then release the switch.

If the moon roof does not fully close even after performing the above procedure correctly, have the vehicle inspected by your Toyota dealer.

Moon roof open reminder function

Vehicles without a smart key system
An alarm will sound when the driver's door is opened with the moon roof not fully closed and the engine switch off.

Vehicles with a smart key system
An alarm will sound when the driver's door is opened with the moon roof not fully closed and the "ENGINE START STOP" switch off.

Customization that can be configured at Toyota dealer

Settings (e.g. linked door lock operation) can be changed.
(Customizable features →P. 640)

CAUTION

Opening the moon roof

Observe the following precautions.
Failure to do so may cause death or serious injury.

- Do not allow any passengers to put their hands or heads outside the vehicle while it is moving.
- Do not sit on top of the moon roof.

Closing the moon roof

Observe the following precautions.
Failure to do so may result in death or serious injury.

- Check to make sure that all passengers do not have any part of their body in a position where it could be caught when the moon roof is being operated.
- Do not allow children to operate the moon roof.
  Closing the moon roof on someone can cause death or serious injury.

Jam protection function

- Never use any part of your body to intentionally activate the jam protection function.
- The jam protection function may not work if something gets caught just before the moon roof fully closes.

Opening the fuel tank cap

Perform the following steps to open the fuel tank cap:

■ Before refueling the vehicle

Vehicles without a smart key system

Turn the engine switch off and ensure that all the doors and windows are closed.

Vehicles with a smart key system

Turn the “ENGINE START STOP” switch off and ensure that all the doors and windows are closed.

■ Opening the fuel tank cap

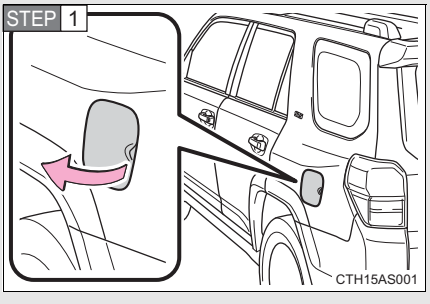

Open the fuel filler door.

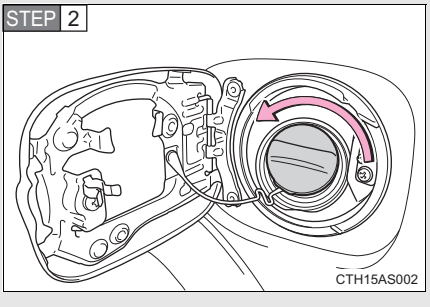

Turn the fuel tank cap slowly to open.

STEP 3

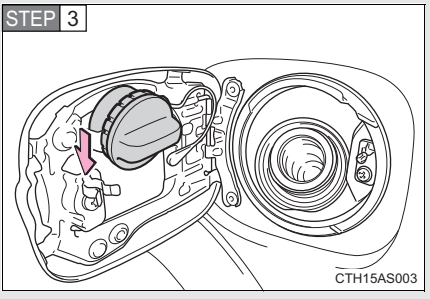

Hang the fuel tank cap on the back of the fuel filler door.

Closing the fuel tank cap

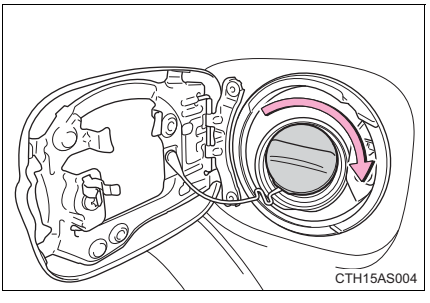

After refueling, turn the fuel tank cap until you hear a click. Once the cap is released, it will turn slightly in the opposite direction.

CAUTION

When refueling the vehicle

Observe the following precautions while refueling the vehicle. Failure to do so may result in death or serious injury.

- After exiting the vehicle and before opening the fuel door, touch an unpainted metal surface to discharge any static electricity. It is important to discharge static electricity before refueling because sparks resulting from static electricity can cause fuel vapors to ignite while refueling.
- Always hold the grips on the fuel tank cap and turn it slowly to remove it.
  A whooshing sound may be heard when the fuel tank cap is loosened. Wait until the sound cannot be heard before fully removing the cap. In hot weather, pressurized fuel may spray out the filler neck and cause injury.
- Do not allow anyone that has not discharged static electricity from their body to come close to an open fuel tank.
- Do not inhale vaporized fuel.
  Fuel contains substances that are harmful if inhaled.
- Do not smoke while refueling the vehicle.
  Doing so may cause the fuel to ignite and cause a fire.
- Do not return to the vehicle or touch any person or object that is statically charged.
  This may cause static electricity to build up, resulting in a possible ignition hazard.

When refueling

Securely insert the fuel nozzle into the fuel filler neck. If fuel is added with the nozzle slightly lifted away from the fuel filler neck, the automatic shut off function may not operate, resulting in fuel overflowing from the tank.

When replacing the fuel cap

Do not use anything but a genuine Toyota fuel tank cap designed for your vehicle. Doing so may cause a fire or other incident which may result in death or serious injury.

NOTICE

Refueling

Do not spill fuel during refueling.
Doing so may damage the vehicle, such as causing the emission control system to operate abnormally or damaging fuel system components or the vehicle's painted surface.

Engine immobilizer system

The vehicle's keys have built-in transponder chips that prevent the engine from starting if a key has not been previously registered in the vehicle's on-board computer.

Never leave the keys inside the vehicle when you leave the vehicle.

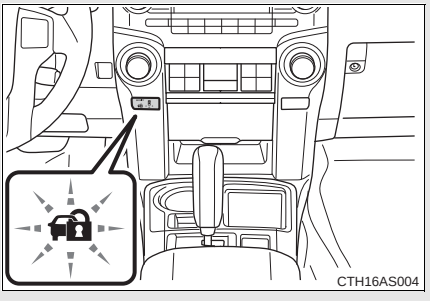

Vehicles without a smart key system

The indicator light flashes after the key has been removed from the engine switch to indicate that the system is operating.

The indicator light stops flashing after the registered key has been inserted into the engine switch to indicate that the system has been canceled.

Vehicles with a smart key system

The indicator light flashes after the "ENGINE START STOP" switch has been turned off to indicate that the system is operating.

The indicator light stops flashing after the "ENGINE START STOP" switch has been turned to ACCESSORY or IGNITION ON mode to indicate that the system has been canceled.

System maintenance

The vehicle has a maintenance-free type engine immobilizer system.

Conditions that may cause the system to malfunction

- If the grip portion of the key is in contact with a metallic object
- If the key is in close proximity to or touching a key to the security system (key with a built-in transponder chip) of another vehicle

Certifications for the engine immobilizer system (vehicles without a smart key system)

- For vehicles sold in the U.S.A.

FCC ID: MOZRI-33BTY

This device complies with Part 15 of the FCC Rules. Operation is subject to the following two conditions: (1) this device may not cause harmful interference, and (2) this device must accept any interference received, including interference that may cause undesired operation.

FCC WARNING:
Changes or modifications not expressly approved by the party responsible for compliance could void the user's authority to operate the equipment.

- For vehicles sold in Canada

Operation is subject to the following two conditions: (1) this device may not cause interference, and (2) this device must accept any interference, including interference that may cause undesired operation of the device.

CAUTION

Certifications for the immobilizer system

Changes or modifications not expressly approved by the party responsible for compliance could void the user's authority to operate the equipment.

NOTICE

To ensure the system operates correctly

Do not modify or remove the system. If modified or removed, the proper operation of the system cannot be guaranteed.

Alarm*

The system sounds the alarm and flashes the lights when forced entry is detected.

Triggering of the alarm

The alarm is triggered in the following situations when the alarm is set:

- A locked door is unlocked or opened in any way other than using the entry function, wireless remote control or mechanical key. (The doors will lock again automatically.)
- The hood is opened.

Setting the alarm system

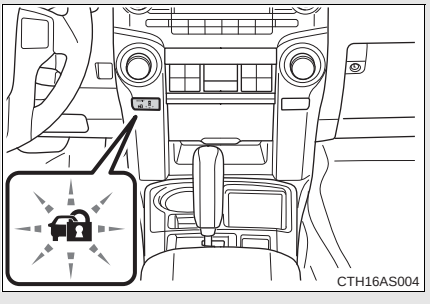

Close the doors and hood, and lock all the doors. The system will be set automatically after 30 seconds.

The indicator light changes from being on to flashing when the system is set.

Deactivating or stopping the alarm

Do one of the following to deactivate or stop the alarms:

- Unlock the doors.
- Start the engine. (The alarm will be deactivated or stopped after a few seconds.)

*: If equipped

System maintenance

The vehicle has a maintenance-free type alarm system.

Items to check before locking the vehicle

To prevent unexpected triggering of the alarm and vehicle theft, make sure of the following:

- Nobody is in the vehicle.
- The windows and moon roof are closed before the alarm is set.
- No valuables or other personal items are left in the vehicle.

Triggering of the alarm

The alarm may be triggered in the following situations:
(Stopping the alarm deactivates the alarm system.)

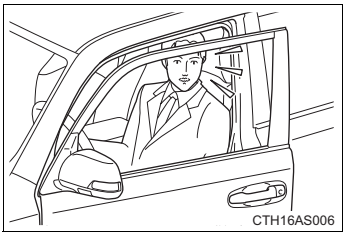

- A person inside the vehicle opens a door or the hood.

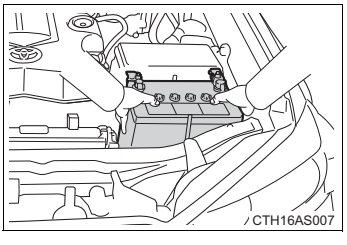

- The battery is recharged or replaced when the vehicle is locked.

Alarm-operated door lock

- When the alarm is operating, the doors are locked automatically to prevent intruders.
- Do not leave the key inside the vehicle when the alarm is operating, and make sure the key is not inside the vehicle when recharging or replacing the battery.

NOTICE

To ensure the system operates correctly

Do not modify or remove the system. If modified or removed, the proper operation of the system cannot be guaranteed.

Theft prevention labels (for U. S. A.)

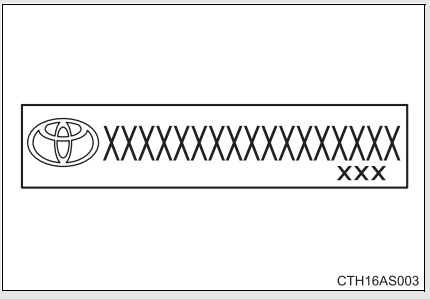

These labels are attached to the vehicle to reduce vehicle theft by facilitating the tracing and recovery of parts from stolen vehicles. Do not remove under penalty of law.

Correct driving posture

Drive with a good posture as follows:

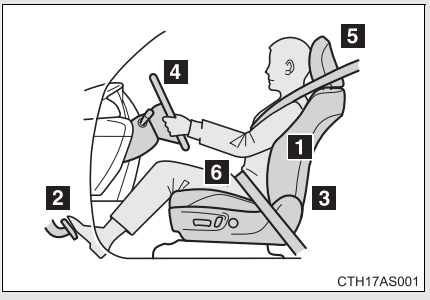

1. Sit upright and well back in the seat. (→P. 61)
2. Adjust the position of the seat forward or backward to ensure the pedals can be reached and easily depressed to the extent required. (→P. 61)
3. Adjust the seatback so that the controls are easily operable.
4. Adjust the tilt and telescopic positions of the steering wheel downward so the airbag is facing your chest. (→P. 86)
5. Lock the head restraint in place with the center of the head restraint closest to the top of your ears. (→P. 76)
6. Wear the seat belt correctly. (→P. 79)

CAUTION

■ **While driving**

- Do not adjust the position of the driver's seat.
  Doing so could cause the driver to lose control of the vehicle.
- Do not place a cushion between the driver or passenger and the seatback.
  A cushion may prevent correct posture from being achieved, and reduce the effectiveness of the seat belt and head restraint, increasing the risk of death or serious injury to the driver or passenger.
- Do not place anything under the front seats.
  Objects placed under the front seats may become jammed in the seat tracks and stop the seat from locking in place. This may lead to an accident, resulting in death or serious injury. The adjustment mechanism may also be damaged.

■ **Adjusting the seat position**

- Take care when adjusting the seat position to ensure that other passengers are not injured by the moving seat.
- Do not put your hands under the seat or near the moving parts to avoid injury.
  Fingers or hands may become jammed in the seat mechanism.

SRS airbags

The SRS airbags inflate when the vehicle is subjected to certain types of severe impacts that may cause significant injury to the occupants. They work together with the seat belts to help reduce the risk of death or serious injury.

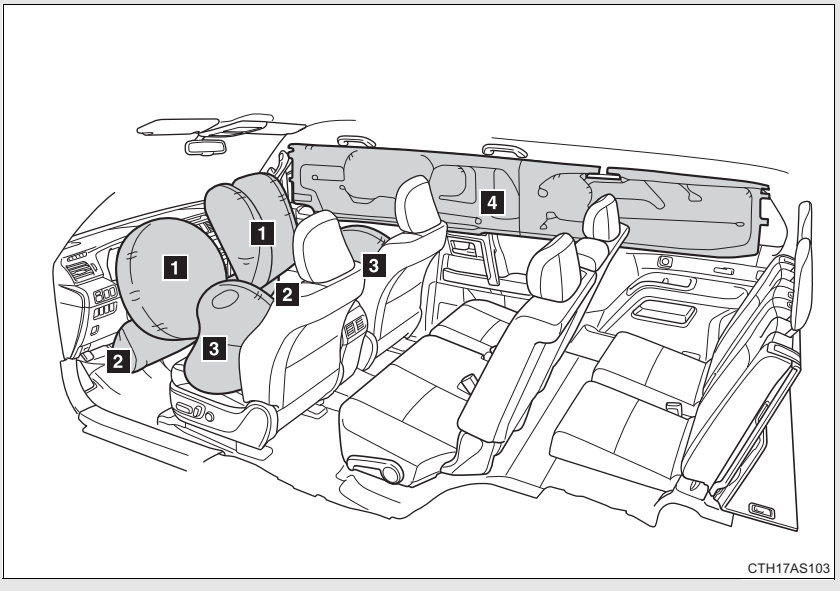

SRS front airbags

1 SRS driver airbag/front passenger airbag
Can help protect the head and chest of the driver and front passenger from impact with interior components

2 SRS knee airbags
Can help provide driver and front passenger protection

SRS side and curtain shield airbags

3 SRS side airbags
Can help protect the torso of the front seat occupants

4 SRS curtain shield airbags
Can help protect primarily the head of occupants in the outer seats

SRS airbag system components

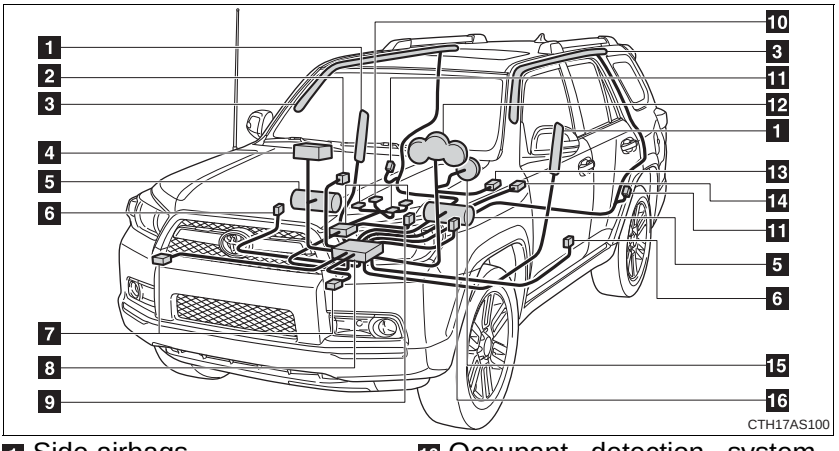

1. Side airbags
2. “AIR BAG ON” and “AIR BAG OFF” indicator lights
3. Curtain shield airbags
4. Front passenger airbag
5. Knee airbags
6. Side and curtain shield airbag sensors
7. Front airbag sensors
8. Airbag sensor assembly
9. Front passenger’s seat belt buckle switch
10. Occupant detection system (ECU and sensors)
11. Curtain shield airbag sensors
12. SRS warning light and “RSCA OFF” indicator light
13. Roll sensing of curtain shield airbags off switch
14. Floor sensor
15. Driver airbag
16. Driver’s seat belt buckle switch

Your vehicle is equipped with ADVANCED AIRBAGS designed based on the US motor vehicle safety standards (FMVSS208). The airbag system controls airbag deployment power for the driver and front passenger. The driver airbag system consists of the driver's seat belt buckle switch etc. The front passenger's airbag system consists of the front passenger occupant classification sensor etc.

The main SRS airbag system components are shown above. The SRS airbag system is controlled by the airbag sensor assembly. The airbag sensor assembly consists of a safing sensor and an airbag sensor.

In certain types of severe frontal or side impacts, the SRS airbag system triggers the airbag inflators. A chemical reaction in the inflators quickly fills the airbags with non-toxic gas to help restrain the motion of the occupants.

■ If the SRS airbags deploy (inflate)

- Bruising and slight abrasions may result from contact with a deploying (inflating) SRS airbag.
- A loud noise and white powder will be emitted.
- Parts of the airbag module (steering wheel hub, airbag cover and inflator) as well as the front seats, parts of the front and rear pillars, and roof side rails, may be hot for several minutes. The airbag itself may also be hot.
- The windshield may crack.
- For Safety Connect subscribers, if the SRS airbags deploy or in the event of a severe rear-end collision, the system is designed to send an emergency call to the response center, notifying them of the vehicle's location (without needing to push the "SOS" button) and an agent will attempt to speak with the occupants to ascertain the level of emergency and assistance required. If the occupants are unable to communicate, the agent automatically treats the call as an emergency and helps to dispatch the necessary emergency services. (→P. 469)

SRS airbag deployment conditions (SRS front airbags)

- The SRS front airbags will deploy in the event of an impact that exceeds the set threshold level (the level of force corresponding to an approximately 12 - 18 mph [20 - 30 km/h] frontal collision with a fixed wall that does not move or deform).

  However, this threshold velocity will be considerably higher if the vehicle strikes an object, such as a parked vehicle and sign pole, which can move or deform on impact, or if the vehicle is involved in an underride collision (e.g. a collision in which the front of the vehicle “underrides”, or goes under, the bed of a truck etc.).

- It is possible that in some collisions where the forward deceleration of the vehicle is very close to the designed threshold level, the SRS front airbags and the seat belt pretensioners may not activate together.

- The SRS front passenger airbag will not activate if there is no passenger sitting in the front passenger seat. However, the front passenger airbag may deploy, if luggage is put in the seat, even if the seat is unoccupied.

SRS airbag deployment conditions (SRS side airbags)

The SRS side airbags will deploy in the event of an impact that exceeds the set threshold level (the level of force corresponding to the impact force produced by an approximately 3300 lb. [1500 kg] vehicle colliding with the vehicle cabin from a direction perpendicular to the vehicle orientation at an approximately speed of 12 - 18 mph [20 - 30 km/h]).

SRS airbag deployment conditions (SRS curtain shield airbags)

The SRS curtain shield airbags will deploy in the event of vehicle rollover or an impact that exceeds the set threshold level (the level of force corresponding to the impact force produced by an approximately 3300 lb. [1500 kg] vehicle colliding with the vehicle cabin from a direction perpendicular to the vehicle orientation at an approximately speed of 12 - 18 mph [20 - 30 km/h]).

■Conditions under which the SRS airbags may deploy (inflate), other than a collision

The SRS front airbags may also deploy if a serious impact occurs to the underside of your vehicle. Some examples are shown in the illustration.

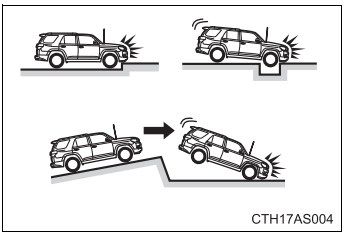

- Hitting a curb, edge of pavement or hard surface
- Falling into or jumping over a deep hole
- Landing hard or falling

The SRS curtain shield airbags may also deploy under the situations shown in the illustration.

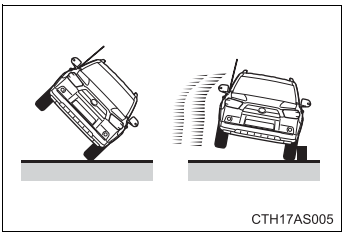

- The angle of vehicle tip-up is marginal.
- The vehicle skids and hits a curb stone.

■Types of collisions that may not deploy the SRS airbags (SRS front airbags)

The SRS front airbags are generally not designed to inflate if the vehicle is involved in a side or rear collision, if it rolls over, or if it is involved in a low-speed frontal collision. But, whenever a collision of any type causes sufficient forward deceleration of the vehicle, deployment of the SRS front airbags may occur.

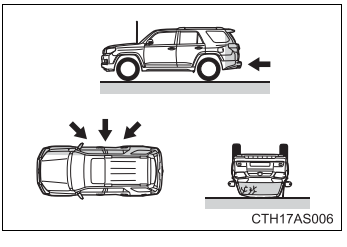

- Collision from the side
- Collision from the rear
- Vehicle rollover

■Types of collisions that may not deploy the SRS airbags (SRS side airbags and curtain shield airbags)

The SRS side airbag and curtain shield airbag system may not activate if the vehicle is subjected to a collision from the side at certain angles, or a collision to the side of the vehicle body other than the passenger compartment.

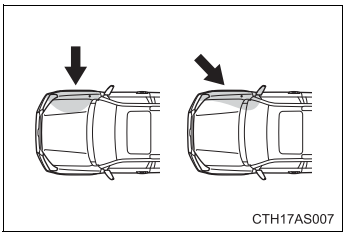

- Collision from the side to the vehicle body other than the passenger compartment
- Collision from the side at an angle

The SRS side airbags are not generally designed to inflate if the vehicle is involved in a frontal or rear collision, if it rolls over, or if it is involved in a low-speed side collision.

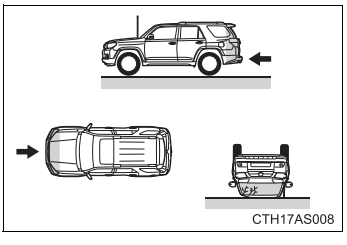

- Collision from the front
- Collision from the rear
- Vehicle rollover

The SRS curtain shield airbags are not generally designed to inflate if the vehicle is involved in a frontal or rear collision, if it pitches end over end, or if it is involved in a low-speed side collision.

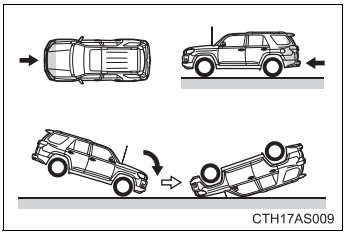

- Collision from the front
- Collision from the rear
- Pitching end over end

■When to contact your Toyota dealer

In the following cases, contact your Toyota dealer as soon as possible.

- Any of the SRS airbags have been inflated.

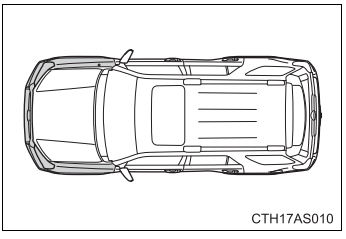

- The front of the vehicle is damaged or deformed, or was involved in an accident that was not severe enough to cause the SRS airbags to inflate.

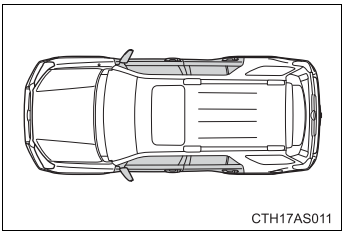

- A portion of a door is damaged or deformed, or the vehicle was involved in an accident that was not severe enough to cause the SRS side airbags and curtain shield airbags to inflate.

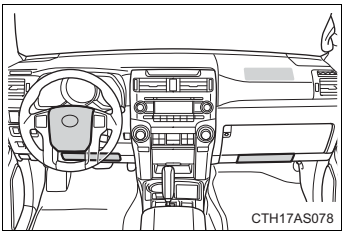

- The pad section of the steering wheel, dashboard near the front passenger airbag or lower portion of the instrument panel is scratched, cracked, or otherwise damaged.

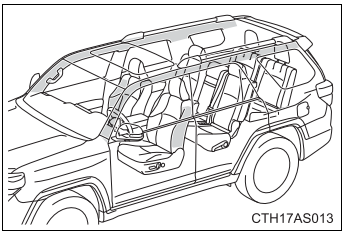

- The surface of the seats with the side airbag is scratched, cracked, or otherwise damaged.
- The portion of the front and rear pillar garnish, or roof interior containing the curtain shield airbags inside is scratched, cracked or otherwise damaged.

CAUTION

SRS airbag precautions

Observe the following precautions regarding the SRS airbags.
Failure to do so may cause death or serious injury.

- The driver and all passengers in the vehicle must wear their seat belts properly.
  The SRS airbags are supplemental devices to be used with the seat belts.
- The SRS driver airbag deploys with considerable force, and can cause death or serious injury especially if the driver is very close to the airbag. The National Highway Traffic Safety Administration (NHTSA) advises:

  Since the risk zone for the driver's airbag is the first 2 - 3 in. (50 - 75 mm) of inflation, placing yourself 10 in. (250 mm) from your driver airbag provides you with a clear margin of safety. This distance is measured from the center of the steering wheel to your breastbone. If you sit less than 10 in. (250 mm) away now, you can change your driving position in several ways:

  - Move your seat to the rear as far as you can while still reaching the pedals comfortably.
  - Slightly recline the back of the seat.
    Although vehicle designs vary, many drivers can achieve the 10 in. (250 mm) distance, even with the driver seat all the way forward, simply by reclining the back of the seat somewhat. If reclining the back of your seat makes it hard to see the road, raise yourself by using a firm, non-slippery cushion, or raise the seat if your vehicle has that feature.
  - If your steering wheel is adjustable, tilt it downward. This points the airbag toward your chest instead of your head and neck.

  The seat should be adjusted as recommended by NHTSA above, while still maintaining control of the foot pedals, steering wheel, and your view of the instrument panel controls.

CAUTION

■ **SRS airbag precautions**

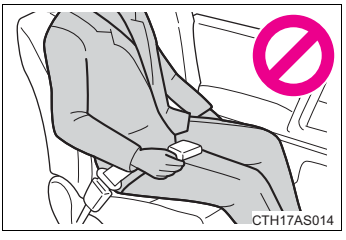

- If the seat belt extender has been connected to the driver's seat belt buckle but the seat belt extender has not also been fastened to the latch plate of the driver's seat belt, the SRS driver airbag system will judge that the driver is wearing the seat belt even though the seat belt has not been connected. In this case, the SRS driver airbag may not activate correctly in a collision, resulting in death or serious injury in the event of a collision. Be sure to wear the seat belt with the seat belt extender.
- The SRS front passenger airbag also deploys with considerable force, and can cause death or serious injury especially if the front passenger is very close to the airbag. The front passenger seat should be as far from the airbag as possible with the seatback adjusted, so the front passenger sits upright.
- Improperly seated and/or restrained infants and children can be killed or seriously injured by a deploying airbag. An infant or child who is too small to use a seat belt should be properly secured using a child restraint system. Toyota strongly recommends that all infants and children be placed in the rear seats of the vehicle and properly restrained. The rear seats are safer for infants and children than the front passenger seat. (→P. 136)

CAUTION

■ **SRS airbag precautions**

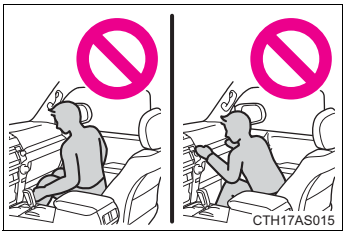

- Do not sit on the edge of the seat or lean against the dashboard.

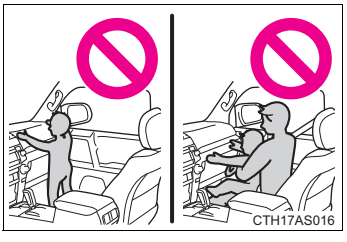

- Do not allow a child to stand in front of the SRS front passenger airbag unit or sit on the knees of a front passenger.
- Do not allow the front seat occupants to hold items on their knees.

- Do not lean against the door, the roof side rail or the front and rear pillars.

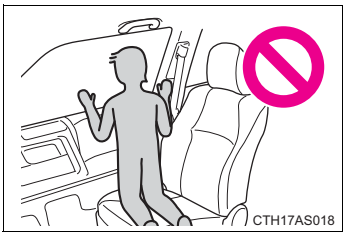

- Do not allow anyone to kneel on the passenger seat toward the door or put their head or hands outside the vehicle.

CAUTION

SRS airbag precautions

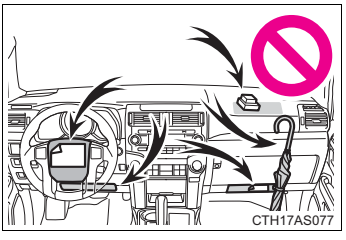

- Do not attach anything to or lean anything against areas such as the dashboard, steering wheel pad and lower portion of the instrument panel. These items can become projectiles when the SRS driver, front passenger and knee airbags deploy.

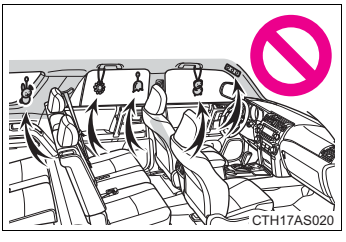

- Do not attach anything to areas such as a door, windshield glass, side door glass, front and rear pillars, roof side rail or assist grip.

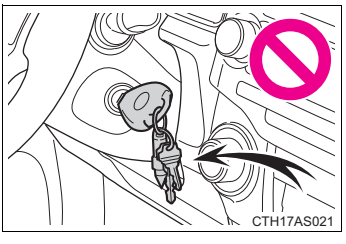

- Vehicles without a smart key system: Do not attach any heavy, sharp or hard objects such as keys and accessories to the key. The objects may restrict the SRS knee airbag inflation or be thrust into the driver's seat area by the force of the deploying airbag, thus causing a danger.

CAUTION

SRS airbag precautions

- Do not hang coat hangers or other hard objects on the coat hooks. All of these items could become projectiles and may cause death or serious injury, should the SRS curtain shield airbags deploy.
- If a vinyl cover is put on the area where the SRS knee airbag will deploy, be sure to remove it.
- Do not use seat accessories which cover the parts where the SRS side airbags inflate as they may interfere with inflation of the airbags. Such accessories may prevent the side airbags from activating correctly, disable the system or cause the side airbags to inflate accidentally, resulting in death or serious injury.
- Do not strike or apply significant levels of force to the area of the SRS airbag components.
  Doing so can cause the SRS airbags to malfunction.
- Do not touch any of the component parts immediately after the SRS airbags have deployed (inflated) as they may be hot.
- If breathing becomes difficult after the SRS airbags have deployed, open a door or window to allow fresh air in, or leave the vehicle if it is safe to do so. Wash off any residue as soon as possible to prevent skin irritation.
- If the areas where the SRS airbags are stored, such as the steering wheel pad and front and rear pillar garnishes, are damaged or cracked, have them replaced by your Toyota dealer.

CAUTION

■ Modification and disposal of SRS airbag system components

Do not dispose of your vehicle or perform any of the following modifications without consulting your Toyota dealer. The SRS airbags may malfunction or deploy (inflate) accidentally, causing death or serious injury.

- Installation, removal, disassembly and repair of the SRS airbags
- Repairs, modifications, removal or replacement of the steering wheel, instrument panel, dashboard, seats or seat upholstery, front and rear pillars, roof side rails or roof head lining
- Repairs or modifications of the front fender, front bumper, or side of the occupant compartment
- Installation of snow plows, winches, etc. to the front grille (bull bars, or kangaroo bar etc.)
- Modifications to the vehicle's suspension system
- Installation of electronic devices such as mobile two-way radios and CD players
- Modifications to your vehicle for a person with a physical disability

Deactivating the curtain shield airbags in a vehicle rollover

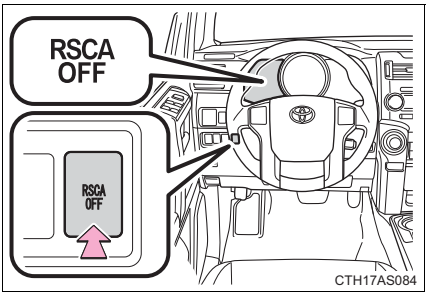

On/off (hold for a few seconds)

Vehicles without a smart key system: The “RSCA OFF” indicator turns on. (only when the engine switch is in the “ON” position).

The roll sensing function for the curtain shield airbags and seat belt pretensioners will turn back on automatically each time the engine switch is turned to the “ON” position.

Vehicles with a smart key system: The “RSCA OFF” indicator comes on. (only when the “ENGINE START STOP” switch is in IGNITION ON mode).

The roll sensing function for the curtain shield airbags and seat belt pretensioners will turn back on automatically each time the “ENGINE START STOP” switch is turned to IGNITION ON mode.

■ This switch only should be used

In a situation where the inflation is not desired (such as during extreme off-road driving).

■ Operating conditions when the “RSCA OFF” indicator is illuminated

- The curtain shield airbags and seat belt pretensioner will not activate in a vehicle rollover.
- The curtain shield airbags will activate in a severe side impact.

CAUTION

During normal driving

Make sure the “RSCA OFF” indicator light is not turned on. If it is left on, the curtain shield airbags will not activate in the event of an accident, which may cause death or serious injury.

Front passenger occupant classification system

Your vehicle is equipped with a front passenger occupant classification system. This system detects the conditions of the front passenger seat and activates or deactivates the devices for the front passenger.

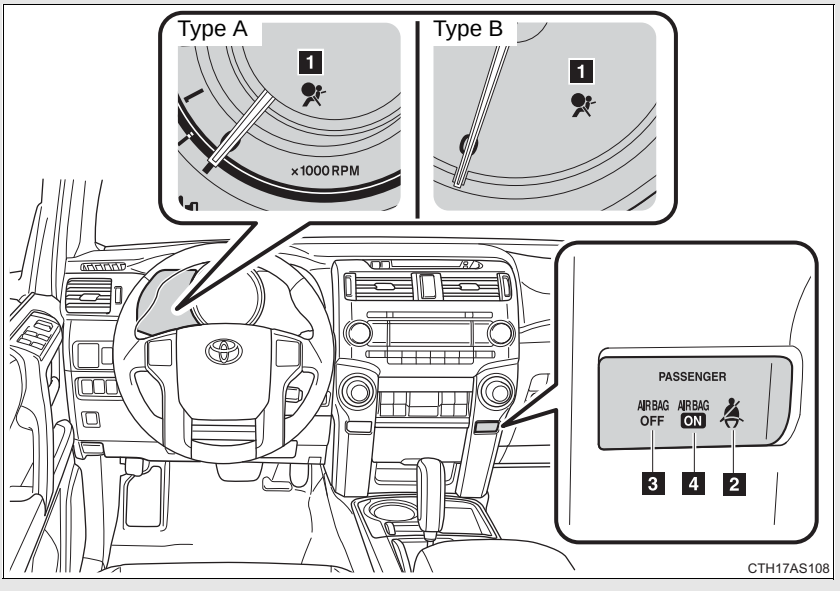

1 SRS warning light

2 Front passenger's seat belt reminder light

3 "AIR BAG OFF" indicator light

4 "AIR BAG ON" indicator light

Condition and operation in the front passenger occupant classification system

■ Adult*1

Indicator/ warning light	“AIR BAG ON” and “AIR BAG OFF” indicator lights	“AIR BAG ON”
	SRS warning light	Off
	Front passenger’s seat belt reminder light	Flashing*2
Devices	Front passenger airbag	Activated
	Side airbag on the front passenger seat	
	Curtain shield airbag in the front passenger side	
	Front passenger knee airbag	
	Front passenger's seat belt pretensioner	

■ Child*3 or child restraint system*4

Indicator/ warning light	“AIR BAG ON” and “AIR BAG OFF” indicator lights	“AIR BAG OFF”*5
	SRS warning light	Off
	Front passenger’s seat belt reminder light	Flashing*2
Devices	Front passenger airbag	Deactivated
	Side airbag on the front passenger seat	Activated
	Curtain shield airbag in the front passenger side	Activated
	Front passenger knee airbag	Deactivated
	Front passenger's seat belt pretensioner	Activated

Unoccupied

Indicator/ warning light	“AIR BAG ON” and “AIR BAG OFF” indicator lights	Not illuminated
	SRS warning light	Off
	Front passenger’s seat belt reminder light	
Devices	Front passenger airbag	Deactivated
	Side airbag on the front passenger seat	Activated
	Curtain shield airbag in the front passenger side	Activated
	Front passenger knee airbag	Deactivated
	Front passenger's seat belt pretensioner	

■ There is a malfunction in the system

Indicator/ warning light	“AIR BAG ON” and “AIR BAG OFF” indicator lights	“AIR BAG OFF”
	SRS warning light	On
	Front passenger's seat belt reminder light	Off
Devices	Front passenger airbag	Deactivated
	Side airbag on the front passenger seat	Activated
	Curtain shield airbag in the front passenger side	Activated
	Front passenger knee airbag	Deactivated
	Front passenger's seat belt pretensioner	Activated

*1: The system judges a person of adult size as an adult. When a smaller adult sits in the front passenger seat, the system may recognize him/her as a child depending on his/her physique and posture.

*2: In the event the front passenger does not wear a seat belt.

*3: When a larger child who has outgrown a child restraint system sits in the front passenger seat, the system may recognize him/her as an adult depending on his/her physique or posture.

*4: Never install a rear-facing child restraint system on the front passenger seat. A forward-facing child restraint system should only be installed on the front passenger seat when it is unavoidable. (→P. 136)

*5: In case the indicator light is not illuminated, consult this manual on how to install the child restraint system properly. (→P. 140)

CAUTION

Front passenger occupant classification system precautions

Observe the following precautions regarding the front passenger occupant classification system.
Failure to do so may cause death or serious injury.

- Wear the seat belt properly.
- Make sure the front passenger's seat belt plate has not been left inserted into the buckle before someone sits in the front passenger seat.
- Make sure the "AIR BAG OFF" indicator light is not illuminated when using the seat belt extender for the front passenger seat. If the "AIR BAG OFF" indicator light is illuminated, disconnect the extender tongue from the seat belt buckle, and reconnect the seat belt. Reconnect the seat belt extender after making sure the "AIR BAG ON" indicator light is illuminated. If you use the seat belt extender while the "AIR BAG OFF" indicator light is illuminated, the front passenger airbag and front passenger knee airbag may not activate correctly, which could cause death or serious injury in the event of a collision.
- Do not apply a heavy load to the front passenger seat or equipment.
- Do not put weight on the front passenger seat by putting your hands or feet on the front passenger seat seatback from the rear passenger seat.
- Do not let a rear passenger lift the front passenger seat with their feet or press on the seatback with their legs.
- Do not put objects under the front passenger seat.
- Do not recline the front passenger seatback so far that it touches a rear seat. This may cause the "AIR BAG OFF" indicator light to be illuminated, which indicates that the passenger's airbags will not deploy in the event of a severe accident. If the seatback touches the rear seat, return the seatback to a position where it does not touch the rear seat. Keep the front passenger seatback as upright as possible when the vehicle is moving. Reclining the seatback excessively may lessen the effectiveness of the seat belt system.

CAUTION

■ **Front passenger occupant classification system precautions**

- If an adult sits in the front passenger seat, the “AIR BAG ON” indicator light is illuminated. If the “AIR BAG OFF” indicator is illuminated, ask the passenger to sit up straight, well back in the seat, feet on the floor, and with the seat belt worn correctly. If the “AIR BAG OFF” indicator still remains illuminated, either ask the passenger to move to the rear seat, or if that is not possible, move the front passenger seat fully rearward.
- When it is unavoidable to install a forward-facing child restraint system on the front passenger seat, install the child restraint system on the front passenger seat in the proper order. (→P. 140)
- Do not modify or remove the front seats.
- Do not kick the front passenger seat or subject it to severe impact. Otherwise, the SRS warning light may come on to indicate a malfunction of the detection system. In this case, contact your Toyota dealer immediately.
- Child restraint systems installed on the second seat should not contact the front seatbacks.
- Do not use a seat accessory, such as a cushion and seat cover, that covers the seat cushion surface.
- Do not modify or replace the upholstery of the front seat.

A child restraint system for a small child or baby must itself be properly restrained on the seat with the lap portion of the lap/shoulder belt.

The laws of all 50 states of the U.S.A. and Canada now require the use of child restraint systems.

Points to remember

Studies have shown that installing a child restraint on a rear seat is much safer than installing one on the front passenger seat.

- Choose a child restraint system that suits your vehicle and is appropriate to the age and size of the child.
- For installation details, follow the instructions provided with the child restraint system.
  General installation instructions are provided in this manual.
  (→P. 140)

Types of child restraints

Child restraint systems are classified into the following 3 types according to the age and size of the child:

Rear facing — Infant seat/convertible seat

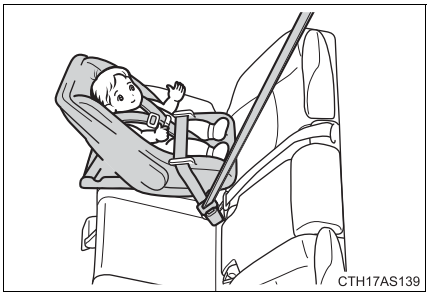

Forward facing — Convertible seat

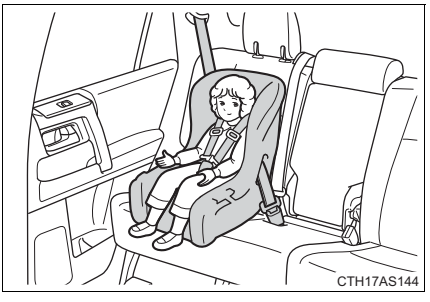

Booster seat

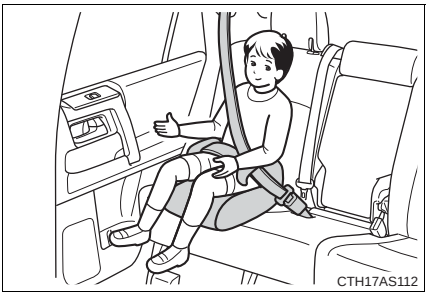

■Selecting an appropriate child restraint system

- Use a child restraint system appropriate for the child until the child becomes large enough to properly wear the vehicle's seat belt.
- If the child is too large for a child restraint system, sit the child on a rear seat and use the vehicle's seat belt. (→P. 79)

CAUTION

Child restraint precautions

- For effective protection in automobile accidents and sudden stops, a child must be properly restrained, using a seat belt or child restraint system depending on the age and size of the child. Holding a child in your arms is not a substitute for a child restraint system. In an accident, the child can be crushed against the windshield, or between you and the vehicle's interior.
- Toyota strongly urges the use of a proper child restraint system that conforms to the size of the child, installed on the rear seat. According to accident statistics, the child is safer when properly restrained in the rear seat than in the front seat.
- Never install a rear-facing child restraint system on the front passenger seat even if the "AIR BAG OFF" indicator light is illuminated. In the event of an accident, the force of the rapid inflation of the front passenger airbag can cause death or serious injury to the child if the rear-facing child restraint system is installed on the front passenger seat.
- A forward-facing child restraint system may be installed on the front passenger seat only when it is unavoidable. A child restraint system that requires a top tether strap should not be used in the front passenger seat since there is no top tether strap anchor for the front passenger seat. Adjust the seatback as upright as possible and always move the seat as far back as possible even if the "AIR BAG OFF" indicator light illuminated, because the front passenger airbag could inflate with considerable speed and force. Otherwise, the child may be killed or seriously injured.

CAUTION

■Child restraint precautions

- Do not use the seat belt extender when installing a child restraint system on the front or rear passenger seat. If installing a child restraint system with the seat belt extender connected to the seat belt, the seat belt will not securely hold the child restraint system, which could cause death or serious injury to the child or other passengers in the event of a sudden stop, sudden swerve or an accident.
- Do not allow the child to lean his/her head or any part of his/her body against the door or the area of the seat, front and rear pillars or roof side rail from which the SRS side airbags or SRS curtain shield airbags deploy even if the child is seated in the child restraint system. It is dangerous if the SRS side airbags and SRS curtain shield airbags inflate, and the impact could cause death or serious injury to the child.
- Make sure you have complied with all installation instructions provided by the child restraint manufacturer and that the system is properly secured. If it is not secured properly, it may cause death or serious injury to the child in the event of a sudden stop, sudden swerve or an accident.

■Child restraint lock function belt precaution

Do not allow children to play with the child restraint lock function belt. If the belt becomes twisted around a child's neck, it will not be possible to pull the belt out leading to choking or other serious injuries that could result in death. If this occurs and the buckle cannot be unfastened, scissors should be used to cut the belt.

■When the child restraint system is not in use

- Keep the child restraint system properly secured on the seat even if it is not in use. Do not store the child restraint system unsecured in the passenger compartment.
- If it is necessary to detach the child restraint system, remove it from the vehicle or store it securely in the luggage compartment. This will prevent it from injuring passengers in the event of a sudden stop, sudden swerve or accident.

Installing child restraints

Follow the child restraint system manufacturer's instructions. Firmly secure the child restraints using the LATCH anchors or a seat belt. Attach the top tether strap when installing a child restraint.

The lap/shoulder belt can be used if your child restraint system is not compatible with the LATCH (Lower Anchors and Tethers for Children) system.

Vehicles without third row seats

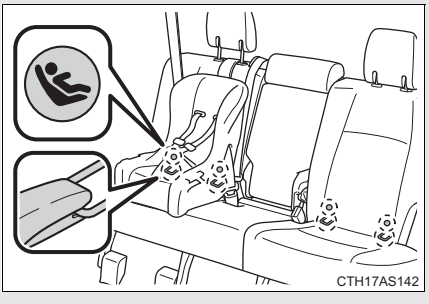

Child restraint LATCH anchors

LATCH anchors are provided for the outside rear seats. (Buttons displaying the location of the anchors are attached to the seats.)

Vehicles with third row seats

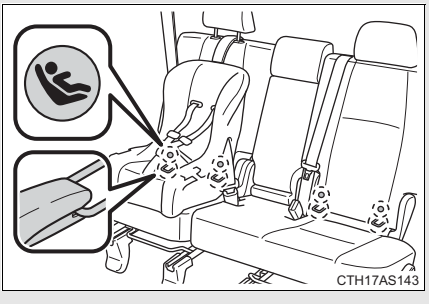

Child restraint LATCH anchors

LATCH anchors are provided for the outside second row seats. (Buttons displaying the location of the anchors are attached to the seats.)

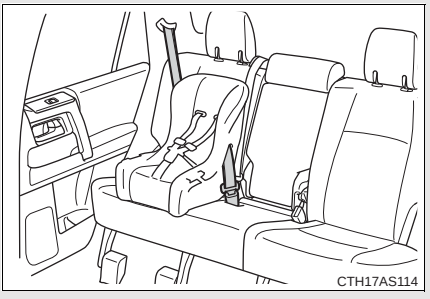

Seat belts equipped with a child restraint locking mechanism (ALR/ELR belts except driver's seat belt) (→P. 79)

Vehicles without third row seats

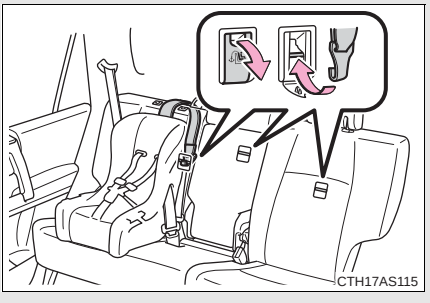

Anchor brackets (for top tether strap)

An anchor bracket is provided for each rear seat.

Vehicles with third row seats

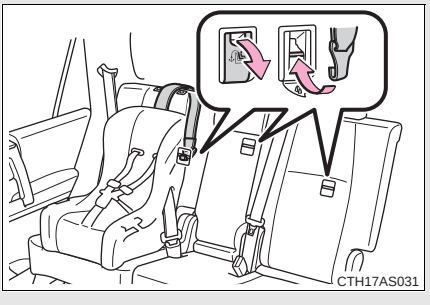

Anchor brackets (for top tether strap)

An anchor bracket is provided for each second row seat.

Installation with LATCH system (rear/second row seats only)

■ Installing on the rear seats (vehicles without third row seats)

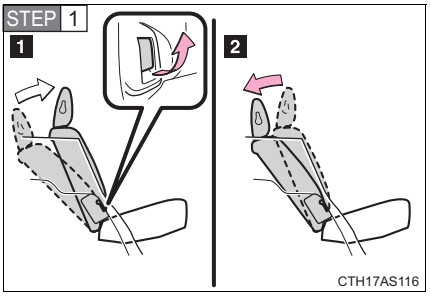

Fold the seatback while pulling the seatback angle adjustment lever. Return the seatback and secure it at the first lock position. (→P. 65)

Type A

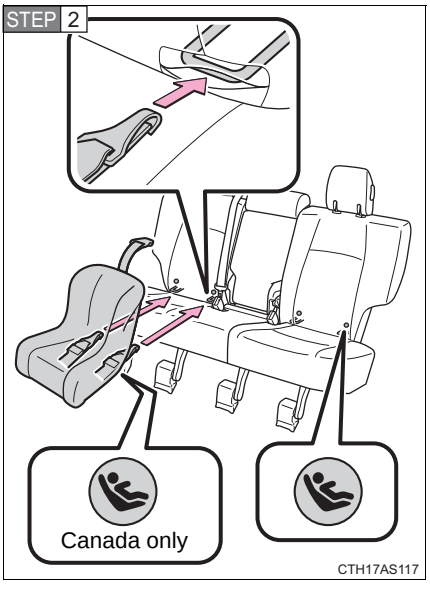

Latch the hooks of the lower straps onto the LATCH anchors. If the child restraint has a top tether strap, the top tether strap should be latched onto the top tether strap anchor.

For owners in Canada:
The symbol on a child restraint system indicates the presence of a lower connector system.

Type B

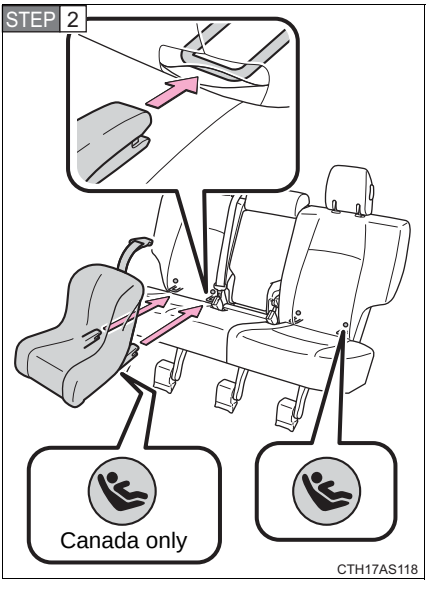

Latch the buckles onto the LATCH anchors. If the child restraint has a top tether strap, the top tether strap should be latched onto the top tether strap anchor.

For owners in Canada:
The symbol on a child restraint system indicates the presence of a lower connector system.

■ Installing on the second row seats (vehicles with third row seats)

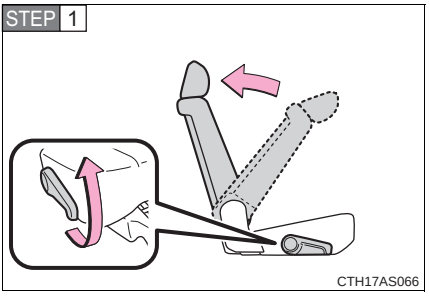

Fold the seatback while pulling the seatback angle adjustment lever. Return the seatback and secure it at the first lock position. (→P. 65)

STEP 2 Flip the cover.

Type A

Latch the hooks of the lower straps onto the LATCH anchors. If the child restraint has a top tether strap, the top tether strap should be latched onto the top tether strap anchor.

For owners in Canada:
The symbol on a child restraint system indicates the presence of a lower connector system.

Type B

Latch the buckles onto the LATCH anchors. If the child restraint has a top tether strap, the top tether strap should be latched onto the top tether strap anchor.

For owners in Canada:
The symbol on a child restraint system indicates the presence of a lower connector system.

Installing child restraints using a seat belt (child restraint lock function belt)

■ Rear facing — Infant seat/convertible seat

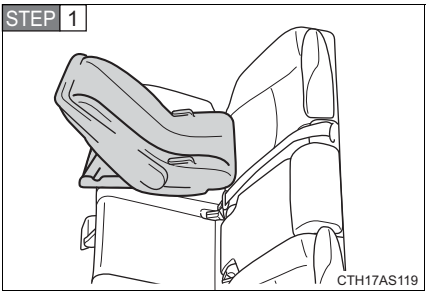

Place the child restraint system on the rear seat facing the rear of the vehicle.

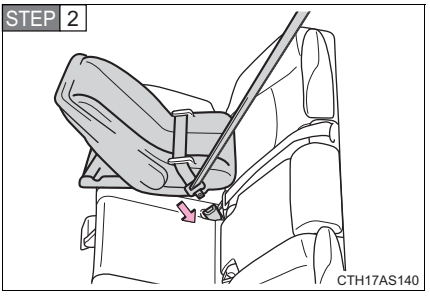

Run the seat belt through the child restraint system and insert the plate into the buckle. Make sure that the belt is not twisted.

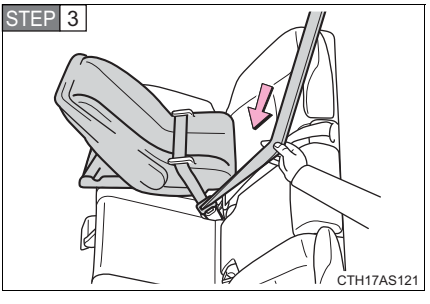

Fully extend the shoulder belt and allow it to retract to put it in lock mode. In lock mode, the belt cannot be extended.

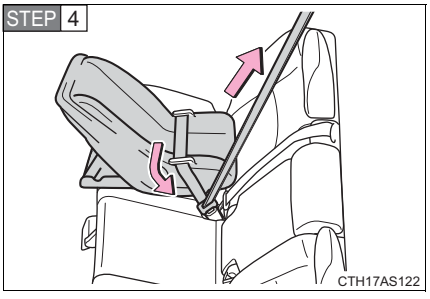

While pushing the child restraint system down into the rear seat, allow the shoulder belt to retract until the child restraint system is securely in place.

After the shoulder belt has retracted to a point where there is no slack in the belt, pull the belt to check that it cannot be extended.

■ Forward facing — Convertible seat

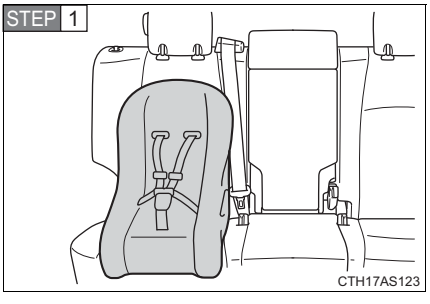

Place the child restraint system on the seat facing the front of the vehicle.

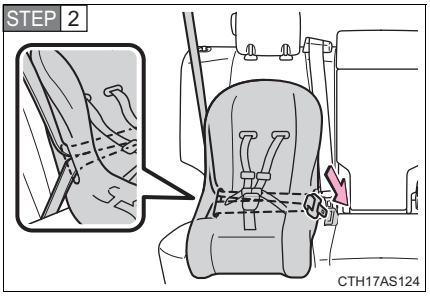

Run the seat belt through the child restraint system and insert the plate into the buckle. Make sure that the belt is not twisted.

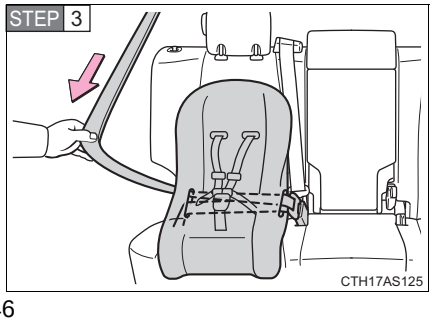

Fully extend the shoulder belt and allow it to retract to put it in lock mode. In lock mode, the belt cannot be extended.

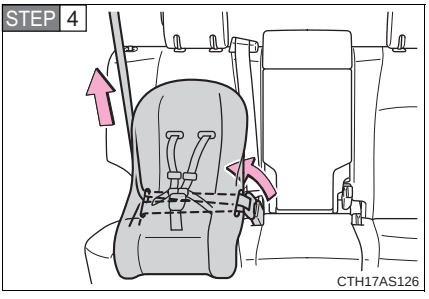

While pushing the child restraint system into the rear seat, allow the shoulder belt to retract until the child restraint system is securely in place.

After the shoulder belt has retracted to a point where there is no slack in the belt, pull the belt to check that it cannot be extended.

STEP 5 If the child restraint has a top tether strap, the top tether strap should be latched onto the top tether strap anchor. (→P. 148)

■ Booster seat

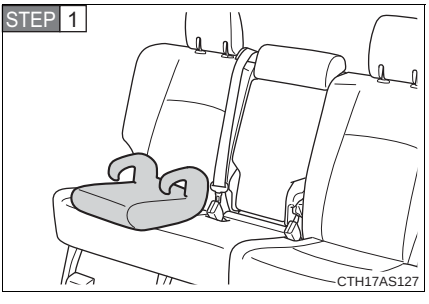

Place the child restraint system on the seat facing the front of the vehicle.

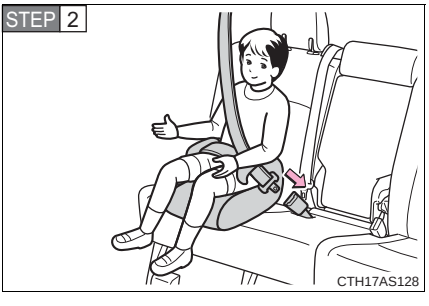

Sit the child in the child restraint system. Fit the seat belt to the child restraint system according to the manufacturer's instructions and insert the plate into the buckle. Make sure that the belt is not twisted.

Check that the shoulder belt is correctly positioned over the child's shoulder and that the lap belt is as low as possible.
(→P. 79)

Removing a child restraint installed with a seat belt

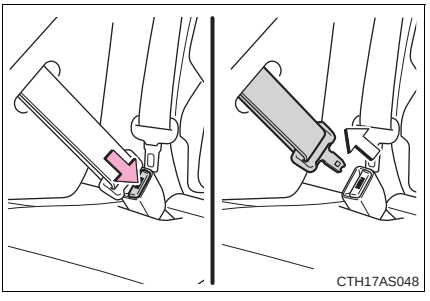

Push the buckle release button and fully retract the seat belt.

Child restraint systems with a top tether strap

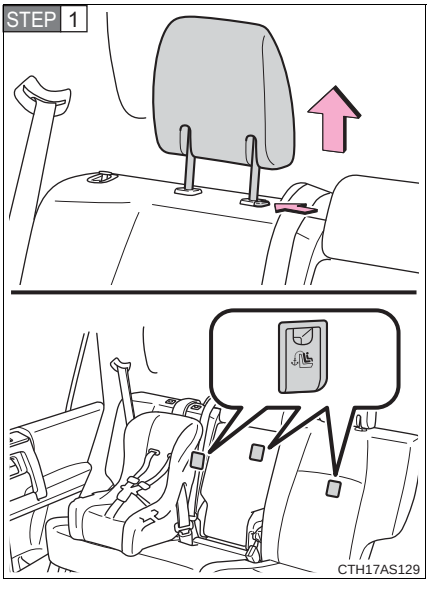

Secure the child restraint system using a seat belt or the lower anchors, and remove the head restraint.

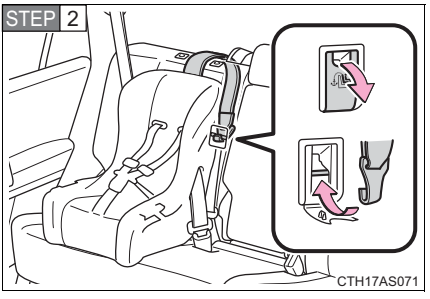

Open the anchor bracket cover, latch the hook onto the anchor bracket and tighten the top tether strap.

Make sure the top tether strap is securely latched.

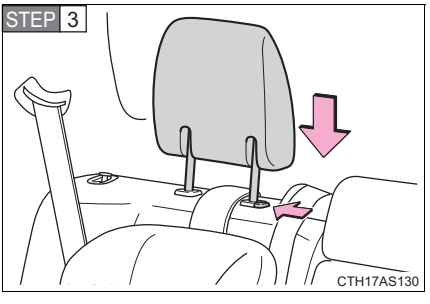

Replace the head restraint.

■ Laws and regulations pertaining to anchorages

The LATCH system conforms to FMVSS225 or CMVSS210.2.
Child restraint systems conforming to FMVSS213 or CMVSS213 specifications can be used.
This vehicle is designed to conform to SAE J1819.

CAUTION

■ **When installing a booster seat**

To prevent the belt from going into ALR lock mode, do not fully extend the shoulder belt. ALR mode causes the belt to tighten only. This could cause injury or discomfort to the child. (→P. 81)

■ **When installing a child restraint system**

Follow the directions given in the child restraint system installation manual and fix the child restraint system securely in place.
If the child restraint system is not correctly fixed in place, the child or other passengers may be seriously injured or even killed in the event of sudden braking, sudden swerving or an accident.

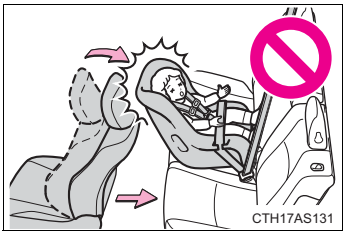

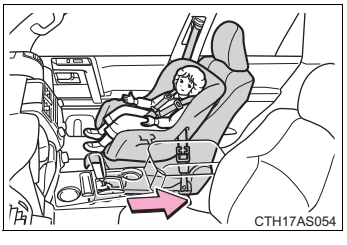

- If the driver's seat interferes with the child restraint system and prevents it from being attached correctly, attach the child restraint system to the right-hand rear seat.
- Adjust the front passenger seat so that it does not interfere with the child restraint system.
- Only put a forward-facing child restraint system on the front seat when unavoidable. When installing a forward-facing child restraint system on the front passenger seat, move the seat as far back as possible even if the "AIR BAG OFF" indicator light is illuminated. Failure to do so may result in death or serious injury if the airbags deploy (inflate).

CAUTION

■ **When installing a child restraint system**

- Vehicles with third row seats: When using the LATCH anchors for a child restraint system, move the seat as far back as possible, with the seatback close to the child restraint system.
- When a booster seat is installed, always ensure that the shoulder belt is positioned across the center of the child's shoulder. The belt should be kept away from the child's neck, but not so that it could fall off the child's shoulder. Failure to do so may result in death or serious injury in the event of sudden braking, sudden swerving or an accident.
- Ensure that the belt and plate are securely locked and the seat belt is not twisted.
- Push and pull the child restraint system from side to side and forward to be sure it is secure.
- After securing a child restraint system, never adjust the seat.
- Follow all installation instructions provided by the child restraint system manufacturer.

CAUTION

■ **Do not use a seat belt extender**

If a seat belt extender is used when installing a child restraint system, the seat belt will not securely hold the child restraint system, which could cause death or serious injury to the child or other passengers in the event of sudden braking, sudden swerving or an accident.

■ **To correctly attach a child restraint system to the anchors**

● When using the LATCH anchors, be sure that there are no foreign objects around the anchors and that the seat belt is not caught behind the child restraint. Make sure the child restraint system is securely attached, or it may cause death or serious injury to the child or other passengers in the event of sudden braking, sudden swerve or an accident.

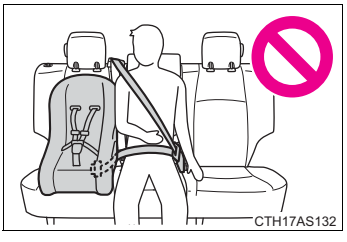

● When using the left side LATCH anchors for the child restraint system, do not sit in the center seat. Seat belt function may be impaired, such as being positioned overly high or loose-fitting, which may result in death or serious injury in the event of sudden braking or an accident.

When driving 2

2-1. Driving procedures

Driving the vehicle..... 154
Engine (ignition) switch (vehicles without a smart key system)..... 164
Engine (ignition) switch (vehicles with a smart key system)..... 167
Automatic transmission.... 173
Turn signal lever 179
Parking brake..... 180
Horn 181

2-2. Instrument cluster

Gauges and meters 182
Indicators and warning lights 189
Accessory meter 194

2-3. Operating the lights and wipers

Headlight switch..... 198
Fog light switch 204
Windshield wipers and washer 205
Rear window wiper and washer 207

2-4. Using other driving systems

Cruise control..... 209
Intuitive parking assist..... 213
Rear view monitor system 218
Four-wheel drive system (part-time 4WD models) 223
Four-wheel drive system (full-time 4WD models) 226
Active traction control system 230
AUTO LSD system..... 232
Rear differential lock system 235
Downhill assist control system 238
Crawl Control 241
Multi-terrain Select..... 245
Driving assist systems 253

2-5. Driving information

Off-road precautions 262
Cargo and luggage 267
Vehicle load limits 273
Winter driving tips 275
Trailer towing 280
Dinghy towing 293

Driving the vehicle

The following procedures should be observed to ensure safe driving:

■ Starting the engine

→P. 164, 167

■ Driving

STEP 1 With the brake pedal depressed, shift the shift lever to D. (→P. 173)

STEP 2 Release the parking brake. (→P. 180)

STEP 3 Gradually release the brake pedal and gently depress the accelerator pedal to accelerate the vehicle.

■ Stopping

STEP 1 With the shift lever in D, depress the brake pedal.

STEP 2 If necessary, set the parking brake.

If the vehicle is to be stopped for an extended period of time, shift the shift lever to P or N. (→P. 173)

■ Parking the vehicle

STEP 1 With the shift lever in D, depress the brake pedal.

STEP 2 Set the parking brake. (→P. 180)

STEP 3 Shift the shift lever to P. (→P. 173)

If parking on a hill, block the wheels as needed.

STEP 4 Vehicles without a smart key system:
Turn the engine switch to the “LOCK” position to stop the engine.

Vehicles with a smart key system:
Press the “ENGINE START STOP” switch to stop the engine.

STEP 5 Lock the door, making sure that you have the key on your person.

Starting off on a steep uphill

STEP 1 Make sure that the parking brake is set and shift the shift lever to D.

STEP 2 Gently depress the accelerator pedal.

STEP 3 Release the parking brake.

Driving in the rain

- Drive carefully when it is raining, because visibility will be reduced, the windows may become fogged-up, and the road will be slippery.
- Drive carefully when it starts to rain, because the road surface will be especially slippery.
- Refrain from high speeds when driving on an expressway in the rain, because there may be a layer of water between the tires and the road surface, preventing the steering and brakes from operating properly.

Breaking in your new Toyota

To extend the life of the vehicle, observing the following precautions is recommended:

- For the first 200 miles (300 km):
  Avoid sudden stops.
- For the first 500 miles (800 km):
  Do not tow a trailer.
- For the first 1000 miles (1600 km):
  - Do not drive at extremely high speeds.
  - Avoid sudden acceleration.
  - Do not drive continuously in the low gears.
  - Do not drive at a constant speed for extended periods.

Drum-in-disc type parking brake system

Your vehicle has a drum-in-disc type parking brake system. This type of brake system needs bedding-down of the brake shoes periodically or whenever the parking brake shoes and/or drum are replaced. Have your Toyota dealer perform the bedding down operation.

Operating your vehicle in a foreign country

Comply with the relevant vehicle registration laws and confirm the availability of the correct fuel. (→P. 615)

CAUTION

When starting the vehicle

Always keep your foot on the brake pedal while stopped with the engine running. This prevents the vehicle from creeping.

When driving the vehicle

- Do not drive if you are unfamiliar with the location of the brake and accelerator pedals to avoid depressing the wrong pedal.
  - Accidentally depressing the accelerator pedal instead of the brake pedal will result in sudden acceleration that may lead to an accident that could result in death or serious injury.
  - When backing up, you may twist your body around, leading to a difficulty in operating the pedals. Make sure to operate the pedals properly.
  - Make sure to keep a correct driving posture even when moving the vehicle only slightly. This allows you to depress the brake and accelerator pedals properly.
  - Depress the brake pedal using your right foot. Depressing the brake pedal using your left foot may delay response in an emergency, resulting in an accident.
- Do not drive the vehicle over or stop the vehicle near flammable materials. The exhaust system and exhaust gases can be extremely hot. These hot parts may cause a fire if there is any flammable material nearby.
- Do not let the vehicle roll backward while the shift lever is in a driving position, or roll forward while the shift lever is in R.
  Doing so may cause the engine to stall or lead to poor brake and steering performance, resulting in an accident or damage to the vehicle.
- If the smell of exhaust is noticed inside the vehicle, open the windows and check that the back door is closed. Large amounts of exhaust in the vehicle can cause driver drowsiness and an accident, resulting in death or a serious health hazard. Have the vehicle inspected by your Toyota dealer immediately.

CAUTION

- Do not under any circumstances shift the shift lever to P while the vehicle is moving.
  Doing so can cause significant damage to the driveline and may result in a loss of vehicle control.
- Do not under any circumstances shift the shift lever to R while the vehicle is moving forward.
  Doing so can cause significant damage to the driveline and may result in a loss of vehicle control.
- Do not shift the shift lever to N while the vehicle is moving.
  Doing so may cause insufficient engine braking, resulting in an accident.
- Do not turn the engine off while driving.
  The power steering and brake actuator will not operate properly if the engine is not running.
- Use engine braking (downshift) to maintain a safe speed when driving down a steep hill.
  Using the brakes continuously may cause the brakes to overheat and lose effectiveness. (→P. 175)
- Do not adjust the positions of the steering wheel, the seat, or the inside or outside rear view mirrors while driving.
  Doing so may result in a loss of vehicle control that can cause accidents, resulting in death or serious injury.
- Always check that all passengers' arms, heads or other parts of their body are not outside the vehicle, as this may result in death or serious injury.
- Do not drive in excess of the speed limit. Even if the legal speed limit permits it, do not drive over 85 mph (140 km/h) unless your vehicle has high-speed capability tires. Driving over 85 mph (140 km/h) may result in tire failure, loss of control and possible injury. Be sure to consult a tire dealer to determine whether the tires on your vehicle are high-speed capability tires or not before driving at such speeds.

CAUTION

■ **When driving on slippery road surfaces**

- Sudden braking, acceleration and steering may cause tire slippage and reduce your ability to control the vehicle, resulting in an accident.
- Sudden changes in engine speed, such as engine braking caused by up-shifting or down-shifting, may cause the vehicle to skid, resulting in an accident.
- After driving through a puddle, lightly depress the brake pedal to make sure that the brakes are functioning properly. Wet brake pads may prevent the brakes from functioning properly. If the brakes on only one side are wet and not functioning properly, steering control may be affected, resulting in an accident.

■ **When shifting the shift lever**

Be careful not to shift the shift lever with the accelerator pedal depressed. Shifting the shift lever to a gear other than P or N may lead to unexpected rapid acceleration of the vehicle that may cause an accident and result in death or serious injury.

■ **If you hear a squealing or scraping noise (brake pad wear limit indicators)**

Have the brake pads checked and replaced by your Toyota dealer as soon as possible.
Rotor damage may result if the pads are not replaced when needed.

It is dangerous to drive the vehicle when the wear limits of the brake pads and/or those of the brake discs are exceeded.

CAUTION

■ **When the vehicle is stopped**

- Do not race the engine.
  If the vehicle is in any gear other than P or N, the vehicle may accelerate suddenly and unexpectedly, causing an accident.
- Do not leave the vehicle with the engine running for a long time.
  If such a situation cannot be avoided, park the vehicle in an open space and check that exhaust fumes do not enter the vehicle interior.
- In order to prevent accidents due to the vehicle rolling away, always keep depressing the brake pedal while the engine is running, and apply the parking brake as necessary.
- If the vehicle is stopped on an incline, in order to prevent accidents caused by the vehicle rolling forward or backward, always depress the brake pedal and securely apply the parking brake as needed.
- Avoid revving or racing the engine.
  Running the engine at high speed while the vehicle is stopped may cause the exhaust system to overheat, which could result in a fire if combustible material is nearby.

■ **When the vehicle is parked**

- Do not leave glasses, cigarette lighters, spray cans, or soft drink cans in the vehicle when it is in the sun.
  Doing so may result in the following:
  - Gas may leak from a cigarette lighter or spray can, and may lead to a fire.
  - The temperature inside the vehicle may cause the plastic lenses and plastic material of glasses to deform or crack.
  - Soft drink cans may fracture, causing the contents to spray over the interior of the vehicle, and may also cause a short circuit in the vehicle's electrical components.
- Do not leave cigarette lighters in the vehicle. If a cigarette lighter is in a place such as the glove box or on the floor, it may be lit accidentally when luggage is loaded or the seat is adjusted, causing a fire.
- Do not attach adhesive discs to the windshield or windows. Do not place containers such as air fresheners on the instrument panel or dashboard. Adhesive discs or containers may act as lenses, causing a fire in the vehicle.

CAUTION

- Do not leave a door or window open if the curved glass is coated with a metallized film such as a silver-colored one. Reflected sunlight may cause the glass to act as a lens, causing a fire.
- Always apply the parking brake, shift the shift lever to P, stop the engine and lock the vehicle.
  Do not leave the vehicle unattended while the engine is running.
- Do not touch the exhaust pipes while the engine is running or immediately after turning the engine off.
  Doing so may cause burns.
- Do not leave the engine running in an area with snow build-up, or where it is snowing. If snowbanks build up around the vehicle while the engine is running, exhaust gases may collect and enter the vehicle. This may lead to death or a serious health hazard.

■ Exhaust gases

Exhaust gases include harmful carbon monoxide (CO), which is colorless and odorless. Inhaling exhaust gases may lead to death or a serious health hazard.

- If the vehicle is in a poorly ventilated area, stop the engine. In a closed area, such as a garage, exhaust gases may collect and enter the vehicle. This may lead to death or a serious health hazard.
- The exhaust system should be checked occasionally. If there is a hole or crack caused by corrosion, damage to a joint or abnormal exhaust noise, be sure to have the vehicle inspected and repaired by your Toyota dealer. Failure to do so may allow exhaust gases to enter the vehicle, resulting in death or a serious health hazard.

CAUTION

When taking a nap in the vehicle

Always turn the engine off. Otherwise, if you accidentally move the shift lever or depress the accelerator pedal, this could cause an accident or fire due to engine overheating. Additionally, if the vehicle is parked in a poorly ventilated area, exhaust gases may collect and enter the vehicle, leading to death or a serious health hazard.

When braking

- When the brakes are wet, drive more cautiously.
  Braking distance increases when the brakes are wet, and this may cause one side of the vehicle to brake differently than the other side. Also, the parking brake may not securely hold the vehicle.
- If the power brake assist function does not operate, do not follow other vehicles closely and avoid hills or sharp turns that require braking.
  In this case, braking is still possible, but the brake pedal should be depressed more firmly than usual. Also, the braking distance will increase.
- Do not pump the brake pedal if the engine stalls.
  Each push on the brake pedal uses up the reserve for the power-assisted brakes.
- The brake system consists of 2 individual hydraulic systems; if one of the systems fails, the other will still operate. In this case, the brake pedal should be depressed more firmly than usual and the braking distance will increase.
  If this happens, do not continue to drive the vehicle. Have your brakes fixed immediately.

NOTICE

When driving the vehicle

- Do not depress the accelerator and brake pedals at the same time during driving. If the brake pedal is depressed while driving with the accelerator pedal depressed, driving torque may be restrained.
- Do not use the accelerator pedal or depress the accelerator and brake pedals at the same time to hold the vehicle on a hill.

When parking the vehicle

Always shift the shift lever to P. Failure to do so may cause the vehicle to move or the vehicle may accelerate suddenly if the accelerator pedal is accidentally depressed.

Avoiding damage to vehicle parts

- Do not turn the steering wheel fully in either direction and hold it there for an extended period of time.
  Doing so may damage the power steering pump.
- When driving over bumps in the road, drive as slowly as possible to avoid damaging the wheels, underside of the vehicle, etc.

If you get a flat tire while driving

A flat or damaged tire may cause the following situations. Hold the steering wheel firmly and gradually depress the brake pedal to slow down the vehicle.

- It may be difficult to control your vehicle.
- The vehicle will make abnormal sounds or vibrations.
- The vehicle will lean abnormally.

Information on what to do in case of a flat tire (→P. 578)

NOTICE

When encountering flooded roads

Do not drive on a road that has flooded after heavy rain etc. Doing so may cause the following serious damage to the vehicle:

- Engine stalling
- Short in electrical components
- Engine damage caused by water immersion

In the event that you drive on a flooded road and the vehicle is flooded, be sure to have your Toyota dealer check the following:

- Brake function
- Changes in quantity and quality of oil and fluid used for the engine, transmission, transfer (4WD models), differentials, etc.
- Lubricant condition for the propeller shaft, bearings and suspension joints (where possible), and the function of all joints, bearings, etc.

■ Starting the engine

STEP 1 Check that the parking brake is set.

STEP 2 Check that the shift lever is set in P.

STEP 3 Firmly depress the brake pedal.

STEP 4 Turn the engine switch to the “START” position to start the engine.

■ Changing the engine switch positions

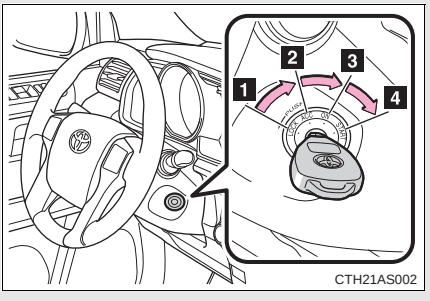

1 “LOCK”

The steering wheel is locked and the key can be removed. (The key can be removed only when the shift lever is in P.)

2 “ACC”

Some electrical components such as the audio system can be used.

3 “ON”

All electrical components can be used.

4 “START”

For starting the engine.

Turning the key from “ACC” to “LOCK”

STEP 1 Shift the shift lever to P.

STEP 2

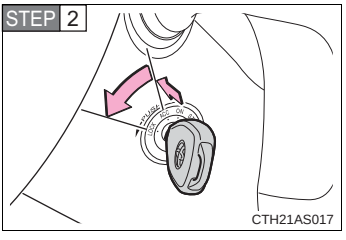

Push in the key and turn to the “LOCK” position.

If the engine does not start

The engine immobilizer system may not have been deactivated. (→P. 106)

When the steering lock cannot be released

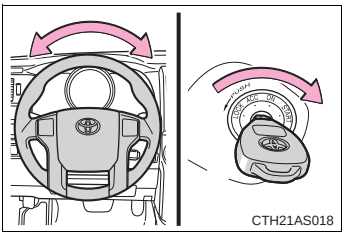

When starting the engine, the engine switch may seem stuck in the “LOCK” position. To free it, turn the key while turning the steering wheel slightly left and right.

Key reminder function

A buzzer sounds if the driver’s door is opened, while the engine switch is in the “LOCK” or “ACC” position to remind you to remove the key.

CAUTION

When starting the engine

Always start the engine while sitting in the driver's seat. Do not depress the accelerator pedal while starting the engine under any circumstances.
Doing so may cause an accident resulting in death or serious injury.

Caution when driving

Do not turn the engine switch to the “LOCK” position while driving. If, in an emergency, you must turn the engine off while the vehicle is moving, turn the engine switch only to the “ACC” position to stop the engine. An accident may result if the engine is stopped while driving.

NOTICE

To prevent battery discharge

Do not leave the engine switch in the “ACC” or “ON” position for long periods of time without the engine running.

When starting the engine

- Do not crank the engine for more than 30 seconds at a time. This may overheat the starter and wiring systems.
- Do not race a cold engine.
- If the engine becomes difficult to start or stalls frequently, have the engine checked immediately.

Performing the following operations when carrying the electronic key on your person starts the engine or changes "ENGINE START STOP" switch modes.

■ Starting the engine

STEP 1 Check that the parking brake is set.

STEP 2 Check that the shift lever is set in P.

STEP 3 Firmly depress the brake pedal.

The "ENGINE START STOP" switch indicator will turn green. If the indicator does not turn green, the engine cannot be started.

STEP 4

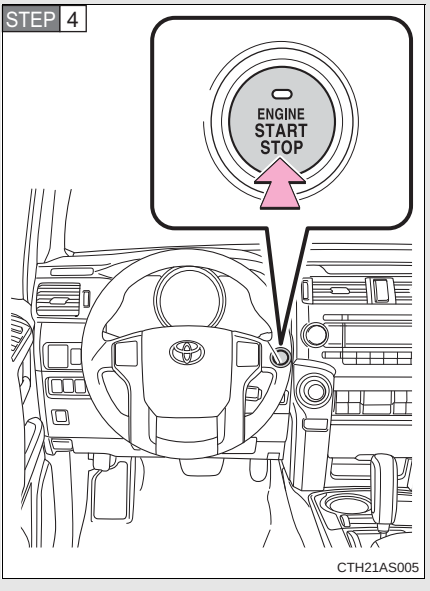

Press the "ENGINE START STOP" switch.

The engine will crank until it starts or for up to 30 seconds, whichever is less.

Continue depressing the brake pedal until the engine is completely started.

The engine can be started from any mode.

■ Stopping the engine

STEP 1 Stop the vehicle.

STEP 2 Shift the shift lever to P.

STEP 3 Set the parking brake. (→P. 180)

STEP 4 Press the "ENGINE START STOP" switch.

STEP 5 Release the brake pedal and check that the indicator on the "ENGINE START STOP" switch is off.

■ Changing “ENGINE START STOP” switch modes

Modes can be changed by pressing the “ENGINE START STOP” switch with brake pedal released. (The mode changes each time the switch is pressed.)

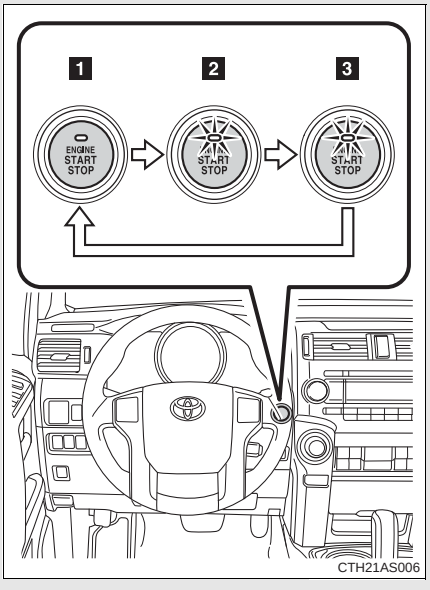

1 Off*

The emergency flashers can be used.

2 ACCESSORY mode

Some electrical components such as the audio system can be used.

The “ENGINE START STOP” switch indicator turns amber.

3 IGNITION ON mode

All electrical components can be used.

The “ENGINE START STOP” switch indicator turns amber.

*: If the shift lever is in a position other than P when turning off the engine, the “ENGINE START STOP” switch will be turned to ACCESSORY mode, not to off.

When stopping the engine with the shift lever in a position other than P

If the engine is stopped with the shift lever in a position other than P, the “ENGINE START STOP” switch will not be turned off but instead be turned to ACCESSORY mode. Perform the following procedure to turn the switch off:

STEP 1 Check that the parking brake is set.

STEP 2 Shift the shift lever to P.

STEP 3 Check that the indicator on the “ENGINE START STOP” switch is illuminated in amber and then press the “ENGINE START STOP” switch once.

STEP 4 Check that the indicator on the “ENGINE START STOP” switch is off.

■ Auto power off function

If the vehicle is left in ACCESSORY or IGNITION ON mode (the engine is not running) for more than an hour with the shift lever in P, the “ENGINE START STOP” switch will automatically turn off. However, this function cannot entirely prevent battery discharge. Do not leave the vehicle with the “ENGINE START STOP” switch in ACCESSORY or IGNITION ON mode for long periods of time when the engine is not running.

■ Operation of the “ENGINE START STOP” switch

When operating the “ENGINE START STOP” switch, one short, firm press is enough. If the switch is pressed improperly, the engine may not start or the “ENGINE START STOP” switch mode may not change. It is not necessary to press and hold the switch.

■ Electronic key battery depletion

→P. 44

■ Conditions affecting operation

→P. 41

■ Note for the entry function

→P. 33

■ **If the engine does not start**

The engine immobilizer system may not have been deactivated. (→P. 106)

■ **Steering lock**

After turning the “ENGINE START STOP” switch off and opening and closing the doors, the steering wheel will be locked due to the steering lock function. Operating the “ENGINE START STOP” switch again automatically cancels the steering lock.

■ **When the steering lock cannot be released**

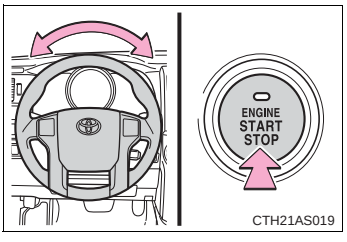

The green indicator light on the “ENGINE START STOP” switch will flash. Press the “ENGINE START STOP” switch again while turning the steering wheel left and right.

■ **Steering lock motor overheating prevention**

To prevent the steering lock motor from overheating, the motor may be suspended if the engine is turned on and off repeatedly in a short period of time. In this case, refrain from operating the engine. After about 10 seconds, the steering lock motor will resume functioning.

■ **When the “ENGINE START STOP” switch indicator flashes in amber**

The system may be malfunctioning. Have the vehicle inspected by your Toyota dealer immediately.

■ **If the electronic key battery is depleted**

→P. 528

CAUTION

When starting the engine

Always start the engine while sitting in the driver's seat. Do not depress the accelerator pedal while starting the engine under any circumstances.
Doing so may cause an accident resulting in death or serious injury.

Caution while driving

If the vehicle begins to slide due to engine failure or other circumstances, do not lock or open the doors until the vehicle reaches a safe and complete stop. Activation of the steering lock in this circumstance may lead to an accident, resulting in death or serious injury.

Stopping the engine in an emergency

If you want to stop the engine in an emergency while driving the vehicle, press and hold the "ENGINE START STOP" switch for more than 3 seconds. However, do not touch the "ENGINE START STOP" switch while driving unless in an emergency. If the engine stops while driving, this could lead to an unexpected accident.

NOTICE

■ **To prevent battery discharge**

- Do not leave the “ENGINE START STOP” switch in ACCESSORY or IGNITION ON mode for long periods of time without the engine running.
- If the indicator on the “ENGINE START STOP” switch is illuminated, the “ENGINE START STOP” switch is not off. When exiting the vehicle, always check that the “ENGINE START STOP” switch is off.
- Do not stop the engine when the shift lever is in a position other than P. If the engine is stopped in another shift lever position, the “ENGINE START STOP” switch will not be turned off but instead be turned to ACCESSORY mode. If the vehicle is left in ACCESSORY mode, battery discharge may occur.

■ **When starting the engine**

- Do not race a cold engine.
- If the engine becomes difficult to start or stalls frequently, have the engine checked immediately.

■ **Symptoms indicating a malfunction with the “ENGINE START STOP” switch**

If the “ENGINE START STOP” seems to be operating somewhat differently than usual, such as the switch sticking slightly, there may be a malfunction. Contact your Toyota dealer immediately.

Select a shift position appropriate for the driving conditions.

■ Shifting the shift lever

Standard type

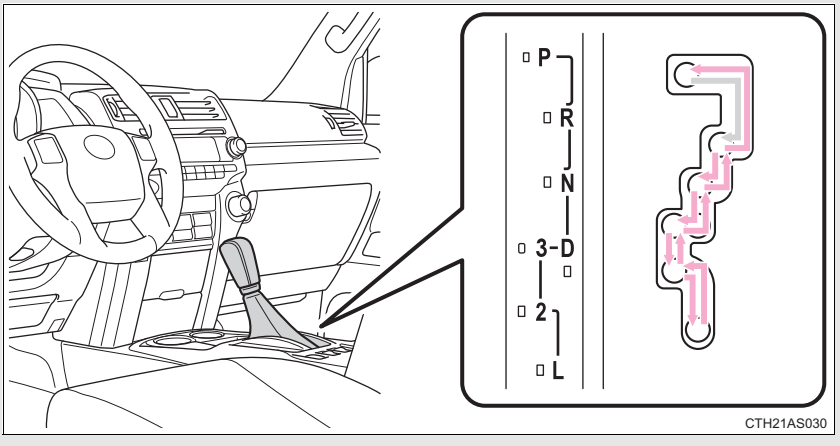

While the engine switch is in the “ON” position, move the shift lever with the brake pedal depressed.

When shifting the shift lever between P and D, make sure that the vehicle is completely stopped.

Multi-mode type

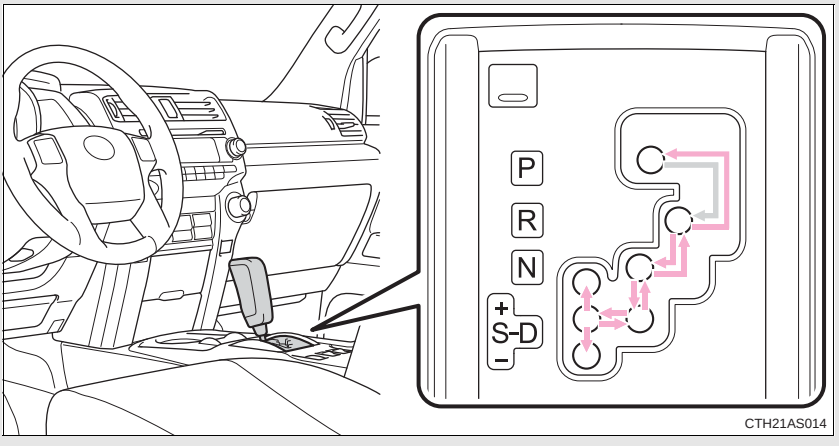

Vehicles without a smart key system:

While the engine switch is in the “ON” position, move the shift lever with the brake pedal depressed.

Vehicles with a smart key system:

While the “ENGINE START STOP” switch is in IGNITION ON mode, move the shift lever with the brake pedal depressed.

When shifting the shift lever between P and D, make sure that the vehicle is completely stopped.

■ Shift position purpose

Shift position	Function	
	Standard type	Multi-mode type
P	Parking the vehicle/ starting the engine	
R	Reversing	
N	Neutral	
D	Normal driving*1	
S	—	S mode driving*2 (→P. 176)
3	Position for engine braking	—
2	Position for more powerful engine braking	—
L	Position for maximum engine braking	—

*1: To improve fuel efficiency and reduce noises, set the shift lever in the D position for normal driving.

*2: Selecting shift ranges using S mode restricts the upper limit of the possible gear ranges, controls engine braking forces, and prevents unnecessary upshifting.

Changing shift ranges in S mode (multi-mode type)

When the shift lever is in the S position, the shift lever can be operated as follows:

Non-Optitron type meter

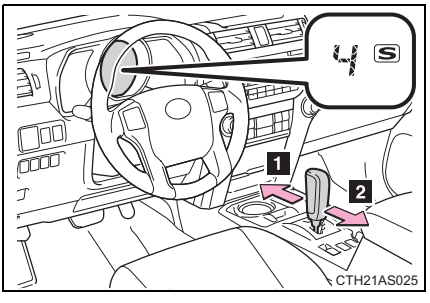

1 For upshifting

2 For downshifting

Optitron type meter

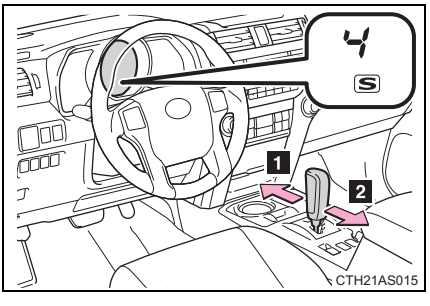

1 For upshifting

2 For downshifting

The initial shift range in S mode is set automatically to “4” according to vehicle speed. However, the initial shift range may be set to “3” if AI-SHIFT has operated while the shift lever was in the D position. (→P. 177)

■ Shift ranges and their functions

- You can choose from 5 levels of engine braking force.
- A lower shift range will provide greater engine braking force than a higher shift range, and the engine speed will also increase.

■ **Downshifting restrictions (standard type)**

The maximum allowable speeds are as follows.

Downshifting	Maximum speed mph (km/h)
3 → 2	67 (108)
2 → L	32 (52)

■ **S mode (multi-mode type)**

When the shift range is “3” or lower, holding the shift lever toward “+” sets the shift range to “5”.

■ **AI-SHIFT**

AI-SHIFT automatically selects the optimal gear according to driver performance and driving conditions.

Standard type

AI-SHIFT automatically operates when the shift lever is in the D position.

Multi-mode type

AI-SHIFT automatically operates when the shift lever is in the D position. (Shifting the shift lever to the S position cancels the function.)

■ **When driving with the cruise control system**

Standard type

The engine brake will not operate when downshifting from D to 3. (→P. 209)

Multi-mode type

Engine braking will not occur in S mode, even when downshifting to “4”. (→P. 209)

■ **If the shift lever cannot be shifted from P**

→P. 593

■ **If the “S” indicator does not come on even after shifting the shift lever to S (multi-mode type)**

This may indicate a malfunction in the automatic transmission system. Have the vehicle inspected by your Toyota dealer immediately.
(In this situation, the transmission will operate in the same manner as when the shift lever is in D.)

Downshift restriction warning buzzer (S mode in multi-mode type)

To help ensure safety and driving performance, downshifting operation may sometimes be restricted. In some circumstances, downshifting may not be possible even when the shift lever is operated. (A buzzer will sound twice.)

CAUTION

When driving on slippery road surfaces

Do not accelerate or shift gears suddenly.
Sudden changes in engine braking may cause the vehicle to spin or skid, resulting in an accident.

Turn signal lever

The turn signal lever can be used to show the following intentions of the driver:

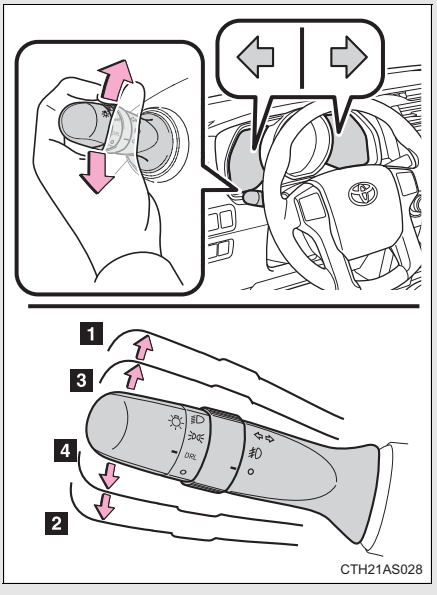

1 Right turn

2 Left turn

3 Lane change to the right (push and hold the lever partway)

The right hand signals will flash until you release the lever.

4 Lane change to the left (push and hold the lever partway)

The left hand signals will flash until you release the lever.

■ **Turn signals can be operated when**

Vehicles without a smart key system: The engine switch is in the “ON” position.

Vehicles with a smart key system: The “ENGINE START STOP” switch is in IGNITION ON mode.

■ **If the indicator flashes faster than usual**

Check that a light bulb in the front or rear turn signal lights has not burned out.

Parking brake

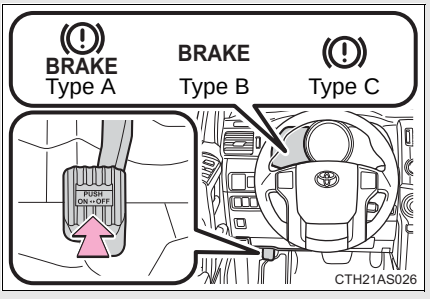

To set the parking brake, fully depress the parking brake pedal with your left foot while depressing the brake pedal with your right foot.
(Depressing the pedal again releases the parking brake.)

Usage in winter time

See “Winter driving tips” for parking brake usage in winter time. (→P. 275)

NOTICE

Before driving

Fully release the parking brake.
Driving the vehicle with the parking brake set will lead to brake components overheating, which may affect braking performance and increase brake wear.

Horn

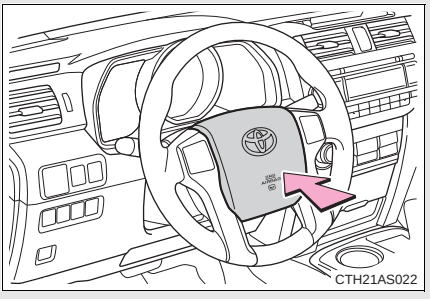

To sound the horn, press on or close to the mark.

■ After adjusting the steering wheel

Make sure that the steering wheel is securely locked.
The horn may not sound if the steering wheel is not securely locked.
(→P. 86)

Non-Optitron type meters

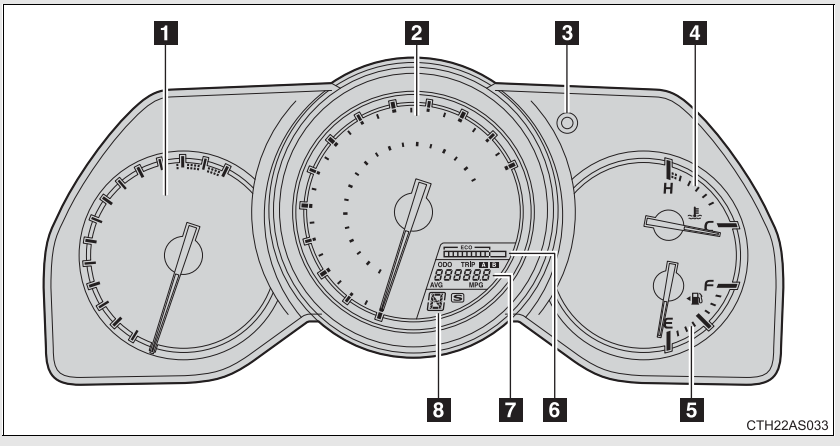

Optitron type meters

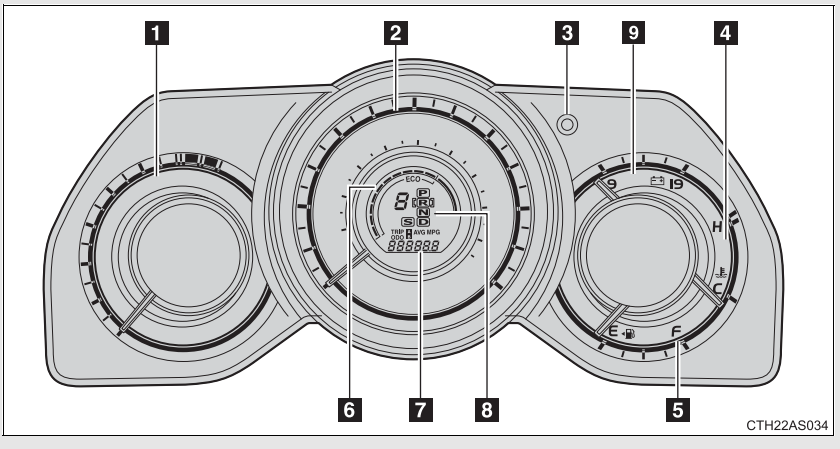

1 Tachometer

Displays the engine speed in revolutions per minute

2 Speedometer

Displays the vehicle speed

3 Display change button

→P. 184

4 Engine coolant temperature gauge

Displays the engine coolant temperature

5 Fuel gauge

Displays the quantity of fuel remaining in the tank

6 Eco Driving Indicator Zone Display

→P. 185

7 Odometer, trip meter and average fuel consumption display

→P. 184

8 Shift position and shift range indicators

→P. 173

9 Voltmeter

Displays the charge state

Switching the display

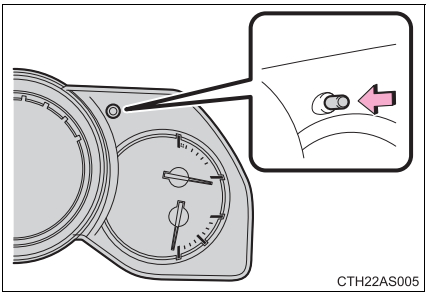

Items displayed can be switched by pressing the display change button.

Odometer

Displays the total distance the vehicle has been driven.

Trip meter

Displays the distance the vehicle has been driven since the meter was last reset. Trip meters “A” and “B” can be used to record and display different distances independently.

Pressing and holding the display change button will reset the trip meter that is currently displayed.

■ Eco Driving Indicator and average fuel consumption

Non-Optitron type meter

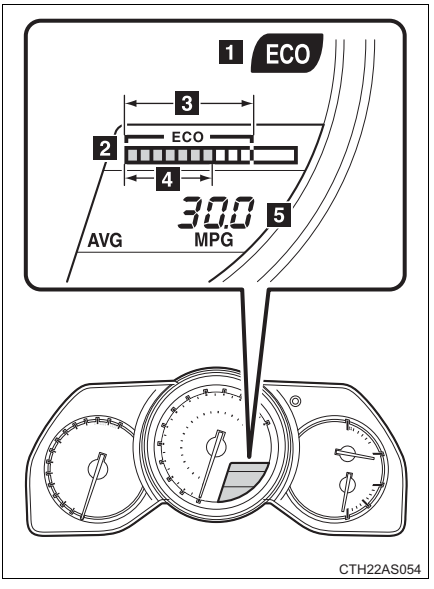

1 Eco Driving Indicator Light

During Eco-friendly acceleration (Eco driving), Eco Driving Indicator Light will turn on.

2 Eco Driving Indicator Zone Display

Suggests Zone of Eco driving with current Eco driving ratio based on acceleration.

3 Zone of Eco driving

4 Eco driving ratio based on acceleration

In case over-use of the accelerator causes the vehicle to exceed Zone of Eco driving, the right of Eco Driving Indicator Zone Display will blink and Eco Driving Indicator Light will turn off.

5 Average fuel consumption

Displays the average fuel consumption since the function was reset.

Pressing and holding the display change button will reset the average fuel consumption.

Optitron type meter

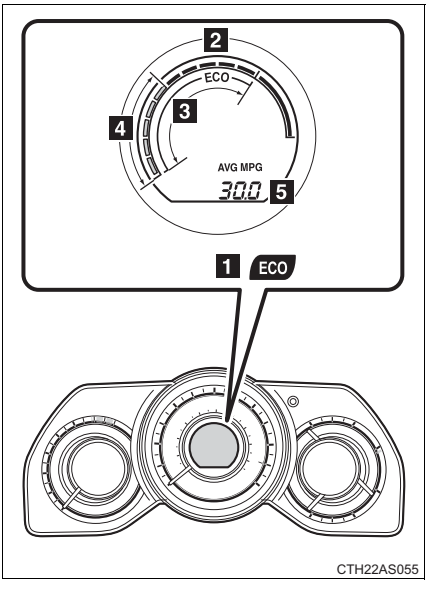

1 Eco Driving Indicator Light

During Eco-friendly acceleration (Eco driving), Eco Driving Indicator Light will turn on.

2 Eco Driving Indicator Zone Display

Suggests Zone of Eco driving with current Eco driving ratio based on acceleration.

3 Zone of Eco driving

4 Eco driving ratio based on acceleration

In case over-use of the accelerator causes the vehicle to exceed Zone of Eco driving, the right of Eco Driving Indicator Zone Display will blink and Eco Driving Indicator Light will turn off.

5 Average fuel consumption

Displays the average fuel consumption since the function was reset.

Pressing and holding the display change button will reset the average fuel consumption.

■ Eco Driving Indicator Light customization

Non-Optitron type meter

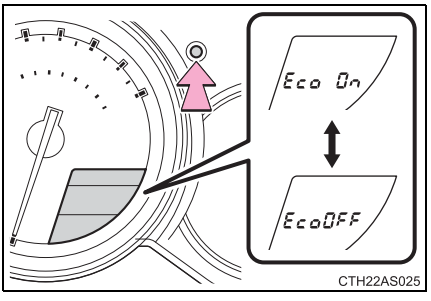

Eco Driving Indicator Light can be activated or deactivated by pressing and holding the display change button.

Optitron type meter

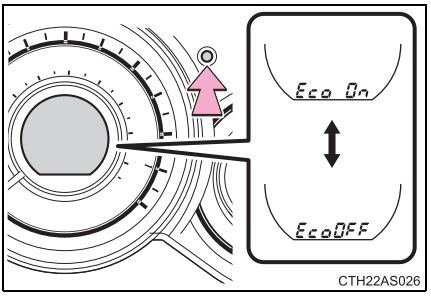

Eco Driving Indicator Light can be activated or deactivated by pressing and holding the display change button.

Instrument panel light control

The brightness of the instrument panel lights can be adjusted.

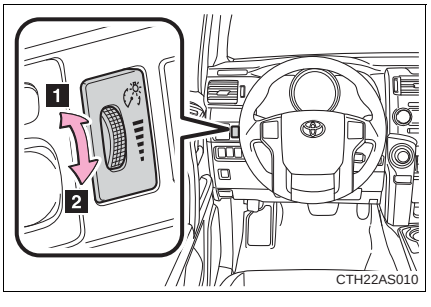

1 Brighter

2 Darker

■ **The meters and display illuminate when (Optitron type meter)**

Vehicles without a smart key system:
The engine switch is in the “ON” position.

Vehicles with a smart key system:
The “ENGINE START STOP” switch is in IGNITION ON mode.

■ **Eco Driving Indicator operates when**

The vehicle is being driven with the shift lever in D.

■ **When the average fuel consumption is reset**

The average fuel consumption displayed on the accessory meter and “Past Record” screen of the navigation system (if equipped) will be reset at the same time.

■ **The brightness of the instrument panel lights (Optitron type meter)**

When the headlight switch is turned to on, the brightness will be reduced slightly unless the control dial is turned fully upward.

NOTICE

■ **To prevent damage to the engine and its components**

- Do not let the indicator needle of the tachometer enter the red zone, which indicates the maximum engine speed.
- The engine may be overheating if the engine coolant temperature gauge is in the red zone (H). In this case, immediately stop the vehicle in a safe place, and check the engine after it has cooled completely. (→P. 604)

■ **While driving (Optitron type meter)**

When the voltmeter indicates more than 19 V or less than 9 V, the battery may be malfunctioning. Have your vehicle checked at your Toyota dealer.

Indicators and warning lights

The indicator and warning lights on the instrument cluster and center panel inform the driver of the status of the vehicle's various systems.

Instrument cluster (non-Optitron type meter)

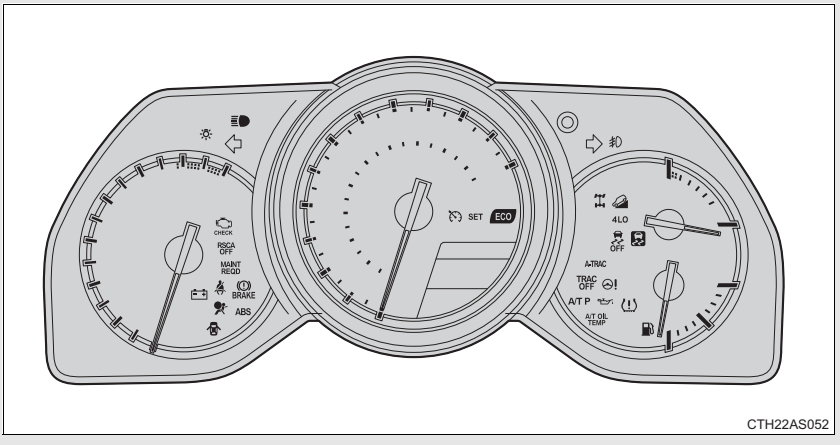

CTH22AS052

Instrument cluster (Optitron type meter)

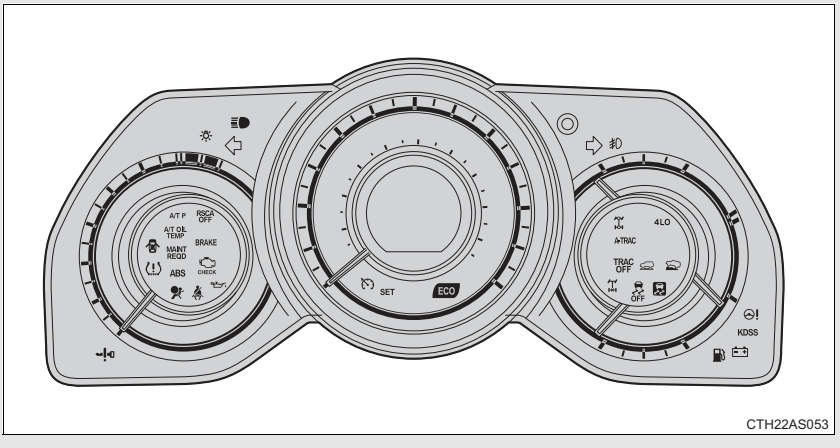

CTH22AS053

Center panel

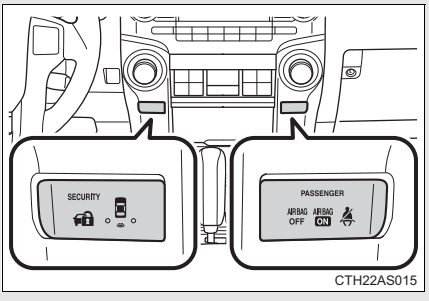

Indicators

The indicators inform the driver of the operating state of the vehicle's various systems.

Turn signal indicator (→P. 179)	
Headlight high beam indicator (→P. 202)	
Headlight indicator (→P. 198) (U.S.A.)	
Tail light indicator (→P. 198) (Canada)	
Front fog light indicator (→P. 204) (if equipped)	
Cruise control indicator (→P. 209)	
Cruise control set indicator (→P. 209)	
* Slip indicator (→P. 254)	
* VSC off indicator (→P. 255)	
* "TRAC OFF" indicator (→P. 255) (U.S.A.)	
* "TRC OFF" indicator (→P. 255) (Canada)	
* Roll sensing of curtain shield airbags off indicator (→P. 128)	
Four-wheel drive indicator (→P. 223) (if equipped)	
* Downhill assist control system indicator (→P. 238) (if equipped)	
Low speed four-wheel drive indicator (→P. 223, 226) (if equipped)	
Rear differential lock indicator (→P. 235) (if equipped)	
Center differential lock indicator (→P. 226) (if equipped)	
"A-TRAC" indicator (→P. 230) (if equipped)	
* "AUTO LSD" indicator (→P. 232) (if equipped)	
Multi-terrain Select indicator (→P. 245) (if equipped)	

*
(if equipped)

Crawl Control indicator (→P. 241)

Security indicator (→P. 106, 109)

*

Eco Driving Indicator Light (→P. 185)

(if equipped)

Intuitive parking assist indicator (→P. 213)

*

SRS airbag on-off indicator (→P. 130)

*: These lights turn on when the “ENGINE START STOP” switch is turned to IGNITION ON mode (vehicles with a smart key system) or the engine switch is turned to the “ON” position (vehicles without a smart key system) to indicate that a system check is being performed. They will turn off after the engine is started, or after a few seconds. There may be a malfunction in a system if a light does not come on, or if the lights do not turn off. Have the vehicle inspected by your Toyota dealer.

Warning lights

Warning lights inform the driver of malfunctions in any of the vehicle's systems. (→P. 565)

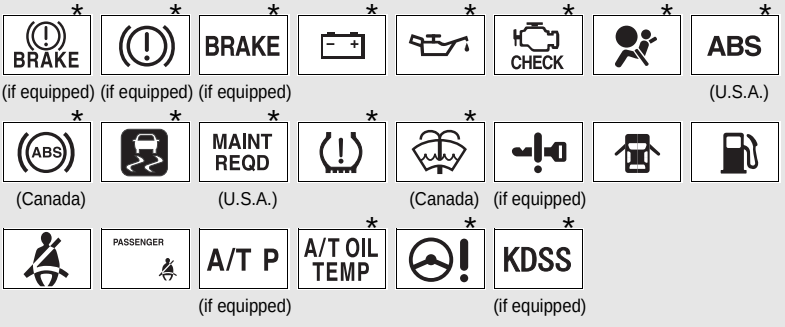

*: These lights turn on when the "ENGINE START STOP" switch is turned to IGNITION ON mode (vehicles with a smart key system) or the engine switch is turned to the "ON" position (vehicles without a smart key system) to indicate that a system check is being performed. They will turn off after the engine is started, or after a few seconds. There may be a malfunction in a system if a light does not come on, or if the lights do not turn off. Have the vehicle inspected by your Toyota dealer.

CAUTION

If a safety system warning light does not come on

Should a safety system light such as the ABS or SRS warning light not come on when you start the engine, this could mean that these systems are not available to help protect you in an accident, which could result in death or serious injury. Have the vehicle inspected by your Toyota dealer immediately if this occurs.

Accessory meter

The accessory meter presents the driver with a variety of driving-related data including the current outside air temperature.

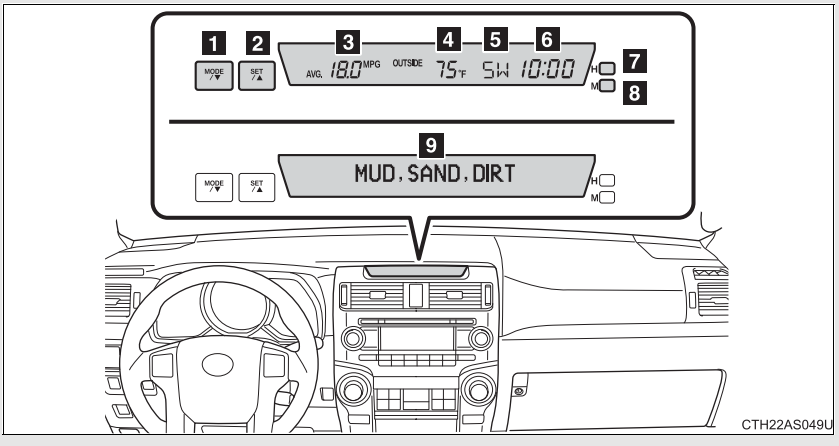

1 “MODE/▼” button

2 “SET/▲” button

3 Trip information (→P. 195)

Displays driving range and average fuel consumption

4 Outside temperature display (→P. 433)

5 Compass (→P. 450)

6 Clock (→P. 431)

7 H (Hour) button (→P. 431)

8 M (Minute) button (→P. 431)

9 Multi-terrain Select display (→P. 245)

Automatically displayed when using Multi-terrain Select

Trip information

Items displayed can be switched by pressing the “MODE/▼” button.

■ Driving range

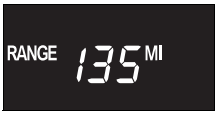

(vehicles without Multi-terrain Select)

(vehicles with Multi-terrain Select)

Displays the estimated maximum distance that can be driven with the quantity of fuel remaining

- This distance is computed based on your average fuel consumption. As a result, the actual distance that can be driven may differ from that displayed.
- When only a small amount of fuel is added to the tank, the display may not be updated.

■ Average fuel consumption

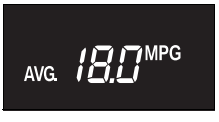

(vehicles without Multi-terrain Select)

(vehicles with Multi-terrain Select)

Displays the average fuel consumption since the function was reset

Pressing and holding the “SET/▲” button will reset the average fuel consumption.

Accessory meter light control

The daytime brightness of the accessory meter can be adjusted.

STEP 1 Turn the headlight switch off.

STEP 2 Press and hold the “MODE/▼” button.

STEP 3 Press the “MODE/▼” or “SET/▲” button.

Vehicles without Multi-terrain Select

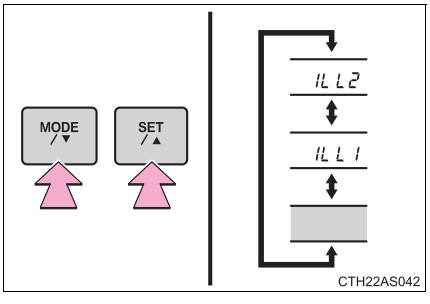

Vehicles with Multi-terrain Select

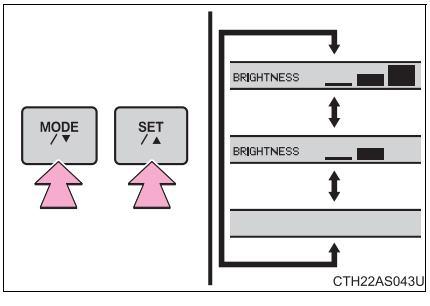

STEP 4 Press and hold the “SET/▲” button.

■When the average fuel consumption is reset

The average fuel consumption displayed on the instrument cluster and “Past Record” screen of the navigation system (if equipped) will be reset at the same time.

■Adjusting the brightness of the accessory meter

- If left idle for approximately 6 seconds or more while adjusting, the display will revert to the trip information display.
- When the parking lights are on, the brightness of the accessory meter can be adjusted only with the instrument panel light control.
- If the “MODE/▼” button is pressed and held when the accessory meter light control is displayed, the display will switch to compass calibration. (→P. 450)

■Liquid crystal display

Small spots or light spots may appear on the display. This phenomenon is characteristic of liquid crystal displays, and there is no problem with continuing to use the display.

⚠ NOTICE

■The accessory meter at low temperatures

Allow the interior of the vehicle to warm up before using the liquid crystal display. At extremely low temperatures, the display monitor may respond slowly, and display changes may be delayed.

Headlight switch

The headlights can be operated manually or automatically.

Turning the end of the lever turns on the lights as follows:

Type A

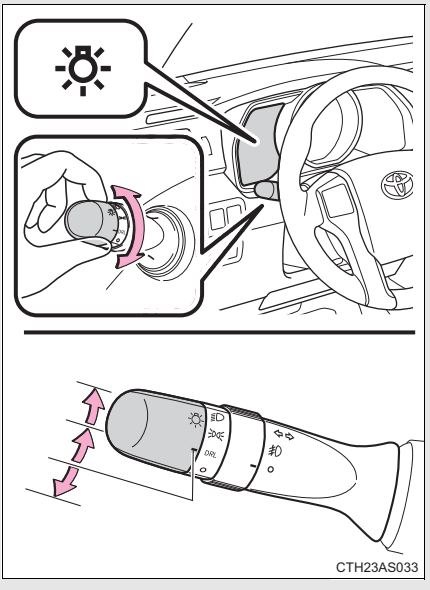

DRL	The daytime running lights turn on.
	The side marker, parking, tail, license plate, daytime running lights and instrument panel lights turn on.
	The headlights and all the lights listed above turn on.
O	The daytime running lights turn off.

Type B

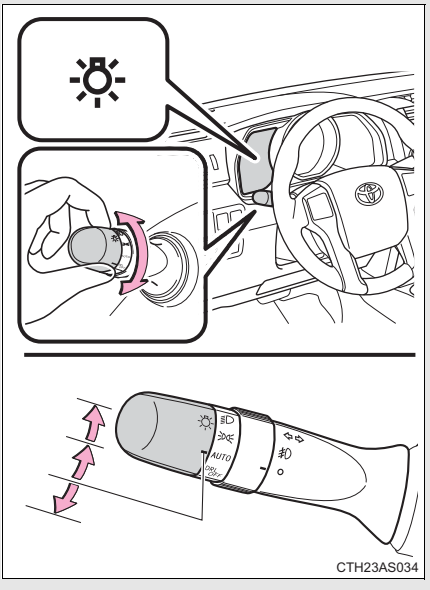

AUTO	The headlights, parking lights, daytime running lights and so on turn on and off automatically (when the “ENGINE START STOP” switch is in IGNITION ON mode).
	The side marker, parking, tail, license plate, daytime running lights and instrument panel lights turn on.
	The headlights and all the lights listed above turn on.
DRL OFF	The daytime running lights turn off.

Type C

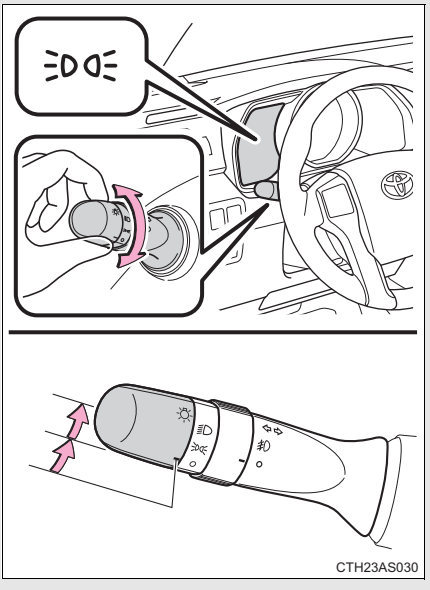

The daytime running lights turn on.

The side marker, parking, tail, license plate and instrument panel lights turn on.

The headlights and all the lights listed above turn on.

Type D

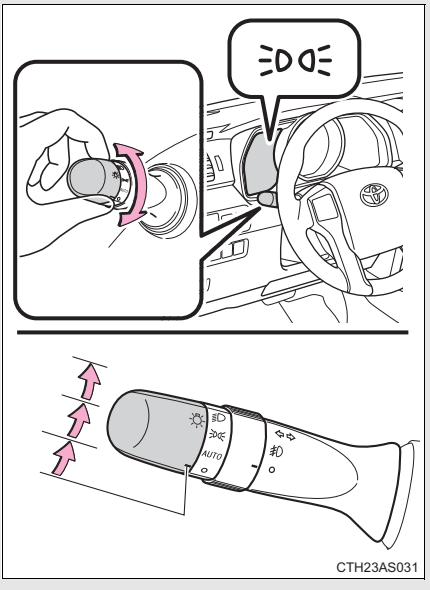

	The daytime running lights turn on.
AUTO	The headlights, parking lights, daytime running lights and so on turn on and off automatically (when the “ENGINE START STOP” switch is in IGNITION ON mode).
	The side marker, parking, tail, license plate, daytime running lights and instrument panel lights turn on.
	The headlights and all the lights listed above turn on.

Turning on the high beam headlights

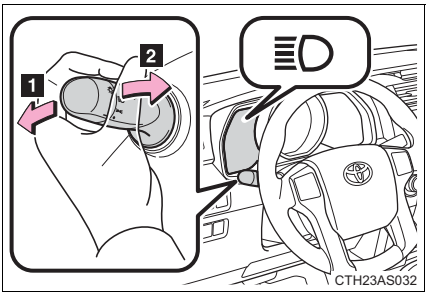

1 With the headlights on, push the lever away from you to turn on the high beams.

Pull the lever toward you to the center position to turn the high beams off.

2 Pull the lever toward you and release it to flash the high beams once.

You can flash the high beams with the headlights on or off.

Daytime running light system

- To make your vehicle more visible to other drivers, the daytime running lights turn on automatically whenever the engine is started and the parking brake is released. Daytime running lights are not designed for use at night.
  Type A and B: Daytime running lights can be turned off by operating the switch.
- Compared to turning on the headlights, the daytime running light system offers greater durability and consumes less electricity, so it can help improve fuel economy.

Headlight control sensor (if equipped)

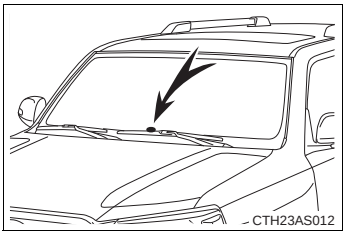

The sensor may not function properly if an object is placed on the sensor, or anything that blocks the sensor is affixed to the windshield.
Doing so interferes with the sensor detecting the level of ambient light and may cause the automatic headlight system to malfunction.

■Automatic light off system

Vehicles without a smart key system

- When the headlights come on: The headlights and tail lights turn off 30 seconds after a door is opened and closed if the engine switch is turned to the “ACC” or “LOCK” position. (The lights turn off immediately if on the key is pressed after all the doors are locked.)
- When only the tail lights come on: The tail lights turn off automatically if the engine switch is turned to the “ACC” or “LOCK” position and the driver’s door is opened.

To turn the lights on again, turn the engine switch to the “ON” position, or turn the lights off and then back to or .

Vehicles with a smart key system

- When the headlights come on: The headlights and tail lights turn off 30 seconds after a door is opened and closed if the “ENGINE START STOP” switch is turned to ACCESSORY mode or turned off. (The lights turn off immediately if on the key is pressed after all the doors are locked.)
- When only the tail lights come on: The tail lights turn off automatically if the “ENGINE START STOP” switch is turned off and the driver’s door is opened.

To turn the lights on again, turn the “ENGINE START STOP” switch to IGNITION ON mode, or turn the light switch off and then back to or .

■Customization that can be configured at Toyota dealer

Settings (e.g. light sensor sensitivity) can be changed.
(Customizable features →P. 640)

NOTICE

■To prevent battery discharge

Do not leave the lights on longer than necessary when the engine is not running.

Fog light switch*

The fog lights secure excellent visibility in difficult driving conditions, such as in rain and fog.

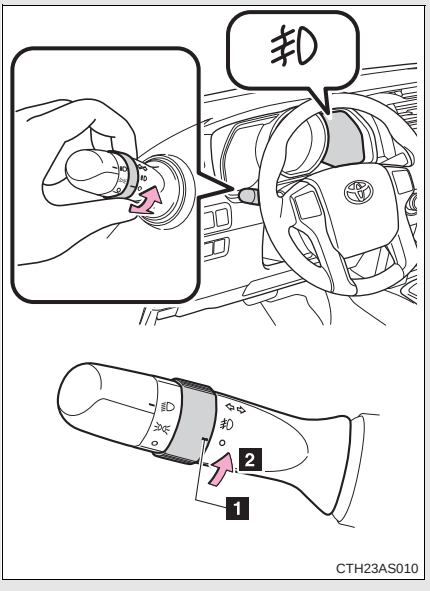

1 Turns the front fog lights off

2 Turns the front fog lights on

■ Fog lights can be used when

The headlights are on in low beam.

*: If equipped

When intermittent windshield wiper operation is selected, the wiper interval can be adjusted.

The wiper operation is selected by moving the lever as follows.

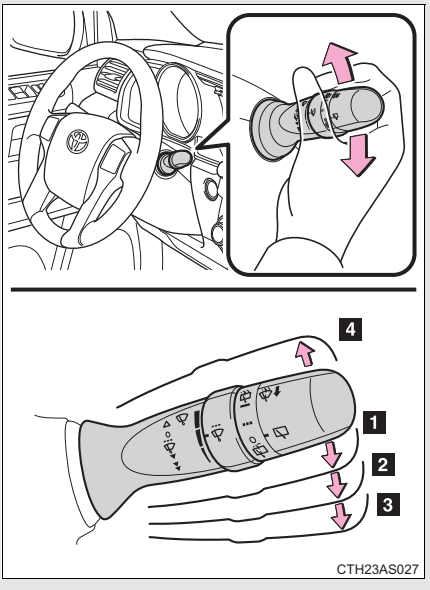

1 Intermittent windshield wiper operation

2 Low speed windshield wiper operation

3 High speed windshield wiper operation

4 Temporary operation

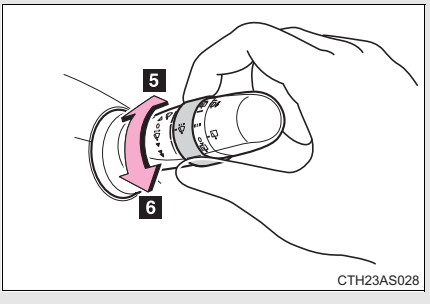

5 Increases the intermittent windshield wiper frequency

6 Decreases the intermittent windshield wiper frequency

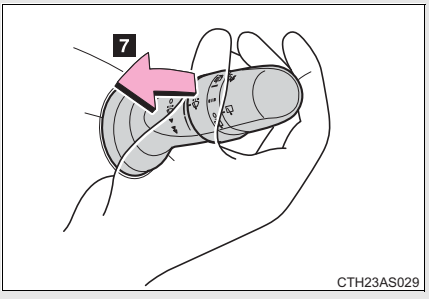

7 Washer/wiper dual operation

The wipers will automatically operate a couple of times after the washer squirts.

■ **The windshield wipers and washer can be operated when**

Vehicles without a smart key system: The engine switch is in the “ON” position.

Vehicles with a smart key system: The “ENGINE START STOP” switch is in IGNITION ON mode.

■ **If no windshield washer fluid sprays**

Check that the washer nozzles are not blocked if there is washer fluid in the windshield washer fluid reservoir.

⚠ NOTICE

■ **When the windshield is dry**

Do not use the wipers, as they may damage the windshield.

■ **When the washer fluid tank is empty**

Do not operate the switch continually as the washer fluid pump may overheat.

■ **When a nozzle becomes blocked**

Do not try to clear it with a pin or other object. The nozzle will be damaged.

Rear window wiper and washer

Before operating the rear window wiper and washer switch, make sure the back window is completely closed. (→P. 94)
The wiper operation is selected by moving the lever as follows:

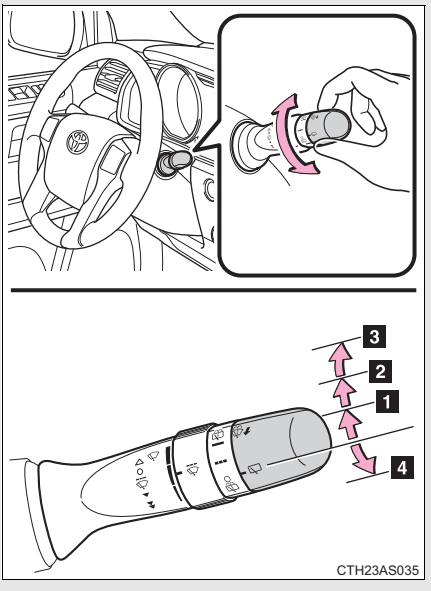

1 Intermittent window wiper operation

2 Normal window wiper operation

3 Washer/wiper dual operation

4 Washer/wiper dual operation

The wiper will automatically operate a couple of times after the washer squirts.
(After operating several times, the wiper operates one more time after a short delay to prevent dripping.)

■ **The rear window wiper and washer can be operated when**

- Vehicles without a smart key system: The engine switch is in the “ON” position.

  Vehicles with a smart key system: The “ENGINE START STOP” switch is in IGNITION ON mode.
- The back window is completely closed.

■ **Intermittent window wiper operation**

- When intermittent window wiper operation mode is selected, the wiper will operate a couple of times and then switch to intermittent operation.
- During intermittent operation, the wiper stops temporarily at the reversing position.

When the rear window wiper and washer switch is turned off

The rear wiper will stop operation, and return to the retracted position after approximately 3 seconds.
However, if the engine switch is turned to the “ACC” or “LOCK” position (vehicles without a smart key system) or the “ENGINE START STOP” switch is turned to ACCESSORY mode or turned off (vehicles with a smart key system) while the rear wiper is operating, the rear wiper will stop at that position and will not return to the retracted position.

If no washer fluid sprays

Check that the washer nozzle is not blocked if there is washer fluid in the washer fluid reservoir.

Customization that can be configured at Toyota dealer

Settings (e.g. drip prevention function) can be changed.
(Customizable features →P. 640)

NOTICE

When the rear window is dry

Do not use the wiper, as it may damage the rear window.

When the washer fluid tank is empty

Do not operate the switch continually as the washer fluid pump may overheat.

When a nozzle becomes blocked

Do not try to clear it with a pin or other object. The nozzle will be damaged.

Use cruise control to maintain a set speed without depressing the accelerator pedal.

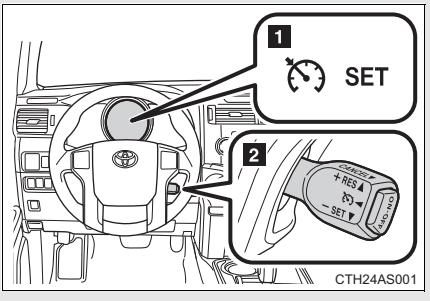

1 Indicators

2 Cruise control switch

■ Setting the vehicle speed

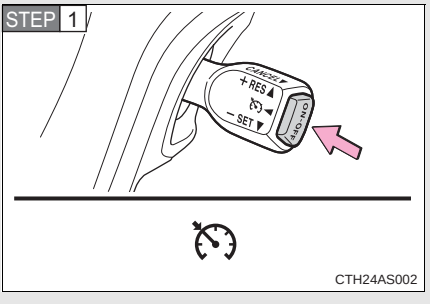

Press the “ON-OFF” button to activate the cruise control.

Press the button again to deactivate the cruise control.

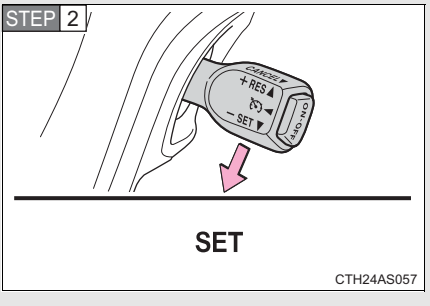

Accelerate or decelerate to the desired speed, and push the lever down to set the speed.

Adjusting the set speed

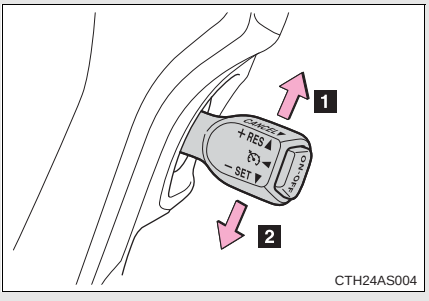

1 Increases the speed

2 Decreases the speed

Hold the lever until the desired speed setting is obtained.

Fine adjustment of the set speed can be made by lightly pushing the lever up or down and releasing it.

Canceling and resuming the constant speed control

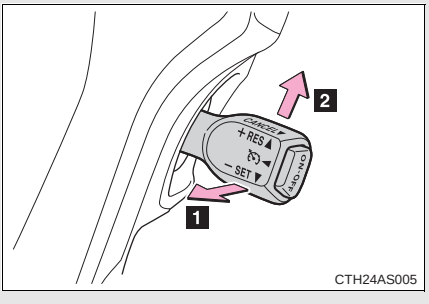

1 Pulling the lever toward you cancels the constant speed control.

The speed setting is also canceled when the brakes are applied.

2 Pushing the lever up resumes the constant speed control.

■ **Cruise control can be set when**

- The shift lever is in D or “3” (standard type), or in D, or “4” or “5” range of S has been selected (multi-mode type).
- Vehicle speed is above 25 mph (40 km/h).

■ **Accelerating**

The vehicle can be accelerated normally. After acceleration, the set speed resumes.

■ **Automatic cruise control cancelation**

Cruise control will stop maintaining the vehicle speed in any of the following situations:

- Actual vehicle speed falls more than 10 mph (16 km/h) below the preset vehicle speed.
  At this time, the memorized set speed is not retained.
- Actual vehicle speed is below 25 mph (40 km/h).
- VSC is activated.

■ **If the cruise control indicator light flashes**

Press the “ON-OFF” button once to deactivate the system, and then press the button again to reactivate the system.
If the cruise control speed cannot be set or if the cruise control cancels immediately after being activated, there may be a malfunction in the cruise control system. Have the vehicle inspected by your Toyota dealer.

CAUTION

■ **To avoid operating the cruise control by mistake**

Switch the cruise control off using the “ON-OFF” button when not in use.

■ **Situations unsuitable for cruise control**

Do not use cruise control in any of the following situations.
Doing so may result in loss of control and could cause an accident resulting in death or serious injury.

- In heavy traffic
- On roads with sharp bends
- On winding roads
- On slippery roads, such as those covered with rain, ice or snow
- On steep hills
  Vehicle speed may exceed the set speed when driving down a steep hill.
- When your vehicle is towing anything

Intuitive parking assist*

The distance from your vehicle to nearby obstacles when parallel parking or maneuvering into a garage is measured by the sensors and communicated via an indicator and a buzzer. Always check the surrounding area when using this system.

■ Types of sensors

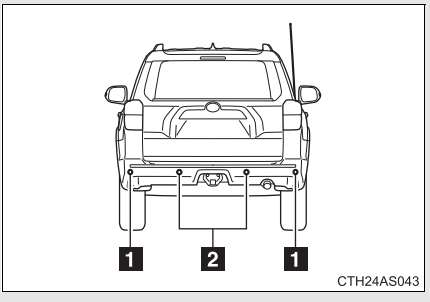

1 Rear corner sensors

2 Rear center sensors

■ Intuitive parking assist switch

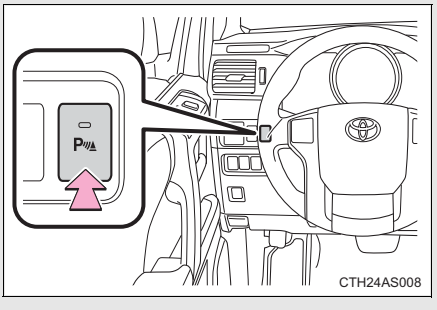

Turns the intuitive parking assist on/off

When on, the indicator light comes on and the buzzer sounds to inform the driver that the system is operational.

*: If equipped

The indicator and buzzer

When a sensor detects an obstacle, the direction of the obstacle is indicated and the buzzer sounds.

Sensor operation and distance to an obstacle

The system operates when the vehicle approaches an obstacle, as shown by the following table.

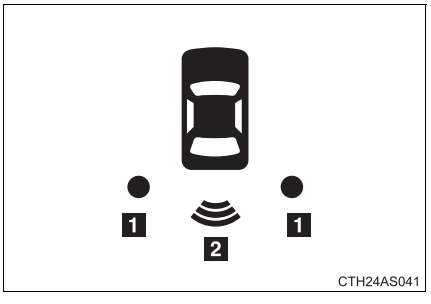

1 Rear corner sensors

Distance to an obstacle ft. (cm)	Indicator and buzzer
Approximately 1.6 - 1.2 (50 - 37.5)	Intermittent
Approximately 1.2 - 0.8 (37.5 - 25)	Fast intermittent
Approximately 0.8 or less (25 or less)	Continuously

2 Rear center sensors

Distance to an obstacle ft. (cm)	Indicator and buzzer
Approximately 4.9 - 2.0 (150 - 60)	Intermittent
Approximately 2.0 - 1.5 (60 - 45)	Fast intermittent
Approximately 1.5 - 1.2 (45 - 35)	Very fast intermittent
Approximately 1.2 or less (35 or less)	Continuously

Detection range of the sensors

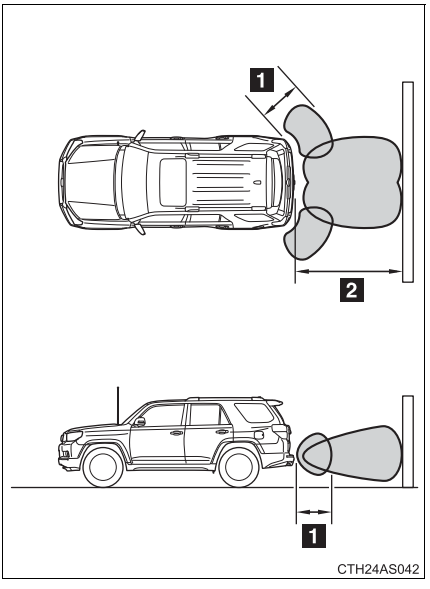

1 Approximately 1.6 ft. (50 cm)

2 Approximately 4.9 ft. (150 cm)

The diagram shows the detection range of the sensors. Note that the sensors cannot detect obstacles that are extremely close to the vehicle.

The range of the sensors may change depending on the shape of the object etc.

Intuitive parking assist can be operated when

Vehicles without a smart key system: The engine switch is in the “ON” position and the shift lever is in R.

Vehicles with a smart key system: The “ENGINE START STOP” switch is in IGNITION ON mode and the shift lever is in R.

Sensor detection information

- Certain vehicle conditions and the surrounding environment may affect the ability of a sensor to correctly detect an obstacle. Particular instances where this may occur are listed below.
  - There is dirt, snow or ice on a sensor.
  - A sensor is frozen.
  - A sensor is covered in any way.
  - The vehicle is leaning considerably to one side.
  - On an extremely bumpy road, on an incline, on gravel, or on grass
  - The vicinity of the vehicle is noisy due to vehicle horns, motorcycle engines, air brakes of large vehicles, or other loud noises producing ultrasonic waves.
  - There is another vehicle equipped with parking assist sensors in the vicinity.
  - A sensor is coated with a sheet of spray or heavy rain.
  - A bumper or sensor receives a strong impact.
  - The vehicle is approaching a tall or right-angled curb.
  - In harsh sunlight or intense cold weather
  - A non-genuine Toyota suspension (lowered suspension etc.) is installed.

In addition to the examples above, there are instances in which, because of their shape, signs and other objects may be judged by a sensor to be closer than they are.

- The shape of the obstacle may prevent a sensor from detecting it. Pay particular attention to the following obstacles:
  - Wires, fences, ropes, etc.
  - Cotton, snow and other materials that absorb sound waves
  - Sharply-angled objects
  - Low obstacles
  - Tall obstacles with upper sections projecting outwards in the direction of your vehicle

When the system malfunctions

If a malfunction occurs and no obstacles have been detected, the indicator flashes and the buzzer sounds for approximately 7 seconds.
If the indicator comes on and stays on after that, have the vehicle inspected by your Toyota dealer.

Customization that can be configured at Toyota dealer

Settings (e.g. buzzer volume) can be changed.
(Customizable features →P. 640)

Certification

For vehicles sold in the U.S.A.

This device complies with Part 15 of the FCC Rules. Operation is subject to the following two conditions; (1) This device may not cause harmful interference, and (2) This device must accept any interference received, including interference that may cause undesired operation.

For vehicles sold in Canada

This ISM device complies with Canadian ICES-001.

Cet appareil ISM est conforme a la norme NMB-001 du Canada.

CAUTION

Caution when using the intuitive parking assist-sensor

Do not attach any accessories within the sensor range.
Doing so may result in the vehicle being unable to be driven safely and possibly cause an accident.

NOTICE

Notes when washing the vehicle

Do not apply intensive bursts of water or steam to the sensor area.
Doing so may result in the sensor malfunctioning.

Rear view monitor system (rear view mirror-attached type)*

The rear view monitor assists the driver by displaying an image of the area behind the vehicle while reversing. The image is displayed in reverse on the screen. This reversed image is a similar image to the one on the inside rear view mirror.

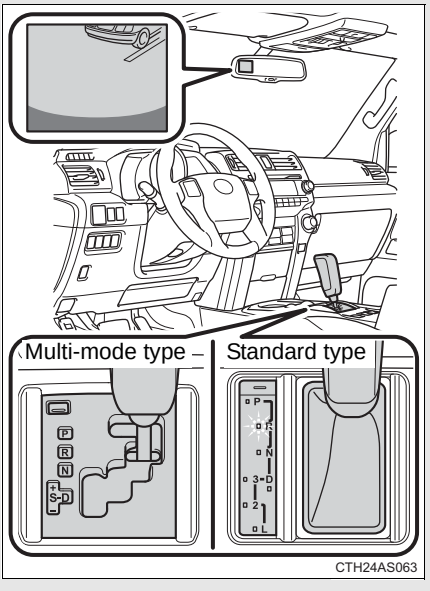

The rear view image is displayed when the shift lever is in R.

- If the shift lever is shifted out of R, the screen is turned off.
- The screen remains on for approximately 5 minutes.

*: If equipped

■ **The rear view monitor system can be operated when**

Vehicles without a smart key system: The engine switch is in the “ON” position and the shift lever is in R.

Vehicles with a smart key system: The “ENGINE START STOP” switch is in IGNITION ON mode and the shift lever is in R.

■ **Switching the screen on/off**

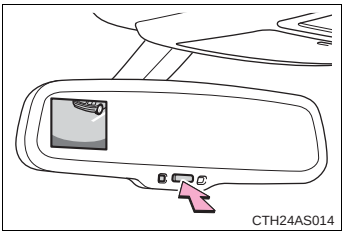

When the screen is displayed, press the “AUTO” button on the inside rear view mirror to switch the screen on/off.

Screen on: Green indicator comes on.

Screen off: Orange indicator comes on.

In the following situation, the display will be re-enabled if it has been turned off:

Vehicles without a smart key system
The engine switch is turned to the “ON” position.

Vehicles with a smart key system
The “ENGINE START STOP” switch is turned to IGNITION ON mode.

Displayed area

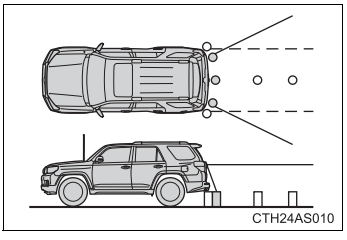

The area covered by the camera is limited. Objects that are close to either corner of the bumper or under the bumper cannot be seen on the screen.

The area displayed on the screen may vary depending on vehicle orientation or road conditions.

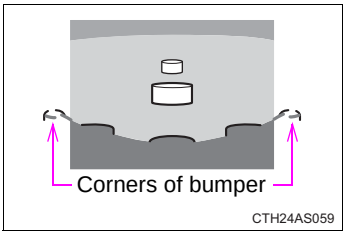

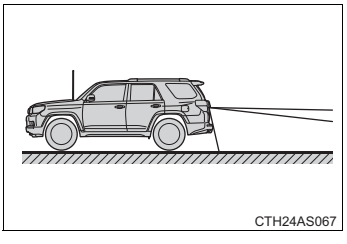

Rear view monitor system camera

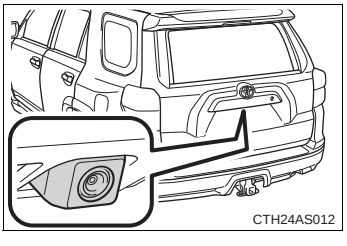

The rear view monitor system camera is located on the back door as shown in the illustration. The camera uses a special lens. The distance of the image that appears on the screen differs from the actual distance.

In the following cases, it may become difficult to see images on the screen even when the system is functioning correctly:

- The vehicle is in a dark area, such as at night.
- The temperature near the lens is extremely high or low.

- Water droplets are on the camera lens or humidity is high, such as when it rains.
- Foreign matter, such as snow or mud, adheres to the camera lens.
- When the camera has scratches or dirt on it.
- The sun or headlights are shining directly into the camera lens.
- A bright object such as a white wall is reflected in the mirror surface over the monitor.

Smear effect

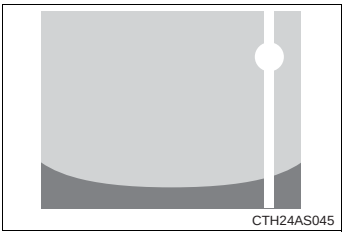

If a bright light, such as sunlight reflected off the vehicle body, is picked up by the camera, a smear effect* characteristic to the camera may occur.

*: Smear effect — A phenomenon that occurs when a bright light is picked up by the camera; when transmitted by the camera, the light source appears to have a vertical streak above and below it.

Flicker effect

When the camera is used under fluorescent light, sodium lights, or mercury lights etc., the lights and the illuminated areas may appear to flicker.

CAUTION

■ **When using the rear view monitor system**

Observe the following precautions to avoid an accident that could result in death or serious injuries:

- Never depend solely on the monitor system when reversing.
- Always check visually and with the mirrors to confirm your intended path is clear.
- Use your own eyes to confirm the vehicle's surroundings, as the displayed image may become faint or dark, and moving images will be distorted, or not entirely visible when the outside temperature is low. When backing up, be sure to check behind and all around the vehicle visually and with the mirrors before proceeding.
- Depicted distances between objects and flat surfaces differ from actual distances.
- Do not use the system if the back door is open.

■ **Conditions which may affect the rear view monitor system**

- If the back of the vehicle has been hit, the camera's position and mounting angle may have changed. Have the vehicle inspected by your Toyota dealer.
- Rapid temperature changes, such as when hot water is poured on the vehicle in cold weather, may cause the system to function abnormally.
- If the camera lens is dirty, it cannot transmit a clear image. Rinse with water and wipe with a soft cloth. If the camera lens is extremely dirty, wash with a mild cleanser and rinse.
- The displayed image may be darker and moving images may be slightly distorted when the system is cold.

NOTICE

- Do not allow organic solvent, car wax, window cleaner or glass coat to adhere to the camera. If this happens, wipe it off as soon as possible.
- When replacing tires, please consult your Toyota dealer. If you replace the tires, the area displayed on the screen may change.

Use the front-wheel drive control lever to select the following transfer modes:

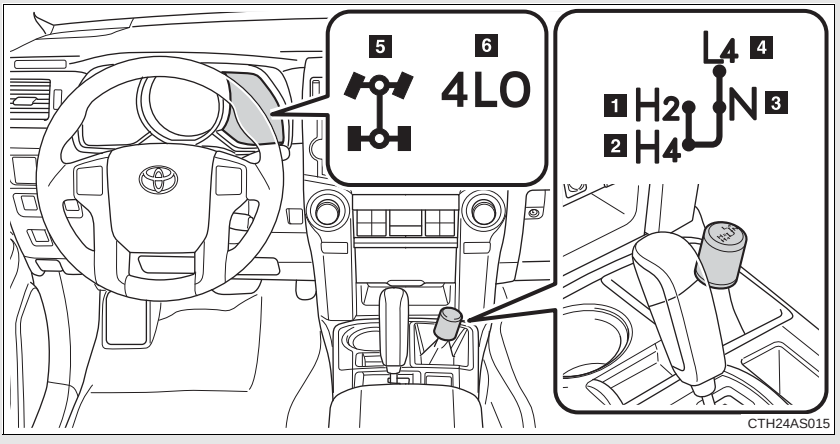

The four-wheel drive indicator comes on when H4, N or L4 mode is selected.

1 H2 (high speed position, two-wheel drive)

Normal driving.

2 H4 (high speed position, four-wheel drive)

Greater traction than two wheel drive.
For when you experience a loss of power, such as wheel slipping.

3 N (neutral position)

No power is delivered to the wheels.

4 L4 (low speed position, four-wheel drive)

For driving requiring maximum power and traction such as climbing or descending steep hills, off-road driving and hard pulling in sand or mud, etc.

5 Four-wheel drive indicator

6 Low speed four-wheel drive indicator

Shifting between H2 and H4

■ Shifting from H2 to H4

STEP 1 Reduce vehicle speed to less than 50 mph (80 km/h).

STEP 2 Shift the front-wheel drive control lever to H4.

The four-wheel drive indicator will turn on.

■ Shifting from H4 to H2

Shift the front-wheel drive control lever to H2.
This can be done at any speed.

The four-wheel drive indicator will go off.

Shifting between H4 and L4

STEP 1 Stop the vehicle completely.

STEP 2 Shift the shift lever to N.

STEP 3 Shift the front-wheel drive control lever to L4 or H4.

The low speed four-wheel drive indicator will turn on (L4) or go off (H4).

■ When the front-wheel drive control lever is shifted to L4

VSC and TRAC (TRC) are automatically turned off.

■ If the four-wheel drive indicator flashes

The transfer mode may not successfully change. Drive straight ahead while accelerating or decelerating, or drive in reverse.

■ If the four-wheel drive or low speed four-wheel drive indicator flashes rapidly

There may be a malfunction in the four-wheel drive system. Have the vehicle inspected by your Toyota dealer immediately.

■ Four-wheel drive usage frequency

You should drive in four-wheel drive for at least 10 miles (16 km) each month.

This will assure that the front drive components are lubricated.

CAUTION

■ Shifting the front-wheel drive control lever from H2 to H4 while driving

Never operate the front-wheel drive control lever if the wheels are slipping. Stop the slipping or spinning before shifting.

Use the four-wheel drive control switch to select the following transfer modes:

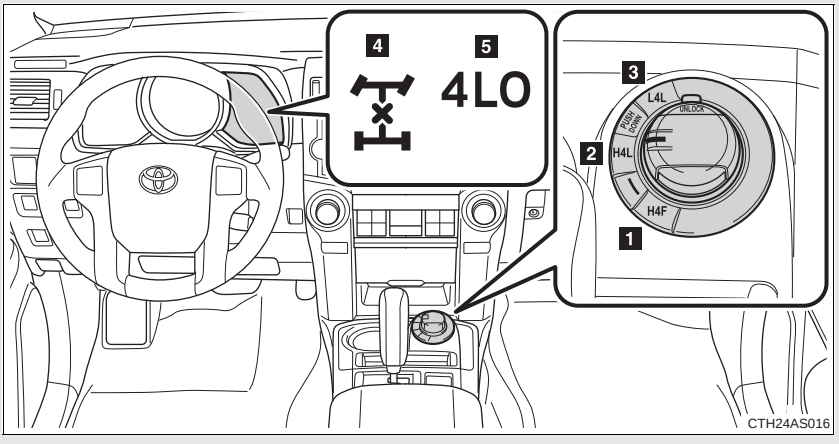

1 H4F (high speed position)

Normal driving on all types of roads.

2 H4L (high speed position, center differential locked)

For when your vehicle's wheel gets stuck in a ditch or when you are driving on a slippery or bumpy surface.

3 L4L (low speed position, center differential locked)

For driving requiring maximum power and traction such as climbing or descending steep hills, off-road driving and hard pulling in sand or mud, etc.

4 Center differential lock indicator

5 Low speed four-wheel drive indicator

Shifting between H4F and H4L

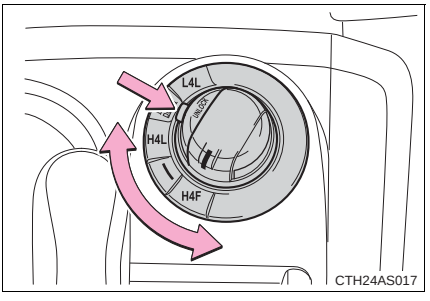

Push the “UNLOCK” button and turn the four-wheel drive control switch to H4L or H4F.
This can be done at any speed.

The center differential lock indicator will turn on (H4L) or go off (H4F).

Shifting between H4L and L4L

■ Shifting from H4L to L4L

STEP 1 Stop the vehicle completely.

STEP 2 Shift the shift lever to N.

STEP 3

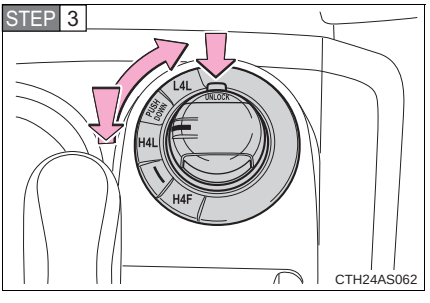

Push the “UNLOCK” button and then push and turn the four-wheel drive control switch to L4L.

Maintain this condition until the low speed four-wheel drive indicator turns on.

■ Shifting from L4L to H4L

STEP 1 Stop the vehicle completely.

STEP 2 Shift the shift lever to N.

STEP 3

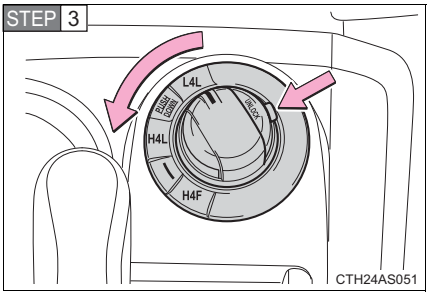

Push the “UNLOCK” button and turn the four-wheel drive control switch to H4L.

Maintain this condition until the low speed four-wheel drive indicator goes off.

■ The four-wheel drive control switch can be operated when

The “ENGINE START STOP” switch is in IGNITION ON mode.

■ When the four-wheel drive control switch is turned to L4L

VSC and TRAC (TRC) are automatically turned off.

■ If the center differential lock indicator flashes

Locking or unlocking of the center differential is not complete. Drive straight ahead while accelerating or decelerating, or drive in reverse.

■ If the center differential lock indicator flashes and a buzzer sounds

Locking of the center differential is not complete. Stop the wheels from slipping or spinning and, if the indicator still flashes, operate the four-wheel drive control switch again.

■ If the low speed four-wheel drive indicator continues to flash

The transfer mode may not successfully change. Operate the four-wheel drive control switch again.

If the low speed four-wheel drive indicator continues to flash and a buzzer sounds

The shift lever is not in N and/or the vehicle is moving. Stop the vehicle completely, shift the shift lever to N and make sure that the indicator stops flashing.

If the low speed four-wheel drive indicator or the center differential lock indicator flashes rapidly

There may be a malfunction in the four-wheel drive system. Have the vehicle inspected by your Toyota dealer immediately.

CAUTION

Operating the four-wheel drive control switch

Never operate the four-wheel drive control switch if the wheels have lost traction. Doing so may cause an accident resulting in death or serious injury. Stop the wheels from slipping or spinning before operating the switch.

NOTICE

To prevent damage to the center differential

- For normal driving on dry and hard surface roads, unlock the center differential.
- Unlock the center differential after the wheels are out of the ditch or off the slippery or bumpy surface.
- Do not lock or unlock the center differential when the vehicle is turning or when its wheels are spinning freely off the ground.

Active traction control system*

The active traction control system automatically helps prevent the spinning of 4 wheels when the vehicle is started or accelerated on slippery road surfaces.

■ System operation

STEP 1 Part-time 4WD models:

Stop the vehicle, shift the shift lever to N and shift the front-wheel drive control lever into L4.

Full-time 4WD models:

Stop the vehicle, shift the shift lever to N and then push and turn the four-wheel drive control switch to L4L.

STEP 2

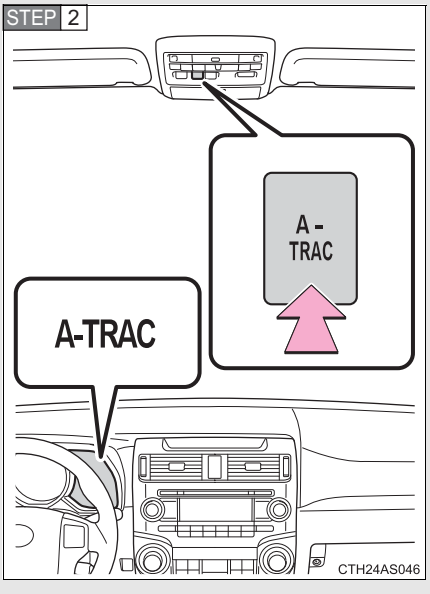

Press the “A-TRAC” switch to activate the system.

At this time, the “A-TRAC” indicator will come on.

To cancel the system, push the switch again.

*: If equipped

When the active traction control system is operating

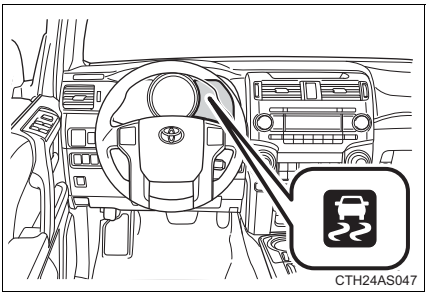

If all wheels spin, the slip indicator flashes to indicate that the active traction control system has been engaged.

■When the rear differential is locked (vehicles with a rear differential lock system)

The active traction control system is activated only when vehicle speed is less than 4 mph (6 km/h).

■Sounds and vibrations caused by the active traction control system

- A sound may be heard from the engine compartment when the engine is started or just after the vehicle begins to move. This sound does not indicate that a malfunction has occurred in the system.
- Vibrations may be felt through the vehicle body and steering. This may occur when the system is operating.

■If the brake system overheats

The system will cease operation and a buzzer will sound to alert the driver. At this time, the “A-TRAC” indicator will go off and the “TRAC OFF (TRC OFF)” indicator will come on. Stop the vehicle in a safe place. (There is no problem with continuing normal driving.)

The system will be automatically restored after a short time.

CAUTION

■The active traction control system may not operate effectively when

Directional control and power may not be achievable while driving on slippery road surfaces, even if the active traction control system is operating.
Do not drive the vehicle in conditions where stability and power may be lost.

AUTO LSD system (2WD models)

The AUTO LSD system aids traction by using the traction control system to control engine performance and braking when one of the rear wheels begins to spin.

The system should be used only when wheel spinning occurs in a ditch or rough surface.

■ System operation

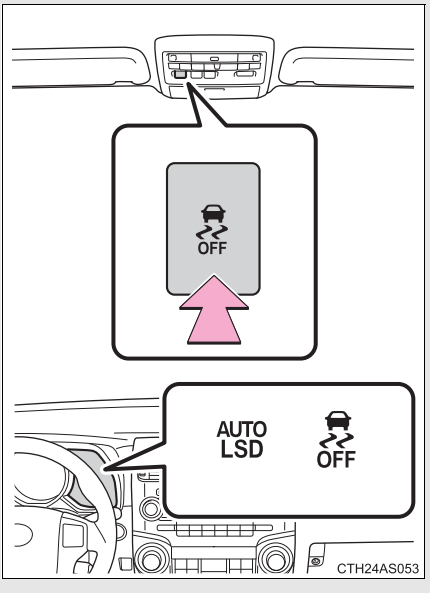

Press the VSC off switch to turn on the system.

At this time, the “AUTO LSD” and VSC off indicators will come on.

To turn off the system, press the switch again.

When the AUTO LSD system is operating

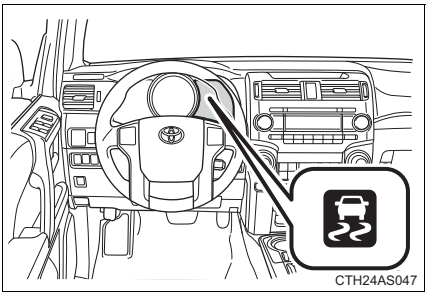

If the rear wheels spin, the slip indicator flashes to indicate that the AUTO LSD system has controlled the spinning of the rear wheels.

If the engine is turned off and restarted

The AUTO LSD system and the indicators are automatically turned off.

If the brake system overheats

The system will cease operation and a buzzer will sound to alert the driver. At this time, the “AUTO LSD” indicator will flash and the “TRAC OFF” indicator will come on. Stop the vehicle in a safe place. (There is no problem with continuing normal driving.)

The system will be automatically restored after a short time.

CAUTION

To avoid an accident

- Do not use the AUTO LSD system in conditions other when wheel spinning occurs in a ditch or rough surfaces.
  A much greater steering effort and more careful cornering control will be required.
- Do not drive with the AUTO LSD system continuously turned on.

NOTICE

Activating while driving

Never activate the AUTO LSD system if the wheel is slipping.
Stop the slipping or spinning before activating.

Rear differential lock system*

The rear differential lock system is provided for use only when wheel spinning occurs in a ditch or on a slippery or rugged surface.

The rear differential lock system is effective in case one of the rear wheels is spinning.

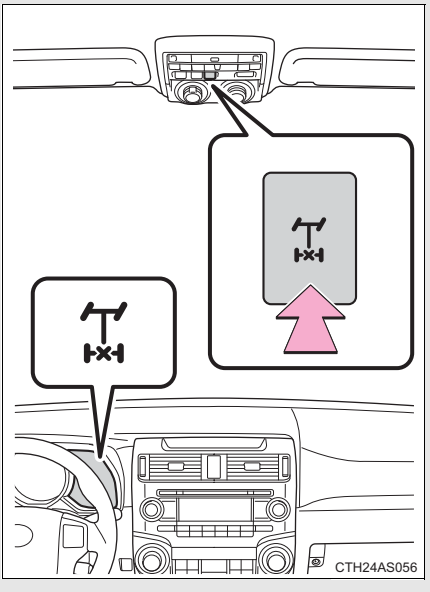

Press the switch to lock the rear differential.

At this time, the rear differential lock indicator will flash. Wait a few seconds for the system to complete operation. After the rear differential is locked, the indicator will stop flashing and remain on.

To unlock the rear differential, press the switch again.

*: If equipped

Using the rear differential lock system

STEP 1 Before using the rear differential lock system:
Stop the vehicle, shift the shift lever to N and shift the front-wheel drive control lever into L4 to see if this is sufficient. If this has no effect, additionally use the rear differential lock system.

STEP 2 Be sure the wheels have stopped spinning.

STEP 3 Press the rear differential lock switch.

STEP 4 Gently depress the accelerator pedal.
After the rear differential is locked, the indicator will come on.

Unlock the rear differential as soon as the vehicle moves.
To unlock the rear differential, press the switch again.

Locking the rear differential

The following systems do not operate when the rear differential is locked. It is normal operation for the ABS warning light and VSC off indicator to be on at this time.

- ABS
- Multi Terrain ABS
- Brake assist system
- VSC
- Hill-start assist control

The rear differential lock is disengaged when

The front-wheel drive control lever is shifted to H2 or H4.

Never forget to turn off the switch after using this feature.

After unlocking the rear differential

Check that the indicator goes off.

CAUTION

■ **To avoid an accident**

- Do not use the rear differential lock system except when wheel spinning occurs in a ditch or on a slippery or rugged surface. Large steering effort and careful cornering control will be required.
- Do not lock the rear differential until the wheels have stopped spinning. Otherwise, the vehicle may move in an unexpected direction when the differential lock is engaged, resulting in an accident. This may also lead to possible damage to rear differential lock component parts.
- Do not drive over 5 mph (8 km/h) when the rear differential is locked.
- Do not keep driving with the rear differential lock switch on.

Downhill assist control system*

With the downhill assist control system, the vehicle is able to descend a steep hill while maintaining a constant low speed of about 3 mph (5 km/h) without brake pedal operation.

■ Activating the system

The system will activate when

- The vehicle is traveling under 15 mph (25 km/h) with the accelerator and brake pedals released.
- Part-time 4WD models: The front-wheel drive control lever is in L4.
  Full-time 4WD models: The four-wheel drive control switch is in L4L.
- The rear differential is unlocked (if equipped).

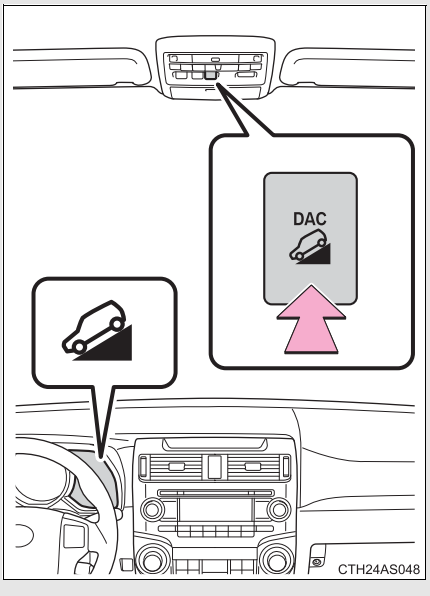

Press the “DAC” switch.

The downhill assist control system indicator will come on to indicate that the downhill assist control system is activated.

Pressing the switch again turns the system off.

*: If equipped

While the downhill assist control system is operating

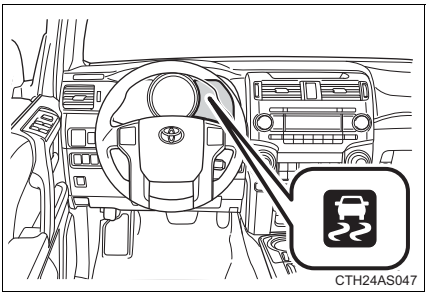

The slip indicator will flash to indicate that the downhill assist control system is operating, and the stop lights and high mounted stoplight will turn on.

Operating tips

The system will operate when the shift lever is in any position other than P. However, to make effective use of the system it is recommended that the shift lever be shifted to the “2” or “1” range of S.

If the downhill assist control system indicator flashes

- In the following situations, the indicator flashes and the system will not operate:
  - The transfer mode is not in L4 (part-time 4WD models) or L4L (full-time 4WD models).
  - The rear differential is locked.
  - The brake system overheats.
    The system will situations operation and a buzzer will sound to alert the driver. At this time, the “TRAC OFF (TRC OFF)” indicator will come on. Stop the vehicle in a safe place. Refrain from using the system until the indicator stops flashing and stays on. (There is no problem with continuing normal driving.)
- In the following situations, the indicator flashes to alert the driver, but the system will still operate:
  - The shift lever is in N. (Engine braking will not occur.)
  - The “DAC” switch is turned off while the system is operating.
    The system will gradually ceases operation. The indicator will flash during operation, and then go off when the system is fully off.

System malfunction

In case of a system malfunction, the following may occur:

- The downhill assist control system indicator flashes in a situation other than those listed above.
- The downhill assist control system indicator does not come on when the engine switch is turned to the “ON” position (vehicles without a smart key system) or the “ENGINE START STOP” switch is turned to IGNITION ON mode (vehicles with a smart key system).

Have your vehicle inspected by your Toyota dealer.

CAUTION

Conditions which may affect the downhill assist control system operation

- Do not rely too heavily on the downhill assist control system. On extremely steep inclines, icy surfaces or muddy roads, the vehicle may slip and the system may not be able to maintain the constant low vehicle speed of about 3 mph (5 km/h), leading to an accident causing death or serious injury.
- Do not shift the shift lever to R while driving forward, or to D while driving backward. Doing so may cause the wheels to lock up, leading to an accident causing death or serious injury. In addition, excessive stress will be applied to the automatic transmission, possibly resulting in damage.

Crawl Control*

Allows travel on extremely rough off-road surfaces at a fixed low speed without pressing the accelerator or brake pedal. Minimizes loss of traction or vehicle slip when driving on slippery road surfaces, allowing for stable driving.

■ Crawl Control switch

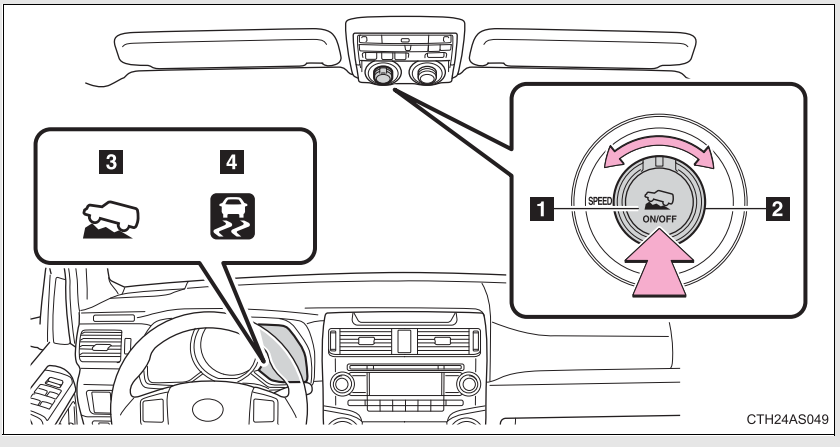

1 "ON/OFF" switch

The Crawl Control indicator comes on and the slip indicator flashes when operating.

2 Speed selector dial

Turn the dial clockwise to increase the speed and counterclockwise to decrease the speed.

3 Crawl Control indicator

4 Slip indicator

*: If equipped

Speed modes

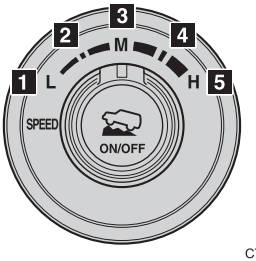

CTH24AS024

The following table shows some typical terrains and the recommended speed modes.

Mode		Road condition
1	L (Low)	Rock, mogul (downhill) and gravel (downhill)
2	Between L and M	Mogul (uphill)
3	M (Medium)	Snow, mud, gravel (uphill), sand, dirt, mogul (uphill) and grass
4	Between M and H	
5	H (High)	

Crawl Control can be operated when

- The engine is running.
- The shift lever is in any position other than P or N.
- The front-wheel drive control lever is in L4.
- The driver’s door is closed.

Crawl Control is temporarily canceled when

Vehicle speed exceeds 15 mph (25 km/h). The Crawl Control indicator flashes until the vehicle speed is reduced.

Automatic system cancelation

In the following situations, the system will cease operation and a buzzer will sound to alert the driver. The Crawl Control indicator will flash until the system is turned off completely.

- When the shift lever is shifted to P or N
- When the front-wheel drive control lever is shifted to H4
- When the driver's door is opened
- When the system is malfunctioning
- When the brake system overheats
  Stop the vehicle in a safe place. (There is no problem with continuing normal driving.)
- When the automatic transmission system overheats
  Stop the vehicle in a safe place until the automatic transmission fluid temperature warning light goes off.

Sounds and vibrations caused by the Crawl Control system

- A sound may be heard from the engine compartment when the engine is started or just after the vehicle begins to move. This sound does not indicate that a malfunction has occurred in Crawl Control system.
- Either of the following conditions may occur when the Crawl Control system is operating. None of these indicates that a malfunction has occurred.
  - Vibrations may be felt through the vehicle body and steering.
  - A motor sound may be heard after the vehicle comes to a stop.

CAUTION

■ **When using Crawl Control**

- Do not overly rely on Crawl Control. This function does not extend the vehicle's performance limitations. Always check the terrain thoroughly and drive safely.
- The recommended speed modes for the listed terrains (→P. 242) are only a reference. The selected mode may not be suitable to actual off-road conditions due to factors such as the type or unevenness of the terrain or the degree of incline. Check the actual terrain thoroughly and drive safely.
- After activating Crawl Control, make sure that the Crawl Control indicator comes on. If the indicator flashes, the vehicle is not under system control.

■ **Conditions under which the system may not operate correctly**

When driving on the following surfaces, the system may not be able to maintain a fixed low speed, which may result in an accident:

- Extremely steep inclines
- Extremely uneven surfaces
- Snow-covered roads, or other slippery surfaces

Multi-terrain Select*

The Multi-terrain Select system has 4 terrain modes. When a terrain mode is selected in accordance with terrain conditions, engine power and active traction control system is controlled to enhance off-road drivability.

Additionally, guidance messages such as transfer mode selection advice are displayed on the accessory meter to assist the driver in operating the vehicle.

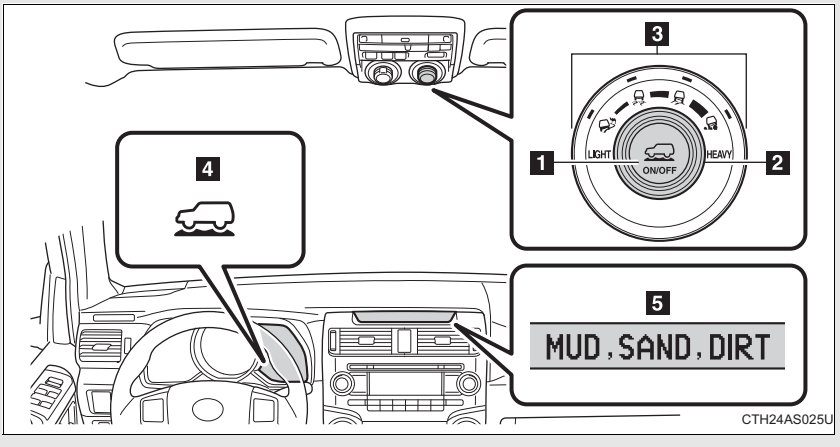

1 “ON/OFF” switch
2 Mode selector dial
3 Mode indicators
4 Multi-terrain Select indicator
5 Accessory meter

*: If equipped

Multi-terrain Select modes

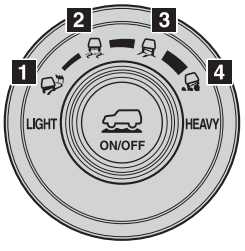

CTH24AS026

	Symbol	Mode
1		MUD & SAND
2		LOOSE ROCK
3		MOGUL
4		ROCK

The following table shows some typical terrains and the recommended Multi-terrain Select modes.

Mode / Road condition	ROCK	MOGUL	LOOSE ROCK	MUD & SAND
Rock	★			
Mogul		★		
Bump, groove		★		
Slope/ V-ditch		★		
Uphill/ downhill		★		
Riverbed			★	
Gravel			★	
Bush			★	
Deep snow				★
Sand				★
Mud				★
Dirt				★

■ **Multi-terrain Select can be activated when**

- Vehicle speed is approximately 7 mph (12 km/h) or less.
- MUD & SAND: The front-wheel drive control lever is in L4 or H4.
  LOOSE ROCK, MOGUL and ROCK: The front-wheel drive control lever is in L4.
- Crawl Control is not operating.

Selecting modes

STEP 1

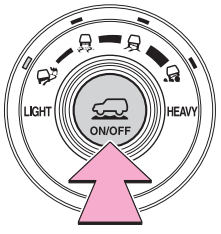

CTH24AS031U

Press the “ON/OFF” switch.

All the mode indicators will come on and then go off except the indicator for the present mode. The applicable road conditions will be displayed on the accessory meter.

STEP 2

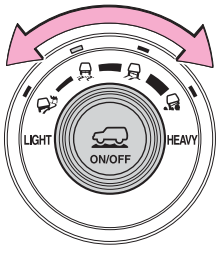

CTH24AS032U

Turn the dial to select the desired mode.

The indicator of the selected mode will come on and the applicable road conditions will be displayed on the accessory meter.

If the mode indicator flashes, Multi-terrain Select cannot be operated. Follow the instructions displayed on the accessory meter and check that the mode indicator stops flashing. (→P. 249)

Messages displayed on the accessory meter

Depending on switch operation, one of the following messages may appear on the accessory meter to provide guidance on transfer mode selection etc:

Message	Details	Procedure
SHIFT TO 4WD (When selecting MUD & SAND mode)	Indicates that the transfer mode needs to be changed to H4 or L4.	Shift the front-wheel drive control lever to H4 or L4.
SHIFT TO L4 (When selecting LOOSE ROCK, MOGUL or ROCK mode)	Indicates that the transfer mode needs to be changed to L4.	Shift the front-wheel drive control lever to L4.
STOP THE VEHICLE & SHIFT THE AUTO. TRANSMISSION TO N (When selecting any mode)	Indicates that the transfer mode cannot be changed to H4 or L4.	Stop the vehicle completely and/or shift the shift lever to N.
ACCELERATE OR DECELERATE (When shifting the front-wheel control lever to H4 or H2)	Indicates that the transfer mode may not successfully change.	Drive straight ahead while accelerating or decelerating, or drive in reverse.
DRIVE THE VEHICLE A SHORT DISTANCE (When pressing the rear differential lock switch)	Indicates that the rear differential is not locked.	Drive the vehicle forward or backward a short distance.
OP. NOT POSSIBLE WHEN Multi-terrain Select ACTIVATED (When pressing the VSC off switch or “A-TRAC” switch)	Indicates that VSC and active traction control cannot be disabled while Multi-terrain Select is operating.	-

Message	Details	Procedure
CANNOT BE SELECTED (When pressing the “ON/OFF” switch)	Indicates that Multi-terrain Select cannot be operated because vehicle speed exceeds approximately 7 mph (12 km/h).	Reduce vehicle speed.
OP. NOT POSSIBLE WHEN CRAWL CONTROL ACTIVATED (When pressing the “ON/OFF” switch)	Indicates that Multi-terrain Select cannot be operated because Crawl Control is operating.	Turn Crawl Control off.
Multi-terrain Select HAS BEEN CANCELED (When pressing the “ON/OFF” switch)	Indicates that Multi-terrain Select is turned off.	-
Multi-terrain Select NOT AVAILABLE (When pressing the “ON/OFF” switch)	Indicates that Multi-terrain Select cannot be operated because the VSC and/or 4WD system may be malfunctioning.	Contact your Toyota dealer.

Multi-terrain Select is temporarily canceled when

The front-wheel drive control lever is shifted to H4 when Multi-terrain Select is in ROCK, MOGUL or LOOSE ROCK mode. The mode indicator will flash until the lever is shifted back to L4.

If the Multi-terrain Select indicator continues to flash

This may indicate a malfunction in the Multi-terrain Select system.
In this case, Multi-terrain Select is automatically canceled. Have your vehicle inspected by your Toyota dealer.

If the Multi-terrain Select indicator goes off while Multi-terrain Select is operating

- One of the vehicle systems related to Multi-terrain Select may be malfunctioning.
  Have your vehicle inspected by your Toyota dealer.
- The brake actuator may be at risk of overheating.
  A buzzer will sound, the “A-TRAC” indicator will go off and the “TRAC OFF (TRC OFF)” indicator will come on. Stop the vehicle in a safe place. Refrain from using Multi-terrain Select until the “A-TRAC” indicator comes back on and the “TRAC OFF (TRC OFF)” indicator goes off. (The vehicle can still be driven, even if Multi-terrain Select is inoperative.)

In the above cases, Multi-terrain Select is automatically canceled.

CAUTION

Before driving

To avoid an accident, observe the precautions relating to off-road driving. (→P. 262)

When using Multi-terrain Select

- Do not use the Multi-terrain Select system for normal (on-road) driving. The Multi-terrain Select system is designed for off-road use only.
- Do not overly rely on Multi-terrain Select. This function does not extend the vehicle's performance limitations. Always check the terrain thoroughly and drive safely.
- The recommended modes for the listed terrains (→P. 246) are only a reference. The selected mode may not be suitable to actual off-road conditions due to factors such as the type or unevenness of the terrain or the degree of incline. Check the actual terrain thoroughly and drive safely.
- After selecting a mode, make sure that the Multi-terrain Select indicator and the selected mode indicator come on. If any related indicator flashes, the vehicle is not under Multi-terrain Select control.

Driving assist systems

To help enhance driving safety and performance, the following systems operate automatically in response to various driving situations. Be aware, however, that these systems are supplementary and should not be relied upon too heavily when operating the vehicle.

■ ABS (Anti-lock Brake System)

Helps to prevent wheel lock when the brakes are applied suddenly, or if the brakes are applied while driving on a slippery road surface

■ Multi Terrain ABS (Anti-lock Brake System) (if equipped)

Helps to prevent wheel lock when the brakes are applied suddenly, or if the brakes are applied while driving on a slippery road surface, or in off-road conditions (such as rough roads, sand and mud)

The Multi Terrain ABS operates in synchronization with the Multi-terrain Select.

■ Brake assist

Generates an increased level of braking force after the brake pedal is depressed when the system detects a panic stop situation

■ VSC (Vehicle Stability Control)

Helps the driver to control skidding when swerving suddenly or turning on slippery road surfaces

■ TRAC/TRC (Traction Control)

Helps to maintain drive power and prevent the drive wheels from spinning when starting the vehicle or accelerating on slippery roads

■ Hill-start assist control (if equipped)

Helps to prevent the vehicle from rolling backward when starting on an incline or slippery slope

■ LSD (Limited Slip Differential) (if equipped)

Transfers drive power to the rear tires when front tires spin, and vice versa, in order to improve traction

■ KDSS (Kinetic Dynamic Suspension System) (if equipped)

Enhances ride comfort and handling response by using a hydraulic control system to control the suspension stabilizer bars in response to road surface and driving conditions during cornering or off-road driving

When the VSC/TRAC systems are operating (2WD models)

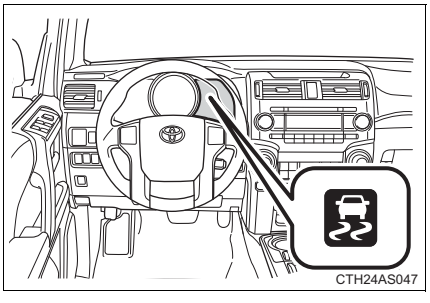

If the vehicle is in danger of slipping or if any of the drive wheels spins, the slip indicator flashes to indicate that the VSC/TRAC systems are operating.

When the VSC/TRAC (TRC)/hill-start assist control systems are operating (4WD models)

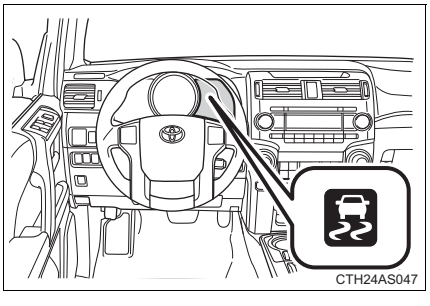

If the vehicle is in danger of slipping or rolling backward when starting on an incline, or if any of the drive wheels spins, the slip indicator flashes to indicate that the VSC/TRAC (TRC)/hill-start assist control systems are operating.

The stop lights and high mounted stoplight turn on and a buzzer (intermittent) sounds when the hill-start assist control system is operating.

Disabling the TRAC/VSC systems (2WD models)

If the vehicle gets stuck in fresh snow or mud, the TRAC/VSC systems may reduce power from the engine to the wheels. You may need to turn the system off to enable you to rock the vehicle in order to free it.

■ Turning off the TRAC system only (turning on the AUTO LSD system [→P. 232])

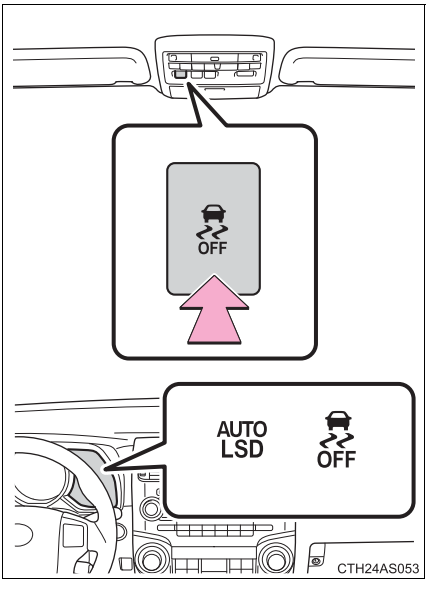

To turn the TRAC system off, quickly press and release the button.

The VSC off and “AUTO LSD” indicators will come on.

Press the button again to turn the system back on.

Turning off both TRAC and VSC systems

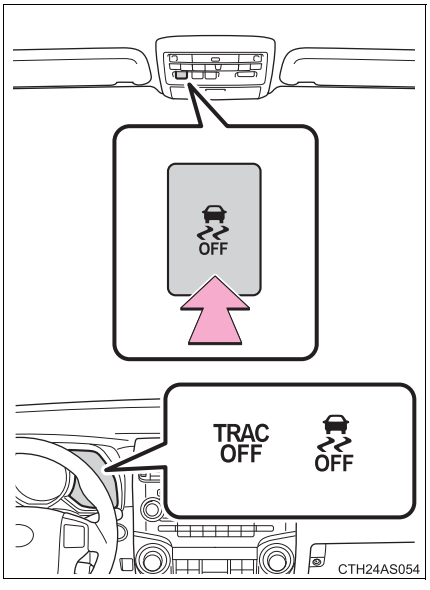

To turn the TRAC and VSC systems off, press and hold the button for more than 3 seconds while the vehicle is stopped.

The “TRAC OFF” and VSC off indicators will come on.

Press the button again to turn the systems back on.

Disabling the TRAC (TRC)/VSC systems (4WD models)

If the vehicle gets stuck in fresh snow or mud, the TRAC (TRC)/VSC systems may reduce power from the engine to the wheels. You may need to turn the system off to enable you to rock the vehicle in order to free it.

■ Turning off the TRAC (TRC) system only

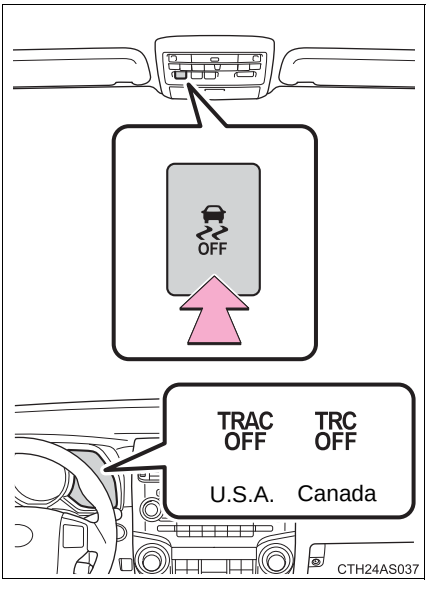

To turn the TRAC (TRC) system off, quickly press and release the button.

The “TRAC OFF (TRC OFF)” indicator will come on.

Press the button again to turn the system back on.

Turning off both TRAC (TRC) and VSC systems

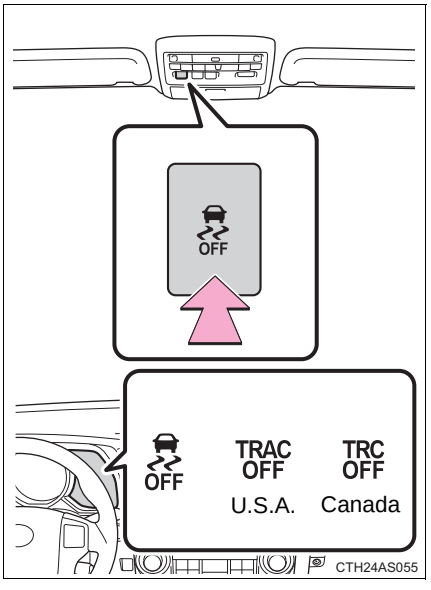

To turn the TRAC (TRC) and VSC systems off, press and hold the button for more than 3 seconds while the vehicle is stopped.

The “TRAC OFF (TRC OFF)” and VSC off indicators will come on.

Press the button again to turn the systems back on.

■ **Hill-start assist control operation conditions**

- The shift lever is in D or S.
- The brake pedal is not depressed.
- The rear differential is unlocked (if equipped).

■ **If the brake system overheats**

The hill-start assist control will cease operation and a buzzer will sound to alert the driver. At this time, the “TRAC OFF (TRC OFF)” indicator will come on. Stop the vehicle in a safe place. (There is no problem with continuing with normal driving.)

The system will be automatically restored after a short time.

■ **Sounds and vibrations caused by the ABS, Multi Terrain ABS (if equipped), brake assist, VSC, TRAC (TRC) and hill-start assist control (if equipped) systems**

- A sound may be heard from the engine compartment when the engine is started or just after the vehicle begins to move. This sound does not indicate that a malfunction has occurred in any of these systems.
- Any of the following conditions may occur when the above systems are operating. None of these indicates that a malfunction has occurred.
  - Vibrations may be felt through the vehicle body and steering.
  - A motor sound may be heard after the vehicle comes to a stop.
  - The brake pedal may pulsate slightly after the ABS or Multi Terrain ABS is activated.
  - The brake pedal may move down slightly after the ABS or Multi Terrain ABS is activated.

■ **Reactivation of the TRAC (TRC)/VSC systems after turning off the engine**

Turning off the engine after turning off the TRAC (TRC)/VSC systems will automatically reactivate them.

■ **Reactivation of the VSC system linked to vehicle speed (2WD models)**

When the TRAC system is turned off and the AUTO LSD system is turned on, the VSC system will turn on when vehicle speed increases. However, when the TRAC and VSC systems are turned off, the systems will not turn on even when vehicle speed increases.

Reactivation of the TRAC (TRC)/VSC systems (4WD models)

If the TRAC (TRC)/VSC systems are turned off, the systems will not turn on even when vehicle speed increases.

CAUTION

The ABS and Multi Terrain ABS do not operate effectively when

- Tires with inadequate gripping ability are used (such as excessively worn tires on a snow covered road).
- The vehicle hydroplanes while driving at high speed on wet or slick roads.

Stopping distance when the ABS or Multi Terrain ABS is operating will exceed that of normal conditions

The ABS and Multi Terrain ABS are not designed to shorten the vehicle's stopping distance. Always maintain a safe distance from the vehicle in front of you in the following situations:

- When driving on dirt, gravel or snow-covered roads
- When driving with tire chains
- When driving over bumps in the road
- When driving over roads with potholes or roads with uneven surfaces

TRAC (TRC) may not operate effectively when

Directional control and power may not be achievable while driving on slippery road surfaces, even if the TRAC (TRC) system is operating.
Do not drive the vehicle in conditions where stability and power may be lost.

Hill-start assist control does not operate effectively when

Do not overly rely on the hill-start assist control. The hill-start assist control may not operate effectively on steep inclines and roads covered with ice.

CAUTION

■ **When the VSC is activated**

The slip indicator light flashes. Always drive carefully.
Reckless driving may cause an accident. Exercise particular care when the indicator light flashes.

■ **When TRAC (TRC)/VSC systems are turned off**

Be especially careful and drive at a speed appropriate to the road conditions. As these are systems to ensure vehicle stability and driving force, do not turn the TRAC (TRC)/VSC systems off unless necessary.

■ **Replacing tires**

Make sure that all tires are of the specified size, brand, tread pattern and total load capacity. In addition, make sure that the tires are inflated to the recommended tire inflation pressure level.

The ABS, Multi Terrain ABS and VSC will not function correctly if different tires are fitted on the vehicle.

Contact your Toyota dealer for further information when replacing tires or wheels.

■ **Handling of tires and the suspension**

Using tires with any kind of problem or modifying the suspension will affect the driving assist systems, and may cause a system to malfunction.

Off-road precautions

This vehicle belongs to the utility vehicle class, which has higher ground clearance and narrower tread in relation to the height of its center of gravity to make it capable of performing in a wide variety of off-road applications.

Off-road vehicle feature

- Specific design characteristics give it a higher center of gravity than ordinary passenger cars. This vehicle design feature causes this type of vehicle to be more likely to rollover. And, utility vehicles have a significantly higher rollover rate than other types of vehicles.
- An advantage of the higher ground clearance is a better view of the road allowing you to anticipate problems.
- It is not designed for cornering at the same speeds as ordinary passenger cars any more than low-slung sports cars designed to perform satisfactorily under off-road conditions. Therefore, sharp turns at excessive speeds may cause rollover.

CAUTION

■ **Off-road vehicle precautions**

Always observe the following precautions to minimize the risk of death, serious injury or damage to your vehicle:

- In a rollover crash, an unbelted person is significantly more likely to die than a person wearing a seat belt. Therefore, the driver and all passengers should fasten their seat belts whenever the vehicle is moving.
- Avoid sharp turns or abrupt maneuvers, if at all possible.
  Failure to operate this vehicle correctly may result in loss of control or vehicle rollover causing death or serious injury.
- Loading cargo on the roof luggage carrier will make the center of the vehicle gravity higher. Avoid high speeds, sudden starts, sharp turns, sudden braking or abrupt maneuvers, otherwise it may result in loss of control or vehicle rollover due to failure to operate this vehicle correctly.
- Always slow down in gusty crosswinds. Because of its profile and higher center of gravity, your vehicle is more sensitive to side winds than an ordinary passenger car. Slowing down will allow you to have better control.
- When driving off-road or in rugged terrain, do not drive at excessive speeds, jump, make sharp turns, strike objects, etc. This may cause loss of control or vehicle rollover causing death or serious injury. You are also risking expensive damage to your vehicle's suspension and chassis.
- Do not drive horizontally across steep slopes. Driving straight up or straight down is preferred. Your vehicle (or any similar off-road vehicle) can tip over sideways much more easily than forward or backward.

Off-road driving

When driving your vehicle off-road, please observe the following precautions to ensure your driving enjoyment and to help prevent the closure of areas to off-road vehicles:

- Drive your vehicle only in areas where off-road vehicles are permitted to travel.
- Respect private property. Get owner's permission before entering private property.
- Do not enter areas that are closed. Honor gates, barriers and signs that restrict travel.
- Stay on established roads. When conditions are wet, driving techniques should be changed or travel delayed to prevent damage to roads.

Additional information for off-road driving

For owners in U.S. mainland, Hawaii and Puerto Rico:

To obtain additional information pertaining to driving your vehicle off-road, consult the following organizations.

- State and Local Parks and Recreation Departments
- State Motor Vehicle Bureau
- Recreational Vehicle Clubs
- U.S. Forest Service and Bureau of Land Management

CAUTION

■ **Off-road driving precautions**

Always observe the following precautions to minimize the risk of death, serious injury or damage to your vehicle:

- Drive carefully when off the road. Do not take unnecessary risks by driving in dangerous places.
- Do not grip the steering wheel spokes when driving off-road. A bad bump could jerk the wheel and injure your hands. Keep both hands and especially your thumbs on the outside of the rim.
- Always check your brakes for effectiveness immediately after driving in sand, mud, water or snow.
- After driving through tall grass, mud, rock, sand, rivers, etc., check that there is no grass, bush, paper, rags, stone, sand, etc. adhering or trapped on the underbody. Clear off any such matter from the underbody. If the vehicle is used with these materials trapped or adhering to the underbody, a breakdown or fire could occur.
- In a rollover crash, an unbelted person is significantly more likely to die than a person wearing a seat belt. Therefore, the driver and all passengers should fasten their seat belts whenever the vehicle is moving.
- When driving off-road or in rugged terrain, do not drive at excessive speeds, jump, make sharp turns, strike objects, etc. This may cause loss of control or vehicle rollover causing death or serious injury. You are also risking expensive damage to your vehicle's suspension and chassis.

NOTICE

To prevent water damage

Take all necessary safety measures to ensure that water damage to the engine or other components does not occur.

- Water entering the engine air intake will cause severe engine damage.
- Water entering the automatic transmission will cause deterioration in shift quality, locking up of your transmission accompanied by vibration, and ultimately damage.
- Water can wash the grease from wheel bearings, causing rusting and premature failure, and may also enter the differentials, transmission and transfer case, reducing the gear oil's lubricating qualities.

When you drive through water

If driving through water, such as when crossing shallow streams, first check the depth of the water and the bottom of the riverbed for firmness. Drive slowly and avoid deep water.

Inspection after off-road driving

- Sand and mud that has accumulated in brake drums and around brake discs may affect braking efficiency and may damage brake system components.
- Always perform a maintenance inspection after each day of off-road driving that has taken you through rough terrain, sand, mud, or water. For scheduled maintenance information, refer to the "Scheduled Maintenance Guide" or "Owner's Manual Supplement".

Take notice of the following information about storage precautions, cargo capacity and load:

- Stow cargo and luggage in the luggage compartment whenever possible.
- Be sure all items are secured in place.
- To maintain vehicle balance while driving, position luggage evenly within the luggage compartment.
- For better fuel economy, do not carry unnecessary weight.

Capacity and distribution

Cargo capacity depends on the total weight of the occupants.

(Cargo capacity) = (Total load capacity) — (Total weight of occupants)

Steps for Determining Correct Load Limit—

(1)Locate the statement “The combined weight of occupants and cargo should never exceed XXX kg or XXX lbs.” on your vehicle's placard.

(2)Determine the combined weight of the driver and passengers that will be riding in your vehicle.

(3)Subtract the combined weight of the driver and passengers from XXX kg or XXX lbs.

(4)The resulting figure equals the available amount of cargo and luggage load capacity.

For example, if the “XXX” amount equals 1400 lbs. and there will be five 150 lb passengers in your vehicle, the amount of available cargo and luggage load capacity is 650 lbs. (1400 - 750 (5 × 150) = 650 lbs.)

(5)Determine the combined weight of luggage and cargo being loaded on the vehicle. That weight may not safely exceed the available cargo and luggage load capacity calculated in Step 4.

(6)If your vehicle will be towing a trailer, load from your trailer will be transferred to your vehicle. Consult this manual to determine how this reduces the available cargo and luggage load capacity of your vehicle.

(→P. 612)

Example on your vehicle

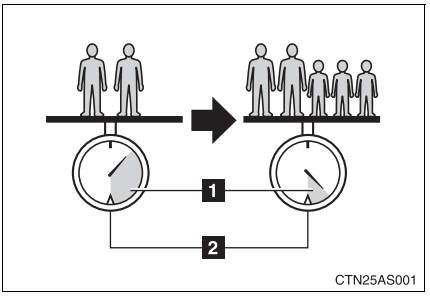

1 Cargo capacity

2 Total load capacity

When 2 people with the combined weight of 366 lb. (166 kg) are riding in your vehicle, the available amount of cargo and luggage load capacity will be as follows:

Without third seats

Total load capacity: 825 lb. (370 kg)

825 lb. - 366 lb. = 459 lb. (370 kg - 166 kg = 204 kg)

With third seats

Total load capacity: 1155 lb. (520 kg)

1155 lb. - 366 lb. = 789 lb. (520 kg - 166 kg = 354 kg)

In this condition, if 3 more passengers with the combined weight of 388 lb. (176 kg) get on, the available cargo and luggage load will be reduced as follows:

Without third seats

459 lb. - 388 lb. = 71 lb. (204 kg - 176 kg = 28 kg)

With third seats

789 lb. - 388 lb. = 401 lb. (354 kg - 176 kg = 178 kg)

As shown in the example above, if the number of occupants increases, the cargo and luggage load will be reduced by an amount that equals the increased weight due to the additional occupants. In other words, if an increase in the number of occupants causes an excess of the total load capacity (combined weight of occupants plus cargo and luggage load), you must reduce the cargo and luggage on your vehicle.

CAUTION

■ Things that must not be carried in the luggage compartment

The following things may cause a fire if loaded in the luggage compartment:

- Receptacles containing gasoline
- Aerosol cans

■ Storage precautions

Observe the following precautions.
Failure to do so may result in death or serious injury.

- Stow cargo and luggage in the luggage compartment whenever possible.
- Do not stack cargo and luggage in the luggage compartment higher than the seatbacks.
  Such items may be thrown about and possibly injure people in the vehicle in the event of sudden braking or in an accident.
- Do not place cargo or luggage in or on the following locations as the item may get under the brake or accelerator pedal and prevent the pedals from being depressed properly, block the driver's vision, or hit the driver or passengers, causing an accident:
  - At the feet of the driver
  - On the front passenger or rear seats (when stacking items)
  - On the instrument panel
  - On the dashboard
- Secure all items in the occupant compartment, as they may shift and injure someone in the event of sudden braking, sudden swerving or an accident.
- When you fold down the rear seats, long items should not be placed directly behind the front seats.
- Never allow anyone to ride in the luggage compartment. It is not designed for passengers. They should ride in their seats with their seat belts properly fastened. Otherwise, they are much more likely to suffer death or serious bodily injury, in the event of sudden braking, sudden swerving or an accident.

CAUTION

■**Capacity and distribution**

- Do not exceed the maximum axle weight rating or the total vehicle weight rating.
- Even if the total load of occupant's weight and the cargo load is less than the total load capacity, do not apply the load unevenly. Improper loading may cause deterioration of steering or braking control which may cause death or serious injury.

■**Roof luggage carrier precautions**

To use the roof rails as a roof luggage carrier, you must fit the roof rails with two or more genuine Toyota cross rails or their equivalent.

When you load cargo on the roof luggage carrier, observe the following:

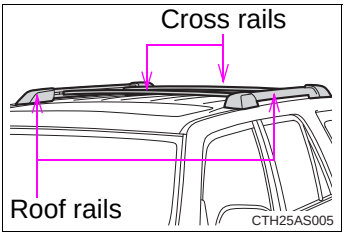

- Place the cargo so that its weight is distributed evenly between the front and rear axles.
- If loading long or wide cargo, never exceed the vehicle overall length or width.(→P. 612)
- Before driving, make sure the cargo is securely fastened on the roof luggage carrier.
- Loading cargo on the roof luggage carrier will make the center of gravity of the vehicle higher. Avoid high speeds, sudden starts, sharp turns, sudden braking or abrupt maneuvers, otherwise it may result in loss of control or vehicle rollover due to failure to operate this vehicle correctly and result in death or serious injury.
- If driving for a long distance, on rough roads, or at high speeds, stop the vehicle now and then during the trip to make sure the cross rails are fixed securely and that the cargo remains in its place.
- Do not exceed 120 lb. (54 kg) cargo weight on the roof luggage carrier.

NOTICE

When loading cargo

Be careful not to scratch the surface of the moon roof.

Vehicle load limits

Vehicle load limits include total load capacity, seating capacity, towing capacity and cargo capacity.

■ Total load capacity

Vehicles without third seats: 825 lb. (370 kg)
Vehicles with third seats: 1155 lb. (520 kg)

Total load capacity means the combined weight of occupants, cargo and luggage.

■ Seating capacity

Vehicle without third seats: 5 occupants (Front 2, Rear 3)
Vehicle with third seats: 7 occupants (Front 2, Rear 5)

Seating capacity means the maximum number of occupants whose estimated average weight is 150 lb. (68 kg) per person.

Even if the number of occupants are within the seating capacity, do not exceed the total load capacity.

■ Towing capacity

2.7 L 4-cylinder (2TR-FE) engine: 2000 lb. (907 kg)
4.0 L V6 (1GR-FE) engine: 5000 lb. (2270 kg)

Towing capacity means the maximum gross trailer weight (trailer weight plus its cargo weight) that you vehicle is able to tow.

■ Cargo capacity

Cargo capacity may increase or decrease depending on the weight and the number of occupants.

■ Total load capacity and seating capacity

These details are also described on the tire and loading information label. (→P. 520)

CAUTION

Overloading the vehicle

Do not overload the vehicle.
It may not only cause damage to the tires, but also degrade steering and braking ability, resulting in an accident.

Winter driving tips

Carry out the necessary preparations and inspections before driving the vehicle in winter. Always drive the vehicle in a manner appropriate to the prevailing weather conditions.

Pre-winter preparations

- Use fluids that are appropriate to the prevailing outside temperatures.
  - Engine oil
  - Engine coolant
  - Washer fluid
- Have a service technician inspect the level and specific gravity of battery electrolyte.
- Have the vehicle fitted with four snow tires or purchase a set of tire chains for the rear tires.

  Ensure that all tires are the same size and brand, and that chains match the size of the tires.

Before driving the vehicle

Perform the following according to the driving conditions.

- Do not try to forcibly open a window or move a wiper that is frozen. Pour warm water over the frozen area to melt the ice. Wipe away the water immediately to prevent it from freezing.
- To ensure proper operation of the climate control system fan, remove any snow that has accumulated on the air inlet vents in front of the windshield.
- Remove any ice that has accumulated on the vehicle chassis.
- Periodically check for and remove any excess ice or snow that may have accumulated in the wheel well or on the brakes.

When driving the vehicle

Accelerate the vehicle slowly and drive at a reduced speed suitable to the road conditions.

When parking the vehicle

Park the vehicle and move the shift lever to P without setting the parking brake. The parking brake may freeze up, preventing it from being released. If necessary, block the wheels to prevent inadvertent sliding or creeping.

Selection tire chains

Use the correct tire chain size when mounting the tire chains.
Chain size is regulated for each tire size.

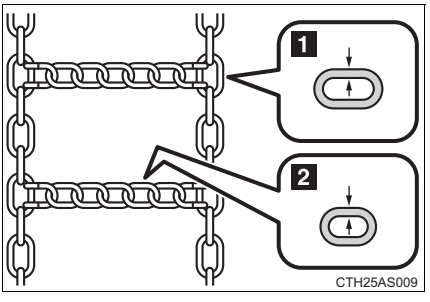

1 Side chain
(0.20 in. [5 mm] in diameter)

2 Cross chain
(0.20 in. [5 mm] in diameter)

Regulations on the use of tire chains

Regulations regarding the use of tire chains vary depending on location and type of road. Always check local regulations before installing chains.

Tire chain installation

Observe the following precautions when installing and removing chains:

- Install and remove tire chains in a safe location.
- Install tire chains on the rear tires only. Do not install tire chains on the front tires.
- Install tire chains on rear tires as tightly as possible. Retighten chains after driving 1/4 — 1/2 mile (0.5 — 1.0 km).
- Install tire chains following the instructions provided with the tire chains.

CAUTION

Driving with snow tires

Observe the following precautions to reduce the risk of accidents.
Failure to do so may result in a loss of vehicle control and cause death or serious injury.

- Use tires of the size specified.
- Maintain the recommended level of air pressure.
- Do not drive in excess of 75 mph (120 km/h), regardless of the type of snow tires being used.
- Use snow tires on all, not just some wheels.

Driving with tire chains

Observe the following precautions to reduce the risk of accidents.
Failing to do so may result in the vehicle being unable to be driven safely, and may cause death or serious injury.

- Do not drive in excess of the speed limit specified for the tire chains being used, or 30 mph (50 km/h), whichever is lower.
- Avoid driving on bumpy road surfaces or over potholes.
- Avoid sudden turns and braking, as use of chains may adversely affect vehicle handling.
- Slow down sufficiently before entering a curve to ensure that vehicle control is maintained.

NOTICE

Repairing or replacing snow tires

Request repairs or replacement of snow tires from Toyota dealers or legitimate tire retailers.
This is because the removal and attachment of snow tires affects the operation of the tire pressure warning valves and transmitters.

Fitting tire chains

The tire pressure warning valves and transmitters may not function correctly when tire chains are fitted.

Trailer towing

Your vehicle is designed primarily as a passenger-and-load carrying vehicle. Towing a trailer will have an adverse effect on handling, performance, braking, durability, and fuel consumption. For your safety and the safety of others, do not overload the vehicle or trailer.

To tow a trailer safely, use extreme care and drive the vehicle in accordance with the trailer's characteristics and operating conditions.
The vehicle stability and braking performance are affected by trailer stability, brake setting and performance, and the hitch.

Toyota warranties do not apply to damage or malfunction caused by towing a trailer for commercial purposes.

Contact your Toyota dealer for further information about additional requirements such as a towing kit, etc.

Weight limits

Confirm that the gross trailer weight, gross combination weight, gross vehicle weight, gross axle weight and trailer tongue load are all within the limits.

Engine	Driving system	Towing capacity	GCWR
2.7 L 4-cylinder (2TR-FE) engine	2WD	2000 lb. (907 kg)	7900 lb. (3583 kg)
4.0 L V6 (1GR-FE) engine	2WD	5000 lb. (2270 kg)	11100 lb. (5035 kg)
	4WD		11300 lb. (5125 kg)

- The gross trailer weight must never exceed towing capacity described in the table above.
- The gross combination weight must never exceed the GCWR described in the table above.

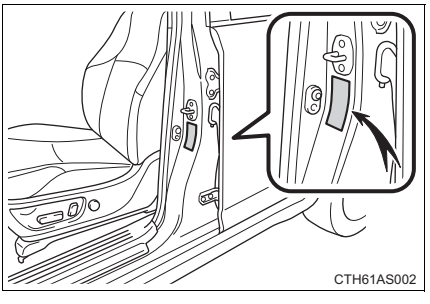

- The gross vehicle weight must never exceed the GVWR indicated on the Certification Label.
- The gross axle weight on each axle must never exceed the GAWR indicated on the Certification Label.

Towing related terms

Towing related term	Meaning
GVWR (Gross Vehicle Weight Rating)	The maximum allowable gross vehicle weight. The gross vehicle weight is the total weight of the vehicle. When towing a trailer, it is the sum of the vehicle weight (including the occupants, cargo and any optional equipment installed on the vehicle) and the tongue load.
GAWR (Gross Axle Weight Rating)	The maximum allowable gross axle weight. The gross axle weight is the load placed on each axle (front and rear).
GCWR (Gross Combination Weight Rating)	The maximum allowable gross combination weight. The gross combination weight is the sum of the total vehicle weight (including the occupants, cargo and any optional equipment installed on the vehicle) and the weight of the trailer being towed (including the cargo in the trailer).
Gross trailer weight	The sum of the trailer weight and the weight of the cargo in the trailer.
Towing capacity	The maximum allowable gross trailer weight. Towing capacity is calculated considering the base vehicle with necessary vehicle equipment and occupants. Additional optional equipment, passengers and cargo in the vehicle will reduce the towing capacity, gross trailer weight include the trailer, cargo and necessary equipment for towing.
Tongue load	The load placed on the trailer hitch ball

Trailer tongue load

- A recommended tongue load varies in accordance with the types of trailers or towing as described below.
- In order to ensure the recommended values shown below, the trailer must be loaded by referring to the following instructions.
  The trailer cargo load should be distributed so that the tongue load is 9 to 11% of the gross trailer weight, not exceeding the following.
  2.7 L 4-cylinder (2TR-FE) engine
  200 lb. (90.7 kg)
  4.0 L V6 (1GR-FE) engine
  500 lb. (227 kg)
  (Tongue load / Gross trailer weight × 100 = 9 to 11%)

  If the gross trailer weight is over 2000 lbs. (907 kg), it is necessary to use a sway control device with sufficient capacity.

The gross trailer weight and tongue load can be measured with platform scales found at a highway weighing station, building supply company, trucking company, junk yard, etc.

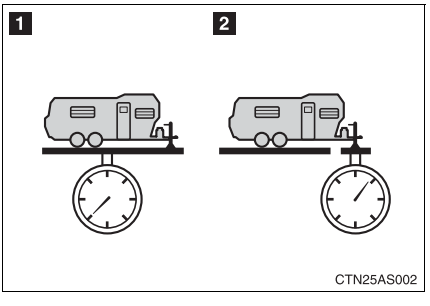

1 Gross trailer weight
2 Tongue load

Hitch and tow hitch receiver

Hitch

Trailer hitch assemblies have different weight capacities established by the hitch manufacturer. Even though the vehicle may be rated for towing a higher weight, the operator must never exceed the maximum weight rating specified for the trailer hitch.

Tow hitch receiver (if equipped)

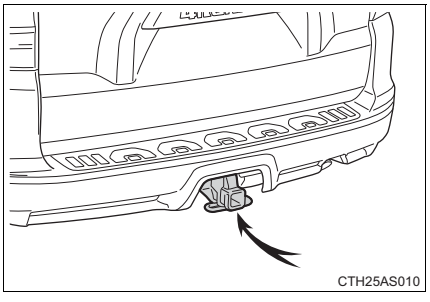

A tow hitch receiver installed under the rear bumper is rated for weight that does not exceed the vehicle's total towing weight.

Selecting a trailer ball

Use the correct trailer ball for your application.

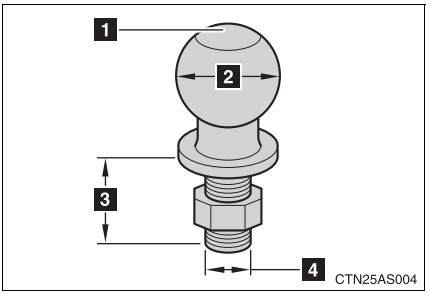

1 Trailer ball load rating

Matches or exceeds the gross trailer weight rating of the trailer.

2 Ball diameter

Matches the size of the trailer coupler. Most couplers are stamped with the required trailer ball size.

3 Shank length

Protrudes beyond the bottom of the lock washer and nut at least 2 threads.

4 Shank diameter

Matches the ball mount hole diameter size.

Connecting trailer lights

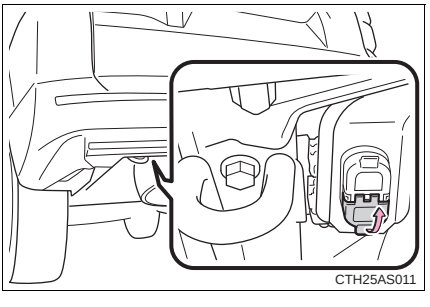

Use the wire harness stored in the rear end under body.

Trailer towing tips

Your vehicle will handle differently when towing a trailer. In order to avoid accident, death or serious injury, keep the following in mind when towing.

- Before starting out, check the trailer lights and the vehicle-trailer connections. Recheck after driving a short distance.
- Practice turning, stopping and reversing with the trailer attached in an area away from traffic until you become accustomed to the feel of the vehicle.
- Reversing with a trailer attached is difficult and requires practice. Grip the bottom of the steering wheel and move your hand to the left to move the trailer to the left. Move your hand to the right to move the trailer to right. (This is generally opposite to reversing without a trailer attached.) Avoid sharp or prolonged turning. Have someone guide you when reversing to reduce the risk of an accident.
- As stopping distance is increased when towing a trailer, vehicle-to vehicle distance should be increased. For each 10 mph (16 km/h) of speed, allow at least one vehicle and trailer length.
- Avoid sudden braking as you may skid, resulting in jackknifing and loss of control. This is especially true on wet or slippery surfaces.
- Avoid jerky starts or sudden acceleration.
- Avoid jerky steering and sharp turns, and slow down before making turns.

- Note that when making a turn, the trailer wheels will be closer than the vehicle wheels to the inside of the turn. Compensate by making a larger than normal turning radius.
- Crosswinds and rough roads will adversely affect handling of your vehicle and trailer, causing sway. Periodically check the rear to prepare for being passed by large trucks or buses, which may cause your vehicle and trailer to sway. If swaying occurs, firmly grip the steering wheel, reduce speed immediately but gradually, and steer straight ahead. Never increase speed. If you make no extreme correction with the steering or brakes, your vehicle and trailer will stabilize.
- Take care when passing other vehicles. Passing requires considerable distance. After passing a vehicle, do not forget the length of your trailer, and be sure you have plenty of room before changing lanes.
- In order to maintain engine braking efficiency when driving on a long steep downgrade, do not use overdrive. Transmission shift range position must be in 3 (standard type), or “4”, in the S mode (multi-mode type).
- Due to the added load of the trailer, your vehicle’s engine may overheat on hot days (at temperatures over 85°F [30°C]) when driving up a long or steep grade. If the engine coolant temperature gauge indicates overheating, immediately turn off the air conditioning (if in use), pull your vehicle off the road and stop in a safe spot. (→P. 604)

- Always place wheel blocks under both the vehicle and the trailer wheels when parking. Apply the parking brake firmly, and put the transmission in P. Avoid parking on a slope, but if unavoidable, do so only after performing the following:

STEP 1 Apply the brakes and keep them applied.

STEP 2 Have someone place wheel blocks under both the vehicle and trailer wheels.

STEP 3 When the wheel blocks are in place, release the brakes slowly until the blocks absorb the load.

STEP 4 Apply the parking brake firmly.

STEP 5 Shift into P and turn off the engine.

- When restarting after parking on a slope:

STEP 1 With the transmission in P, start the engine. Be sure to keep the brake pedal pressed.

STEP 2 Shift into D or R (if reversing).

STEP 3 Release the parking brake and brake pedal, and slowly pull or back away from the wheel blocks. Stop and apply the brakes.

STEP 4 Have someone retrieve the blocks.

■Service connector for towing brake controller

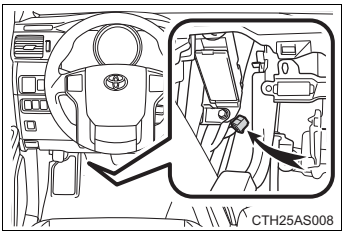

Your vehicle is equipped with a service connector for the trailer brake controller as shown.

■Before towing

Check that the following conditions are met:

- The vehicle's tires are properly inflated.
- Trailer tires are inflated according to the trailer manufacturer's recommendation.
- All trailer lights work.
- All lights work each time you connect them.
- The trailer ball is set up at the proper height for the coupler on the trailer.
- The vehicle remains level when a loaded or unloaded trailer is hitched. Do not drive if the vehicle is not level, and check for improper tongue load, overloading, worn suspension, or other possible causes.
- The trailer cargo is securely loaded.
- The rear view mirrors conform to all applicable federal, state/provincial or local regulations. If they do not, install rear view mirrors appropriate for towing purposes.

■Break-in schedule

If your vehicle is new or equipped with any new power train components (such as an engine, transmission, differential and wheel bearing), Toyota recommends that you do not tow a trailer until it has been driven for over 500 miles (800 km).
However, avoid full throttle acceleration.

Maintenance

- If you tow a trailer, your vehicle will require more frequent maintenance due to the additional load. (See “Scheduled Maintenance Guide” or “Owner’s Manual Supplement”.)
- Retighten the fixing bolts of the towing ball and bracket after approximately 600 miles (1000 km) of trailer towing.

CAUTION

Trailer towing precautions

- Follow all the instructions described in this section. Failure to do so could cause an accident resulting in death or serious injury.
- Exceeding the towing capacity, GVWR, GCWR and GAWR can cause an accident resulting in death or serious personal injuries.

To avoid accident or injury

- Do not exceed 45 mph (72 km/h) or the posted towing speed limit, whichever is lower. As instability (swaying) of the towing vehicle-trailer combination increases as speed increases, exceeding 45 mph (72 km/h) may cause loss of control.
- Slow down and downshift before descending steep or long downhill grades. Do not make sudden downshifts.
- Do not exceed the trailer hitch assembly weight, gross vehicle weight, gross axle weight and trailer tongue load capacities.
- Never load more weight in the back than in the front of the trailer. About 60% of the load should be in the front half of the trailer, and the remaining 40% in the rear.
- Do not use cruise control when you are towing.
- Avoid holding the brake pedal down too long or applying the brakes too frequently. This could cause the brakes to overheat and result in reduced braking efficiency.

CAUTION

■ **Hitches**

- If you wish to install a trailer hitch, contact your Toyota dealer.
- Use only a hitch that conforms to the gross trailer weight requirement.
- Follow the directions supplied by the hitch manufacturer.
- Lubricate the hitch ball with a light coat of grease.
- Remove the trailer hitch whenever you are not towing a trailer. After removing the hitch, seal any mounting hole in the vehicle body to prevent entry of any substances into the vehicle.

■ **When towing a trailer**

- If the gross trailer weight exceeds 1000 lb. (453 kg), trailer brakes are required. Toyota recommends trailers with brakes that conform to all applicable federal and state/provincial regulations.
- Never tap into your vehicle's hydraulic system, as this will lower the vehicle's braking effectiveness.
- Never tow a trailer without using a safety chain securely attached to both the trailer and the vehicle. If damage occurs to the coupling unit or hitch ball, there is a risk of the trailer wandering into another lane.

NOTICE

When installing a trailer hitch

- Use only the position recommended by your Toyota dealer. Do not install the trailer hitch on the bumper; this may cause body damage.
- Do not use axle-mounted hitches, as they can cause damage to the axle housing, wheel bearings, wheels or tires.

Safety chain

A safety chain must always be used between the towing vehicle and the trailer. Leave sufficient slack in the chain for turns. The chain should cross under the trailer tongue to prevent the tongue from dropping to the ground in the case that it becomes damaged or separated. For the correct safety chain installation procedure, ask your Toyota dealer.

Do not directly splice trailer lights

Directly splicing trailer lights may damage your vehicle's electrical system and cause a malfunction.

Dinghy towing

Your vehicle is not designed to be dinghy towed (with 4 wheels on the ground) behind a motor home.

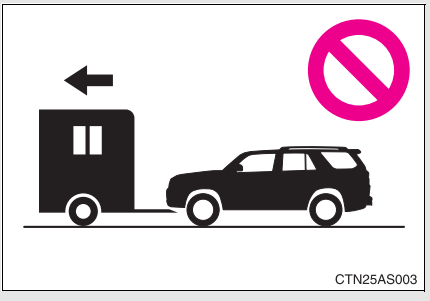

NOTICE

■ **To avoid serious damage to your vehicle**

Do not tow your vehicle with four wheels on the ground.

Interior features 3

3-1. Using the air conditioning system and defogger

Manual air conditioning system 296

Automatic air conditioning system 302

Rear window and outside rear view mirror defoggers 310

Windshield wiper de-icer 312

3-2. Using the audio system

Audio system types 313

Using the radio 317

Using the CD player 324

Playing MP3 and WMA discs 333

Operating an iPod 341

Operating a USB memory 348

Optimal use of the audio system 355

Using the AUX port 360

Using the steering wheel audio switches 361

Interior features 3

3-3. Using the Bluetooth® audio system

Bluetooth® audio system 364
Using the Bluetooth® audio system..... 367
Operating a Bluetooth® enabled portable player 372
Setting up a Bluetooth® enabled portable player 374
Bluetooth® audio system setup 379

3-4. Using the hands-free phone system (for cellular phone)

Hands-free phone system (for cellular phone) features..... 380
Using the hands-free phone system (for cellular phone)..... 384
Making a phone call..... 392
Setting a cellular phone..... 396
Security and system setup 401
Using the phone book..... 405

3-5. Using the interior lights

Interior lights list 413
• Interior lights 414
• Personal lights 414

3-6. Using the storage features

List of storage features 416
• Glove box..... 417
• Console box..... 418
• Coin holder 419
• Tissue pocket..... 420
• Pen holder 421
• Auxiliary box 422
• Cup holders 423
• Bottle holders..... 427

3-7. Other interior features

Sun visors 429
Vanity mirrors..... 430
Clock 431
Outside temperature display..... 433
Power outlets (12V DC)..... 436
Power outlets (120V AC) 439
Seat heaters..... 446
Armrest 448
Floor mat..... 449
Compass..... 450
Luggage compartment features..... 456
Garage door opener..... 462
Safety Connect 469

Manual air conditioning system*

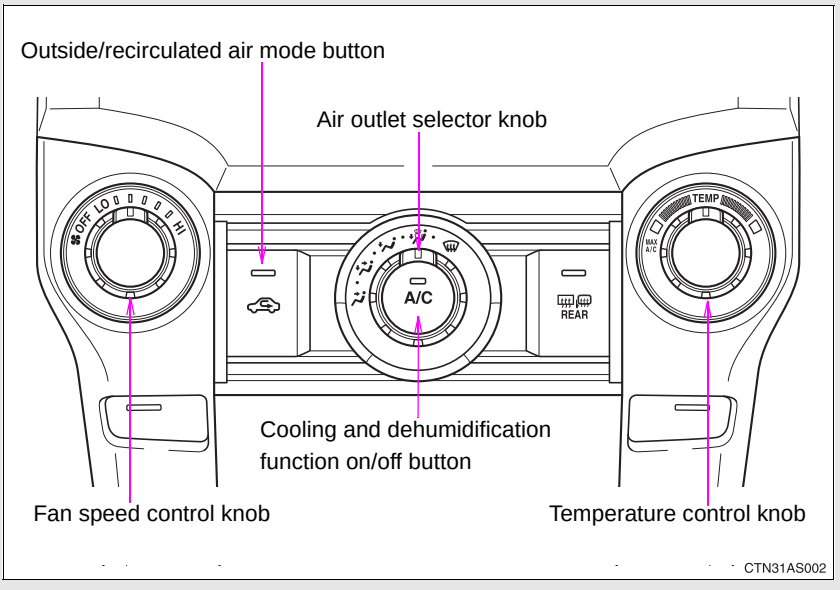

Adjusting the settings

Basic setting

STEP 1 To turn on the air conditioning system and adjust the fan speed, turn the fan speed control knob clockwise (increase) or counterclockwise (decrease).

Turning the knob to “OFF” turns off the fan.

*: If equipped

STEP 2 To adjust the temperature setting, turn the temperature control knob clockwise (warm) or counterclockwise (cool).

If A/C is not pressed, the system will blow ambient temperature air or heated air.

For quick cooling, turn the temperature control knob to “MAX A/C”. The air conditioning will automatically turn on and, if an air outlet position other than or is selected, the system will be set to recirculated air mode. While “MAX A/C” is selected, it is not possible to turn off the air conditioning.

STEP 3 To select the air outlets, set the air outlet selector knob to the desired position.

The positions between the air outlet selections shown below can also be selected for more delicate adjustment.

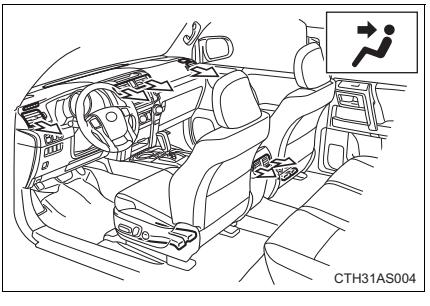

Air flows to the upper body.

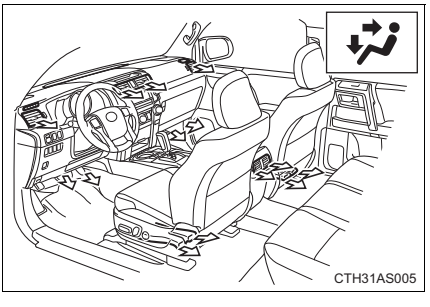

Air flows to the upper body and feet.

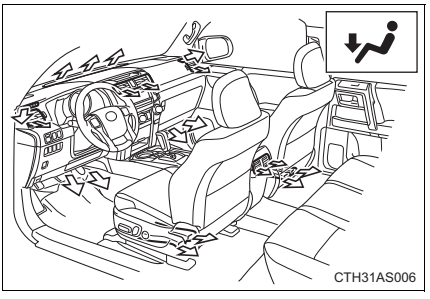

Air flows to the feet.

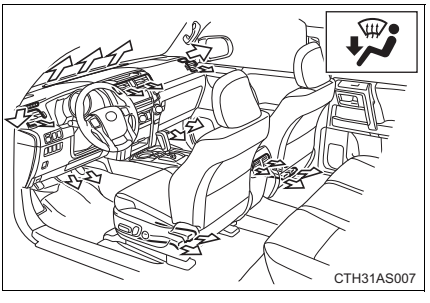

Air flows to the feet and the windshield defogger operates.

The air intake is automatically switched to outside air mode.

Pressing A/C to turn the cooling and dehumidification function on clears the windshield and side windows faster.

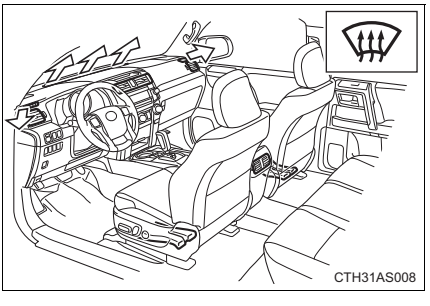

Air flows to the windshield and side windows.

The air intake is automatically switched to outside air mode. It is not possible to return to recirculated air mode when the switch is on.

Pressing A/C to turn the cooling and dehumidification function on clears the windshield and side windows faster.

■ Switching between outside air and recirculated air modes

Press .

The mode switches between outside air mode (introduces air from outside the vehicle) (indicator off) and recirculated air mode (recycles air inside the vehicle) (indicator on) each time the button is pressed.

Adjusting the position of and opening and closing the air outlets

Front center outlets

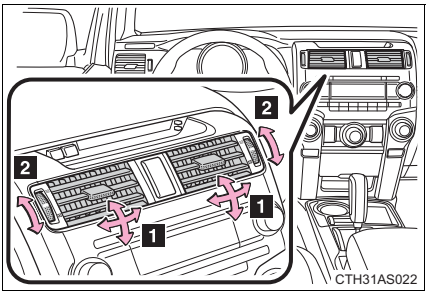

1 Direct air flow to the left or right, up or down.

2 Turn the knob to open or close the vent.

Front side outlets

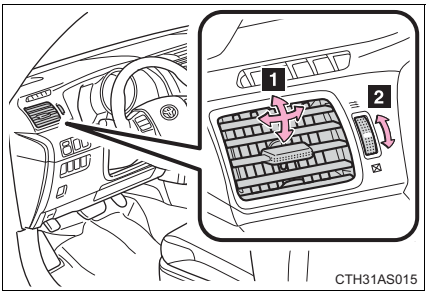

1 Direct air flow to the left or right, up or down.

2 Turn the knob to open or close the vent.

Rear outlets

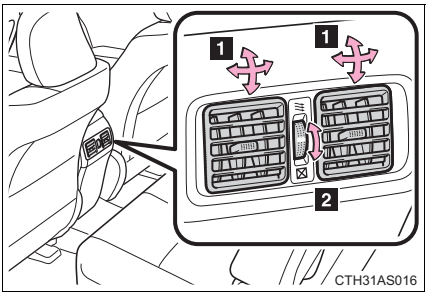

1 Direct air flow to the left or right, up or down.

2 Turn the knob to open or close the vent.

■ **Using the system in recirculated air mode**

The windows will fog up more easily if recirculated air mode is used for an extended period of time.

■ **Switching between outside air and recirculated air modes**

Recirculated air mode or outside air mode may be automatically switched to in accordance with the outside temperature, etc.

■ **When is selected for the air outlets used**

For your driving comfort, air flowing to the feet may be warmer than air flowing to the upper body depending on the temperature setting.

■ **When the indicator light on A/C flashes**

Press A/C to turn off the cooling and dehumidification function and turn it on again. There may be a problem in the air conditioning system if the indicator light continues to flash. Turn the air conditioning system off and have it inspected by your Toyota dealer.

■ **When outside air temperature is below 32°F (0°C)**

The cooling and dehumidification function may not operate even when A/C is pressed.

Air conditioning odors

- During use, various odors from inside and outside the vehicle may enter into and accumulate in the air conditioning system. This may then cause odor to be emitted from the vents.
- To reduce potential odors from occurring:
  It is recommended that the air conditioning system be set to outside air mode prior to turning the vehicle off.

CAUTION

To prevent the windshield from fogging up

Do not use during cool air operation in extremely humid weather. The difference between the temperature of the outside air and that of the windshield can cause the outer surface of the windshield to fog up, blocking your vision.

NOTICE

To prevent battery discharge

Do not leave the air conditioning system on longer than necessary when the engine is stopped.

Automatic air conditioning system*

Air outlets and fan speed are automatically adjusted according to the temperature setting.

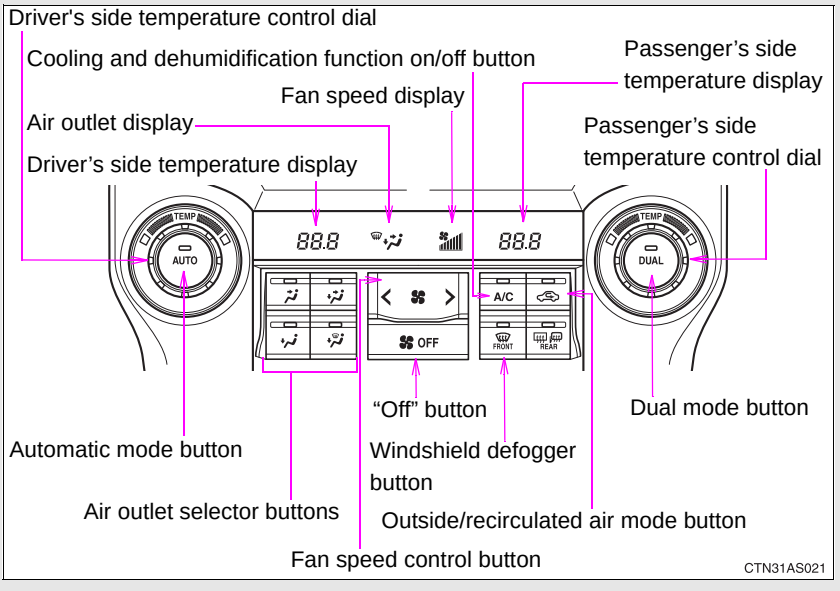

*: If equipped

Using the automatic air conditioning system

STEP 1 Press AUTO .

The air conditioning system begins to operate. Air outlets and fan speed are automatically adjusted according to the temperature setting.

STEP 2 Turn AUTO clockwise to increases the temperature and turn AUTO counterclockwise to decreases the temperature on the driver's side.

When DUAL is pressed (the indicator on DUAL is on) or the passenger's side temperature control dial is turned, the temperature for the driver and passenger seats can be adjusted separately.

Adjusting the settings manually

■ Basic setting

STEP 1 To turn on the air conditioning system and adjust the fan speed, press “>” on to increase the fan speed and “<” to decrease the fan speed.

Press OFF to turn the fan off.

STEP 2 To adjust the temperature setting, turn AUTO clockwise to increases the temperature and AUTO counterclockwise to decreases the temperature.

When DUAL is pressed (the indicator on DUAL is on) or the passenger’s side temperature control dial is turned, the temperature for the driver and passenger seats can be adjusted separately.

STEP 3 To change the air outlets, press , , or .

The air flow shown on the display indicates the following:

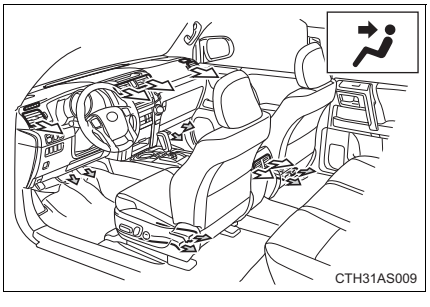

Air flows to the upper body.

: May occur in automatic mode

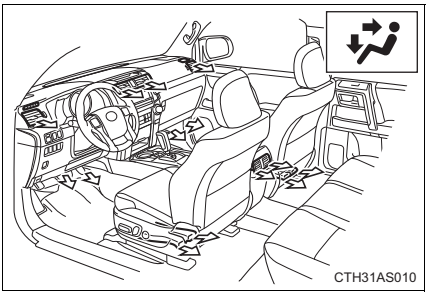

Air flows to the upper body and feet.

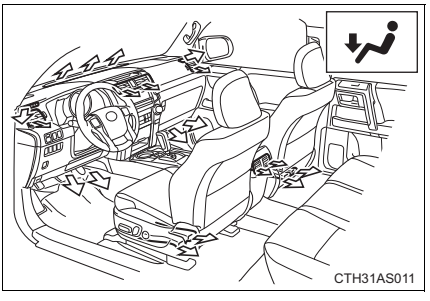

Air flows to the feet.

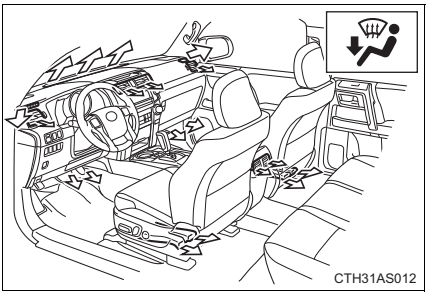

Air flows to the feet and the windshield defogger operates.

The air intake is automatically switched to outside air mode.

Switching between outside air and recirculated air modes

Press .

The mode switches between outside air mode (the indicator is off) and recirculated air mode (the indicator is on) each time the button is pressed.

Defogging the windshield

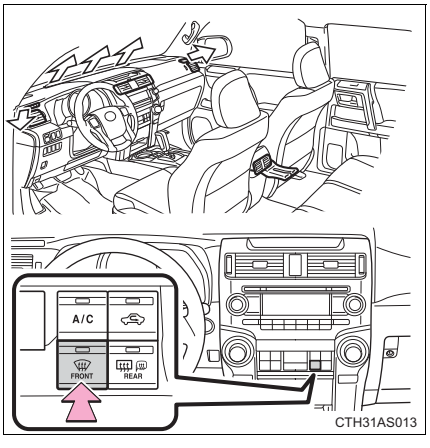

Defogging

The air conditioning system operates automatically.

The air intake is automatically switched to outside air mode. It is not possible to return to recirculated air mode when the switch is on.

Adjusting the position of and opening and closing the air outlets

Front center outlets

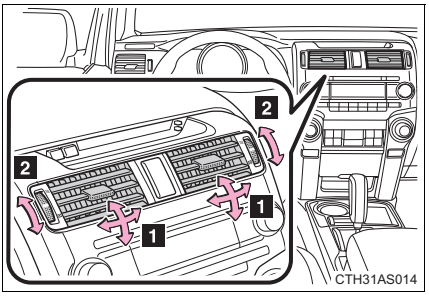

1 Direct air flow to the left or right, up or down.

2 Turn the knob to open or close the vent.

Front side outlets

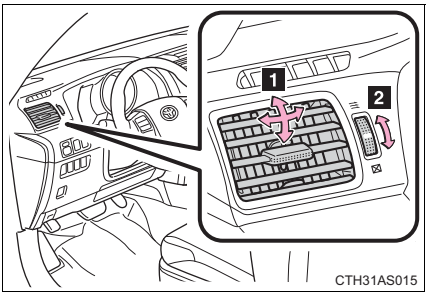

1 Direct air flow to the left or right, up or down.

2 Turn the knob to open or close the vent.

Rear outlets

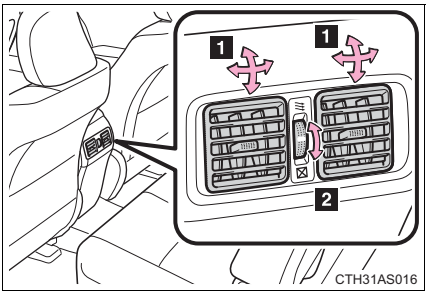

1 Direct air flow to the left or right, up or down.

2 Turn the knob to open or close the vent.

■Using automatic mode

Fan speed is adjusted automatically according to the temperature setting and ambient conditions. As a result, the following may occur:

- The system may switch automatically to recirculated air mode when the coolest temperature setting is selected when the ambient temperature is high.
- Immediately after the switch is pressed, the fan may stop for a while until warm or cool air is ready to flow.
- Cool air may flow to the area around the upper body when the heater is on.

■Switching between outside air and recirculated air modes

Recirculated air mode or outside air mode may be automatically switched to in accordance with the temperature setting, the outside temperature, etc.

■Using the system in recirculated air mode

The windows will fog up more easily if recirculated air mode is used.

■Window defogger feature

Recirculated air mode may automatically switch to outside air mode in situations where the windows need to be defogged.

■When is selected for the air outlets used

For your driving comfort, air flowing to the feet may be warmer than air flowing to the upper body depending on the temperature setting.

■When driving on dusty roads

Close all windows. If dust thrown up by the vehicle is still drawn into the vehicle after closing the windows, it is recommended that the air intake mode be set to outside air mode and the fan speed to any setting except off.

When outside air temperature is below 32°F (0°C)

The cooling and dehumidification function may not operate even when A/C is pressed.

When the indicator light on A/C flashes

Press A/C to turn off the cooling and dehumidification function and turn it on again. There may be a problem in the air conditioning system if the indicator light continues to flash. Turn the air conditioning system off and have it inspected by your Toyota dealer.

Air conditioning odors

- During use, various odors from inside and outside the vehicle may enter into and accumulate in the air conditioning system. This may then cause odor to be emitted from the vents.
- To reduce potential odors from occurring:
  - It is recommended that the air conditioning system be set to outside air mode prior to turning the vehicle off.
  - The start timing of the blower may be delayed for a short period of time immediately after the air conditioning system is started in automatic mode.

CAUTION

To prevent the windshield from fogging up

Do not use FRONT during cool air operation in extremely humid weather. The difference between the temperature of the outside air and that of the windshield can cause the outer surface of the windshield to fog up, blocking your vision.

NOTICE

To prevent battery discharge

Do not leave the air conditioning system on longer than necessary when the engine is stopped.

Rear window and outside rear view mirror defoggers

Defoggers are used to defog the rear window, and to remove raindrops, dew and frost from the outside rear view mirrors.

Before operating the defoggers, make sure the back window is completely closed. (→P. 94)

Vehicles with a manual air conditioning system

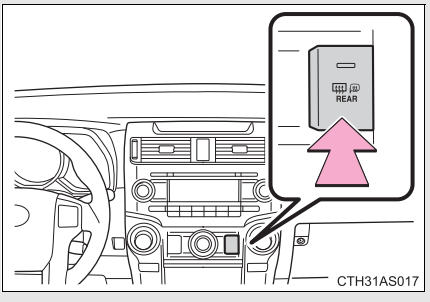

Turns the defoggers on/off

The defoggers will automatically turn off after their operation time. The operation time varies depending on the ambient temperature and vehicle speed.

Vehicles with an automatic air conditioning system

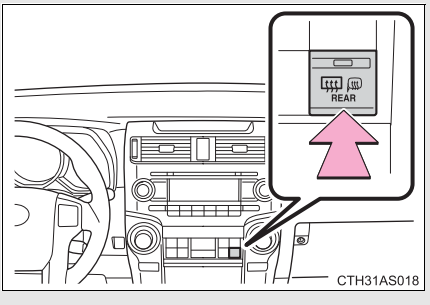

Turns the defoggers on/off

The defoggers will automatically turn off after their operation time. The operation time varies depending on the ambient temperature and vehicle speed.

■ **The defoggers can be operated when**

● **Vehicles without a smart key system:**
The engine switch is in the “ON” position.

Vehicles with a smart key system:
The “ENGINE START STOP” switch is in IGNITION ON mode.

● The back window is completely closed.

■ **The outside rear view mirror defoggers**

Turning the rear window defogger on will turn the outside rear view mirror defoggers on.

CAUTION

■ **When the outside rear view mirror defoggers are on**

Do not touch outside surface of the rear view mirrors, as they can become very hot and burn you.

Windshield wiper de-icer*

This feature is used to prevent ice from building up on the windshield and wiper blades.

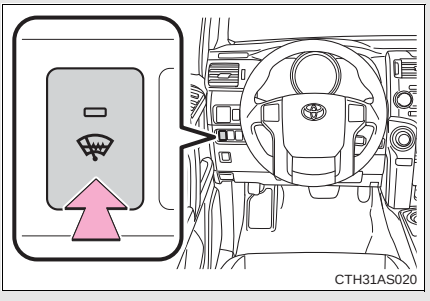

Turns the windshield wiper de-icer on/off

The windshield wiper de-icer will automatically turn off after approximately 15 minutes.

■ **The windshield wiper de-icer can be operated when**

Vehicles without a smart key system

The engine switch is in the “ON” position.

Vehicles with a smart key system

The “ENGINE START STOP” switch is in IGNITION ON mode.

CAUTION

■ **When the windshield wiper de-icer is on**

Do not touch the lower part of the windshield or the side of the front pillars, as the surfaces can become very hot and burn you.

*: If equipped

With a navigation system

Owners of models equipped with a navigation system should refer to the “Navigation System Owner's Manual”.

Without a navigation system

Type A: CD player with changer controller and AM/FM radio

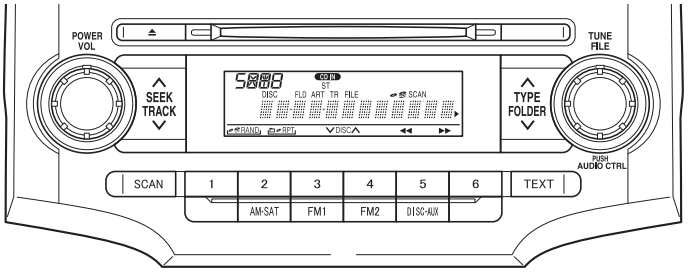

CTN32AS044

Type B: CD player with changer controller and AM/FM radio

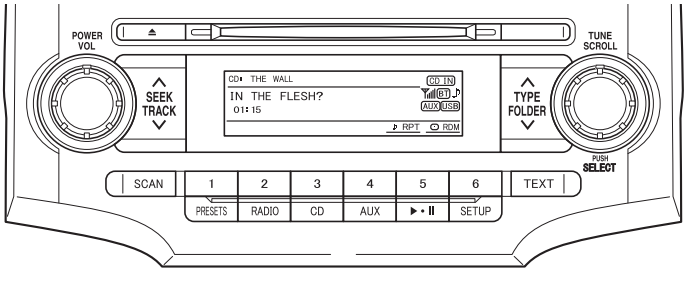

CTN32AS002

Type C: CD player with changer and AM/FM radio

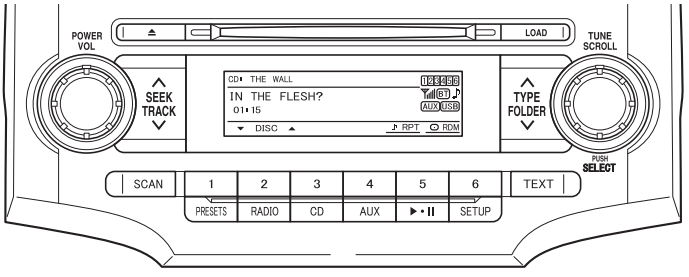

CTN32AS003

Title	Page
Using the radio	P. 317
Using the CD player	P. 324
Playing MP3 and WMA discs	P. 333
Operating an iPod	P. 341
Operating a USB memory	P. 348
Optimal use of the audio system	P. 355
Using the AUX port	P. 360
Using the steering wheel audio switches	P. 361

Language settings (type B and C)

The language used for all voice guidance, voice recognition and messages may be changed.

STEP 1 Press SETUP .

STEP 2 Press 6 (MORE).

STEP 3 Press 3 (LANG).

STEP 4 Press 2 or 3 as corresponds to the desired language.

For vehicles sold in the U.S.A.

"ENG" (English) or "ESP" (Spanish)

For vehicles sold in Canada

"ENG" (English) or "FRAN" (French)

Using cellular phones

Interference may be heard through the audio system's speakers if a cellular phone is being used inside or close to the vehicle while the audio system is operating.

Certification for the audio system

This device complies with part 15 of the FCC Rules and RSS-Gen of the IC Rules. Operation is subject to the following two conditions: (1) This device may not cause harmful interference, and (2) this device must accept any interference received, including interference that may cause undesired operation.

CAUTION

■ **For vehicles sold in the U.S.A. and Canada**

● Part 15 of the FCC Rules and RSS-Gen of the IC Rules

FCC Warning:
Changes or modifications not expressly approved by the party responsible for compliance could void the user's authority to operate the equipment.

● Laser products

- Do not take this unit apart or attempt to make any changes yourself.
  This is an intricate unit that uses a laser pickup to retrieve information from the surface of compact discs. The laser is carefully shielded so that its rays remain inside the cabinet. Therefore, never try to disassemble the player or alter any of its parts since you may be exposed to laser rays and dangerous voltages.
- This product utilizes a laser.
  Use of controls or adjustments or performance of procedures other than those specified herein may result in hazardous radiation exposure.
- The use of optical instruments with this product will increase eye hazard.

NOTICE

■ **To prevent battery discharge**

Do not leave the audio system on longer than necessary with the engine off.

■ **To avoid damaging the audio system**

Take care not to spill drinks or other fluids over the audio system.

Type A

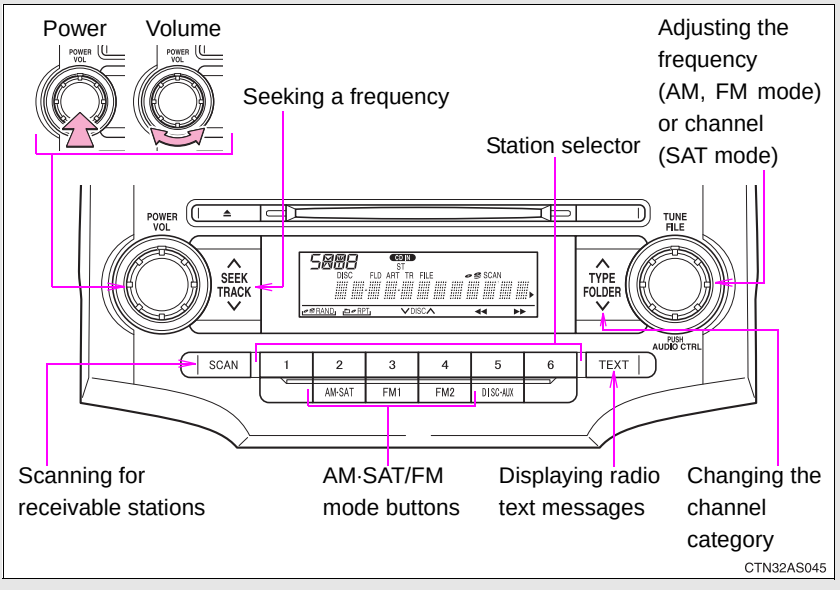

Type B and C

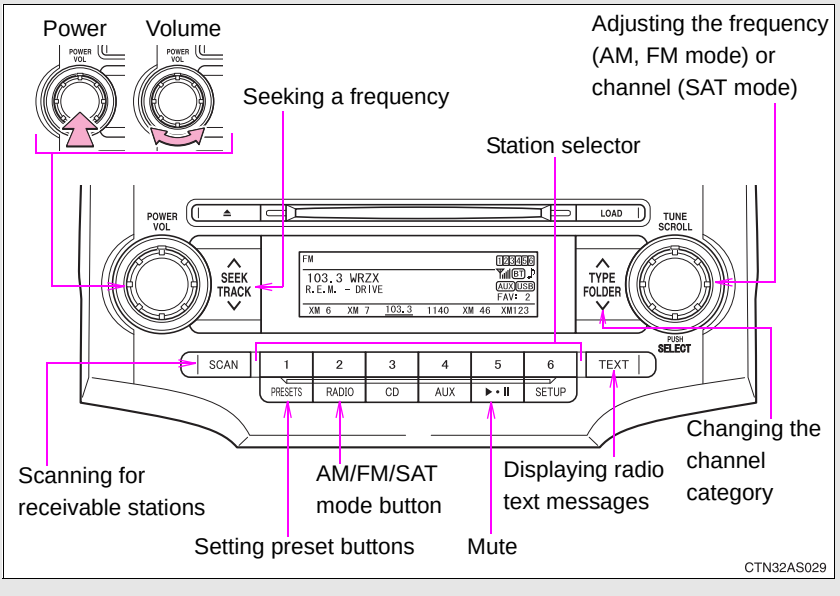

Setting station presets (excluding XM® Satellite Radio)

STEP 1 Search for desired stations by turning or 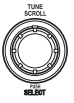 or pressing "∧" or "∨" on .

STEP 2 Press and hold a button (from 1 to 6) until you hear a beep.

Type B and C: Each time PRESETS is pressed, station pages are changed. There are a total of 6 pages.

Scanning radio stations (excluding XM® Satellite Radio)

■ Scanning the preset radio stations

STEP 1 Press and hold SCAN until you hear a beep.

Preset stations will be played for 5 seconds each.

STEP 2 When the desired station is reached, press SCAN again.

■ Scanning all radio stations within range

STEP 1 Press SCAN.

All the stations with reception will be played for 5 seconds each.

STEP 2 When the desired station is reached, press SCAN again.

■ Displaying radio text messages (for type B and C, FM mode only)

When a new radio text message is received, "MSG" is shown on the display. To display the message, press TEXT.

If the text continues past the end of the display, " ▶ " is displayed. Press and hold TEXT until you hear a beep.

Text messages are not displayed while driving.

XM® Satellite Radio (if equipped)

■ Receiving XM® Satellite Radio

STEP 1 Press AM-SAT or RADIO .

The display changes as follows each time AM-SAT or RADIO is pressed.

Type A: AM → SAT1 → SAT2 → SAT3

Type B and C: AM → FM → SAT

STEP 2 Turn TUNE FILE or TUNE SCROLL to select the desired channel in all the categories or press "∧" or "∨" on SEEK TRACK to select the desired channel in the current category.

■ Setting XM® Satellite Radio channel presets

Select the desired channel. Press and hold a button (from 1 to 6) until you hear a beep.

Type B and C: Each time PRESETS is pressed, station pages are changed. There are a total of 6 pages.

■ Changing the channel category

Press "∧" or "∨" on TYPE FOLDER .

Scanning XM® Satellite Radio channels

● Scanning channels in the current category

STEP 1 Press SCAN .

STEP 2 When the desired channel is reached, press SCAN again.

● Scanning the preset channels

STEP 1 Press and hold SCAN until you hear a beep.

STEP 2 When the desired channel is reached, press SCAN again.

Displaying text information

Press TEXT .

Each time TEXT is pressed, the display changes in the following order:
Type A: Channel name → Title (song/program title) → Name (artist name/feature) → Channel number.

Type B and C: Title (song/program title) → Name (artist name/feature)/Title (song/program title).

■ **When the battery is disconnected**

All preset stations are erased. (type A only)

■ **Reception sensitivity**

- Type B and C — Cargo loaded on the roof luggage carrier, especially metal objects, may adversely affect the reception of XM® Satellite Radio.
- Maintaining perfect radio reception at all times is difficult due to the continually changing position of the antenna, differences in signal strength and surrounding objects, such as trains, transmitters, etc.
- The radio antenna is mounted on the right-side front fender. The antenna can be removed from the base by turning it.

■ **XM® Satellite Radio**

An XM® Satellite Radio is a tuner designed exclusively to receive broadcasts provided under a separate subscription. Availability is limited to the 48 contiguous states and 10 Canadian provinces.

- XM® subscriptions
  For detailed information about XM® Satellite Radio or to subscribe:
  U.S.A. —
  Visit on the web at www.xmradio.com or call 1-800-967-2346.
  Canada —
  Visit on the web at www.xmradio.ca or call 1-877-438-9677.
- Radio ID
  You will need the radio ID when activating XM® service or reporting a problem. Select “CH000” using

or

, and the receiver's 8-character ID number will appear.
- Satellite tuner
  The tuner supports only Audio Services (Music and Talk) and the accompanying Text Information of XM® Satellite Radio.

■ If XM® Satellite Radio does not operate normally

If a problem occurs with the XM® tuner, a message will appear on the display. Refer to the table below to identify the problem, and take the suggested corrective action.

ANTENNA or CHECK ANTENNA	The XM® antenna is not connected. Check whether the XM® antenna cable is attached securely.
	There is a short-circuit in the antenna or the surrounding antenna cable. See a Toyota certified dealer.
UPDATING or CHANNEL NOT AUTHORIZED	You have not subscribed to XM® Satellite Radio. The radio is being updated with the latest encryption code. Contact XM® Satellite Radio for subscription information. When a contract is canceled, you can choose the “CH000” and all free-to-air channels.
	The premium channel you selected is not authorized. Wait for about 2 seconds until the radio returns to the previous channel or “CH001”. If it does not change automatically, select another channel. If you want to listen to the premium channel, contact XM® Satellite Radio.
NO SIGNAL	The XM® signal is too weak at the current location. Wait until your vehicle reaches a location with a stronger signal.
LOADING	The unit is acquiring audio or program information. Wait until the unit has received the information.
OFF AIR or CHANNEL OFF AIR	The channel you selected is not broadcasting any programming. Select another channel.
-----	There is no song/program title or artist name/feature associated with the channel at this time. No action needed.

--- or CHANNEL NOT AVAILABLE	The channel you selected is no longer available. Wait for about 2 seconds until the radio returns to the previous channel or “CH001”. If it does not change automatically, select another channel.

Contact the XM® Listener Care Center at 1-800-967-2346 (U.S.A.) or 1-877-438-9677 (Canada)

Certifications for the radio tuner

This equipment has been tested and found to comply with the limits for a class B digital device, pursuant to Part 15 of the FCC Rules. These limits are designed to provide reasonable protection against harmful interference in a residential installation. This equipment generates, uses and can radiate radio frequency energy and, if not installed and used in accordance with the instructions, may cause harmful interference to radio communications. However, there is no guarantee that interference will not occur in a particular installation.

If this equipment does cause harmful interference to radio or television reception, which can be determined by turning the equipment off and on, the user is encouraged to try to correct the interference by trying one or more of the following:

- Reorienting or relocating the receiving antenna.
- Increasing the separation between the equipment and receiver.
- Connecting the equipment into an outlet on a circuit different from that to which the receiver is connected.
- Consulting the dealer or an experienced radio/TV technician for help.

NOTICE

To prevent damage, remove the antenna in the following cases.

- The antenna will touch the ceiling of a garage.
- A cover will be put on the vehicle.

Type A

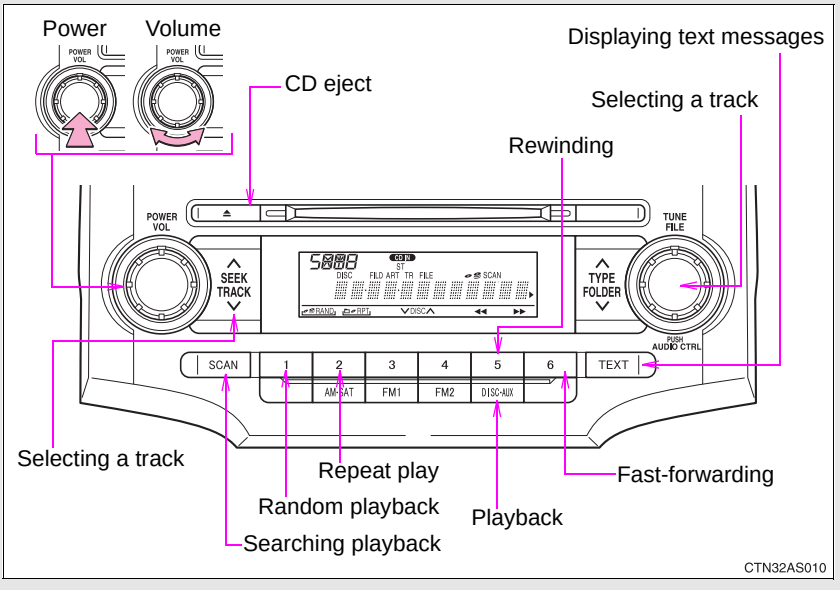

Type B and C

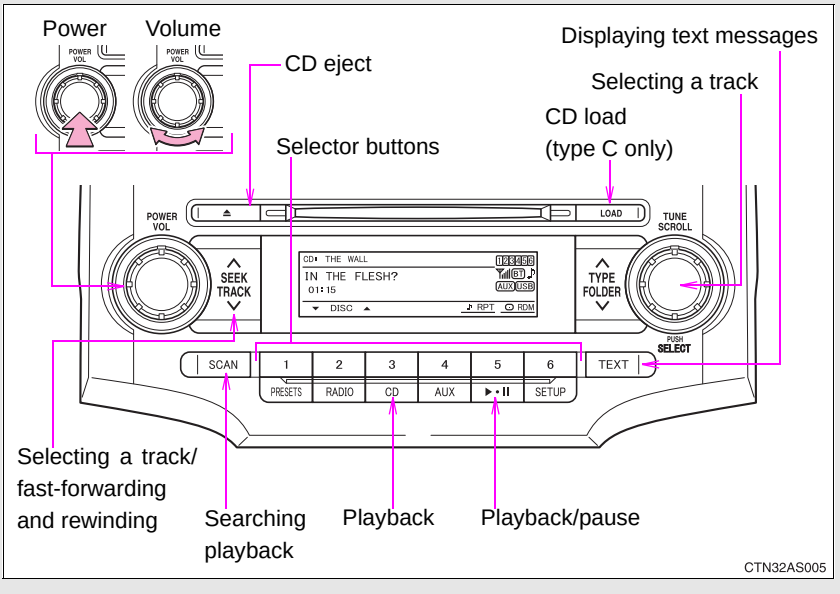

Loading CDs

■ Loading a CD (type A and B)

Insert a CD.

■ Loading a CD (type C)

STEP 1 Press LOAD .

STEP 2 When the indicator on the slot turns from amber to green, insert a CD.

■ Loading multiple CDs (type C only)

STEP 1 Press and hold LOAD until you hear a beep.

STEP 2 When the indicator on the slot turns from amber to green, insert a CD.

The indicator on the slot turns to amber when the CD is inserted.

STEP 3 When the indicator on the slot turns from amber to green again, insert the next CD.

Repeat the procedure for the remaining CDs.

To cancel, press CD . If you do not insert a disc within 15 seconds, loading will be canceled automatically.

Ejecting CDs

■ Ejecting a CD (type A and B)

Press [⏏] and remove the CD.

■ Ejecting a CD (type C)

STEP 1 To select the CD to be ejected, press [1] (▼) or [2] (▲).

The selected CD number is shown on the display.

STEP 2 Press [⏏] and remove the CD.

■ Ejecting all the CDs (type C only)

Press and hold [⏏] until you hear a beep, and then remove the CDs.

Selecting a track

Press "∧" to move up or "∨" to move down using [SEEK TRACK] until the desired track number is displayed.

Fast-forwarding and rewinding tracks

Type A: Press [5] (◀◀) or [6] (▶▶).

Type B and C: Press and hold "∧" or "∨" on [SEEK TRACK].

Scanning tracks

STEP 1 Press SCAN .

The first ten seconds of each track will be played.

To cancel, press SCAN again.

STEP 2 Press SCAN again when the desired track is reached.

Selecting a CD (type C only)

■ Selecting a CD to play

Press 1 (▼) or 2 (▲).

■ Scanning loaded CDs

STEP 1 Press and hold SCAN until you hear a beep.

The first ten seconds of the first track on each CD will be played.

To cancel, press SCAN again.

STEP 2 Press SCAN again when the desired CD is reached.

Playing and pausing tracks (type B and C)

Press ▶·II .

Random playback

Current CD

Press 1 (RAND) or 6 (RDM).

Songs are played in random order.

To cancel, press the button once more (type A and B), or twice more (type C).

All CDs (type C only)

Press 6 (RDM) twice.

Tracks on all loaded CDs are played in random order.

To cancel, press the button again.

Repeat play

Repeating a track

Press 2 (RPT) or 5 (RPT).

To cancel, press the button once more (type A and B), or twice more (type C).

Repeating all of the tracks on a CD (type C only)

Press 5 (RPT) twice.

To cancel, press the button again.

Switching the display

Press TEXT .

Each time TEXT is pressed, the display changes in the following order:

Type A: Track no./Elapsed time → CD title → Track name.

Type B and C: Track title → Track name/Artist name → Track name/Elapsed time.

■Display (type A only)

Up to 12 characters can be displayed at a time.

If there are 13 characters or more, pressing and holding TEXT for 1 second or more will display the remaining characters.
A maximum of 24 characters can be displayed.

If TEXT is pressed for 1 second or more again or has not been pressed for 6 seconds or more, the display will return to the first 12 characters.

Depending on the contents recorded, the characters may not be displayed properly or may not be displayed at all.

■ Error messages

“CD CHECK”: This indicates a problem either with the CD or inside the player. The CD may be dirty, damaged or inserted up-side down.

“WAIT” or “PLEASE WAIT”: Operation has stopped due to a high temperature inside the player. Wait for a while and then press DISC·AUX or CD. Contact your Toyota dealer if the CD still cannot be played back.

■ Discs that can be used

Discs with the marks shown below can be used.
Playback may not be possible depending on the recording format or disc features, or due to scratches, dirt or deterioration.

CDs with copy-protection features may not be used.

■ CD player protection feature

To protect the internal components, playback is automatically stopped when a problem is detected while the CD player is being used.

■ If CDs are left inside the CD player or in the ejected position for extended periods

CDs may be damaged and may not play properly.

■ Lens cleaners

Do not use lens cleaners. Doing so may damage the CD player.

NOTICE

■CDs and adapters that cannot be used

Do not use the following types of CDs, 3 in. (8 cm) CD adapters or Dual Discs.
Doing so may damage the CD player and/or the CD insert/eject function.

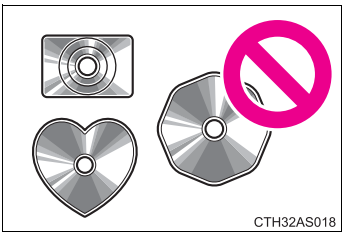

●CD player with changer and AM/FM radio: CDs that have a diameter that is not 4.7 in. (12 cm)

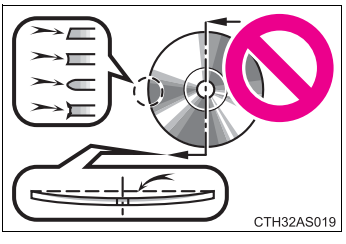

●Low-quality and deformed CDs

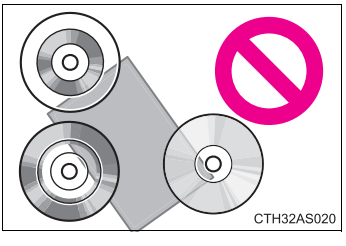

●CDs with a transparent or translucent recording area

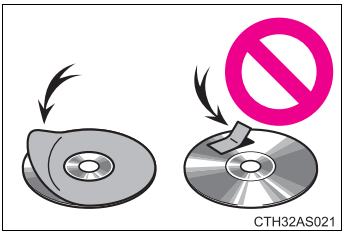

●CDs that have had tape, stickers or CD-R labels attached to them, or that have had the label peeled off

NOTICE

CD player precautions

Failure to follow the precautions below may result in serious damage to the CDs or the player itself.

- Do not insert anything other than CDs into the CD slot.
- Do not apply oil to the CD player.
- Store CDs away from direct sunlight.
- Never try to disassemble any part of the CD player.

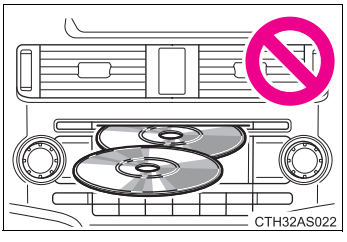

- Do not insert more than one CD at a time.

Type A

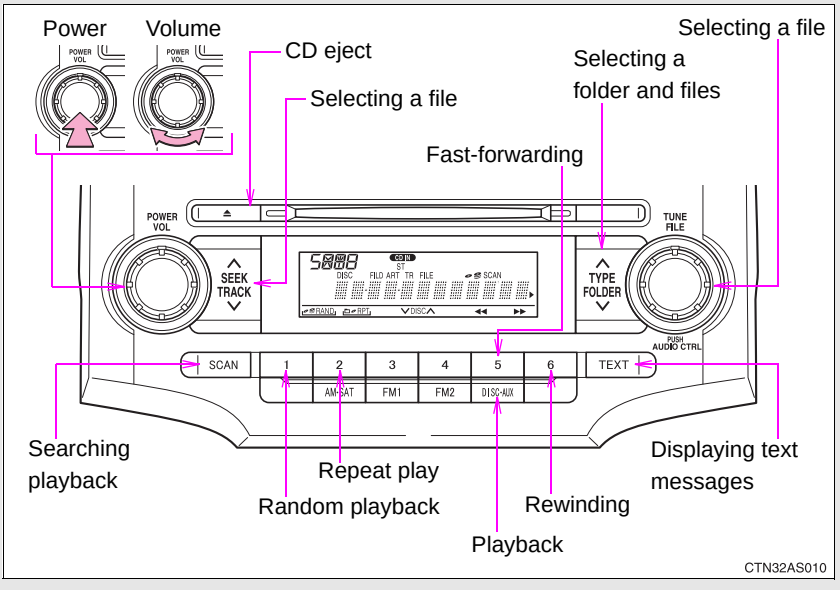

Type B and C

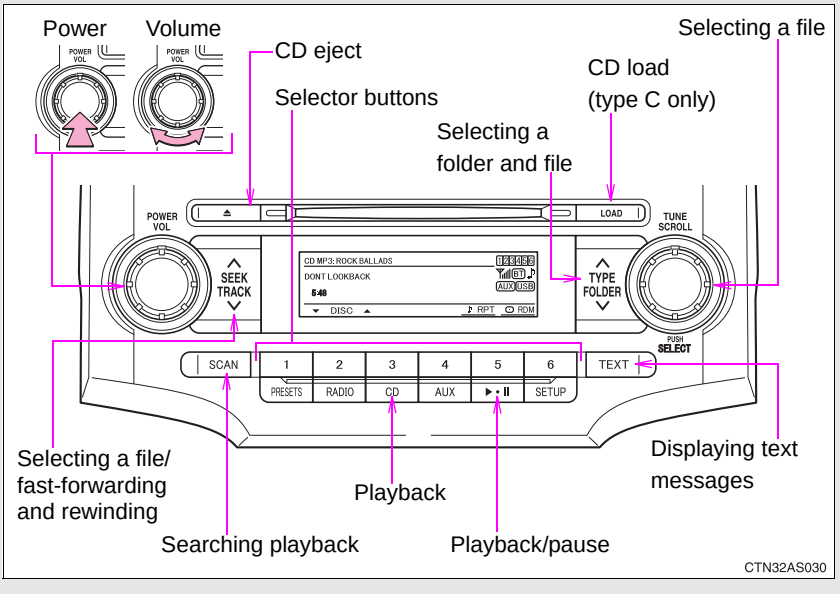

Loading and ejecting MP3 and WMA discs

→P. 325

Selecting MP3 and WMA discs (type C only)

→P. 326

Selecting and scanning a folder

■ Selecting folders one at a time

Press "∧" or "∨" on

to select the desired folder.

■ Scanning the first file of all the folders

STEP 1 Press and hold

until you hear a beep.

The first ten seconds of the first file in each folder will be played.

STEP 2 When the desired folder is reached, press

again.

■ Returning to the first folder

Press and hold "∨" on

until you hear a beep.

Selecting and scanning files

■ Selecting one file at a time

Turn

or

or press "∧" or "∨" on

to select the desired file.

■ Selecting the desired file by cueing the files in the folder

Press SCAN .

When the desired file is reached, press SCAN once again.

Fast-forwarding and rewinding files

Type A: Press 5 (◀◀) or 6 (▶▶).

Type B and C: Press and hold "∧" or "∨" on SEEK TRACK .

Playing and pausing files (type B and C)

Press ▶•II .

Random playback

■ Playing files from a particular folder in random order

Press 1 (RAND) or 6 (RDM).

To cancel, press the button once more (type A and B), or twice more (type C).

■ Playing all of the files on a disc in random order (type C only)

Press 6 (RDM) twice.

To cancel, press the button again.

Repeat play

Repeating a file

Press 2 (RPT) or 5 (RPT).

To cancel, press the button once more (type A and B), or twice more (type C).

Repeating all of the files in a folder

Type A: Press and hold 2 (RPT) until you hear a beep.

Type B and C: Press 5 (RPT) twice.

To cancel, press the button once more (type A and B), or twice more (type C).

Repeating all of the files in a disc (type C only)

Press 5 (RPT) three times.

To cancel, press the same button again.

Switching the display

Press TEXT .

Each time TEXT is pressed, the display changes in the following order:

Type A: Folder no./File no./Elapsed time → Folder name → File name → Album title (MP3 only) → Track title → Artist name.

Type B and C: Track title → Track title/Artist name → Track title/Album name (MP3 only) → Track title/Elapsed time.

■ **Display (type A only)**

→P. 329

■ **Error messages**

“CD CHECK”: This indicates a problem either with the CD or inside the player. The CD may be dirty, damaged or inserted up-side down.

“WAIT” or “PLEASE WAIT”: Operation has stopped due to a high temperature inside the player. Wait for a while and then press DISC·AUX or CD. Contact your Toyota dealer if the CD still cannot be played.

■ **Discs that can be used**

→P. 330

■ **CD player protection feature**

→P. 330

■ **If CDs are left inside the CD player or in the ejected position for extended periods**

→P. 330

■ **Lens cleaners**

→P. 330

■ MP3 and WMA files

MP3 (MPEG Audio LAYER3) is a standard audio compression format.

Files can be compressed to approximately 1/10 of their original size by using MP3 compression.

WMA (Windows Media® Audio) is a Microsoft audio compression format.

This format compresses audio data to a size smaller than that of the MP3 format.

There is a limit to the MP3 and WMA file standards that can be used and to the media/formats on which the files are recorded.

● MP3 file compatibility

- Compatible standards
  MP3 (MPEG1 LAYER3, MPEG2 LSF LAYER3)
- Compatible sampling frequencies
  MPEG1 LAYER3: 32, 44.1, 48 (kHz)
  MPEG2 LSF LAYER3: 16, 22.05, 24 (kHz)
- Compatible bit rates (Compatible with VBR)
  MPEG1 LAYER3: 64, 80, 96, 112, 128, 160, 192, 224, 256, 320 (kbps)
  MPEG2 LSF LAYER3: 64, 80, 96, 112, 128, 144, 160 (kbps)
- Compatible channel modes: stereo, joint stereo, dual channel and monaural

● WMA file compatibility

- Compatible standards
  WMA Ver. 7, 8, 9
- Compatible sampling frequencies
  32, 44.1, 48 (kHz)
- Compatible bit rates (Only compatible with 2-channel playback)
  Ver. 7, 8: CBR 48, 64, 80, 96, 128, 160, 192 (kbps)
  Ver. 9: CBR 48, 64, 80, 96, 128, 160, 192, 256, 320 (kbps)

● Compatible media

Media that can be used for MP3 and WMA playback are CD-Rs and CD-RWs.

Playback in some instances may not be possible if the CD-R or CD-RW is not finalized. Playback may not be possible or the audio may jump if the disc is scratched or marked with fingerprints.

● Compatible disc formats

The following disc formats can be used.

- Disc formats: CD-ROM Mode 1 and Mode 2
  CD-ROM XA Mode 2, Form 1 and Form 2
- File formats: ISO9660 Level 1, Level 2, (Romeo, Joliet)
  MP3 and WMA files written in any format other than those listed above may not play correctly, and their file names and folder names may not be displayed correctly.

Items related to standards and limitations are as follows.

- Maximum directory hierarchy: 8 levels
- Maximum length of folder names/file names: 32 characters
- Maximum number of folders: 192 (including the root)
- Maximum number of files per disc: 255

● File names

The only files that can be recognized as MP3/WMA and played are those with the extension .mp3 or .wma.

● Multi-sessions

As the audio system is compatible with multi-sessions, it is possible to play discs that contain MP3 and WMA files. However, only the first session can be played.

● ID3 and WMA tags

ID3 tags can be added to MP3 files, making it possible to record the track title, artist name, etc.

The system is compatible with ID3 Ver. 1.0, 1.1, and Ver. 2.2, 2.3 ID3 tags. (The number of characters is based on ID3 Ver. 1.0 and 1.1.)

WMA tags can be added to WMA files, making it possible to record the track title and artist name in the same way as with ID3 tags.

● MP3 and WMA playback

When a disc containing MP3 or WMA files is inserted, all files on the disc are first checked. Once the file check is finished, the first MP3 or WMA file is played. To make the file check finish more quickly, we recommend you do not write in any files other than MP3 or WMA files or create any unnecessary folders.

If the discs contain a mixture of music data and MP3 or WMA format data, only music data can be played.

● Extensions

If the file extensions .mp3 and .wma are used for files other than MP3 and WMA files, they will be mistakenly recognized and played as MP3 and WMA files. This may result in large amounts of interference and damage to the speakers.

● Playback

- To play MP3 files with steady sound quality, we recommend a fixed bit rate of at least 128 kbps and a sampling frequency of 44.1 kHz.
- CD-R or CD-RW playback may not be possible in some instances, depending on the characteristics of the disc.
- There is a wide variety of freeware and other encoding software for MP3 and WMA files on the market, and depending on the status of the encoding and the file format, poor sound quality or noise at the start of playback may result. In some cases, playback may not be possible at all.
- When files other than MP3 or WMA files are recorded on a disc, it may take more time to recognize the disc. In some cases, playback may not be possible at all.
- Microsoft, Windows, and Windows Media are the registered trademarks of Microsoft Corporation in the U.S. and other countries.

NOTICE

■ **CDs and adapters that cannot be used (→P. 331)**

■ **CD player precautions (→P. 332)**

Operating an iPod*

Connecting an iPod enables you to enjoy music from the vehicle speakers.

■ Connecting an iPod

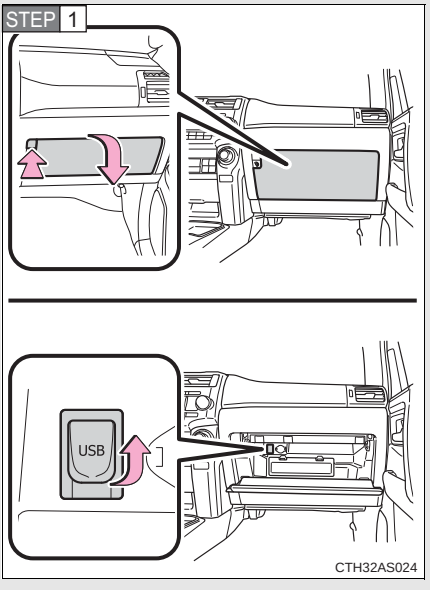

Open the glove box and connect an iPod using an iPod cable.

Turn on the power of the iPod if it is not turned on.

STEP 2 Press AUX .

*: If equipped

Control panel

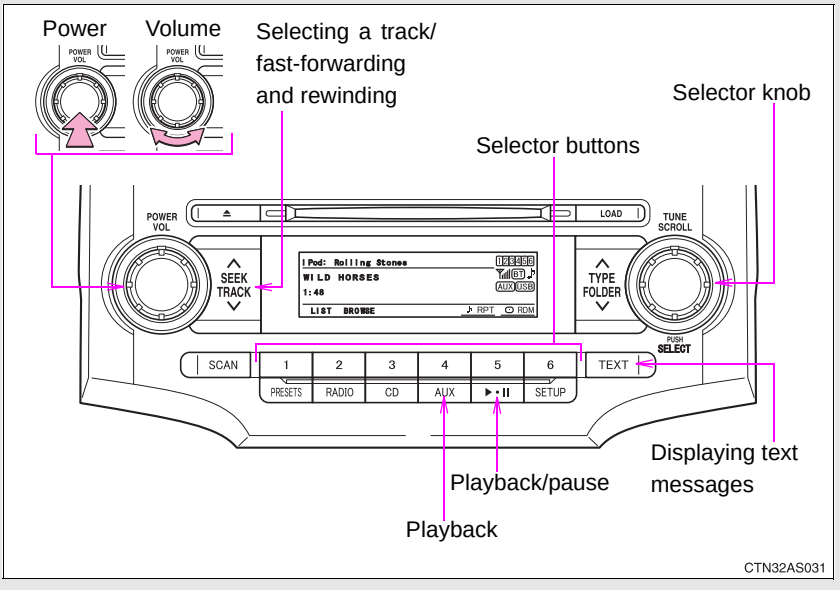

Selecting a play mode

STEP 1 Press [2] (BROWSE) to select iPod menu mode.

STEP 2 Press [2], [3], [4] or [5] as corresponds to the desired play mode.

Pressing [6] (MORE) to change to the second selection list.

■ Play mode list

Play mode	First selection	Second selection	Third selection	Fourth selection
PLIST	Playlist select	Songs select	-	-
ARTIST	Artist select	Albums select	Songs select	-
ALBUM	Albums select	Songs select	-	-
GENRE	Genre select	Artists select	Albums select	Songs select
SONGS	Songs select	-	-	-
PODCST	Albums select	Songs select	-	-
COMPSR	Composers select	Albums select	Songs select	-
BOOK	Songs select	-	-	-

Depending on the model, the name of your iPod may be displayed at the top of the list.

■ Selecting a list

STEP 1 Turn 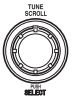 to display the first selection list.

STEP 2 Press 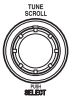 to select the desired item.

STEP 3 Repeat the same procedure to select the desired song name.

To return to the previous selection list, press 1 ( ).

Selecting songs from a song list

STEP 1 Press 1 (LIST).

The current playlist is displayed.

STEP 2 Turning to select the desired song.

Press returns the screen from list display to the previous screen.

Selecting songs

Turn 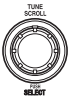

or press “∧” or “∨” on

to select the desired song.

Playing and pausing songs

Press

.

Fast-forwarding and rewinding songs

Press and hold “∧” or “∨” on

.

Shuffle playback

■ Playing songs from one playlist or album in random order

Press

(RDM).

To cancel, press the button twice.

■ Playing songs from all the playlists or albums in random order

Press

(RDM) twice.

To cancel, press the button again.

Repeat play

Press

(RPT).

To cancel, press the button again.

Even when the repeat play option has not been selected, playback will automatically continue from the first song in the current play list once the last song has ended.

Switching the display

Press TEXT .

Each time TEXT is pressed, the display changes in the following order:
Track title → Track title/Artist name → Track title/Album name → Track title/Elapsed time

---

■ About iPod

- Apple is not responsible for the operation of this device or its compliance with safety and regulatory standards.
- iPod is a trademark of Apple Inc., registered in the U.S. and other countries.

■ iPod functions

- When an iPod is connected and the audio source is changed to iPod mode, the iPod will resume play from the same point in which it was last used.
- Depending on the iPod that is connected to the system, certain functions may not be available. Disconnecting the device and reconnecting it once again may resolve some malfunctions.

■ iPod problems

To resolve most problems encountered when using your iPod, disconnect your iPod from the vehicle iPod connection and reset it.
For instructions on how to reset your iPod, refer to your iPod Owner's Manual.

■ Error messages

“iPod ERROR”:	This indicates a problem in the iPod, inside the USB box or the connection between them.
“NO SONGS”:	This indicates that there is no music data in the iPod.
“UPDATE YOUR iPod”:	This indicates that the version of the iPod is not compatible.

Compatible models

Model	Generation	Software version
iPod	5th generation	Ver. 1.2.0 or higher
iPod nano	1st generation	Ver. 1.3.0 or higher
	2nd generation	Ver. 1.1.2 or higher
	3rd generation	Ver. 1.0.0 or higher
iPod touch	1st generation	Ver. 1.1.0 or higher
iPod classic	1st generation	Ver. 1.0.0 or higher

Depending on differences between models or software version etc., some models listed above might be incompatible with this system.
iPod 4th generation and earlier models are not compatible with this system.
iPhone, iPod mini, iPod shuffle and iPod photo are not compatible with this system.

Items related to standards and limitations are as follows:

- Maximum number of lists in a device: 9999
- Maximum number of songs in a device: 65025
- Maximum number of songs per list: 65025

CAUTION

Caution while driving

Do not connect iPod or operate the controls.

NOTICE

To prevent damage to iPod

- Do not leave iPod in the vehicle. The temperature inside may become high, resulting in damage to the player.
- Do not push down on or apply unnecessary pressure to the iPod while it is connected as this may damage the iPod or its terminal.
- Do not insert foreign objects into the port as this may damage the iPod or its terminal.

Operating a USB memory*

Connecting a USB memory enables you to enjoy music from the vehicle speakers.

■ Connecting a USB memory

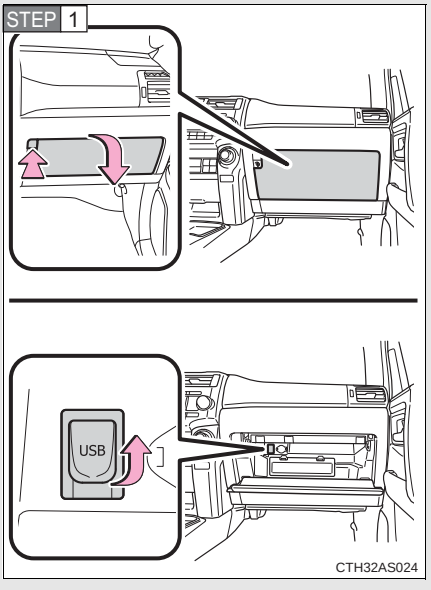

STEP 1 Open the glove box and connect a USB memory.

Turn on the power of the USB memory if it is not turned on.

STEP 2 Press AUX.

*: If equipped

Control panel

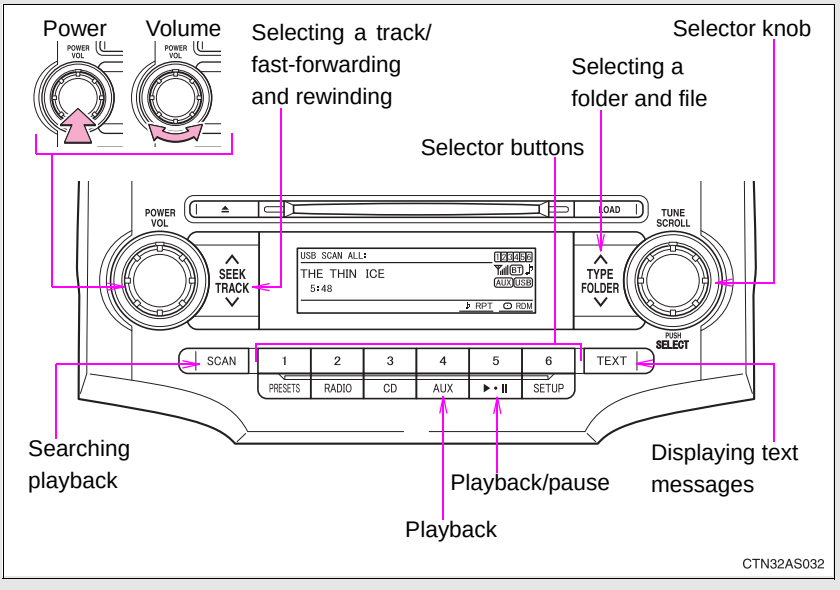

Selecting and scanning a folder

Selecting a folder

Press "∧" or "∨" on to select the desired folder.

Returning to the first file of the first folder

Press and hold "∨" on until you hear a beep.

Scanning the first file of all the folders

STEP 1 Press and hold until you hear a beep.

The first ten seconds of the first file in each folder will be played.

STEP 2 When the desired folder is reached, press again.

Selecting and scanning files

Selecting a file

Turn 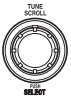

or press “∧” or “∨” on

to select the desired file.

Scanning the files in a folder

Press SCAN .

The first ten seconds of each file will be played.

To cancel, press SCAN again.

When the desired file is reached, press SCAN again.

Playing and pausing files

Press ▶·II .

Fast-forwarding and rewinding files

Press and hold “∧” or “∨” on

.

Random playback

Playing files from a folder in random order

Press 6 (RDM).

To cancel, press the button twice.

Playing all the files from a USB memory in random order

Press 6 (RDM) twice.

To cancel, press the button again.

Repeat play

Repeating a file

Press 5 (RPT).

To cancel, press the button twice.

Repeating all the files in a folder

Press 5 (RPT) twice.

To cancel, press the button again.

Switching the display

Press TEXT .

Each time TEXT is pressed, the display changes in the following order:
Track title → Track title/Artist name → Track title/Album name → Track title/Elapsed time

---

USB memory functions

Depending on the USB memory that is connected to the system, certain functions may not be available. Disconnecting the device and reconnecting it once again may resolve some malfunctions.

Error messages

“USB ERROR”: This indicates a problem either in the USB memory or inside the USB box or connection between them.

“NO SUPPORT”: This indicates that no MP3/WMA files are included in the USB memory.

USB memory

● Compatible device

USB memories that can be used for MP3 and WMA playback.

Depending on the type of USB device, playback may not be possible.

● Compatible device formats

The following device formats can be used:

- USB communication formats: USB2.0 FS (12 mbps)
- File formats: FAT16/32 (Windows)
- Correspondence class: Mass storage class
  MP3 and WMA files written in any format other than those listed above may not play correctly, and their file names and folder names may not be displayed correctly.

Items related to standards and limitations are as follows:

- Maximum directory hierarchy: 8 levels
- Maximum number of folder in device: 999 (including the root)
- Maximum number of files in device: 65025
- Maximum number of files per folder: 255

● MP3 and WMA files

MP3 (MPEG Audio LAYER 3) is a standard audio compression format.

Files can be compressed to approximately 1/10 of their original size using MP3 compression.

WMA (Windows Media® Audio) is a Microsoft audio compression format.

This format compresses audio data to a size smaller than that of the MP3 format.

There is a limit to the MP3 and WMA file standards that can be used and to the media/formats on which the files are recorded.

● MP3 file compatibility

- Compatible standards
  MP3 (MPEG1 AUDIO LAYERII, III, MPEG2 AUDIO LAYERII, III, MPEG2.5)
- Compatible sampling frequencies
  MPEG1 AUDIO LAYERII, III: 32, 44.1, 48 (kHz)
  MPEG2 AUDIO LAYERII, III: 16, 22.05, 24 (kHz)
  MPEG2.5: 8, 11.025, 12 (kHz)
- Compatible bit rates (compatible with VBR)
  MPEG1 AUDIO LAYERII, III: 32-320 (kbps)
  MPEG2 AUDIO LAYERII, III: 32-160 (kbps)
  MPEG2.5: 32-160 (kbps)
- Compatible channel modes: stereo, joint stereo, dual channel and monaural

● WMA file compatibility

- Compatible standards
  WMA Ver. 9
- Compatible sampling frequencies
  HIGH PROFILE 32, 44.1, 48 (kHz)
- Compatible bit rates
  HIGH PROFILE 32-320 (kbps, VBR)

● File names

The only files that can be recognized as MP3/WMA and played are those with the extension .mp3 or .wma.

● ID3 and WMA tags

ID3 tags can be added to MP3 files, making it possible to record the track title, artist name, etc.

The system is compatible with ID3 Ver. 1.0, 1.1, and Ver. 2.2, 2.3, 2.4 ID3 tags. (The number of characters is based on ID3 Ver. 1.0 and 1.1.)

WMA tags can be added to WMA files, making it possible to record the track title and artist name in the same way as with ID3 tags.

● MP3 and WMA playback

When a device containing MP3 or WMA files is plugged, all files in the USB memory device are first checked. Once the file check is finished, the first MP3 or WMA file is played. To make the file check finish more quickly, we recommend you do not write in any files other than MP3 or WMA files or create any unnecessary folders.

● Extensions

If the file extensions .mp3 and .wma are used for files other than MP3 and WMA files, they will be mistakenly recognized and played as MP3 and WMA files. This may result in large amounts of interference and damage to the speakers.

● Playback

- To play MP3 file with steady sound quality, we recommend a fixed bit rate of at least 128 kbps and a sampling frequency of 44.1 kHz.
- There is a wide variety of freeware and other encoding software for MP3 and WMA files on the market, and depending on the status of the encoding and the file format, poor sound quality or noise at the start of playback may result. In some cases, playback may not be possible at all.
- Microsoft, Windows, and Windows Media are the registered trademarks of Microsoft Corporation in the U.S.A. and other countries.

CAUTION

■ Caution while driving

Do not use a USB memory, or connect a USB memory.

NOTICE

■ To prevent damage to a USB memory

● Do not leave a USB memory in the vehicle. The temperature inside may become high, resulting in damage to the player.

● Do not push down on or apply unnecessary pressure to the USB memory while it is connected as this may damage the USB memory or its terminal.

● Do not insert foreign objects into the port as this may damage the USB memory or its terminal.

Type A

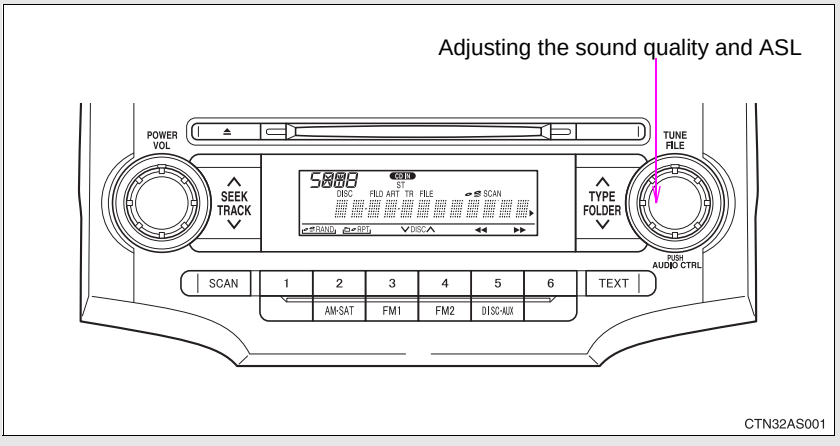

Type B and C

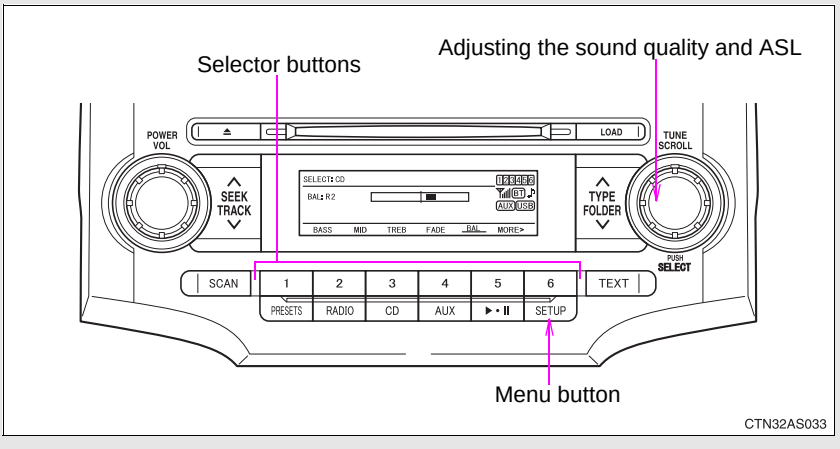

Using the audio control function

■ Changing sound quality modes

Type A

Pressing 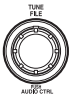

selects the mode to be changed in the following order:

“BAS”→“TRE”→“FAD”→“BAL”→“ASL”

Type B and C

STEP 1 Press SETUP .

STEP 2 Press 1 , 2 , 3 , 4 or 5 (type C only) as corresponds to the desired mode.
“BASS”, “MID” (type C only), “TREB”, “FADE”, or “BAL”

■ Adjusting sound quality

Turning

or

adjusts the level.

Type A

Mode displayed	Sound quality mode	Level	Turn to the left	Turn to the right
BAS	Bass*	-5 to 5	Low	High
TRE	Treble*	-5 to 5		
FAD	Front/rear volume balance	F7 to R7	Shifts to rear	Shifts to front
BAL	Left/right volume balance	L7 to R7	Shifts to left	Shifts to right

*: The sound quality level is adjusted individually in each radio mode or CD mode.

Type B and C

Mode displayed	Sound quality mode	Level	Turn to the left	Turn to the right
BASS	Bass*	-5 to 5	Low	High
MID	Mid-range* (type C only)	-5 to 5		
TREB	Treble*	-5 to 5		
FADE	Front/rear volume balance	F7 to R7	Shifts to rear	Shifts to front
BAL	Left/right volume balance	L7 to R7	Shifts to left	Shifts to right

*: The sound quality level is adjusted individually in each audio mode.

■ Adjusting the Automatic Sound Levelizer (ASL)

Type A

When “ASL” is selected, turning

to the right changes the “ASL” level in the order of “LOW”, “MID” and “HIGH”.

Turning

to the left turns “ASL” off.

ASL automatically adjusts the volume and tone quality according to vehicle speed.

Type B and C

STEP 1 Press SETUP .

STEP 2 Press 6 (MORE).

STEP 3 Press 5 (ASL).

STEP 4 Press 2 , 3 , 4 (type B only) or 5 (type B only) as corresponds to the desired mode.

Type B: “LOW”, “MID”, “HIGH”, or “OFF”

Type C: “ON” or “OFF”

ASL automatically adjusts the volume and tone quality according to vehicle speed.

■ Setting the number of preset pages (type B and C)

The number of preset pages desired can be set from 1 to 6. The initial setting is 6 pages.

STEP 1 Press SETUP .

STEP 2 Press 6 (MORE).

STEP 3 Press 2 (PRESET).

STEP 4 Press 1 , 2 , 3 , 4 , 5 or 6 as corresponds to the desired number of preset pages.

■ Language settings (type B and C)

→P. 315

Party mode switch

You can switch the sounds quality types by pressing the switch.

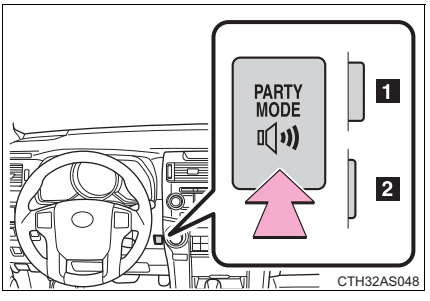

1 Base mode

2 Party mode

In party mode, the sound volume from the speakers on the back door is bigger than in base mode. (The output from the speakers on the rear doors will be transferred to the back door speakers.)

Trademark owned by SRS Labs, Inc. (type B and C)

The audio systems utilize SRS FOCUS™ and SRS TruBass® audio enhancement technologies, under license from SRS Labs, Inc., in all modes except AM radio mode.

FOCUS, TruBass, SRS and symbols are trademarks of SRS Labs, Inc.
FOCUS and TruBass technologies are incorporated under license from SRS Labs, Inc.

Using the AUX port

This port can be used to connect a portable audio device and listen to it through the vehicle's speakers.

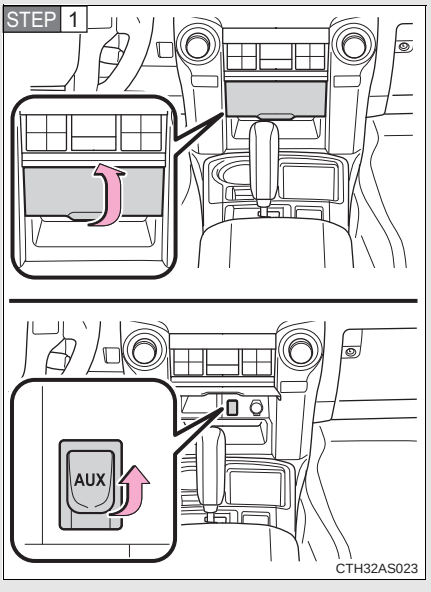

Open the cover and connect the portable audio device.

STEP 2 Press DISC·AUX or AUX .

■ **Operating portable audio devices connected to the audio system**

The volume can be adjusted using the vehicle's audio controls. All the other adjustments must be made on the portable audio device itself.

■ **When using a portable audio device connected to the power outlet**

Noise may occur during playback. Use the power source of the portable audio device.

Using the steering wheel audio switches*

Some audio features can be controlled using the switches on the steering wheel.

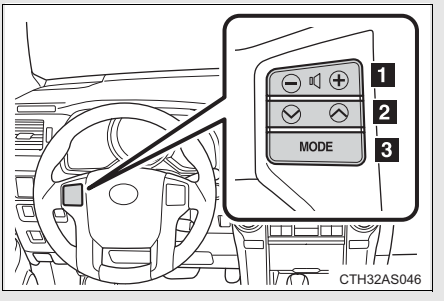

1 Increases/decreases volume

2 Radio mode: Selects radio stations

CD mode: Selects tracks, files (MP3 and WMA) and discs (type C only)

iPod mode:

Selects a song

USB memory mode:

Selects a file and folder

Bluetooth® audio mode:

Selects a track and album

3 Turns the power on, selects an audio source

*: If equipped

Turning the power on

Press MODE when the audio system is turned off.

The audio system can be turned off by holding the switch down until you hear a beep.

Changing the audio source

Press MODE when the audio system is turned on. The audio source changes as follows each time the switch is pressed.
If no discs are inserted in the player, that mode will be skipped.

FM→SAT→CD (type B only)→CD changer (type C only)→Bluetooth® Audio→AUX→USB/iPod→AM

Adjusting the volume

Press “+” on ⊖ 🔈 ⊕ to increase the volume and “-” to decrease the volume.

Press and hold the switch to continue increasing or decreasing the volume.

Selecting a radio station

STEP 1 Press MODE to select radio mode.

STEP 2 Press “∨” or “∧” on ⊘ ⊘ to select a radio station.

To scan for receivable stations, press and hold “∨” or “∧” on ⊘ ⊘ until you hear a beep.

Selecting a track/file or song

STEP 1 Press MODE to select CD, iPod, USB memory or Bluetooth® audio mode.

STEP 2 Press “∨” or “∧” on to select the desired track/file or song.

Selecting a folder or album

STEP 1 Press MODE to select the CD, USB memory or Bluetooth® audio mode.

STEP 2 Press and hold “∨” or “∧” on until you hear a beep.

Selecting a disc in the CD player (type C only)

STEP 1 Press MODE to select CD mode.

STEP 2 Press and hold “∨” or “∧” on until you hear a beep.

CAUTION

■To reduce the risk of an accident

Exercise care when operating the audio switches on the steering wheel.

Bluetooth® audio system*

The Bluetooth® audio system enables you to enjoy music played on a portable digital audio player (portable player) from the vehicle speakers via wireless communication.

This audio system supports Bluetooth®, a wireless data system capable of playing portable audio music without cables. If your portable player does not support Bluetooth®, the Bluetooth® audio system will not function.

Owners of models equipped with a navigation system should refer to the “Navigation System Owner's Manual”.

Title	Page
Using the Bluetooth® audio system	P. 367
Operating a Bluetooth® enabled portable player	P. 372
Setting up a Bluetooth® enabled portable player	P. 374
Bluetooth® audio system setup	P. 379

■Conditions under which the system will not operate

- If using a portable player that does not support Bluetooth®
- If the portable player is switched off
- If the portable player is not connected
- If the portable player’s battery is low
- If the portable player is behind the seat or in the glove box or console box
- If metal is covering or touching the portable player

*: If equipped

■When transferring ownership of the vehicle

Be sure to initialize the system to prevent personal data from being improperly accessed. (→P. 403)

■About Bluetooth®

Bluetooth is a registered trademark of Bluetooth SIG. Inc.

■Compatible models

- Bluetooth® specifications:
  Ver. 1.2
- Following Profiles:
  - A2DP (Advanced Audio Distribution Profile) Ver. 1.0
  - AVRCP (Audio/Video Remote Control Profile) Ver. 1.0 or higher (Ver. 1.3 or higher recommended)

Portable players must correspond to the above specifications in order to be connected to the Bluetooth® audio system. However, please note that some functions may be limited depending on the type of portable player.

■Certification for the Bluetooth® audio system

FCC ID: AJDK025
IC ID: 775E-K025
MADE IN JAPAN

This device complies with Part 15 of the FCC Rules and RSS-Gen of IC Rules. Operation is subject to the following two conditions: (1) this device may not cause harmful interference, and (2) this device must accept any interference received, including interference that may cause undesired operation.

CAUTION

FCC WARNING

Changes or modifications not expressly approved by the party responsible for compliance could void the user's authority to operate the equipment.

Radio Frequency Radiation Exposure. This equipment complies with FCC/IC radiation exposure limits set forth for uncontrolled equipment and meets the FCC radio frequency (RF) Exposure Guidelines in Supplement C to OET65 and RSS-102 of the IC radio frequency (RF) Exposure rules. This equipment has very low levels of RF energy that it deemed to comply without maximum permissive exposure evaluation (MPE). But it is desirable that it should be installed and operated with at least 7.9 in. (20 cm) and more between the radiator and person's body (excluding extremities: hands, wrists, feet and ankles).

This transmitter must not be co-located or operated in conjunction with any other antenna or transmitter.

Caution while driving

Do not connect portable players or operate the controls.

NOTICE

To prevent damage to portable players

Do not leave portable players in the vehicle. The temperature inside the vehicle may become high, resulting in damage to the player.

Using the Bluetooth® audio system

Audio unit

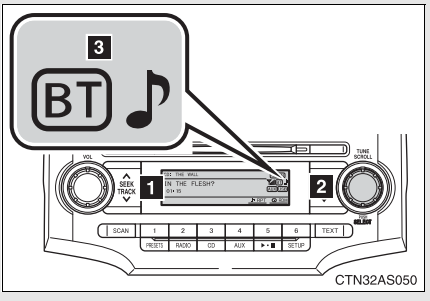

CTN32AS050

1 Display
Track title, Artist name, Album name, Elapsed time, “Streaming Audio”, etc. is displayed.

2 Selects items such as menu and number
Turn: Selects an item
Press: Inputs the selected item

3 Bluetooth-Audio connection condition

If “BT” is not displayed, the Bluetooth® audio system cannot be used.

Microphone

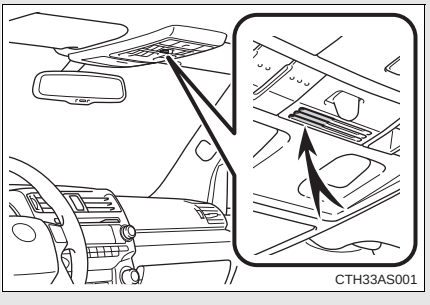
CTH33AS001

Operating the system using voice commands

By following voice guidance instructions output from the speaker, voice commands enable to the operation of the Bluetooth® audio system without the need to check the display or operate

.

■ Operation procedure when using voice commands

Press the talk switch and follow voice guidance instructions.

■ Auxiliary commands when using voice commands

The following auxiliary commands can be used when operating the system using a voice command:

“Cancel”: Exits the Bluetooth® audio setup
“Repeat”: Repeats the previous voice guidance instruction
“Go back”: Returns to the previous procedure
“Help”: Reads aloud the function summary if a help comment is registered for the selected function

Using the Bluetooth® audio system for the first time

Before using the Bluetooth® audio system, it is necessary to register a Bluetooth® enabled portable player in the system. Follow the procedure below to register (pair) a portable player:

STEP 1 Press and hold AUX until “BT AUDIO” is displayed.

STEP 2 Press 1 (SETUP).

The introductory guidance and portable player name registration instructions are heard.

STEP 3 Select “Pair Audio Players (Pair audio player)” using a voice command or

.

STEP 4 Register a portable player name by either of the following methods:

a. Select “Record Name” using

, and say the name to be registered.

b. Press the talk switch and say the name to be registered.

A voice guidance instruction to confirm the input is heard.

STEP 5 Select “Confirm” using a voice command or

.

A passkey is displayed and heard, and a voice guidance instruction for inputting the passkey into the portable player is heard.

STEP 6 Input the passkey into the portable player.

Refer to the manual that comes with the portable player for the operation of the portable player.

Guidance for registration completion is heard.

If the portable player has a Bluetooth® phone, the phone can be registered at the same time. (→P. 386)

Menu list of the Bluetooth® audio system

First menu	Second menu	Third menu	Operation detail
Setup (Setup)	BT Audio Setup (BT audio setup)	Pair Audio Players (Pair audio player)	Registering a portable player
		Select Audio Player	Selecting a portable player to be used
		Change Name	Changing the registered name of a portable player
		List Audio Players	Listing the registered portable players
		Set Passkey	Changing the passkey
		Delete Audio Player	Deleting a registered portable player
	System Setup	Guidance Volume	Setting voice guidance volume
		Device Name	Displaying the Bluetooth® device address and name
		Reset Setting	Initializing the system

“BT Audio Setup” can be canceled by pressing the on-hook switch or saying the voice command, “Cancel”.

■ **When using a voice command**

For numbers, say a combination of single digits from zero to nine.

Say the command correctly and clearly.

■ **Situations that the system may not recognize your voice**

- When driving on rough roads
- When driving at high speeds
- When air is blowing out of the vents onto the microphone
- When the air conditioning fan emits a loud noise

■ **Operations that cannot be performed while driving**

- Operating the system with

- Registering a portable player to the system

■ **Changing the passkey**

→P. 377

Operating a Bluetooth® enabled portable player

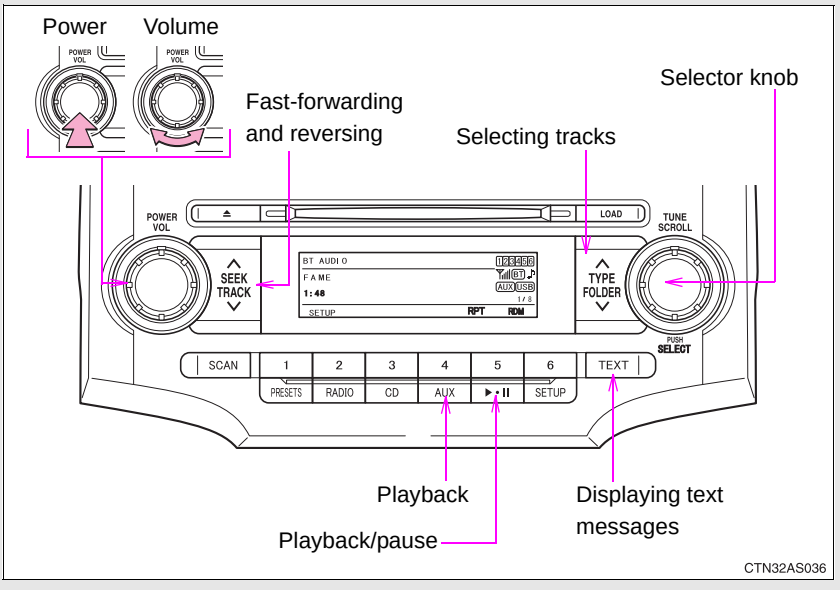

Selecting an album

Press “∨” or “∧” on .

Selecting tracks

Press “∧” or “∨” on .

Playing and pausing tracks

Press .

Fast-forwarding and reversing tracks

Press and hold "∧" or "∨" on SEEK TRACK .

Switching the display

Press TEXT .

Each time TEXT is pressed, the display changes in the following order:
Track title → Track title/Artist name → Track title/Album name → Track title/Elapsed time

Using the steering wheel audio switches

→P. 361

■Bluetooth® audio system functions

Depending on the portable player that is connected to the system, certain functions may not be available.

Setting up a Bluetooth® enabled portable player

Registering a portable player in the Bluetooth® audio system allows the system to function. The following functions can be used for registered portable players:

■ Functions and operation procedures

STEP 1 Press and hold AUX until “BT AUDIO” is displayed.

STEP 2 Press 1 (SETUP).

STEP 3 Select one of the following functions using a voice command or

.

- Registering a portable player
  “Pair Audio Players (Pair audio player)”
- Selecting a portable player to be used
  “Select Audio Player”
- Changing the registered name of a portable player
  “Change Name”
- Listing the registered portable players
  “List Audio Players”
- Changing the passkey
  “Set Passkey”
- Deleting a registered portable player
  “Delete Audio Player”

Registering a portable player

Select “Pair Audio Players (Pair audio player)” using a voice command or

, and perform the procedure for registering a portable player. (→P. 369)

Selecting a portable player to be used

STEP 1 Select “Select Audio Player” using a voice command or

.

STEP 2 Select the portable player to be used by either of the following methods, and select “Confirm” using a voice command or

:

a. Press the talk switch and say the name of the desired portable player.

b. Press the talk switch and say “List audio players”. When the name of the desired portable player is read aloud, press the talk switch.

STEP 3 Press the talk switch and say “From car” or “From audio”, and select “Confirm” using a voice command or

.

Vehicles with smart key system: If “From car” is selected, the portable player will be automatically connected whenever the “ENGINE START STOP” switch is in either ACCESSORY or IGNITION ON mode.

Vehicles without smart key system: If “From car” is selected, the portable player will be automatically connected whenever the engine switch is in either the “ACC” or “ON” position.

Changing the registered name of a portable player

STEP 1 Select “Change Name” using a voice command or 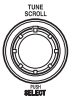

.

STEP 2 Select the name of the portable player to be changed by either of the following methods, and select “Confirm” using a voice command or

:

a. Press the talk switch and say the name of desired portable player.

b. Press the talk switch and say “List audio players”. When the name of the desired portable player is read aloud, press the talk switch.

STEP 3 Press the talk switch or select “Record Name” using

, and say the new name.

STEP 4 Select “Confirm” using a voice command or

.

Listing the registered portable players

Select “List Audio Players” using a voice command or 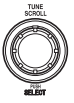

. The list of registered portable players will be read aloud.
When listing is complete, the system returns to “BT Audio Setup”.

Pressing the talk switch while the name of a portable player is being read aloud selects the portable player, and the following functions will become available:

- Selecting a portable player: “Select Audio Player”
- Changing a registered name: “Change Name”
- Deleting a portable player: “Delete Audio Player”

Changing the passkey

STEP 1 Select “Set Passkey” using a voice command or

.

STEP 2 Press the talk switch, say a 4 to 8-digit number, and select “Confirm” using a voice command or

.

STEP 3 When the entire number to be registered as a passkey has been input, press

again.

Deleting a registered portable player

STEP 1 Select “Delete Audio Player” using a voice command or

.

STEP 2 Select the portable player to be deleted by either of the following methods and select “Confirm” using a voice command or

:

a. Press the talk switch and say the name of the desired portable player.

b. Press the talk switch and say “List audio players”. When the name of the desired portable player is read aloud, press the talk switch.

If the portable player to be deleted is paired as a Bluetooth® phone, the registration of the mobile phone can be deleted at the same time. A voice guidance instruction to delete a mobile phone is heard.

STEP 3 Select “Confirm” using a voice command or

.

■ The number of portable players that can be registered

Up to 2 portable players can be registered in the system.

Bluetooth® audio system setup

■ **System setup items and operation procedures**

→P. 401

Hands-free phone system (for cellular phone) features*

This system supports Bluetooth®, which allows you to make or receive calls without using cables to connect a cellular phone and the system, and without operating the cellular phone.
Owners of models equipped with a navigation system should refer to the "Navigation System Owner's Manual".

■ Hands-free system quick guide

STEP 1 Setting a cellular phone. (→P. 384)

STEP 2 Adding an entry to the phonebook (Up to 20 names can be stored). (→P. 405)

STEP 3 Dialing by inputting a name. (→P. 393)

*: If equipped

Title	Page
Using the hands-free phone system ■Operating the system using a voice command ■Using the hands-free phone system for the first time ■Menu list of the hands-free phone system	P. 384
Making a phone call ■Dialing by inputting a number ■Dialing by inputting a name ■Speed dialing ■When receiving a phone call ■Transferring a call ■Using the call history memory	P. 392
Setting a cellular phone ■Registering a cellular phone ■Selecting the cellular phone to be used ■Changing a registered name ■Listing the registered cellular phone ■Deleting a cellular phone ■Changing the passkey ■Turning the hands-free phone automatic connection on/off	P. 396
Security and system setup ■Setting or changing the PIN ■Locking or unlocking the phone book ■Setting voice guidance volume ■Initialization	P. 401
Using the phone book ■Adding a new phone number ■Setting speed dials ■Changing a registered name ■Deleting registered data ■Deleting speed dials ■Listing the registered data	P. 405

■ **Conditions under which the system will not operate**

- If using a cellular phone that does not support Bluetooth®
- If the cellular phone is switched off
- If you are outside service range
- If the cellular phone is not connected
- If the cellular phone's battery is low
- If the cellular phone is behind the seat or in the glove box or console box
- If metal is covering or touching the cellular phone

■ **When transferring ownership of the vehicle**

Be sure to initialize the system to prevent personal data from being improperly accessed.

■ **Required profiles for the cellular phone**

- HFP (Hands Free Profile) Ver. 1.0
- OPP (Object Push Profile) Ver. 1.1

■ **About Bluetooth®**

Bluetooth is a registered trademark of Bluetooth SIG. Inc.

■ **Certification for the hands-free phone system**

FCC ID: AJDK025
IC ID: 775E-K025
MADE IN JAPAN

This device complies with Part 15 of the FCC Rules and RSS-Gen of IC Rules. Operation is subject to the following two conditions: (1) this device may not cause harmful interference, and (2) this device must accept any interference received, including interference that may cause undesired operation.

CAUTION

FCC WARNING

Changes or modifications not expressly approved by the party responsible for compliance could void the user's authority to operate the equipment.

Radio Frequency Radiation Exposure. This equipment complies with FCC/IC radiation exposure limits set forth for uncontrolled equipment and meets the FCC radio frequency (RF) Exposure Guidelines in Supplement C to OET65 and RSS-102 of the IC radio frequency (RF) Exposure rules. This equipment has very low levels of RF energy that it deemed to comply without maximum permissive exposure evaluation (MPE). But it is desirable that it should be installed and operated with at least 7.9 in. (20 cm) and more between the radiator and person’s body (excluding extremities: hands, wrists, feet and ankles).

This transmitter must not be co-located or operated in conjunction with any other antenna or transmitter.

Caution while driving

Do not use a cellular phone, or connect the Bluetooth® phone.

NOTICE

To prevent damage to a cellular phone

Do not leave a cellular phone in the vehicle. The temperature inside may become high resulting in damage to the phone.

Using the hands-free phone system (for cellular phone)

■ Audio unit

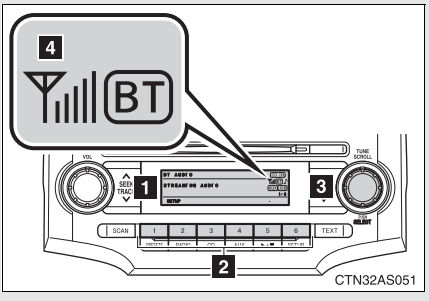

1 Display
A message, name, phone number, etc. is displayed.

Lower-case characters and special characters, such as an umlaut, cannot be displayed.

2 Selects speed dials

3 Selects items such as menu or number
Turn: Selects an item
Press: Inputs the selected item

4 Bluetooth® connection condition and reception level

If “BT” is not displayed, the hands-free phone system cannot be used.

Steering wheel switches

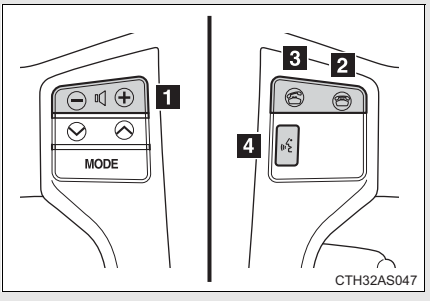

1 Volume

The voice guidance volume cannot be adjusted using this button.

2 On-hook switch

Turns the hands-free system off/ends a call/refuses a call

3 Off-hook switch

Turns the hands-free system on/starts a call

4 Talk switch

Turns the voice command system on (press)/turns the voice command system off (press and hold)

Microphone

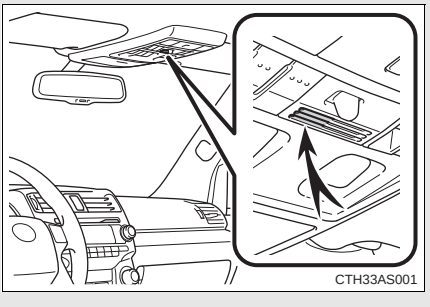

Operating the system using a voice command

By following voice guidance instructions output from the speaker, voice commands enable the operation of the hands-free phone system without the need to check the display or operate 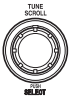

.

■ Operation procedure when using a voice command

Press the talk switch and follow voice guidance instructions.

■ Auxiliary commands when using a voice command

The following auxiliary commands can be used when operating the system using a voice command:

“Cancel”: Exits the hands-free phone system
“Repeat”: Repeats the previous voice guidance instruction
“Go back”: Returns to the previous procedure
“Help”: Reads aloud the function summary if a help comment is registered for the selected function

Using the hands-free phone system for the first time

Before using the hands-free phone system, it is necessary to register a cellular phone in the system. The phone registration mode will be entered automatically when starting the system with no cellular phone registered. Follow the procedure below to register a cellular phone:

STEP 1 Press the off-hook switch or the talk switch.

The introductory guidance and phone name registration instructions are heard.

STEP 2 Select “Pair Phone” using a voice command or 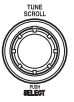 .

STEP 3 Register a phone name by either of the following methods.

a. Select “Record Name” using 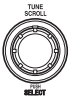 , and say a name to be registered.

b. Press the talk switch and say a name to be registered.

A voice guidance instruction to confirm the input is heard.

STEP 4 Select “Confirm” using a voice command or 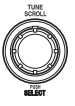 .

Registration to the hands-free phone system only

STEP 5 Select “Phone Only” using a voice command or .

Registration to the hands-free phone system and Bluetooth® audio system at the same time

STEP 5 Select “Int. Audio (Internal audio)” using a voice command or .

STEP 6 Select “Confirm” using a voice command or .

A passkey is displayed and heard, and a voice guidance instruction for inputting the passkey into the cellular phone is heard.

STEP 7 Input the passkey into the cellular phone.

Refer to the manual that comes with the cellular phone for the operation of the phone.

Guidance for registration completion is heard.

Menu list of the hands-free phone system

Normal operation

First menu	Second menu	Third menu	Operation detail
CallBack (Call back)	-	-	Dialing a number stored in the incoming call history memory
Redial	-	-	Dialing a number stored in the outgoing call history memory
Dial by Number	-	-	Dialing by inputting a number
Dial by Name (Dial by name)	-	-	Dialing by inputting a name registered in the phone book
Phonebook	Add Entry	-	Adding a new number
	Change Name	-	Changing a name in the phone book
	Delete Entry	-	Deleting the phone book data
	Delete Speed Dial	-	Deleting a registered speed dial
	List Names	-	Listing the phone book data
	Speed Dial (Set speed dial)	-	Registering a speed dial

First menu	Second menu	Third menu	Operation detail
Setup (Setup)	Security	Set PIN	Setting a PIN code
		Phonebook Lock (Phone book lock)	Locking the phone book
		Phonebook Unlock (Phone book unlock)	Unlocking the phone book
	Phone Setup	Pair Phone	Registering the cellular phone to be used
		Change Phone Name (Change name)	Changing a registered name of a cellular phone
		Delete Phone	Deleting a registered cellular phone
		List Phones	Listing the registered cellular phones
		Select Phone	Selecting a cellular phone to be used
		Set Passkey	Changing the passkey
		Handsfree Power	Setting a Hands-free power on/off
	System Setup	Guidance Volume	Setting voice guidance volume
		Device Name	Displaying a device information
		Reset Setting	Initialization

Using a short cut key

First menu	Second menu	Operation detail
Dial “XXX (name)”	-	Dialing a number registered in the phone book
Dial “XXX (number)”	-	Dialing the input numbers
Phone book add entry	-	Adding a new number
Phone book change name	-	Changing the name of a phone number in the phone book
Phone book delete entry	-	Deleting phone book data
Phone book set speed dial	-	Registering a speed dial
Phone book delete speed dial	-	Deleting a speed dial
Phone book List names	-	Listing the phone book data

■ **Automatic volume adjustment**

When vehicle speed reaches 50 mph (80 km/h) or more, the volume automatically increases. The volume returns to the previous volume setting when vehicle speed drops to 43 mph (70 km/h) or less.

■ **When using a voice command**

For numbers, say a combination of single digits from zero to nine, # (pound), ∗ (star), and + (plus).

Say a command correctly and clearly.

■ **Situations that the system may not recognize your voice**

- When driving on a rough road
- When driving at high speeds
- When air is blowing out of the vents onto the microphone
- When the air conditioning fan emits a loud noise

■ **Operations that cannot be performed while driving**

- Operating the system with

- Registering a cellular phone to the system

■ **Changing the passkey**

→P. 399

Making a phone call

■ **Making a phone call**

- Dialing by inputting a number
  “Dial by Number”
- Dialing by inputting a name
  “Dial by Name (Dial by name)”
- Speed dialing
- Dialing a number stored in the outgoing history memory
  “Redial”
- Dialing a number stored in the incoming history memory
  “CallBack (Callback)”

■ **Receiving a phone call**

- Answering a phone call
- Refusing a phone call

■ **Transferring a phone call**

■ **Using the call history memory**

- Dialing
- Storing data in the phone book
- Deleting

Dialing by inputting a number

STEP 1 Press the talk switch and say “Dial by number”.

STEP 2 Press the talk switch and say the phone number.

STEP 3 Dial by one of the following methods:

a. Press the off-hook switch.

b. Press the talk switch and say “Dial”.

c. Select “Dial” using

.

Dialing by inputting a name

STEP 1 Press the talk switch and say “Dial by name”.

STEP 2 Select a registered name to be input by either of the following methods:

a. Press the talk switch and say a registered name.

b. Press the talk switch and say “List names”. Press the talk switch while the desired name is being read aloud.

STEP 3 Dial by one of the following methods:

a. Press the off-hook switch.

b. Press the talk switch and say “Dial”.

c. Select “Dial” using

.

Speed dialing

STEP 1 Press the off-hook switch.

STEP 2 Press the preset button to which the desired number is registered.

STEP 3 Press the off-hook switch.

When receiving a phone call

■ Answering a phone call

Press the off-hook switch.

■ Refusing a phone call

Press the on-hook switch.

Transferring a phone call

A call can be transferred between the cellular phone and system while dialing, receiving a call, or during a call. Use one of the following methods:

a. Operate the cellular phone.

Refer to the manual that comes with the cellular phone for the operation of the phone.

b. Press the off-hook switch*1.

c. Press the talk switch and say “Call transfer”*2.

*1: This operation can be performed only when transferring a call from the cellular phone to the system during a call.

*2: While the vehicle is in motion, a call cannot be transferred from the system to the cellular phone. Also, this operation is invalid while dialing or receiving a call.

Using the call history memory

Follow the procedure below to use a number stored in the call history memory:

STEP 1 Press the talk switch and say “Redial” (when using a number stored in the outgoing call history memory) or “Callback” (when using a number stored in the incoming call history memory).

STEP 2 Select the number by either of the following methods:

a. Say “Previous” or “Go back” until the desired number is displayed.

b. Select the desired number using

.

The following operations can be performed:

Dialing: Press the off-hook switch or select “Dial” using a voice command or

.

Storing the number in the phone book: Select “Store” using a voice command or

.

Deleting: Select “Delete” using a voice command or

.

■ **Call history**

Up to 5 numbers can be stored in each of the outgoing and incoming call history memories.

■ **When talking on the phone**

- Do not talk at the same time as the other party.
- Keep the volume of the incoming voice down. Otherwise, voice echo will increase.

Setting a cellular phone

Registering a cellular phone in the hands-free phone system allows the system to function. The following functions can be used for registered cellular phones:

■ Functions and operation procedures

To enter the menu for each function, follow the steps below using a voice command or

:

- Registering a cellular phone
  1. “Setup (Setup)” → 2. “Phone Setup” → 3. “Pair Phone”
- Selecting the cellular phone to be used
  1. “Setup (Setup)” → 2. “Phone Setup” → 3. “Select Phone”
- Changing a registered name
  1. “Setup (Setup)” → 2. “Phone Setup” → 3. “Change Phone Name (Change name)”
- Listing the registered cellular phones
  1. “Setup (Setup)” → 2. “Phone Setup” → 3. “List Phones”
- Deleting a cellular phone
  1. “Setup (Setup)” → 2. “Phone Setup” → 3. “Delete Phone”
- Changing the passkey
  1. “Setup (Setup)” → 2. “Phone Setup” → 3. “Set Passkey”
- Turning the hands-free phone automatic connection on/off
  1. “Setup (Setup)” → 2. “Phone Setup” → 3. “Handsfree Power”

Registering a cellular phone

Select “Pair Phone” using a voice command or

, and perform the procedure for registering a cellular phone. (→P. 386)

Selecting the cellular phone to be used

STEP 1 Select “Select Phone” using a voice command or 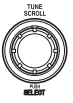

.

Pattern A

STEP 2 Select the cellular phone to be used by either of the following methods, and select “Confirm” using a voice command or 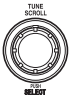

:

a. Press the talk switch and say the desired phone name.

b. Press the talk switch and say “List phones”. While the name of the desired cellular phone is being read aloud, press the talk switch.

Pattern B

STEP 2 Select the cellular phone to be used using

.

Changing a registered name

STEP 1 Select “Change Phone Name (Change name)” using a voice command or

.

STEP 2 Select the name of the cellular phone to be changed by either of the following methods:

a. Press the talk switch and say the desired phone name, and select “Confirm” using a voice command or

.

b. Press the talk switch and say “List phones”. While the desired phone name is being read aloud, press the talk switch.

c. Select the desired phone name using

.

STEP 3 Press the talk switch or select “Record Name” using

, and say a new name.

STEP 4 Select “Confirm” using a voice command or

.

Listing the registered cellular phones

Selecting “List Phones” using a voice command or

causes the list of registered cellular phones to be read aloud.
When listing is complete, the system returns to “Phone Setup”.

Pressing the talk switch while the name of a cellular phone is being read selects the cellular phone, and the following functions will be available:

- Selecting a cellular phone: “Select Phone”
- Changing a registered name: “Change Name”
- Deleting a cellular phone: “Delete Phone”

Deleting a cellular phone

STEP 1 Select “Delete Phone” using a voice command or 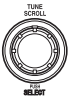

.

STEP 2 Select the cellular phone to be deleted by either of the following methods and select “Confirm” using a voice command or

:

a. Press the talk switch and say the name of the desired cellular phone.

b. Press the talk switch and say “List phones”. While the name of the desired cellular phone is being read aloud, press the talk switch.

Changing the passkey

STEP 1 Select “Set Passkey” using a voice command or

.

STEP 2 Press the talk switch, say a 4 to 8-digit number, and select “Confirm” using a voice command or

.

The number should be input 1 digit at a time.

STEP 3 When the entire number to be registered as a passkey has been input, press

again.

Turning the hands-free phone automatic connection on/off

■ Turning off the automatic connection

STEP 1 Select “Handsfree Power” using a voice command or 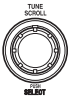

.

STEP 2 Select “Turn off” using a voice command or

.

■ Turning on the automatic connection

STEP 1 Select “Handsfree Power” using a voice command or 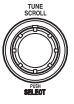

.

STEP 2 Select “Turn on” using a voice command or

.

■ The number of cellular phones that can be registered

Up to 6 cellular phones can be registered in the system.

Security and system setup

To enter the menu of each setting, follow the steps below:

■ Security setting items and operation procedure

● Setting or changing the PIN (Personal Identification Number)
1. “Setup (Setup)” → 2. “Security” → 3. “Set PIN”

● Locking the phone book
1. “Setup (Setup)” → 2. “Security” → 3. “Phonebook Lock (Phone book lock)”

● Unlocking the phone book
1. “Setup (Setup)” → 2. “Security” → 3. “Phonebook Unlock (Phone book unlock)”

■ System setup items and operation procedure

● Setting voice guidance volume
1. “Setup (Setup)” → 2. “System Setup” → 3. “Guidance Volume”

● Initialization
1. “Setup (Setup)” → 2. “System Setup” → 3. “Reset Settings”

can only be used for system setup operation.

Setting or changing the PIN

■ Setting a PIN

STEP 1 Select “Set PIN” using a voice command or

.

STEP 2 Enter a PIN using a voice command or 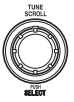

.

When using 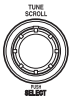

, input the code 1 digit at a time.

■ **Changing the PIN**

STEP 1 Select “Set PIN” using a voice command or

.

STEP 2 Enter the registered PIN using a voice command or

.

STEP 3 Enter a new PIN using a voice command or

.

When using

, input the code 1 digit at a time.

Locking or unlocking the phone book

STEP 1 Select “Phonebook Lock (Phone book lock)” or “Phonebook Unlock (Phone book unlock)” using a voice command or

.

STEP 2 Input the PIN by either of the following methods and select “Confirm” using a voice command or

:

a. Press the talk switch and say the registered PIN.

b. Input a new PIN using

.

Setting voice guidance volume

STEP 1 Select “Guidance Volume” using 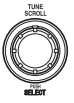

.

STEP 2 Change the voice guidance volume.

To decrease the volume: Turn 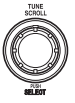

counterclockwise.

To increase the volume: Turn

clockwise.

Initialization

STEP 1 Select “Reset Settings” and then “Confirm” using

.

STEP 2 Select “Confirm” using

.

Initialization

- The following data in the system can be initialized:
  - Phone book
  - Outgoing and incoming call history
  - Speed dials
  - Registered cellular phone data
  - Security code
- Once the initialization has been completed, the data cannot be restored to its original state.

When the phone book is locked

The following functions cannot be used:

- Dialing by inputting a name
- Speed dialing
- Dialing a number stored in the call history memory
- Using the phone book

Using the phone book

To enter the menu of each setting, follow the steps below:

- Adding a new phone number
  1. “Phonebook” → 2. “Add Entry”
- Setting speed dial
  1. “Phonebook” → 2. “Speed Dial (Set speed dial)”
- Changing a registered name
  1. “Phonebook” → 2. “Change Name”
- Deleting registered data
  1. “Phonebook” → 2. “Delete Entry”
- Deleting speed dial
  1. “Phonebook” → 2. “Delete Speed Dial”
- Listing the registered data
  1. “Phonebook” → 2. “List Names”

Adding a new phone number

The following methods can be used to add a new phone number:

- Inputting a phone number using a voice command
- Transferring data from the cellular phone
- Inputting a phone number using

- Selecting a phone number from outgoing or incoming call history

■ Adding procedure

STEP 1 Select “Add Entry” using a voice command or 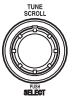

.

STEP 2 Use one of the following methods to input a telephone number:

Inputting a telephone number using a voice command

STEP2-1 Select “By Voice (By voice)” using a voice command or

.

STEP2-2 Press the talk switch, say the desired number, and select “Confirm” using a voice command.

Transferring data from the cellular phone

STEP2-1 Select “By Phone” and then “Confirm” using a voice command or

.

STEP2-2 Transfer the data from the cellular phone.

Refer to the manual that comes with the cellular phone for the details of transferring data.

STEP2-3 Select the data to be registered by either of the following methods:

a. Say “Previous” or “Next” until the desired data is displayed, and select “Confirm” using a voice command.

b. Select the desired data using

.

Inputting a phone number using 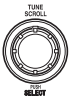

STEP2-1 Select “Manual Input” using 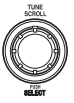 .

STEP2-2 Input a phone number using 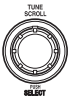 , and press once again.

Input the phone number 1 digit at a time.

Selecting a phone number from outgoing or incoming call history

STEP2-1 Select “Call History” using a voice command or .

STEP2-2 Select “Outgoing Call History (Outgoing)” or “Incoming Call History (Incoming)” using a voice command or .

STEP2-3 Select the data to be registered by either of the following methods:

a. Say “Previous” or “Go back” until the desired data is displayed, and select “Confirm” using a voice command.

b. Select the desired data using .

STEP 3 Select the name to be registered by either of the following methods, and select “Confirm” using a voice command or

:

a. Press the talk switch and say the desired name.

b. Select “Record Name” using

, and say the desired name.

STEP 4 Select “Confirm” using a voice command or

.

In STEP 3 , selecting “Speed Dial (Set speed dial)” instead of “Confirm” registers the newly added phone number as a speed dial.

Setting speed dials

STEP 1 Select “Speed Dial (Set speed dial)” using a voice command or

.

STEP 2 Select the data to be registered as a speed dial by either of the following methods:

a. Press the talk switch, say desired number, and select “Confirm” using a voice command or

.

b. Press the talk switch, and say “List names”. While the desired name is being read aloud, press the talk switch, and select “Confirm” using a voice command or

.

c. Select the desired data using

.

STEP 3 Select the desired preset button, and register the data into speed dial by either of the following methods:

a. Press the desired preset button, and select “Confirm” using a voice command or

.

b. Press and hold the desired preset button.

Changing a registered name

STEP 1 Select “Change Name” using a voice command or

.

STEP 2 Select the name to be changed by either of the following methods.

a. Press the talk switch, say desired name, and select “Confirm” using a voice command or

.

b. Press the talk switch, and say “List names”. While the desired name is being read aloud, press the talk switch, and select “Confirm” using a voice command or

.

c. Select the desired name using

.

STEP 3 Select “Record Name” with

or the talk switch.

STEP 4 Say a new name, and select “Confirm” using a voice command or

.

Deleting registered data

STEP 1 Select “Delete Entry” using a voice command or 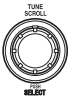

.

STEP 2 Select the data to be deleted by either of the following methods, and select “Confirm” using a voice command or 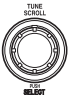

:

a. Press the talk switch, and say the name of the desired phone number to be deleted.

b. Press the talk switch, say “List phones”. While the name of the desired phone number is being read aloud, press the talk switch.

Deleting speed dials

STEP 1 Select “Delete Speed Dial” using a voice command or

.

STEP 2 Press the preset button in which the desired speed dial is registered, and select “Confirm” using a voice command or

.

Listing the registered data

Selecting “List names” using a voice command causes a list of the registered data to be read aloud.

When listing is complete, the system returns to “Phonebook”.
Pressing the talk switch while the desired data is being read aloud selects the data, and the following function will be available.

- Dialing: “Dial”
- Changing a registered name: “Change Name”
- Deleting an entry: “Delete Entry”
- Setting a speed dial: “Speed Dial (Set speed dial)”

Limitation of number of digits

A phone number that exceeds 24 digits cannot be registered.

Interior lights list

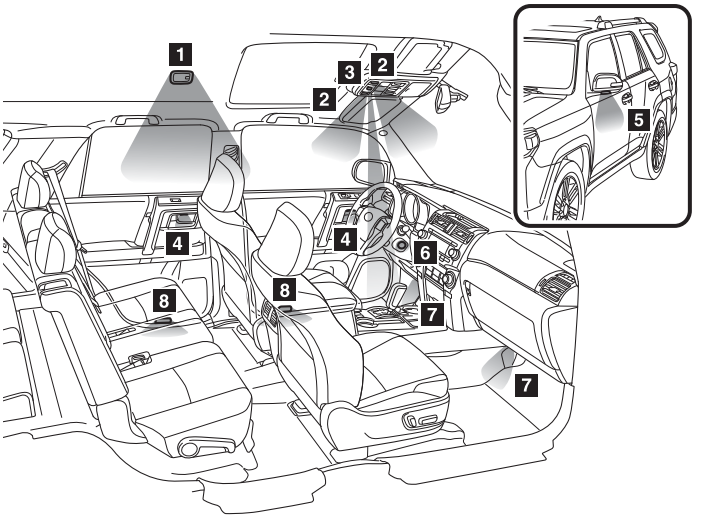

1 Rear interior light (→P. 414)

2 Front personal lights/front interior light (→P. 414)

3 Shift lever light (when the engine switch is in the “ACC” or “ON” position [without a smart key system] or “ENGINE START STOP” switch is in ACCESSORY or IGNITION ON mode [with a smart key system])

4 Inside door handle lights (if equipped)

5 Outer foot lights (if equipped)

6 Engine switch light (vehicles without a smart key system)

7 Footwell lights (if equipped)

8 Door courtesy lights (if equipped)

Turning the instrument panel light control dial fully downward disables the inside door handle lights, footwell lights and shift lever light. (→P. 187)

Interior lights

Front

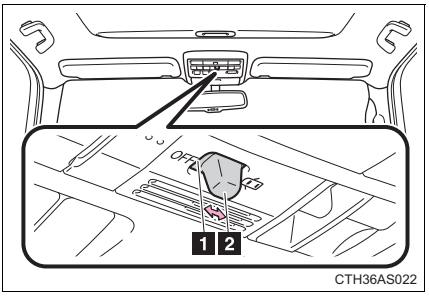

1 Turns the lights off

2 Turns the door position on

Rear

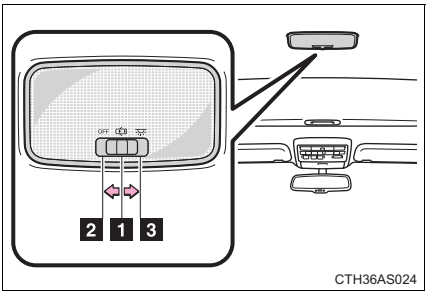

1 Turns the door position on

2 Turns the light off

3 Turns the light on

Personal lights

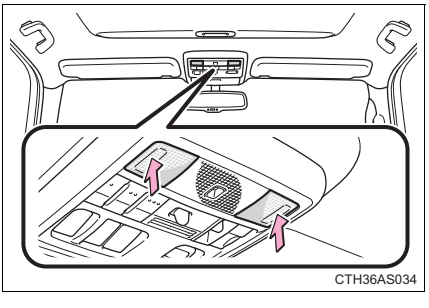

Turns the lights on/off

■ **Illuminated entry system**

Vehicles without a smart key system

The lights automatically turn on/off according to the engine switch position, whether the doors are locked/unlocked, and whether the doors are open/closed.

Vehicles with a smart key system

The lights automatically turn on/off according to “ENGINE START STOP” switch mode, the presence of the electronic key, whether the doors are locked/unlocked, and whether the doors are open/closed.

■ **To prevent battery discharge**

If the following lights remain on when the door is not fully closed, the lights will go off automatically after 20 minutes:

- Engine switch light
- Front interior light (when the switch is in the position)
- Rear interior light (when the switch is in the position)
- Footwell lights
- Inside door handle lights

■ **Customization that can be configured at Toyota dealer**

Settings (e.g. the time elapsed before lights turn off) can be changed. (Customizable features →P. 640)

List of storage features

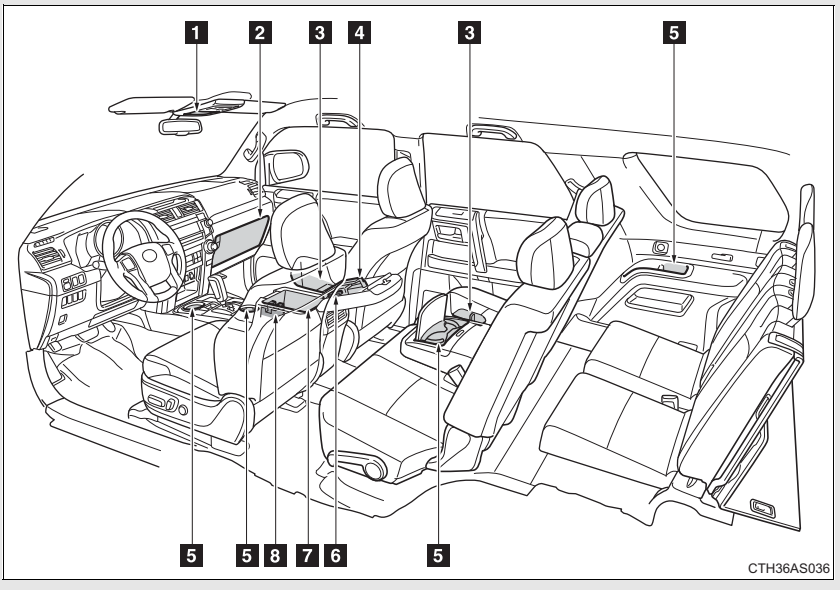

1 Auxiliary box
2 Glove box
3 Bottle holders
4 Tissue pocket
5 Cup holders
6 Pen holder
7 Console box
8 Coin holder

CAUTION

■Items that should not be left in the storage spaces

Do not leave glasses, lighters or spray cans in the storage spaces, as this may cause the following when cabin temperature becomes high:

- Glasses may be deformed by heat or cracked if they come into contact with other stored items.
- Lighters or spray cans may explode. If they come into contact with other stored items, the lighter may catch fire or the spray can may release gas, causing a fire hazard.

Glove box

The glove box can be opened by pressing the lock release button and can be locked and unlocked by using the master key (vehicles without a smart key system) or the mechanical key (vehicles with a smart key system).

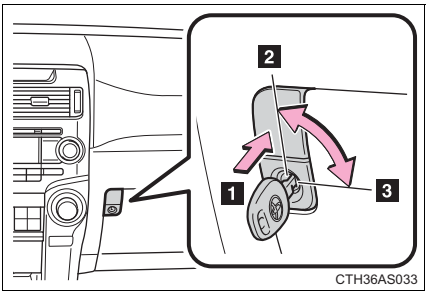

1 Open
2 Unlock
3 Lock

CAUTION

■Caution while driving

Keep the glove box closed. In the event of sudden braking, an accident may occur due to an occupant being struck by the open glove box or the items stored inside.

Console box

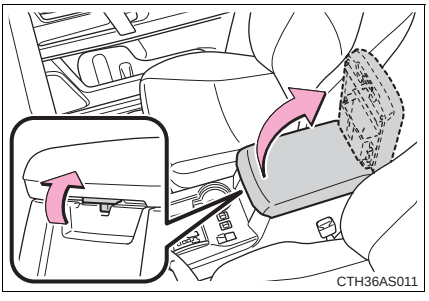

Lift the lid while pulling up the knob to release the lock.

■The separator can be used in either of the positions shown in the illustration

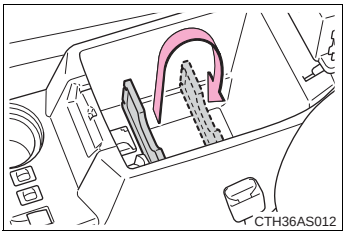

Change the separator position.

CAUTION

■Caution while driving

Keep the console box closed. In the event of sudden braking, an accident may occur due to an occupant being struck by the open console box or the items stored inside.

Coin holder

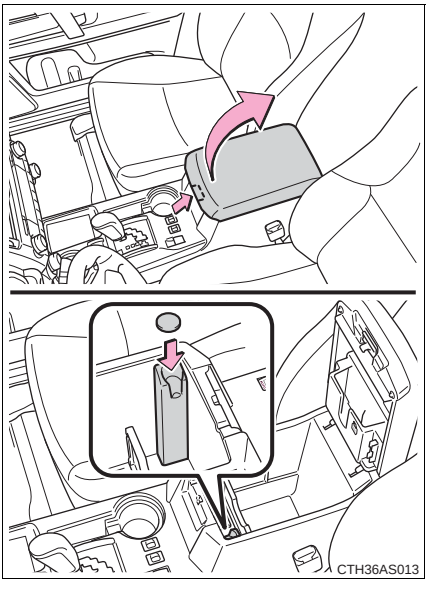

Lift the lid while pulling up the knob to release the lock.

CAUTION

■ Caution while driving

Keep the console box closed. In the event of sudden braking, an accident may occur due to an occupant being struck by the open console box or the items stored inside.

Tissue pocket

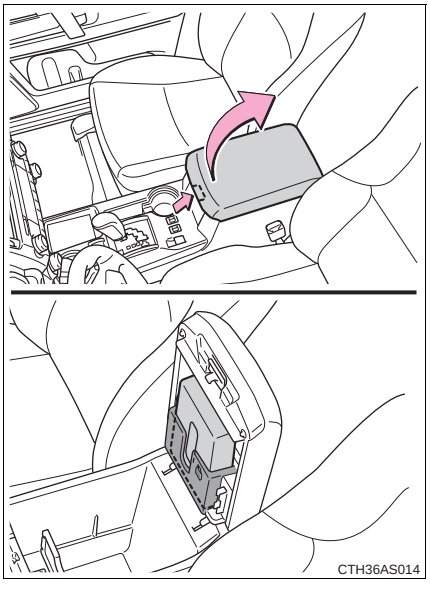

Lift the lid while pulling up the knob to release the lock.

CAUTION

■ Caution while driving

Keep the console box closed. In the event of sudden braking, an accident may occur due to an occupant being struck by the open console box or the items stored inside.

Pen holder

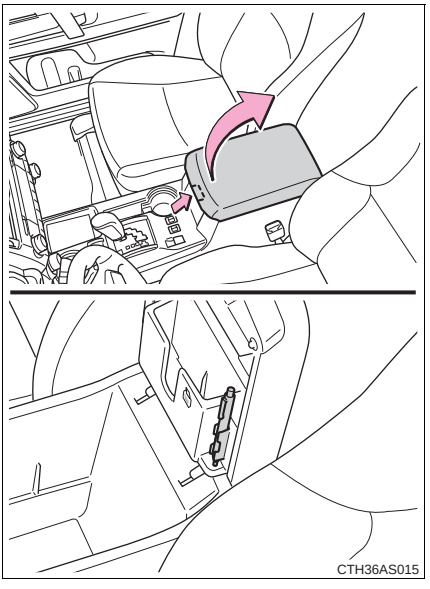

Lift the lid while pulling up the knob to release the lock.

CAUTION

■ Caution while driving

Keep the console box closed. In the event of sudden braking, an accident may occur due to an occupant being struck by the open console box or the items stored inside.

Auxiliary box (if equipped)

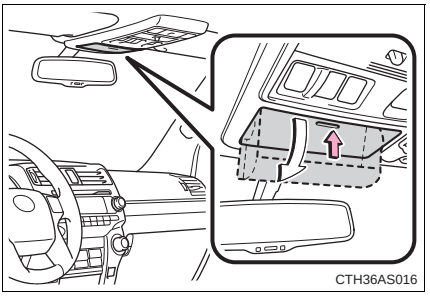

Push the lid.

CAUTION

■ Caution while driving

Keep the auxiliary box closed. In the event of sudden braking, an accident may occur due to an occupant being struck by an open auxiliary box or the items stored inside.

■ Items unsuitable for storing

Do not store items heavier than 0.4 lb. (0.2 kg).
Doing so may cause the auxiliary box to open and the items inside may fall out, resulting in an accident.

Cup holders

Front seats (standard type transmission)

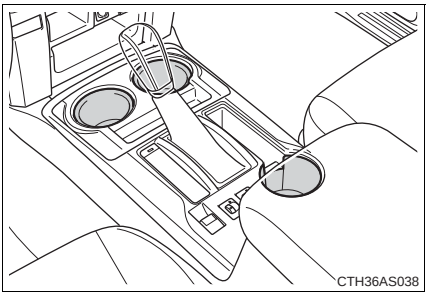

Front seats (multi-mode type transmission)

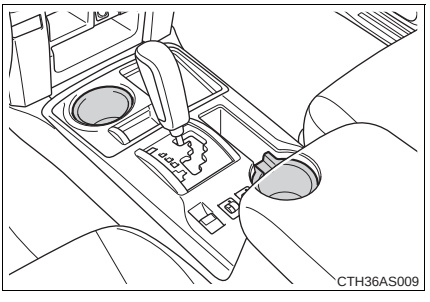

Rear seats (without third row seats)

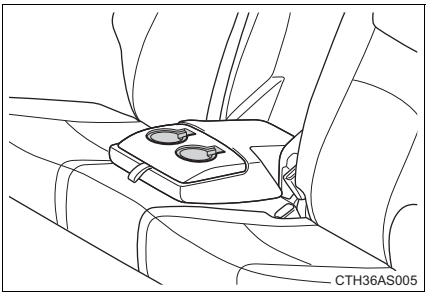

Pull down the rear seat center armrest.

Second row seats (with third row seats)

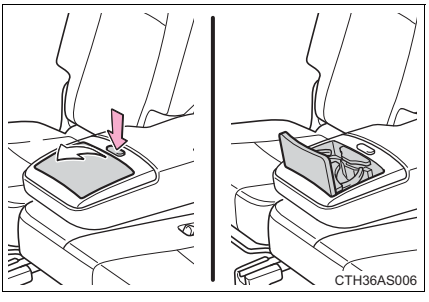

Pull down the second row seat center armrest and press down the button on the armrest.

Third row seats (if equipped)

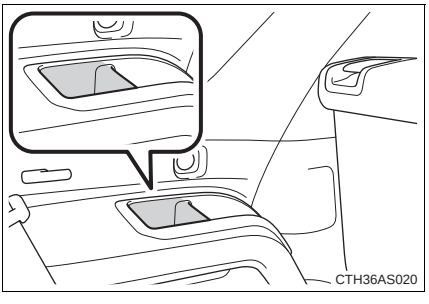

■ Adjusting the size of the cup holders

Front seats (standard type transmission)

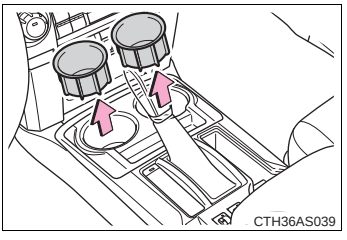

Remove the adapter.

Front seats (multi-mode type transmission)

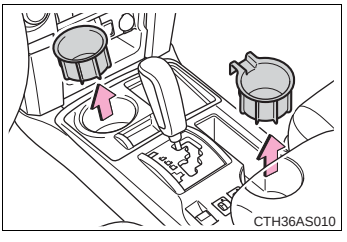

Remove the adapter.

Rear seats (without third row seats)

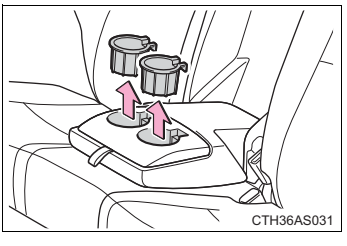

Remove the adapter.

CAUTION

Items unsuitable for the cup holder

Do not place anything other than cups or beverage cans in the cup holders. Other items may be thrown out of the holders in the event of an accident or sudden braking, causing injury. If possible, cover hot drinks to prevent burns.

When not in use (second row seat cup holders only)

Keep the cup holders closed. In the event of sudden braking, an accident may occur due to an occupant being struck by the open cup holders or the items stored inside.

NOTICE

To prevent damage to the rear cup holders (second row seats only)

Stow the cup holders before stowing the armrest.

Bottle holders

Front seats

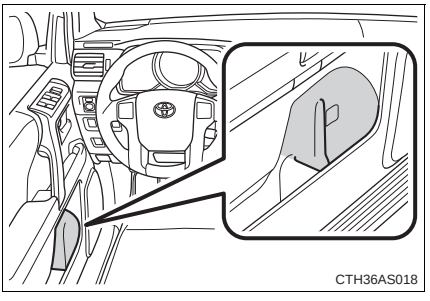

Rear seats (without third row seats)/Second row seats (with third row seats)

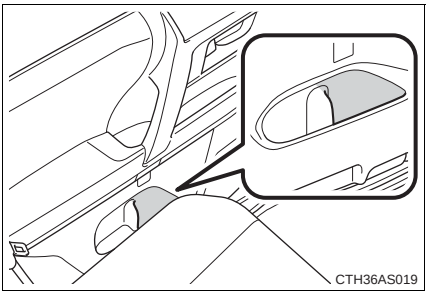

■ **When using the bottle holder**

- When storing a bottle, close the cap.
- The bottle may not be stored depending on its size or shape.

CAUTION

■ **Items unsuitable for the bottle holder**

Do not place anything other than a bottle in the bottle holders.
Other items may be thrown out of the holders in the event of an accident or sudden braking and cause injury.

NOTICE

Items that should not be stowed in the bottle holders

Put the cap on before stowing a bottle. Do not place open bottles in the bottle holders, or glasses and paper cups containing liquid. The contents may spill and glasses may break.

Sun visors

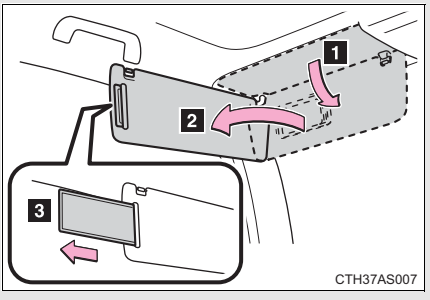

1 To set the visor in the forward position, flip it down.

2 To set the visor in the side position, flip down, unhook, and swing it to the side.

3 To use the side extender, place the visor in the side position, then slide it backward.

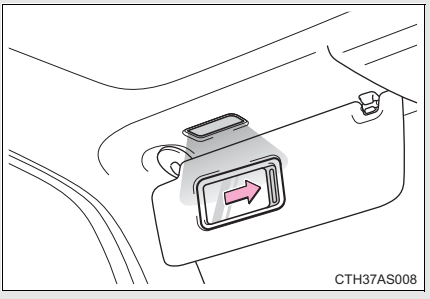

Slide the cover to open.

The light turns on when the cover is opened.

NOTICE

To prevent battery discharge

Do not leave the vanity lights on for extended periods while the engine is off.

Clock

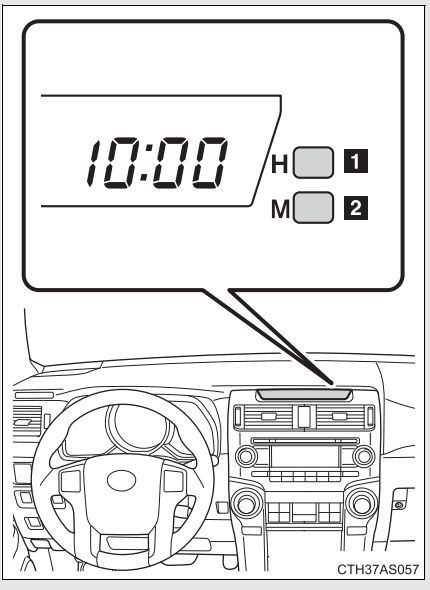

1 Adjusts the hours

2 Adjusts the minutes

■ **For quicker adjustment of the clock**

To advance the minutes and hours quickly, press and hold the “M” or “H” button.
The time can be adjusted back or forth by following the procedure below:

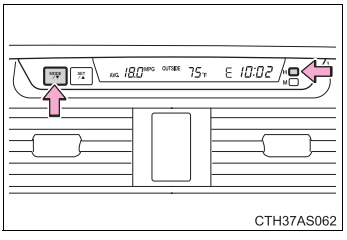

The hour or minute can be moved forward or backward by pressing the “MODE/▼” or “SET/▲” button while pressing and holding the “H” or “M” button. If the “MODE/▼” or “SET/▲” button is also pressed and held in the above operation, the hour or minute will move faster.

■ **The clock is displayed when**

Vehicles without a smart key system

The engine switch is in the “ACC” or “ON” position.

Vehicles with a smart key system

The “ENGINE START STOP” switch is in ACCESSORY or IGNITION ON mode.

■ **When disconnecting and reconnecting battery terminals**

The clock data will be reset.

Outside temperature display

The temperature display shows temperatures within the ranges of -40°F (-40°C) and 122°F (50°C).

Vehicles without Multi-terrain Select

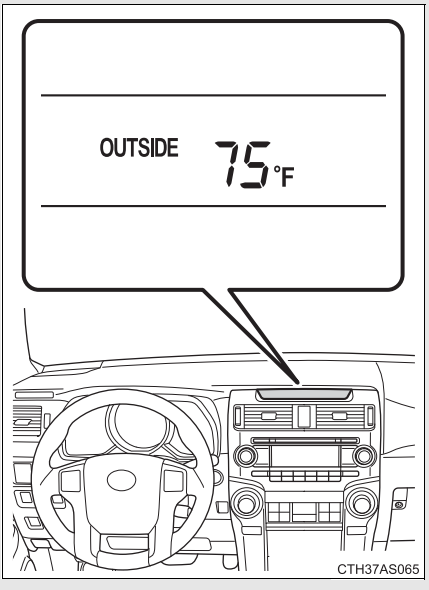

Vehicles with Multi-terrain Select

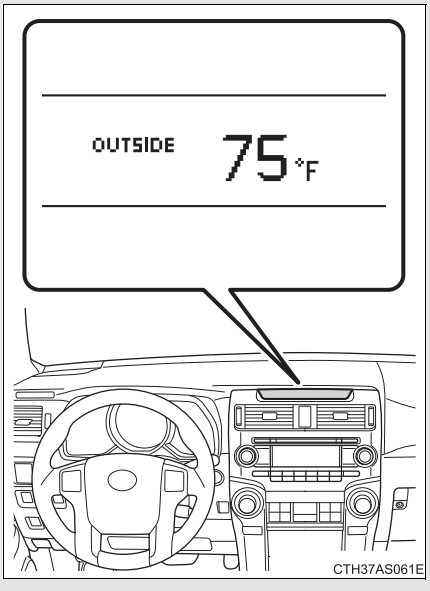

■ **The outside temperature is displayed when**

Vehicles without a smart key system
The engine switch is in the “ON” position.

Vehicles with a smart key system
The “ENGINE START STOP” switch is in IGNITION ON mode.

■ICE indicator

Vehicles without Multi-terrain Select

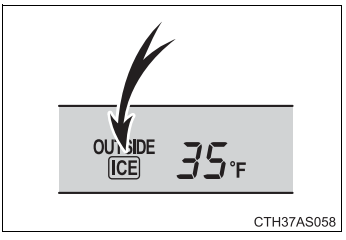

CTH37AS058

If the outside temperature lowers to 37 °F (3 °C) or below when the engine switch is in the “ON” position (vehicles without a smart key system) or the “ENGINE START STOP” switch is in IGNITION ON mode (vehicles with a smart key system), the “ICE” indicator will come on to warn the driver that roads may be icy. Check the road surface and drive carefully. (The indicator will go off when the outside temperature rises to 41 °F [5 °C].)

Vehicles with Multi-terrain Select

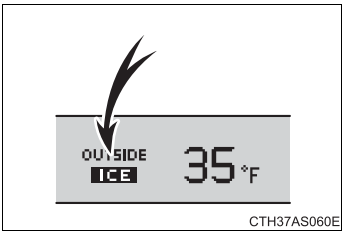

CTH37AS060E

If the outside temperature lowers to 37 °F (3 °C) or below when the engine switch is in the “ON” position, the “ICE” indicator will come on to warn the driver that roads may be icy. Check the road surface and drive carefully. (The indicator will go off when the outside temperature rises to 41 °F [5 °C].)

■Display

In the following situations, the correct outside temperature may not be displayed, or the display may take longer than normal to change:

- When the vehicle is stopped, or moving at low speeds (less than 14 mph [24 km/h])
- When the outside temperature has changed suddenly (at the entrance/exit of a garage, tunnel, etc.)

Power outlets (12V DC)

The power outlet can be used for 12 V accessories that run on less than 10 A.

Center panel

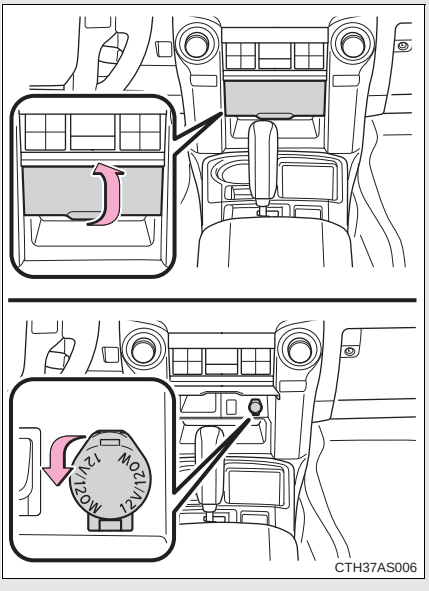

Glove box

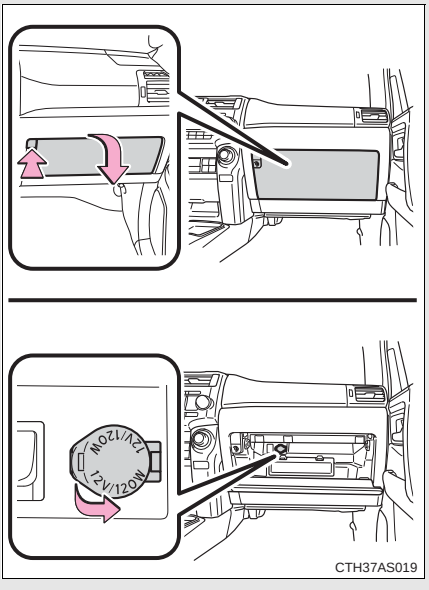

Luggage compartment (vehicles without the 120V AC)

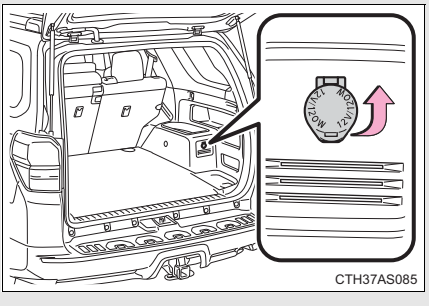

Luggage compartment (vehicles with the 120V AC)

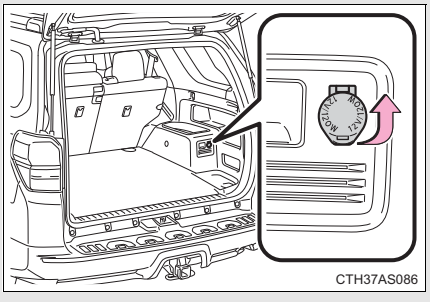

The power outlet can be used when

Vehicles without a smart key system
The engine switch is in the “ACC” or “ON” position.

Vehicles with a smart key system
The “ENGINE START STOP” switch is in ACCESSORY or IGNITION ON mode.

NOTICE

To avoid damaging the power outlet

Close the power outlet lid when the power outlet is not in use.
Foreign objects or liquids that enter the power outlet may cause a short circuit.

To prevent blown fuse

Do not use an accessory that uses more than 12 V 10 A.

To prevent battery discharge

Do not use the power outlet longer than necessary when the engine is not running.

Power outlets (120V AC)*

The power outlet can be used for electrical appliances.

Main switch

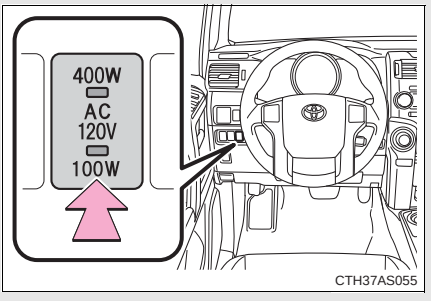

To use the power outlet, turn on the main switch.

The power supply starts a few seconds after the main switch is pressed.

Power outlet socket (in the console box)

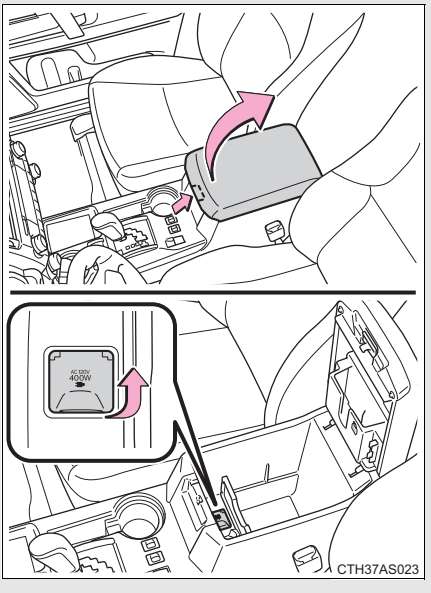

*: If equipped

Power outlet socket (luggage compartment)

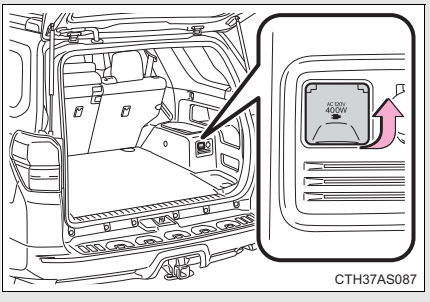

Maximum available capacity of the power outlet

■ While the vehicle is being driven

The maximum capacity of the power outlet is always 120V AC/100W.

■ When the vehicle is stationary

The maximum capacity of the power outlet varies depending on the position of the shift lever.

- The maximum capacity is 120V AC/100W when the shift lever is in any position other than P or N.
- The maximum capacity is 120V AC/400W when the shift lever is in P or N.

  The maximum capacity of 400W can only be restored by turning the power outlet main switch off and then on again with the shift lever in P or N.

■ **The power outlet can be used when**

The engine is running.

■ **The indicator light changes according to the maximum available capacity as follows:**

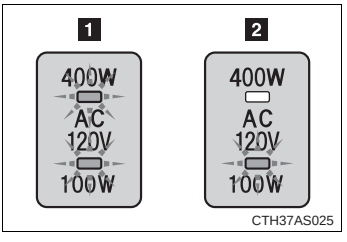

1 120V AC/400W

2 120V AC/100W

■ **When the power outlet is in operation**

The sound of the cooling fan may be heard from the right side of the luggage compartment. This is normal and does not indicate a malfunction.

■ **If the engine is started with the power outlet main switch on**

The maximum capacity of the power supply may decrease to below the standard, or may be cut off completely, even when the vehicle is stationary.

■ **The protection circuit may be activated to cut the power supply if any of the following conditions apply:**

- The engine is started with the power outlet main switch on.
- Use of electrical appliances exceeding the maximum capacity is attempted.

  A sound may be heard when the protection circuit is activated. This is normal and does not indicate a malfunction.
- Electrical appliances, which consume power exceeding 100W, have been used continuously for a long time period.
- The total power usage by all electrical features (headlights, air conditioning, etc.) has exceeded the total vehicle maximum for an extended period of time.

■ **If the protection circuit is activated and the power supply is cut, conduct the following procedure:**

STEP 1 Park the vehicle in a safe place, and then securely apply the parking brake.

STEP 2 Check and ensure that the shift lever is in P or N.

STEP 3 Make sure that the power consumption of the electric appliance is within the maximum capacity of the power outlet and the appliance is not broken.

STEP 4 Press the power outlet main switch again.

When the cabin temperature is high, open the windows to cool the temperature down. Once it reaches the normal temperature, turn the power outlet main switch on again.

If the power supply does not resume even after the above procedure has been performed, have the vehicle inspected by your Toyota dealer.

CAUTION

■ **Using a power outlet**

Observe the following precautions to reduce the risk of injury.

- Use of the power outlet when it is wet with water or snow may result in electrical shocks and is extremely dangerous. The power outlet must be thoroughly dried before use.
- Do not allow children to use or play with the power outlet.
- Be careful not to get any part of your body caught in the power outlet lid.
- When using electrical appliances, strictly follow any cautions and notices written on their labels and in the manufacturers' instruction manuals.
- Do not modify, disassemble or repair the power outlet or its inverter in any way. Doing so may result in unexpected malfunctions or accidents, which could cause serious damage or injuries. Contact your Toyota dealer for any necessary repairs.

■ **To prevent injuries and accidents, secure all electric appliances before use and do not use any appliances that may do any of the following:**

- Distract the driver while driving, or hamper safe driving.
- Result in a fire or burn injuries due to the appliance rolling, falling or overheating while driving.
- Emit steam while the windows of the cabin are closed.

■ **To prevent unexpected accidents, such as electric shocks, do not perform any of the following actions:**

- Using the power outlet for electric heaters while sleeping.
- Contaminating the power outlet with liquid substances or mud.
- Handling electrical appliance plugs at the power outlet with wet hands or feet.
- Inserting foreign objects into the power outlet.
- Using malfunctioning electric appliances.
- Inserting inappropriate or badly fitting plugs into the power outlet.

NOTICE

To avoid damaging the power outlet and the plug

- Close the power outlet lid when not in use.
- Do not allow foreign objects or liquids to enter the power outlet, as this may cause a short circuit.
- Do not use plug adaptors to connect too many plugs to the power outlet.
- After removing a plug, gently close the power outlet lid.

To prevent the fuse from being blown

Do not use a 120V AC appliance that requires more than the maximum capacity of the power outlet. If a 120V AC appliance that consumes more than the maximum capacity is used, the protection circuit will cut the power supply.

Appliances that may not operate properly (120V AC)

The following 120V AC appliances may not operate even if their power consumption is under maximum capacity.

- Appliances with high initial peak wattage
- Measuring devices that process precise data.
- Other appliances that require an extremely stable power supply

To prevent battery discharge

Turn off all the vehicle's electronic equipment and accessories, such as the headlights and air conditioning, when electrical appliances that consume in excess of 100W are used continuously for long periods of time.

To prevent any damage caused by heat

- Do not use any electrical appliances that give off intense heat, such as toasters, in any locations including the internal or external trim, seats and deck.
- Do not use any electrical appliances that are easily affected by vibration or heat inside the vehicle. Vibration while driving, or the heat of the sun while parking, may result in damage to those electrical appliances.

NOTICE

If any electrical appliances are to be used while driving

Securely fasten both the appliances and their cables to prevent them from falling or getting caught in any of the power train components.

If the power outlet is loose when an electrical appliance plug is connected

Replace the outlet. Contact your Toyota dealer for any necessary replacements.

If the power outlet gets dirty

Turn the main switch off and use a soft, clean cloth to wipe it gently. Do not use any cleansing materials, such as organic solvents, wax, or compound cleaners, as these may damage the power outlet or cause it to malfunction.

Seat heaters*

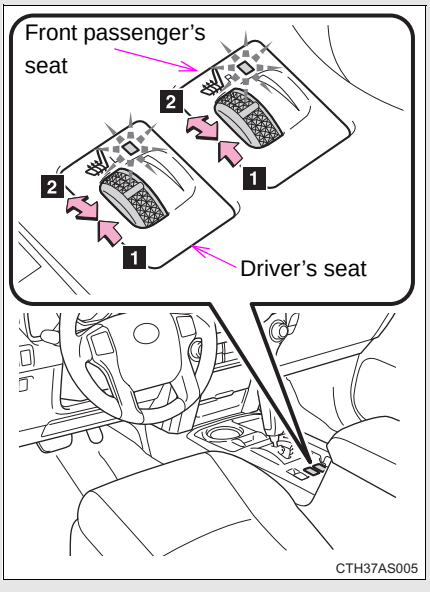

1 On

The indicator light comes on.

2 Adjusts the seat temperature

The further you move the dial forward, the warmer the seat becomes.

■ **The seat heaters can be used when**

Vehicles without a smart key system
The engine switch is in the "ON" position.

Vehicles with a smart key system
The "ENGINE START STOP" switch is in IGNITION ON mode.

■ **When not in use**

Move the dial fully backward. The indicator light turns off.

*: If equipped

CAUTION

■ **Burns**

- Use caution when seating the following persons in a seat with the seat heater on to avoid the possibility of burns:
  - Babies, small children, the elderly, the sick and the physically challenged
  - Persons with sensitive skin
  - Persons who are fatigued
  - Persons who have taken alcohol or drugs that induce sleep (sleeping drugs, cold remedies, etc.)
- Do not cover the seat with anything when using the seat heater.
  Using the seat heater with a blanket or cushion increases the temperature of the seat and may lead to overheating.
- Do not use the seat heater more than necessary. Doing so may cause minor burns or overheating.

NOTICE

■ **To prevent seat heater damage**

Do not put heavy objects that have an uneven surface on the seat and do not stick sharp objects (needles, nails, etc.) into the seat.

■ **To prevent battery discharge**

Turn the seat heaters off when the engine is not running.

Armrest

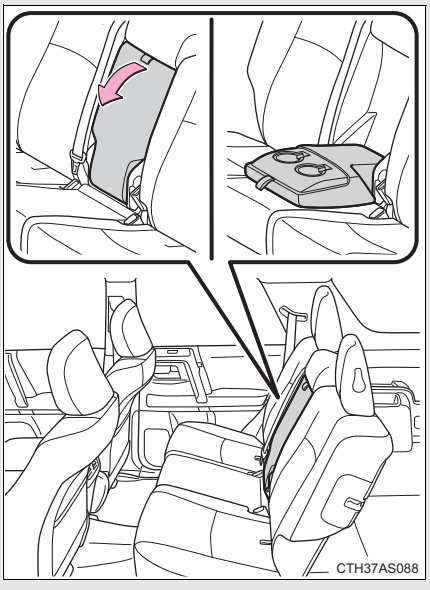

Fold down the armrest for use.

NOTICE

■ **To prevent damage to the armrest**

Do not apply too much load on the armrest.

Use only floor mats designed specifically for vehicles of the same model and model year as your vehicle. Fix them securely in place onto the carpet.

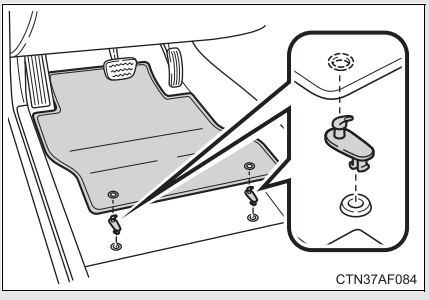

Fix the floor mat in place using the retaining hooks (clips) provided.

For details, refer to the floor mat retention clip installation instructions supplied with the clips.

CAUTION

Observe the following precautions.
Failure to do so may cause the driver's floor mat to slip, possibly interfering with the pedals while driving. An unexpectedly high speed may result or it may become difficult to stop the vehicle, leading to a serious accident.

■When installing the driver's floor mat

- Do not use floor mats designed for other models or different model year vehicles, even if they are Toyota Genuine floor mats.
- Only use floor mats designed for the driver's seat.
- Always install the floor mat securely using the retaining hooks (clips) provided.
- Do not use two or more floor mats on top of each other.
- Do not place the floor mat bottom-side up or upside-down.

■Before driving

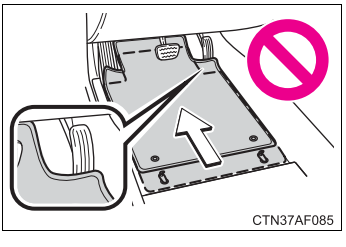

- Check that the floor mat is securely fixed in the right place with all the provided retaining hooks (clips). Be especially careful to perform this check after cleaning the floor.
- With the engine stopped and the shift lever in P, fully depress each pedal to the floor to make sure it does not interfere with the floor mat.

Compass

The compass on the accessory meter display indicates the direction in which the vehicle is heading.

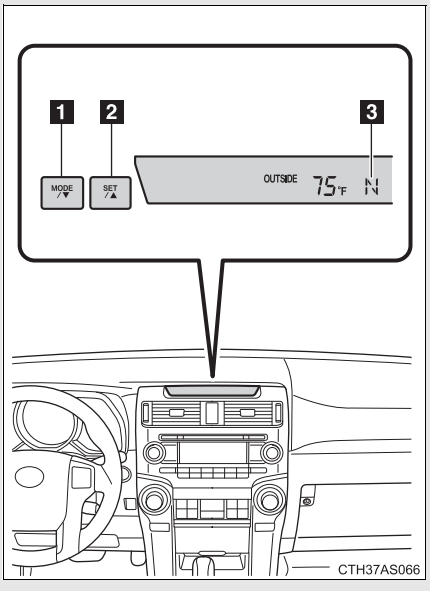

1 “MODE/▼” button

2 “SET/▲” button

3 Direction display

■ Displays and directions

Display	Direction
“N”	North
“NE”	Northeast
“E”	East
“SE”	Southeast
“S”	South
“SW”	Southwest
“W”	West
“NW”	Northwest

Calibrating the compass

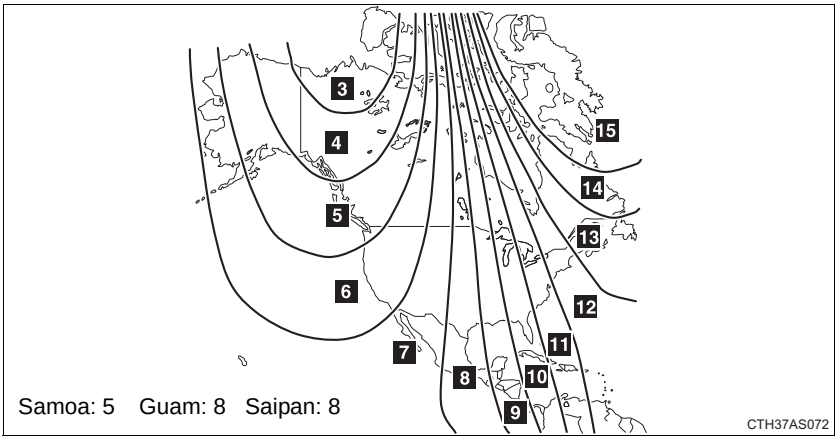

The direction display deviates from the true direction determined by the earth's magnetic field. The amount of deviation varies depending on the geographic position of the vehicle.

If you cross over one of the map boundaries shown in illustration, the compass will deviate.
To obtain higher precision or perfect calibration, refer to "Deviation calibration".

Deviation calibration

STEP 1 Stop the vehicle.

STEP 2 Change the accessory meter display to deviation calibration mode by doing the following.

Vehicles without Multi-terrain Select

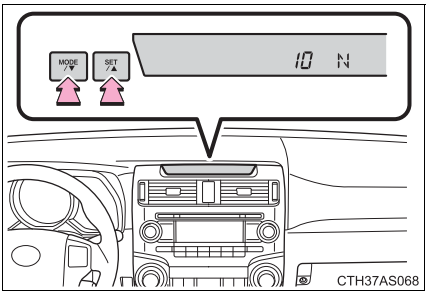

When the parking lights are turned on:
Press and hold the “MODE/▼” button.
A number (1 to 15) will appear on the display.

When the parking lights are off:
In accessory meter light control mode (→P. 196), press and hold the “MODE/▼” button.
A number (1 to 15) will appear on the display.

Vehicles with Multi-terrain Select

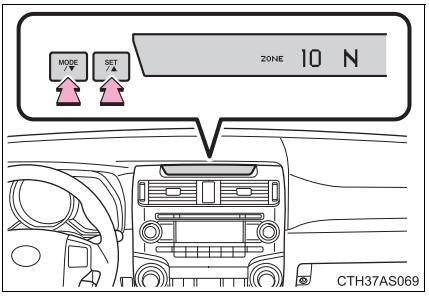

When the parking lights are turned on:
Press and hold the “MODE/▼” button.
A number (1 to 15) will appear on the display.

When the parking lights are off:
In accessory meter light control mode (→P. 196), press and hold the “MODE/▼” button.
A number (1 to 15) will appear on the display.

STEP 3 Referring to the map above, press the “MODE/▼” or “SET/▲” button to select the number of the zone you are in.

STEP 4 Press and hold the “SET/▲” button to confirm the number and to exit deviation calibration mode. (If the button is pressed for more than 6 seconds, the number will automatically be confirmed and the display returned to normal.)

Circling calibration

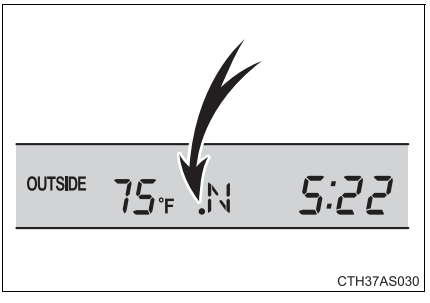

If “•” appears on the left side of the direction display, circling calibration needs to be performed.

STEP 1 Stop the vehicle in a place where it is safe to drive in a circle.

STEP 2

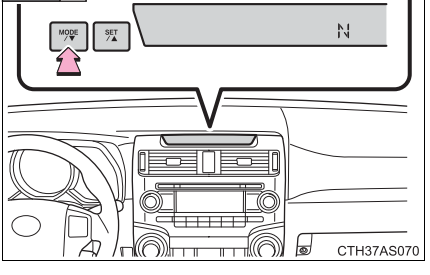

In deviation calibration mode (→P. 452), press and hold the “MODE/▼” button to change to circling calibration mode.

“•” on the left side of the direction display will blink.

STEP 3

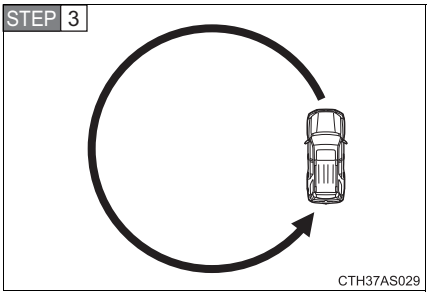

Drive the vehicle at 5 mph (8 km/h) or less in a circle until a direction is displayed.

If there is not enough space to drive in a circle, drive around the block until a direction is displayed.

STEP 4 Press and hold the “SET/▲” button to confirm the direction and to exit circling calibration mode. (If the button is pressed for several minutes, the direction will automatically be confirmed and the display returned to normal.)

STEP 5 Make sure that “•” on the left side of the direction display has gone off. If “•” is illuminated, perform the above procedure again.

■Conditions unfavorable to correct operation

The compass may not show the correct direction in the following conditions:

- The vehicle is stopped immediately after turning.
- The vehicle is on an inclined surface.
- The vehicle is in a place where the earth's magnetic field is subject to interference by artificial magnetic fields (underground car park/parking lot, under a steel tower, between buildings, roof car park/parking lot, near an intersection, near a large vehicle, etc.).
- The vehicle has become magnetized.
  (There is a magnet or metal object near the accessory meter display.)
- The battery has been disconnected.
- A door is open.

Circling calibration error message (vehicles with Multi-terrain Select)

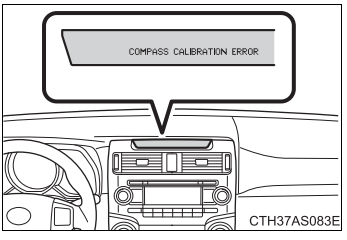

In the following situations, an error message regarding the circling calibration will appear on the accessory meter display for a few seconds:

- The vehicle was driven too fast during the circling calibration.
- The circling calibration was not completed successfully within about two minutes.

CAUTION

While driving the vehicle

Do not adjust the display. Adjust the display only when the vehicle is stopped.

When doing the circling calibration

Secure a wide space, and watch out for people and vehicles in the vicinity. Do not violate any local traffic rules while performing circling calibration.

NOTICE

To avoid compass malfunctions

Do not place magnets or any metal objects near the accessory meter display.
Doing this may cause the compass sensor to malfunction.

To ensure normal operation of the compass

- Do not perform a circling calibration of the compass in a place where the earth's magnetic field is subject to interference by artificial magnetic fields.
- During calibration, do not operate electric systems (moon roof, power windows, etc.) as they may interfere with the calibration.

■ Cargo hooks

Vehicles with third seats

STEP 1 Fold down the third seats. (→P. 72)

STEP 2

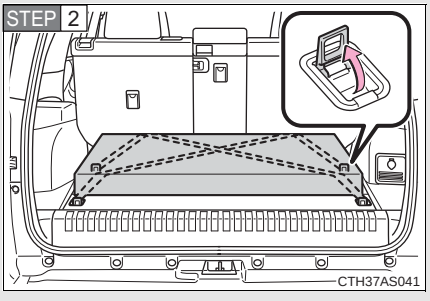

Raise the hook to use.

The cargo hooks are provided for securing loose items.

Vehicles without third seats

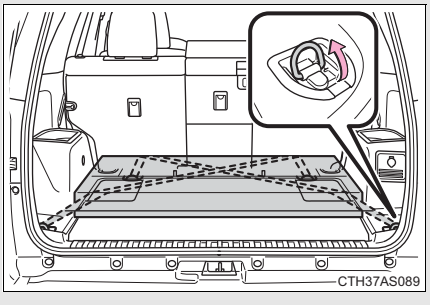

Raise the hook to use.

The cargo hooks are provided for securing loose items.

■ Cargo net hooks

The cargo net itself is not included as original equipment.

Vehicles with third seats (pattern 1)

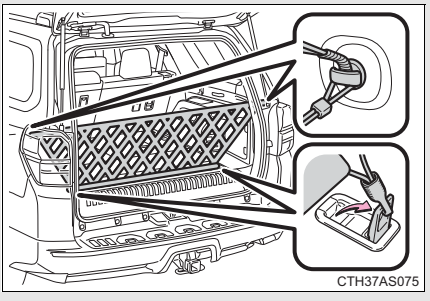

Raise the rear cargo hook to use.

Vehicles with third seats (pattern 2)

STEP 1 Fold down the third seats. (→P. 72)

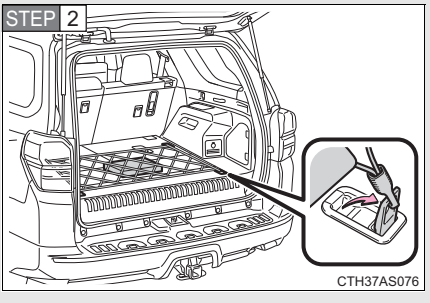

Raise the cargo hook to use.

Vehicles without third seats (pattern 1)

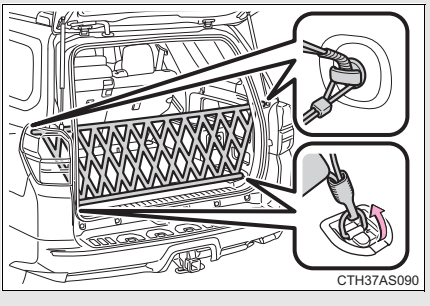

Raise the rear cargo hook to use.

Vehicles without third seats (pattern 2)

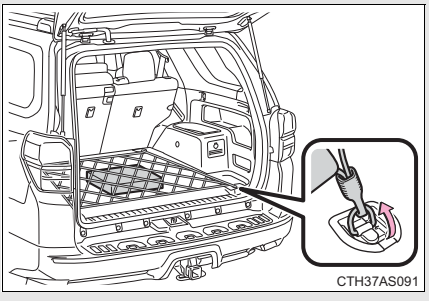

Raise the cargo hook to use.

■ Storage compartment

Type A (if equipped)

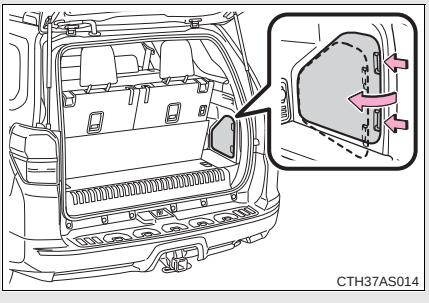

Open the storage compartment as shown.

Type B (if equipped)

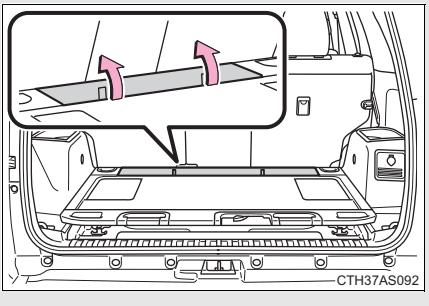

Open the storage compartment as shown.

Slide deck (if equipped)

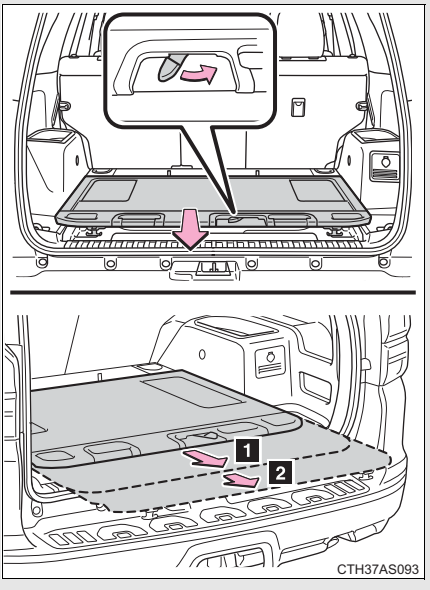

Slide the deck while turning the lock release lever, and then release the lever after sliding the deck to the lock position.

1 Half-slide locked position

2 Full-slide locked position

Grocery bag hooks

Type A

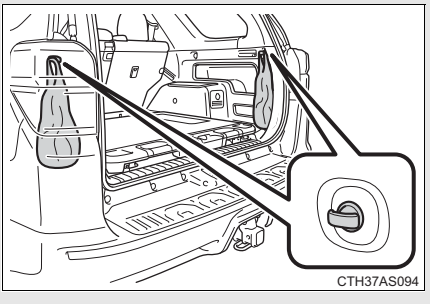

Type B (if equipped)

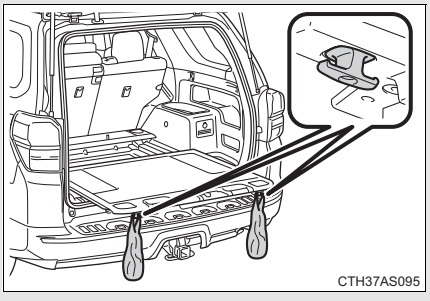

To use the grocery bag hooks, slide the slide deck to the full-slide locked position.
(→P. 459)

CAUTION

■ **When the cargo hooks are not in use**

To avoid injury, always return the cargo hooks to their stowed positions.

■ **Slide deck operating precaution (if equipped)**

- Be careful not to get hands or feet pinched by the slide deck.
- Be careful not to allow the slide deck to hit any persons or luggage while sliding the deck.
- Do not operate the slide deck while someone is on it.
  Doing so may cause an accident.
- If operating the slide deck when the vehicle is stopped on an incline, the slide deck may move faster. Be careful not to allow the slide deck to hit you or pinch your fingers etc.
- After sliding the deck, make sure it is securely locked in position.
- Do not close the back door while any person is sitting on the slide deck or any person is between the slide deck and back door.
- Do not stow any objects into the space between the slide deck rails.

NOTICE

■ **To prevent damage to the cargo net hooks**

Avoid hanging things other than a cargo net on them.

■ **Slide deck weight capacity (if equipped)**

Do not load anything heavier than 440 lb. (200 kg) on the sliding deck.

■ **Grocery bag hook weight capacity**

Do not hang any object heavier than 8.8 lb. (4 kg) on the grocery bag hooks.

■ **When using the slide deck (if equipped)**

- Do not close the back door while the slide deck is sliding out. Doing so may cause the back door or slide deck to break.
- If operating the slide deck when the vehicle is stopped on an incline, the slide deck may move faster. Be careful as luggage may become damaged or fly out and damage the cabin.

Garage door opener

The garage door opener can be programmed to operate garage doors, gates, entry doors, door locks, home lighting systems, security systems, and other devices.

The garage door opener (HomeLink® Universal Transceiver) is manufactured under license from HomeLink®.

Programming HomeLink® (for U.S. owners)

The HomeLink® compatible transceiver in your vehicle has 3 buttons which can be programmed to operate 3 different devices. Refer to the programming method below appropriate for the device.

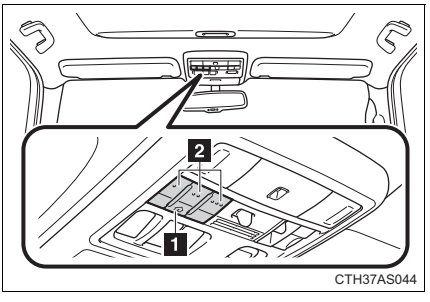

1 Indicator light

2 Buttons

■ Programming HomeLink®

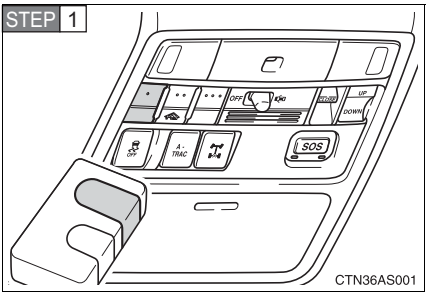

Point the remote control transmitter for the device 1 to 3 in. (25 to 75 mm) from the HomeLink® buttons.

Keep the HomeLink® indicator light in view while programming.

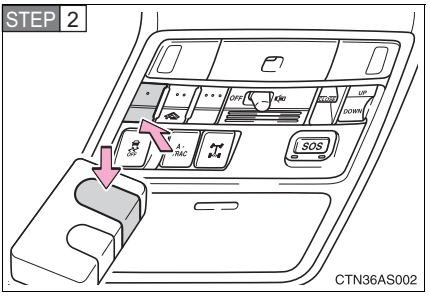

Press and hold one of the HomeLink® buttons and the transmitter button. When the HomeLink® indicator light changes from a slow to a rapid flash after 20 seconds, release both buttons.

STEP 3

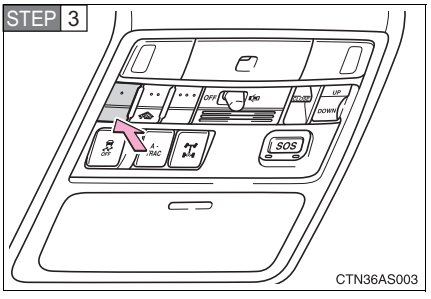

Test the HomeLink® operation by pressing the newly programmed button.

If a HomeLink® button has been programmed for a garage door, check to see if the garage door opens and closes. If the garage door does not operate, see if your garage transmitter is of the rolling code type. Press and hold the programmed HomeLink® button. The remote control transmitter is of the rolling code type if the HomeLink® indicator light flashes rapidly for 2 seconds and then remains lit. If your transmitter is the rolling code type, proceed to the heading “Programming a rolling code system”.

STEP 4 Repeat the steps above to program another device for any of the remaining HomeLink® buttons.

■ Programming a rolling code system (for U.S. owners)

If your device is rolling code equipped, follow the steps under the heading “Programming HomeLink®” before proceeding with the steps listed below.

STEP 1 Locate the learn button on the ceiling mounted garage door opener motor. The exact location and color of the button may vary by brand of garage door opener.

Refer to the operation manual supplied with the garage door opener for the location of the learn button.

STEP 2 Press the learn button.

Following this step, you have 30 seconds in which to initiate step 3 below.

STEP 3 Press and release the vehicle’s programmed HomeLink® button twice. The garage door may open.

If the garage door opens, the programming process is complete. If the door does not open, press and release the button a third time. This third press and release will complete the programming process by opening the garage door.

The ceiling mounted garage door opener motor should now recognize the HomeLink® signal and operate the garage door.

STEP 4 Repeat the steps above to program another rolling code system for any of the remaining HomeLink® buttons.

Programming an entry gate (for U.S. owners)/Programming a device in the Canadian market

STEP 1 Place the remote control transmitter 1 to 3 in. (25 to 75 mm) away from the HomeLink® buttons.

Keep the HomeLink® indicator light in view while programming.

STEP 2 Press and hold the selected HomeLink® button.

STEP 3 Repeatedly press and release (cycle) the remote control transmitter for 2 seconds each until step 4 is completed.

STEP 4 When the HomeLink® indicator light starts to flash rapidly, release the buttons.

STEP 5 Test the HomeLink® operation by pressing the newly programmed button. Check to see if the gate/device operates correctly.

STEP 6 Repeat the steps above to program another device for any of the remaining HomeLink® buttons.

Programming other devices

To program other devices such as home security systems, home door locks and lighting, contact your Toyota dealer for assistance.

Reprogramming a button

The individual HomeLink® buttons cannot be erased but can be reprogrammed. To reprogram a button, follow the “Reprogramming a HomeLink® button” instructions.

Operating HomeLink®

Press the appropriate HomeLink® button. The HomeLink® indicator light should come on.

The HomeLink® compatible transceiver in your vehicle continues to send a signal for up to 20 seconds as long as the button is pressed.

Erasing the entire HomeLink® memory (all three programs)

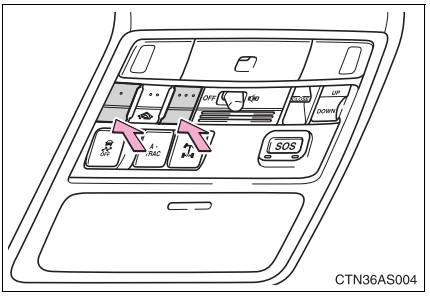

Press and hold the 2 outside buttons for 20 seconds until the indicator light flashes.

If you sell your vehicle, be sure to erase the programs stored in the HomeLink® memory.

Before programming

- Install a new battery in the remote control transmitter.
- The battery side of the remote control transmitter must be pointed away from the HomeLink® button.

Certification for the garage door opener

For vehicles sold in the U.S.A.

FCC ID: CB2300NHL3

NOTE:
This device complies with Part 15 of the FCC Rules. Operation is subject to the following two conditions: (1) this device may not cause harmful interference, and (2) this device must accept any interference received, including interference that may cause undesired operation.

FCC WARNING:
Changes or modifications not expressly approved by the party responsible for compliance could void the user's authority to operate the equipment.

For vehicles sold in Canada

NOTE:
Operation is subject to the following two conditions: (1) this device may not cause interference, and (2) this device must accept any interference, including interference that may cause undesired operation of the device.

When support is necessary

Visit on the web at www.homelink.com or call 1-800-355-3515.

CAUTION

When programming a garage door or other remote control devices

The garage door or other devices may operate, so ensure people and objects are out of danger to prevent potential harm.

Conforming to federal safety standards

Do not use the HomeLink® compatible transceiver with any garage door opener or device that lacks safety stop and reverse features as required by federal safety standards.
This includes any garage door that cannot detect an interfering object. A door or device without these features increases the risk of death or serious injury.

Safety Connect*

Safety Connect is a subscription-based telematics service that uses Global Positioning System (GPS) data and embedded cellular technology to provide safety and security features to subscribers. Safety Connect is supported by Toyota's designated response center, which operates 24 hours per day, 7 days per week.

Safety Connect service is available by subscription on select, telematics hardware-equipped vehicles.

By using the Safety Connect service, you are agreeing to be bound by the Telematics Subscription Service Agreement and its Terms and Conditions, as in effect and amended from time to time, a current copy of which is available at Toyota.com. All use of the Safety Connect service is subject to such then-applicable Terms and Conditions.

■ System components

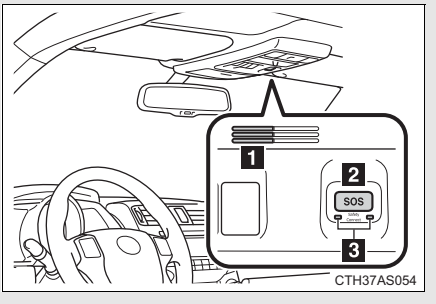

1 Microphone
2 "SOS" button
3 LED light indicators

*: If equipped

■ **Services**

Subscribers have the following Safety Connect services available:

- Automatic Collision Notification*
  Helps drivers receive necessary response from emergency service providers. (→P. 472)

  *: U.S. Patent No. 7,508,298 B2

- Stolen Vehicle Location
  Helps drivers in the event of vehicle theft. (→P. 473)

- Emergency Assistance Button (SOS)
  Connects drivers to response-center support. (→P. 473)

- Enhanced Roadside Assistance
  Provides drivers various on-road assistance. (→P. 473)

■ **Subscription**

After you have signed the Telematics Subscription Service Agreement and are enrolled, you can begin receiving services.
A variety of subscription terms is available for purchase. Contact your Toyota dealer, call 1-800-331-4331, or push the “SOS” button in your vehicle for further subscription details.

■ **Safety Connect Services Information**

- Phone calls using the vehicles Bluetooth® technology will not be possible during Safety Connect.
- Safety Connect is available beginning Fall 2009 on select Toyota models. Contact with the Safety Connect response center is dependent upon the telematics device being in operative condition, cellular connection availability, and GPS satellite signal reception, which can limit the ability to reach the response center or receive emergency service support. Enrollment and Telematics Subscription Service Agreement required. A variety of subscription terms is available; charges vary by subscription term selected.
- Safety Connect services will function in the United States, including Hawaii and Alaska, and in Canada. The services will not function outside of the United States in countries other than Canada. For details about the service, contact your Toyota dealer.
- Safety Connect services are not subject to section 255 of the Telecommunications Act and the device is not TTY compatible.

■ **Languages**

The Safety Connect response center will offer support in multiple languages. The Safety Connect system will offer voice prompts in English and Spanish. Please indicate your language of choice when enrolling.

■ **When contacting the response center**

You may be unable to contact the response center if the network is busy.

Safety Connect LED light Indicators

When the “ENGINE START STOP” switch is turned to IGNITION ON mode (vehicles with a smart key system) or the engine switch is turned to the “ON” position (vehicles without a smart key system), the red indicator light comes on for 2 seconds then turns off. Afterward, the green indicator light comes on, indicating that the service is active.
The following indicator light patterns indicate specific system usage conditions:

- Green indicator light on = Active service
- Green indicator light flashing = Safety Connect call in process
- Red indicator light (except at vehicle start-up) = System malfunction (contact your Toyota dealer)
- No indicator light (off) = Safety Connect service not active

Safety Connect services

Automatic Collision Notification

In case of either airbag deployment or severe rear-end collision, the system is designed to automatically call the response center. The responding agent receives the vehicle’s location and attempts to speak with the vehicle occupants to assess the level of emergency. If the occupants are unable to communicate, the agent automatically treats the call as an emergency, contacts the nearest emergency services provider to describe the situation, and requests that assistance be sent to the location.

Stolen Vehicle Location

If your vehicle is stolen, Safety Connect can work with local authorities to assist them in locating and recovering the vehicle. After filing a police report, call the Safety Connect response center at 1-800-331-4331 and follow the prompts for Safety Connect to initiate this service.

In addition to assisting law enforcement with recovery of a stolen vehicle, Safety-Connect-equipped vehicle location data may, under certain circumstances, be shared with third parties to locate your vehicle. Further information is available at Toyota.com.

Emergency Assistance Button (“SOS”)

In the event of an emergency on the road, push the “SOS” button to reach the Safety Connect response center. The answering agent will determine your vehicle’s location, assess the emergency, and dispatch the necessary assistance required.

If you accidentally press the “SOS” button, tell the response-center agent that you are not experiencing an emergency.

Enhanced Roadside Assistance

Enhanced Roadside Assistance adds GPS data to the already included warranty-based Toyota roadside service.

Subscribers can press the “SOS” button to reach a Safety Connect response-center agent, who can help with a wide range of needs, such as: towing, flat tire, fuel delivery, etc. For a description of the Enhanced Roadside Assistance services and their limitations, please see the Safety Connect Terms and Conditions, which are available at Toyota.com.

Safety information for Safety Connect

Important! Read this information before using Safety Connect.

Exposure to radio frequency signals

The Safety Connect system installed in your vehicle is a low-power radio transmitter and receiver. It receives and also sends out radio frequency (RF) signals.

In August 1996, the Federal Communications Commission (FCC) adopted RF exposure guidelines with safety levels for mobile wireless phones. Those guidelines are consistent with the safety standards previously set by the following U.S. and international standards bodies.

- ANSI (American National Standards Institute) C95.1 [1992]
- NCRP (National Council on Radiation Protection and Measurement) Report 86 [1986]
- ICNIRP (International Commission on Non-Ionizing Radiation Protection) [1996]

Those standards were based on comprehensive and periodic evaluations of the relevant scientific literature. Over 120 scientists, engineers, and physicians from universities, and government health agencies and industries reviewed the available body of research to develop the ANSI Standard (C95.1).

The design of Safety Connect complies with the FCC guidelines in addition to those standards.

License

Licensed by QUALCOMM Incorporated under one or more of the following United States Patents and/or their counterparts in other nations:

4,901,307 5,490,165 5,056,109 5,504,773 5,101,501
5,506,865 5,109,390 5,511,073 5,228,054 5,535,239
5,267,261 5,544,196 5,267,262 5,568,483 5,337,338
5,600,754 5,414,796 5,657,420 5,416,797 5,659,569
5,710,784 5,778,338

Certification for Safety Connect

FCC ID: O9EGTM1

FCC ID: O6Y-CDMRF101

NOTE:
This device complies with Part 15 of the FCC Rules. Operation is subject to the following two conditions: (1) This device may not cause harmful interference, and (2) this device must accept any interference received, including interference that may cause undesired operation.

FCC WARNING:

Changes or modifications not expressly approved by the party responsible for compliance could void the user's authority to operate the equipment.

Maintenance and care

4

4-1. Maintenance and care

Cleaning and protecting the vehicle exterior..... 478

Cleaning and protecting the vehicle interior..... 481

4-2. Maintenance

Maintenance requirements..... 484

General maintenance..... 486

Emission inspection and maintenance (I/M) programs..... 490

4-3. Do-it-yourself maintenance

Do-it-yourself service precautions 491

Hood 494

Engine compartment..... 495

Tires 514

Tire inflation pressure 520

Wheels 524

Air conditioning filter..... 526

Wireless remote control/ electronic key battery..... 528

Checking and replacing fuses 531

Light bulbs..... 541

Cleaning and protecting the vehicle exterior

Perform the following to protect the vehicle and maintain it in prime condition:

- Working from top to bottom, liberally apply water to the vehicle body, wheel wells and underside of the vehicle to remove any dirt and dust.
- Wash the vehicle body using a sponge or soft cloth, such as a chamois.
- For hard-to-remove marks, use car wash soap and rinse thoroughly with water.
- Wipe away any water.
- Wax the vehicle when the waterproof coating deteriorates.

  If water does not bead on a clean surface, apply wax when the vehicle body is cool.

Automatic car washes

- Fold the mirrors and remove the detachable pole antenna before washing the vehicle. Start washing from the front of the vehicle. Make sure to re-install the antenna and extend the mirrors before driving.
- Brushes used in automatic car washes may scratch the vehicle surface and harm your vehicle's paint.
- In certain automatic car washes, the roof antenna (if equipped) or rear spoiler may interfere with machine operation. This may prevent the vehicle from being cleaned properly or result in damage to the antenna or rear spoiler.

High pressure car washes

- Do not allow the nozzles of the car wash to come within close proximity of the windows.
- Before using the car wash, check that the fuel filler door on your vehicle is closed properly.

Aluminum wheels (if equipped)

- Remove any dirt immediately by using a neutral detergent. Do not use hard brushes or abrasive cleaners. Do not use strong or harsh chemical cleaners. Use the same mild detergent and wax as used on the paint.
- Do not use detergent on the wheels when they are hot, for example after driving for long distance in the hot weather.
- Wash detergent from the wheels immediately after use.

Bumpers and side moldings

Do not scrub with abrasive cleaners.

CAUTION

When washing the vehicle

Do not apply water to the inside of the engine compartment. Doing so may cause the electrical components etc. to catch fire.

Precautions regarding the exhaust pipe

Exhaust gasses cause the exhaust pipe to become quite hot.
When washing the vehicle, be careful not to touch the pipe until it has cooled sufficiently, as touching a hot exhaust pipe can cause burns.

NOTICE

■ **To prevent paint deterioration and corrosion on the body and components (aluminum wheels etc.)**

● Wash the vehicle immediately in the following cases:

- After driving near the sea coast
- After driving on salted roads
- If coal tar or tree sap is present on the paint surface
- If dead insects, insect droppings or bird droppings are present on the paint surface
- After driving in an area contaminated with soot, oily smoke, mine dust, iron powder or chemical substances
- If the vehicle becomes heavily soiled with dust or mud
- If liquids such as benzene and gasoline are spilled on the paint surface

● If the paint is chipped or scratched, have it repaired immediately.

● To prevent the wheels from corroding, remove any dirt and store in a place with low humidity when storing the wheels.

■ **Cleaning the exterior lights**

● Wash carefully. Do not use organic substances or scrub with a hard brush. This may damage the surfaces of the lights.

● Do not apply wax on the surfaces of the lights.
Wax may cause damage to the lenses.

■ **Detachable pole antenna installation and removal precautions**

● Before driving, ensure that the antenna is installed.

● When the antenna is removed, such as before entering an automatic car wash, make sure to store it in a suitable place so as not to lose it. Also, before driving, make sure to reinstall the antenna in its original position.

■ **High pressure car washes (vehicles with rear view monitor system)**

When washing the vehicle, do not apply intensive bursts of water to the camera or camera area. Doing so may result in the camera malfunctioning.

Cleaning and protecting the vehicle interior

The following procedures will help protect your vehicle's interior and keep it in top condition:

Protecting the vehicle interior

Remove dirt and dust using a vacuum cleaner. Wipe dirty surfaces with a cloth dampened with lukewarm water.

Cleaning the leather areas

- Remove dirt and dust using a vacuum cleaner.
- Wipe off any excess dirt and dust with a soft cloth dampened with diluted detergent.

  Use a diluted water solution of approximately 5% neutral wool detergent.
- Wring out any excess water from the cloth and thoroughly wipe off all remaining traces of detergent.
- Wipe the surface with a dry, soft cloth to remove any remaining moisture. Allow the leather to dry in a shaded and ventilated area.

Cleaning the synthetic leather areas

- Remove loose dirt using a vacuum cleaner.
- Apply a mild soap solution to the synthetic leather using a sponge or soft cloth.
- Allow the solution to soak in for a few minutes. Remove the dirt and wipe off the solution with a clean, damp cloth.

Caring for leather areas

Toyota recommends cleaning the interior of the vehicle at least twice a year to maintain the quality of the vehicle's interior.

Shampooing the carpets

There are several commercial foaming-type cleaners available. Use a sponge or brush to apply the foam. Rub in overlapping circles. Do not use water. Wipe dirty surfaces and let them dry. Excellent results are obtained by keeping the carpet as dry as possible.

Seat belts

Clean with mild soap and lukewarm water using a cloth or sponge. Also check the belts periodically for excessive wear, fraying or cuts.

CAUTION

Water in the vehicle

- Do not splash or spill liquid in the vehicle.
  Doing so may cause electrical components etc. to malfunction or catch fire.
- Do not get any of the SRS components or wiring in the vehicle interior wet. (→P. 115)
  An electrical malfunction may cause the airbags to deploy or not function properly, resulting in death or serious injury.

Cleaning the interior (especially instrument panel)

Do not use polish wax or polish cleaner. The instrument panel may reflect off the windshield, obstructing the driver's view and leading to an accident, resulting in death or serious injury.

NOTICE

Cleaning detergents

- Do not use the following types of detergent, as they may discolor the vehicle interior or cause streaks or damage to painted surfaces:
  - Non-seat portions: Organic substances such as benzene or gasoline, alkaline or acidic solutions, dye, and bleach.
  - Seats: Alkaline or acidic solutions, such as thinner, benzene, and alcohol.
- Do not use polish wax or polish cleaner. The instrument panel's or other interior part's painted surface may be damaged.

Preventing damage to leather surfaces

Observe the following precautions to avoid damage to and deterioration of leather surfaces:

- Remove any dust or dirt from leather surfaces immediately.
- Do not expose the vehicle to direct sunlight for extended periods of time. Park the vehicle in the shade, especially during summer.
- Do not place items made of vinyl, plastic, or containing wax on the upholstery, as they may stick to the leather surface if the vehicle interior heats up significantly.

Water on the floor

Do not wash the vehicle floor with water.
Vehicle systems such as the audio system may be damaged if water comes into contact with electrical components such as the audio system above or under the floor of the vehicle. Water may also cause the body to rust.

Cleaning the inside of the back window

- Do not use glass cleaner to clean the back window, as this may cause damage to the rear window defogger heater wires. Use a cloth dampened with lukewarm water to gently wipe the window clean. Wipe the window in strokes running parallel to the heater wires.
- Be careful not to scratch or damage the heater wires.

Maintenance requirements

To ensure safe and economical driving, day-to-day care and regular maintenance are essential. It is the owner's responsibility to perform regular checks. Toyota recommends performing the following maintenance:

General maintenance

General maintenance should be performed on a daily basis. This can be done by yourself or by a Toyota dealer.

Scheduled maintenance

Scheduled maintenance should be performed at specified intervals according to the maintenance schedule.

For details about maintenance items and schedules, refer to the "Scheduled Maintenance Guide" or "Owner's Manual Supplement".

Do-it-yourself maintenance

You can perform some maintenance procedures by yourself. Please be aware that do-it-yourself maintenance may affect warranty coverage.

The use of Toyota Repair Manuals is recommended.

For details about warranty coverage, see the separate "Owner's Warranty Information Booklet" or "Owner's Manual Supplement".

Repair and replacement

It is recommended that genuine Toyota parts be used for repairs to ensure performance of each system. If non-Toyota parts are used in replacement or if a repair shop other than a Toyota dealer performs repairs, confirm the warranty coverage.

Allow inspection and repairs to be performed by a Toyota dealer

- Toyota technicians are well-trained specialists and are kept up to date with the latest service information. They are well informed about the operations of all systems on your vehicle.
- Keep a copy of the repair order. It proves that the maintenance that has been performed is under warranty coverage. If any problem should arise while your vehicle is under warranty, your Toyota dealer will promptly take care of it.

CAUTION

If your vehicle is not properly maintained

Improper maintenance could result in serious damage to the vehicle and possible serious injury or death.

Handling of the battery

- Engine exhaust, some of its constituents, and a wide variety of automobile components contain or emit chemicals known to the State of California to cause cancer and birth defects and other reproductive harm. Work in a well ventilated area.
- Oils, fuels and fluids contained in vehicles as well as waste produced by component wear contain or emit chemicals known to the State of California to cause cancer and birth defects or other reproductive harm. Avoid exposure and wash any affected area immediately.
- Battery posts, terminals and related accessories contain lead and lead compounds which are known to cause brain damage. Wash your hands after handling. (→P. 509)

General maintenance

Listed below are the general maintenance items that should be performed at the intervals specified in the “Owner's Warranty Information Booklet” or “Owner’s Manual Supplement/Scheduled Maintenance Guide”. It is recommended that any problem you notice should be brought to the attention of your Toyota dealer or qualified service shop for advice.

Engine compartment

Items	Check points
Battery	Check the connections. (→P. 509)
Brake fluid	Is the brake fluid at the correct level? (→P. 505)
Engine coolant	Is the engine coolant at the correct level? (→P. 503)
Engine oil	Is the engine oil at the correct level? (→P. 498)
Exhaust system	There should not be any fumes or strange sounds.
Power steering fluid	Is the power steering fluid at the correct level? (→P. 507)
Radiator/condenser	The radiator and condenser should be free from foreign objects. (→P. 504)
Washer fluid	Is there sufficient washer fluid? (→P. 512)

Vehicle interior

Items	Check points
Accelerator pedal	• The accelerator pedal should move smoothly (without uneven pedal effort or catching).
Automatic transmission “Park” mechanism	• When parked on a slope and the shift lever is in P, is the vehicle securely stopped?
Brake pedal	• Does the brake pedal move smoothly? • Does the brake pedal have appropriate clearance from the floor? • Does the brake pedal have the correct amount of free play?
Brakes	• The vehicle should not pull to one side when the brakes are applied. • The brakes should work effectively. • The brake pedal should not feel spongy. • The brake pedal should not get too close to the floor when the brakes are applied.
Head restraints	• Do the head restraints move smoothly and lock securely?
Indicators/buzzers	• Do the indicators and buzzers function properly?
Lights	• Do all the lights come on?

Items	Check points
Parking brake	• Does the parking brake pedal move smoothly? • When parked on a slope and the parking brake is on, is the vehicle securely stopped?
Seat belts	• Do the seat belts operate smoothly? • The seat belts should not be damaged.
Seats	• Do the seat controls operate properly?
Steering wheel	• Does the steering wheel rotate smoothly? • Does the steering wheel have the correct amount of free play? • There should not be any strange sounds coming from the steering wheel.

Vehicle exterior

Items	Check points
Doors	• Do the doors operate smoothly?
Engine hood	• Does the engine hood lock system work properly?
Fluid leaks	• There should not be any signs of fluid leakage after the vehicle has been parked.
Tires	• Is the tire inflation pressure correct? • The tires should not be damaged or excessively worn. • Have the tires been rotated according to the maintenance schedule? • The wheel nuts should not be loose.

CAUTION

If the engine is running

Turn the engine off and ensure that there is adequate ventilation before performing maintenance checks.

Emission inspection and maintenance (I/M) programs

Some states have vehicle emission inspection programs which include OBD (On Board Diagnostics) checks. The OBD system monitors the operation of the emission control system.

■ If the malfunction indicator lamp comes on

The OBD system determines that a problem exists somewhere in the emission control system. Your vehicle may not pass the I/M test and may need to be repaired. Contact your Toyota dealer to service the vehicle.

■ Your vehicle may not pass the I/M test in the following situations:

- When the battery is disconnected or discharged

  Readiness codes that are set during ordinary driving are erased.
  Also, depending on your driving habits, the readiness codes may not be completely set.

- When the fuel tank cap is loose

  The malfunction indicator lamp comes on indicating a temporary malfunction and your vehicle may not pass the I/M test.

■ When the malfunction indicator lamp still remains on after several driving trips

The error code in the OBD system will not be cleared unless the vehicle is driven 40 or more times.

■ If your vehicle does not pass the I/M test

Contact your Toyota dealer to prepare the vehicle for re-testing.

Do-it-yourself service precautions

If you perform maintenance by yourself, be sure to follow the correct procedure as given in these sections.

Items	Parts and tools
Battery condition (→P. 509)	• Warm water • Baking soda • Grease • Conventional wrench (for terminal clamp bolts)
Brake fluid level (→P. 505)	• FMVSS No.116 DOT 3 or SAE J1703 brake fluid • Rag or paper towel • Funnel (used only for adding brake fluid)
Engine coolant level (→P. 503)	• “Toyota Super Long Life Coolant” or a similar high quality ethylene glycol based non-silicate, non-amine, non-nitrite and non-borate coolant with long-life hybrid organic acid technology For the U.S.A.: “Toyota Super Long Life Coolant” is pre-mixed with 50% coolant and 50% deionized water. For Canada: “Toyota Super Long Life Coolant” is pre-mixed with 55% coolant and 45% deionized water. • Funnel (used only for adding engine coolant)
Engine oil level (→P. 498)	• “Toyota Genuine Motor Oil” or equivalent • Rag or paper towel • Funnel (used only for adding engine oil)

Items	Parts and tools
Fuses (→P. 531)	• Fuse with same amperage rating as original
Light bulbs (→P. 541)	• Bulb with same number and wattage rating as original • Phillips-head screwdriver • Flathead screwdriver • Wrench
Power steering fluid level (→P. 507)	• Automatic transmission fluid DEXRON® II or III • Rag or paper towel • Clean funnel
Radiator and condenser (→P. 504)	—
Tire inflation pressure (→P. 520)	• Tire pressure gauge • Compressed air source
Washer fluid (→P. 512)	• Water or washer fluid containing antifreeze (for winter use) • Funnel (used only for adding water or washer fluid)

CAUTION

The engine compartment contains many mechanisms and fluids that may move suddenly, become hot, or become electrically energized. To avoid death or serious injury, observe the following precautions:

When working on the engine compartment:

- Keep hands, clothing and tools away from the moving fan and engine drive belt.
- Be careful not to touch the engine, radiator, exhaust manifold, etc. right after driving as they may be hot. Oil and other fluids may also be hot.
- Do not leave anything that may burn easily, such as paper and rags, in the engine compartment.
- Do not smoke, cause sparks or expose an open flame to fuel or the battery. Fuel and battery fumes are flammable.
- Be extremely cautious when working on the battery. It contains poisonous and corrosive sulfuric acid.

Safety glasses

Wear safety glasses to prevent flying or falling material, fluid spray, etc. from getting in your eyes.

NOTICE

If you remove the air cleaner filter

Driving with the air cleaner filter removed may cause excessive engine wear due to dirt in the air. Also, a backfire could cause a fire in the engine compartment.

Release the lock from the inside of the vehicle to open the hood.

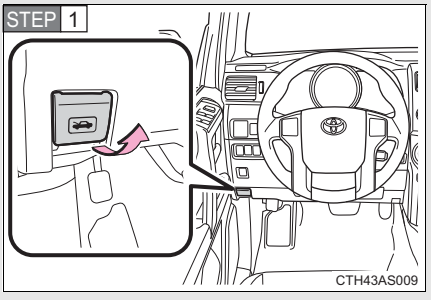

Pull the hood release lever.

The hood will pop up slightly.

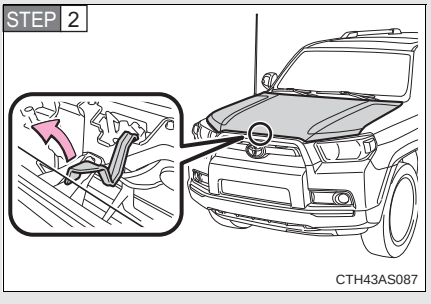

Pull up the auxiliary catch lever and lift the hood.

CAUTION

■ Pre-driving check

Check that the hood is fully closed and locked.
If the hood is not locked properly, it may open while the vehicle is in motion and cause an accident, which may result in death or serious injury.

2.7 L 4-cylinder (2TR-FE) engine

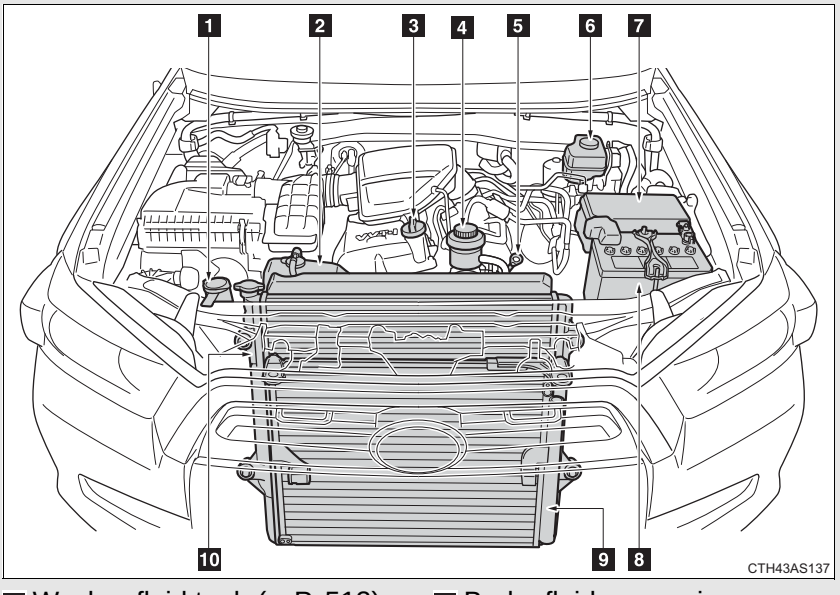

1 Washer fluid tank (→P. 512)
2 Engine coolant reservoir (→P. 503)
3 Engine oil filler cap (→P. 498)
4 Power steering fluid reservoir (→P. 507)
5 Engine oil level dipstick (→P. 498)
6 Brake fluid reservoir (→P. 505)
7 Fuse box (→P. 531)
8 Battery (→P. 509)
9 Condenser (→P. 504)
10 Radiator (→P. 504)

4.0 L V6 (1GR-FE) engine

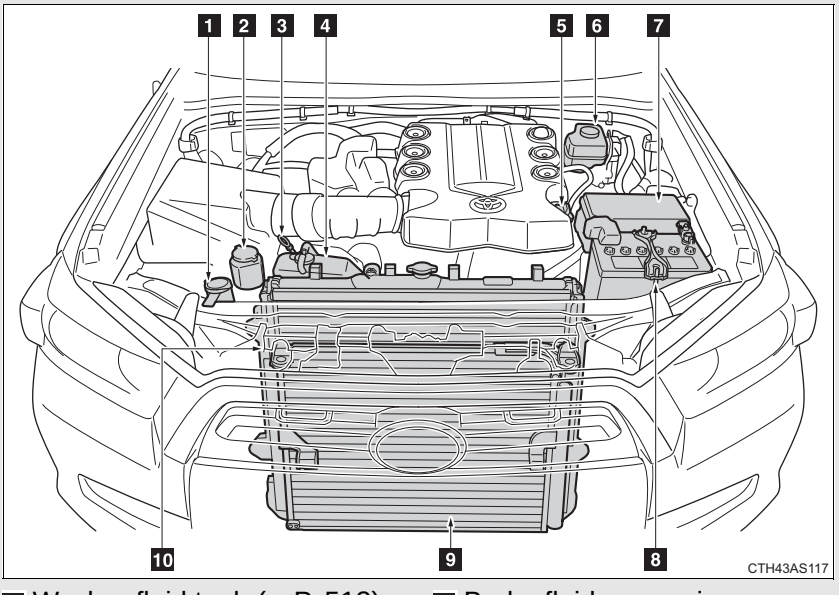

1 Washer fluid tank (→P. 512)

2 Power steering fluid reservoir (→P. 507)

3 Engine oil level dipstick (→P. 498)

4 Engine coolant reservoir (→P. 503)

5 Engine oil filler cap (→P. 498)

6 Brake fluid reservoir (→P. 505)

7 Fuse box (→P. 531)

8 Battery (→P. 509)

9 Condenser (→P. 504)

10 Radiator (→P. 504)

Engine compartment cover

■ Removing the engine compartment cover

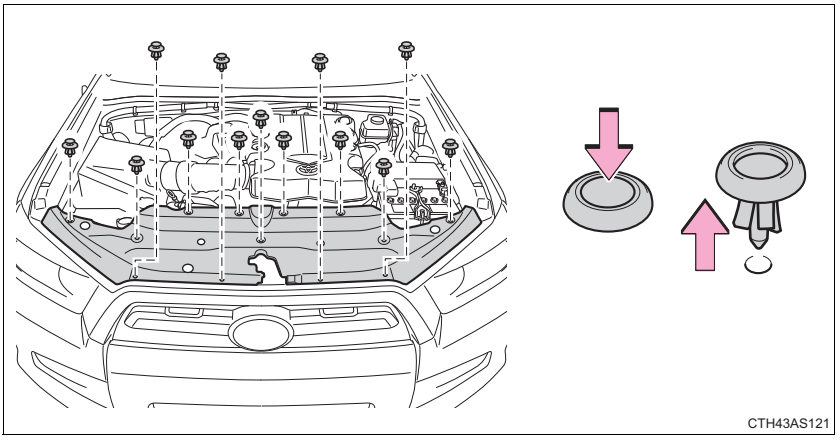

■ Installing the clips

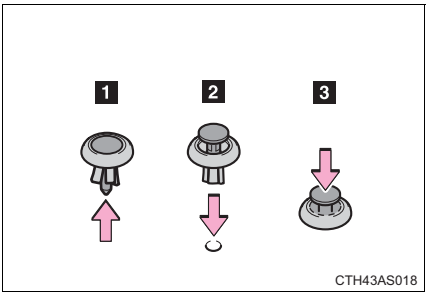

Engine oil

With the engine at operating temperature and turned off, check the oil level on the dipstick.

■ Checking the engine oil

STEP 1 Park the vehicle on level ground. After turning off the engine, wait more than 5 minutes for the oil to drain back into the bottom of the engine.

STEP 2 Holding a rag under the end, pull the dipstick out.

2.7 L 4-cylinder (2TR-FE) engine

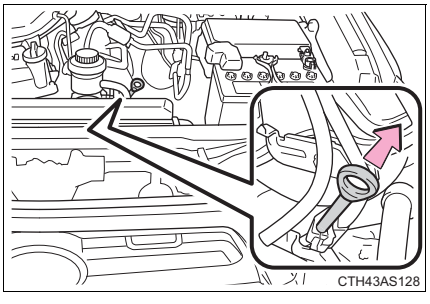

4.0 L V6 (1GR-FE) engine

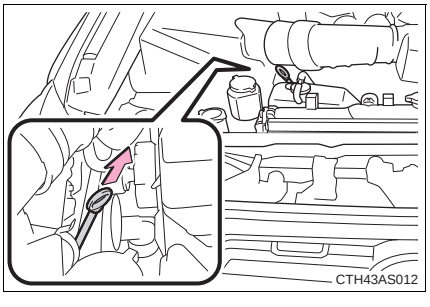

STEP 3 Wipe the dipstick clean.

STEP 4 Reinsert the dipstick fully.

STEP 5 Holding a rag under the end, pull the dipstick out and check the oil level.

STEP 6 Wipe the dipstick and reinsert it fully.

2.7 L 4-cylinder (2TR-FE) engine

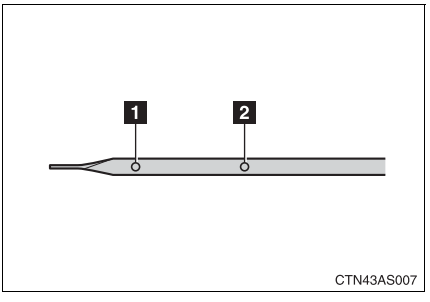

1 Low

2 Full

4.0 L V6 (1GR-FE) engine

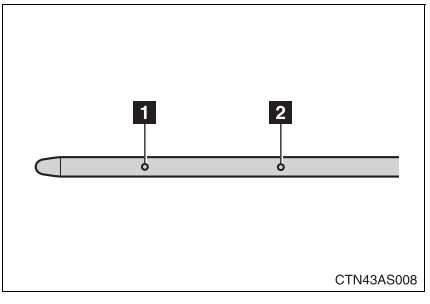

1 Low

2 Full

■ Adding engine oil

2.7 L 4-cylinder (2TR-FE) engine

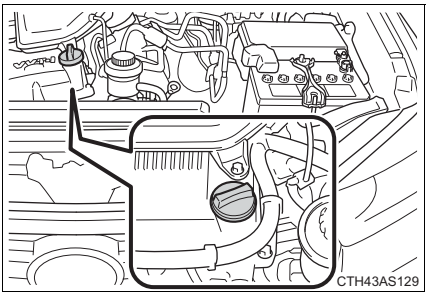

If the oil level is below or near the low level mark, add engine oil of the same type as that already in the engine.

4.0 L V6 (1GR-FE) engine

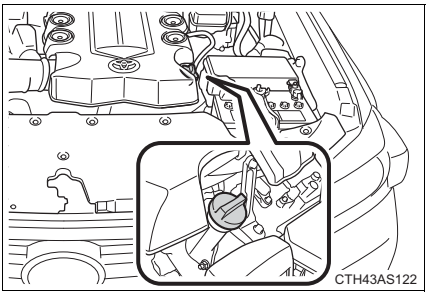

If the oil level is below or near the low level mark, add engine oil of the same type as that already in the engine.

Make sure to check the oil type and prepare the items needed before adding oil.

Engine oil selection	→P. 616
Oil quantity (Low → Full)	**2.7 L 4-cylinder (2TR-FE) engine** 1.6 qt. (1.5 L, 1.3 Imp. qt.) **4.0 L V6 (1GR-FE) engine** 1.8 qt. (1.7 L, 1.5 Imp. qt.)
Items	Clean funnel

STEP 1 Remove the oil filler cap by turning it counterclockwise.

STEP 2 Add engine oil slowly, checking the dipstick.

STEP 3 Install the oil filler cap by turning it clockwise.

Engine oil consumption

- The amount of engine oil consumed depends on the oil viscosity, the quality of the oil and the way the vehicle is driven.
- More oil is consumed under driving conditions such as high speeds and frequent acceleration and deceleration.
- A new engine consumes more oil.
- When judging the amount of oil consumption, keep in mind that the oil may have become diluted, making it difficult to judge the true level accurately.
- Oil consumption: Max. 1.1 qt./600 miles (0.9 Imp. qt./600 miles, 1.0 L/1000 km)
- If your vehicle consumes more than 1.1 qt. (1.0 L, 0.9 Imp. qt.) every 600 miles (1000 km), contact your Toyota dealer.

After changing the engine oil (U.S.A. only)

The engine oil maintenance data should be reset. Perform the following procedures:

STEP 1 Switch the display to the trip meter A (→P. 184) when the engine is running.

STEP 2 **Vehicles without a smart key system**

Turn the engine switch off.

Vehicles with a smart key system

Turn the “ENGINE START STOP” switch off.

STEP 3 **Vehicles without a smart key system**

While pressing the trip meter reset button (→P. 184), turn the engine switch to the “ON” position (do not start the engine because reset mode will be canceled). Continue to press and hold the button until the trip meter displays “000000”.

Vehicles with a smart key system

While pressing the trip meter reset button (→P. 184), turn the “ENGINE START STOP” switch to the IGNITION ON mode (do not start the engine because otherwise the reset mode will be canceled). Continue to press and hold the button until the trip meter displays “000000”.

CAUTION

Used engine oil

- Used engine oil contains potentially harmful contaminants which may cause skin disorders such as inflammation and skin cancer, so care should be taken to avoid prolonged and repeated contact. To remove used engine oil from your skin, wash thoroughly with soap and water.
- Dispose of used oil and filters only in a safe and acceptable manner. Do not dispose of used oil and filters in household trash, in sewers or onto the ground. Call your Toyota dealer, service station or auto parts store for information concerning recycling or disposal.
- Do not leave used engine oil within the reach of children.

NOTICE

To prevent serious engine damage

Check the oil level on a regular basis.

When replacing the engine oil

- Be careful not to spill engine oil on the vehicle components.
- Avoid overfilling, or the engine could be damaged.
- Check the oil level on the dipstick every time you refill the vehicle.
- Be sure the engine oil filler cap is properly tightened.

Engine coolant

The coolant level is satisfactory if it is between the “F” and “L” lines on the reservoir when the engine is cold.

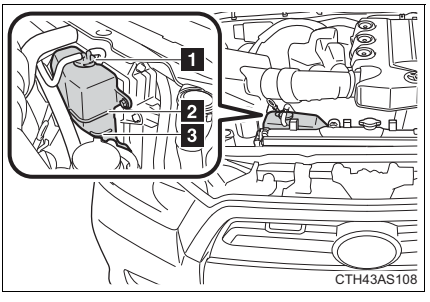

1 Reservoir cap

2 “F” line

3 “L” line

If the level is on or below the “L” line, add coolant up to the “F” line. (→P. 604)

Coolant selection

Only use “Toyota Super Long Life Coolant” or a similar high quality ethylene glycol based non-silicate, non-amine, non-nitrite, and non-borate coolant with long-life hybrid organic acid technology.

U.S.A.: “Toyota Super Long Life Coolant” is a mixture of 50% coolant and 50% deionized water. (Minimum temperature: -31°F [-35°C])

Canada: “Toyota Super Long Life Coolant” is a mixture of 55% coolant and 45% deionized water. (Minimum temperature: -44°F [-42°C])

For more details about engine coolant, contact your Toyota dealer.

If the coolant level drops within a short time of replenishing

Visually check the radiator, hoses, engine coolant reservoir caps, drain cock and water pump.
If you cannot find a leak, have your Toyota dealer test the cap and check for leaks in the cooling system.

CAUTION

When the engine is hot

Do not remove the engine coolant reservoir cap.
The cooling system may be under pressure and may spray hot coolant if the cap is removed, causing burns or other injuries.

NOTICE

When adding coolant

Coolant is neither plain water nor straight antifreeze. The correct mixture of water and antifreeze must be used to provide proper lubrication, corrosion protection and cooling. Be sure to read the antifreeze or coolant label.

If you spill coolant

Be sure to wash it off with water to prevent it from damaging parts or paint.

Radiator and condenser

Check the radiator and condenser and clear away any foreign objects.
If either of the above parts is extremely dirty or you are not sure of their condition, have your vehicle inspected by your Toyota dealer.

CAUTION

When the engine is hot

Do not touch the radiator or condenser as they may be hot and cause burns.

Brake fluid

■ Checking fluid level

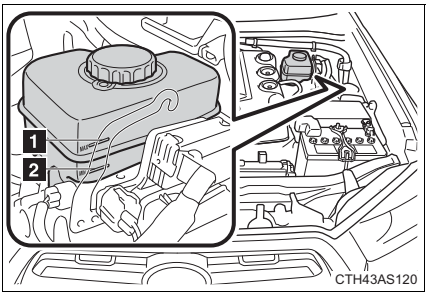

The brake fluid level should be between the “MAX” and “MIN” lines on the tank.

1 MAX

2 MIN

■ Adding fluid

Make sure to check the fluid type and prepare the necessary item.

Fluid type	FMVSS No.116 DOT 3 or SAE J1703 brake fluid
Item	Clean funnel

■ Refilling brake fluid

STEP 1 **Vehicles without a smart key system**

Turn the engine switch off.

Vehicles with a smart key system

Turn the “ENGINE START STOP” switch off.

STEP 2 Depress the brake pedal more than 40 times.

STEP 3 Remove the reservoir cap by hand. Add brake fluid up to the “MAX” line.

If you do not follow the procedure above, the reservoir may overflow.

Brake fluid can absorb moisture from the air

Excess moisture in the brake fluid can cause a dangerous loss of braking efficiency. Use only newly opened brake fluid.

CAUTION

When filling the reservoir

Take care as brake fluid can harm your hands and eyes and damage painted surfaces.
If fluid gets on your hands or in your eyes, flush the affected area with clean water immediately.

If you still experience discomfort, see a doctor.

NOTICE

If the fluid level is low or high

It is normal for the brake fluid level to go down slightly as the brake pads wear out or when the fluid level in the accumulator is high.
If the reservoir needs frequent refilling, there may be a serious problem.

Power steering fluid

Fluid level

The fluid level should be within the appropriate range.

2.7 L 4-cylinder (2TR-FE) engine

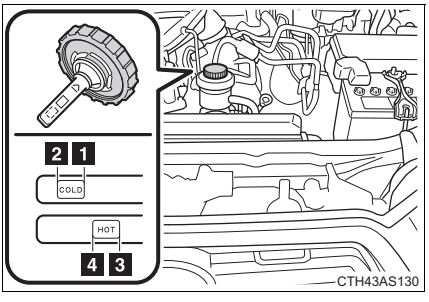

1 Full (when cold)
2 Add fluid (when cold)
3 Full (when hot)
4 Add fluid (when hot)

4.0 L V6 (1GR-FE) engine

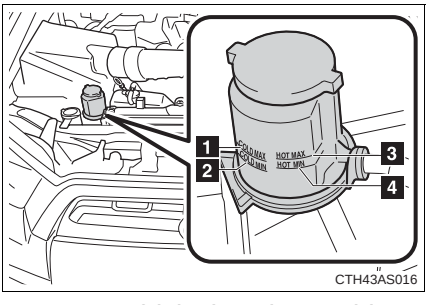

1 Full (when cold)
2 Add fluid (when cold)
3 Full (when hot)
4 Add fluid (when hot)

Hot: Vehicle has been driven around 50 mph (80 km/h) for 20 minutes, or slightly longer in frigid temperatures. (Fluid temperature, 140°F - 175°F [60°C - 80°C]).

Cold: Engine has not been run for about 5 hours. (Room temperature, 50°F - 85°F [10°C - 30°C]).

Checking the fluid level

Make sure to check the fluid type and prepare the necessary items.

Fluid type	Automatic transmission fluid DEXRON® II or III
Items	Rag or paper, clean funnel (only for adding fluid)

STEP 1 Clean all dirt off the reservoir.

STEP 2 Remove the cap by turning it counterclockwise.

STEP 3 Wipe the dipstick clean.

STEP 4 Reinstall the cap and remove it again.

STEP 5 Check the fluid level.

CAUTION

When checking the reservoir

Take care as the reservoir may be hot.

NOTICE

When adding fluid

Avoid overfilling, or the power steering may be damaged.

After replacing the reservoir cap

Check the steering box case, vane pump and hose connections for leaks or damage.

Battery

Check the battery as follows:

Make sure that the battery terminals are not corroded and that there are no loose connections, cracks, or loose clamps.

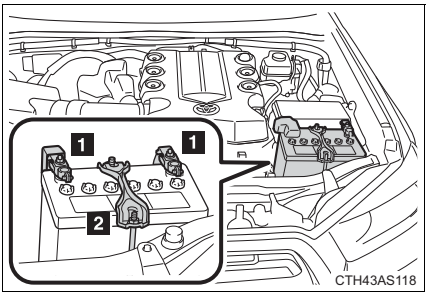

1 Terminals

2 Hold-down clamp

Before recharging

When recharging, the battery produces hydrogen gas which is flammable and explosive. Therefore, observe the following before recharging:

- If recharging with the battery installed on the vehicle, be sure to disconnect the ground cable.
- Make sure the power switch on the charger is off when connecting and disconnecting the charger cables to the battery.

After recharging/reconnecting the battery (vehicles with smart key system)

- Unlocking the doors using the smart key system may not be possible immediately after reconnecting the battery. If this happens, use the wireless remote control or the mechanical key to lock/unlock the doors.
- Start the engine with the “ENGINE START STOP” switch in ACCESSORY mode. The engine may not start with the “ENGINE START STOP” switch turned OFF. However, the engine will operate normally from the second attempt.
- The “ENGINE START STOP” switch mode is recorded by the vehicle. If the battery is reconnected, the vehicle will return the “ENGINE START STOP” switch mode to the status it was in before the battery was disconnected. Make sure to turn off the engine before disconnect the battery. Take extra care when connecting the battery if the “ENGINE START STOP” switch mode prior to discharge is unknown.

If the system will not start even after multiple attempts, contact your Toyota dealer.

CAUTION

Chemicals in the battery

Batteries contain poisonous and corrosive sulfuric acid and may produce hydrogen gas which is flammable and explosive. To reduce the risk of death or serious injury, take the following precautions while working on or near the battery:

- Do not cause sparks by touching the battery terminals with tools.
- Do not smoke or light a match near the battery.
- Avoid contact with eyes, skin and clothes.
- Never inhale or swallow electrolyte.
- Wear protective safety glasses when working near the battery.
- Keep children away from the battery.

CAUTION

Where to safely charge the battery

Always charge the battery in an open area. Do not charge the battery in a garage or closed room where there is insufficient ventilation.

How to recharge the battery

Only perform a slow charge (5 A or less). The battery may explode if charged at a quicker rate.

Emergency measures regarding electrolyte

- If electrolyte gets in your eyes
  Flush your eyes with clean water for at least 15 minutes and get immediate medical attention. If possible, continue to apply water with a sponge or cloth while traveling to the nearest medical facility.
- If electrolyte gets on your skin
  Wash the affected area thoroughly. If you feel pain or burning, get medical attention immediately.
- If electrolyte gets on your clothes
  It can soak through clothing on to your skin. Immediately take off the clothing and follow the procedure above if necessary.
- If you accidentally swallow electrolyte
  Drink a large quantity of water or milk. Get emergency medical attention immediately.

NOTICE

When recharging the battery

Never recharge the battery while the engine is running. Also, be sure all accessories are turned off.

Washer fluid

Type A

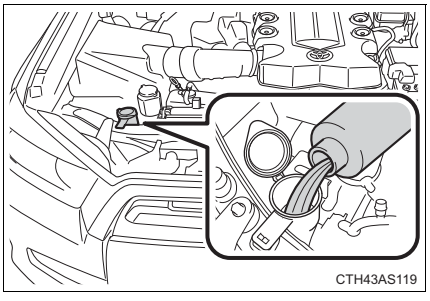

If any washer does not work or the low washer fluid warning light comes on, the washer tank may be empty. Add washer fluid.

Type B

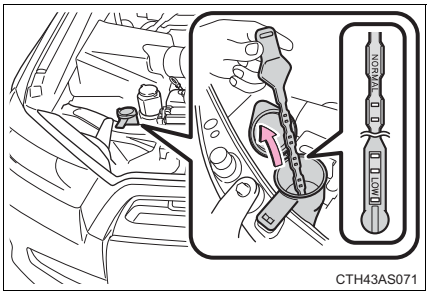

If the washer fluid level is at “LOW”, add washer fluid.

■Using the gauge (Type B only)

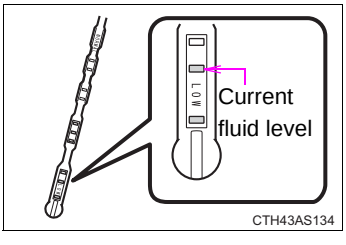

The washer fluid level can be checked by observing the position of the level on the liquid-covered holes in the gauge.
If the level falls below the second hole from the bottom (the “LOW” position), refill the washer fluid.

CAUTION

When adding washer fluid

Do not add washer fluid when the engine is hot or running as washer fluid contains alcohol and may catch fire if spilled on the engine etc.

NOTICE

Do not use any fluid other than washer fluid

Do not use soapy water or engine antifreeze instead of washer fluid.
Doing so may cause streaking on the vehicle's painted surfaces.

Diluting washer fluid

Dilute washer fluid with water as necessary.
Refer to the freezing temperatures listed on the washer fluid tank.

Replace or rotate tires in accordance with maintenance schedules and treadwear.

Checking tires

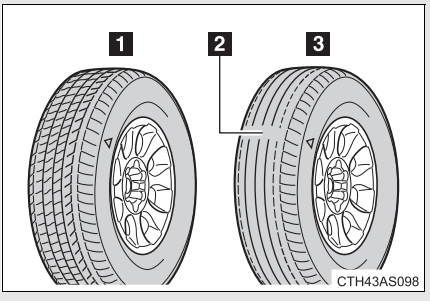

1 New tread

2 Treadwear indicator

3 Worn tread

The location of treadwear indicators is shown by the "TWI" or "Δ" marks, etc., molded on the sidewall of each tire.

Check spare tire condition and pressure if not rotated.

Tire rotation

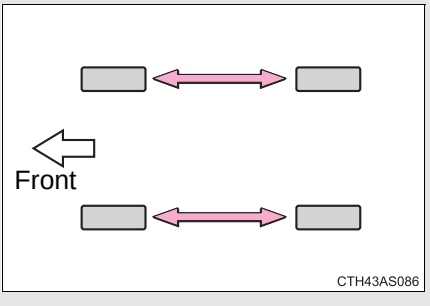

Rotate the tires in the order shown.

To equalize tire wear and extend tire life, Toyota recommends that tire rotation is carried out at the same interval as tire inspection.

Tire pressure warning system

Your vehicle is equipped with a tire pressure warning system that uses tire pressure warning valves and transmitters to detect low tire inflation pressure before serious problems arise.
(→P. 567)

Installing tire pressure warning valves and transmitters

When replacing tires or wheels, tire pressure warning valves and transmitters must also be installed.

When new tire pressure warning valves and transmitters are installed, new tire pressure warning valve and transmitter ID codes must be registered in the tire pressure warning computer and the tire pressure warning system must be initialized. Have tire pressure warning valve and transmitter ID codes registered by your Toyota dealer. (→P. 515)

Registering ID codes

The tire pressure warning valve and transmitter is equipped with a unique ID code. When replacing a tire pressure warning valve and transmitter, it is necessary to register the ID code of tire pressure warning valve and transmitter. Have the ID code registered by your Toyota dealer.

■When to replace your vehicle's tires

Tires should be replaced if:

- You have tire damage such as cuts, splits, cracks deep enough to expose the fabric, and bulges indicating internal damage
- A tire goes flat repeatedly or cannot be properly repaired due to the size or location of a cut or other damage

If you are not sure, consult with your Toyota dealer.

■Replacing tires and wheels

If the ID code of the tire pressure warning valve and transmitter is not registered, the tire pressure warning system will not work properly. After driving for about 20 minutes, the tire pressure warning light comes on after blinking for 1 minute to indicate a system malfunction.

■Tire life

Any tire over 6 years old must be checked by a qualified technician even if they have seldom or never been used or damage is not obvious.

■Routine tire inflation pressure checks

The tire pressure warning system does not replace routine tire inflation pressure checks. Make sure to check tire inflation pressure as part of your routine of daily vehicle checks.

■Maximum load of tire

Check that the number given by dividing the maximum load by 1.10 of the replacement tire is greater than 1/2 of the Gross Axle Weight Ratings (GAWR) of either the front axle or the rear axle, whichever is greater.

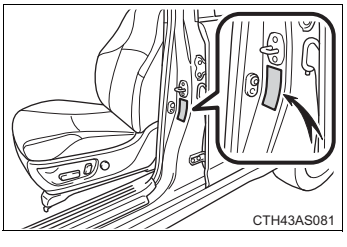

For the GAWR, see the Certification Label. For the maximum load of the tire, see the load limit at maximum cold tire inflation pressure mentioned on the sidewall of the tire. (→P. 628)

■Tire types

● Summer tires

Summer tires are high-speed performance tires best suited to highway driving under dry conditions. Since summer tires do not have the same traction performance as snow tires, summer tires are inadequate for driving on snow-covered or icy roads. For driving on snow-covered roads or icy roads, the use of snow tires is recommended. When installing snow tires, be sure to replace all four tires.

● All season tires

All season tires are designed to provide better traction in snow and to be adequate for driving in most winter conditions as well as for use year-round. All season tires, however, do not have adequate traction performance compared with snow tires in heavy or loose snow. Also, all season tires fall short in acceleration and handling performance compared with summer tires in highway driving.

● Snow tires

For driving on snow-covered roads or icy roads, we recommend using snow tires. If you need snow tires, select tires of the same size, construction and load capacity as the originally installed tires. Since your vehicle has radial tires as original equipment, make sure your snow tires also have radial construction. Do not install studded tires without first checking local regulations for possible restrictions. Snow tires should be installed on all wheels. (→P. 275)

■If the tread on snow tires wears down below 0.16 in. (4 mm)

The effectiveness of the tires as snow tires is lost.

Tire pressure warning system certification

FCC ID: PAXPMV107J
FCC ID: HYQ13BCX

For vehicles sold in the U.S.A.

This device complies with part 15 of the FCC Rules. Operation is subject to the following two conditions: (1) This device may not cause harmful interference, and (2) this device must accept any interference received, including interference that may cause undesired operation.

FCC WARNING:
Changes or modifications not expressly approved by the party responsible for compliance could void the user's authority to operate the equipment.

For vehicles sold in Canada

Operation is subject to the following two conditions: (1) this device may not cause interference, and (2) this device must accept any interference, including interference that may cause undesired operation of the device.

CAUTION

When inspecting or replacing tires

Observe the following precautions to prevent accidents. Failure to do so may cause damage to parts of the drive train as well as dangerous handling characteristics, which may lead to an accident resulting in death or serious injury.

- Do not mix tires of different makes, models or tread patterns. Also, do not mix tires of remarkably different treadwear.
- Do not use tire sizes other than those recommended by Toyota.
- Do not mix differently constructed tires (radial, bias-belted or bias-ply tires.)
- Do not mix summer, all season and snow tires.

NOTICE

■ **Repairing or replacing tires, wheels, tire pressure warning valves, transmitters and tire valve caps**

- When removing or fitting the wheels, tires or the tire pressure warning valves and transmitters, contact your Toyota dealer as the tire pressure warning valves and transmitter may be damaged if not handled correctly.
- When replacing tire valve caps, do not use tire valve caps other than those specified. The cap may become stuck.

■ **To avoid damaging the tire pressure warning valves and transmitters**

Do not use liquid sealants on flat tires.

■ **Driving on rough roads**

Take particular care when driving on roads with loose surfaces or potholes. These conditions may cause losses in tire inflation pressure, reducing the cushioning ability of the tires. In addition, driving on rough roads may cause damage to the tires themselves, as well as the vehicle's wheels and body.

■ **If tire inflation pressures of each tire becomes low while driving**

Do not continue driving, or your tires and/or wheels may be ruined.

Tire inflation pressure

The recommended cold tire inflation pressure and tire size are displayed on the tire and loading information label. (→P. 628)

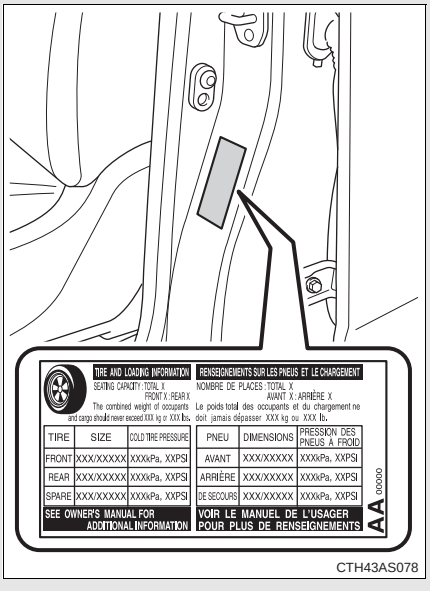

CTH43AS078

Inspection and adjustment procedure

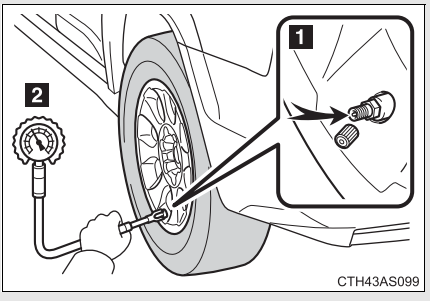

1 Tire valve

2 Tire pressure gauge

STEP 1 Remove the tire valve cap.

STEP 2 Press the tip of the tire pressure gauge onto the tire valve.

STEP 3 Read the pressure using the gauge gradations.

STEP 4 If the tire inflation pressure is not at the recommended level, adjust the pressure.
If you add too much air, press the center of the valve to deflate.

STEP 5 After completing the tire inflation pressure measurement and adjustment, apply soapy water to the valve and check for leakage.

STEP 6 Put the tire valve cap back on.

Tire inflation pressure check interval

You should check tire inflation pressure every two weeks, or at least once a month.
Do not forget to check the spare.

■Effects of incorrect tire inflation pressure

Driving with incorrect tire inflation pressure may result in the following:

- Reduced fuel efficiency
- Reduced driving comfort and tire life
- Reduced safety
- Damage to the drive train

If a tire needs frequent inflating, have it checked by your Toyota dealer.

■Instructions for checking tire inflation pressure

When checking tire inflation pressure, observe the following:

- Check only when the tires are cold.
  If your vehicle has been parked for at least 3 hours or has not been driven for more than 1 mile or 1.5 km, you will get an accurate cold tire inflation pressure reading.
- Always use a tire pressure gauge.
  The appearance of the tire can be misleading. In addition, tire inflation pressure that is even just a few pounds off can affect ride quality and handling.
- Do not reduce tire inflation pressure after driving. It is normal for tire inflation pressure to be higher after driving.
- Never exceed the vehicle capacity weight.
  Passengers and luggage weight should be placed so that the vehicle is balanced.

CAUTION

■Proper inflation is critical to save tire performance

Keep your tires properly inflated. Otherwise, the following conditions may occur and result in an accident causing death or serious injury:

- Excessive wear
- Uneven wear
- Poor handling
- Possibility of blowouts resulting from overheated tires
- Poor sealing of the tire bead
- Wheel deformation and/or tire separation
- A greater possibility of tire damage from road hazards

NOTICE

■When inspecting and adjusting tire inflation pressure

Be sure to put the tire valve caps back on.
Without the valve caps, dirt or moisture could get into the valve and cause air leakage, which could result in an accident. If the caps are lost, replace them as soon as possible.

If a wheel is bent, cracked or heavily corroded, it should be replaced. Otherwise, the tire may separate from the wheel or cause a loss of handling control.

Wheel selection

When replacing wheels, care should be taken to ensure that they are equivalent to those removed in load capacity, diameter, rim width and inset*.
Replacement wheels are available at your Toyota dealer.

*: Conventionally referred to as “offset”.

Toyota does not recommend using the following:

- Wheels of different sizes or types
- Used wheels
- Bent wheels that have been straightened

Aluminum wheel precautions

- Use only Toyota wheel nuts and wrenches designed for use with your aluminum wheels.
- When rotating, repairing or changing your tires, check that the wheel nuts are still tight after driving 1000 miles (1600 km).
- Be careful not to damage the aluminum wheels when using tire chains.
- When balancing your wheels, use only Toyota genuine balance weights or the equivalent. If clip-on balance weights are being used, use a plastic or rubber hammer to install the weight.

When replacing wheels

The wheels of your vehicle are equipped with tire pressure warning valves and transmitters that allow the tire pressure warning system to provide advanced warning in the event of a loss in tire inflation pressure. Whenever wheels are replaced, the tire pressure warning valves and transmitters must be installed. (→P. 515)

CAUTION

When replacing wheels

- Do not use wheels that are a different size from those recommended in the Owner's Manual, as this may result in a loss of handling control.
- Never use an inner tube in a leaking wheel which is designed for a tubeless tire. Doing so may result in an accident, causing death or serious injury.

NOTICE

Replacing tire pressure warning valves and transmitters

- Because tire repair or replacement may affect the tire pressure warning valves and transmitters, make sure to have tires serviced by your Toyota dealer or other qualified service shop. In addition, make sure to purchase your tire pressure warning valves and transmitters at your Toyota dealer.
- Ensure that only genuine Toyota wheels are used on your vehicle.
  Tire pressure warning valves and transmitters may not work properly with non-genuine wheels.

Air conditioning filter

The air conditioning filter must be cleaned or changed regularly to maintain air conditioning efficiency.

■ Removal method

STEP 1 Turn the engine switch (vehicles without a smart key system) or “ENGINE START STOP” switch (vehicles with a smart key system) off.

STEP 2

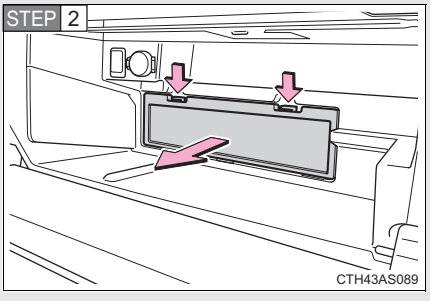

Open the glove box and remove the cover.

STEP 3

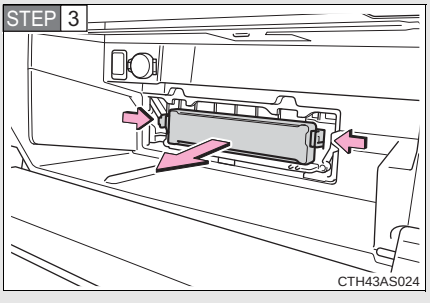

Remove the filter cover.

STEP 4

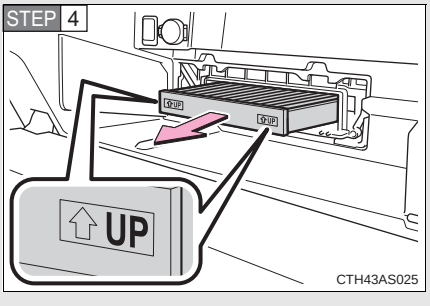

Remove the filter.

The “↑UP” marks shown on the filter should be pointing up.

Cleaning method

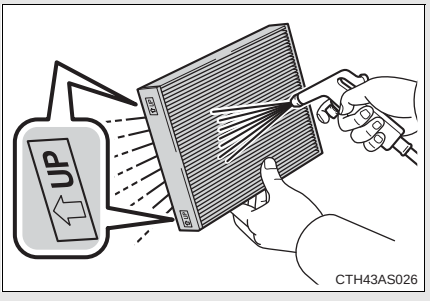

If the filter is dirty, clean by blowing compressed air through the filter from the underside.

Hold the air gun 2 in. (5 cm) from the filter and blow for approximately 2 minutes at 72 psi (500 kPa, 5.0 kgf/cm^2 or bar).

If an air gun is not available, have the filter cleaned by your Toyota dealer.

Checking interval

Inspect, clean and replace the air conditioning filter according to the maintenance schedule. In dusty areas or areas with heavy traffic flow, more frequent cleaning or early replacement may be required. (For scheduled maintenance information, please refer to the “Scheduled Maintenance Guide” or “Owner’s Manual Supplement”.)

If air flow from the vents decreases dramatically

The filter may be clogged. Check the filter and replace if necessary.

NOTICE

To prevent damage to the system

- When using the air conditioning system, make sure that a filter is always installed.
- When cleaning the filter, do not clean with water.

Replace the battery with a new one if it is depleted.

■ You will need the following items:

- Flathead screwdriver
- Lithium battery CR2016 (vehicles without a smart key system), or CR1632 (vehicles with a smart key system)

■ Replacing the battery (vehicles without a smart key system)

STEP 1

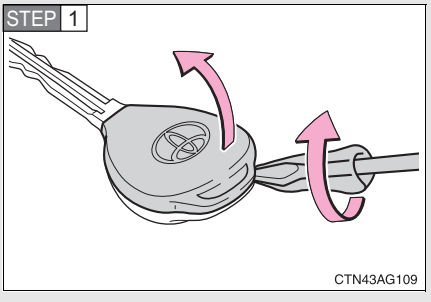

Remove the cover.

To prevent damage to the key, cover the tip of the screwdriver with a rag.

STEP 2

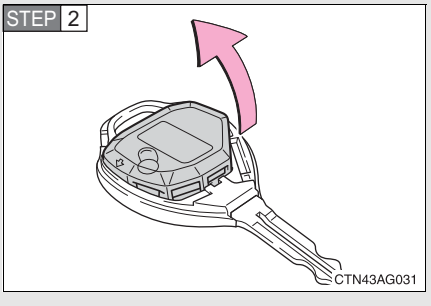

Remove the module.

STEP 3

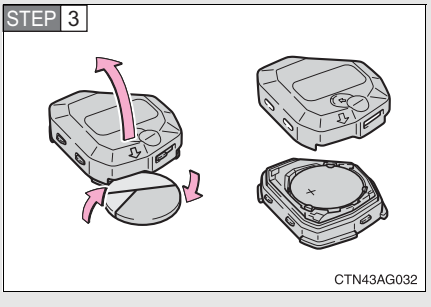

Open the case cover using a coin protected with tape etc. and remove the depleted battery.

Insert a new battery with the “+” terminal facing up.

■ Replacing the battery (vehicles with a smart key system)

STEP 1

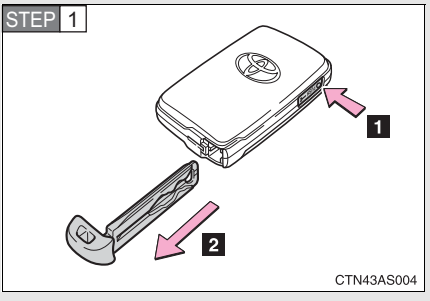

Take out the mechanical key.

STEP 2

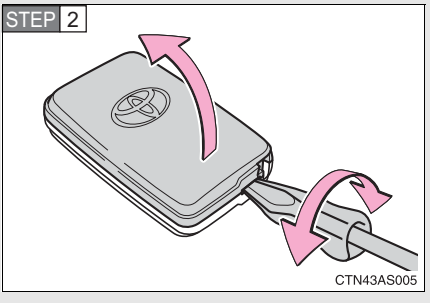

Remove the cover.

To prevent damage to the key, cover the tip of the screwdriver with a rag.

STEP 3

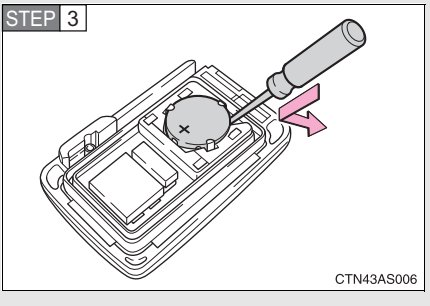

Remove the depleted battery.

Insert a new battery with the “+” terminal facing up.

■ **Use a CR2016 (vehicles without a smart key system) or CR1632 (vehicles with a smart key system) lithium battery**

- Batteries can be purchased at your Toyota dealer, local electrical appliance shops or camera stores.
- Replace only with the same or equivalent type recommended by the manufacturer.
- Dispose of used batteries according to local laws.

■ **If the key battery is depleted**

The following symptoms may occur:

- The smart key system and wireless remote control will not function properly.
- The operational range will be reduced.

CAUTION

■ **Removed battery and other parts**

Keep away from children. These parts are small and if swallowed by a child, they can cause choking. Failure to do so could result in death or serious injury.

NOTICE

■ **For normal operation after replacing the battery**

Observe the following precautions to prevent accidents:

- Always work with dry hands.
  Moisture may cause the battery to rust.
- Do not touch or move any other component inside the remote control.
- Do not bend either of the battery terminals.

Checking and replacing fuses

If any of the electrical components do not operate, a fuse may have blown. If this happens, check and replace the fuses as necessary.

STEP 1 **Vehicles without a smart key system**

Turn the engine switch off.

Vehicles with a smart key system

Turn the “ENGINE START STOP” switch off.

STEP 2 Open the fuse box cover.

Engine compartment

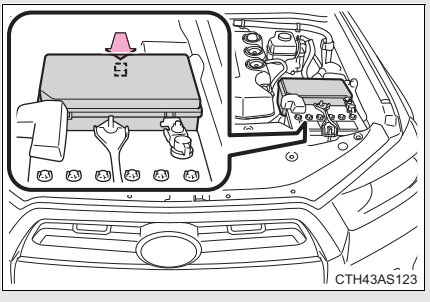

Push the tab in and lift the lid off.

Driver’s side instrument panel

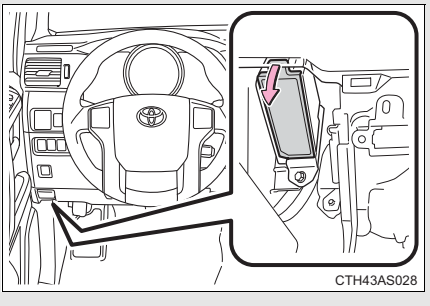

Remove the lid.

STEP 3 After a system failure, see “Fuse layout and amperage ratings” (→P. 535) for details about which fuse to check.

STEP 4 Remove the fuse.

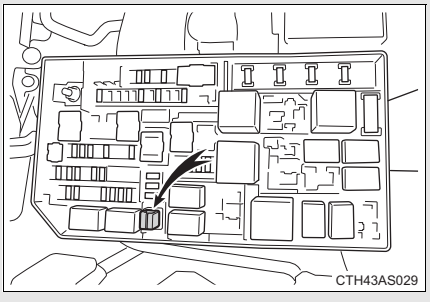

Only type A fuse can be removed using the pull-out tool.

STEP 5 Check if the fuse is blown.

Type A

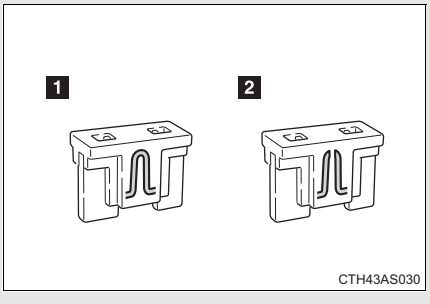

1 Normal fuse

2 Blown fuse

Replace the blown fuse with a new fuse of an appropriate amperage rating. The amperage rating can be found on the fuse box lid.

Type B

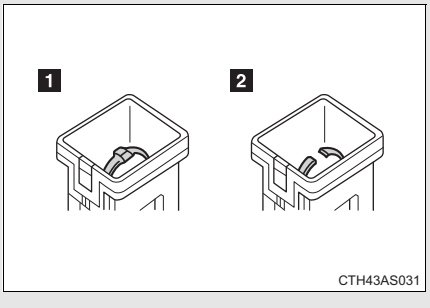

1 Normal fuse

2 Blown fuse

Replace the blown fuse with a new fuse of an appropriate amperage rating. The amperage rating can be found on the fuse box lid.

Type C

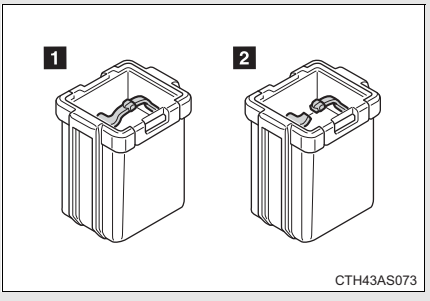

1 Normal fuse

2 Blown fuse

Replace the blown fuse with a new fuse of an appropriate amperage rating. The amperage rating can be found on the fuse box lid.

Type D

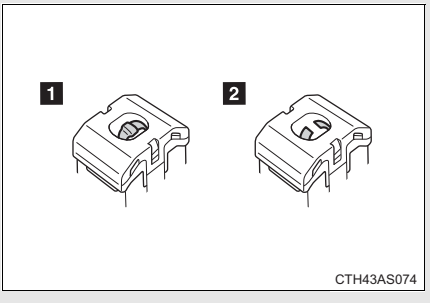

1 Normal fuse

2 Blown fuse

Replace the blown fuse with a new fuse of an appropriate amperage rating. The amperage rating can be found on the fuse box lid.

Type E

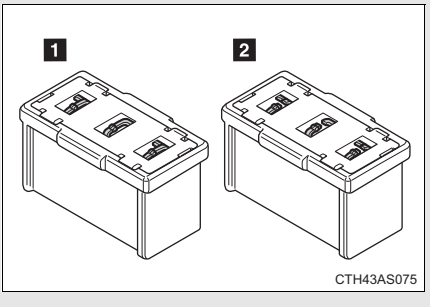

1 Normal fuse

2 Blown fuse

Replace the blown fuse with a new fuse of an appropriate amperage rating. The amperage rating can be found on the fuse box lid.

Type F

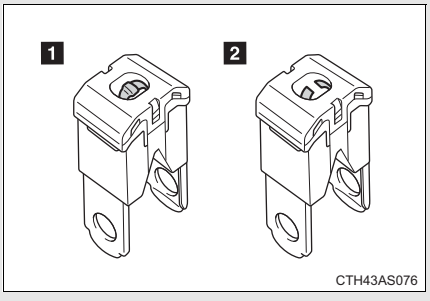

1 Normal fuse

2 Blown fuse

Contact your Toyota dealer.

Fuse layout and amperage ratings

Engine compartment

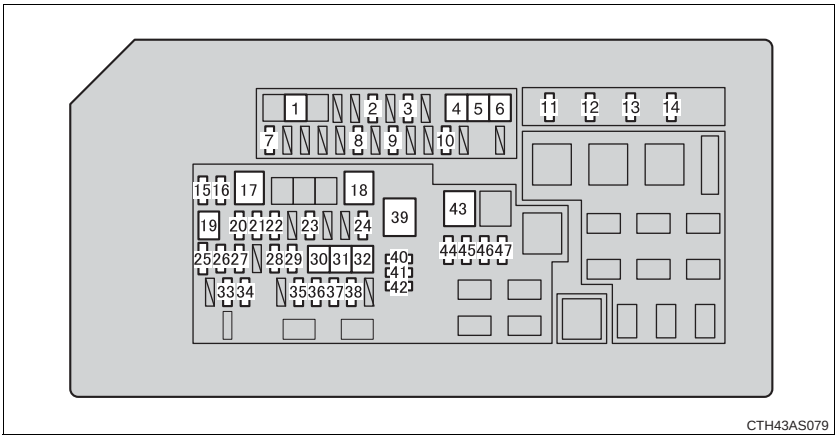

Fuse		Ampere	Circuit
1	PTC HTR NO.3	30 A	PTC heater
2	DEF	30 A	Rear window defogger
3	DEICER	20 A	Windshield wiper de-icer
4	PTC HTR NO.2	30 A	PTC heater
5	SUB BATT	30 A	Trailer sub battery
6	PTC HTR NO.1	50 A	PTC heater
7	MIR HTR	10 A	Outside rear view mirror defoggers
8	TOWING TAIL	30 A	Trailer tail light
9	A/C COMP	10 A	Air conditioning system
10	STOP	10 A	Stop/tail lights
11	IG2	20 A	INJ, IGN, GAUGE fuses
12	HORN	10 A	Horn(s)
13	EFI	25 A	Multiport fuel injection system/ sequential multiport fuel injection system
14	A/F	20 A	A/F sensor

Fuse		Ampere	Circuit
15	H-LP RH-HI	10 A	Right-hand headlight (high beam)
16	H-LP LH-HI	10 A	Left-hand headlight (high beam)
17	HTR	50 A	Air conditioning system
18	400W INV	80 A	Power outlets
19	ST	30 A	Starter system
20	H-LP HI	20 A	H-LP RH-HI, H-LP LH-HI fuses
21	ALT-S	7.5 A	Charging system
22	TURN&HAZ	15 A	Turn signal lights, emergency flashers
23	ETCS	10 A	Multiport fuel injection system/ sequential multiport fuel injection system
24	TOWING	30 A	Trailer stop/turn lights
25	SHORT PIN	—	No circuit
26	RAD NO.1	10 A	Audio system
27	AM2	7.5 A	Starter system
28	MAYDAY	7.5 A	Safety connect
29	AMP	30 A	Audio system
30	ABS NO.1	50 A	ABS, VSC
31	ABS NO.2	30 A	ABS, VSC
32	AIR PMP	50 A	Multiport fuel injection system/ sequential multiport fuel injection system
33	DOME	10 A	Interior lights, vanity lights
34	ECU-B	10 A	Multiplex communication system, meter and gauge
35	H-LP RH-LO	10 A	Right-hand headlight (low beam)
36	H-LP LH-LO	10 A	Left-hand headlight (low beam)
37	INJ	10 A	Multiport fuel injection system/ sequential multiport fuel injection system

Fuse		Ampere	Circuit
38	EFI NO.2	7.5 A	Multiport fuel injection system/ sequential multiport fuel injection system
39	ALT	120 A*	HTR, 400W INV, A/C COMP, TOWING TAIL, SUB BATT, MIR HTR, DEF, DEICER, STOP, PTC HTR NO.1, PTC HTR NO.2, PTC HTR NO.3, S/HTR FR, ACC, P/OUTLET, IG1, ECU-IG NO.1, ECU-IG NO.2, WIP, WASHER, KDSS, 4WD, BKUP LP, TOWING BKUP, DOOR P, DOOR RL, DOOR RR, DOOR D, P/SEAT FL, P/SEAT FR, DOOR, A/C, OBD, DOOR BACK, S/ROOF, PANEL, TAIL, FOG FR, D/L NO.2 fuses
		140 A*	
40	SPARE	10 A	—
41	SPARE	15 A	—
42	SPARE	20 A	—
43	P/I-B	80 A	IG2, EFI, A/F, HORN fuses
44	SECURITY	10 A	Multiport fuel injection system/ sequential multiport fuel injection system
45	SMART	7.5 A	Smart key system
46	STRG LOCK	20 A	Steering lock system
47	TOWING BRK	30 A	Trailer brake controller

*: Replace the fuse with one of the same ampere rating as the original

Driver’s side instrument panel

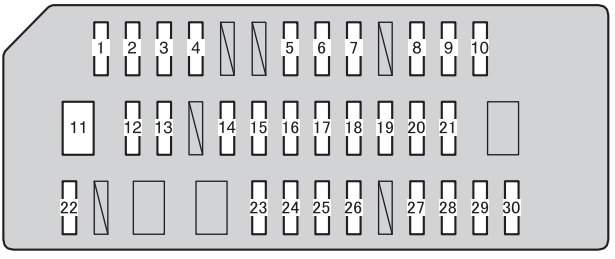

CTH43AS035

Fuse		Ampere	Circuit
1	TAIL	10 A	Stop/tail lights
2	PANEL	7.5 A	Instrument panel lights
3	GAUGE	7.5 A	Meter and gauge
4	IGN	10 A	Multiport fuel injection system/ sequential multiport fuel injection system, air bag system, smart key system
5	WASHER	20 A	Wiper and washer
6	WIP	30 A	Wiper and washer
7	S/ROOF	25 A	Electric moon roof
8	DOOR RR	25 A	Power windows
9	DOOR D	25 A	Power windows
10	DOOR BACK	30 A	Multiplex communication system
11	DOOR P	30 A	Power windows
12	P/SEAT FR	30 A	Front passenger's power seat
13	S/HTR FR	20 A	Seat heater system
14	ECU-IG NO.2	10 A	Air conditioning system, multiport fuel injection system/ sequential multiport fuel injection system
15	IG1	7.5 A	Turn signal lights, emergency flashers
16	ECU-IG NO.1	10 A	Vehicle stability control system, tire pressure warning system, steering sensor
17	DOOR	7.5 A	Power windows

Fuse		Ampere	Circuit
18	DOOR RL	25 A	Power windows
19	AM1	7.5 A	Starter system
20	A/C	7.5 A	Air conditioning system
21	OBD	7.5 A	On-Board diagnosis
22	FOG FR	15 A	Fog lights
23	D/L NO.2	25 A	Multiplex communication system
24	P/SEAT FL	30 A	Front driver’s power seat
25	4WD	20 A	Four wheel drive system
26	KDSS	10 A	Kinetic dynamic suspension system
27	TOWING BKUP	10 A	Trailer back-up lights
28	BKUP LP	10 A	Back-up lights
29	ACC	7.5 A	Multiport fuel injection system/ sequential multiport fuel injection system
30	P/OUTLET	15 A	Power outlets

After a fuse is replaced

- If the lights do not turn on even after the fuse has been replaced, a bulb may need replacement. (→P. 541)
- If the replaced fuse blows again, have the vehicle inspected by your Toyota dealer.

If there is an overload in a circuit

The fuses are designed to blow before the entire wiring harness is damaged.

CAUTION

To prevent system breakdowns and vehicle fire

Observe the following precautions.
Failure to do so may cause damage, and possibly a fire or injury.

- Never use a fuse of a higher amperage rating than that indicated, or use any other object in place of a fuse.
- Always use a genuine Toyota fuse or equivalent.
  Never replace a fuse with a wire, even as a temporary fix.
  This can cause extensive damage or even fire.
- Do not modify the fuses or fuse boxes.

NOTICE

Before replacing fuses

Have the cause of electrical overload determined and repaired by your Toyota dealer as soon as possible.

Light bulbs

You may replace the following bulbs yourself. The difficulty level of replacement varies depending on the bulb. If necessary bulb replacement seems difficult to perform, contact your Toyota dealer.

For more information about replacing other light bulbs, contact your Toyota dealer.

■ Preparing for light bulb replacement

Check the wattage of the light bulb to be replaced. (→P. 624)

■ Removing the engine compartment cover

→P. 497

■ Front bulb locations

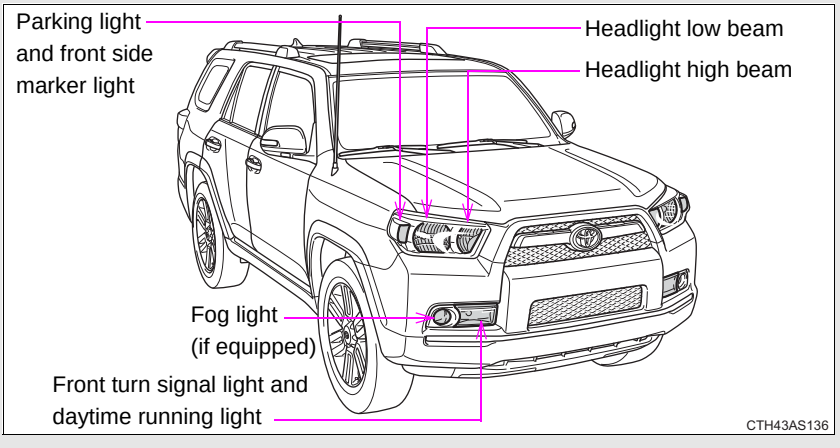

Rear bulb locations

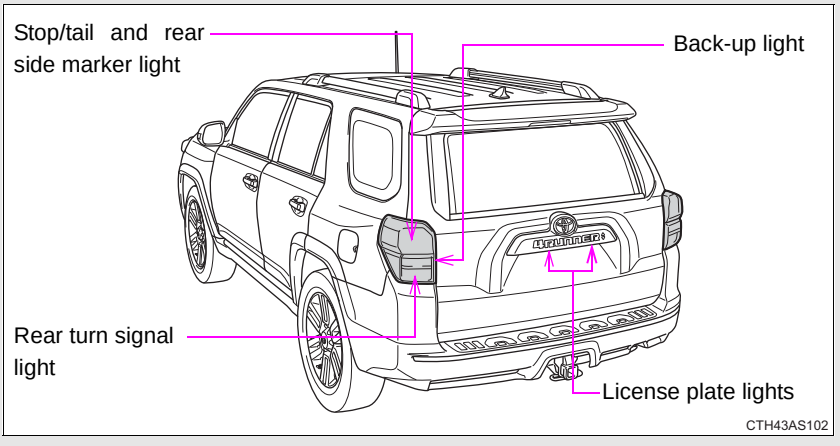

Replacing light bulbs

Headlight

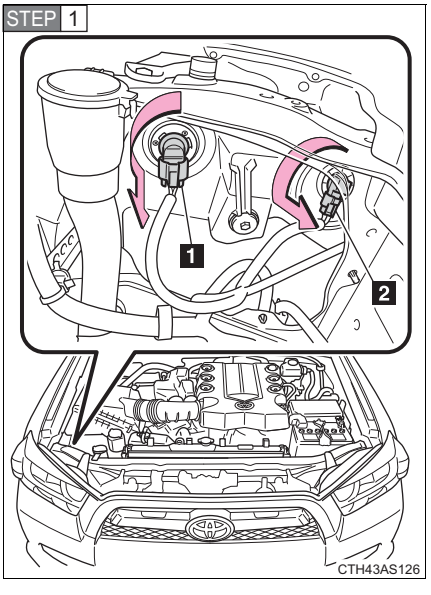

Turn the bulb base counterclockwise.

1 High beam (inside)

2 Low beam (outside)

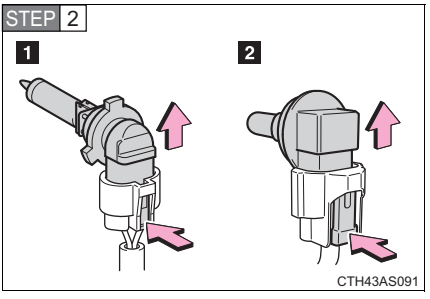

Unplug the connector while depressing the lock release.

1 High beam

2 Low beam

■ Parking light and front side marker light

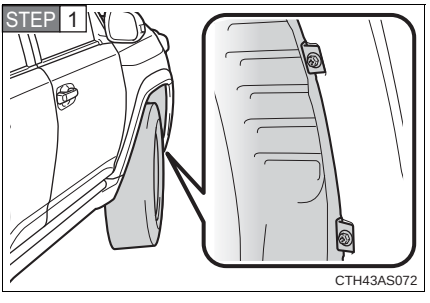

Turn the steering wheel in the opposite direction of the parking light and front side marker light that you wish to replace.

For example, if you wish to replace the parking light and front side marker light on the right side, turn the steering wheel to the left.

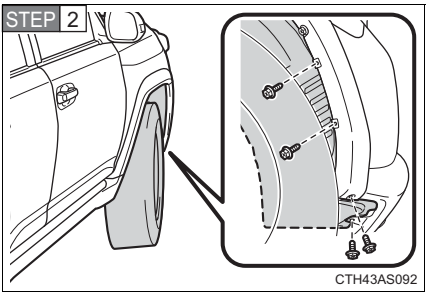

Remove the fender liner screws.

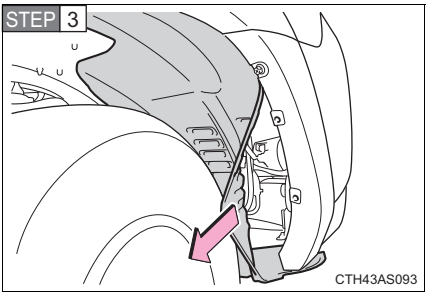

Partly remove the fender liner.

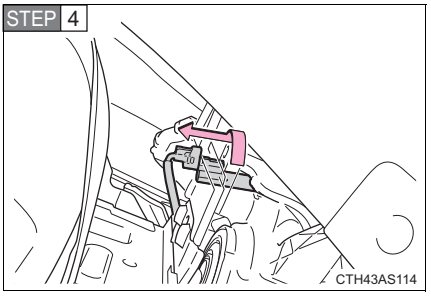

Turn the bulb base counterclockwise.

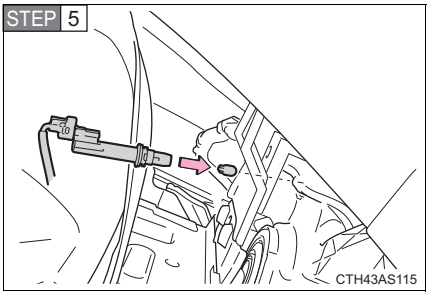

Remove the light bulb.

■ Fog light (if equipped)

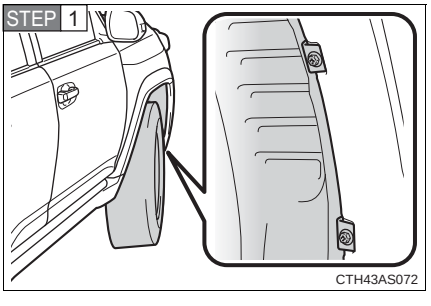

Turn the steering wheel in the opposite direction of the fog light that you wish to replace.

For example, if you wish to replace the fog light on the right side, turn the steering wheel to the left.

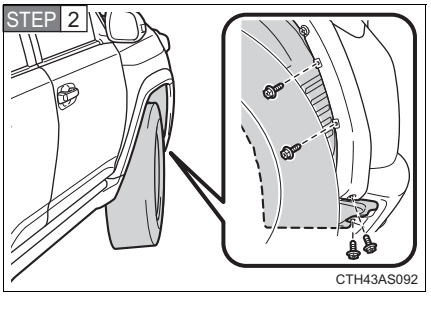

Remove the fender liner screws.

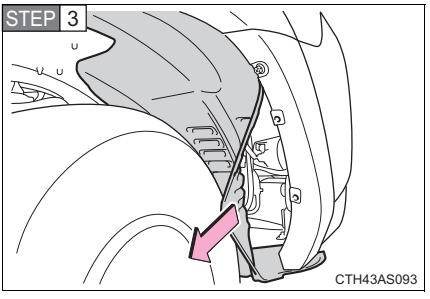

Partly remove the fender liner.

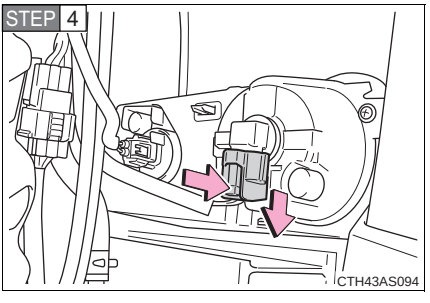

Unplug the connector while depressing the lock release.

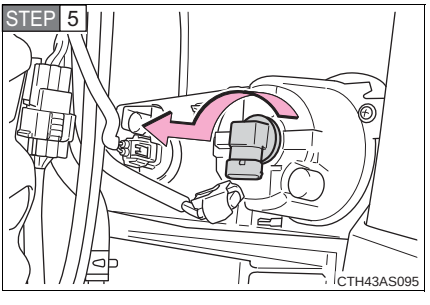

Turn the bulb base counterclockwise.

■ Front turn signal light and daytime running light

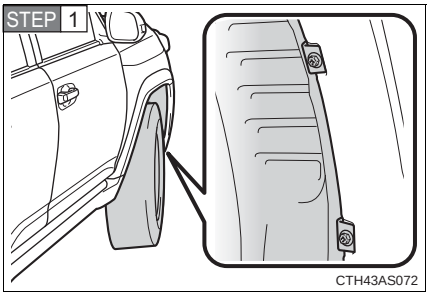

Turn the steering wheel in the opposite direction of the front turn signal light and daytime running light that you wish to replace.

For example, if you wish to replace the front turn signal light and daytime running light on the right side, turn the steering wheel to the left.

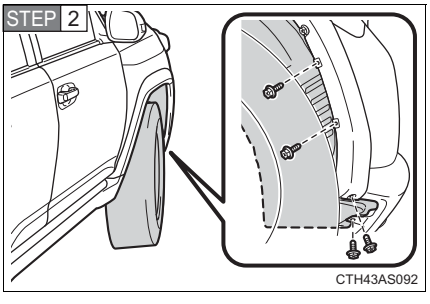

Remove the fender liner screws.

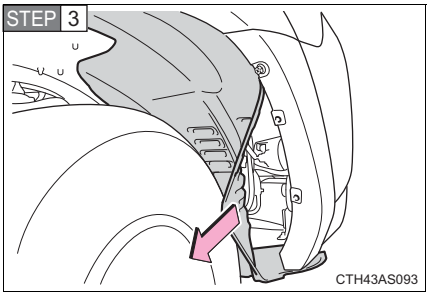

Partly remove the fender liner.

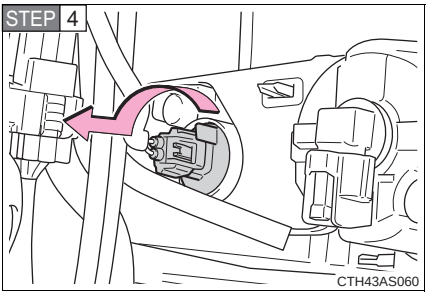

Turn the bulb base counterclockwise.

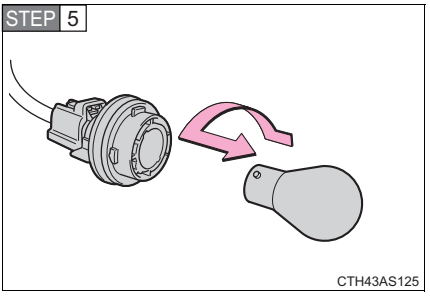

Remove the light bulb.

■ Stop/tail and rear side marker light and back-up light

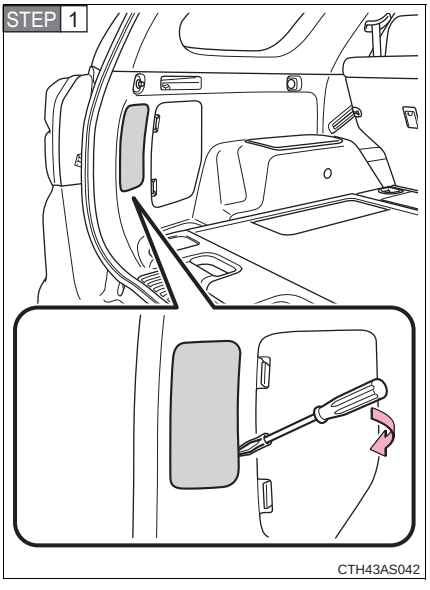

Open the back door and remove the cover.

Using a flathead screwdriver or equivalent which is wrapped with a cloth.

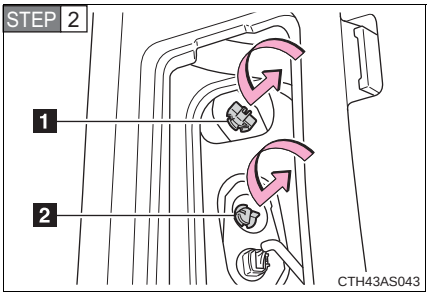

Turn the bulb base counterclockwise.

1 Stop/tail and rear side marker light

2 Back-up light

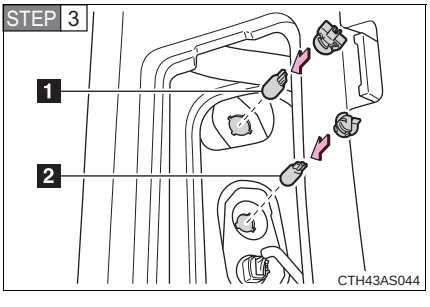

Remove the light bulb.

1 Stop/tail and rear side marker light

2 Back-up light

■ Rear turn signal light

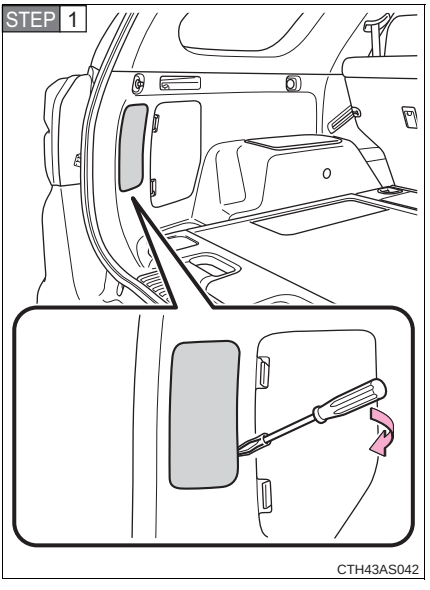

Open the back door and remove the cover.

Using a flathead screwdriver or equivalent which is wrapped with a cloth.

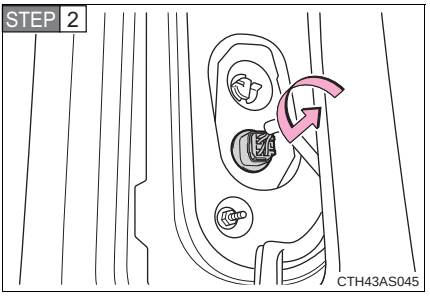

Turn the bulb base counterclockwise.

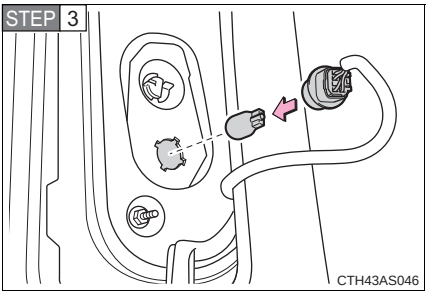

Remove the light bulb.

License plate light

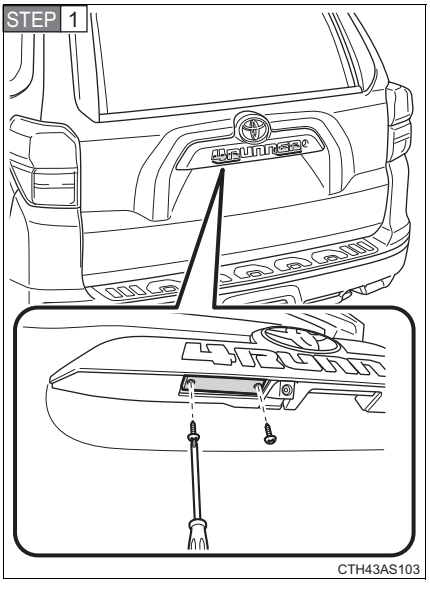

Remove the screws and lens.

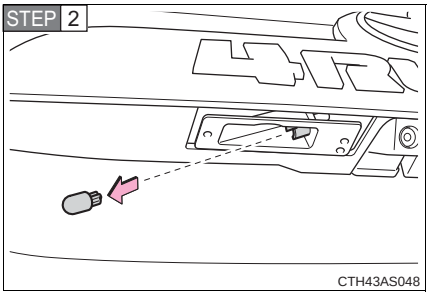

Remove the light bulb.

Lights other than the above

If any of the lights listed below has burnt out, have your Toyota dealer replace it.

- Side turn signal lights (if equipped)
- High mounted stoplight
- Outer foot lights (if equipped)

LED light bulbs

The side turn signal lights and high mounted stoplight consist of a number of LEDs. If any LEDs burn out, take your vehicle to your Toyota dealer to have the light replaced.

Condensation build-up on the inside of the lens

Contact your Toyota dealer for more information in the following situations. Temporary condensation build-up on the inside of the headlight lens does not indicate a malfunction.

- Large drops of water are built up on the inside of the lens.
- Water has built up inside the headlight.

CAUTION

Replacing light bulbs

- Turn off the lights. Do not attempt to replace the bulb immediately after turning off the lights.
  The bulbs become very hot and may cause burns.
- Do not touch the glass portion of the light bulb with bare hands. Hold the bulb by the plastic or metal portion.
  If the bulb is scratched or dropped it may blow out or crack.
- Fully install light bulbs and any parts used to secure them. Failing to do so may result in heat damage, fire, or water entering the headlight unit. This may damage the headlights or cause condensation to build up on the lens.

To prevent damage or fire

Make sure bulbs are fully seated and locked.

When trouble arises

5

5-1. Essential information

Emergency flashers 554

If your vehicle needs to be towed 555

If you think something is wrong 561

Fuel pump shut off system 562

Event data recorder 563

5-2. Steps to take in an emergency

If a warning light turns on or a warning buzzer sounds 565

If you have a flat tire..... 578

If the engine will not start 591

If the shift lever cannot be shifted from P..... 593

If you lose your keys 595

If you cannot operate back door opener 596

If the electronic key does not operate properly..... 597

If the vehicle battery is discharged 599

If your vehicle overheats 604

If the vehicle becomes stuck 607

If your vehicle has to be stopped in an emergency 608

Emergency flashers

Use the emergency flashers if the vehicle malfunctions or is involved in an accident.

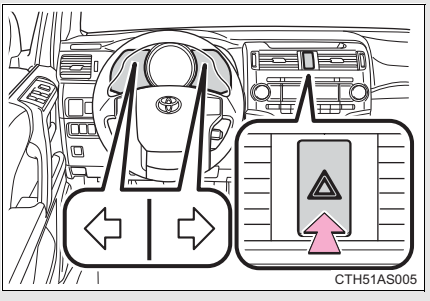

Press the switch to flash all the turn signal lights. To turn them off, press the switch once again.

NOTICE

■ **To prevent battery discharge**

Do not leave the emergency flashers on longer than necessary when the engine is not running.

If towing is necessary, we recommend having your vehicle towed by your Toyota dealer or a commercial towing service, using a lift-type truck or flatbed truck.
Use a safety chain system for all towing, and abide by all state/provincial and local laws.

Before towing

The following may indicate a problem with your transmission. Contact your Toyota dealer before towing.

- The engine is running but the vehicle will not move.
- The vehicle makes an abnormal sound.

Emergency towing

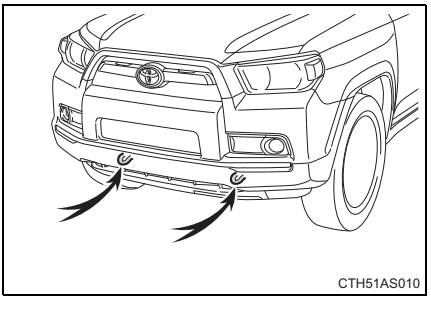

If a tow truck is not available in an emergency, your vehicle may be temporarily towed using a cable or chain secured to the emergency towing eyelet(s). This should only be attempted on hard surfaced roads for short distances at low speeds.
A driver must be in the vehicle to steer and operate the brakes. The vehicle's wheels, drive train, axles, steering and brakes must be in good condition.

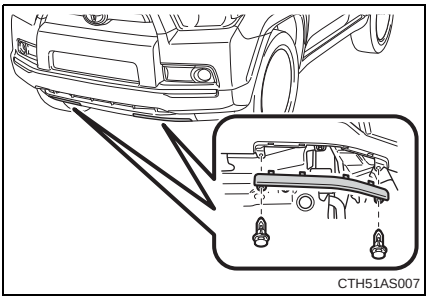

Vehicles with a front spoiler only: Before using the front emergency towing eyelet(s), remove the cover(s).

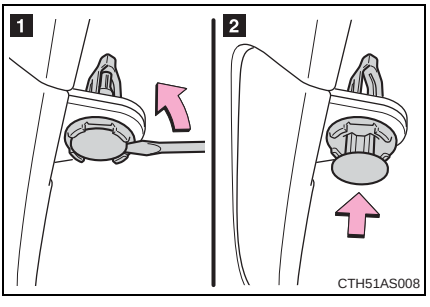

1 Removing the clips

2 Installing the clips

Towing with a sling-type truck

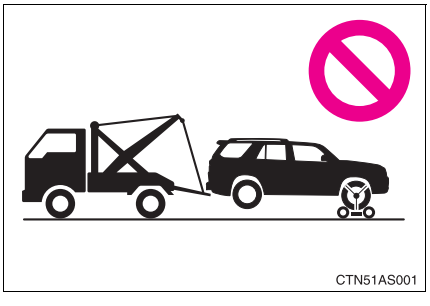

Do not tow with a sling-type truck to prevent body damage.

Towing with a wheel lift-type truck

From the front

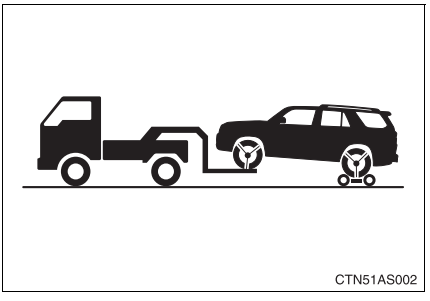

Use a towing dolly under the rear wheels.

From the rear (2WD models)

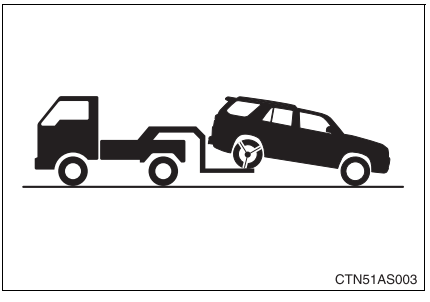

Vehicles without a smart key system: Turn the engine switch to the “ACC” position so that the steering wheel is unlocked.

Vehicles with a smart key system: Turn the “ENGINE START STOP” switch to ACCESSORY mode so that the steering wheel is unlocked.

From the rear (4WD models)

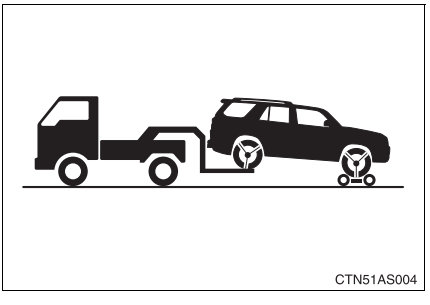

Full-time 4WD models: Use a towing dolly under the front wheels.

Part-time 4WD models: When not using a towing dolly, turn the engine switch to the “ACC” position, shift the shift lever to N and shift the front-wheel drive control lever to H2.

Using a flatbed truck

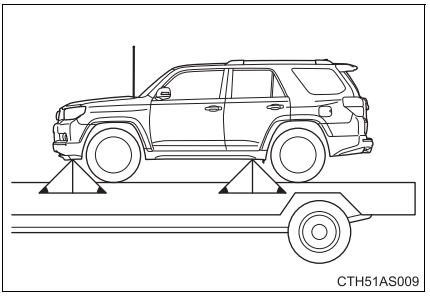

If you use chains or cables to tie down your vehicle, the angles shaded in black must be 45°.

Do not overly tighten the tie downs or the vehicle may be damaged.

Before emergency towing

STEP 1 Vehicles without a smart key system: Turn the engine switch to the “ACC” (engine off) or “ON” position.

Vehicles with a smart key system: Turn the “ENGINE START STOP” switch to ACCESSORY (engine off) or IGNITION ON mode (engine running).

STEP 2 Part-time 4WD models: Shift the front-wheel drive control lever to H2.

Full-time 4WD models: Put the four-wheel drive control switch in H4F. (The center differential is unlocked.)

STEP 3 Shift the shift lever to N.

STEP 4 Release the parking brake.

CAUTION

■ **Caution while towing**

- Use extreme caution when towing the vehicle.
  Avoid sudden starts or erratic driving maneuvers which place excessive stress on the emergency towing eyelets and the cables or chains. Always use caution for the surroundings and other vehicles while towing.
- Vehicles with a smart key system: Do not turn the “ENGINE START STOP” switch off.
  Doing so will lock the steering wheel and prevent operation, possibly causing an accident and resulting in death or serious injury.
- If the engine is not running, the power assist for the brakes and steering will not function, making steering and braking more difficult.

NOTICE

■ **To prevent causing serious damage to the transmission and transfer (4WD models) when towing using a wheel-lift type truck**

2WD models: Never tow this vehicle from the front with the rear wheels on the ground.
4WD models: Never tow this vehicle with any of the wheels in contact with the ground.

■ **To prevent damage to the vehicle when towing using a wheel-lift type truck**

- 2WD models without a smart key system: Do not tow the vehicle from the rear when the engine switch is in the “LOCK” position or the key is removed. The steering lock mechanism is not strong enough to hold the front wheels straight.
- 2WD models with a smart key system: Do not tow the vehicle from the rear when the “ENGINE START STOP” switch is off. The steering lock mechanism is not strong enough to hold the front wheels straight.
- When raising the vehicle, ensure adequate ground clearance for towing at the opposite end of the raised vehicle. Without adequate clearance, the vehicle could be damaged while being towed.

NOTICE

■ **To prevent body damage when towing with a sling-type truck**

Do not tow with a sling-type truck, either from the front or rear.

■ **To prevent causing serious damage to the transmission and transfer (4WD models) in emergency towing**

Never tow a vehicle from the rear with four wheels on the ground. This may cause serious damage to the transmission and transfer.

If you notice any of the following symptoms, your vehicle probably needs adjustment or repair. Contact your Toyota dealer as soon as possible.

Visible symptoms

- Fluid leaks under the vehicle
  (Water dripping from the air conditioning after use is normal.)
- Flat-looking tires or uneven tire wear
- Engine coolant temperature gauge needle continually points higher than normal
- Voltmeter (if equipped) continually points higher or lower than normal

Audible symptoms

- Changes in exhaust sound
- Excessive tire squeal when cornering
- Strange noises related to the suspension system
- Pinging or other noises related to the engine

Operational symptoms

- Engine missing, stumbling or running roughly
- Appreciable loss of power
- Vehicle pulls heavily to one side when braking
- Vehicle pulls heavily to one side when driving on a level road
- Loss of brake effectiveness, spongy feeling, pedal almost touches the floor

Fuel pump shut off system

To minimize the risk of fuel leakage when the engine stalls or when an airbag inflates upon collision, the fuel pump shut off system stops the supply of fuel to the engine.

Follow the procedure below to restart the engine after the system is activated.

Vehicles without a smart key system

STEP 1 Turn the engine switch to the “ACC” or “LOCK” position.

STEP 2 Restart the engine.

Vehicles with a smart key system

STEP 1 Turn the “ENGINE START STOP” switch off.

STEP 2 Restart the engine.

NOTICE

Before starting the engine

Inspect the ground under the vehicle.
If you find that fuel has leaked onto the ground, the fuel system has been damaged and is in need of repair. Do not restart the engine.

Event data recorder

Your vehicle has computers that monitor and control certain aspects of your vehicle. These computers assist in driving and maintaining optimal vehicle performance.

Besides storing data useful for troubleshooting, there is an event data recorder (EDR) that records data in a crash or near crash event.

In a crash or near crash event

The SRS airbag sensor assembly contains the EDR. In a crash or near crash event, this device may record some or all of the following information:

- Gasoline engine speed
- Whether the brake pedal was depressed or not
- Vehicle speed
- To what extent the accelerator pedal was depressed
- Position of the transmission shift lever
- Whether the driver and front passenger wore seat belts or not
- Driver's seat position
- SRS airbag deployment data
- SRS airbag system diagnostic data
- Front passenger's occupant classification

The information above is intended to be used for the purpose of improving vehicle safety performance. Unlike general data recorders, the EDR does not record sound data such as conversation between passengers.

Disclosure of the data

Toyota will not disclose the data recorded in an EDR to a third party except when:

- An agreement from the vehicle's owner (or the leasing company for a leased vehicle) is obtained
- Officially requested to by the police or other authorities
- Necessary, to be used as a defense for Toyota in a law suit
- Ordered by a court of law

However, if necessary Toyota will:

- Use the data for research on Toyota vehicle safety performance
- Disclose the data to a third party for research purposes without disclosing details of the vehicle owner, and that only when deemed necessary
- Disclose summarized data cleared of vehicle identification information to a non-Toyota organization for research purposes

Calmly perform the following actions if any of the warning lights comes on or flashes. If a light comes on or flashes, but then goes off, this does not necessarily indicate a malfunction in the system. However, if this continues to occur, have the vehicle inspected by your Toyota dealer.

Stop the vehicle immediately. Continuing to drive the vehicle may be dangerous.

The following warning indicates a possible problem in the brake system. Immediately stop the vehicle in a safe place and contact your Toyota dealer.

Warning light	Warning light/Details
BRAKE (type A) BRAKE (type B) (type C)	**Brake system warning light (warning buzzer)*** • Low brake fluid • Malfunction in the brake system This light also comes on when the parking brake is not released. If the light turns off after the parking brake is fully released the system is operating normally.

***: Parking brake engaged warning buzzer:**

A buzzer will sound if the vehicle is driven at a speed of approximately 3 mph (5 km/h) or more.

Stop the vehicle immediately.

The following warnings indicate the possibility of damage to the vehicle that may lead to an accident. Immediately stop the vehicle in a safe place and contact your Toyota dealer.

Warning light	Warning light/Details
	Charging system warning light Indicates a malfunction in the vehicle's charging system
	Low engine oil pressure warning light Indicates that the engine oil pressure is too low

Have the vehicle inspected by your Toyota dealer immediately.

Failure to investigate the cause of the following warnings may lead to the system operating abnormally and possibly cause an accident. Have the vehicle inspected by your Toyota dealer immediately.

Warning light	Warning light/Details
CHECK	**Malfunction indicator lamp** Indicates a malfunction in: • The emission control system; • The electronic engine control system; • The electronic throttle control system; or • The electronic automatic transmission control system
	SRS warning light Indicates a malfunction in: • The SRS airbag system; • The front passenger occupant classification system; or • The seat belt pretensioner system

Warning light	Warning light/Details
ABS (U.S.A.) (ABS) (Canada)	**ABS warning light** Indicates a malfunction in: • The ABS; or • The brake assist system
	Slip indicator Indicates a malfunction in: • The VSC system; • The TRAC (TRC) system; • The active traction control system; • The AUTO LSD system; • The downhill assist control system; • The hill-start assist control system; or • The Crawl Control system
	Power steering warning light Indicates a malfunction in the power steering system
A/T P	**Unengaged “Park” warning light (if equipped)** Indicates a malfunction in the transmission “Park” mechanism.
KDSS	**KDSS warning light (if equipped)** Indicates a malfunction in KDSS

Follow the correction procedures.

After taking the specified steps to correct the suspected problem, check that the warning light goes off.

Warning light	Warning light/Details	Correction procedure
	Open door warning light (warning buzzer)*1 Indicates that a door is not fully closed	Check that all the doors are closed.

Warning light	Warning light/Details	Correction procedure
	Low fuel level warning light Indicates remaining fuel is approximately 3.5 gal. (13.1 L, 2.9 Imp. gal.) or less	Refuel the vehicle.
	Driver's seat belt reminder light (warning buzzer)*2 Warns the driver to fasten his/her seat belt	Fasten the seat belt.
PASSENGER (On the center panel)	**Front passenger's seat belt reminder light (warning buzzer)*2** Warns the front passenger to fasten his/her seat belt	Fasten the seat belt.
	Tire pressure warning light	
	When the light comes on: Low tire inflation pressure	Adjust the tire inflation pressure.
	When the light comes on after blinking for 1 minute: Malfunction in the tire pressure warning system	Have the system checked by your Toyota dealer.
A/T OIL TEMP	**Automatic transmission fluid temperature warning light** Indicates that the automatic transmission fluid temperature is too high	Stop the vehicle in a safe place and shift the shift lever to P. If the light does not go off, contact your Toyota dealer.
(Canada)	**Low windshield washer fluid warning light** Low level of washer fluid	Fill the tank.

Warning light	Warning light/Details	Correction procedure
MAINT REQD (U.S.A.)	**Engine oil replacement reminder light**	
	Illuminates for about 3 seconds and then flashes for about 15 seconds approximately 4500 miles (7200 km) after the engine oil is changed: Indicates that the engine oil is scheduled to be changed	Check the engine oil and change if necessary.
	Comes on and remains on if the distance driven exceeds 5000 miles (8000 km): Indicates that the engine oil should be changed	Check and change the engine oil.

*1: Open door warning buzzer:

The open door warning buzzer sounds to alert one or more of the doors is not fully closed (with the vehicle having reached a speed of 3 mph [5 km/h]).

*2: Driver's and front passenger's seat belt buzzer:

The driver's and front passenger's seat belt buzzer sounds to alert the driver and front passenger that his or her seat belt is not fastened. The buzzer sounds intermittently for 10 seconds after the vehicle reaches a speed of 12 mph (20 km/h). Then, if the seat belt is still unfastened, the buzzer will sound in a different tone for 20 more seconds.

Follow the correction procedures. (vehicles with a smart key system)

After taking the specified steps to correct the suspected problem, check that the warning light goes off.

Interior buzzer	Exterior buzzer	Warning light	Warning light/Details	Correction procedure
Once	—		**Smart key system warning light** Indicates that the electronic key is not present when the “ENGINE START STOP” switch is pressed	Confirm the location of the electronic key*.
Once	3 times		**Smart key system warning light** Indicates that a door other than the driver’s door has been opened and closed with the “ENGINE START STOP” switch in any mode other than off and the electronic key has been taken out of the detection area	Confirm the location of the electronic key.
Once	3 times		**Smart key system warning light** Indicates that the driver’s door has been opened and closed with the shift lever in P, the “ENGINE START STOP” switch in any mode other than off and the electronic key has been taken out of the detection area	Turn the “ENGINE START STOP” switch off or confirm the location of the electronic key.

Interior buzzer	Exterior buzzer	Warning light	Warning light/Details	Correction procedure
Continuous	Continuous		**Smart key system warning light** Indicates that the driver's door has been opened and closed with the shift lever not in P, the "ENGINE START STOP" switch in any mode other than off and the electronic key has been taken out of the detection area	• Shift the shift lever to P. • Confirm the location of the electronic key.
Once	Sounds for 10 seconds	(Remains on for 60 seconds)	**Smart key system warning light** Indicates that the electronic key has been taken out of the vehicle and an attempt was made to lock the doors with the "ENGINE START STOP" switch in any mode other than off	Turn the "ENGINE START STOP" switch off and lock the doors again.
Once	—		**Smart key system warning light** Indicates that an attempt was made to drive when the electronic key was not present	Confirm the location of the electronic key.

*: If the engine does not start when the electronic key is inside the vehicle, the electronic key battery may be depleted or there may be difficulties receiving the signal from the key. (→P. 41)

■SRS warning light

This warning light system monitors the airbag sensor assembly, front airbag sensors, side and curtain shield airbag sensors, curtain shield airbag sensors, floor sensor, driver's seat belt buckle switch, front passenger occupant classification system, SRS airbag on-off indicator, roll sensing of curtain shield airbags off indicator, front passenger's seat belt buckle switch, seat belt pretensioner assemblies, inflators, interconnecting wiring and power sources. (→P. 115)

■Key reminder buzzer (vehicles without a smart key system)

The buzzer indicates that the key has not been removed with the engine off and the driver’s door opened.

■Open moon roof reminder buzzer (if equipped)

The buzzer indicates that the moon roof is not fully closed with the engine off and the driver’s door opened.

■Front passenger detection sensor, passenger seat belt reminder and warning buzzer

- If luggage is placed on the front passenger seat, the front passenger detection sensor may cause the warning light to flash and the warning buzzer to sound even if a passenger is not sitting in the seat.
- If a cushion is placed on the seat, the sensor may not detect a passenger, and the warning light may not operate properly.

■If the malfunction indicator lamp comes on while driving

First check the following:

- Is the fuel tank empty?
  If it is, fill the fuel tank immediately.
- Is the fuel tank cap loose?
  If it is, tighten it securely.

The light will go off after several driving trips.
If the light does not go off even after several trips, contact your Toyota dealer as soon as possible.

■Changing the engine oil (U.S.A. only)

Make sure to reset the oil change system. (→P. 501)

The tire pressure warning light may come on due to natural causes

The tire pressure warning light may come on due to natural causes such as natural air leaks and tire inflation pressure changes caused by temperature. In this case, adjusting the tire inflation pressure will turn off the warning light (after a few minutes).

When a tire is replaced with a spare tire

The spare tire is not equipped with a tire pressure warning valve and transmitter. If a tire goes flat, the tire pressure warning light will not turn off even though the flat tire has been replaced with the spare tire. Replace the spare tire with the repaired tire and adjust the tire inflation pressure. The tire pressure warning light will go off after a few minutes.

■ If the tire pressure warning system is not functioning

The tire pressure warning system will be disabled in the following conditions:

(When the condition becomes normal, the system will work properly.)

- If tires not equipped with tire pressure warning valves and transmitters are used
- If the ID code on the tire pressure warning valves and transmitters is not registered in the tire pressure warning computer
- If the tire inflation pressure is 73 psi (500 kPa, 5.1 kgf/cm^2 or bar) or higher

The tire pressure warning system may be disabled in the following conditions:

(When the condition becomes normal, the system will work properly.)

- If electronic devices or facilities using similar radio wave frequencies are nearby
- If a radio set at a similar frequency is in use in the vehicle
- If a window tint that affects the radio wave signals is installed
- If there is a lot of snow or ice on the vehicle, particularly around the wheels or wheel housings
- If non-genuine Toyota wheels are used (Even if you use Toyota wheels, the tire pressure warning system may not work properly with some types of tires.)
- If tire chains are used

■ If the tire pressure warning light comes on after flashing frequently for 1 minute

If the tire pressure warning light comes on after flashing frequently for 1 minute when the “ENGINE START STOP” switch (vehicles with a smart key system) or the engine switch (vehicles without a smart key system) is turned on, have it checked by your Toyota dealer.

■ Customization that can be configured at Toyota dealer

The vehicle speed linked seat belt reminder buzzer can be disabled. (Customizable features →P. 640) However, Toyota recommends that the seat belt reminder buzzer be operational to alert the driver and front passenger when seat belts are not fastened.

CAUTION

■ **If the tire pressure warning light comes on**

Be sure to observe the following precautions. Failure to do so could cause a loss of vehicle control and result in death or serious injury.

- Stop your vehicle in a safe place as soon as possible. Adjust the tire inflation pressure immediately.
- If the tire pressure warning light comes on even after tire inflation pressure adjustment, it is probable that you have a flat tire. Check the tires. If a tire is flat, change it with the spare tire and have the flat tire repaired by the nearest Toyota dealer.
- Avoid abrupt maneuvering and braking. If the vehicle tires deteriorate, you could lose control of the steering wheel or the brakes.

■ **If a blowout or sudden air leakage should occur**

The tire pressure warning system may not activate immediately.

CAUTION

Maintenance of the tires

Each tire, including the spare (if provided), should be checked monthly when cold and inflated to the inflation pressure recommended by the vehicle manufacturer on the vehicle placard or tire inflation pressure label (tire and load information label). (If your vehicle has tires of a different size than the size indicated on the vehicle placard or tire inflation pressure label [tire and load information label], you should determine the proper tire inflation pressure for those tires.)

As an added safety feature, your vehicle has been equipped with a tire pressure monitoring system (TPMS-tire pressure warning system) that illuminates a low tire pressure telltale (tire pressure warning light) when one or more of your tires is significantly under-inflated. Accordingly, when the low tire pressure telltale (tire pressure warning light) illuminates, you should stop and check your tires as soon as possible, and inflate them to the proper pressure. Driving on a significantly under-inflated tire causes the tire to overheat and can lead to tire failure. Under-inflation also reduces fuel efficiency and tire tread life, and may affect the vehicle's handling and stopping ability.

Please note that the TPMS (tire pressure warning system) is not a substitute for proper tire maintenance, and it is the driver's responsibility to maintain correct tire pressure, even if under-inflation has not reached the level to trigger illumination of the TPMS low tire pressure telltale (tire pressure warning light).

CAUTION

Your vehicle has also been equipped with a TPMS (tire pressure warning system) malfunction indicator to indicate when the system is not operating properly. The TPMS (tire pressure warning system) malfunction indicator is combined with the low tire pressure telltale (tire pressure warning light). When the system detects a malfunction, the telltale will flash for approximately one minute and then remain continuously illuminated. This sequence will continue upon subsequent vehicle start-ups as long as the malfunction exists. When the malfunction indicator is illuminated, the system may not be able to detect or signal low tire pressure as intended.

TPMS (tire pressure warning system) malfunctions may occur for a variety of reasons, including the installation of replacement or alternate tires or wheels on the vehicle that prevent the TPMS (tire pressure warning system) from functioning properly. Always check the TPMS (tire pressure warning system) malfunction telltale after replacing one or more tires or wheels on your vehicle to ensure that the replacement or alternate tires and wheels allow the TPMS (tire pressure warning system) to continue to function properly.

NOTICE

Precaution when installing a different tire

When a tire of a different specification or maker is installed, the tire pressure warning system may not operate properly.

Remove the flat tire and replace it with the spare tire provided.

Before jacking up the vehicle

- Stop the vehicle on a hard, flat surface.
- Set the parking brake.
- Shift the shift lever to P.
- Stop the engine.
- Turn on the emergency flashers.

Location of the spare tire, jack and tools

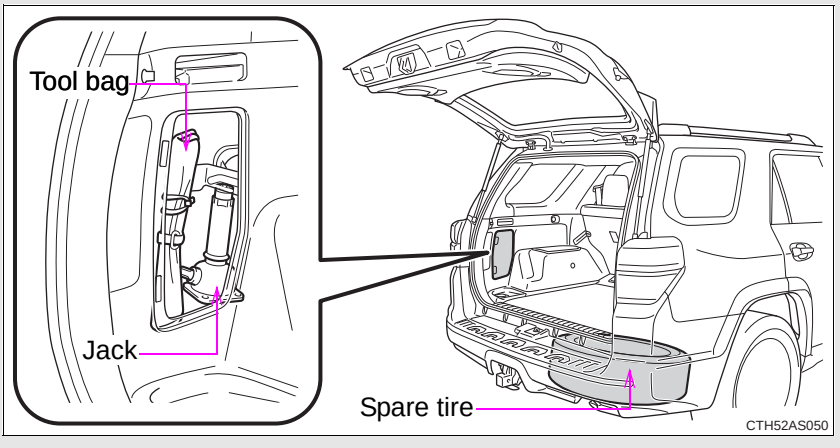

Taking out the jack and tool bag

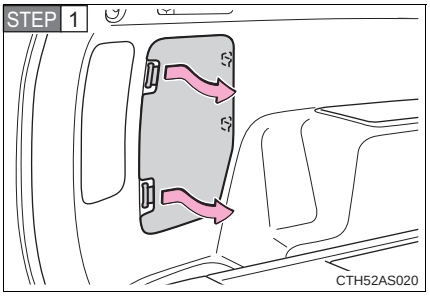

Remove the cover.

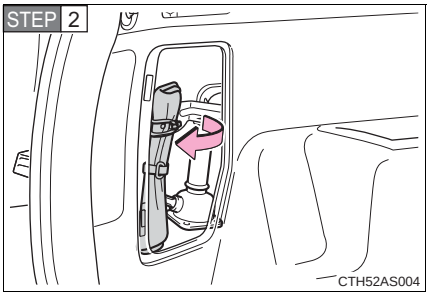

Unhook and take out the tool bag.

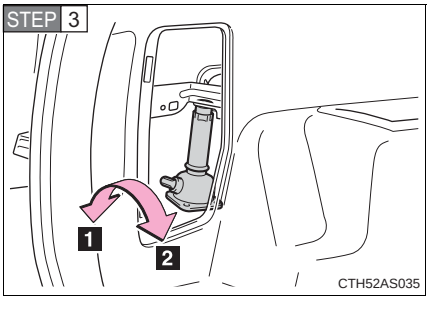

Take out the jack.

1 For loosening

2 For tightening

Taking out the spare tire

STEP 1 Assembling the jack handle.

Remove the jack handle and the jack handle extension bar from the tool bag and assembly by following these steps.

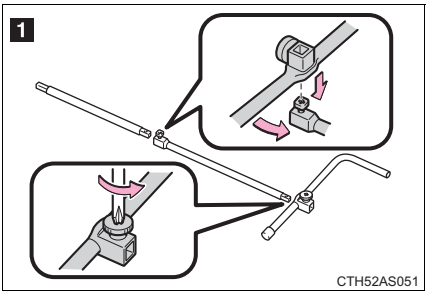

1 Loosen the bolt and the screw using either the jack handle or a screwdriver.

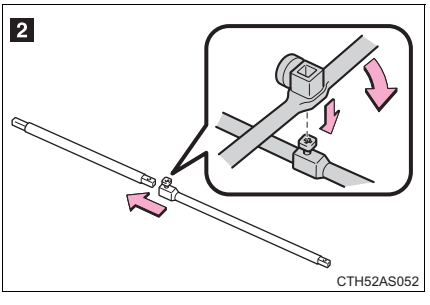

2 Assemble the jack handle extension bars and tighten the bolt.

Check that the bolt is firmly tightened.

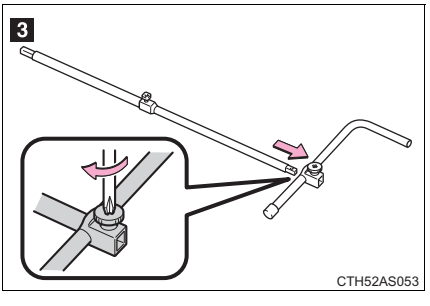

3 Assemble the jack handle and the jack handle extension bar and tighten the screw.

Check that the screw is firmly tightened.

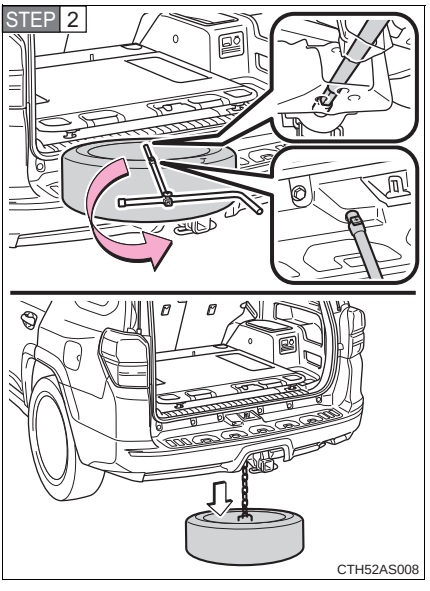

Insert the end of the jack handle extension into the lowering screw and turn it counterclockwise.

Lower the spare tire completely to the ground.

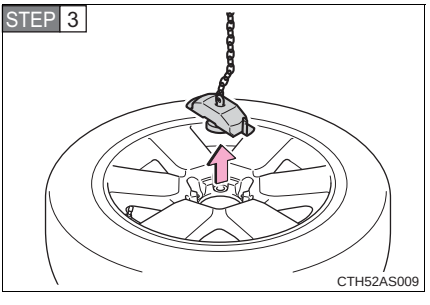

Pull out the spare tire and remove the holding bracket.

Replacing a flat tire

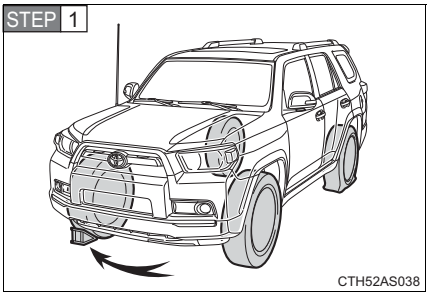

Chock the tires.

Flat tire		Wheel chock positions
Front	Left-hand side	Behind the rear right-hand side tire
	Right-hand side	Behind the rear left-hand side tire
Rear	Left-hand side	In front of the front right-hand side tire
	Right-hand side	In front of the front left-hand side tire

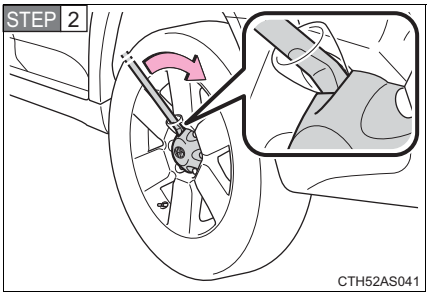

Remove the wheel ornament using the wheel ornament remover.

To protect the wheel ornament, place a rag between the wheel ornament remover and the wheel ornament, as shown in the illustration.

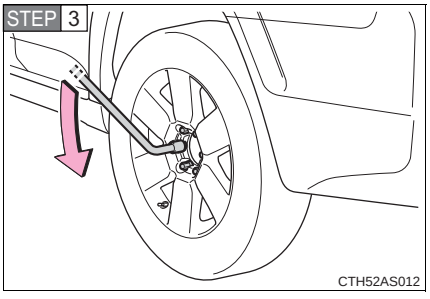

Slightly loosen the wheel nuts (one turn).

STEP 4 Assembling the jack handle.

Remove the jack handle, jack handle extension bar and jack handle bar from the tool bag and assembly by following these steps.

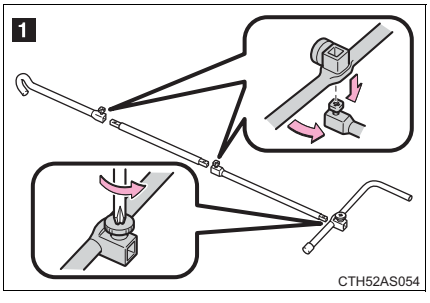

1 Loosen the bolts and the screw using either the jack handle or a screwdriver.

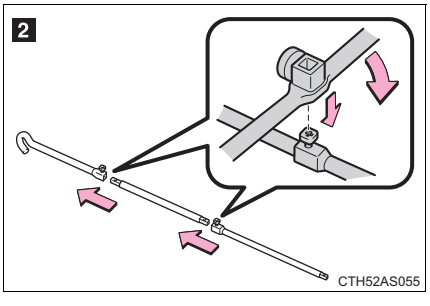

2 Assemble the jack handle extension bars and the jack handle bar and tighten the bolts.

Check that the bolts are firmly tightened.

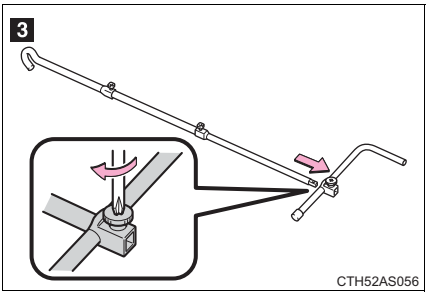

3 Assemble the jack handle extension bar and the jack handle and tighten the screw.

Check that the screw is firmly tightened.

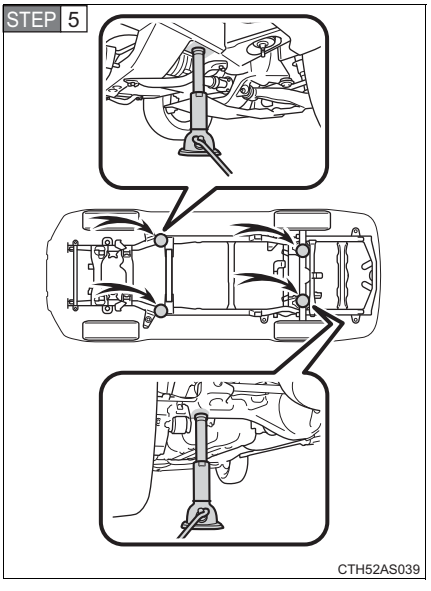

Position the jack at the jack points as shown.

Front - Under the chassis frame side rail

Rear - Under the rear axle housing

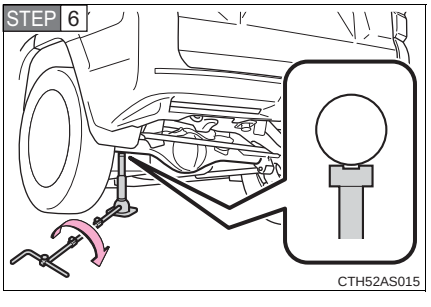

Raise the vehicle until the tire is slightly raised off the ground.

When positioning the jack under the rear axle housing, make sure the groove on the top of the jack fits with the rear axle housing.

STEP 7

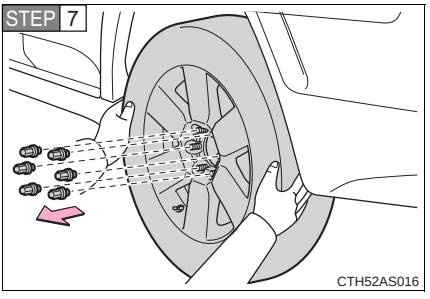

Remove all the wheel nuts and the tire.

When resting the tire on the ground, place the tire so that the wheel design faces up to avoid scratching the wheel surface.

Installing the spare tire

STEP 1

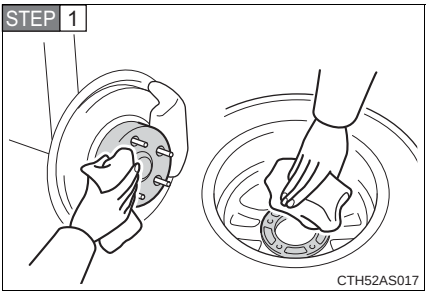

Remove any dirt or foreign matter from the wheel contact surface.

If foreign matter is on the wheel contact surface, the wheel nuts may loosen while the vehicle is in motion, causing the tire to come off.

STEP 2 Install the spare tire and loosely tighten each wheel nut by hand by approximately the same amount.

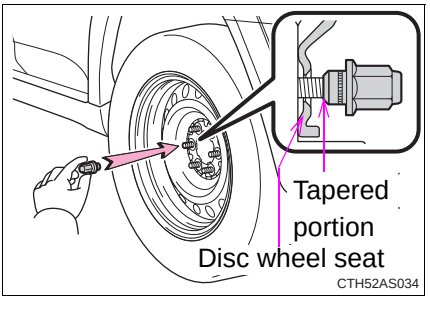

When replacing an aluminum wheel with a steel wheel, tighten the wheel nuts until the tapered portion comes into loose contact with the disc wheel seat.

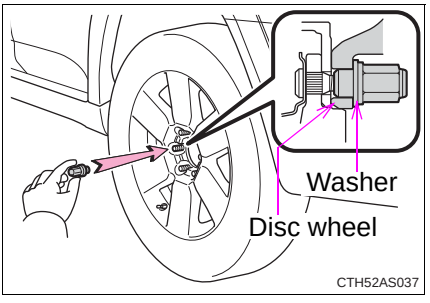

When replacing an aluminum wheel with an aluminum wheel, tighten the wheel nuts until the washers comes into contact with the disc wheel.

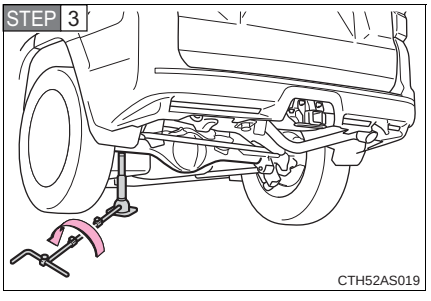

Lower the vehicle.

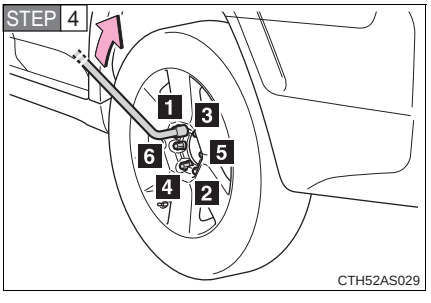

Firmly tighten each wheel nut two or three times in the order shown in the illustration.

Tightening torque:
83 ft•lbf (110 N•m, 11.5 kgf•m)

Stowing the flat/spare tire, jack and tools

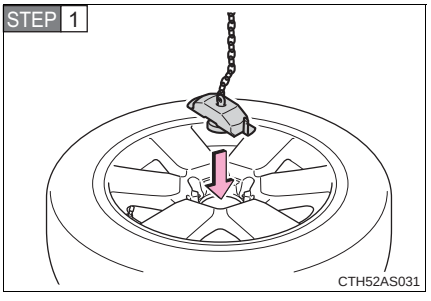

Lay down the tire with the outer side facing up, and install the holding bracket.

STEP 2 Raise the tire.

Vehicles with kinetic dynamic suspension: Pull the tire toward the rear of the vehicle when raising. After raising, visually check that tire is not interfering with components.

STEP 3 Stow the tools and jack securely, and replace the cover.

■ After completing the tire change

The tire pressure warning system must be reset. (→P. 515)

■ When using the spare tire

As the spare tire is not equipped with a tire pressure warning valve and transmitter, low inflation pressure of the spare tire will not be indicated by the tire pressure warning system. Also, if you replace the spare tire after the tire pressure warning light comes on, the light remains on.

CAUTION

■Using the tire jack

Improper use of the tire jack may cause the vehicle to suddenly fall off the jack, leading to death or serious injury.

- Do not use the tire jack for any purpose other than replacing tires or installing and removing tire chains.
- Only use the tire jack that comes with this vehicle for replacing a flat tire.
  Do not use it on other vehicles, and do not use other tire jacks for replacing tires on this vehicle.
- Always check that the tire jack is securely set to the jack point.
- Do not put any part of your body under the vehicle while it is supported by the jack.
- Do not start or run the engine while your vehicle is supported by the jack.
- Do not raise the vehicle while someone is inside.
- When raising the vehicle, do not put an object on or under the jack.
- Do not raise the vehicle to a height greater than that required to replace the tire.
- Use a jack stand if it is necessary to get under the vehicle.

Take particular care when lowering the vehicle to ensure that no one working on or near the vehicle may be injured.

CAUTION

Using the jack handle

Tighten all the jack handle bolts securely using a Phillips-head screwdriver, to prevent the extension parts from coming apart unexpectedly.

Replacing a flat tire

Observe the following precautions to reduce the risk of death or serious injury.

- Lower the spare tire completely to the ground before removing it from under the vehicle.
- Do not try to remove the wheel ornament by hand. Take due care in handling the ornament to avoid unexpected personal injury.
- Never use oil or grease on the wheel bolts or wheel nuts.
  Oil and grease may cause the wheel nuts to be excessively tightened, leading to bolt or disc wheel damage. In addition, the oil or grease can cause the wheel nuts to loosen and the wheel may fall off, causing a serious accident. Remove any oil or grease from the wheel bolts or wheel nuts.
- Have the wheel nuts tightened with a torque wrench to 83 ft•lbf (110 N•m, 11.5 kgf•m) as soon as possible after changing wheels.
- Do not attach a heavily damaged wheel ornament, as it may fly off the wheel while the vehicle is moving.
- When installing a tire, only use wheel nuts that have been specifically designed for that wheel.
- If there are any cracks or deformations in the bolt screws, nut threads or bolt holes of the wheel, have the vehicle inspected by your Toyota dealer.

Failure to follow these precautions could cause the wheel nuts to loosen and the tire to fall off, resulting in death or serious injury.

NOTICE

Do not drive the vehicle with a flat tire

Do not continue driving with a flat tire.
Driving even a short distance with a flat tire can damage the tire and the wheel beyond repair.

When stowing the flat tire

Ensure that there is no object caught between the tire and the vehicle underbody.

When replacing the tires

- When removing or fitting the wheels, tires or the tire pressure warning valve and transmitter, contact your Toyota dealer as the tire pressure warning valve and transmitter may be damaged if not handled correctly.
- Replace the grommets for the tire pressure warning valves and transmitters as well.

To avoid damage the tire pressure warning valves and transmitters

Do not use liquid sealants on flat tires.

If the engine will not start

If the engine will not start even though correct starting procedures are being followed (→P. 164, 167), consider each of the following points:

The engine will not start even though the starter motor operates normally.

One of the following may be the cause of the problem:

- There may not be sufficient fuel in the vehicle's tank.
  Refuel the vehicle.
- The engine may be flooded.
  Try to restart the engine again following correct starting procedures. (→P. 164, 167)
- There may be a malfunction in the engine immobilizer system. (→P. 106)

The starter motor turns over slowly, the interior lights and headlights are dim, or the horn does not sound or sounds at a low volume.

One of the following may be the cause of the problem:

- The battery may be discharged. (→P. 599)
- The battery terminal connections may be loose or corroded.

The starter motor does not turn over.

The engine starting system may be malfunctioning due to an electrical problem such as an open circuit or a blown fuse. However, an interim measure is available to start the engine. (→P. 592)

■ **The starter motor does not turn over, the interior lights and headlights do not turn on, or the horn does not sound.**

One of the following may be the cause of the problem:

- One or both of the battery terminals may be disconnected.
- The battery may be discharged. (→P. 599)
- There may be a malfunction in the steering lock system. (vehicles with a smart key system)

  Contact your Toyota dealer if the problem cannot be repaired, or if repair procedures are unknown.

Emergency start function (vehicles with a smart key system)

When the engine does not start, the following steps can be used as an interim measure to start the engine if the “ENGINE START STOP” switch is functioning normally:

STEP 1 Set the parking brake.

STEP 2 Shift the shift lever to P.

STEP 3 Turn the “ENGINE START STOP” switch to ACCESSORY mode.

STEP 4 Press and hold the “ENGINE START STOP” switch for about 15 seconds while depressing the brake pedal firmly.

Even if the engine can be started using the above steps, the system may be malfunctioning. Have the vehicle inspected by your Toyota dealer.

If the shift lever cannot be shifted from P

If the shift lever cannot be shifted with your foot on the brake pedal, there may be a problem with the shift lock system (a system to prevent accidental operation of the shift lever). Have the vehicle inspected by your Toyota dealer immediately.

The following steps may be used as an emergency measure to ensure that the shift lever can be shifted:

STEP 1 Set the parking brake.

STEP 2 Vehicles with a smart key system: Turn the “ENGINE START STOP” switch to ACCESSORY mode.

Vehicles without a smart key system: Turn the engine switch to the “ACC” position.

STEP 3 Depress the brake pedal.

Standard type

STEP 4

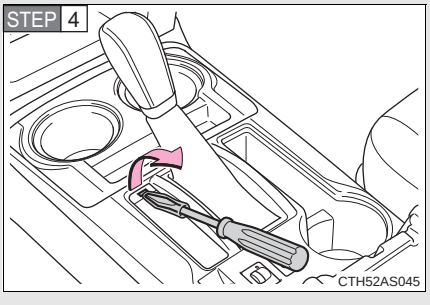

Pry the cover up with a flat-head screwdriver or equivalent tool.

STEP 5

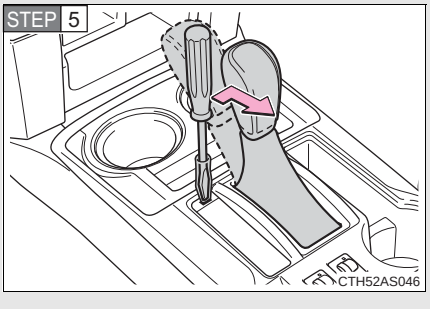

Press the shift lock override button.

The shift lever can be shifted while the button is pressed.

Multi-mode type

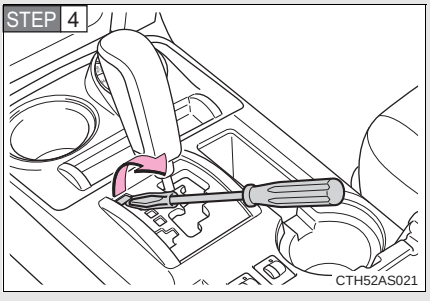

Pry the cover up with a flat-head screwdriver or equivalent tool.

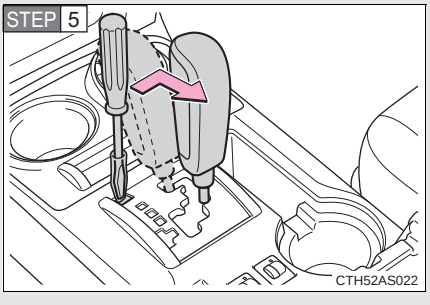

Press the shift lock override button.

The shift lever can be shifted while the button is pressed.

If you lose your keys

New genuine keys can be made by your Toyota dealer. For vehicles with the smart key system, bring the other key and the key number stamped on the key number plate. For vehicles without the smart key system, bring a master key and the key number stamped on the key number plate.

If you cannot operate back door opener

If the back door opener does not operate, there may be a problem with the back door opener system. Have the vehicle inspected by your Toyota dealer immediately.
The following steps may be used as an emergency measure to ensure that the back door can be opened from the inside.

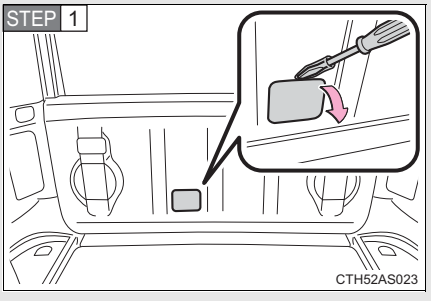

Remove the cover on the back door trim.

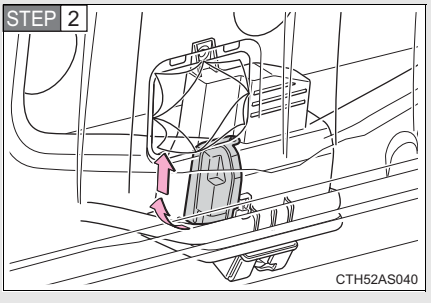

Tear the plastic film. Remove the cover.

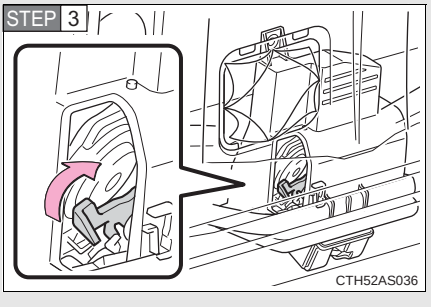

Pull the lever.

If communication between the electronic key and vehicle is interrupted (→P. 41) or the electronic key cannot be used because the battery is depleted, the smart key system and wireless remote control cannot be used. In such cases, the doors can be opened and the engine can be started by following the procedure below.

Locking and unlocking the doors

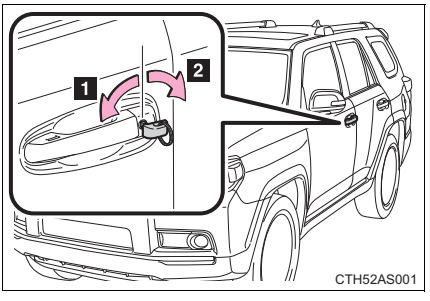

Use the mechanical key (→P. 31) in order to perform the following operations:

1 Locks all doors

2 Unlocks all doors
Turning the key rearward unlocks the driver's door. Turning the key once again unlocks the other doors.

Changing “ENGINE START STOP” switch modes and starting the engine

STEP 1 Ensure that the shift lever is in P and depress the brake pedal.

STEP 2

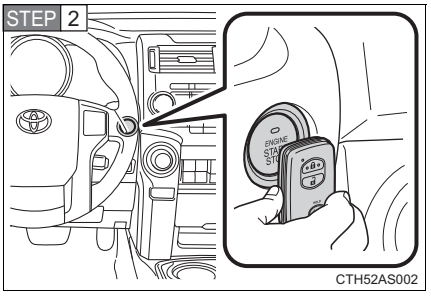

Touch the Toyota emblem side of the electronic key to the “ENGINE START STOP” switch.

If any of the doors is opened or closed while the key is being touched to the switch, an alarm will sound to indicate that the start function cannot detect the key.

STEP 3 To change “ENGINE START STOP” switch modes: Within 10 seconds of the buzzer sounding, release the brake pedal and press the “ENGINE START STOP” switch. Modes can be changed each time the switch is pressed. (→P. 168)

To start the engine: Press the “ENGINE START STOP” switch within 10 seconds of the buzzer sounding, keeping the brake pedal depressed.

In the event that the “ENGINE START STOP” switch cannot be operated, contact your Toyota dealer.

■ Stopping the engine

Shift the shift lever to P and press the “ENGINE START STOP” switch as you normally do when stopping the engine.

■ Replacing the key battery

As the above procedure is a temporary measure, it is recommended that the electronic key battery be replaced immediately when the battery is depleted. (→P. 529)

If the vehicle battery is discharged

The following procedures may be used to start the engine if the vehicle's battery is discharged.
You can also call your Toyota dealer or a qualified repair shop.

If you have a set of jumper (or booster) cables and a second vehicle with a 12-volt battery, you can jump start your vehicle by following the steps below.

2.7 L 4-cylinder (2TR-FE) engine

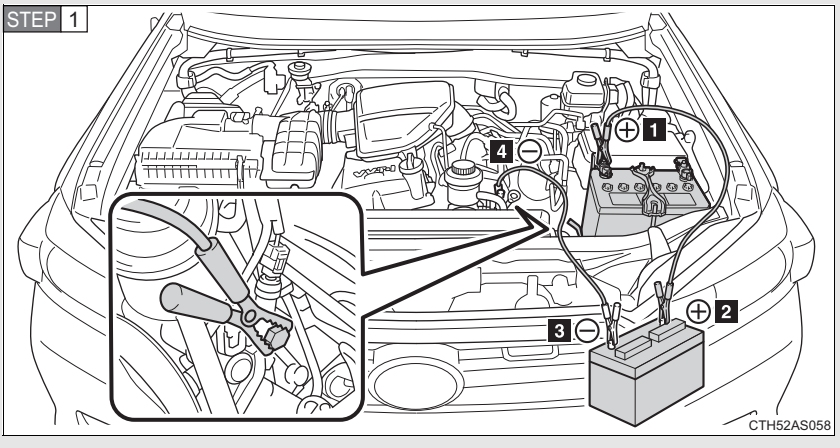

4.0 L V6 (1GR-FE) engine

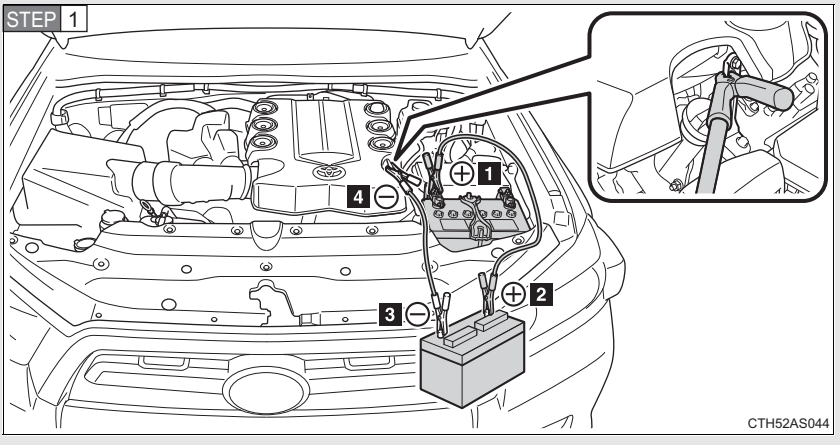

Connect the jumper cables according to the following procedure:

1. Connect a positive jumper cable clamp to the positive (+) battery terminal on your vehicle.
2. Connect the clamp on the other end of the positive cable to the positive (+) battery terminal on the second vehicle.
3. Connect a negative cable clamp to the negative (-) battery terminal on the second vehicle.
4. Connect the clamp at the other end of the negative cable to a solid, stationary, unpainted metallic point away from the battery and any moving parts, as shown in the illustration.

STEP 2 Start the engine of the second vehicle. Increase the engine speed slightly and maintain at that level for approximately 5 minutes to recharge the battery of your vehicle.

STEP 3 Vehicles with a smart key system only: Open and close any of the doors of your vehicle with the “ENGINE START STOP” switch off.

STEP 4 Maintain the engine speed of the second vehicle and start the engine of your vehicle by turning the “ENGINE START STOP” switch to IGNITION ON mode (vehicles with a smart key system) or turning the engine switch to the “ON” position (vehicles without a smart key system).

STEP 5 Once the vehicle’s engine has started, remove the jumper cables in the exact reverse order from which they were connected.

Once the engine starts, have the vehicle inspected at your Toyota dealer as soon as possible.

■ **Starting the engine when the battery is discharged**

The engine cannot be started by push-starting.

■ **To prevent battery discharge**

- Turn off the headlights and the audio system while the engine is off.
- Turn off any unnecessary electrical components when the vehicle is running at a low speed for an extended period, such as in heavy traffic.

■ **Precautions when the battery is discharged (vehicles with a smart key system)**

- In some cases, it may not be possible to unlock the doors using the smart key system when the battery is discharged. Use the wireless remote control or the mechanical key to lock or unlock the doors.
- The engine may not start on the first attempt after the battery has recharged but will start normally after the second attempt. This is not a malfunction.
- The “ENGINE START STOP” switch mode is memorized by the vehicle. When the battery is reconnected, the system will return to the mode it was in before the battery was discharged. Before disconnecting the battery, turn the “ENGINE START STOP” switch off.
  If you are unsure what mode the “ENGINE START STOP” switch was in before the battery discharged, be especially careful when reconnecting the battery.

CAUTION

■ Avoiding battery fires or explosions

Observe the following precautions to prevent accidentally igniting the flammable gas that may be emitted from the battery:

- Make sure each jumper cable is connected to the correct terminal and that it is not unintentionally in contact with any other than the intended terminal.
- Do not allow the + and - clamps of the jumper cables to come into contact with each other.
- Do not smoke, use matches, cigarette lighters or allow open flame near the battery.

■ Battery precautions

The battery contains poisonous and corrosive acidic electrolyte, while related parts contain lead and lead compounds. Observe the following precautions when handling the battery:

- When working with the battery, always wear safety glasses and take care not to allow any battery fluids (acid) to come into contact with skin, clothing or the vehicle body.
- Do not lean over the battery.
- In the event that battery fluid comes into contact with the skin or eyes, immediately wash the affected area with water and seek medical attention. Place a wet sponge or cloth over the affected area until medical attention can be received.
- Always wash your hands after handling the battery support, terminals, and other battery-related parts.
- Do not allow children near the battery.

NOTICE

■ When handling jumper cables

When connecting the jumper cables, ensure that they do not become entangled in the cooling fans or belt.

If your vehicle overheats

If your engine overheats:

STEP 1 Stop the vehicle in a safe place and turn off the air conditioning system.

STEP 2 Check to see if steam is coming out from under the hood.

If you see steam:
Stop the engine. Carefully lift the hood after the steam subsides and then restart the engine.

If you do not see steam:
Leave the engine running and carefully lift the hood.

STEP 3 Remove the engine compartment cover. (→P. 497)

STEP 4 Check to see if the cooling fan is operating.

If the fan is operating:
Wait until the temperature of the engine (shown on the instrument panel) begins to fall and then stop the engine.

If the fan is not operating:
Stop the engine immediately and call your Toyota dealer.

STEP 5

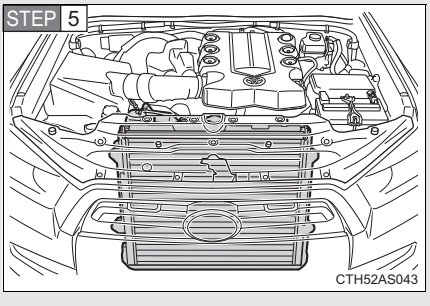

After the engine has cooled down sufficiently, check the engine coolant level and inspect the radiator core (radiator) for any leaks.

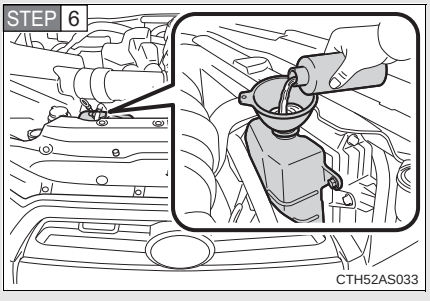

Add engine coolant if necessary.

Water can be used in an emergency if engine coolant is unavailable. (→P. 618)

Have the vehicle inspected at the nearest Toyota dealer as soon as possible.

Overheating

If you observe the following, your vehicle may be overheating:

- The engine coolant temperature gauge enters the red zone or a loss of power is experienced.
- Steam comes out from under the hood.

CAUTION

To prevent an accident or injury when inspecting under the hood of your vehicle

- If steam is seen coming from under the hood, do not open the hood until the steam has subsided. The engine compartment may be very hot, causing serious injuries such as burns.
- Keep hands and clothing away from the fan and drive belt while the engine is running.
- Do not loosen the radiator cap, or coolant reservoir cap while the engine and radiator are hot.
  Serious injury, such as burns, may result from hot coolant and steam released under pressure.

NOTICE

When adding engine coolant

Wait until the engine has cooled down before adding engine coolant.
When adding coolant, do so slowly. Adding cool coolant to a hot engine too quickly can cause damage to the engine.

If the vehicle becomes stuck

Carry out the following procedures if the tires spin or the vehicle becomes stuck in mud, dirt or snow:

STEP 1 Stop the engine. Set the parking brake and shift the shift lever to P.

STEP 2 Remove the mud, snow or sand from around the stuck tire.

STEP 3 Place wood, stones or some other material under the tires to help provide traction.

STEP 4 Restart the engine.

STEP 5 Shift the shift lever to the D or R position and carefully apply the accelerator to free the vehicle.

Turn off TRAC (TRC) and VSC if these functions are hampering your attempts to free the vehicle. (→P. 255)

CAUTION

■When attempting to free a stuck vehicle

If you choose to push the vehicle back and forth to free it, make sure the surrounding area is clear to avoid striking other vehicles, objects or people. The vehicle may also lunge forward or lunge back suddenly as it becomes free. Use extreme caution.

■When shifting the shift lever

Be careful not to shift the shift lever with the accelerator pedal depressed. This may lead to unexpected rapid acceleration of the vehicle that may cause an accident resulting in death or serious injury.

NOTICE

■To avoid damage to the transmission and other components

- Avoid spinning the wheels and depressing the accelerator pedal more than necessary.
- If the vehicle remains stuck even after these procedures are performed, the vehicle may require towing to be freed.

If your vehicle has to be stopped in an emergency

Only in an emergency, such as if it becomes impossible to stop the vehicle in the normal way, stop the vehicle using the following procedure:

STEP 1 Steadily step on the brake pedal with both feet and firmly depress it.

Do not pump the brake pedal repeatedly as this will increase the effort required to slow the vehicle.

STEP 2 Shift the shift lever to N.

If the shift lever is shifted to N

STEP 3 After slowing down, stop the vehicle in a safe place by the road.

STEP 4 Stop the engine.

If the shift lever cannot be shifted to N

STEP 3 Keep depressing the brake pedal with both feet to reduce vehicle speed as much as possible.

STEP 4

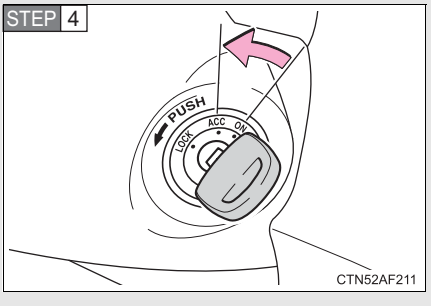

Vehicles without a smart key system: Stop the engine by turning the engine switch to “ACC”.

STEP 4

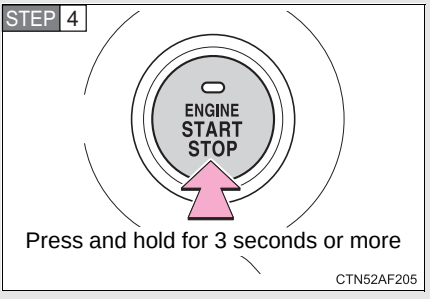

Vehicles with a smart key system: Stop the engine by pressing and holding the “ENGINE START STOP” switch for 3 consecutive seconds or more.

STEP 5 Stop the vehicle in a safe place by the road.

CAUTION

■If the engine has to be turned off while driving

- Power assist for the brakes and steering wheel will be lost, making the brake pedal harder to depress and the steering wheel heavier to turn. Decelerate as much as possible before turning off the engine.
- Vehicles without a smart key system: Never attempt to remove the key, as doing so will lock the steering wheel.

Vehicle specifications

6

6-1. Specifications

Maintenance data (fuel, oil level, etc.) 612

Fuel information 625

Tire information 628

6-2. Customization

Customizable features 640

6-3. Initialization

Items to initialize 646

Dimensions and weights

Overall length		189.8 in. (4820 mm)
Overall width		75.8 in. (1925 mm)
Overall height *1		70.1 in. (1780 mm)
Wheelbase		109.8 in. (2790 mm)
Tread	Front	63.2 in. (1605 mm)
	Rear	63.2 in. (1605 mm)
Vehicle capacity weight (Occupants + luggage)		825 lb. (370 kg) *2 1155 lb. (520 kg) *3
Towing capacity (trailer weight + cargo weight)		**2.7 L 4-cylinder (2TR-FE) engine** 2000 lb. (907 kg) **4.0 L V6 (1GR-FE) engine** 5000 lb. (2270 kg)
Luggage compartment load capacity		970 lb. (445 kg) *2 670 lb. (309 kg) *3

*1: Unladen vehicle
*2: With 5 occupants
*3: With 7 occupants

Vehicle identification

■ Vehicle identification number

The vehicle identification number (VIN) is the legal identifier for your vehicle. This is the primary identification number for your Toyota. It is used in registering the ownership of your vehicle.

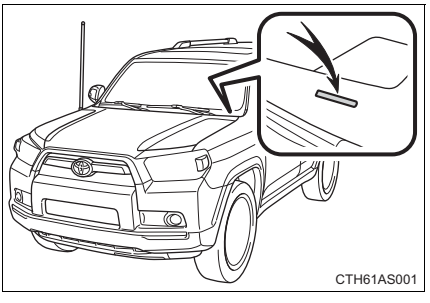

This number is stamped on the top left of the instrument panel.

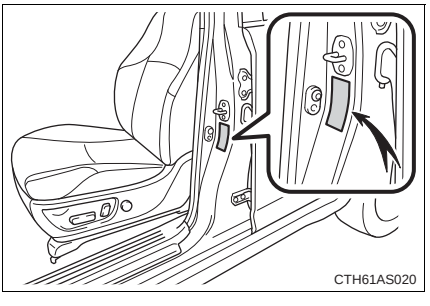

This number is also on the Certification Label.

■ Engine number

2.7 L 4-cylinder (2TR-FE) engine

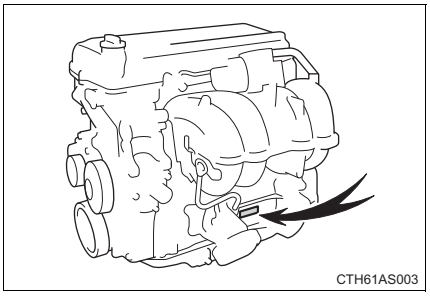

The engine number is stamped on the engine block as shown.

4.0 L V6 (1GR-FE) engine

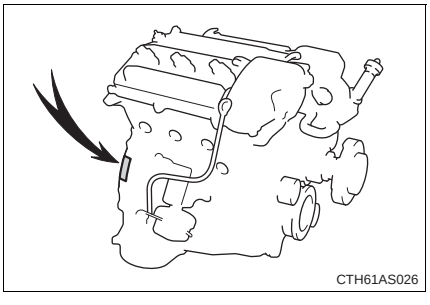

The engine number is stamped on the engine block as shown.

Engine

▶ 2.7 L 4-cylinder (2TR-FE) engine

Model	2TR-FE
Type	4-cylinder in line, 4-cycle, gasoline
Bore and stroke	3.74 × 3.74 in. (95.0 × 95.0 mm)
Displacement	164.4 cu.in. (2694 cm^3)
Drive belt tension	Automatic adjustment
Valve clearance (engine cold)	Automatic adjustment

▶ 4.0 L V6 (1GR-FE) engine

Model	1GR-FE
Type	6-cylinder V type, 4-cycle, gasoline
Bore and stroke	3.70 × 3.74 in. (94.0 × 95.0 mm)
Displacement	241.4 cu.in. (3956 cm^3)
Valve clearance (engine cold)	Automatic adjustment
Drive belt tension	Automatic adjustment

Fuel

Fuel type	Unleaded gasoline only
Octane rating	87 (Research octane number 91) or higher
Fuel tank capacity (Reference)	23.0 gal. (87.0 L, 19.1 Imp. gal.)

Lubrication system

Oil capacity (Drain and refill — reference)	
With filter	**2.7 L 4-cylinder (2TR-FE) engine** 6.1 qt. (5.8 L, 5.1 Imp. qt.) **4.0 L V6 (1GR-FE) engine** 6.6 qt. (6.2 L, 5.5 Imp. qt.)
Without filter	**2.7 L 4-cylinder (2TR-FE) engine** 5.4 qt. (5.1 L, 4.5 Imp. qt.) **4.0 L V6 (1GR-FE) engine** 6.0 qt. (5.7 L, 5.0 Imp. qt.)

■ Engine oil selection

“Toyota Genuine Motor Oil” is used in your Toyota vehicle. Use Toyota approved “Toyota Genuine Motor Oil” or equivalent to satisfy the following grade and viscosity.

Oil grade: ILSAC multigrade engine oil

Recommended viscosity: SAE 0W-20

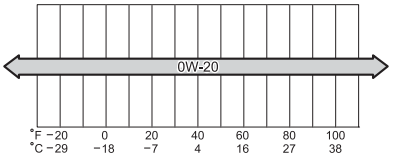

Outside temperature

CTH61AS015

SAE 0W-20 is the best choice for good fuel economy and good starting in cold weather.

If SAE 0W-20 is not available, SAE 5W-20 oil may be used. However, it must be replaced with SAE 0W-20 at the next oil change.

The 0W portion of the oil viscosity rating indicates the characteristic of the oil which allows cold startability. Oils with a lower value before the W allow for easier starting of the engine in cold weather.

The 20 in 0W-20 indicates the oil viscosity when the oil is at its operating temperature. An oil with a higher viscosity may be better suited if the vehicle is operated at high speeds, or under extreme load conditions.

How to read oil container label:

The ILSAC (International Lubricant Standardization and Approval Committee) Certification Mark is added to some oil containers to help you select the oil you should use.

CTH61AS018

Cooling system

Capacity	**2.7 L 4-cylinder (2TR-FE) engine** 8.6 qt. (8.1 L, 7.1 Imp. qt.) **4.0 L V6 (1GR-FE) engine** 11.1 qt. (10.5 L, 9.2 Imp. qt.)
Coolant type	Use either of the following: • “Toyota Super Long Life Coolant” • A similar high-quality ethylene glycol-based non-silicate, non-amine, non-nitrite, and non-borate coolant with long-life hybrid organic acid technology Do not use plain water alone.

Ignition system

Spark plug	
Make	DENSO SK20HR11
Gap	0.043 in. (1.1 mm)

NOTICE

Iridium-tipped spark plugs

Use only iridium-tipped spark plugs. Do not adjust the spark plug gap.

Electrical system

Battery Open voltage* at 68°F (20°C):	12.6 — 12.8 V Fully charged 12.2 — 12.4 V Half charged 11.8 — 12.0 V Discharged (*: Voltage checked 20 minutes after the engine and all the lights are turned off.)
Charging rates	5 A max.

Transfer (4WD models)

Oil capacity	**Part-time 4WD models** 1.1 qt. (1.0 L, 0.9 Imp. qt.) **Full-time 4WD models** 1.5 qt. (1.4 L, 1.2 Imp. qt.)
Oil type*	Toyota Genuine Transfer gear oil LF or equivalent
Recommended oil viscosity	SAE 75W

*: “Toyota Genuine Transfer Gear oil LF” is put in your Toyota vehicle at the factory. Use Toyota approved “Toyota Genuine Transfer Gear oil LF” or an equivalent of matching quality to satisfy the above specification. Please contact your Toyota dealer for further details.

Front differential (4WD models)

Oil capacity	**Part-time 4WD models** 1.6 qt. (1.55 L, 1.4 Imp. qt.) **Full-time 4WD models** 1.5 qt. (1.40 L, 1.2 Imp. qt.)
Oil type and viscosity*	Toyota Genuine Differential gear oil LT 75W-85 GL-5 or equivalent

*: “Toyota Genuine Differential Gear Oil” is put in your Toyota vehicle at the factory. Use Toyota approved “Toyota Genuine Differential Gear Oil” or an equivalent of matching quality to satisfy the above specification. Please contact your Toyota dealer for further details.

Rear differential

Oil capacity	**Vehicles without a rear differential lock** 2.9 qt. (2.70 L, 2.4 Imp. qt.) **Vehicles with a rear differential lock** 2.8 qt. (2.65 L, 2.3 Imp. qt.)
Oil type and viscosity*	Toyota Genuine Differential gear oil LT 75W-85 GL-5 or equivalent

*: “Toyota Genuine Differential Gear Oil” is put in your Toyota vehicle at the factory. Use Toyota approved “Toyota Genuine Differential Gear Oil” or an equivalent of matching quality to satisfy the above specification. Please contact your Toyota dealer for further details.

Automatic transmission

Fluid capacity*	**2.7 L 4-cylinder (2TR-FE) engine** 10.5 qt. (9.9 L, 8.7 Imp. qt.) **4.0 L V6 (1GR-FE) engine** 11.3 qt. (10.7 L, 9.4 Imp. qt.)
Fluid type	Toyota Genuine ATF WS

*: The fluid capacity is a reference quantity. If replacement is necessary, contact your Toyota dealer.

NOTICE

Transmission fluid type

Using transmission fluid other than “Toyota Genuine ATF WS” may cause deterioration in shift quality, locking up of the transmission accompanied by vibration and, ultimately, damage to the vehicle’s transmission.

Brakes

Pedal clearance *1	3.62 in. (92 mm) Min.
Pedal free play	Less than 0.04 — 0.24 in. (1 — 6 mm)
Brake pad wear limit	0.04 in. (1.0 mm)
Parking brake lining wear limit	0.04 in. (1.0 mm)
Parking brake pedal travel *2	5 — 7 clicks
Fluid type	SAE J1703 or FMVSS No. 116 DOT 3

*1: Minimum pedal clearance when depressed with a force of 110 lbf (490 N, 50 kgf) while the engine is running.

*2: Parking brake pedal travel when depressed with a force of 67 lbf (300 N, 30 kgf).

Chassis lubrication

Propeller shafts Spider Slide yoke	Lithium base chassis grease, NLGI No.2 Molybdenum-disulfide lithium base chassis grease, NLGI No.2 or lithium base multipurpose grease, NLGI No.2

Steering

Free play	Less than 1.2 in. (30 mm)
Power steering fluid type	Automatic transmission fluid DEXRON® II or III

Tires and wheels

2.7 L 4-cylinder (2TR-FE) engine

Tire size	P265/70R17 113S
Tire inflation pressure (Recommended cold tire inflation pressure)	Front: 33 psi (230 kPa, 2.3 kgf/cm^2 or bar) Rear: 33 psi (230 kPa, 2.3 kgf/cm^2 or bar) Spare: 33 psi (230 kPa, 2.3 kgf/cm^2 or bar)
Wheel size	17 × 7J
Wheel nut torque	83 ft•lbf (110 N•m, 11.5 kgf•m)

4.0 L V6 (1GR-FE) engine

Tire size	P265/70R17 113S, P245/60R20 107H
Tire inflation pressure (Recommended cold tire inflation pressure)	Front: 32 psi (220 kPa, 2.2 kgf/cm^2 or bar) Rear: 32 psi (220 kPa, 2.2 kgf/cm^2 or bar) Spare: 32 psi (220 kPa, 2.2 kgf/cm^2 or bar)
Wheel size	17 × 7J, 17 × 7 1/2J, 20 × 7J
Wheel nut torque	83 ft•lbf (110 N•m, 11.5 kgf•m)

Light bulbs

	Light Bulbs	Bulb No.	W	Type
Exterior	Headlights Low beam High beam	 — —	 55 60	 A B
	Front turn signal and daytime running lights	1156NA	27	C
	Parking lights and front side marker lights	—	5	D
	Fog lights*	—	55	A
	Rear turn signal lights	—	21	E
	Back-up lights	—	16	D
	License plate lights	—	5	D
	Stop/tail and rear side marker lights	7443	21/5	D
	Outer foot lights*	—	5	D
Interior	Front personal/ front interior lights	—	5	D
	Rear interior light	—	8	F
	Vanity lights	—	8	D
	Door courtesy lights	168	5	D
	Luggage compartment lights	—	8	F

*: If equipped

A: H11 halogen bulbs
B: HB3 halogen bulbs
C: Single end bulbs (amber)
D: Wedge base bulbs (clear)
E: Wedge base bulbs (amber)
F: Double end bulbs

Fuel information

You must only use unleaded gasoline in your vehicle.
Select octane rating 87 (Research Octane Number 91) or higher. Use of unleaded gasoline with an octane rating lower than 87 may result in engine knocking. Persistent knocking can lead to engine damage.

At minimum, the gasoline you use should meet the specifications of ASTM D4814 in the U.S.A. and CGSB3.5-M93 in Canada.

Fuel tank opening for unleaded gasoline

To help prevent incorrect fueling, your Toyota has a fuel tank opening that only accommodates the special nozzle on unleaded fuel pumps.

Gasoline quality

In very few cases, driveability problems may be caused by the brand of gasoline you are using. If driveability problems persist, try changing the brand of gasoline. If this does not correct the problem, consult your Toyota dealer.

Gasoline quality standards

- Automotive manufacturers in the U.S.A., Europe and Japan have developed a specification for fuel quality called the World-Wide Fuel Charter (WWFC), which is expected to be applied worldwide.
- The WWFC consists of four categories that are based on required emission levels. In the U.S., category 4 has been adopted.
- The WWFC improves air quality by lowering emissions in vehicle fleets, and improves customer satisfaction through better performance.

Recommendation of the use of gasoline containing detergent additives

- Toyota recommends the use of gasoline that contains detergent additives to avoid the build-up of engine deposits.
- All gasoline sold in the U.S.A. contains detergent additives to clean and/or keep clean intake systems.

Recommendation of the use of cleaner burning gasoline

Cleaner burning gasoline, including reformulated gasoline that contains oxygenates such as ethanol or MTBE (Methyl Tertiary Butyl Ether) is available in many areas.

Toyota recommends the use of cleaner burning gasoline and appropriately blended reformulated gasoline. These types of gasoline provide excellent vehicle performance, reduce vehicle emissions and improve air quality.

Non-recommendation of the use of blended gasoline

- Toyota allows the use of oxygenate blended gasoline where the oxygenate content is up to 10% ethanol or 15% MTBE.
- If you use gasohol in your vehicle, be sure that it has an octane rating no lower than 87.
- Toyota does not recommend the use of gasoline containing methanol.

Non-recommendation of the use of gasoline containing MMT

Some gasoline contains an octane enhancing additive called MMT (Methylcyclopentadienyl Manganese Tricarbonyl).

Toyota does not recommend the use of gasoline that contains MMT. If fuel containing MMT is used, your emission control system may be adversely affected.

The malfunction indicator lamp on the instrument cluster may come on. If this happens, contact your Toyota dealer for service.

If your engine knocks

- Consult your Toyota dealer.
- You may occasionally notice light knocking for a short time while accelerating or driving uphill. This is normal and there is no need for concern.

NOTICE

Notice on fuel quality

- Do not use improper fuels. If improper fuels are used, the engine will be damaged.
- Do not use leaded gasoline.
  Leaded gasoline can cause damage to your vehicle's three-way catalytic converters causing the emission control system to malfunction.
- Do not use gasohol other than the type previously stated.
  Other gasohol may cause fuel system damage or vehicle performance problems.
- Using unleaded gasoline with an octane number or rating lower than the level previously stated will cause persistent heavy knocking.
  At worst, this will lead to engine damage.

Fuel-related poor driveability

If poor driveability is encountered after using a different type of fuel (poor hot starting, vaporization, engine knocking, etc.), discontinue the use of that type of fuel.

When refueling with gasohol

Take care not to spill gasohol. It can damage your vehicle's paint.

Typical tire symbols

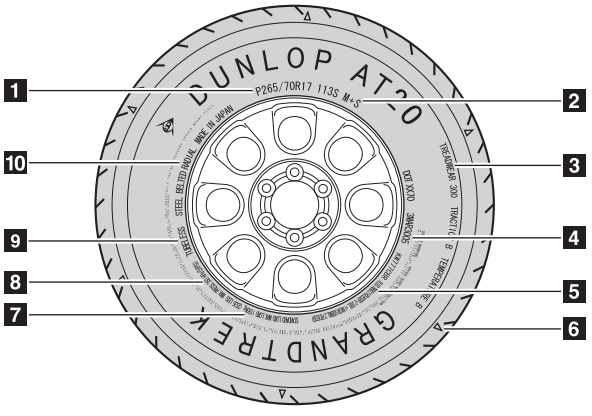

CTH61AS021

1 Tire size (→P. 630)

2 Summer tire or all season tires (→P. 517)

An all season tire has “M+S” on the sidewall. A tire not marked “M+S” is a summer tire.

3 Uniform tire quality grading

For details, see “Uniform Tire Quality Grading” that follows.

4 DOT and Tire Identification Number (TIN) (→P. 629)

5 Tire ply composition and materials

Plies are layers of rubber-coated parallel cords. Cords are the strands which form the plies in a tire.

6 Location of treadwear indicators (→P. 514)

7 Load limit at maximum cold tire inflation pressure (→P. 516)

8 Maximum cold tire inflation pressure (→P. 623)

This means the pressure to which a tire may be inflated.

9 TUBELESS or TUBE TYPE

A tubeless tire does not have a tube and air is directly put into the tire. A tube type tire has a tube inside the tire and the tube maintains the air pressure.

10 Radial tires or bias-ply tires

A radial tire has “RADIAL” on the sidewall. A tire not marked “RADIAL” is a bias-ply tire.

Typical DOT and Tire Identification Number (TIN)

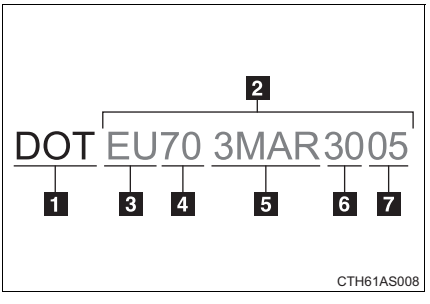

1 DOT symbol*

2 Tire Identification Number (TIN)

3 Tire manufacturer’s identification mark

4 Tire size code

5 Manufacturer’s optional tire type code (3 or 4 letters)

6 Manufacturing week

7 Manufacturing year

*: The DOT symbol certifies that the tire conforms to applicable Federal Motor Vehicle Safety Standards.

Tire size

Typical tire size information

The illustration indicates typical tire size.

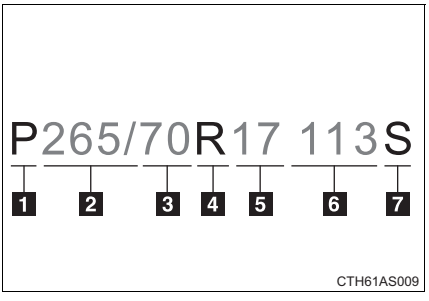

1. Tire use
   (P = Passenger car,
   T = Temporary use)
2. Section width (millimeters)
3. Aspect ratio
   (tire height to section width)
4. Tire construction code
   (R = Radial, D = Diagonal)
5. Wheel diameter (inches)
6. Load index (2 digits or 3 digits)
7. Speed symbol
   (alphabet with one letter)

Tire dimensions

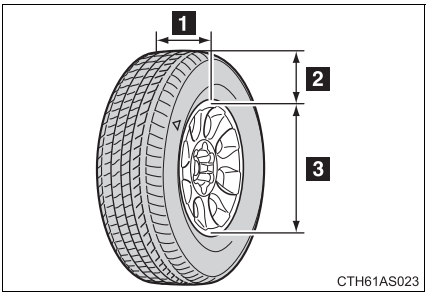

1. Section width
2. Tire height
3. Wheel diameter

Tire section names

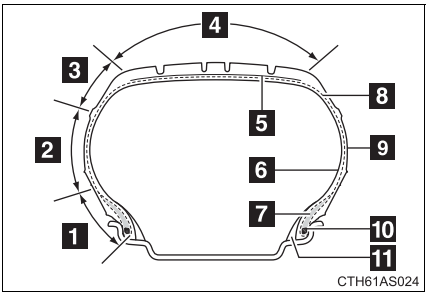

1 Bead
2 Sidewall
3 Shoulder
4 Tread
5 Belt
6 Inner liner
7 Reinforcing rubber
8 Carcass
9 Rim lines
10 Bead wires
11 Chafer

Uniform Tire Quality Grading

This information has been prepared in accordance with regulations issued by the National Highway Traffic Safety Administration of the U.S. Department of Transportation.
It provides the purchasers and/or prospective purchasers of Toyota vehicles with information on uniform tire quality grading.

Your Toyota dealer will help answer any questions you may have as you read this information.

DOT quality grades

All passenger vehicle tires must conform to Federal Safety Requirements in addition to these grades. Quality grades can be found where applicable on the tire sidewall between tread shoulder and maximum section width.

For example: Treadwear 200 Traction AA Temperature A

Treadwear

The treadwear grade is a comparative rating based on the wear rate of the tire when tested under controlled conditions on a specified government test course.

For example, a tire graded 150 would wear one and a half (1 - 1/2) times as well on the government course as a tire graded 100.
The relative performance of tires depends upon the actual conditions of their use. Performance may differ significantly from the norm due to variations in driving habits, service practices and differences in road characteristics and climate.

Traction AA, A, B, C

The traction grades, from highest to lowest, are AA, A, B and C, and they represent the tire's ability to stop on wet pavement as measured under controlled conditions on specified government test surfaces of asphalt and concrete.

A tire marked C may have poor traction performance.

Warning: The traction grade assigned to this tire is based on braking (straight ahead) traction tests and does not include cornering (turning) traction.

Temperature A, B, C

The temperature grades are A (the highest), B, and C, representing the tire's resistance to the generation of heat and its ability to dissipate heat when tested under controlled conditions on a specified indoor laboratory test wheel.

Sustained high temperature can cause the material of the tire to degenerate and reduce tire life, and excessive temperature can lead to sudden tire failure.

Grade C corresponds to a level of performance which all passenger car tires must meet under the Federal Motor Vehicle Safety Standard No. 109.

Grades B and A represent higher levels of performance on the laboratory test wheel than the minimum required by law.

Warning: The temperature grades of a tire assume that it is properly inflated and not overloaded.
Excessive speed, underinflation, or excessive loading, either separately or in combination, can cause heat buildup and possible tire failure.

Glossary of tire terminology

Tire related term	Meaning
Cold tire inflation pressure	Tire pressure when the vehicle has been parked for three hours or more, or has not been driven more than 1 mile or 1.5 km under that condition
Maximum inflation pressure	The maximum cold inflated pressure to which a tire may be inflated, shown on the sidewall of the tire
Recommended inflation pressure	Cold tire inflation pressure recommended by a manufacturer.
Accessory weight	The combined weight (in excess of those standard items which may be replaced) of automatic transmission, power steering, power brakes, power windows, power seats, radio and heater, to the extent that these items are available as factory-installed equipment (whether installed or not)
Curb weight	The weight of a motor vehicle with standard equipment, including the maximum capacity of fuel, oil and coolant, and if so equipped, air conditioning and additional weight optional engine
Maximum loaded vehicle weight	The sum of: (a) Curb weight (b) Accessory weight (c) Vehicle capacity weight (d) Production options weight

Tire related term	Meaning
Normal occupant weight	150 lb. (68 kg) times the number of occupants specified in the second column of Table 1* that follows
Occupant distribution	Distribution of occupants in a vehicle as specified in the third column of Table 1* below
Production options weight	The combined weight of installed regular production options weighing over 5 lb. (2.3 kg) in excess of the standard items which they replace, not previously considered in curb weight or accessory weight, including heavy duty brakes, ride levelers, roof rack, heavy duty battery, and special trim
Rim	A metal support for a tire or a tire and tube assembly upon which the tire beads are seated
Rim diameter (Wheel diameter)	Nominal diameter of the bead seat
Rim size designation	Rim diameter and width
Rim type designation	The industry manufacturer's designation for a rim by style or code
Rim width	Nominal distance between rim flanges
Vehicle capacity weight (Total load capacity)	The rated cargo and luggage load plus 150 lb. (68 kg) times the vehicle's designated seating capacity
Vehicle maximum load on the tire	The load on an individual tire that is determined by distributing to each axle its share of the maximum loaded vehicle weight, and dividing by two

Tire related term	Meaning
Vehicle normal load on the tire	The load on an individual tire that is determined by distributing to each axle its share of curb weight, accessory weight, and normal occupant weight (distributed in accordance with Table 1* below), and dividing by two
Weather side	The surface area of the rim not covered by the inflated tire
Bead	The part of the tire that is made of steel wires, wrapped or reinforced by ply cords and that is shaped to fit the rim
Bead separation	A breakdown of the bond between components in the bead
Bias ply tire	A pneumatic tire in which the ply cords that extend to the beads are laid at alternate angles substantially less than 90 degrees to the centerline of the tread
Carcass	The tire structure, except tread and sidewall rubber which, when inflated, bears the load
Chunking	The breaking away of pieces of the tread or sidewall
Cord	The strands forming the plies in the tire
Cord separation	The parting of cords from adjacent rubber compounds
Cracking	Any parting within the tread, sidewall, or innerliner of the tire extending to cord material
CT	A pneumatic tire with an inverted flange tire and rim system in which the rim is designed with rim flanges pointed radially inward and the tire is designed to fit on the underside of the rim in a manner that encloses the rim flanges inside the air cavity of the tire

Tire related term	Meaning
Extra load tire	A tire designed to operate at higher loads and at higher inflation pressures than the corresponding standard tire
Groove	The space between two adjacent tread ribs
Innerliner	The layer(s) forming the inside surface of a tubeless tire that contains the inflating medium within the tire
Innerliner separation	The parting of the innerliner from cord material in the carcass
Intended outboard sidewall	(a)The sidewall that contains a whitewall, bears white lettering, or bears manufacturer, brand, and/or model name molding that is higher or deeper than the same molding on the other sidewall of the tire, or (b)The outward facing sidewall of an asymmetrical tire that has a particular side that must always face outward when mounted on a vehicle
Light truck (LT) tire	A tire designated by its manufacturer as primarily intended for use on lightweight trucks or multipurpose passenger vehicles
Load rating	The maximum load that a tire is rated to carry for a given inflation pressure
Maximum load rating	The load rating for a tire at the maximum permissible inflation pressure for that tire
Maximum permissible inflation pressure	The maximum cold inflation pressure to which a tire may be inflated
Measuring rim	The rim on which a tire is fitted for physical dimension requirements
Open splice	Any parting at any junction of tread, sidewall, or innerliner that extends to cord material
Outer diameter	The overall diameter of an inflated new tire

Tire related term	Meaning
Overall width	The linear distance between the exteriors of the sidewalls of an inflated tire, including elevations due to labeling, decorations, or protective bands or ribs
Passenger car tire	A tire intended for use on passenger cars, multipurpose passenger vehicles, and trucks, that have a gross vehicle weight rating (GVWR) of 10,000 lb. or less.
Ply	A layer of rubber-coated parallel cords
Ply separation	A parting of rubber compound between adjacent plies
Pneumatic tire	A mechanical device made of rubber, chemicals, fabric and steel or other materials, that, when mounted on an automotive wheel, provides the traction and contains the gas or fluid that sustains the load
Radial ply tire	A pneumatic tire in which the ply cords that extend to the beads are laid at substantially 90 degrees to the centerline of the tread
Reinforced tire	A tire designed to operate at higher loads and at higher inflation pressures than the corresponding standard tire
Section width	The linear distance between the exteriors of the sidewalls of an inflated tire, excluding elevations due to labeling, decoration, or protective bands
Sidewall	That portion of a tire between the tread and bead
Sidewall separation	The parting of the rubber compound from the cord material in the sidewall

Tire related term	Meaning
Snow tire	A tire that attains a traction index equal to or greater than 110, compared to the ASTM E-1136 Standard Reference Test Tire, when using the snow traction test as described in ASTM F-1805-00, Standard Test Method for Single Wheel Driving Traction in a Straight Line on Snow-and Ice-Covered Surfaces, and which is marked with an Alpine Symbol ( ) on at least one sidewall
Test rim	The rim on which a tire is fitted for testing, and may be any rim listed as appropriate for use with that tire
Tread	That portion of a tire that comes into contact with the road
Tread rib	A tread section running circumferentially around a tire
Tread separation	Pulling away of the tread from the tire carcass
Treadwear indicators (TWI)	The projections within the principal grooves designed to give a visual indication of the degrees of wear of the tread
Wheel-holding fixture	The fixture used to hold the wheel and tire assembly securely during testing

*: Table 1 — Occupant loading and distribution for vehicle normal load for various designated seating capacities

Designated seating capacity, Number of occupants	Vehicle normal load, Number of occupants	Occupant distribution in a normally loaded vehicle
2 through 4	2	2 in front
5 through 10	3	2 in front, 1 in second seat
11 through 15	5	2 in front, 1 in second seat, 1 in third seat, 1 in fourth seat
16 through 20	7	2 in front, 2 in second seat, 2 in third seat, 1 in fourth seat

Customizable features

Your vehicle includes a variety of electronic features that can be personalized to suit your preferences. Programming these preferences requires specialized equipment and may be performed by your Toyota dealer.

Some function settings are changed simultaneously with other functions being customized. Contact your Toyota dealer for further details.

Item	Function	Default setting	Customized setting
Smart key system and wireless remote control (→P. 33, 47)	Operation signal (Emergency flashers)	On	Off
	Operation signal (Buzzer)	On	Off
	Open door warning function (when locking the vehicle)	On	Off
	Automatic door locking function (if a door is not opened after being unlocked)	On	Off
	Time elapsed before automatic door lock function is activated if door is not opened after being unlocked	60 seconds	30 seconds
			120 seconds
Smart key system (→P. 33)	Smart key system	On	Off
Wireless remote control (→P. 47)	Wireless remote control	On	Off
	Panic function	On	Off
	Operation signal (Buzzer volume)	Level 7	OFF to level 6

Item	Function	Default setting	Customized setting
Door lock (→P. 51, 597)	Speed-detecting automatic door lock function	Off	On
	Shifting the shift lever to position other than P locks all doors	On	Off
	Shifting the shift lever to P unlocks all doors	On	Off
	Opening driver's door unlocks all doors	Off	On
Power windows (→P. 91)	Mechanical key linked operation (close)	Off	On
	Mechanical key linked operation (open)	Off	On
	Wireless remote control linked operation (open)	Off	On
	Wireless remote control linked operation signal (Buzzer)	On	Off
Automatic light control system (→P. 198)	Light sensor sensitivity	Level 3	Levels 1 to 5
	Time elapsed before headlights automatically turn off after doors are closed	30 seconds	Off
			60 seconds
			90 seconds
	Ambient light level at which instrument illumination begins to dim (meter lights etc.)	Standard	-2 (darker) to 2 (brighter)
	Ambient light level at which instrument illumination begins to brighten (meter lights etc.)	Standard	-2 (darker) to 2 (brighter)

Item	Function	Default setting	Customized setting
Illumination (→P. 413)	Time period before lights turn off	15 seconds	7.5 seconds
			30 seconds
	Vehicles without a smart key system: Operation after the engine switch is turned to the “LOCK” position Vehicles with a smart key system: Operation after the “ENGINE START STOP” switch is turned OFF	On	Off
	Operation when the doors are unlocked	On	Off
	Vehicles with a smart key system: Operation when you approach the vehicle with the electronic key on your person (When the interior light switch [ON/DOOR/OFF] is DOOR)	On	Off
	Footwell lights	On	Off
	Overhead courtesy light	On	Off
	Interior light control	On	Off
	Interior light dimmer control while driving	On	Off

Item	Function	Default setting	Customized setting
Outer foot lights (if equipped) (→P. 413)	Vehicles with a smart key system: Operation when you approach the vehicle with the electronic key on your person	On	Off
	Operation when the doors are unlocked using the wireless remote control, key or entry function	On	Off
	Operation when the doors are unlocked using the door lock switch	On	Off
	Time period before lights turn off	15 seconds	7.5 seconds
			30 seconds
	Lighting control	On	Off
Moon roof (→P. 98)	Mechanical key linked operation	Off	On
	Mechanical key linked operation	Open and close	Open only
			Close only
	Linked operation of components when door key is used	Slide only	Tilt only
	Wireless remote control linked operation (open only)	Off	On
	Linked operation of components when wireless remote control is used (open only)	Slide only	Tilt only

Item	Function	Default setting	Customized setting
Rear window wiper and washer (→P. 207)	Wiper operates automatically when washer is operated	On	Off
	Drip prevention function	On	Off
	Wiper operation interval	3 seconds	2 seconds
			4 seconds
			5 seconds
	Time elapsed before the rear wiper storage function activates	3 seconds	4 seconds
			5 seconds
			6 seconds
Power back window (→P. 94)	Vehicles without a smart key system: Close operation linked to door lock operation using a key	On	Off
	Vehicles without a smart key system: Open operation linked to door unlock operation using a key	On	Off
	Vehicles with a smart key system: Close operation linked to door lock operation using the switch	On	Off
	Vehicles with a smart key system: Open operation linked to door unlock operation using the switch	On	Off

Item	Function	Default setting	Customized setting
Power back window (→P. 94)	Vehicles with a smart key system: Time required to press and hold the switch before the window begins to open/close	0.8 seconds	1 second
			1.2 seconds
			1.4 seconds
Intuitive parking assist (→P. 213)	Buzzer volume	Max.	Min. to Max.
Seat belt reminder (→P. 568)	Vehicle speed linked seat belt reminder buzzer	On	Off

Items to initialize

The following item must be initialized for normal system operation in cases such as after the battery is reconnected, or maintenance is performed on the vehicle.

Item	When to initialize	Reference
Engine oil maintenance data	After changing engine oil	P. 501

For owners

7

Reporting safety defects for U.S. owners 648
Seat belt instructions for Canadian owners (in French) 649
SRS airbag instructions for Canadian owners (in French) 651

Reporting safety defects for U.S. owners

If you believe that your vehicle has a defect which could cause a crash or could cause injury or death, you should immediately inform the National Highway Traffic Safety Administration (NHTSA) in addition to notifying Toyota Motor Sales, U.S.A., Inc. (Toll-free: 1-800-331-4331).

If NHTSA receives similar complaints, it may open an investigation, and if it finds that a safety defect exists in a group of vehicles, it may order a recall and remedy campaign. However, NHTSA cannot become involved in individual problems between you, your dealer, or Toyota Motor Sales, U.S.A., Inc.

To contact NHTSA, you may call the Vehicle Safety Hotline toll-free at 1-888-327-4236 (TTY: 1-800-424-9153); go to *http://www.safercar.gov*; or write to: Administrator, NHTSA, 1200 New Jersey Ave, S.E., Washington, DC 20590. You can also obtain other information about motor vehicle safety from *http://www.safercar.gov*.

The following is a French explanation of seat belt instructions extracted from the seat belt section in this manual.

See the seat belt section for more detailed seat belt instructions in English.

Utilisation correcte des ceintures de sécurité

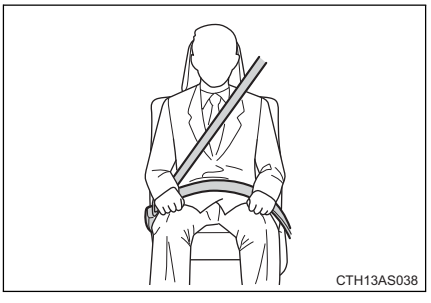

- Déroulez la sangle diagonale de telle sorte qu'elle passe bien sur l'épaule, sans pour autant être en contact avec votre cou ou glisser de votre épaule.
- Placez la sangle abdominale le plus bas possible sur les hanches.
- Réglez la position du dossier de siège. Asseyez-vous le dos le plus droit possible et calez-vous bien dans le siège.
- Ne vrillez pas la ceinture de sécurité.

Entretien et soin

Ceintures de sécurité

Nettoyez avec un chiffon ou une éponge humectée d'eau savonneuse tiède. Profitez de l'occasion pour vérifier régulièrement que les ceintures ne sont pas effilochées, entaillées, ou ne paraissent pas exagérément usées.

ATTENTION

Détérioration et usure des ceintures de sécurité

Inspectez les ceintures de sécurité périodiquement. Contrôlez qu'elles ne sont pas entaillées, effilochées, et que leurs ancrages ne sont pas desserrés. N'utilisez pas une ceinture de sécurité défectueuse avant qu'elle ne soit remplacée. Une ceinture de sécurité défectueuse n'apporte aucune garantie de protection de l'occupant en cas d'accident.

The following is a French explanation of SRS airbag instructions extracted from the SRS airbag section in this manual.
See the SRS airbag section for more detailed SRS airbag instructions in English.

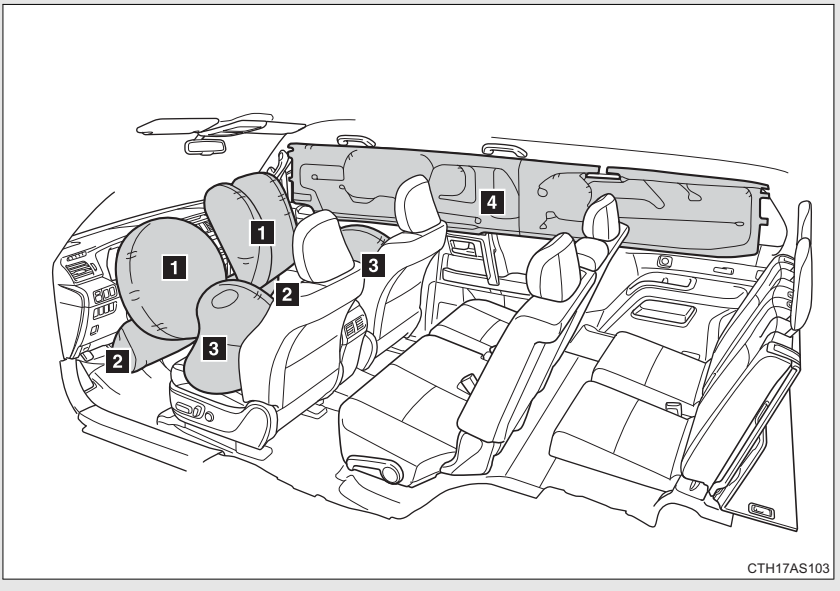

Sacs de sécurité gonflables SRS frontaux

1 Sac de sécurité gonflable conducteur/sac de sécurité gonflable passager avant SRS
Participent à la protection de la tête et du thorax du conducteur et du passager avant contre les chocs avec les éléments de l'habitacle

2 Sacs de sécurité gonflables SRS de genoux
Participent à la protection du conducteur et du passager avant

Sacs de sécurité gonflables SRS latéraux et rideau

3 Sacs de sécurité gonflables SRS latéraux
Participent à la protection du haut du corps des occupants des sièges avant

4 Sacs de sécurité gonflables SRS rideau
Participent principalement à la protection de la tête des occupants assis aux places extérieures

Composition du système de sacs de sécurité gonflables SRS

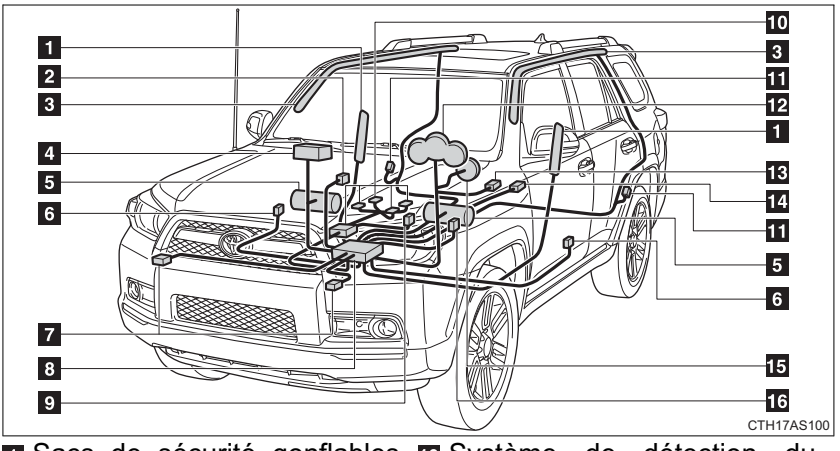

1 Sacs de sécurité gonflables latéraux

2 Témoins indicateurs “AIR BAG ON” et “AIR BAG OFF”

3 Sacs de sécurité gonflables rideau

4 Sac de sécurité gonflable passager avant

5 Sacs de sécurité gonflables de genoux

6 Capteurs de sacs de sécurité gonflables latéraux et rideau

7 Capteurs de sacs de sécurité gonflables frontaux

8 Boîtier électronique de sacs de sécurité gonflables

9 Contacteur de boucle de ceinture de sécurité passager avant

10 Système de détection du passager (calculateur électronique et capteurs)

11 Capteurs de sacs de sécurité gonflables rideau

12 Témoin d'alerte SRS et témoin indicateur “RSCA OFF”

13 Bouton de neutralisation de capteur de retournement des sacs de sécurité gonflables rideau

14 Capteur au plancher

15 Sac de sécurité gonflable conducteur

16 Contacteur de boucle de ceinture de sécurité conducteur

Votre véhicule est équipé de SACS DE SECURITE GONFLABLES INTELLIGENTS (ADVANCED AIRBAGS) conçus selon les normes de sécurité américaines applicables aux véhicules à moteur (FMVSS208). Le système de sacs de sécurité gonflables régule la puissance de déploiement des sacs de sécurité gonflables conducteur et passager avant. Le système de sac de sécurité gonflable conducteur comprend le contacteur de boucle de ceinture de sécurité conducteur, etc. Le système de sac de sécurité gonflable passager avant comprend le capteur de classification des occupants du siège passager avant, etc.

Les principaux éléments du système de sacs de sécurité gonflables SRS sont illustrés ci-dessus. Le système des sacs de sécurité gonflables SRS est commandé par un boîtier électronique. Ce boîtier intègre un capteur de sécurité et un capteur de sac de sécurité gonflable.

Lorsque la violence du choc frontal ou latéral l'exige, le système de sacs de sécurité gonflables SRS déclenche les dispositifs pyrotechniques de gonflage (générateurs de gaz). Le déploiement rapide des sacs de sécurité gonflables est obtenu au moyen d'une réaction chimique dans les dispositifs pyrotechniques, qui produit un gaz inoffensif permettant d'amortir le mouvement des occupants.

ATTENTION

■ **Précautions avec les sacs de sécurité gonflables SRS**

Respectez les précautions suivantes concernant les sacs de sécurité gonflables SRS.
À défaut, des blessures graves, voire mortelles, pourraient s'ensuivre.

● Le conducteur et tous les passagers à bord du véhicule doivent porter leur ceinture de sécurité correctement.
Les sacs de sécurité gonflables SRS sont des dispositifs de protection complémentaires aux ceintures de sécurité.

● Le sac de sécurité gonflable SRS conducteur se déploie avec une violence considérable, qui peut être très dangereuse voire mortelle si le conducteur se trouve très près du sac de sécurité gonflable. L'autorité fédérale chargée de la sécurité routière aux États-Unis, la NHTSA (National Highway Traffic Safety Administration) conseille:

Sachant que la zone de danger pour le sac de sécurité gonflable conducteur se trouve dans les premiers 2 à 3 in. (50 - 75 mm) de déploiement, vous disposez d'une marge de sécurité confortable en vous plaçant à 10 in. (250 mm) de votre sac de sécurité gonflable conducteur. Cette distance est à mesurer entre le moyeu du volant de direction et le sternum. Si vous êtes actuellement assis à moins de 10 in. (250 mm), vous pouvez changer votre position de conduite de différentes façons:

- Reculez votre siège le plus possible, tout en continuant à pouvoir atteindre confortablement les pédales.
- Inclinez légèrement le dossier du siège.
  Bien que les véhicules puissent être différents les uns des autres, la plupart des conducteurs peuvent s'asseoir à une distance de 10 in. (250 mm), même avec le siège conducteur complètement avancé, simplement en inclinant un peu le dossier de siège. Si vous avez des difficultés à voir la route après avoir incliné votre siège, utilisez un coussin ferme et antidérapant pour vous rehausser ou, si votre véhicule est équipé du réglage en hauteur du siège, remontez-le.
- Si votre volant de direction est réglable, inclinez-le vers le bas. Cela a pour effet d'orienter le sac de sécurité gonflable en direction de votre poitrine plutôt que de votre tête et de votre cou.

Réglez votre siège selon ces recommandations de la NHTSA, tout en conservant le contrôle des pédales, du volant de direction et la vue des commandes du tableau de bord.

ATTENTION

■ **Précautions avec les sacs de sécurité gonflables SRS**

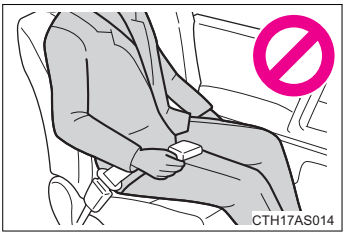

- Si vous attachez une rallonge de ceinture de sécurité à la boucle du siège conducteur, mais pas à la ceinture de sécurité proprement dite, le système de sac de sécurité gonflable SRS conducteur pense que vous avez attaché votre ceinture de sécurité, alors qu'en fait c'est faux. Dans ce cas, il se peut que le sac de sécurité gonflable SRS conducteur ne se déploie pas correctement en cas d'accident, et vous risquez d'être tué ou grièvement blessé. Veillez donc à porter la ceinture de sécurité avec la rallonge de ceinture de sécurité.

- Le sac de sécurité gonflable SRS passager avant se déploie également avec une violence considérable, qui peut être très dangereuse voire mortelle si le passager avant se trouve très près du sac de sécurité gonflable. Éloignez le siège passager avant au maximum du sac de sécurité gonflable, et réglez le dossier de siège de sorte à être assis bien droit dans le siège.
- Les nourrissons et les enfants qui ne sont pas correctement assis et/ou protégés peuvent être grièvement blessés ou tués par le déploiement d'un sac de sécurité gonflable. Installez dans un siège de sécurité enfant les enfants trop jeunes pour pouvoir utiliser la ceinture de sécurité. Toyota recommande vivement que les nourrissons et les jeunes enfants soient installés sur le siège arrière du véhicule et convenablement attachés. Les sièges arrière sont plus sûrs pour les nourrissons et les enfants que le siège passager avant.
- N'installez jamais un siège de sécurité enfant type dos à la route sur le siège passager avant, même si le témoin “AIR BAG OFF” est allumé. En cas d'accident, par la violence et la vitesse de son déploiement, le sac de sécurité gonflable passager avant peut blesser grièvement, voire tuer l'enfant si vous l'avez installé à la place du passager avant dans un siège de sécurité enfant type dos à la route.

ATTENTION

■ **Précautions avec les sacs de sécurité gonflables SRS**

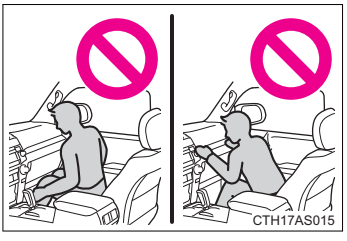

- Ne pas s'asseoir sur le bord du siège et ne pas s'appuyer contre la planche de bord.

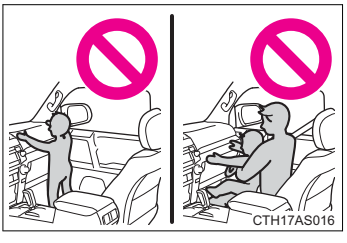

- Ne laissez pas un enfant rester debout devant le sac de sécurité gonflable SRS passager avant ou bien s'asseoir sur les genoux du passager avant.
- Ne laissez pas les occupants des sièges avant voyager avec un objet sur les genoux.

- Ne vous appuyez pas contre la porte, contre le rail latéral de toit ou contre les montants avant et arrière.

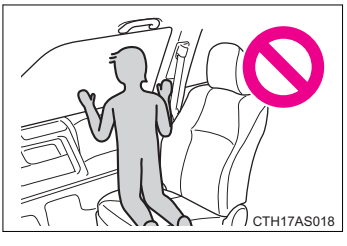

- Interdisez à quiconque de s'agenouiller sur le siège passager en appui contre la porte ou de sortir la tête ou les mains à l'extérieur du véhicule.

ATTENTION

■ **Précautions avec les sacs de sécurité gonflables SRS**

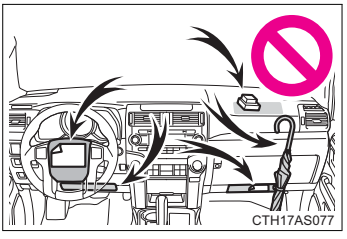

● Ne fixez ni ne posez aucun objet sur la planche de bord, la garniture centrale du moyeu de volant de direction et la partie inférieure du tableau de bord. Au déploiement des sacs de sécurité gonflables SRS conducteur, passager avant et genoux, tout objet risque de se transformer en projectile.

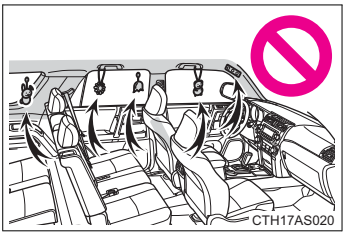

● Ne fixez aucun objet sur les portes, la vitre de pare-brise, les vitres latérales, les montants avant et arrière, le rail latéral de toit et la poignée de maintien.

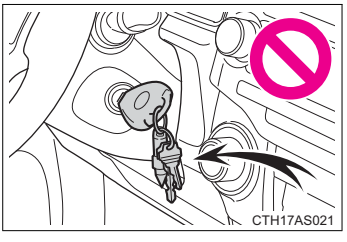

● Véhicules dépourvus de système d'accès et de démarrage “mains libres”: Évitez d'attacher au porte-clés de la clé de contact des objets lourds, pointus ou très durs, comme d'autres clés par exemple. Ces objets risquent d'entraver le déploiement du sac de sécurité gonflable SRS de genoux ou d'être projetés vers le siège conducteur par la force de déploiement, constituant ainsi un danger potentiel.

ATTENTION

■ **Précautions avec les sacs de sécurité gonflables SRS**

- Ne suspendez aux crochets à vêtements aucun cintre nu ni aucun objet dur. En cas de déploiement des sacs de sécurité gonflables rideau SRS, tous ces objets pourraient se transformer en projectiles et causer des blessures graves, voire mortelles.
- Si une housse en vinyle recouvre la partie où le sac de sécurité gonflable SRS de genoux se déploie, veillez à l'enlever.
- N'utilisez aucun accessoire de siège venant recouvrir les zones de déploiement des sacs de sécurité gonflables SRS latéraux, car il risquerait d'en gêner le déploiement. De tels accessoires peuvent empêcher les sacs de sécurité gonflables latéraux de fonctionner correctement, désactiver le dispositif ou entraîner le déploiement accidentel des sacs de sécurité latéraux, entraînant la mort ou des blessures graves.
- Évitez de faire subir des chocs ou des pressions excessives aux zones renfermant les composants des sacs de sécurité gonflables SRS.
  En effet, cela pourrait entraîner un fonctionnement anormal des sacs de sécurité gonflables SRS.
- Ne touchez aucun composant du système immédiatement après le déclenchement (déploiement) des sacs de sécurité gonflables SRS, car ils sont alors encore très chauds.
- Si vous avez des difficultés à respirer après le déploiement des sacs de sécurité gonflables SRS, ouvrez une porte ou une vitre pour faire entrer de l'air frais, ou bien descendez du véhicule si cela ne présente pas de danger. Essuyez tout résidu dès que possible afin d'éviter d'éventuelles irritations de la peau.
- Si les parties renfermant les sacs de sécurité gonflables SRS, telles que la garniture du moyeu de volant et les garnitures de montants avant et arrière, apparaissent abîmées ou craquelées, faites-les remplacer par votre concessionnaire Toyota.

ATTENTION

Modification et mise au rebut des éléments du système de sacs de sécurité gonflables SRS

Consultez impérativement votre concessionnaire Toyota si vous avez besoin d'intervenir sur votre véhicule ou de procéder à l'une des modifications suivantes. Les sacs de sécurité gonflables SRS risquent de ne pas fonctionner correctement ou de se déployer (gonfler) accidentellement, provoquant ainsi des blessures graves, voire mortelles.

- Installation, dépose, démontage et réparations des sacs de sécurité gonflables SRS
- Réparation, modification, dépose ou remplacement du volant de direction, du tableau de bord, de la planche de bord, des sièges ou de leur sellerie, des montants avant et arrière, des rails latéraux de toit ou de la garniture de toit
- Réparation ou modification de l'aile avant, du bouclier avant ou du flanc de l'habitacle
- Installation de chasse-neige, de treuils, etc. sur la calandre (pare-buffle, pare-kangourou, etc.).
- Modification des suspensions du véhicule
- Installation d'appareils électroniques, tels qu'un radioémetteur/récepteur ou d'un lecteur CD
- Aménagements du véhicule visant à permettre sa conduite par une personne atteinte d'un handicap physique

Désactivation des sacs de sécurité gonflables rideau en cas de retournement du véhicule

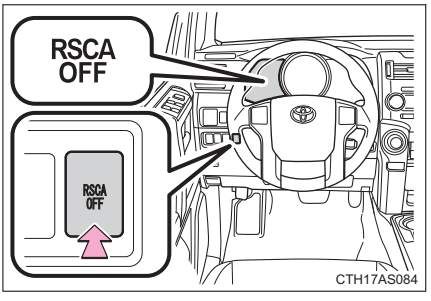

Activation/désactivation (maintenez pendant quelques secondes)

Véhicules dépourvus de système d'accès et de démarrage “mains libres”: Le témoin “RSCA OFF” s'allume. (Uniquement lorsque le contacteur de démarrage antivol est sur la position “ON”).

La fonction de détection de retournement des sacs de sécurité gonflables rideau et des prétensionneurs de ceintures de sécurité est automatiquement réactivée dès lors que vous mettez la clé de contact sur la position “ON”.

Véhicules équipés d'un système d'accès et de démarrage “mains libres”: Le témoin “RSCA OFF” s'allume. (Uniquement lorsque le bouton de démarrage/d'arrêt moteur “ENGINE START STOP” est en mode DÉMARRAGE).

La fonction de détection de retournement des sacs de sécurité gonflables rideau et des prétensionneurs de ceintures de sécurité est automatiquement réactivée dès lors que vous mettez le bouton de démarrage/d'arrêt moteur “ENGINE START STOP” en mode DÉMARRAGE.

ATTENTION

En marche normale

Assurez-vous que le témoin “RSCA OFF” n'est pas allumé. Si vous le laissez en position marche, les sacs de sécurité gonflables rideau ne se déploieront pas en cas d'accident, ce qui peut provoquer des blessures graves, voire mortelles.

Index

Abbreviation list 664

Alphabetical index..... 666

What to do if... 677

For details of equipment related to the navigation system, such as the audio system, refer to the “Navigation System Owner’s Manual”.

Abbreviation/Acronym list

ABBREVIATIONS	MEANING
2WD	2 Wheel Drive
4WD	4 Wheel Drive
ABS	Anti-lock Brake System
ACC	Accessory
AI-SHIFT	Artificial Intelligence Shift control
ALR	Automatic Locking Retractor
A-TRAC	Active traction control system
AUTO LSD	Automatic Limited Slip Differential
AUX	Auxiliary
CRS	Child Restraint System
DAC	Downhill assist control system
ECU	Electronic Control Unit
EDR	Event Data Recorder
ELR	Emergency Locking Retractor
GAWR	Gross Axle Weight Rating
GCWR	Gross Combination Weight Rating
GVWR	Gross Vehicle Weight Rating
I/M	Emission Inspection and Maintenance
KDSS	Kinetic Dynamic Suspension System
LATCH	Lower Anchors and Tethers for Children
LED	Light Emitting Diode
LSD	Limited Slip Differential
MAX	Maximum
MIN	Minimum
MMT	Methylcy clopentadienyl Manganese Tricarbonyl
M+S	Mud and Snow
MTBE	Methyl Tertiary Butyl Ether

ABBREVIATIONS	MEANING
OBD	On Board Diagnostics
RSCA	Roll Sensing of Curtain Shield airbag
SRS	Supplemental Restraint System
TIN	Tire Identification Number
TPMS	Tire Pressure Warning System
TRAC/TRC	Traction Control
VIN	Vehicle Identification Number
VSC	Vehicle Stability Control

Alphabetical index

A

A/C.....296, 302
ABS 253
Accessory meter.....194
Active head restraints 62
Active traction control.....230
Air conditioning filter.....526
Air conditioning system
Air conditioning filter.....526
Automatic air conditioning system 302
Manual air conditioning system 296
Airbags
Airbag operating conditions...118
Airbag precautions for your child 122
Airbag warning light.....566
Curtain shield airbag operating conditions.....118
Curtain shield airbag precautions 122
Front passenger occupant classification system.....130
General airbag precautions...122
Locations of airbags.....115
Modification and disposal of airbags.....127
Proper driving posture...113, 122
Roll sensing of curtain shield airbags off switch.....128
Side airbag operating conditions.....118
Side airbag precautions 122
SRS airbags.....115
Alarm.....109
Antenna 321
Anti-lock brake system 253
Armrest.....448
Audio input.....360
Audio remote controls 361
Audio system
Antenna.....321
Audio input.....360
AUX port 360
CD player/changer.....324
iPod.....341
MP3/WMA disc 333
Optimal use.....355
Portable music player 360
Radio.....317
Steering wheel audio switch.....361
Type.....313
USB memory.....348
AUTO LSD system.....232
Automatic air conditioning system.....302
Automatic light control system.....198
Automatic transmission
Automatic transmission.....173
If the shift lever cannot be shifted from P 593
S mode.....176
AUX port 360
Auxiliary box 422

B

Back door
Back door 56
Back window 94
Smart key system..... 33
Wireless remote control..... 47
Back-up lights
Replacing light bulbs 542
Wattage 624
Back window 94
Battery
Checking 509
If the vehicle has a discharged battery 599
Preparing and checking before winter 275
Bluetooth® audio..... 364
Bluetooth® phone 380
Bottle holder 427
Brake
Fluid..... 505
Parking brake 180
Brake assist 253
Break-in tips 155
Brightness control
Instrument light control..... 187

C

Care
Exterior.....478
Interior.....481
Seat belts 482
Cargo capacity 267
Cargo hooks 456
Cargo net hooks.....457
CD player/changer 324
Center differential lock 226
Chains 277
Child-protectors 53
Child restraint system
Booster seats, definition.....136
Booster seats, installation 140
Convertible seats, definition 136
Convertible seats, installation.....140
Front passenger occupant classification system 130
Infant seats, definition 136
Infant seats, installation.....140
Installing CRS with LATCH system.....142
Installing CRS with seat belts 145
Installing CRS with top straps 148

Child safety
Airbag precautions 122
Battery precautions 511, 603
Child-protectors.....53
Child restraint system.....136
How your child should wear the seat belt 82
Installing child restraints.....140
Moon roof precautions 101
Power window lock switch.....91
Power window precautions 93
Removed key battery precautions 530
Seat belt extender precautions 84
Seat belt precautions 83
Seat heater precautions.....446
Cleaning
Exterior.....478
Interior.....481
Seat belts 482
Clock 431
Coin holder.....419
Compass.....450
Condenser 504
Console box 418
Cooling system
Engine overheating 604
Crawl Control 241
Cruise control.....209
Cup holder.....423
Curtain shield airbags 115
Customizable features.....640

D

Daytime running light system 202
Defogger
Rear window 310
Side mirrors.....310
Dimension 612
Dinghy towing.....293
Display
Trip information.....195
Do-it-yourself maintenance 491
Door courtesy lights
Door courtesy lights 413
Wattage.....624
Door lock
Back door.....33, 56
Side door.....33, 51
Wireless remote control 47
Doors
Back door.....33, 56
Door windows 91
Side door.....33, 51
Side mirrors.....89
Downhill assist control system 238
Driver's seat belt reminder light.....568

Driving
Break-in tips 155
Correct posture..... 113
Driving assist systems..... 253
Off-road precautions..... 262
Procedures..... 154
Winter driving tips..... 275

E

Electronic key
If your electronic key battery is depleted..... 528, 597
Emergency flashers
Switch..... 554
Emergency, in case of
If the electronic key does not operate properly..... 597
If the engine will not start..... 591
If the shift lever cannot be shifted from P..... 593
If the vehicle has a discharged battery 599
If the warning buzzer sounds 565
If the warning light turns on..... 565
If you cannot operate back door opener..... 596
If you have a flat tire 578
If you lose your keys..... 595
If you think something is wrong 561
If your vehicle becomes stuck..... 607
If your vehicle has to be stopped in an emergency... 608
If your vehicle needs to be towed 555
If your vehicle overheats 604

Engine
Compartment 495
Engine switch.....164, 167
Hood.....494
How to start the engine.....164, 167
Identification number.....613
If the engine will not start 591
Ignition switch.....164, 167
Overheating.....604
Engine compartment cover.....497
Engine coolant
Capacity 618
Checking 503
Preparing and checking before winter.....275
Engine coolant temperature gauge.....182
Engine immobilizer system.....106
Engine oil
Capacity 616
Checking 498
Preparing and checking before winter.....275
Engine oil maintenance data.....501
Engine switch.....164, 167
Event data recorder 563

F

Floor mat.....449
Fluid
Brake.....505
Power steering.....507
Washer.....512
Fog lights
Replacing light bulbs.....541
Switch.....204
Wattage.....624
Four-wheel drive system.....223, 226
Front passenger occupant classification system.....130
Front passenger's seat belt reminder light.....568
Front seats
Adjustment.....61
Front side marker light
Replacing light bulbs.....541
Switch.....198
Wattage.....624
Front turn signal lights
Replacing light bulbs.....541
Switch.....179
Wattage.....624
Fuel
Capacity.....615
Fuel gauge.....182
Fuel pump shut off system....562
Gas station information.....680
Information.....625
Refueling.....102
Type.....615
Fuel door.....102
Fuel filler door.....102
Fuel pump shut off system.....562
Fuses.....531

G

Garage door opener.....462
Gas station information.....680
Gauges.....182
Glove box.....417
Grocery bag hooks.....459

H

Hands-free system (for cellular phone).....380
Hazard lights
Switch.....554
Head restraints
Adjusting.....76
Headlights
Replacing light bulbs.....541
Switch.....198
Wattage.....624
Heaters
Seat heaters.....446
Side mirrors.....310
Hill-start assist control.....253
Hood.....494
Hooks
Cargo hook.....456
Cargo net hooks.....457
Grocery bag hooks.....459
Horn.....181

I

I/M test..... 490
Identification
Engine 613
Vehicle..... 613
Ignition switch..... 164, 167
Illuminated entry system..... 415
Indicator lights 189
Initialization
Items to initialize..... 646
Inside rear view mirror..... 87
Instrument panel light control..... 187
Interior lights
Interior lights..... 413
Switch..... 414
Wattage..... 624
Intuitive parking assist..... 213

J

Jack
Vehicle-equipped jack 578
Jack handle..... 578

K

KDSS.....253
Keyless entry.....47
Keys
Electronic key.....30
Engine switch.....164, 167
If the electronic key does not operate properly.....597
If you lose your keys 595
Ignition switch.....164, 167
Key number.....30
Keyless entry.....47
Keys 30
Mechanical key 30
Wireless remote control key....47

L

Language
Audio 315
Licence plate lights
Replacing light bulbs.....541
Wattage.....624
Light bulbs
Replacing 541
Wattage.....624

Lights
Door courtesy lights 413
Emergency flasher switch 554
Engine switch light 413
Fog light switch 204
Footwell lights 413
Hazard light switch 554
Headlight switch 198
Inside door handle lights 413
Interior light switch 414
Luggage compartment lights 57
Outer foot lights 413
Personal light switch 414
Replacing light bulbs 541
Shift lever light 413
Turn signal lever 179
Vanity lights 430
Wattage 624
Limited slip differential 253
Load capacity 273
Lock steering column 165, 170
Luggage compartment features 456

M

Maintenance
Do-it-yourself maintenance 491
General maintenance 486
Maintenance data 612
Maintenance requirements ...484
Manual air conditioning system 296
Meter
Accessory meter 194
Instrument panel light control 187
Meters 182
Mirrors
Inside rear view mirror 87
Side mirror heaters 310
Side mirrors 89
Vanity mirrors 430
Moon roof 98
MP3 disc 333
Multi Terrain ABS 253
Multi-terrain Select 245

N

Noise from under vehicle 24

O

Odometer 182
Off-road precautions..... 262
Oil
Engine oil..... 498
Opener
Fuel filler door..... 102
Hood..... 494
Outside rear view mirrors
Adjusting and folding..... 89
Outside temperature display 433
Overhead console..... 422
Overheating, Engine 604

P

Parking brake 180
Parking lights
Replacing light bulbs 541
Switch..... 198
Wattage..... 624
Party mode switch 359
Pen holder..... 421
Personal lights
Switch..... 414
Wattage..... 624
Power back window..... 94
Power outlets..... 436, 439
Power steering
Fluid..... 507
Power windows 91

R

Radiator 504
Radio 317
Rear differential lock system 235
Rear seats
Adjustment 65
Folding down.....67, 69, 72
Rear step bumper 57
Rear turn signal lights
Replacing light bulbs 541
Wattage.....624
Rear view monitor system 218
Rear window.....94
Rear window defogger 310
Rear window wiper 207
Replacing
Fuses 531
Key battery 528
Light bulbs.....541
Tires 578
Reporting safety defects for U.S. owners 648
Roll sensing of curtain shield airbags off switch.....128
Roof luggage carrier.....267

S

Safety Connect.....469
Seat belts
Adjusting the seat belt.....79
Automatic Locking Retractor.....81
Child restraint system installation.....140
Cleaning and maintaining the seat belts 482
Emergency Locking Retractor.....81
How to wear your seat belt.....79
How your child should wear the seat belt 82
Pregnant women, proper seat belt use.....81
Reminder light.....568
Seat belt extenders 82
Seat belt pretensioners 80
Seat heaters.....446
Seating capacity.....273
Seats
Adjustment 61, 65
Adjustment precautions.....64, 75
Child seats/child restraint system installation 140
Cleaning.....481
Head restraints.....76
Properly sitting in the seat.....113
Seat heaters.....446
Service reminder indicators 189
Shift lever
Automatic transmission.....173
Front-wheel drive 223
If the shift lever cannot be shifted from P 593
Shift lock system 593
Side airbags 115
Side marker lights
Replacing light bulbs.....541
Switch 198
Wattage.....624
Side mirrors
Adjusting and folding.....89
Slide deck.....459
Smart key system
Entry function 33
Starting the engine.....167
“SOS” button 469
Spare tire
Inflation pressure 623
Storage location.....578
Spark plug 618
Specifications 612
Speech command switch.....385
Speedometer.....182
Steering
Column lock release 165, 170
Fluid 507
Steering wheel
Adjustment.....86
Audio switches.....361
Stop lights
Replacing light bulbs.....541
Wattage.....624

Storage compartment..... 458
Storage feature..... 416
Storage precautions 270
Stuck
If your vehicle becomes stuck..... 607
Sun visors..... 429
Sunshade
Roof..... 98
Switch
Emergency flasher switch 554
Engine switch 164, 167
Fog light switch..... 204
Hazard light switch 554
Ignition switch..... 164, 167
Light switches..... 198
Power back window switch..... 94
Power door lock switch..... 52
Power window switch 91
Rear window wiper and washer switch 207
Window lock switch 91
Wiper and washer switch 205

T

Tachometer
Tachometer.....182
Tail lights
Replacing light bulbs.....541
Switch.....198
Wattage.....624
Talk switch.....385
Telephone switch.....385
Theft deterrent system
Alarm.....109
Engine immobilizer system ...106
Theft prevention labels.....112
Tire inflation pressure 520
Tire information
Glossary.....633
Size 630
Tire identification number.....629
Uniform tire quality grading ...631
Tires
Chains.....275
Checking 514
If you have a flat tire.....578
Inflation pressure.....520
Inflation pressure sensor.....514
Information 628
Replacing 578
Rotating tires.....514
Size 623
Snow tires 275
Spare tire.....578
Tissue pocket.....420
Tools 578
Total load capacity.....273
Towing
Dinghy towing.....293
Emergency towing.....555
Trailer towing.....280
TRAC (TRC) 253
Traction control.....253
Trip information 194
Trip meter 182

Turn signal lights
Replacing light bulbs.....541
Switch.....179
Wattage.....624

V

Valet key 30
Vanity lights
Vanity lights.....430
Wattage.....624
Vanity mirrors.....430
Vehicle identification number 613
Vehicle stability control.....253
VSC.....253

W

Warning buzzers
Brake system 565
Key reminder.....572
Open door 567
Open moon roof reminder.....572
Seat belt reminder.....568
Warning lights
Anti-lock brake system.....567
Automatic transmission fluid temperature.....568
Brake system 565
Charging system 566
Engine oil pressure 566
Engine oil replacement.....569
KDSS 567
Low fuel level 568
Low washer fluid 568
Malfunction indicator lamp 566
Open door 567
Power steering 567
Pretensioners.....566
Seat belt reminder.....568
Smart key system.....570
SRS airbags.....566
Tire pressure.....568
Unengaged “Park”.....567

Washer
Checking.....512
Preparing and checking before winter.....275
Switch 205, 207
Washing and waxing 478
Weight
Cargo capacity.....267
Load limits.....273
Weight.....612
Wheels 524
Window glasses 91, 94
Window lock switch.....91
Windows
Power back window 94
Power windows.....91
Rear window defogger.....310
Washer.....205, 207
Windshield wiper de-icer 312
Windshield wipers 205
Wireless remote control key
Replacing the battery.....528
Wireless remote control key....47
WMA disc.....333

What to do if...

A tire punctures	P. 578	If you have a flat tire
The engine does not start	P. 106	Engine immobilizer system
	P. 591	If the engine will not start
	P. 599	If the vehicle battery is discharged
The shift lever cannot be moved out of P	P. 593	If the shift lever cannot be shifted from P
The engine coolant temperature gauge enters the red zone	P. 604	If your vehicle overheats
Steam can be seen coming from under the hood		
The key is lost	P. 595	If you lose your keys
The battery runs out	P. 599	If the vehicle battery is discharged
The doors cannot be locked	P. 51	Side doors
	P. 56	Back door
The horn begins to sound	P. 109	Alarm
The vehicle is stuck in mud or sand	P. 607	If the vehicle becomes stuck
A warning light or indicator light comes on	P. 565	If a warning light turns on or a warning buzzer sounds

Vehicles with non-Optitron type meters

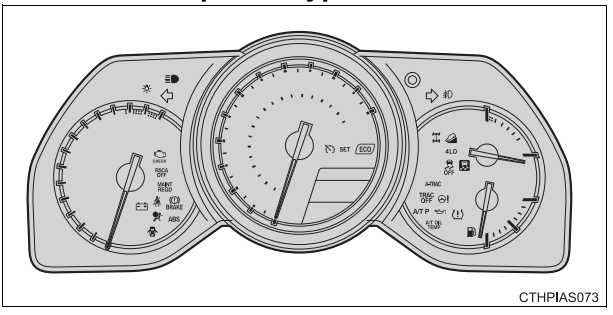

CTHPIAS073

Vehicles with Optitron type meters

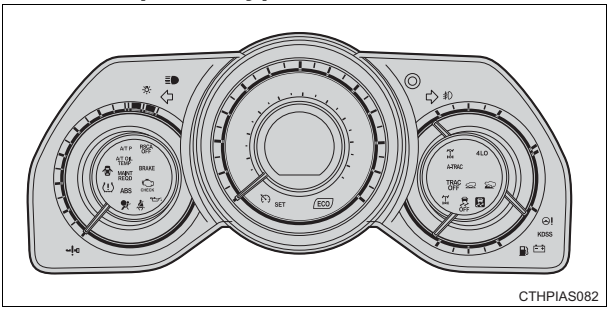

CTHPIAS082

■Warning lights

BRAKE or	Brake system warning light	
or		
BRAKE		P. 565
	Charging system warning light	P. 566
	Low engine oil pressure warning light	P. 566
CHECK	Malfunction indicator lamp	P. 566
	SRS warning light	P. 566
	Open door warning light	P. 567
ABS or	ABS warning light	
ABS		P. 567
	Slip indicator	P. 567
A/T P	Unengaged “Park” warning light	P. 567
	Power steering warning light	P. 567
	Low fuel level warning light	P. 568
	Driver’s seat belt reminder light	P. 568
PASSENGER	Front passenger’s seat belt reminder light	P. 568
MAINT REQD	Engine oil replacement reminder light	P. 569
	Low windshield washer fluid warning light	P. 568
A/T OIL TEMP	Automatic transmission fluid temperature warning light	P. 568
	Tire pressure warning light	P. 568
	Smart key system warning light	P. 570
KDSS	KDSS warning light	P. 567

GAS STATION INFORMATION

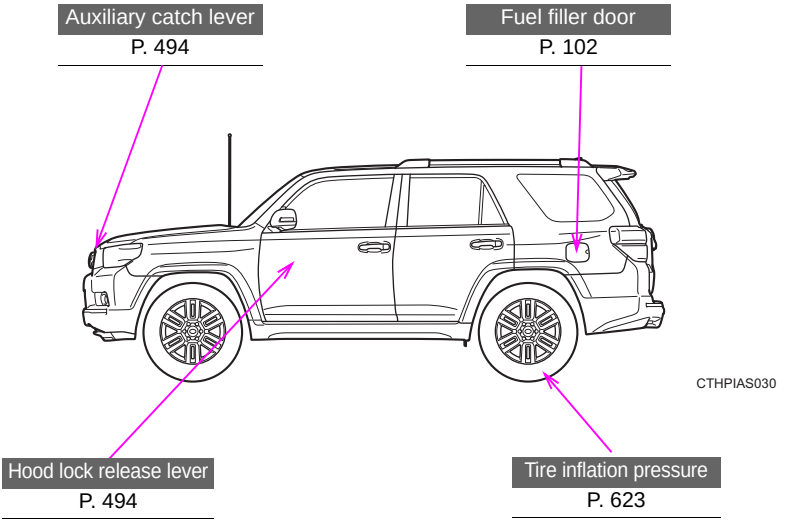

Fuel tank capacity (Reference)	23.0 gal. (87.0 L, 19.1 Imp. gal.)	
Fuel type	Unleaded gasoline only	P. 615
Cold tire inflation pressure		P. 623
Engine oil capacity (Drain and refill — reference) With filter Without filter	 **2.7 L 4-cylinder (2TR-FE) engine** 6.1 qt. (5.8 L, 5.1 Imp. qt.) **4.0 L V6 (1GR-FE) engine** 6.6 qt. (6.2 L, 5.5 Imp. qt.) **2.7 L 4-cylinder (2TR-FE) engine** 5.4 qt. (5.1 L, 4.5 Imp. qt.) **4.0 L V6 (1GR-FE) engine** 6.0 qt. (5.7 L, 5.0 Imp. qt.)	
Engine oil type	“Toyota Genuine Motor Oil” or equivalent Oil grade: ILSAC multigrade engine oil Recommended oil viscosity: SAE 0W-20	P. 616