# Owner's Manual

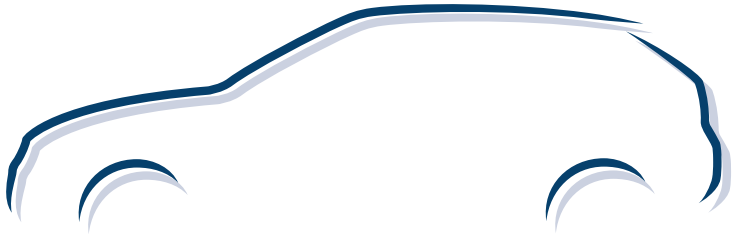

# SUBARU XV

SUBARU

# Foreword

**Congratulations on choosing a SUBARU vehicle. This Owner's Manual has all the information necessary to keep your SUBARU in excellent condition and to properly maintain the emission control system for minimizing emission pollutants. We urge you to read this manual carefully so that you may understand your vehicle and its operation. For information not found in this Owner's Manual, such as details concerning repairs or adjustments, we recommend that you contact the SUBARU dealer from whom you purchased your SUBARU or the nearest SUBARU dealer.**

**The information, specifications and illustrations found in this manual are those in effect at the time of printing. SUBARU CORPORATION reserves the right to change specifications and designs at any time without prior notice and without incurring any obligation to make the same or similar changes on vehicles previously sold. This Owner's Manual applies to all models and covers all equipment, including factory installed options. Some explanations, therefore may be for equipment not installed in your vehicle.**

**Please leave this manual in the vehicle at the time of resale. The next owner will need the information found herein.**

**NOTE: "SUBARU dealer" means an authorized SUBARU dealer and/or repairer.**

**SUBARU CORPORATION, TOKYO, JAPAN**

"SUBARU" and the six-star cluster design are registered trademarks of SUBARU CORPORATION.
© Copyright 2018 SUBARU CORPORATION

## Vehicle types

This manual describes the following vehicle types.

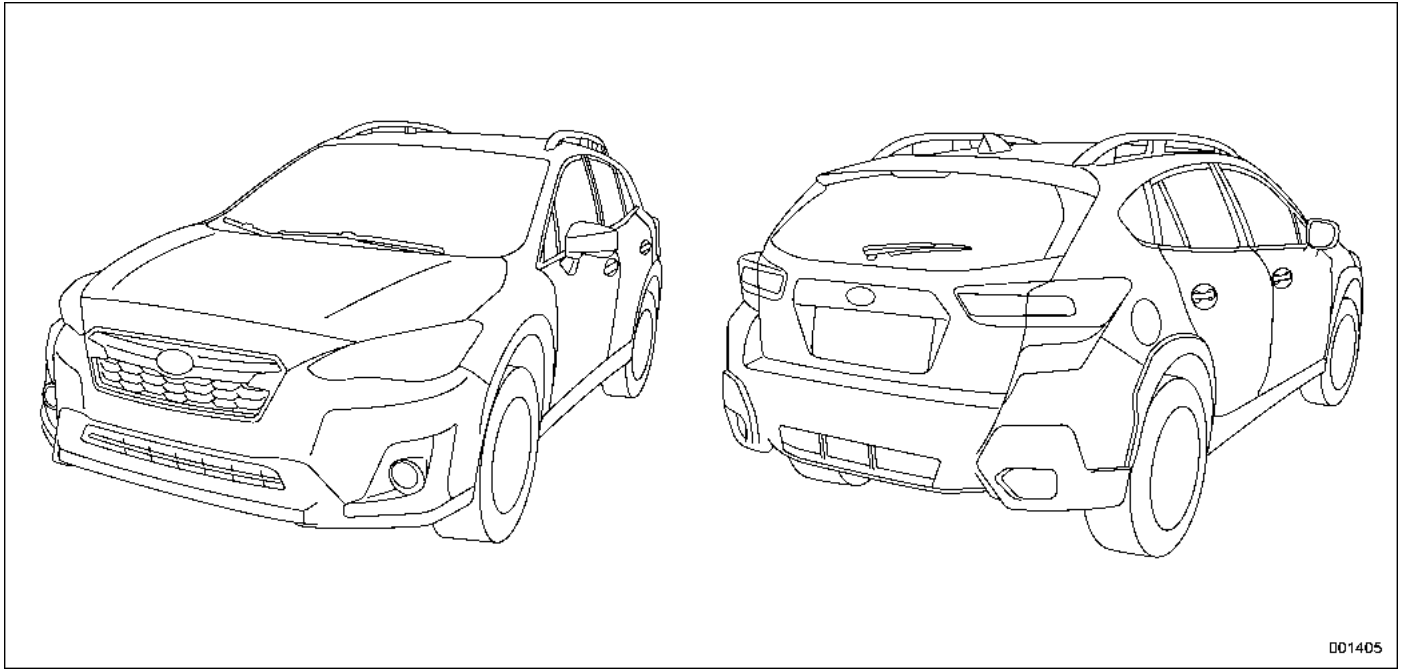

## Warranties

All warranty information, including details of coverage and exclusions, is in the “Warranty and Service Booklet”. Please read these warranties carefully.

## How to use this Owner’s Manual

### ■ Using your Owner’s Manual

Before you operate your vehicle, carefully read this manual. To protect yourself and extend the service life of your vehicle, follow the instructions in this manual. Failure to observe these instructions may result in serious injury and damage to your vehicle.

This manual is composed of fourteen chapters. Each chapter begins with a brief table of contents, so you can usually tell at a glance if that chapter contains the information you want.

**Chapter 1: Seat, seatbelt and SRS airbags**
This chapter informs you how to use the seat and seatbelt and contains precautions for the SRS airbags.

**Chapter 2: Keys and doors**
This chapter informs you how to operate the keys, locks and windows.

**Chapter 3: Instruments and controls**
This chapter informs you about the operation of instrument panel indicators and how to use the instruments and other switches.

**Chapter 4: Climate control**
This chapter informs you how to operate the climate control.

**Chapter 5: Audio**
This chapter informs you about your audio system.

**Chapter 6: Interior equipment**
This chapter informs you how to operate interior equipment.

**Chapter 7: Starting and operating**
This chapter informs you how to start and operate your SUBARU.

**Chapter 8: Driving tips**
This chapter informs you how to drive your SUBARU in various conditions and explains some safety tips on driving.

**Chapter 9: In case of emergency**
This chapter informs you what to do if you have a problem, such as a flat tire or engine overheating.

**Chapter 10: Appearance care**
This chapter informs you how to keep your SUBARU looking good.

**Chapter 11: Maintenance and service**
This chapter informs you when you need to take your SUBARU to the dealer for scheduled maintenance and informs you how to keep your SUBARU running properly.

*– CONTINUED –*

**Chapter 12: Specifications**

This chapter informs you about dimension and capacities of your SUBARU.

**Chapter 13: Supplement**

This chapter informs you of supplementary information complied with some countries' requirements.

**Chapter 14: Index**

This is an alphabetical listing of all that's in this manual. You can use it to quickly find something you want to read.

**For models with EyeSight system:**

For details about the EyeSight system, refer to the Owner's Manual supplement for the EyeSight system.

## ■ Safety warnings

You will find a number of WARNINGs, CAUTIONs and NOTEs in this manual.

These safety warnings alert you to potential hazards that could result in injury to you or others.

Please read these safety warnings as well as all other portions of this manual carefully in order to gain a better understanding of how to use your SUBARU vehicle safely.

**⚠ WARNING**

**A WARNING indicates a situation in which serious injury or death could result if the warning is ignored.**

**⚠ CAUTION**

**A CAUTION indicates a situation in which injury or damage to your vehicle, or both, could result if the caution is ignored.**

### NOTE

**A NOTE gives information or suggestions how to make better use of your vehicle.**

## ■ Safety symbol

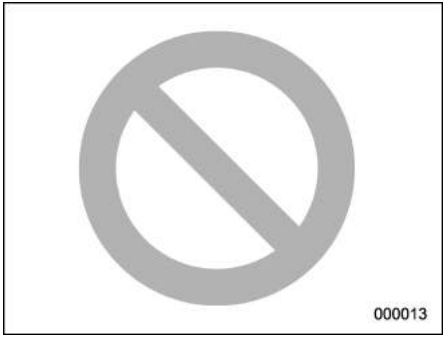


You will find a circle with a slash through it in this manual. This symbol means "Do not", "Do not do this", or "Do not let this happen", depending upon the context.

## ■ Abbreviation list

You may find several abbreviations in this manual. The meanings of the abbreviations are shown in the following list.

| Abbreviation | Meaning |
|---|---|
| ABS | Anti-lock brake system |
| A/C | Air conditioner |
| ALR/ELR | Automatic locking retractor/ Emergency locking retractor |
| ALR | Automatic locking retractor |
| AVH | Auto Vehicle Hold |
| AWD | All-wheel drive |
| CVT | Continuously variable transmission |
| CVTF | Continuously variable transmission fluid |
| EBD | Electronic brake force distribution |
| ELR | Emergency locking retractor |
| GPS | Global positioning system |
| INT | Intermittent |
| LED | Light emitting diode |
| LHD | Left-hand drive |
| MPW | Maximum permissible weight |
| OBD | On-board diagnostics |
| RAB | Reverse Automatic Braking |
| Rear MPAW | Maximum permissible rear axle weight |
| RHD | Right-hand drive |
| RON | Research octane number |
| SRH | Steering responsive headlight |
| SRS | Supplemental restraint system |
| SRVD | SUBARU rear vehicle detection |
| TPMS | Tire pressure monitoring system |

## Vehicle symbols

There are some of the symbols you may see on your vehicle.

| Mark | Name |
|---|---|
| | WARNING |
| | CAUTION |
| | Read these instructions carefully |
| | Wear eye protection |
| | Battery fluid contains sulfuric acid |
| | Keep children away |
| | Keep flames away |
| | Prevent explosions |

# Safety precautions when driving

## ■ Seatbelt and SRS airbag

**⚠ WARNING**

- **All persons in the vehicle must fasten their seatbelts BEFORE the vehicle starts to move. Otherwise, the possibility of serious injury becomes greater in the event of a sudden stop or accident.**
- **To obtain maximum protection in the event of an accident, the driver and all passengers must always wear seatbelts when in the vehicle. The SRS (Supplemental Restraint System) airbag does not do away with the need to fasten seatbelts. In combination with the seatbelts, it offers the best combined protection in case of a serious accident.**

  **Not wearing a seatbelt increases the chance of severe injury or death in a crash even when the vehicle has the SRS airbag.**

- **The SRS airbags deploy with considerable speed and force. Occupants who are out of proper position when the SRS airbag deploys could suffer very serious injuries. Because the SRS airbag needs enough space for deployment, the driver should always sit upright and well back in the seat as far from the steering wheel as practical while still maintaining full vehicle control and the front passenger should move the seat as far back as possible and sit upright and well back in the seat.**

For instructions and precautions, carefully read the following sections.

- For the seatbelt system, refer to “Seatbelts” ☞1-12.
- For the SRS airbag system, refer to “SRS airbag (Supplemental Restraint System airbag)” ☞1-49.

## ■ Child safety

**⚠ WARNING**

- **Never hold a child on your lap or in your arms while the vehicle is moving. The passenger cannot protect the child from injury in a collision, because the child will be caught between the passenger and objects inside the vehicle.**
- **While riding in the vehicle, infants and small children should always be seated in the REAR seat in an infant or a child restraint system which is appropriate for the child’s age, height and weight. If a child is too big for a child restraint system, the child should sit in the REAR seat and be restrained using the seatbelts. According to accident statistics, children are safer when properly restrained in the rear seating positions than in the front seating positions. Never allow a child to stand up or kneel on the seat.**

- **Put children in the REAR seat properly restrained at all times in a child restraint system or in a seatbelt. The SRS airbag deploys with considerable speed and force and can injure or even kill children, especially if they are not restrained or improperly restrained. Because children are lighter and weaker than adults, their risk of being injured from deployment is greater.**

**Warning label**
A) AIRBAG

**WARNING**

- **NEVER use a rearward facing child restraint on a seat protected by an ACTIVE AIRBAG in front of it, DEATH or SERIOUS INJURY to the CHILD can occur.**
- **Always turn the child safety locks to the "LOCK" position when children sit on the rear seat. Serious injury could result if a child accidentally opens the door and falls out. Refer to "Child safety locks" ☞2-24.**
- **Always lock the passengers' windows using the lock switch when children are riding in the vehicle. Failure to follow this procedure could result in injury to a child operating the power window. Refer to "Windows" ☞2-24.**
- **Never leave unattended children, adults or animals in the vehicle. They could accidentally injure themselves or others through inadvertent operation of the vehicle. Also, on hot or sunny days, the temperature in a closed vehicle could quickly become high enough to cause severe or possibly fatal injuries to them.**

*– CONTINUED –*

- **When leaving the vehicle, close all windows and lock all doors.**

For instructions and precautions, carefully read the following sections.

- For the seatbelt system, refer to “Seatbelts” ☞1-12.
- For the child restraint system, refer to “Child restraint systems” ☞1-25.
- For the SRS airbag system, refer to “SRS airbag (Supplemental Restraint System airbag)” ☞1-49.

## ■ Engine exhaust gas (carbon monoxide)

**⚠ WARNING**

- **Never inhale engine exhaust gas. Engine exhaust gas contains carbon monoxide, a colorless and odorless gas which is dangerous, or even lethal, if inhaled.**
- **Always properly maintain the engine exhaust system to prevent engine exhaust gas from entering the vehicle.**
- **Never run the engine in a closed space, such as a garage, except for the brief time needed to drive the vehicle in or out of it.**
- **Avoid remaining in a parked vehicle for a lengthy time while the engine is running. If that is unavoidable, then use the ventilation fan to force outside air into the vehicle.**
- **Always keep the front ventilator inlet grille free from snow, leaves or other obstructions to ensure that the ventilation system always works properly.**
- **If at any time you suspect that exhaust fumes are entering the vehicle, have the problem checked and corrected as soon as possible. If you must drive under these conditions, drive only with all windows fully open.**
- **Keep the rear gate closed while driving to prevent exhaust gas from entering the vehicle.**

## ■ Drinking and driving

**⚠ WARNING**

**Drinking and then driving is very dangerous. Alcohol in the bloodstream delays your reaction and impairs your perception, judgment and attentiveness. If you drive after drinking – even if you drink just a little – it will increase the risk of being involved in a serious or fatal accident, injuring or killing yourself, your passengers and others. In addition, if you are injured in the accident, alcohol may increase the severity of that injury.**

**Please don’t drink and drive.**

Drunken driving is one of the most frequent causes of accidents. Since alcohol affects all people differently, you may have consumed too much alcohol to drive safely even if the level of alcohol in your blood is below the legal limit. The safest thing you can do is never drink and drive.

## ■ Drugs and driving

**⚠ WARNING**

**There are some drugs (over the counter and prescription) that can delay your reaction time and impair your perception, judgment and attentiveness. If you drive after taking them, it may increase your, your passengers' and other persons' risk of being involved in a serious or fatal accident.**

If you are taking any drugs, check with your doctor or pharmacist or read the literature that accompanies the medication to determine if the drug you are taking can impair your driving ability. Do not drive after taking any medications that can make you drowsy or otherwise affect your ability to safely operate a motor vehicle. If you have a medical condition that requires you to take drugs, please consult with your doctor.

Never drive if you are under the influence of any illicit mind-altering drugs. For your own health and well-being, we urge you not to take illegal drugs in the first place and to seek treatment if you are addicted to those drugs.

## ■ Driving when tired or sleepy

**⚠ WARNING**

**When you are tired or sleepy, your reaction will be delayed and your perception, judgment and attentiveness will be impaired. If you drive when tired or sleepy, your, your passengers' and other persons' chances of being involved in a serious accident may increase.**

Please do not continue to drive but instead find a safe place to rest if you are tired or sleepy. On long trips, you should make periodic rest stops to refresh yourself before continuing on your journey. When possible, you should share the driving with others.

## ■ Modification of your vehicle

**⚠ CAUTION**

**Your vehicle should not be modified. Modification could affect its performance, safety or durability, and may even violate governmental regulations. In addition, damage or performance problems resulting from modification may not be covered under warranties.**

## ■ Car phone/cell phone and driving

**⚠ CAUTION**

**Do not use a car phone/cell phone while driving; it may distract your attention from driving and can lead to an accident. If you use a car phone/cell phone, pull off the road and park in a safe place before using your phone. In some countries, only hands-free phones may legally be used while driving.**

*– CONTINUED –*

## Driving vehicles equipped with navigation system

**WARNING**

**Do not allow the monitor to distract your attention from driving. Also, do not operate the controls of the navigation system while driving. The loss of attention to driving could lead to an accident. If you wish to operate the controls of the navigation system, first take the vehicle off the road and stop it in a safe location.**

## Driving with pets

Unrestrained pets can interfere with your driving and distract your attention from driving. In a collision or sudden stop, unrestrained pets or cages can be thrown around inside the vehicle and hurt you or your passengers. Besides, the pets can be hurt under these situations. It is also for their own safety that pets should be properly restrained in your vehicle. Restrain a pet with a special traveling harness which can be secured to the rear seat with a seatbelt or use a pet carrier which can be secured to the rear seat by routing a seatbelt through the carrier's handle. Never restrain pets or pet carriers in the front passenger's seat. For further information, consult your veterinarian, local animal protection society or pet shop.

## Tire pressures

Check and, if necessary, adjust the pressure of each tire (including the spare) at least once a month and before any long journey.

Check the tire pressure when the tires are cold. Use a pressure gauge to adjust the tire pressures to the values shown on the tire placard.

For detailed information, refer to "Tires and wheels" ☞11-25.

**WARNING**

**Driving at high speeds with excessively low tire pressures can cause the tires to deform severely and to rapidly become hot. A sharp increase in temperature could cause tread separation, and destruction of the tires. The resulting loss of vehicle control could lead to an accident.**

## Attaching accessories

**WARNING**

- **Do not attach any accessories, labels or stickers (other than properly placed inspection stickers) to the windshield. Such items may obstruct your view.**
- **If it is necessary to attach an accessory (such as an electronic toll collection (ETC) device or security pass) to the windshield, consult your SUBARU dealer for details on the proper location.**

# General information

## ■ Gear shift indicator (if equipped)

**⚠ CAUTION**

**The indication of the gear shift indicator is only a guideline for driving more fuel-efficiently. The indicator does not inform the driver about safe shift operation timing. The driver has the responsibility for suitable shift operation depending on the traffic conditions or driving conditions (e.g., overtaking or driving on an uphill slope).**

This indicator supports the driver to drive more fuel-efficiently. The vehicle system determines the shift operation timing depending on the driving conditions, and informs the driver by the indicator on the combination meter. For details, refer to “Gear shift indicator” ☞3-34.

### NOTE

**Usually, the gear shift indicator is guideline for driving more fuel-efficiency and it also may operate to prevent a possible engine stall at low engine speed.**

# EU Battery directive 2006/66/EC

Followings are the symbol of EU Battery Directive 2006/66/EC.

This directive applies to the collection of batteries, recycling of disposed batteries and accumulators, and batteries not disposed of in landfills because they could be hazardous to the environment.

In your vehicle, there are some batteries that do not have the 2006/66/EC EU Battery directive symbol.

Please check and obey all local laws and regulations for the disposal of batteries or accumulations.

The following devices utilize batteries that do not have the symbol:

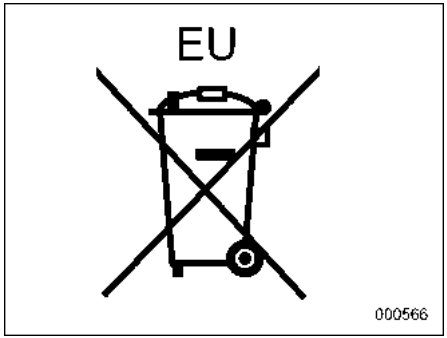


- Keys: CR1620
- Access key fobs (if equipped): CR2032

## Noise levels inside the vehicle (Customs Union Regulation)

TR CU 018/2011

(TECHNICAL REGULATION OF THE CUSTOMS UNION, On Safety of Wheeled Vehicles),

Attachment No. 3: Section 2

(Requirements for vehicles concerning their interior noise):

Table 2.1: Remarks: No. 3,

The noise level measured during acceleration may reach up to 81 dBA as maximum.

This vehicle may not be used for public purposes (as taxis, for example).

## Table of contents


| | |
|---|---|
| *Seat, seatbelt and SRS airbags* | *1* |
| *Keys and doors* | *2* |
| *Instruments and controls* | *3* |
| *Climate control* | *4* |
| *Audio* | *5* |
| *Interior equipment* | *6* |
| *Starting and operating* | *7* |
| *Driving tips* | *8* |
| *In case of emergency* | *9* |
| *Appearance care* | *10* |
| *Maintenance and service* | *11* |
| *Specifications* | *12* |
| *Supplement* | *13* |
| *Index* | *14* |

# Illustrated index

## ■ Exterior

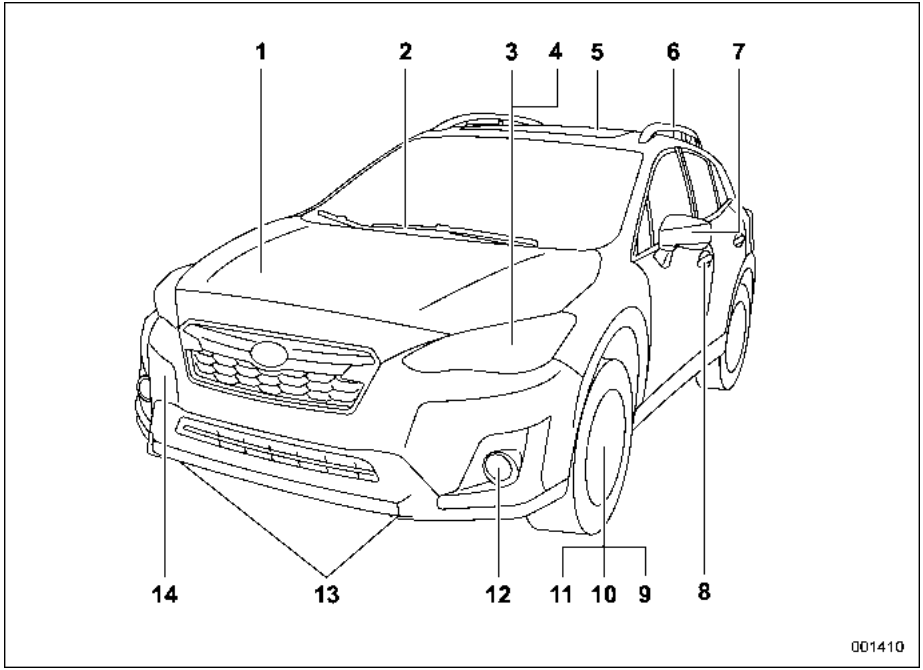


1) Engine hood (page 11-11)
2) Windshield wiper (page 3-86)
3) Headlights (page 3-70)
4) Replacing bulbs (page 11-41)
5) Sunroof (page 2-29)
6) Roof rails (page 8-14)
7) Outside mirror (page 3-91)
8) Door locks (page 2-18)
9) Tire pressure (page 11-27)
10) Flat tires (page 9-5)
11) Tire chains (page 8-12)
12) Fog lights (page 3-81)
13) Tie-down hooks (page 9-23)
14) Towing hook (page 9-23)

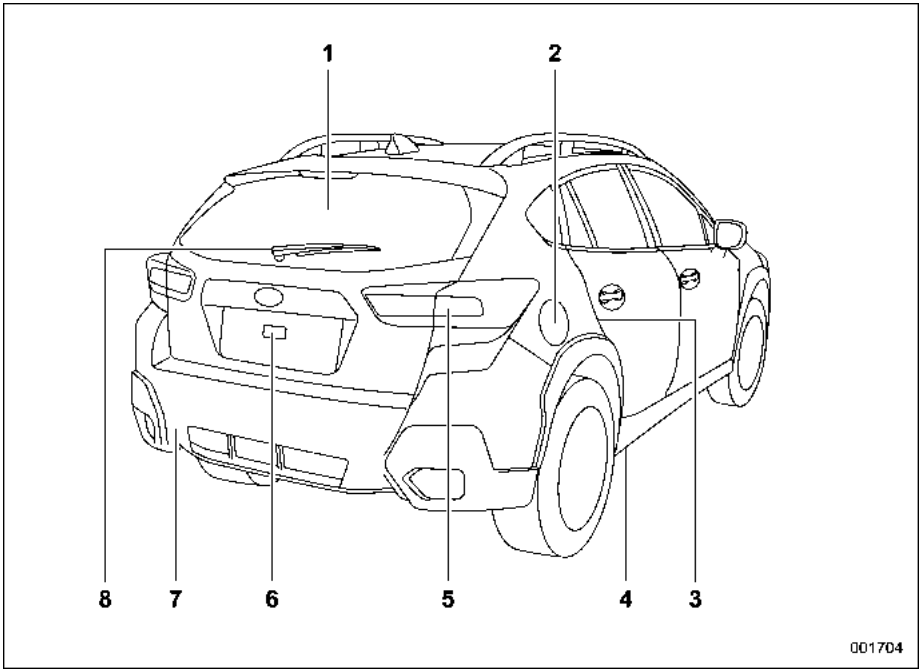


1) Rear window defogger (page 3-93)
2) Fuel filler lid and cap (page 7-4)
3) Child safety locks (page 2-24)
4) Tie-down hole (page 9-25)
5) Replacing bulbs (page 11-41)
6) Rear gate (page 2-27)
7) Towing hook (page 9-23)
8) Rear window wiper (page 3-89)

– CONTINUED –

## ■ Interior

### ▼ Passenger compartment area

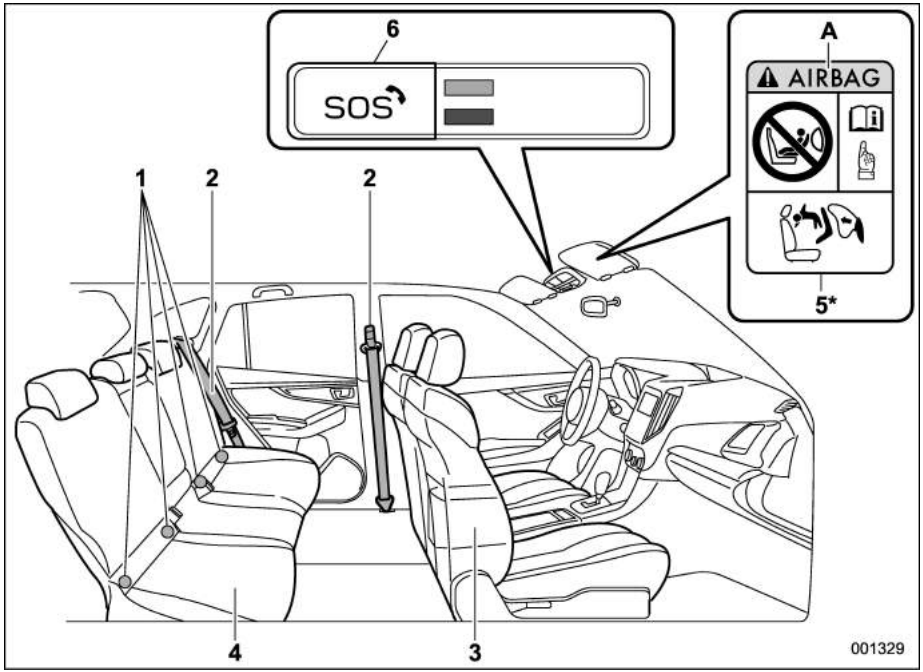


1) Anchor bars for ISOFIX child restraint system (page 1-44)
2) Seatbelt (page 1-12)
3) Front seat (page 1-5)
4) Rear seat (page 1-6)
5) Warning labels for child restraint system (page 1-29)
6) SOS button for ERA-GLONASS system

A) AIRBAG

*: NEVER use a rearward facing child restraint on a seat protected by an ACTIVE AIRBAG in front of it, DEATH or SERIOUS INJURY to the CHILD can occur.

## NOTE

**ERA-GLONASS will be available in Russia, Kazakhstan and Belarus. As of March 2016, the service is only available in Russia. Refer to the Owner's Manual supplement for the ERA-GLONASS system.**

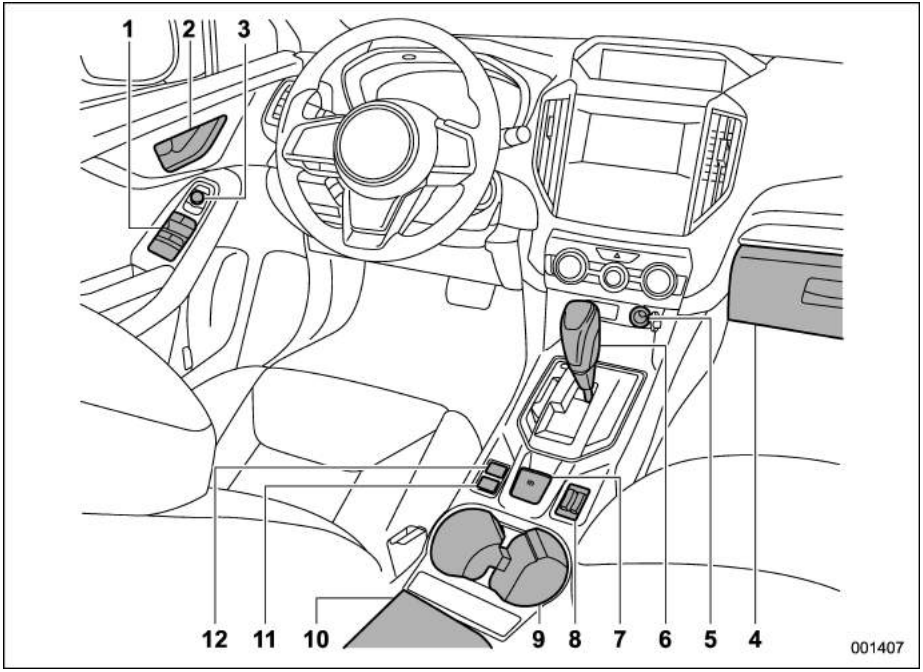


The illustration above is a typical example for left-hand drive models. For right-hand drive models, the locations of some switches/levers are different from those shown in the illustration.

1) Power windows (page 2-24)
2) Door locks (page 2-18)
3) Remote control mirror switch (page 3-91)
4) Glove box (page 6-5)
5) Front power supply socket (page 6-7)
6) Select lever (page 7-13)
7) Electronic parking brake switch (page 7-31)
8) Seat heater switches (page 1-11)
9) Cup holder (page 6-5)
10) Center console (page 6-5)
11) X-MODE switch (page 7-28)
12) Auto Vehicle Hold switch (page 7-34)

– CONTINUED –

## ■ Instrument panel

### ▼ Left-hand drive models

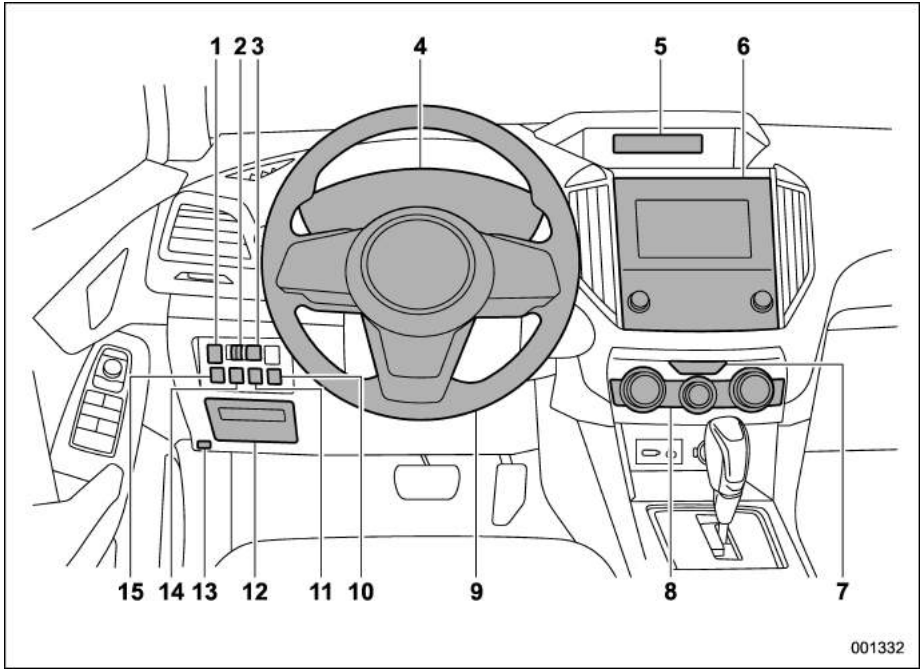


1) Steering Responsive Headlight off switch (page 3-77)
2) Illumination brightness control (page 3-12)
3) Headlight beam leveler (if equipped) (page 3-78)
4) Combination meter (page 3-9)
5) Type A multi-function display (black and white) (page 3-44)/Type B multi-function display (color LCD) (page 3-50)
6) Audio*
7) Hazard warning flasher switch (page 3-8)
8) Climate control (page 4-2)
9) Tilt/telescopic steering (page 3-95)
10) TPMS set switch (page 7-40)
11) SRVD OFF switch (page 7-60)
12) Fuse box (page 11-39)
13) Hood lock release knob (page 11-11)
14) Auto Start Stop OFF switch (page 7-47)
15) Vehicle Dynamics Control OFF switch (page 7-26)

*: For details about how to use the audio and navigation system (if equipped), refer to the separate navigation/audio Owner's Manual.

▼ **Right-hand drive models**

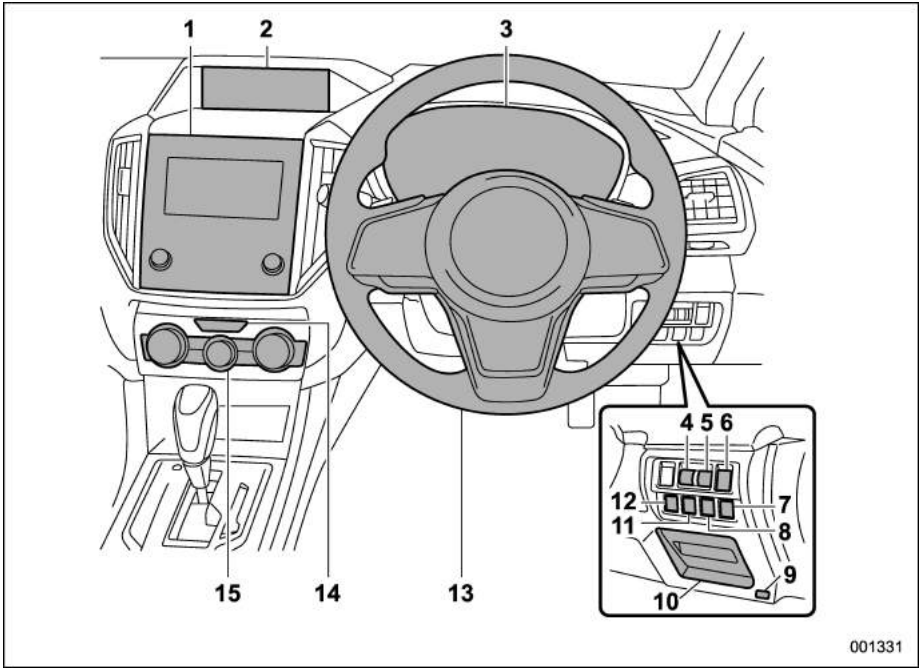


1) Audio*
2) Type A multi-function display (black and white) (page 3-44)/Type B multi-function display (color LCD) (page 3-50)
3) Combination meter (page 3-9)
4) Illumination brightness control (page 3-12)
5) Headlight beam leveler (if equipped) (page 3-78)
6) Steering Responsive Headlight OFF switch (page 3-77)
7) Vehicle Dynamics Control OFF switch (page 7-26)
8) Auto Start Stop OFF switch (page 7-47)
9) Hood lock release knob (page 11-11)
10) Fuse box (page 11-39)
11) SRVD OFF switch (models with SRVD) (page 7-60)
12) TPMS set switch (page 7-40)
13) Tilt/telescopic steering (page 3-95)
14) Hazard warning flasher switch (page 3-8)
15) Climate control (page 4-2)

*: For details about how to use the audio and navigation system (if equipped), refer to the separate navigation/audio Owner's Manual.

– CONTINUED –

## ■ Steering wheel

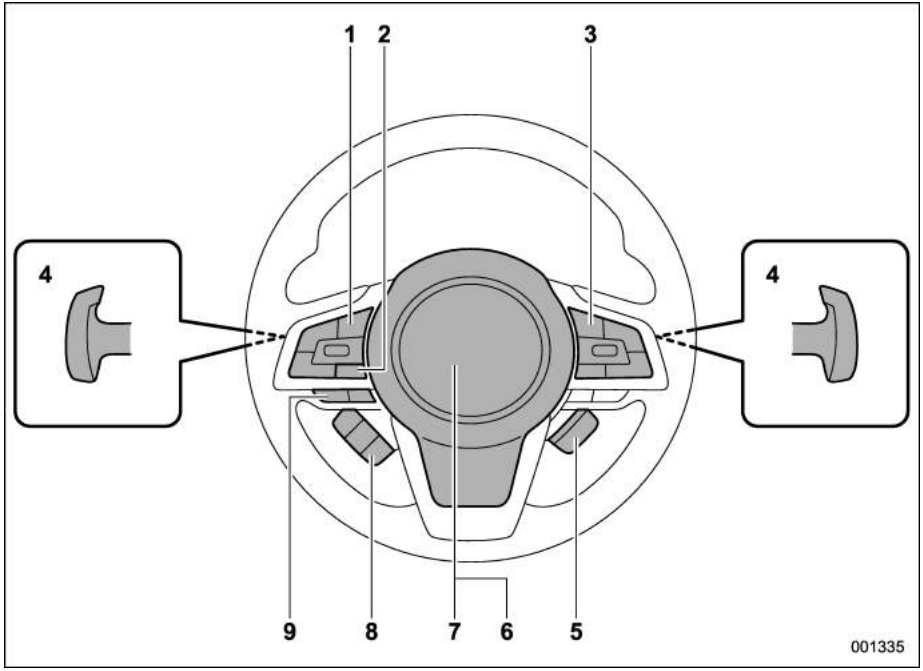


1) Audio control switches*
2) INFO button for Type A multi-function display (black and white) (page 3-44)/ INFO button for Type B multi-function display (color LCD) (page 3-52)
3) Cruise control (page 7-43)
4) Shift paddle (page 7-14)
5) Heated steering wheel switch (page 3-95)
6) SRS airbag (page 1-49)
7) Horn (page 3-96)
8) Combination meter display (color LCD) control switches (page 3-37)
9) Talk switch for voice command system*/ Hands-free phone switches*

*: For details about how to use the switches, refer to the separate navigation/audio Owner's Manual.

## ■ Light control and wiper control levers/switches

### ▼ Type A

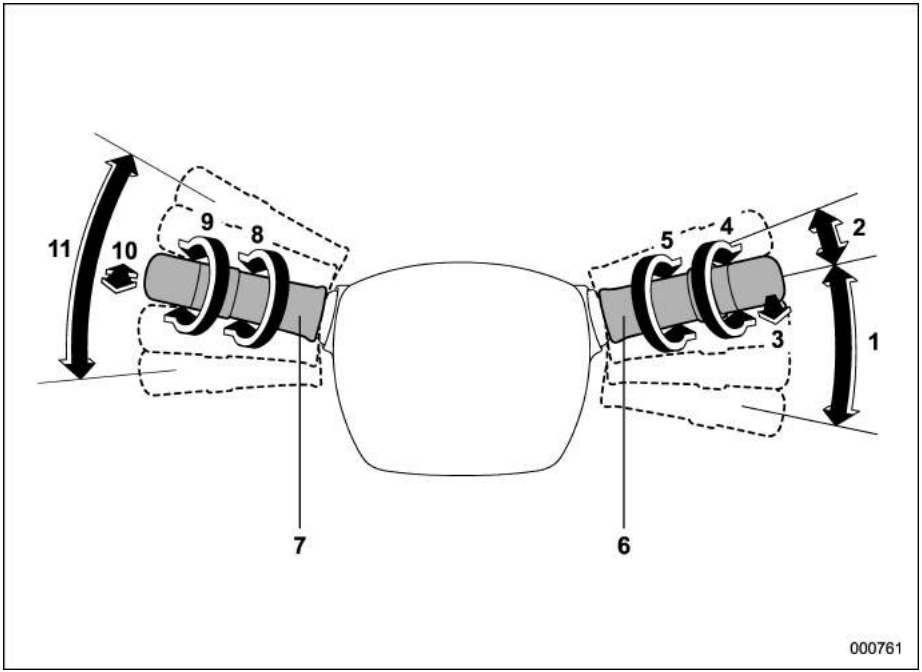


1) Windshield wiper (page 3-86)
2) Mist (page 3-86)
3) Windshield washer (page 3-88)
4) Rear window wiper and washer switch (page 3-89)
5) Wiper intermittent time control switch (page 3-88)/Sensor sensitivity control (page 3-87)
6) Wiper control lever (page 3-83)
7) Light control switch (page 3-69)
8) Fog light switch (page 3-81)
9) Headlight ON/OFF/AUTO (page 3-70)
10) Headlight flasher High/Low beam change (page 3-72)
11) Turn signal (page 3-83)

– CONTINUED –

▼ **Type B**

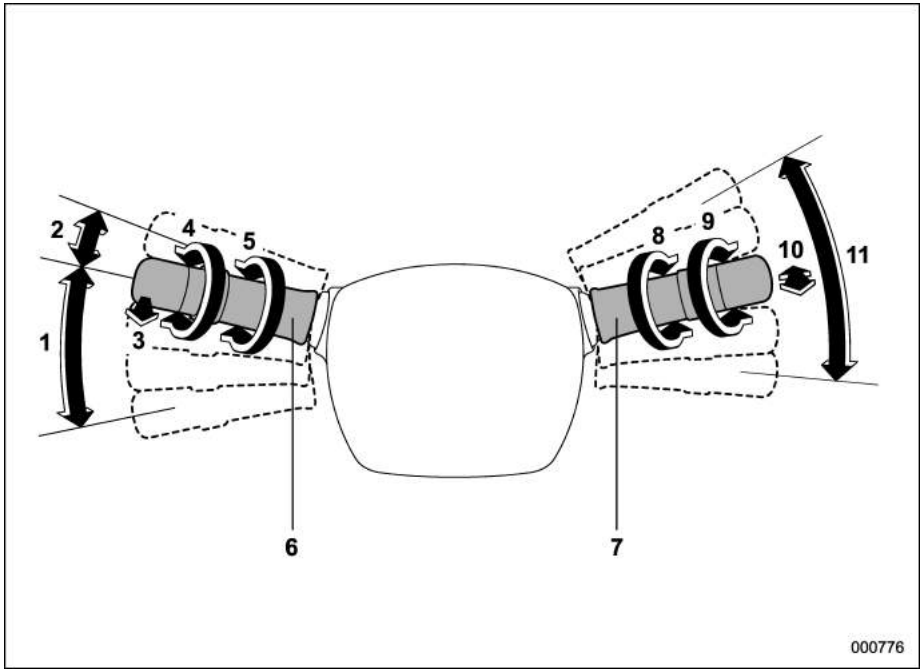


1) Windshield wiper (page 3-86)
2) Mist (page 3-86)
3) Windshield washer (page 3-88)
4) Rear window wiper and washer switch (page 3-89)
5) Wiper intermittent time control switch (page 3-88)/Sensor sensitivity control (page 3-87)
6) Wiper control lever (page 3-83)
7) Light control switch (page 3-69)
8) Fog light switch (page 3-81)
9) Headlight ON/OFF/AUTO (page 3-70)
10) Headlight flasher High/Low beam change (page 3-72)
11) Turn signal (page 3-83)

## ■ Combination meter

### ▼ Type A

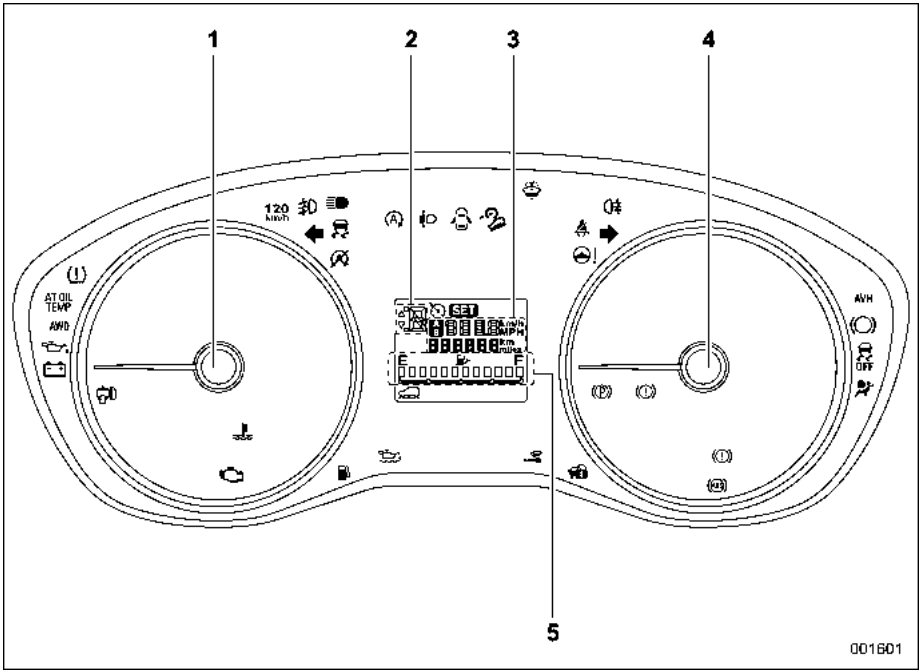


The illustration above is a typical example. For some models, the combination meter may be slightly different to that shown in the illustration.

1) Tachometer (page 3-9)
2) Select lever/gear position indicator (page 3-33)
3) Trip meter and odometer (page 3-9)
4) Speedometer (page 3-9)
5) Fuel gauge (page 3-10)

– CONTINUED –

▼ **Type B**

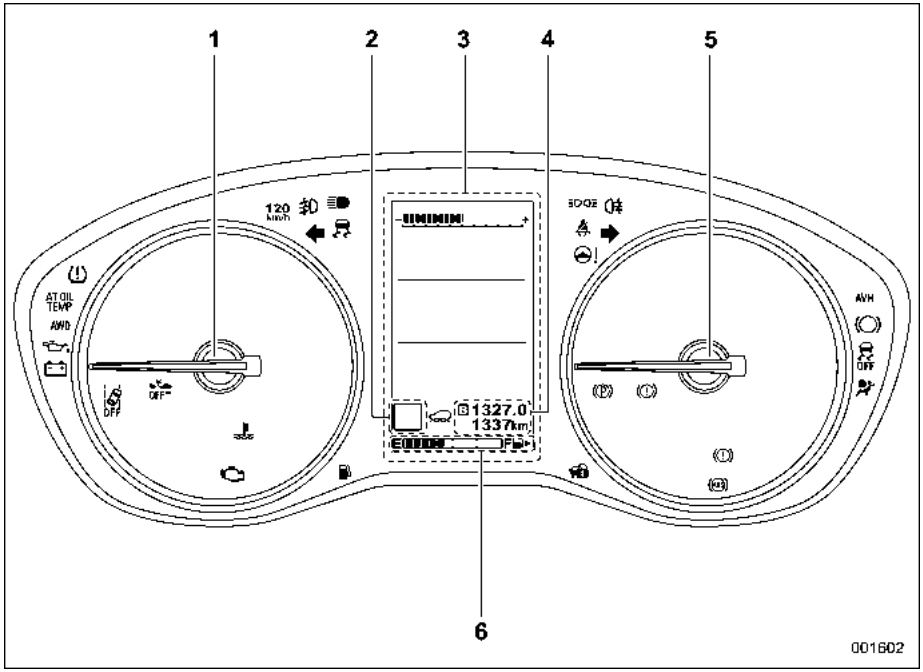


The illustration above is a typical example. For some models, the combination meter may be slightly different than that shown in the illustration.

1) Tachometer (page 3-9)
2) Select lever/gear position indicator (page 3-33)
3) Combination meter display (color LCD) (page 3-37)
4) Trip meter and odometer (page 3-9)
5) Speedometer (page 3-9)
6) Fuel gauge (page 3-10)

## ■ Warning and indicator lights

| Mark | Name | Page |
|---|---|---|
| | Seatbelt warning light | 3-14 |
| | SRS airbag system warning light | 3-16 |
| ON / | Front passenger's frontal airbag ON indicator (if equipped) | 3-16 |
| OFF / | Front passenger's frontal airbag OFF indicator (if equipped) | 3-16 |
| | Malfunction indicator light (Check Engine light) | 3-17 |
| | Coolant temperature low indicator light/ Coolant temperature high warning light | 3-18 |
| | Charge warning light | 3-19 |
| | Oil pressure warning light | 3-19 |
| | Engine low oil level warning light | 3-19 |
| AT OIL TEMP | AT OIL TEMP warning light | 3-20 |

| Mark | Name | Page |
|---|---|---|
| ABS | ABS warning light | 3-22 |
| | Brake system warning light (red) | 3-24 |
| | Electronic parking brake warning light/ Vacuum pressure system warning light (yellow) | 3-25 |
| P | Electronic parking brake indicator light | 3-25 |
| / | Door open warning light | 3-26 |
| | Engine hood open warning light (if equipped) | 3-26 |
| AWD | AWD warning light (AWD models) | 3-27 |
| | Power steering warning light | 3-27 |
| AVH | Auto Vehicle Hold ON indicator light | 3-26 |
| | Auto Vehicle Hold operation indicator light | 3-26 |
| | Depress brake indicator light (if equipped) | 3-26 |

| Mark | Name | Page |
|---|---|---|
| | Vehicle Dynamics Control warning light/ Vehicle Dynamics Control operation indicator light | 3-22 |
| OFF | Vehicle Dynamics Control OFF indicator light | 3-24 |
| | Turn signal indicator lights | 3-34 |
| | LED headlight warning light (if equipped) | 3-28 |
| | High beam indicator light | 3-34 |
| A | High beam assist indicator light (green) (if equipped) | 3-34 |
| A | High beam assist warning indicator (yellow) (if equipped) | 3-34 |
| | Automatic headlight beam leveler warning light (if equipped) | 3-27 |
| SRH OFF | Steering Responsive Headlight warning light/Steering Responsive Headlight OFF indicator light (if equipped) | 3-28 |

– CONTINUED –

| Mark | Name | Page |
|---|---|---|
| | Front fog light indicator light (if equipped) | 3-35 |
| | Rear fog light indicator light (if equipped) | 3-35 |
| | Access key warning light (if equipped) | 3-28 |
| | Immobilizer indicator light | 3-33 |
| | Headlight indicator light | 3-35 |
| | Cruise control indicator light (if equipped) | 3-34 |
| SET | Cruise control set indicator light (if equipped) | 3-35 |
| | X-MODE indicator | 3-36 |
| | Hill descent control indicator | 3-36 |
| | Low fuel warning light | 3-26 |
| 120 km/h | Vehicle speed warning light | 3-28 |

| Mark | Name | Page |
|---|---|---|
| | Low tire pressure warning light (if equipped) | 3-20 |
| | Windshield washer fluid warning light | 3-26 |
| | Auto Start Stop warning light/Auto Start Stop OFF indicator light (yellow) (if equipped) | 3-35 |
| | Auto Start Stop indicator light (green) (if equipped) | 3-36 |
| | Auto start stop No Activity Detected indicator light (if equipped) | 3-36 |
| | SUBARU Rear Vehicle Detection warning indicator (if equipped) | 3-36 |
| OFF | SUBARU Rear Vehicle Detection OFF indicator (if equipped) | 3-36 |
| RAB | RAB warning indicator (if equipped) | 3-36 |
| RAB OFF | RAB OFF indicator (if equipped) | 3-36 |
| | Icy road surface warning indicator (if equipped) | 3-37 |

# Function settings

## ■ Function settings and adjustments on the type B combination meter display (color LCD)

If your vehicle is equipped with a type B combination meter display (color LCD), setting adjustments to the following items can be manually changed within the display to meet your personal requirements.

### NOTE

**If your vehicle is not equipped with a type B combination meter display (color LCD), setting changes to the following items will need to be performed by a SUBARU dealer.**
**Refer to "Function settings and adjustments performed by a dealer" ☞28.**

| Item | | | Available settings | Factory default setting | Page reference for the vehicle system operation |
|---|---|---|---|---|---|
| 1st menu/vehicle system | 2nd menu/adjustable vehicle system setting | 3rd menu/selectable vehicle system setting | | | |
| Screen Settings | Welcome Screen | — | On/Off | On | 3-38 |
| | Good-bye Screen | — | On/Off | On | 3-38 |
| | Gauge Initial Movement | — | On/Off | On | 3-42 |
| | Units | — | km, km/h, Liter/mile, MPH, Gallon | The preset units varies depending on the models. | 3-43 |
| | Tire Pressure Units (if equipped) | — | kPa/PSi | PSi | 3-43 |
| | Languages | — | Select the display language. | The preset language varies depending on the models. | 3-43 |

– CONTINUED –

| Item | | | Available settings | Factory default setting | Page reference for the vehicle system operation |
|---|---|---|---|---|---|
| 1st menu/vehicle system | 2nd menu/adjustable vehicle system setting | 3rd menu/selectable vehicle system setting | | | |
| Warning Volume* | — | — | Max/Mid/Min | Mid | 7-58 and 7-70<br>For details about EyeSight system, refer to the Owner's Manual supplement for the EyeSight system. |
| Eyesight (models with EyeSight system) | Lead Vehicle Acquisition Sound | — | On/Off | On | Refer to the Owner's Manual supplement for the EyeSight system. |
| | Lead Vehicle Moving Monitor Function | — | On/Off | On | |
| | Cruise Control Acceleration Characteristics* | — | Lv.4 (Dynamic)/Lv.3 (Standard)/Lv.2 (Comfort)/Lv.1 (ECO) | Lv.3 (Standard) | |
| RAB (if equipped) | Sonar Audible Alarm | — | On/Off | On | 7-70 |
| Vehicle Setting | Keyless Entry System | Hazard Warning Flasher | On/Off | On | 3-43 |
| | | Security Relocking (if equipped) | 20 seconds/30 seconds/40 seconds/50 seconds/60 seconds/Off | 30 seconds | 3-43 |
| | Defogger | — | 15 minutes/Continuous | 15 minutes | 3-93 |
| | Interior Light | — | 10 seconds/20 seconds/30 seconds/Off | 30 seconds | 6-3 |
| | One-touch lane changer | — | On/Off | On | 3-83 |

| Item | | | Available settings | Factory default setting | Page reference for the vehicle system operation |
|---|---|---|---|---|---|
| 1st menu/vehicle system | 2nd menu/adjustable vehicle system setting | 3rd menu/selectable vehicle system setting | | | |
| Default Settings | — | — | No/Yes | — | 3-43 |

*: You can also set this while driving.

## ■ Function settings and adjustments on the type A combination meter display

If your vehicle is equipped with a type A combination meter display, setting adjustments to the following items can be manually changed within the display to meet your personal requirements.

| Item | Function | Available settings | Factory default setting | Page |
|---|---|---|---|---|
| Combination meter setting | Gauge needle sweep function | On/Off | On | 3-11 |
| | Changing the unit (if available) | mile/km | The preset units varies depending on the models. | 3-11 |
| | Warning volume (if available) | Lv. 1/Lv. 2/Lv. 3 | Lv. 2 | 3-11 |

– CONTINUED –

## ■ Function settings and adjustments performed by a dealer

A SUBARU dealer can change the setting adjustments of the following items to meet your personal requirements. Contact the nearest SUBARU dealer for details.

| Item | Function | Available settings | Factory default setting |
|---|---|---|---|
| Keyless Access (if equipped) | Hazard warning flasher | Operation/Non-operation | Operation |
| | Door unlock selection function (driver's door unlock) | Driver's door only/All doors and rear gate | Driver's door only (models with double locking system)/All doors and rear gate (models without double locking system) |
| | Door unlock selection function (rear gate unlock) | Rear gate only/All doors | All doors*1/Rear gate only*2 |
| | Operate the front window (except Australia models) | Operation/Non-operation | Non-operation |
| | Security relocking (if equipped) | OFF/20 seconds/30 seconds/40 seconds/50 seconds/60 seconds | 30 seconds |
| Remote keyless entry system | Hazard warning flasher | Operation/Non-operation | Operation |
| | Operate the front windows (except Australia models) | Operation/Non-operation | Non-operation |
| | Door unlock selection function (including models with keyless access function)*1 | Operation/Non-operation | Non-operation |
| | Security relocking (if equipped) | OFF/20 seconds/30 seconds/40 seconds/50 seconds/60 seconds | 30 seconds |
| Key lock-in prevention function (models without double locking system) | Key lock-in prevention function | Operation/Non-operation | Operation |
| Battery drainage prevention function | Battery drainage prevention function | Operation/Non-operation | Operation |
| Auto dimmer cancel (if equipped) | Sensitivity of the operation of the auto dimmer cancel | OFF/Min/Low/Mid/Hi/Max | Mid |

| Item | Function | Available settings | Factory default setting |
|---|---|---|---|
| Auto on/off headlights (if equipped) | Sensitivity of the operation of the auto on/off headlights | Low/Normal/High/Very high | High |
| Auto on/off wiper-linked headlights (models with auto on/off headlights) | Auto-on/off wiper-linked | Operation/Non-operation | Operation |
| Headlight OFF delay setting | Operation of the timer | OFF/30 seconds/60 seconds/90 seconds | 30 seconds |
| High beam assist function (if equipped) | High beam assist function | Operation/Non-operation | Operation |
| One-touch lane changer | Operation of the one-touch lane changer | Operation/Non-operation | Operation |
| Automatic rain sensing windshield wiper (if equipped) | Automatic adjusting mode of wiper timing | Rain-sensing mode/vehicle speed interlocking mode | Rain-sensing mode |
| Reverse gear interlocked rear wiper | Reverse gear interlocked rear wiper | Operation/Non-operation | Operation |
| Defogger and deicer system for models with the automatic climate control system | Rear window defogger, outside mirror defogger and windshield wiper deicer | Operation for 15 minutes/Continuous operation | Operation for 15 minutes |
| Dome light/Map lights/Cargo area light | Operation of dome light/map light/cargo area light OFF delay timer | OFF/10 seconds/20 seconds/30 seconds | 30 seconds |
| Emergency stop signal | Emergency stop signal function | Operation/Non-operation | Operation |
| Deactivate the RAB system when towing a trailer | RAB system function | Operation/Non-operation | Operation |

*1: Applicable to models without double locking system
*2: Applicable to models with double locking system

# Seat, seatbelt and SRS airbags




**Seats** ..... 1-2
- Safety tips ..... 1-2
- Front seats ..... 1-5
- Rear seats ..... 1-6
- Head restraints ..... 1-8

**Seat heater (if equipped)** ..... 1-11

**Seatbelts** ..... 1-12
- Seatbelt safety tips ..... 1-12
- Emergency Locking Retractor (ELR) ..... 1-14
- Automatic Locking Retractor/Emergency Locking Retractor (ALR/ELR) (Australia models) ..... 1-14
- Seatbelt warning light and chime ..... 1-14
- Fastening the seatbelt ..... 1-15
- Seatbelt maintenance ..... 1-21

**Seatbelt pretensioners** ..... 1-21
- Front seatbelt with shoulder belt and lap belt pretensioners ..... 1-21
- Rear window-side seatbelt with shoulder belt pretensioners (if equipped) ..... 1-23
- Seatbelt pretensioners safety tips ..... 1-24
- System monitors ..... 1-24
- System servicing ..... 1-24
- Precautions against vehicle modification ..... 1-25

**Child restraint systems** ..... 1-25
- Applications for Australia models ..... 1-25
- Safety precautions ..... 1-25
- Safety tips for installing child restraint systems ..... 1-27
- Where to place a child restraint system ..... 1-27
- Choosing a child restraint system ..... 1-29
- Only for the models with the front passenger's frontal airbag ON/OFF indicator - When installing child restraint systems to the front passenger's seat ..... 1-34
- Only for the models without the front passenger's frontal airbag ON/OFF indicator - When installing child restraint systems to the front passenger's seat ..... 1-36
- Installing child restraint systems with seatbelt ..... 1-37
- Installing a booster seat ..... 1-42
- Installation of child restraint systems using ISOFIX anchor bars ..... 1-44
- Top tether anchorages ..... 1-47

**SRS airbag (Supplemental Restraint System airbag)** ..... 1-49
- General precautions regarding SRS airbag system ..... 1-49
- General precautions regarding SRS airbag system for accessories and any objects ..... 1-51
- General precautions regarding SRS airbag system for children ..... 1-53
- Components ..... 1-56
- SRS airbag ..... 1-60
- System operation ..... 1-66
- SRS airbag system monitor ..... 1-76
- SRS airbag system servicing ..... 1-77
- Precautions against vehicle modification ..... 1-78

# Seats

## ■ Safety tips

### ▼ Safety tips for seat

**⚠ WARNING**

- **Never adjust the seat while driving to avoid loss of vehicle control and personal injury.**
- **Before adjusting the seat, make sure that cargo and the hands and feet of rear seat passengers are clear of the adjusting mechanism.**
- **After adjusting the seat, move it back and forth to make sure it is securely locked. If the seat is not securely locked, it may move or the seatbelt may not operate properly.**
- **Do not put objects under the front seats. They may interfere with front seat locking and cause an accident.**
- **Seatbelts provide maximum restraint when the occupant sits well back and upright in the seat. To reduce the risk of sliding under the seatbelt in a collision, the front seatbacks should be always used in the upright position while the vehicle is running. If the front seatbacks are not used in the upright position in a collision, the risk of sliding under the lap belt and of the lap belt sliding up over the abdomen will increase, and both can result in serious internal injury or death.**
- **The SRS airbags deploy with considerable speed and force. Occupants who are not in the proper position when the SRS airbag deploys could suffer very serious injuries. Because the SRS airbag needs enough space for deployment, the driver should always sit upright and well back in the seat as far from the steering wheel as practical while still maintaining full vehicle control and the front passenger should move the seat as far back as possible and sit upright and well back in the seat.**

**⚠ WARNING**

**Put children aged 12 and under or 1.5 m (4 feet 11 inches) tall or less in the REAR seat properly restrained at all times in a child restraint device or in a seatbelt, whichever is appropriate for the child's age, height and weight. The SRS airbag deploys with considerable speed and force and can injure or even kill children, especially if they are 12 years of age and under or 1.5 m (4 feet 11 inches) tall or less and are not restrained or improperly restrained. Because children are lighter and weaker than adults, their risk of being injured from deployment is greater.**

**Secure ALL types of child restraint systems (including forward facing child seats) in the REAR seats at all times.**

**NEVER INSTALL A CHILD SEAT IN THE FRONT SEAT. DOING SO RISKS SERIOUS INJURY OR DEATH TO THE CHILD BY PLACING THE CHILD'S HEAD TOO CLOSE TO THE SRS AIRBAG.**

**According to accident statistics, children are safer when properly restrained in the rear seating positions than in the front seating positions. For instructions and precautions concerning child restraint systems, refer to "Child restraint systems" ☞1-25.**

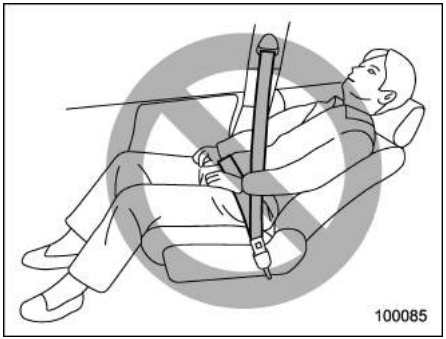


**⚠ WARNING**

**To prevent the passenger from sliding under the seatbelt in the event of a collision, always put the seatback in the upright position while the vehicle is in motion. Also, do not place objects such as cushions between the passenger and the seatback. If you do so, the risk of sliding under the lap belt and of the lap belt sliding up over the abdomen will increase, and both can result in serious internal injury or death.**

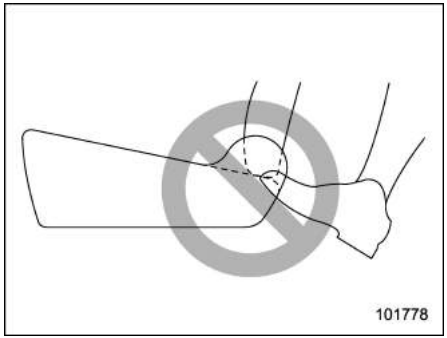


**⚠ WARNING**

**Do not let rear passengers rest their feet between the front seatback and seat cushion. Doing so may lead to defective operation of the following systems and could result in serious injury.**

- **Occupant detection system (if equipped)**
- **SRS side airbag**
- **Seat heater (if equipped)**
- **Power seat (if equipped)**

– CONTINUED –

**WARNING**

**Seatbelts provide maximum restraint when the occupant sits well back and upright in the seat. Do not put cushions or any other materials between occupants and seatbacks or seat cushions. If you do so, the risk of sliding under the lap belt and of the lap belt sliding up over the abdomen will increase, and both can result in serious internal injury or death.**

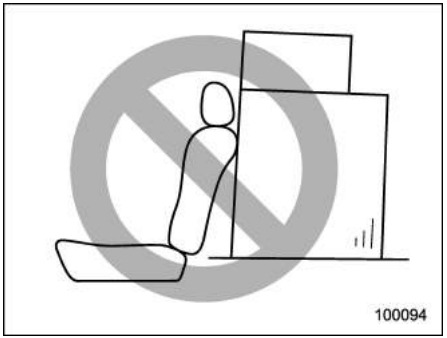


**WARNING**

**Never stack luggage or other cargo higher than the top of the seatback because it could tumble forward and injure passengers in the event of a sudden stop or accident.**

▼ **Safety tips for head restraint**

**WARNING**

- **Never drive the vehicle with the head restraints removed because they are designed to reduce the risk of serious neck injury in the event that the vehicle is struck from the rear. Also, never install the head restraints the opposite way round. Doing so will prevent the head restraints from functioning as intended. Therefore, when you remove the head restraints, you must reinstall all head restraints correctly to protect vehicle occupants.**
- **All occupants, including the driver, should not operate a vehicle or sit in a vehicle's seat until the head restraints are placed in their proper positions in order to minimize the risk of neck injury in the event of a crash.**

## ■ Front seats

### ▼ Manual seat (if equipped)

#### ▽ Forward and backward adjustment

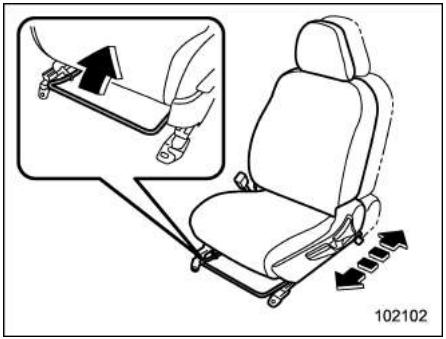


Pull the lever upward and slide the seat to the desired position. Then release the lever and try to move the seat back and forth to make sure that it is securely locked into place.

#### ▽ Reclining the seatback

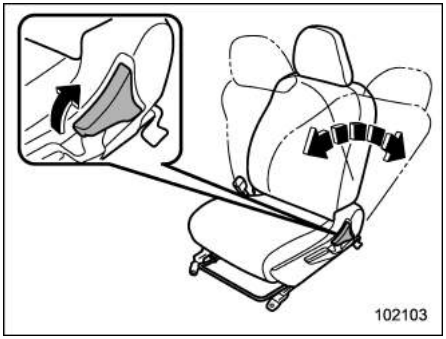


Pull the reclining lever up and adjust the seatback to the desired position. Then release the lever and make sure the seatback is securely locked into place.

The seatback placed in a reclined position can spring back upward with force when the lever is pulled. While operating the lever to return the seatback, hold the seatback lightly so that it may be raised back gradually.

#### ▽ Seat height adjustment (driver's seat)

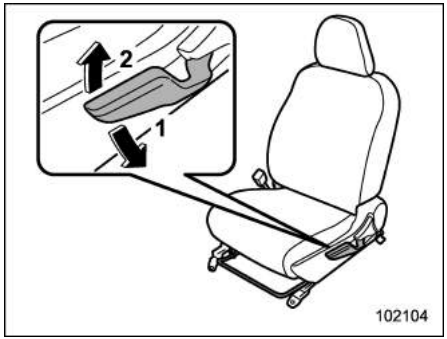


1) When the lever is pushed down, the seat is lowered.
2) When the lever is pulled up, the seat rises.

The height of the seat can be adjusted by moving the seat adjustment lever up and down.

– CONTINUED –

### ▼ Power seat (driver's seat – if equipped)

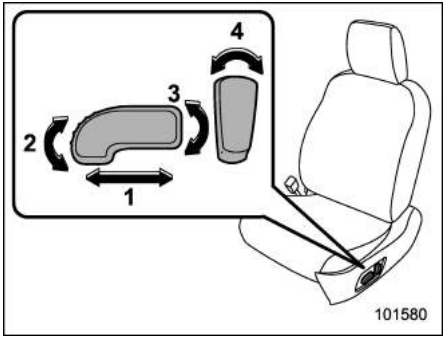


1) **Seat position forward/backward control switch**
   To adjust the seat forward or backward, move the control switch forward or backward. During forward/backward adjustment of the seat, you cannot adjust the seat cushion angle or seat height.
2) **Seat cushion angle control switch**
   To adjust the seat cushion angle, pull up or push down the front end of the control switch.
3) **Seat height control switch**
   To adjust the seat height, pull up or push down the rear end of the control switch.
4) **Seatback angle (reclining) control switch**
   To adjust the angle of the seatback, move the control switch.

## ■ Rear seats

### ▼ Armrest (if equipped)

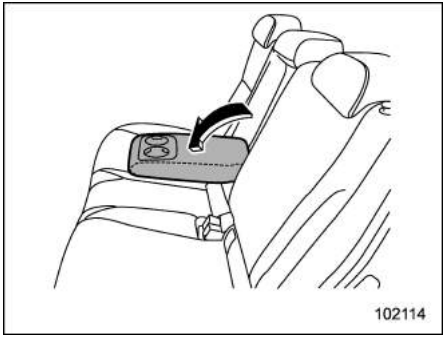


To lower the armrest, pull on the top edge of the armrest.

**⚠ WARNING**

**To avoid serious injury, passengers must never be allowed to sit on the center armrest.**

### ▼ Folding down the rear seatback

**⚠ WARNING**

- **When you fold down the seatback, check that there are no passengers or objects on the rear seat. Not doing so creates a risk of injury or property damage if the seatback suddenly folds down.**
- **Never allow passengers to ride on the folded rear seatback or in the cargo area. Doing so may result in serious injury or death.**
- **Secure all objects and especially long items properly to prevent them from being thrown around inside the vehicle and causing serious injury during a sudden stop, a sudden steering maneuver or a rapid acceleration.**

1. Lower the head restraints.

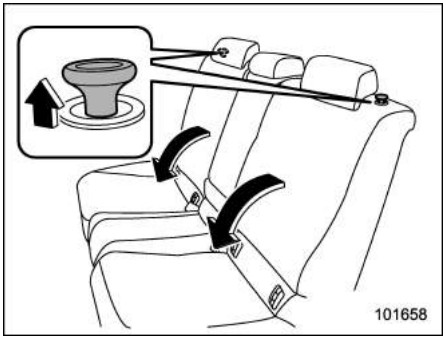


2. Unlock the seatback by pulling the lock release knob and then fold the seatback down.

▼ **Return the rear seatback**

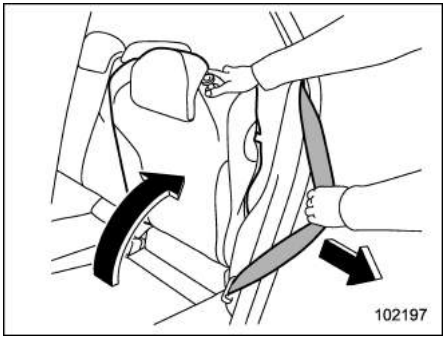


**⚠ WARNING**

**When returning the seatback to its original position, observe the following precaution.**

**Failure to observe the precaution may damage the seatbelt, impairing its effectiveness, and possibly result in a serious injury.**

- **When returning the seatback to its original position, pull the seatbelt out towards the vehicle exterior so that it will not be caught between the seatback and the trim.**

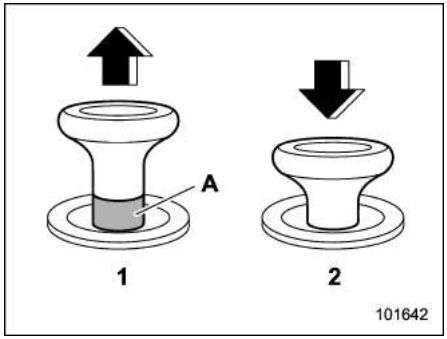


**Lock release knob**
1) Unlocked
2) Locked
A) Unlocking marker in red

To return the seatback to its original position, raise the seatback until it locks into place and make sure that the unlocking marker on the lock release knob is no longer visible.

**⚠ WARNING**

**When you return the seatback to its original position, check that the unlocking marker on the lock release knob is not visible. Also, move the seatback back and forth to confirm that it is securely fixed in place. If the seatback is not securely fixed in place, the seatback may**

– CONTINUED –

**suddenly fold down in the event of sudden braking, or objects may move out from the cargo area, which could cause serious injury or death.**

## ■ Head restraints

**⚠ WARNING**

**The front seat head restraints are designed to be installed into the front seats only. The rear seat head restraints are designed to be installed into the rear seats only. Do not attempt to install the front seat head restraints into the rear seats, or the rear seat head restraints into the front seats.**

### NOTE

**It is possible to adjust the angle of the front seat head restraints only. When installing the front seat head restraints, make sure that the angle of the head restraints can be adjusted.**

### ▼ Front seats

Both the driver's seat and front passenger's seat are equipped with head restraints. Both head restraints are adjustable in the following ways.

#### ▽ Height adjustment

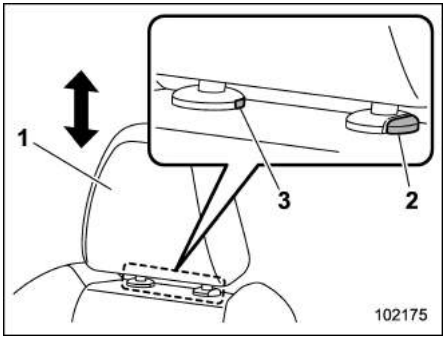


1) Head restraint
2) Release button
3) Remove button

**To raise:**

- Lowermost to the 1st step

Pull the head restraint up.

- 1st step to the 3rd step

Pull the head restraint up while pressing the release button on the top of the seatback.

**To lower:**

Push the head restraint down while pressing the release button on the top of the seatback.

**To remove:**

While pressing the remove button using a key or other hard, pointed object, pull out the head restraint.

**To install:**

Install the head restraint into the holes that are located on the top of the seatback until the head restraint locks.

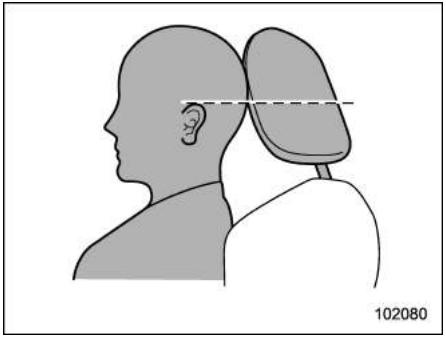


Each head restraint should be adjusted so that the center of the head restraint is closest to the top of the occupant's ears.

## NOTE

**When the head restraint cannot be pulled out or installed due to insufficient clearance between the head restraint and the roof, tilt the seatback and then perform the installation and removal tasks.**

▽ **Angle adjustment**

The angle of the head restraint can be adjusted in several steps. While maintaining a suitable driving posture, adjust the head restraint to a position where the back of your head is as close to the head restraint as possible.

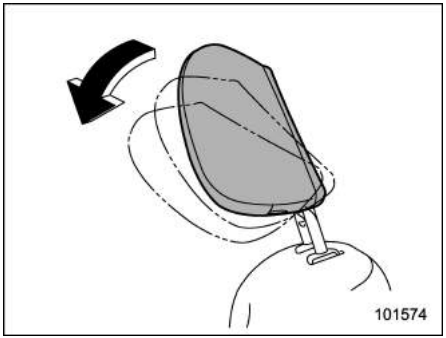


**To tilt:**

Tilt the head restraint by hand to the preferred position. A click will be audible when the head restraint is locked.

**To return:**

Tilt the head restraint once as far forward as it can go. The head restraint will automatically return to the fully upright position. Then, adjust the head restraint again to the preferred angle.

▼ **Rear seats**

Both of the rear window side seats and the rear center seat are equipped with head restraints.

▽ **Rear windows side seating position**

**⚠ CAUTION**

**The head restraint is not intended to be used in the retracted position. Before sitting on the seat, raise the head restraint to the extended position.**

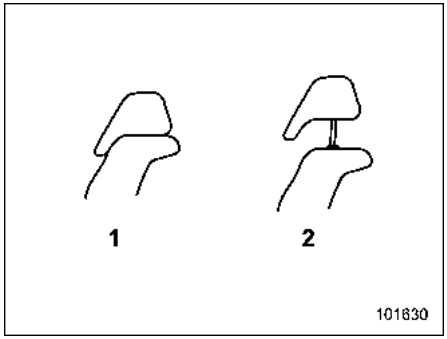


1) When not used (retracted position)
2) When used (extended position)

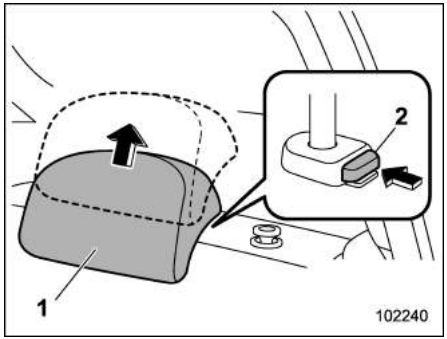


1) Head restraint
2) Release button

**To raise:**

Pull the head restraint up.

– CONTINUED –

**To lower:**

Push the head restraint down while pressing the release button on the top of the seatback.

**To remove:**

While pressing the release button, pull out the head restraint.

**To install:**

Install the head restraint into the holes that are located on the top of the seatback until the head restraint locks.

When the seats are not occupied, lower the head restraints to improve rearward visibility.

▽ **Rear center seating position**

**CAUTION**

**The head restraint is not intended to be used in the retracted position. Before sitting on the seat, raise the head restraint to the extended position.**

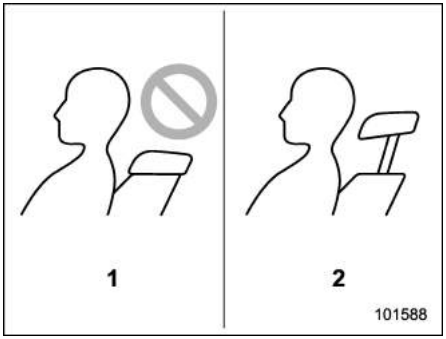


1) Incorrect (retracted position)
2) Correct (extended position)

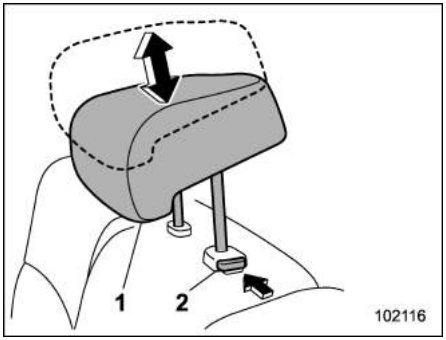


1) Head restraint
2) Release button

**To raise:**

Pull the head restraint up.

**To lower:**

Push the head restraint down while pressing the release button on the top of the seatback.

**To remove:**

While pressing the release button, pull out the head restraint.

**To install:**

Install the head restraint into the holes that are located on the top of the seatback until the head restraint locks.

When the rear center seating position is not occupied, lower the head restraint to improve rearward visibility.

## Seat heater (if equipped)

The seat heater is equipped in the front seats.

The seat heater operates when the ignition switch is either in the “ACC” or “ON” position.

**CAUTION**

- **There is a possibility that people with delicate skin may suffer slight burns even at low temperatures if they use the seat heater for a long period of time. When using the heater, always be sure to warn the persons concerned.**
- **Do not put anything on the seat which insulates against heat, such as a blanket, cushion, or similar items. This may cause the seat heater to overheat.**
- **When the seat is warmed enough or before you leave the vehicle, be sure to turn off the seat heater.**

### NOTE

**Use of the seat heater for a long period of time while the engine is not running can cause battery discharge.**

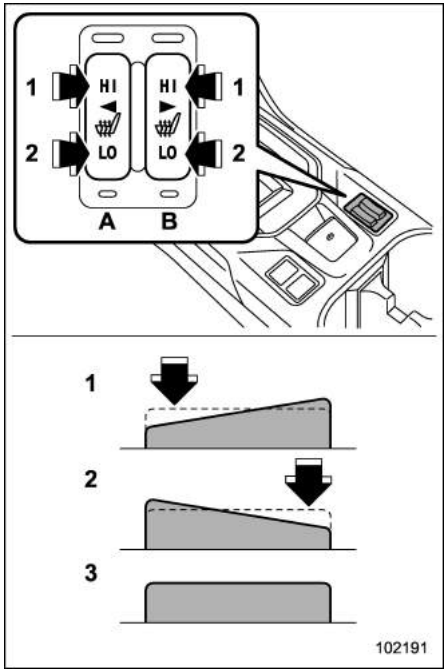


1) **HI** – Rapid heating
2) **LO** – Normal heating
3) Off
A) Left-hand side
B) Right-hand side

To turn on the seat heater, push the “LO” or “HI” position on the switch, as desired, depending on the temperature.

Selecting the “HI” position will cause the seat to heat up quicker.

To turn off the seat heater, lightly press the opposite side of the current position.

The indicator located on the switch illuminates when the seat heater is in operation.

# Seatbelts

## ■ Seatbelt safety tips

**WARNING**

- All persons in the vehicle must fasten their seatbelts BEFORE the vehicle starts to move. Otherwise, the possibility of serious injury becomes greater in the event of a sudden stop or accident.
- All belts should fit snugly in order to provide full restraint. Loose fitting belts are not as effective in preventing or reducing injury.
- Each seatbelt is designed to support only one person. Never use a single belt for two or more persons – even children. Otherwise, in an accident, serious injury or death could result.
- Replace all seatbelt assemblies including retractors and attaching hardware worn by occupants of a vehicle that has been in a serious accident. Also, be sure to replace seatbelt assemblies that show signs of severe fraying or having been cut. The entire assembly should be replaced even if damage is not obvious.
- When replacing a seatbelt, the new seatbelt must be type-approved and intended for installation in the same position as the replaced seatbelt.
- When wearing the seatbelt, insert the tongue plate into the correct buckle. Otherwise, in an accident, serious injury or death could result.
- Do not fasten your seatbelt with a child on your knees. Otherwise, in an accident, serious injury or death could result.
- Never use a belt that is twisted or reversed. In an accident, this can increase the risk or severity of injury.
- Keep the lap belt as low as possible on your hips. In a collision, this spreads the force of the lap belt over stronger hip bones instead of across the weaker abdomen.
- Seatbelts provide maximum restraint when the occupant sits well back and upright in the seat. To reduce the risk of sliding under the seatbelt in a collision, the front seatbacks should be always used in the upright position while the vehicle is running. If the front seatbacks are not used in the upright position in a collision, the risk of sliding under the lap belt and of the lap belt sliding up over the abdomen will increase, and both can result in serious internal injury or death.
- Do not put cushions or any other materials between occupants and seatbacks or seat cushions. If you do so, the risk of sliding under the lap belt and of the lap belt sliding up over the abdomen will increase, and both can result in serious internal injury or death.

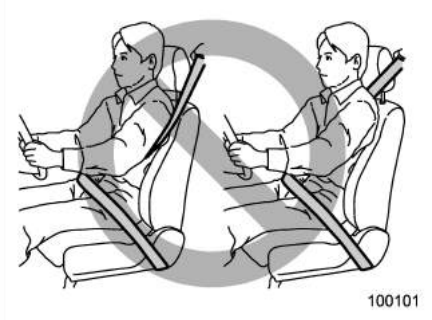

**WARNING**

**Never place the shoulder belt under the arm or behind the back. If an accident occurs, this can increase the risk or severity of injury.**

**CAUTION**

**Metallic parts of the seatbelt can become very hot in a vehicle that has been closed up in sunny weather; they could burn an occupant. Do not touch such hot parts until they cool.**

▼ **Infants or small children**

Use a child restraint system that is suitable for your vehicle. Refer to "Child restraint systems" ☞1-25.

▼ **Children**

**WARNING**

**Put children aged 12 and under or 1.5 m (4 feet 11 inches) tall or less in the REAR seat properly restrained at all times in a child restraint device or in a seatbelt, whichever is appropriate for the child's age, height and weight. The SRS airbag deploys with considerable speed and force and can injure or even kill children, especially if they are 12 years of age and under or 1.5 m (4 feet 11 inches) tall or less and are not restrained or improperly restrained. Because children are lighter and weaker than adults, their risk of being injured from deployment is greater.**

**Secure ALL types of child restraint devices (including forward facing child seats) in the REAR seats at all times.**

**NEVER INSTALL A CHILD SEAT IN THE FRONT SEAT. DOING SO RISKS SERIOUS INJURY OR DEATH TO THE CHILD BY PLACING THE CHILD'S HEAD TOO CLOSE TO THE SRS AIRBAG.**

**According to accident statistics, children are safer when properly restrained in the rear seating positions than in the front seating positions. For instructions and precautions concerning the child restraint system, refer to "Child restraint systems" ☞1-25.**

If a child is too big for a child restraint system, the child should sit in the rear seat and be restrained using the seatbelts. According to accident statistics, children are safer when properly restrained in the rear seating positions than in the front seating positions. Never allow a child to stand up or kneel on the seat.

Seatbelts are designed under the assumption that adult-sized occupants will use them. If the shoulder portion of the belt crosses the face or neck, move the child closer to the belt buckle to help provide a good shoulder belt fit. Care must be taken to securely place the lap belt as low as possible on the hips and not on the child's waist. If the shoulder portion of the belt cannot be properly positioned, a child restraint system should be used. Never place the shoulder belt under the child's arm or behind the child's back.

– CONTINUED –

▼ **Expectant mothers**

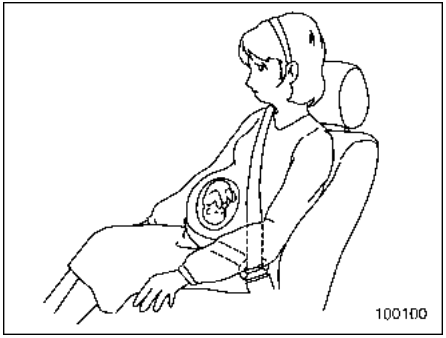


Expectant mothers also need to use the seatbelts. They should consult their doctor for specific recommendations. The lap belt should be worn securely and as low as possible over the hips, not over the waist.

## ■ Emergency Locking Retractor (ELR)

All seatbelts in the vehicle have an Emergency Locking Retractor (ELR).

The emergency locking retractor allows normal body movement but the retractor locks automatically during a sudden stop, impact or if you pull the belt very quickly out of the retractor.

## ■ Automatic Locking Retractor/ Emergency Locking Retractor (ALR/ELR) (Australia models)

For some models, each rear passenger's seatbelt has an Automatic Locking Retractor/Emergency Locking Retractor (ALR/ELR). The Automatic Locking Retractor/Emergency Locking Retractor normally functions as an Emergency Locking Retractor (ELR). The ALR/ELR has an additional locking mode, "Automatic Locking Retractor (ALR) mode", intended to secure a child restraint system.

First check if the ALR mode is equipped for the seatbelts of the vehicle. If the ALR mode is equipped, the seatbelts function as follows.

When a seatbelt is once drawn out completely and is then retracted even slightly, the retractor locks the seatbelt in that position and the seatbelt cannot be extended. As the belt is rewinding, clicks will be heard which indicate the retractor functions as an ALR. When the seatbelt is retracted fully, the ALR mode is canceled and the ELR mode is restored.

For models with ALR/ELR seatbelts, when securing a child restraint system on the rear seats by using a seatbelt in the forward-facing direction, the seatbelt must be changed over to the Automatic Locking Retractor (ALR) mode. For instructions on how to install the child restraint system using a seatbelt, refer to "Installing child restraint systems with seatbelt" ☞1-37.

When the child restraint system is removed, make sure that the retractor is restored to the Emergency Locking Retractor (ELR) mode by allowing the seatbelt to retract fully.

## ■ Seatbelt warning light and chime

Refer to "Seatbelt warning light and chime" ☞3-14.

## ■ Fastening the seatbelt

### ▼ Front seatbelts

1. Adjust the seat position according to the following procedure.

**Driver's seat:** Adjust the seatback to the upright position. Move the seatback as far from the steering wheel as practical while still maintaining full vehicle control.

**Front passenger's seat:** Adjust the seatback to the upright position. Move the seat as far back as possible.

2. Sit well back in the seat.
3. Pick up the tongue plate and pull the belt out slowly. Do not let it get twisted.
   - If the belt stops before reaching the buckle, return the belt slightly and pull it out more slowly.
   - If the belt still cannot be unlocked, let the belt retract slightly after giving it a strong pull, then pull it out slowly again.

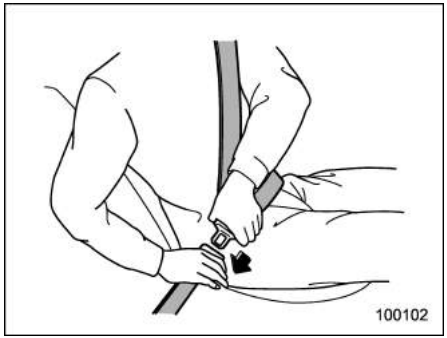


4. Insert the tongue plate into the buckle until you hear a click.

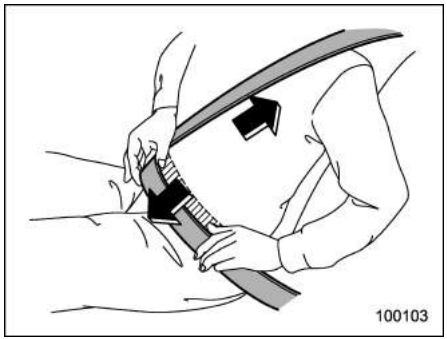


5. To make the lap part tight, pull up on the shoulder belt.
6. Place the lap belt as low as possible on your hips, not on your waist.

### ▽ Adjusting the front seat shoulder belt anchor height

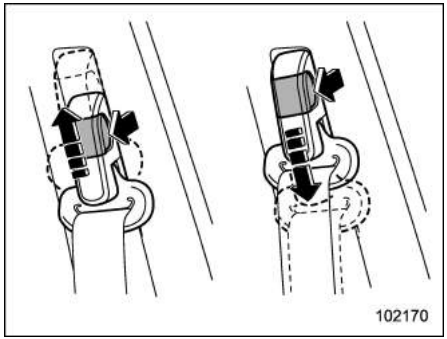


The shoulder belt anchor height should be adjusted to the position best suited for the driver/front passenger. Always adjust the anchor height so that the shoulder belt passes over the middle of the shoulder without touching the neck.

**To raise:**

Pull the release knob and slide the anchor up.

**To lower:**

Pull the release knob and slide the anchor down.

Pull down on the anchor to make sure that it is locked in place.

– CONTINUED –

**⚠ WARNING**

**When wearing the seatbelts, make sure the shoulder portion of the webbing does not pass over your neck. If it does, adjust the seatbelt anchor to a lower position. Placing the shoulder belt over the neck may result in neck injury during sudden braking or in a collision.**

### ▽ Unfastening the seatbelt

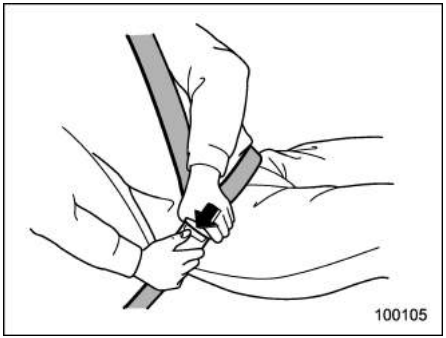


1. Push the button on the buckle.
2. Have the seatbelt retracted slowly to avoid the seatbelt being tangled or twisted.

Before closing the door, make sure that the belts are retracted properly to avoid catching the belt webbing in the door.

### ▼ Rear seatbelts (except rear center seatbelt)

1. Sit well back in the seat.
2. Pick up the tongue plate and pull the belt out slowly. Do not let it get twisted.
   - If the belt stops before reaching the buckle, return the belt slightly and pull it out more slowly.
   - If the belt still cannot be unlocked, let the belt retract slightly after giving a strong pull on it, then pull it out slowly again.

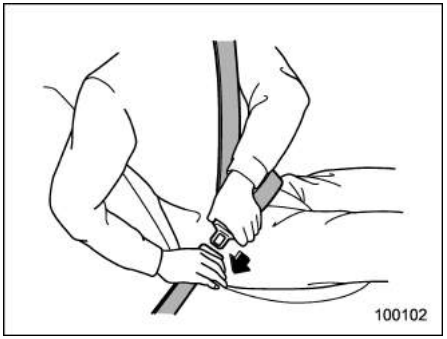


3. Insert the tongue plate into the buckle until you hear a click.

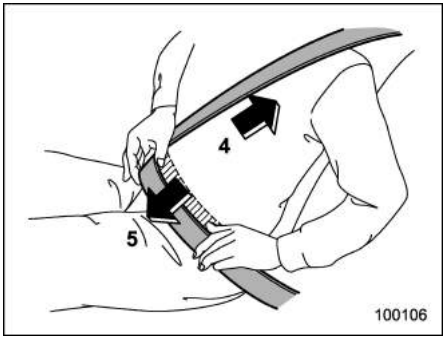


4. To make the lap part tight, pull up on the shoulder belt.
5. Place the lap belt as low as possible on your hips, not on your waist.

### ▽ Unfastening the seatbelt

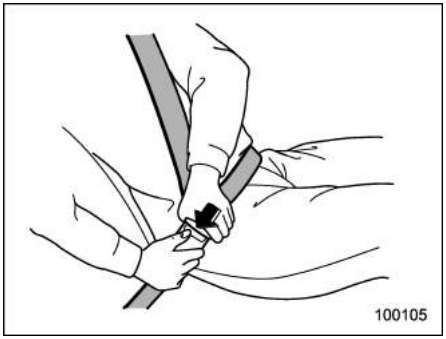


1. Push the button on the buckle.
2. Have the seatbelt retracted slowly to avoid the seatbelt being tangled or twisted.

Before closing the door, make sure that the belts are retracted properly to avoid catching the belt webbing in the door.

### ▼ Rear center seatbelt

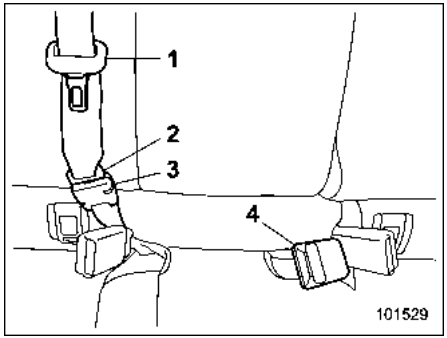


1) Center seatbelt tongue plate
2) Connector (tongue)
3) Connector (buckle)
4) Center seatbelt buckle

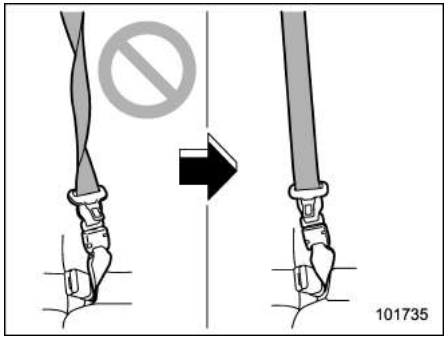


**⚠ WARNING**

**Fastening the seatbelt with the webbing twisted can increase the risk or severity of injury in an accident. When fastening the belt after it is pulled out from the retractor, especially when inserting the connector's tongue plate into the mating buckle (on right-hand side), always check that the webbing is not twisted.**

– CONTINUED –

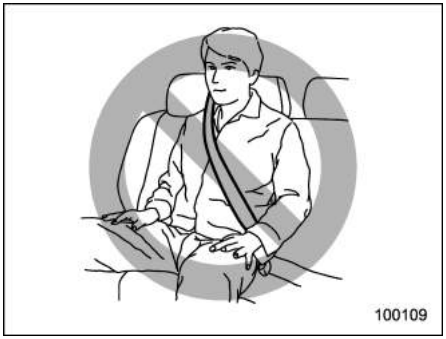


**WARNING**

- **Be sure to fasten both tongue plates to the respective buckles. If the seatbelt is used only as a shoulder belt (with the connector's tongue plate not fastened to the connector's buckle on the right-hand side), it cannot properly restrain the wearer in position in an accident, possibly resulting in serious injury or death.**
- **Be sure to raise the head restraint to the extended position before passing the seatbelt through the belt guide. Using the belt guide with the head restraint at the retracted position may result in serious injury.**

The rear center seatbelt is stowed in the seatbelt holder on the right side of the cargo area.

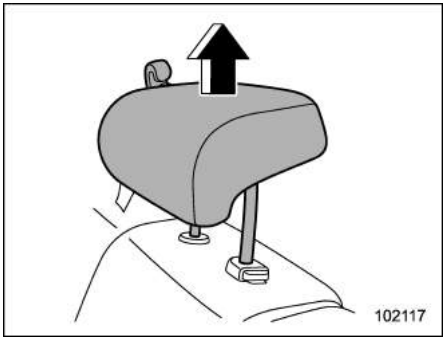


1. Raise the head restraint to the extended position. Do not remove the head restraint.

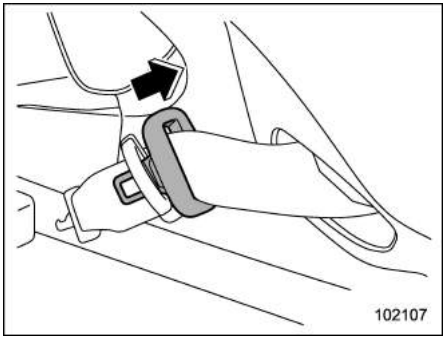


2. Remove the tongue plate from the belt holder and pull out the seatbelt slowly.

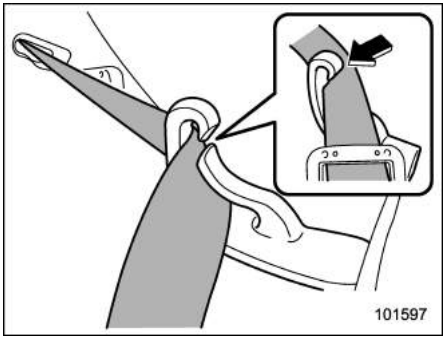


3. After drawing out the seatbelt, pass it through the belt guide as follows: First insert one edge of the belt into the open gap in the belt guide; then slide the rest of

the belt in, so that the whole belt fits inside.

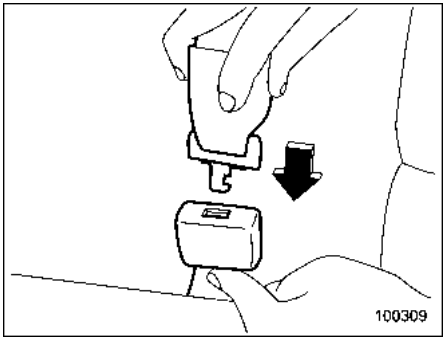


4. After confirming that the webbing is not twisted, insert the connector (tongue) attached at the webbing end into the buckle on the right-hand side until a click is heard.
   - If the belt stops before reaching the buckle, return the belt slightly and pull it out more slowly.
   - If the belt still cannot be unlocked, let the belt retract slightly after giving it a strong pull, then pull it out slowly again.

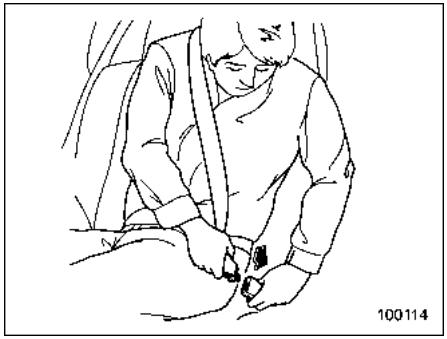


5. Insert the center seatbelt tongue plate in the center seatbelt buckle marked “CENTER” on the left-hand side until it clicks.

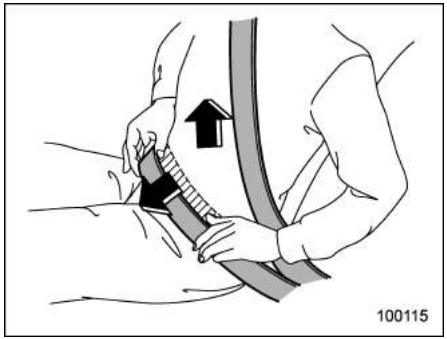


6. To make the lap part tight, pull up on the shoulder belt.

7. Place the lap belt as low as possible on your hips, not on your waist.

### ▽ Unfastening the seatbelt

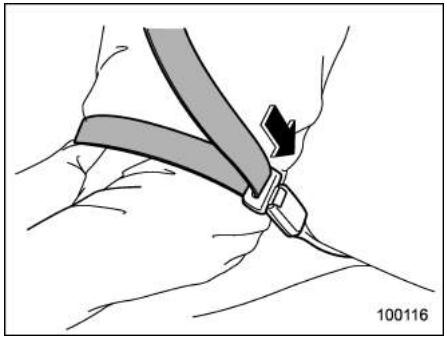


1. Push the release button of the center seatbelt buckle (on the left-hand side) to unfasten the seatbelt.

## NOTE

**When the seatback is folded down for greater cargo area, it is necessary to disconnect the connector.**

– CONTINUED –

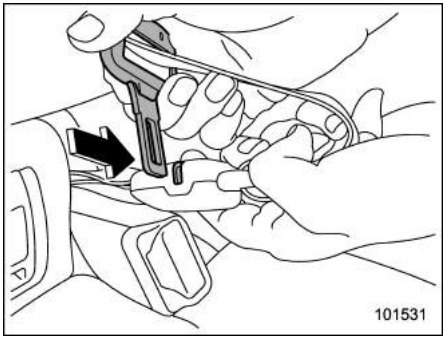


2. Insert a tongue plate or other hard pointed object into the slot in the connector (buckle) on the right-hand side and push it in. The connector (tongue) plate will then disconnect from the buckle.

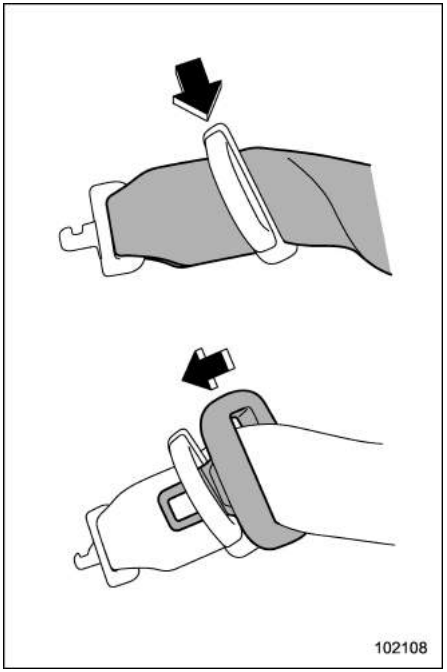


3. Allow the retractor to roll up the belt. You should hold the webbing end and guide it back into the retractor while it is rolling up. Then, pass the webbing under the belt holder and insert the tongue plate into the holder.

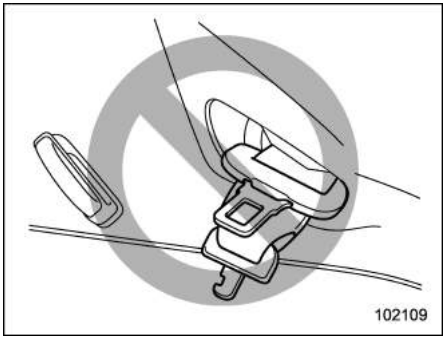


**CAUTION**

- **Do not allow the retractor to roll up the seatbelt too quickly. Otherwise, the metal tongue plates may hit against the trim, resulting in damaged trim.**
- **Have the seatbelt fully rolled up so that the tongue plates are neatly stored. A hanging tongue plate can swing and hit against the trim during driving, causing damage to the trim.**

## ■ Seatbelt maintenance

To clean the seatbelts, use a mild soap and lukewarm water. Never bleach or dye the belts because this could seriously affect their strength.

Inspect the seatbelts and attachments including the webbing and all hardware periodically for cracks, cuts, gashes, tears, damage, loose bolts or worn areas. Replace the seatbelts even if only minor damage is found.

**⚠ CAUTION**

- **Keep the belts free of polishes, oils, chemicals and particularly battery acid.**
- **Never attempt to make modifications or changes that will prevent the seatbelt from operating properly.**

# Seatbelt pretensioners

The following seatbelts have a seatbelt pretensioner.

- Driver's seatbelt
- Front passenger's seatbelt
- Rear window-side seatbelt (if equipped)

The seatbelt pretensioners are designed to be activated in the event of an accident involving a moderate to severe frontal or side collision.

## ■ Front seatbelt with shoulder belt and lap belt pretensioners

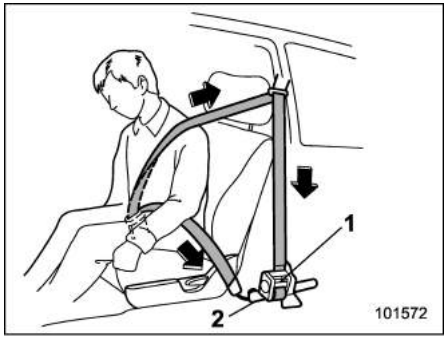


1) Seatbelt retractor assembly (shoulder belt pretensioner and adaptive force limiter (if equipped))
2) Lap belt pretensioner

The pretensioner sensor also serves as follows:

- SRS frontal airbag sensor
- Side impact sensor
- Front door impact sensor
- Rollover sensor (Russia models only)

If the sensor detects a certain predetermined amount of force during a frontal or side collision, the front seatbelt is quickly drawn in by the pretensioner to take up the slack so that the belt more effectively

– CONTINUED –

restrains the front seat occupant.

The driver's and front passenger's seatbelt pretensioner includes a tension reducing device which limits the peak forces exerted by the seatbelt on the occupant in the event of a collision.

- Adaptive force limiter (if equipped)

The driver's side adaptive force limiter will select a reducing load to the suit body size of occupant as detected by the driver's seat position sensor.

The front passenger's side adaptive force limiter will select a reducing load to the suit body size of occupant as detected by the occupant detection sensor.

- When a seatbelt pretensioner is activated

An operating noise will be heard and a small amount of smoke will be released. These occurrences are normal and not harmful. This smoke does not indicate a fire in the vehicle.

Once the seatbelt pretensioner has been activated, the seatbelt retractor remains locked. Consequently, the seatbelt cannot be pulled out and retracted and therefore must be replaced.

### ▼ In cases of rollover accident, frontal collisions or side collisions, the following components will operate simultaneously

| | Front seats shoulder belt pretensioners | Front seats lap belt pretensioners | Rear window-side passenger seatbelt pretensioner (if equipped) |
|---|---|---|---|
| Frontal collisions | ○ | ○ | ○ |
| Side collisions*1 | ○ | – | – |
| Side collisions*2 | – | – | – |
| Rollover accidents*3 | ○ | – | – |
| Rear impact | – | – | – |
| Minor impact | – | – | – |

○: Activated
–: Not activated

*1: When the center pillar impact sensors or front door impact sensors sense an impact force
*2: When the rear wheel house impact sensors sense an impact force
*3: Russia model only

## NOTE

- **Seatbelt pretensioners are not designed to be activated in minor frontal impacts or rear impacts.**
- **The driver's and passenger's seatbelt pretensioners and SRS frontal airbags operate simultaneously. In models with front passenger's occupant detection system, even if the front passenger's SRS frontal airbag does not operate as the front passenger's seat is not occupied, the seatbelt pretensioner for the front passenger's seat will operate in combination with the driver's SRS frontal airbag/seatbelt pretensioner.**
- **Pretensioners are designed to function on a one-time-only basis. In the event that a pretensioner is activated, we recommend that you have both the driver's and front passenger's seatbelt retractor assemblies replaced with genuine SUBARU parts by your authorized SUBARU dealer.**
- **If either front seatbelt does not retract or cannot be pulled out due to a malfunction or activation of the pretensioner, we recommend that you contact your SUBARU dealer as soon as possible. When using a seatbelt equipped with a load limiter, it is installed in the front seating position.**
- **If the front seatbelt retractor assembly or surrounding area has been damaged, we recommend that you contact your SUBARU dealer as soon as possible.**
- **When you sell your vehicle, we urge you to explain to the buyer that it has seatbelt pretensioners by alerting the buyer to the contents of this section.**

## ■ Rear window-side seatbelt with shoulder belt pretensioners (if equipped)

**Rear window-side seatbelt pretensioner**

If the SRS frontal airbag sensors detect a certain predetermined amount of force during a frontal collision, the rear window-side seatbelt is quickly drawn in by the pretensioner to take up the slack so that the belt more effectively restrains the rear window-side seat occupant.

When a seatbelt pretensioner is activated, an operating noise will be heard and a small amount of smoke will be released. These occurrences are normal and not harmful. This smoke does not indicate a fire in the vehicle.

Once the seatbelt pretensioner has been activated, the seatbelt retractor remains locked. Consequently, the seatbelt cannot be pulled out and retracted and therefore must be replaced.

## NOTE

- **Seatbelt pretensioners are not designed to be activated in minor frontal impacts, in side or rear impacts or in rollover accidents.**
- **The rear window-side seatbelt pretensioners and SRS frontal airbags operate simultaneously.**
- **Pretensioners are designed to function on a one-time-only basis. In the event that a pretensioner is activated, we recommend that you have both the rear window-side seatbelt retractor assemblies replaced with genuine SUBARU parts by your authorized SUBARU dealer.**

– CONTINUED –

- **If either rear window-side seatbelt does not retract or cannot be pulled out due to a malfunction or activation of the pretensioner, we recommend that you contact your SUBARU dealer as soon as possible. When using a seatbelt equipped with a load limiter, it is installed in the rear window-side seating position.**
- **If the rear window-side seatbelt retractor assembly or surrounding area has been damaged, we recommend that you contact your SUBARU dealer as soon as possible.**
- **When you sell your vehicle, we urge you to explain to the buyer that it has seatbelt pretensioners by alerting the buyer to the contents of this section.**

## ■ Seatbelt pretensioners safety tips

**⚠ WARNING**

- **To obtain maximum protection, the occupants should sit in an upright position with their seatbelts properly fastened. Refer to "Seatbelts" ☞1-12.**
- **Do not modify, remove or strike the seatbelt retractor assemblies equipped with seatbelt pretensioners or surrounding area. This could result in accidental activation of the seatbelt pretensioners or could make the system inoperative, possibly resulting in serious injury. Seatbelt pretensioners have no user-serviceable parts. For required servicing of seatbelt retractors equipped with seatbelt pretensioners, consult your SUBARU dealer.**
- **When discarding seatbelt retractor assemblies equipped with seatbelt pretensioners or scrapping the entire vehicle due to collision damage or for other reasons, we recommend that you consult your SUBARU dealer.**

## ■ System monitors

A diagnostic system continually monitors the readiness of the seatbelt pretensioner with the ignition switch in the "ON" position. The seatbelt pretensioners share the control module with the SRS airbag system. Therefore, if any malfunction occurs in a seatbelt pretensioner, the SRS airbag system warning light will illuminate. For details, refer to "SRS airbag system monitor" ☞1-76.

## ■ System servicing

**⚠ WARNING**

- **When discarding a seatbelt retractor assembly or scrapping the entire vehicle damaged by a collision, we recommend that you consult your SUBARU dealer.**
- **Tampering with or disconnecting the system's wiring could result in accidental activation of the seatbelt pretensioner and/or SRS airbag or could make the system inoperative, which may result in serious injury. Do not use electrical test equipment on any circuit related to the seatbelt pretensioner and SRS airbag systems. For required servicing of the seatbelt pretensioner, we recommend that you consult your nearest SUBARU dealer.**

**⚠ CAUTION**

**For the location of the sensors and the SRS airbag control modules, refer to "Components" ☞1-56.**

**If you need service or repair in those areas or near the seatbelt retractors,**

**we recommend that you have the work performed by your authorized SUBARU dealer.**

## NOTE

**If the front or side part of the vehicle is damaged in an accident to the extent that the seatbelt pretensioner does not operate, we recommend that you contact your SUBARU dealer as soon as possible.**

### ■ Precautions against vehicle modification

We recommend that you consult your SUBARU dealer if you want to install any accessory parts to your vehicle.

**⚠ CAUTION**

**Do not perform any of the following modifications. Such modifications can interfere with proper operation of the seatbelt pretensioners.**

- **Attachment of any equipment (bush bar, bullbar, winches, snow plow, skid/sump plate, etc.) to the front end other than genuine SUBARU accessory parts or parts that match the quality of genuine SUBARU accessory parts.**
- **Modification of the suspension system or front end structure.**
- **Installation of a tire of different size and construction from the tires specified on the vehicle placard attached to the driver's door pillar or specified for individual vehicle models in this Owner's Manual.**

## Child restraint systems

### ■ Applications for Australia models

**Refer to the Owner's Manual supplement for the instructions of the child restraint system.**

### ■ Safety precautions

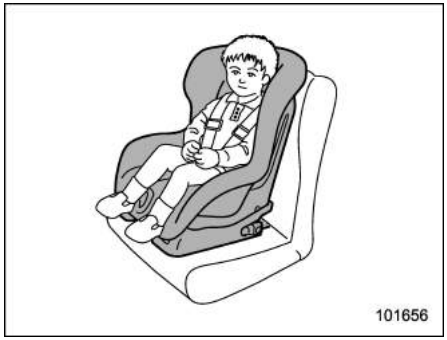


Infants and small children aged 12 and under or 1.5 m (4 feet 11 inches) tall or less should always be placed in an infant or child restraint system in the rear seat while riding in the vehicle. You should use an infant or child restraint system that is appropriate for the child's age and size. All child restraint systems are designed to be secured in the vehicle seats.

– CONTINUED –

Children could be endangered in an accident if their child restraints are not properly secured in the vehicle. When installing the child restraint system, carefully follow the manufacturer's instructions.

According to accident statistics, children are safer when properly restrained in the rear seating positions than in the front seating positions.

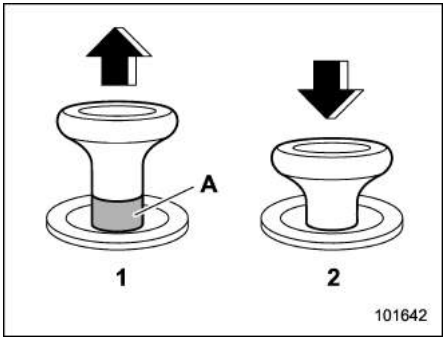


**Lock release knob**
1) Unlocked
2) Locked
A) Unlocking marker in red

**WARNING**

**Before installing a child restraint system, check that the unlocking marker on the seatback lock release knob cannot be seen to confirm that the rear seatback is securely locked in position. If the rear seatback is not locked securely, serious injury may result.**

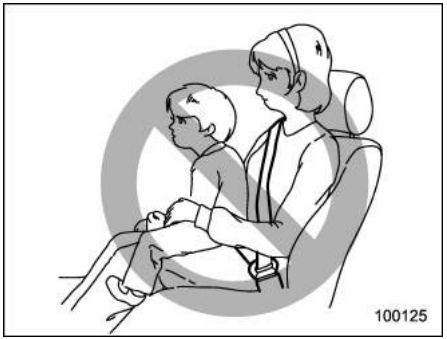


**WARNING**

**Never let a passenger hold a child on his or her lap or in his or her arms while the vehicle is moving. The passenger cannot protect the child from injury in a collision, because the child will be caught between the passenger and objects inside the vehicle.**

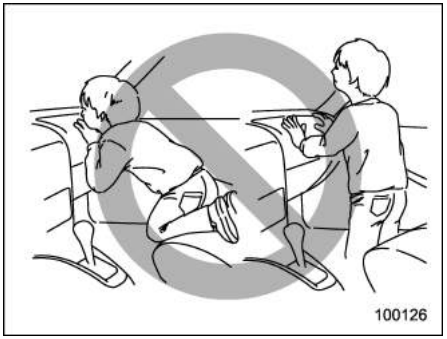


**WARNING**

- **Children should be properly restrained at all times. Never allow a child to stand up, or to kneel on any seat. Unrestrained children will be thrown forward during sudden stop or in an accident and can be injured seriously.**
- **Never allow a child to stand up, or to kneel on the front passenger's seat, or never hold a child on your lap or in your arms. The SRS airbag deploys with considerable force and can injure or even kill the child.**

## Safety tips for installing child restraint systems

**WARNING**

- **Child restraint systems and seatbelts can become hot in a vehicle that has been closed up in sunny weather; they could burn a small child. Check the child restraint system before you place a child in it.**
- **Do not leave an unsecured child restraint system in your vehicle. Unsecured child restraint systems can be thrown around inside of the vehicle in a sudden stop, turn or accident; they can strike and injure vehicle occupants as well as result in serious injuries or death to the child.**

**CAUTION**

**When you install a child restraint system, follow the manufacturer's instructions supplied with it. After installing the child restraint system, check to ensure that it is held securely in position. If it is not held tight and secure, the danger of your child suffering personal injury in the event of an accident may be increased.**

## Where to place a child restraint system

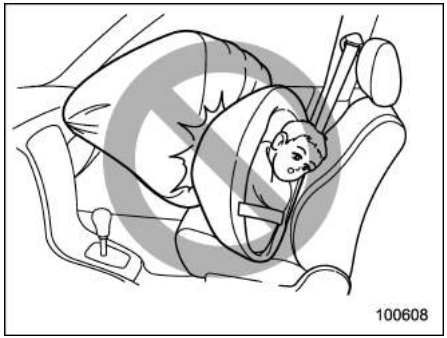


The following are SUBARU's recommendations on where to place a child restraint system in your vehicle.

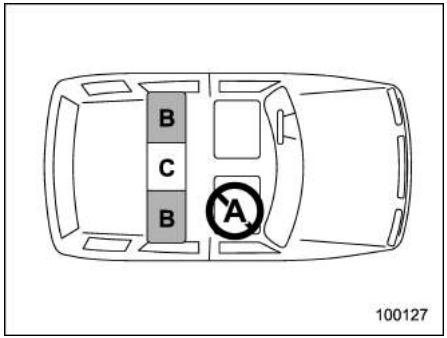


**Left-hand drive models**

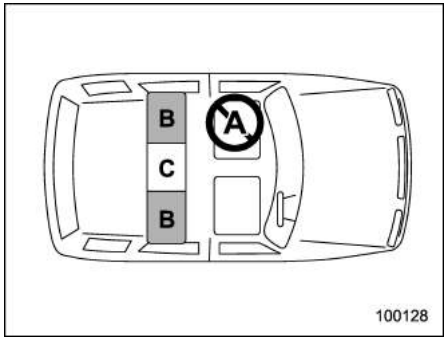


**Right-hand drive models**

**A: Front passenger's seat**

Do not install a child restraint system (including a booster cushion) due to the hazard to children posed by the passen-

– CONTINUED –

ger's airbag.

**For the models with the front passenger's frontal airbag ON/OFF indicator:**

Child restraint system (including a booster seat) can be installed on this seat when it is unavoidable. Be sure to follow the instructions shown in the following. Refer to "Only for the models with the front passenger's frontal airbag ON/OFF indicator - When installing child restraint systems to the front passenger's seat" ☞1-34.

**For the models without the front passenger's frontal airbag ON/OFF indicator:**

Only forward facing child restraint systems (including booster seats) can be installed on this seat and should only be installed when it is unavoidable. Be sure to follow the instructions shown in the following. Refer to "Only for the models without the front passenger's frontal airbag ON/OFF indicator - When installing child restraint systems to the front passenger's seat" ☞1-36.

**B: Rear seat, window-side seating positions**

Recommended positions for all types of child restraint systems.

In these positions, the following equipment is provided for installing a child restraint system.

- Emergency Locking Retractor (ELR) seatbelts
- Automatic Locking Retractor/Emergency Locking Retractor (ALR/ELR) seatbelts (Australia models)
- ISOFIX anchor bars
- Top tether anchorages

Some types of child restraints might not be able to be secured firmly due to projection of the seat cushion.

In this seating position, you should use only a child restraint system that has a bottom base that fits snugly against the contours of the seat cushion and can be securely retained using the seatbelt.

**C: Rear seat, center seating position**

The ELR seatbelt is provided in this position. Some types of child restraints might not be able to be secured firmly due to projection of the seat cushion.

In this seating position, you should use only a child restraint system that has a bottom base that fits snugly against the contours of the seat cushion and can be securely retained using the seatbelt.

When you install a child restraint system in the rear seat's center seating position, raise the center head restraint.

If a child restraint system is not correctly fixed in place, you should install the child restraint system in a rear seat, window-side seating position.

**⚠ WARNING**

- **Secure ALL types of child restraint systems (including forward facing child seats) in the REAR seats at all times. The SRS airbag deploys with considerable speed and force and can injure or even kill children, especially if they are not restrained or improperly restrained. Because children are lighter and weaker than adults, their risk of being injured from deployment is greater. According to accident statistics, children are safer when properly restrained in the rear seating positions than in the front seating positions.**
- **NEVER INSTALL A CHILD SEAT IN THE FRONT SEAT. DOING SO RISKS SERIOUS INJURY OR DEATH TO THE CHILD BY PLACING THE CHILD'S HEAD TOO CLOSE TO THE SRS AIRBAG.**

- **Never install a child restraint system in the front passenger's seat. The force of the rapid deployment of the front passenger's SRS frontal airbag can cause death or serious injury to the child in the event of an accident.**

▼ **Warning label**

**⚠ WARNING**

- **Warning labels are located on both sides of the front passenger's sun visor. The warning label indicates that it is forbidden to install a rearward facing child restraint system in the front passenger's seat.**
- **NEVER use a rearward facing child restraint on a seat protected by an ACTIVE AIRBAG in front of it, DEATH or SERIOUS INJURY to the CHILD can occur.**

**Warning label**

A) AIRBAG

## ■ Choosing a child restraint system

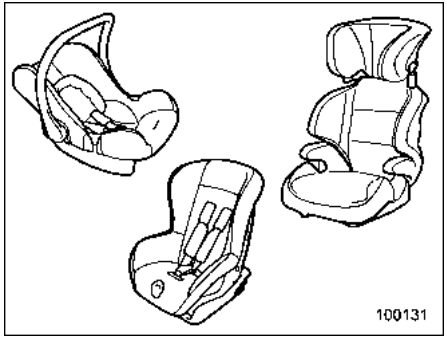


Choose a child restraint system that is appropriate for the child's size and age to provide the child with proper protection.

Also it is important that the child restraint system meets safety standards applicable to your country.

In most European countries, child restraint systems must meet the requirement of ECE regulation No.44 or No.129. It can be identified by looking for the approval label on the child restraint system or the manufacturer's statement of compliance on the box and the system.

According to the ECE regulation No.44 or No.129, child restraint systems are classified into the following five "mass groups".

– CONTINUED –

**Group 0:** for children of a mass less than 10 kg
**Group 0+:** for children of a mass less than 13 kg
**Group I:** for children of mass from 9 to 18 kg
**Group II:** for children of mass from 15 to 25 kg
**Group III:** for children of mass from 22 to 36 kg

For European countries, refer to the following table for the recommended child restraint system.

## ▼ Child Restraint System

**Child restraint suitability for each seating position**

| Seat position number | | | 1 | | | 2 | 3 | 4 |
|---|---|---|---|---|---|---|---|---|
| Seat position | | | Front passenger | | | 2nd row left | 2nd row center | 2nd row right |
| | | | Without occupant detection system | With occupant detection system | | | | |
| | | | | Airbag ON | Airbag OFF | | | |
| Seating position suitable for universal belted | | | Forward only | Forward only | Applicable | Applicable | Applicable*1 | Applicable |
| i-Size seating position (if applicable) | | | — | — | — | Applicable | — | Applicable |
| Seating position suitable for lateral fixture (L1/L2) | | | — | — | — | Not applicable | — | Not applicable |
| Largest suitable rearward facing fixture (R1/R2/R3) | | | — | — | — | R3 | — | R3 |
| Largest suitable forward facing fixture (F1/F2/F2X/F3) | | | — | — | — | F3 | — | F3 |
| Group II and III for ECE R44 (ISOFIX) | | | — | — | — | Applicable | — | Applicable |
| Recommend child restraint system | Belted | Childseat SUBARU Baby Safe Plus | Not applicable | Not applicable | Applicable | Applicable | Applicable | Applicable |
| | | Childseat SUBARU Duo Plus | Applicable | Applicable | Applicable | Applicable | Applicable | Applicable |
| | | Childseat SUBARU Kidfix XP | Applicable | Applicable | Applicable | Applicable | Applicable | Applicable |
| | ISOFIX | Childseat SUBARU Duo Plus | — | — | — | Applicable | — | Applicable |
| | | Childseat SUBARU Kidfix XP | — | — | — | Applicable | — | Applicable |

*1: Child restraint system with a support leg cannot be used on the rear center seat position due to vehicle floor shape.
—: Seats that are not equipped with the lower anchorages for child restraint systems.

– CONTINUED –

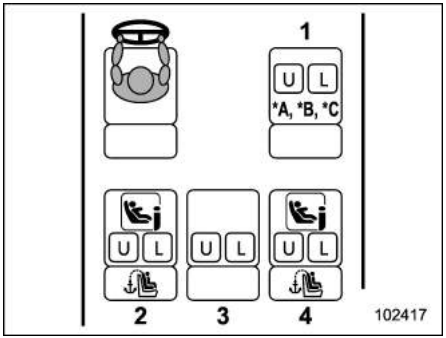


**Left-hand drive models**

*A: The seat position is rear most.
*B: The Seat cushion height is upper most (models with seat cushion height adjustment).
*C: The seatback is upright.

1) Front passenger
2) 2nd row left
3) 2nd row center
4) 2nd row right

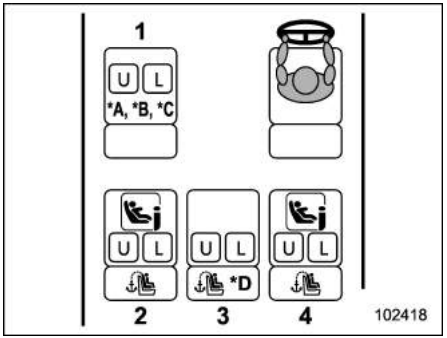


**Right-hand drive models**

*A: The seat position is rear most.
*B: The Seat cushion height is upper most (models with seat cushion height adjustment).
*C: The seatback is upright.
*D: Australia models

1) Front passenger
2) 2nd row left
3) 2nd row center
4) 2nd row right

| Mark | Description |
|---|---|
| | Not suitable for child restraint system |
| U | Suitable for universal category child restraint system. |
| L | Child seats permitted to install SUBARU XV (refer to applicable vehicle models list attached the child seat products) |
| | Suitable for i-Size or ISOFIX child restraint systems. |
| | Suitable for ISOFIX child restraint systems. |
| | Top tether anchorages are equipped. |

**Recommend Child Restraint System suitability for mass group**

| Mass Group | | Child Restraint System |
|---|---|---|
| 0 | up to 10 kg | Childseat SUBARU Baby Safe Plus |
| 0+ | up to 13 kg | |
| I | 9 to 18 kg | Childseat SUBARU Duo Plus |
| II | 15 to 25 kg | Childseat SUBARU Kidfix XP |
| III | 22 to 36 kg | |

**Recommend Child Restraint System suitability for mass group (with ISOFIX rigid anchors)**

| Mass Group | | Size class | Fixture | Child Restraint System |
|---|---|---|---|---|
| carrycot | | F | ISO/L1 | NA |
| | | G | ISO/L2 | NA |
| 0 | up to 10 kg | E | ISO/R1 | NA |
| 0+ | up to 13 kg | E | ISO/R1 | |
| | | D | ISO/R2 | |
| | | C | ISO/R3 | |
| I | 9 to 18 kg | D | ISO/R2 | |
| | | C | ISO/R3 | |
| | | B | ISO/F2 | NA |
| | | B1 | ISO/F2X | Childseat SUBARU Duo Plus |
| | | A | ISO/F3 | NA |
| II | 15 to 25 kg | | | Childseat SUBARU Kidfix XP |
| III | 22 to 36 kg | | | |

– CONTINUED –

## ■ Only for the models with the front passenger's frontal airbag ON/OFF indicator - When installing child restraint systems to the front passenger's seat

**WARNING**

- Never install a child restraint system when the front passenger's frontal airbag ON indicator is illuminated. Otherwise, there is an increased risk of injury to the child when the airbags are deployed, even when a child restraint system is used.
- When you install a child restraint system, follow the manufacturer's instructions supplied with it. After installing the child restraint system, check to ensure that it is held securely in position. If it is not held tight and secure, the danger in the event of an accident may be increased.
- Do not place the removed head restraint in the passenger compartment to prevent it from being thrown around in a sudden stop or a sharp turn.
- When the SRS airbag system warning indicator and the front passenger's frontal airbag OFF indicator are illuminated, the occupant detection system may be malfunctioning. In such case, install the child restraint system to the rear seat.
- When installing a rear facing child restraint system to the front passenger's seat, check that the front passenger's frontal airbag OFF indicator is illuminated while the child is seated in the child restraint system.
- When the front passenger's frontal airbag ON indicator illuminates during driving, park the vehicle at the nearest safe place and install the child restraint system to the rear seat.
- After installing the child restraint system securely to the front passenger's seat, check the front passenger's frontal airbag ON/OFF indicator status.

**CAUTION**

For safety reasons, always install a child restraint system to the rear seat. When it is unavoidable, the front passenger's seat can be used depending on the front passenger's frontal airbag ON/OFF indicator's status. For details, refer to "When installing the child restraint system to the front passenger's seat" ☞1-35.

**NOTE**

The instructions that are stated on the warning label for the AIRBAG will not be applied when all required conditions shown in the Owner's Manual are met.

### ▼ When installing the child restraint system to the front passenger's seat

When you install a child restraint system to the front passenger's seat, perform the following procedure.

1. Adjust the front passenger's seat as follows.

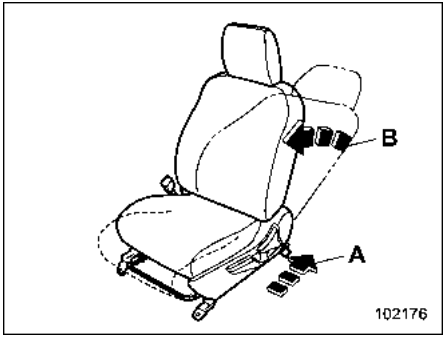


A) Seat position: Rear most
B) Seatback: Upright

2. Install the child restraint system to the front passenger's seat. Refer to "Installing child restraint systems with seatbelt" ☞1-37.
3. Place and secure the child (or infant) in the child restraint system.
4. Check that the front passenger's frontal airbag ON/OFF indicator status meets the requirements of your child restraint system.

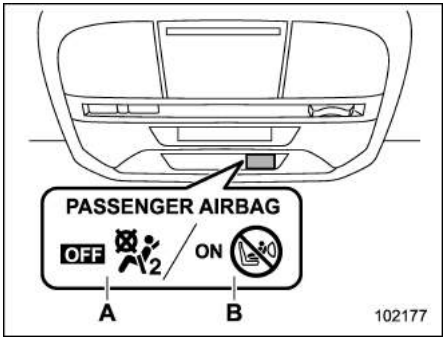


A) Front passenger's frontal airbag OFF indicator
B) Front passenger's frontal airbag ON indicator

- **Indicator status and applicable child restraint system**

| | OFF is illuminating | ON is illuminating |
|---|---|---|
| Forward Facing | OK | OK |
| Rearward Facing | OK | NA |

**When front passenger's frontal airbag OFF indicator is illuminated:**

Both forward and rearward facing child restraint systems can be installed.

**When front passenger's frontal airbag ON indicator is illuminated:**

Only forward facing child restraint systems can be installed. Rearward facing child restraint systems cannot be installed. Further details, refer to "SRS airbag" ☞1-60.

## NOTE

**Depending on the type and/or shape of the child restraint system, and the child's weight, the front passenger's frontal airbag ON indicator status may not meet the requirements of your child restraint system. In this case, install the child restraint system to a rear seat. For details about the front passenger's frontal airbag ON indicator, refer to "Occupant detection system" ☞1-60.**

5. Check that the child restraint system does not contact the head restraint. If the child restraint system does make contact with the head restraint, raise the head restraint to the extended position. If the child restraint system still makes contact, remove the head restraint. For details, refer to "Head restraints" ☞1-8.

– CONTINUED –

▼ **Installation procedure**

For the installation procedure, refer to "Installing child restraint systems with seatbelt" ☞1-37.

## ■ Only for the models without the front passenger's frontal airbag ON/OFF indicator - When installing child restraint systems to the front passenger's seat

**⚠ WARNING**

- **Never install a child restraint system. Otherwise, there is an increased risk of injury to the child when the airbags are deployed, even when a child restraint system is used.**
- **When you install a child restraint system, follow the manufacturer's instructions supplied with it. After installing the child restraint system, check to ensure that it is held securely in position. If it is not held tight and secure, the danger in the event of an accident may be increased.**
- **Do not place the removed head restraint in the passenger compartment to prevent it from being thrown around in a sudden stop or a sharp turn.**
- **When the SRS airbag system warning indicator illuminates, install the child restraint system to the rear seat.**

**⚠ CAUTION**

**For safety reasons, always install a child restraint system to the rear seat. When it is unavoidable, only forward facing child restraint system should be installed in the front passenger's seat. For details, refer to "When installing the child restraint system to the front passenger's seat" ☞1-36.**

▼ **When installing the child restraint system to the front passenger's seat**

When you install a child restraint system to the front passenger's seat, perform the following procedure.

1. Adjust the front passenger's seat as follows.

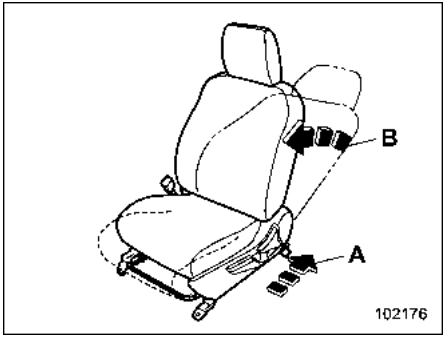


A) Seat position: Rear most
B) Seatback: Upright

2. Install the child restraint system to the front passenger's seat. Refer to "Installing child restraint systems with seatbelt" ☞1-37.
3. Place and secure the child (or infant) in the child restraint system.
4. Check that the child restraint system does not contact the head restraint. If the child restraint system does make contact

with the head restraint, raise the head restraint to the extended position. If the child restraint system still makes contact, remove the head restraint. For details, refer to “Head restraints” ☞1-8.

### ▼ Installation procedure

For the installation procedure, refer to “Installing child restraint systems with seatbelt” ☞1-37.

## ■ Installing child restraint systems with seatbelt

### ▼ Preparation for installing child restraint system

First check if the Automatic Locking Retractor (ALR) is equipped for the seatbelts of the vehicle according to the following procedure.

1. Draw out the seatbelt completely.
2. Retract the seatbelt even slightly and try to draw out the seatbelt again.
3. If the seatbelt is locked in that position and cannot be extended, it indicates that an ALR is equipped for the seatbelt.

When the seatbelt is retracted fully, the ALR mode is canceled and the Emergency Locking Retractor (ELR) mode is restored.

## NOTE

- **For details about the ELR, refer to “Emergency Locking Retractor (ELR)” ☞1-14.**
- **For details about the ALR, refer to “Automatic Locking Retractor/Emergency Locking Retractor (ALR/ELR) (Australia models)” ☞1-14.**

### ▼ Installing a rearward facing child restraint

**⚠ WARNING**

**NEVER INSTALL A CHILD SEAT IN THE FRONT SEAT. DOING SO RISKS SERIOUS INJURY OR DEATH TO THE CHILD BY PLACING THE CHILD’S HEAD TOO CLOSE TO THE SRS AIRBAG.**

## NOTE

- **For models with ALR:**
**If using ALR mode is recommended by the manufacturer’s instructions supplied with the child restraint system, use ALR mode.**

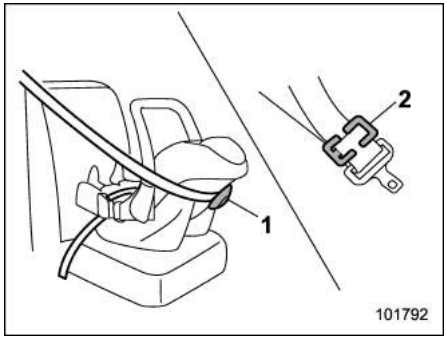


1) Lock-off device
2) Locking clip

- **If using the lock-off device or the locking clip is recommended by the manufacturer’s instructions supplied with the child restraint system, use the lock-off device or the locking clip to secure the child restraint system.**

Through the following steps, the child restraint system is fastened with a seatbelt that is set to ELR mode.

– CONTINUED –

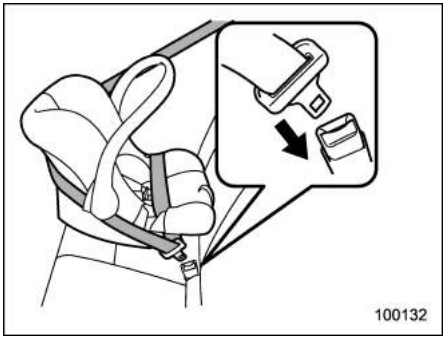


1. Place the child restraint system in the rear seating position.
2. Run the lap and shoulder belt through or around the child restraint system following the instructions provided by its manufacturer.
3. Insert the tongue plate into the buckle until you hear a click.

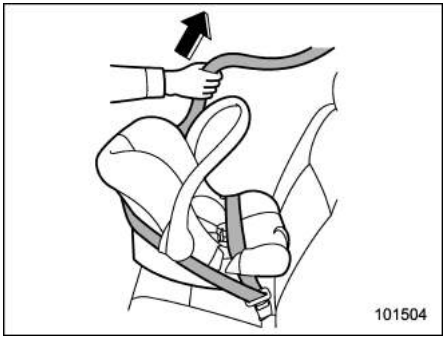


4. Take up the slack in the lap belt.

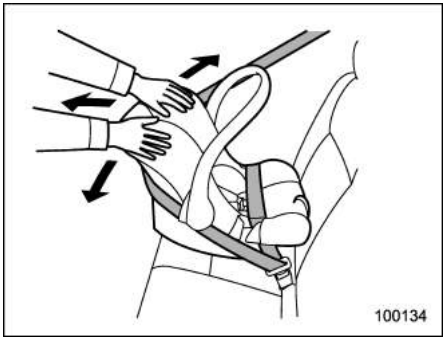


5. Push and pull the child restraint system forward and from side to side to check if it is firmly secured.
6. To remove the child restraint system, press the release button on the seatbelt buckle.

### ▼ Installing forward facing child restraint

If the ALR is not equipped for the seatbelt, refer to “Models without ALR” ☞1-38.

If the ALR is equipped for the seatbelt, refer to “Models with ALR” ☞1-40.

#### ▽ Models without ALR

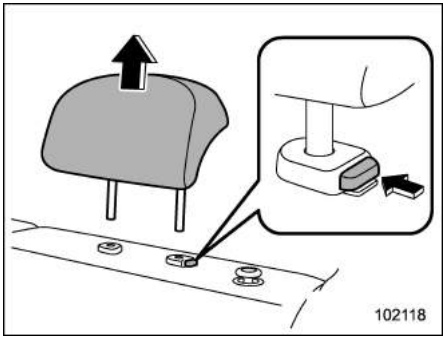


1. Adjust the head restraint as follows.

(Except for center seat)

(1) Remove the head restraint of the rear seating position where the child restraint system is to be installed.

(2) Store the removed head restraint in the cargo area.

**CAUTION**

**Do not place the head restraint that has been removed in the passenger compartment to prevent it from being thrown around in the passenger compartment in a sudden stop or a sharp turn.**

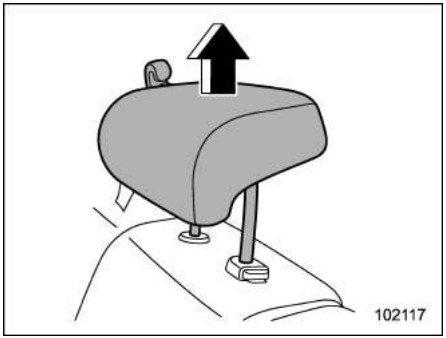


**(For center seat)**

Raise the head restraint to the extended position. Do not remove the head restraint.

2. Place the child restraint system on the seat.

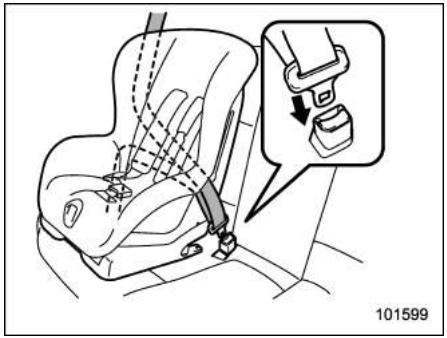


3. Run the lap and shoulder belt through or around the child restraint system following the instructions provided by its manufacturer.

4. Insert the tongue plate into the buckle until you hear a click.

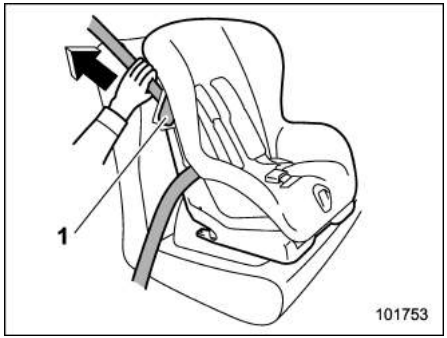


1) Lock-off lever

5. Release the child restraint system lock-off lever and pass the shoulder belt through the lock-off lever.

6. Take up the slack in the lap belt. At this time, to secure the child restraint system more firmly, apply your weight to push it down into the seat cushion as you tighten the seatbelt.

– CONTINUED –

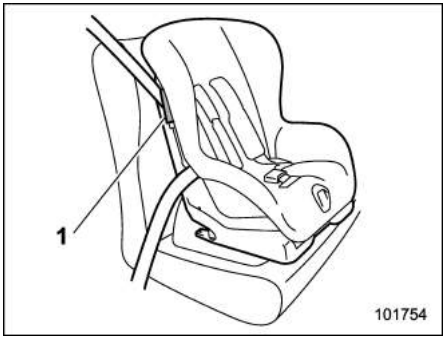


1) Lock-off lever

7. Lock the child restraint system lock-off lever to fix the shoulder belt.

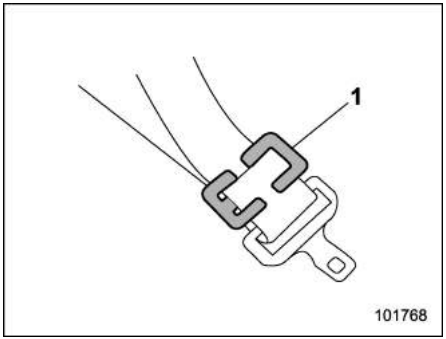


1) Locking clip

8. If your child restraint system is not equipped with a lock-off (a seatbelt locking feature), secure the child restraint system using a locking clip.

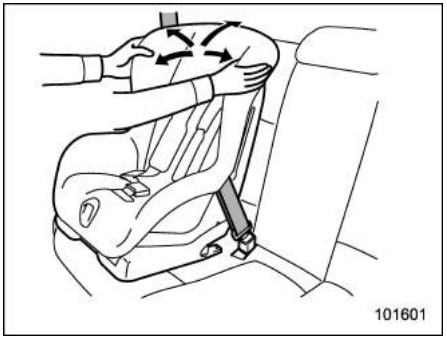


9. Before having a child sit in the child restraint system, try to move it back and forth and right and left to check if it is firmly secured. Sometimes a child restraint can be more firmly secured by pushing it down into the seat cushion and then tightening the seatbelt.

▽ **Models with ALR**

## NOTE

**If using ALR mode is not recommended by the manufacturer's instructions supplied with the child restraint system, use the lock-off lever or the locking clip instead of using ALR mode. In this case, refer to the previous section "Models without ALR" ☞1-38.**

Through the following steps, the child restraint system is fastened by changing the seatbelt from ELR mode to ALR mode.

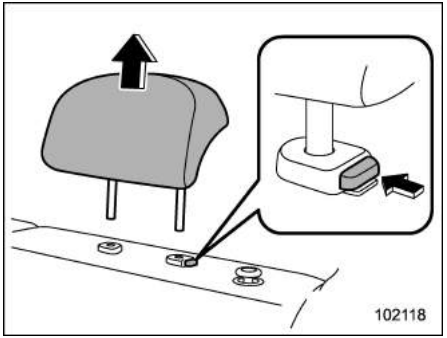


1. Adjust the head restraint as follows.

(Except for center seat)

(1) Remove the head restraint of the rear seating position where the child restraint system is to be installed.

(2) Store the removed head restraint in the cargo area.

**CAUTION**

**Do not place the head restraint that has been removed in the passenger compartment to prevent it from being thrown around in the passenger compartment in a sudden stop or a sharp turn.**

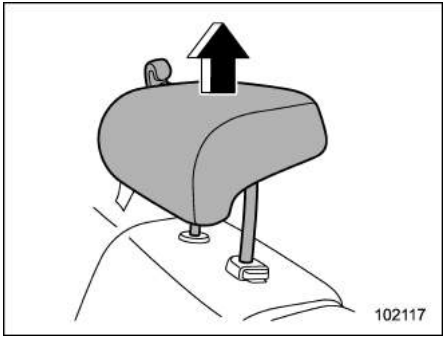


**(For center seat)**

Raise the head restraint to the extended position. Do not remove the head restraint.

2. Place the child restraint system on the seat.

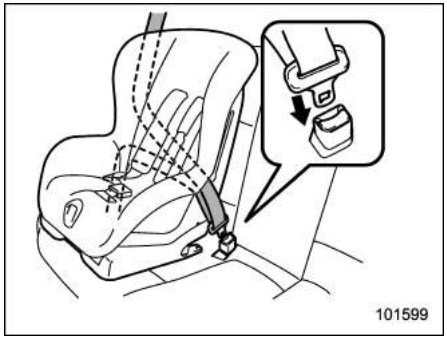


3. Run the lap and shoulder belt through or around the child restraint system following the instructions provided by its manufacturer.

4. Insert the tongue plate into the buckle until you hear a click.

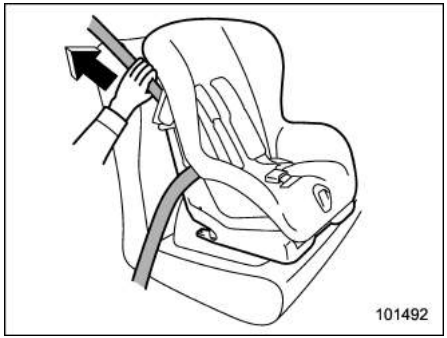


5. Take up the slack in the lap belt.

6. Pull out the seatbelt fully from the retractor to change the retractor over from the Emergency Locking Retractor (ELR) to the Automatic Locking Retractor (ALR) function. Then, allow the belt to rewind into the retractor. As the belt is rewinding, clicks will be heard which indicate the retractor functions as ALR.

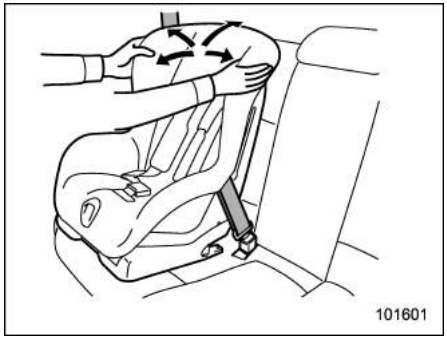


7. Before having a child sit in the child restraint system, try to move it back and forth and right and left to check that it is firmly secured. Sometimes a child restraint can be more firmly secured by pushing it down into the seat cushion and then tightening the seatbelt.

8. Pull at the shoulder portion of the belt to confirm that it cannot be pulled out (ALR properly functioning).

– CONTINUED –

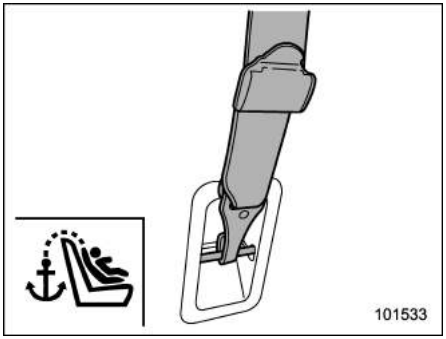


9. If the child restraint system requires a top tether, latch the hook onto the top tether anchorage and tighten the top tether. For additional instructions, refer to “Top tether anchorages” ☞1-47.

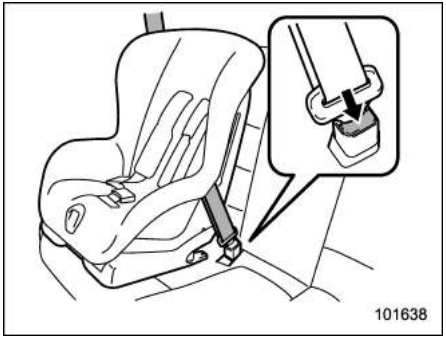


10. To remove the child restraint system, press the release button on the seatbelt buckle and allow the belt to retract completely. The belt will return to the ELR mode.

## NOTE

**When the child restraint system is no longer in use, remove it and restore the ELR function of the retractor. That function is restored by allowing the seatbelt to retract fully.**

## ■ Installing a booster seat

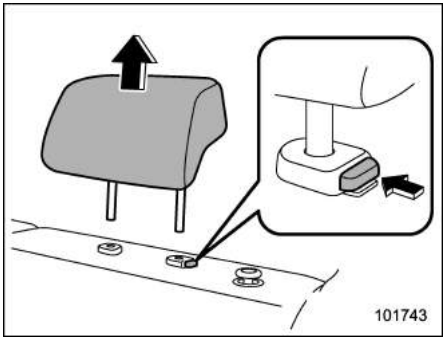


1. Adjust the head restraint as follows.

(Except for center seat)

(1) Remove the head restraint of the rear seating position where the child restraint system is to be installed.

(2) Store the removed head restraint in the cargo area.

**⚠ CAUTION**

**Do not place the head restraint that has been removed in the passenger compartment to prevent it from being thrown around in the passenger compartment in a sudden stop or a sharp turn.**

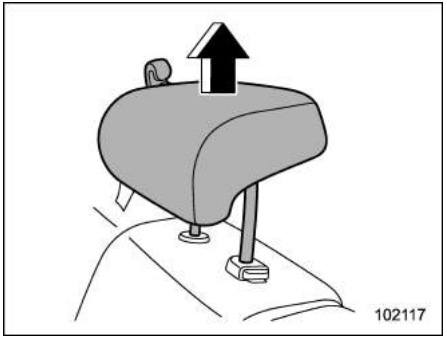


**(For center seat)**

Raise the head restraint to the extended position. Do not remove the head restraint.

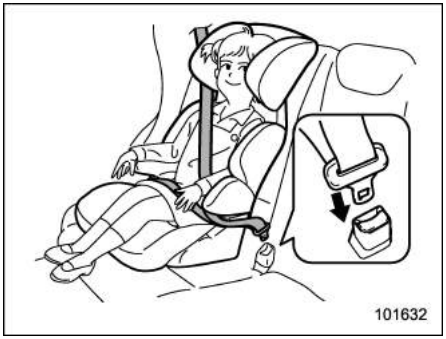


2. Place the booster seat in the rear seating position and sit the child on it. The child should sit well back on the booster seat.

3. Run the lap and shoulder belt through or around the booster seat and the child following the instructions provided by its manufacturer.

4. Insert the tongue plate into the buckle until you hear a click. Take care not to twist the seatbelt.

Make sure the shoulder belt is positioned across the center of child's shoulder and that the lap belt is positioned as low as possible on the child's hips.

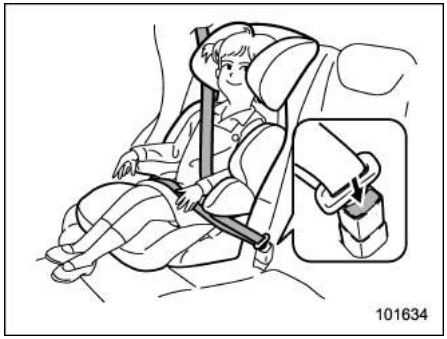


5. To remove the booster seat, press the release button on the seatbelt buckle and allow the belt to retract.

**WARNING**

- **Never use a belt that is twisted or reversed. In an accident, this can increase the risk or severity of injury to the child.**
- **Never place the shoulder belt under the child's arm or behind the child's back. If an accident occurs, this can increase the risk or severity of injury to the child.**
- **The seatbelt should fit snugly in order to provide full restraint. Loose fitting belts are not as effective in preventing or reducing injury.**
- **Place the lap belt as low as possible on the child's hips. High-positioned lap belt will increase the risk of sliding under the lap belt and of the lap belt sliding up over the abdomen, and both can result in serious internal injury or death.**
- **Make sure the shoulder belt is positioned across the center of child's shoulder. Placing the shoulder belt over the neck may result in neck injury during sudden braking or in a collision.**

– CONTINUED –

## ■ Installation of child restraint systems using ISOFIX anchor bars

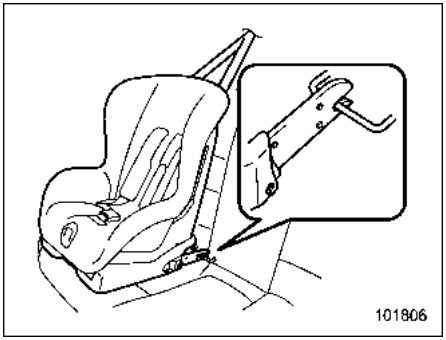


Your vehicle is equipped with ISOFIX anchor bars that allow an approved ISOFIX child restraint system to be installed on the rear seat without use of a seatbelt.

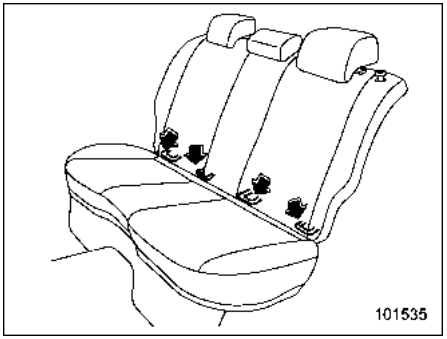


The ISOFIX anchor bars allow you to install a child restraint system only on the rear seat window-side seating positions. For each window-side seating position, two anchor bars are provided.

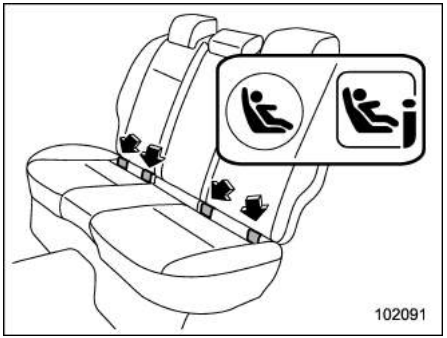


You will find the marks "" or "" in the positions of the seat cushions that are indicated by the arrows. These marks indicate the positions of the ISOFIX anchor bars.

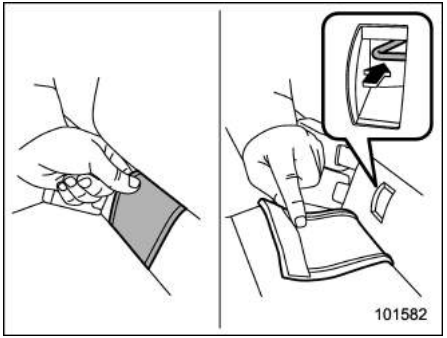


**Type A**

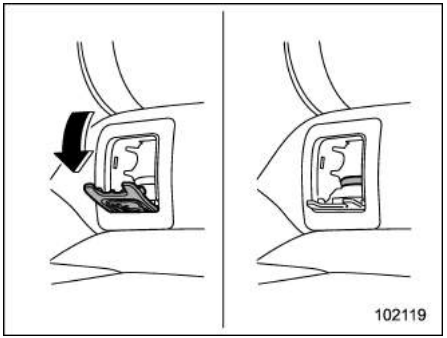


**Type B**

1. Open the covers.

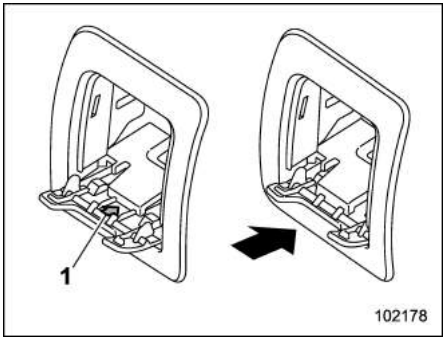


1) Arrow

For type B models:

Push the cover down all the way so that the arrow on the back side of the cover is hidden. If it is not pushed down all the way, the following may occur.

- Noise is produced during driving
- Cover damage when a child restraint system is installed
- Installation of child restraint system hindered

**CAUTION**

- **Ensure that the cover is completely closed when a child restraint system is not in use.**
- **If the cover is not closed completely, there is a danger of personal injury to the vehicle occupants and of damage to the cover.**

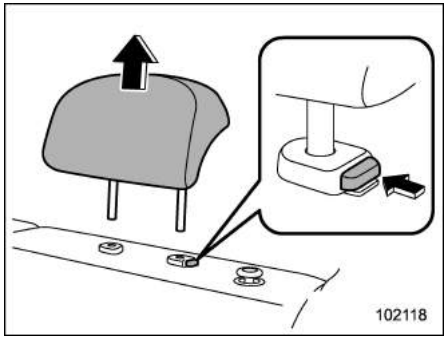


2. Remove the head restraint of the rear seating position where the child restraint system is to be installed.

3. Store the removed head restraint in the cargo area.

**CAUTION**

**Do not place the head restraint that has been removed in the passenger compartment to prevent it from being thrown around in the passenger compartment in a sudden stop or a sharp turn.**

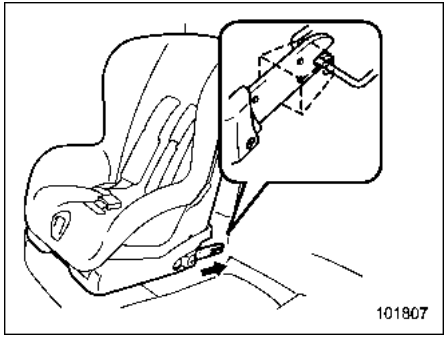


4. While following the instructions supplied by the child restraint system manufacturer, connect the connectors of the child restraint system to the anchor bars. When the connectors are fastened, make sure that the adjacent seatbelts are not caught.

– CONTINUED –

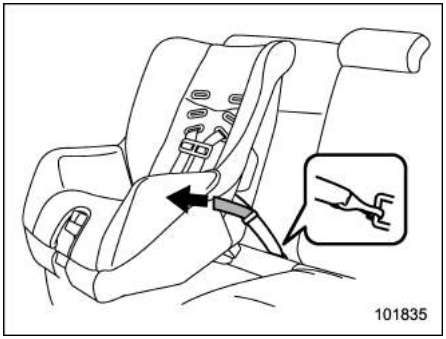


5. [If your child restraint system is of a flexible attachment type (which uses tether belts to connect the child restraint system properly to the lower anchorages)]

While pushing the child restraint into the seat cushion, pull both left and right lower tether belts up to secure the child restraint system firmly by taking up the slack in the belt.

6. Latch the top tether hook onto the tether anchorage that is behind the rear seat and tighten the top tether firmly.

For additional instructions, refer to “Top tether anchorages” ☞1-47.

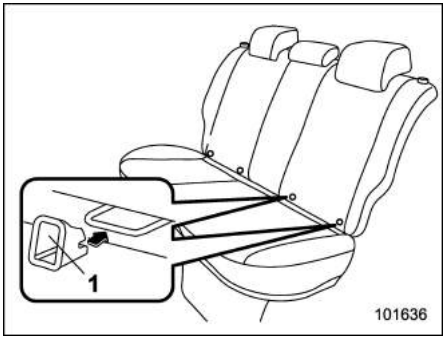


1) Inserting aid

## NOTE

**If your child restraint system is provided with inserting aids, clip them to the two ISOFIX anchor bars (or put them between seatback and seat cushion at the two ISOFIX fastening points) before connecting the child restraint system.**

**Position the two connectors just in front of the two inserting aids. Then insert the two connectors into the inserting aids to connect the connectors to the anchor bars.**

**The inserting aids make it easier to fit the child restraint system with ISOFIX and avoid damage to the seat.**

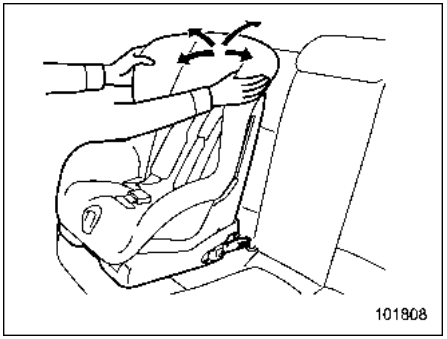


7. Before seating a child in the child restraint system, try to move it back and forth and right and left to verify that it is held securely in position.

8. If the child restraint system requires a top tether, latch the hook onto the top tether anchorage and tighten the top tether. For additional instructions, refer to “Top tether anchorages” ☞1-47.

For further information, refer to the instruction manual supplied by the child restraint system manufacturer.

**CAUTION**

**When you install a child restraint system, follow the manufacturer's instructions supplied with it. After installing the child restraint system, check to ensure that it is held securely in position. If it is not held tight and secure, the danger of your child suffering personal injury in the event of an accident may be increased.**

## NOTE

**Before installing a child restraint system, ask the manufacturer of the system to confirm that it is one approved for your vehicle.**

## ■ Top tether anchorages

Your vehicle is provided with two or three top tether anchorages so that a child restraint system having a top tether can be installed in the rear seat. When installing a child restraint system using top tether, proceed as follows, while observing the instructions by the child restraint system manufacturer.

Since a top tether can provide additional stability by offering another connection between a child restraint system and the vehicle, we recommend that you use a top tether whenever one is required or available.

### ▼ Anchorage location

Anchorages are installed as shown in the following illustrations.

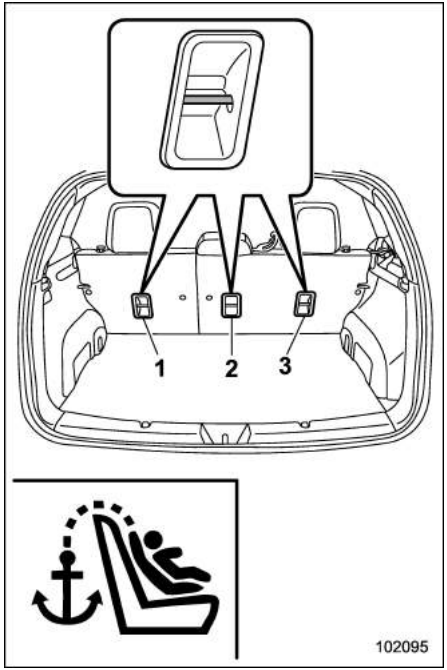


1) For left seat
2) For center seat (if equipped)
3) For right seat

– CONTINUED –

▼ **To hook the top tether**

**⚠ CAUTION**

- **Remove the head restraint when mounting a child restraint system. Otherwise, it might be possible that the top tether cannot be fastened tightly.**
- **Store the head restraint that has been removed in the cargo area. Do not place the head restraint in the passenger compartment to prevent it from being thrown around in the passenger compartment in a sudden stop or a sharp turn.**

1. Remove the head restraint of the rear seating position where the child restraint system is to be installed. For details, refer to “Head restraints” ☞1-8.

**For the center seating position with a top tether**, route the top tether under the head restraint as illustrated below.

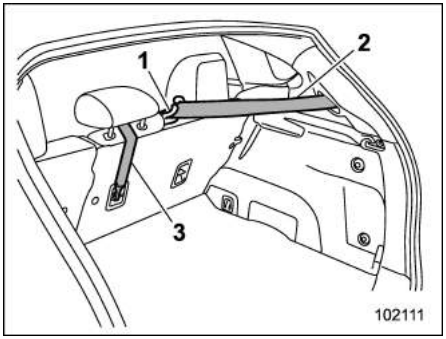


1) Seatbelt guide
2) Seatbelt of the center seating position
3) Top tether

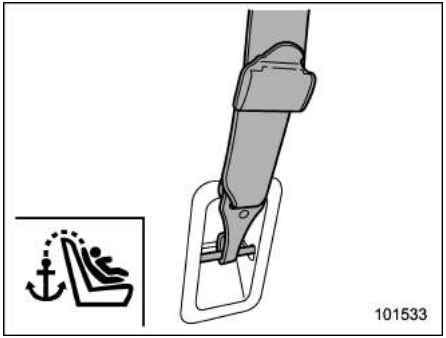


2. Attach the top tether hook to the appropriate upper anchorage.
3. Tighten the top tether securely.

We recommend that you contact your SUBARU dealer if you have any question regarding the installation of a child restraint system.

# *SRS airbag (Supplemental Restraint System airbag)

*SRS: This stands for supplemental restraint system. This name is used because the airbag system supplements the vehicle's seatbelts.

Your vehicle is equipped with a supplemental restraint system in addition to a lap/shoulder/adaptive force limiter (if equipped) for the front seats and rear window-side seating positions (if equipped).

The supplemental restraint system (SRS) consists of seven airbags. The configurations are as follows.

- **Frontal airbags** for driver and front passenger
- **Knee airbag** for driver
- **Side airbags** for driver and front passenger
- **Curtain airbags** for driver, front passenger and window-side rear passengers

**These SRS airbags are designed only as a supplement to the primary protection provided by the seatbelt.**

The system also controls front seatbelt pretensioners. For operation instructions and precautions concerning the seatbelt pretensioner, refer to "Seatbelt pretensioners" ☞1-21.

## ■ General precautions regarding SRS airbag system

**⚠ WARNING**

- **To obtain maximum protection in the event of an accident, the driver and all passengers must always wear seatbelts when in the vehicle. The SRS airbag is designed only to be a supplement to the primary protection provided by the seatbelt. It does not eliminate the need to fasten seatbelts. In combination with the seatbelts, it offers the best combined protection in case of a serious accident.**

  **Not wearing a seatbelt increases the chance of severe injury or death in a crash even when the vehicle has the SRS airbag.**

  **For instructions and precautions concerning the seatbelt system, refer to "Seatbelts" ☞1-12.**
- **The SRS side airbag and SRS curtain airbag are designed only to be a supplement to the primary protection provided by the seatbelt. They do not eliminate the need to fasten seatbelts. It is also important to wear your seatbelt to help avoid injuries that can result when an occupant is not seated in a proper upright position.**

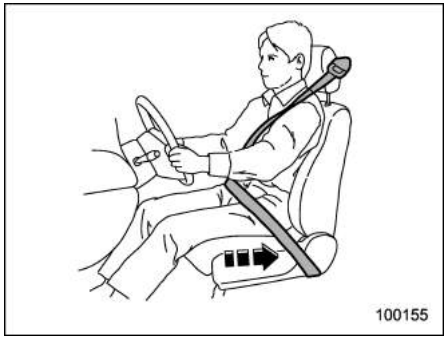


**⚠ WARNING**

**The SRS airbags deploy with considerable speed and force. Occupants who are out of proper position when the SRS airbag deploys could suffer very serious injuries. Because the SRS airbag needs enough space for deployment, the driver should always sit upright and well back in the seat as far from the steering wheel as practical while still**

– CONTINUED –

**maintaining full vehicle control and the front passenger should move the seat as far back as possible and sit upright and well back in the seat.**

**WARNING**

- **Do not sit or lean unnecessarily close to either front door. The SRS side airbags are stored in both front seat seatbacks next to the door, and they provide protection by deploying rapidly (faster than the blink of an eye) in the event of a side impact or frontal collision. However, the force of SRS side airbag deployment may cause injuries if your head or other parts of the body are too close to the SRS side airbag.**
- **Since your vehicle is equipped with SRS curtain airbags, do not sit or lean unnecessarily close to the front or rear door on either side. Also, do not put your head, arms or hands out of the window. The curtain airbags on both sides of the cabin are stored in the roof side (between the front pillar and a point over the rear seat), and they provide protection by deploying rapidly (faster than the blink of an eye) in the event of a side impact. However, the force of its deployment may cause injuries if your head is too close to it.**
- **Do not sit or lean unnecessarily close to the SRS airbag. Because the SRS airbag deploys with considerable speed – faster than the blink of an eye – and force to protect in high speed collisions, the force of an airbag can injure an occupant whose body is too close to SRS airbag.**

  **It is also important to wear your seatbelt to help avoid injuries that can result when the SRS airbag contacts an occupant not in proper position such as one thrown forward during pre-accident braking.**

  **Even when properly positioned, there remains a possibility that an occupant may suffer minor injury such as abrasions and bruises to the face or arms because of the SRS airbag deployment force.**
- **For Russia models, the SRS curtain airbags also deploy in the event of a rollover. The deployment force may cause injuries if your head is too close to it.**

**WARNING**

- Do not rest your arm on either front door or its internal trim. You could be injured in the event of SRS side airbag deployment.
- Do not place any objects over or near the SRS airbag cover or between you and the SRS airbag. If the SRS airbag deploys, those objects could interfere with its proper operation and could be propelled inside the vehicle and cause injury.

**CAUTION**

- When the SRS airbag deploys, some smoke will be released. This smoke could cause breathing problems for people with a history of asthma or other breathing trouble. If you or your passengers have breathing problems after SRS airbag deploys, get fresh air promptly.
- A deploying SRS airbag releases hot gas. Occupants could get burned if they come into direct contact with the hot gas.

**NOTE**

- When you sell your vehicle, we urge you to explain to the buyer that it is equipped with SRS airbags by alerting the buyer to the applicable section in this Owner's Manual.
- If the SRS airbag deploys, fuel supply will be cut off to reduce the risk of fire caused by leaking fuel. For details about restarting of the engine, refer to "If your vehicle is involved in an accident" ☞9-30.

## ■ General precautions regarding SRS airbag system for accessories and any objects

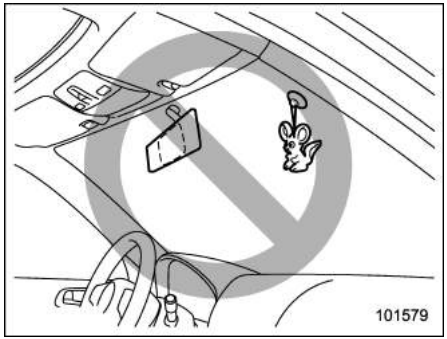


**WARNING**

Do not attach accessories to the windshield, or fit an extra-wide mirror over the inside rear view mirror. If the SRS airbag deploys, these objects could become projectiles that could seriously injure vehicle occupants.

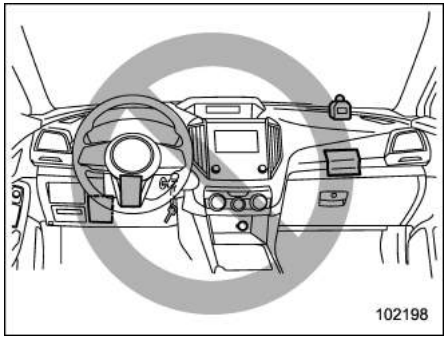


– CONTINUED –

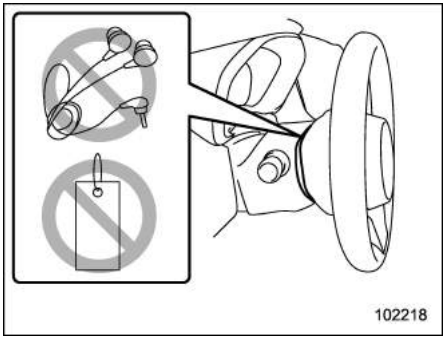


**WARNING**

- **Do not put any objects (including straps or cords) over the steering wheel pad, column cover, or dashboard.**
  - **These objects could be entangled with the steering wheel, preventing the SRS frontal airbag etc. from operating properly.**
  - **If the SRS frontal airbag deploys, these objects could be propelled inside the vehicle, causing injury.**
- **The key must not be attached to heavy, sharp or hard accessories, or another key. If the SRS knee airbag deploys, those objects could interfere with its proper operation and could be propelled inside the vehicle and cause injury.**
- **Do not put any objects under the driver's side of the instrument panel. If the SRS knee airbag deploys, those objects could interfere with its proper operation and could be propelled inside the vehicle and cause injury.**

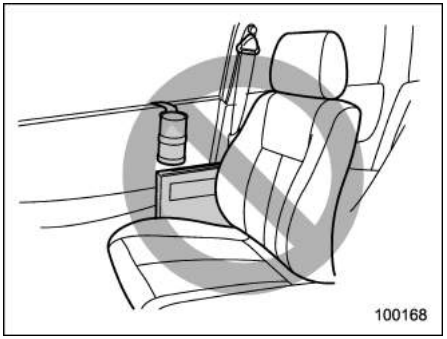


**WARNING**

- **Do not attach accessories to the door trim or near either SRS side airbags and do not place objects near the SRS side airbags. In the event of SRS side airbag deployment, they could be propelled dangerously toward the vehicle's occupants and cause injuries.**
- **Do not attach a hands-free microphone or any other accessory to a front pillar, a center pillar, a rear pillar, the windshield, a side window, an assist grip, or any other cabin surface that would be near a deploying SRS curtain airbag. A hands-free microphone or other accessory in such a location could be propelled through the cabin with great force by the curtain airbag, or it could prevent correct deployment of the curtain airbag. In either case, the result could be serious injuries.**
- **Never hang or place coat hangers or other hard or pointed objects near the side windows. If such items are present when the SRS curtain airbags deploy, they could be thrown through the passenger compartment and cause serious injuries. They could also prevent proper operation of the SRS curtain airbags.**

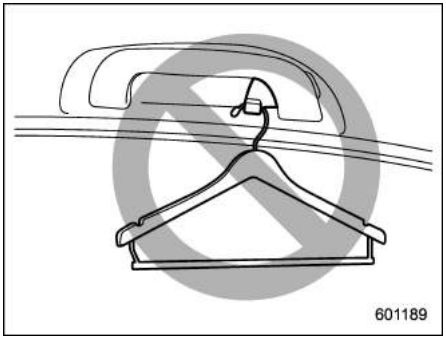


**WARNING**

**Do not hang coat hangers or other hard or pointed objects on the coat hooks. If such items are hanging on the coat hooks during deployment of the SRS curtain airbags, they could cause serious injuries by coming off the coat hooks and being thrown through the cabin or by preventing deployment of the curtain airbags.**

**Before hanging clothing on the coat hooks, make sure there are no sharp objects in the pockets. Hang clothing directly on the coat hooks without using hangers.**

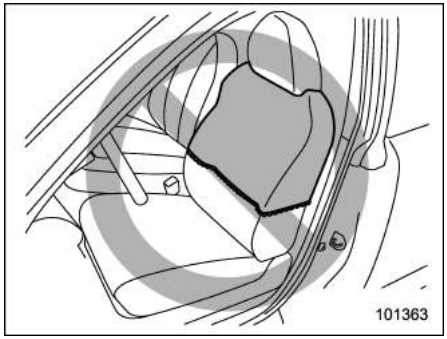


**WARNING**

- **Do not put any kind of clothes or other objects over either front seatback and do not attach labels or stickers to the front seat surface on or near the SRS side airbag. They could prevent proper deployment of the SRS side airbag, reducing protection available to the front seat's occupant.**
- **Do not install a seat cover unless it is a genuine SUBARU seat cover exclusively designed for use with the SRS airbag. Even when using a genuine SUBARU seat cover, the SRS side airbag system may not function normally if the seat cover is not installed correctly.**

## General precautions regarding SRS airbag system for children

**WARNING**

- **Put children in the REAR seat properly restrained at all times in a child restraint system or in a seatbelt, whichever is appropriate for the child's age, height and weight. The SRS airbag deploys with considerable speed and force and can injure or even kill children, especially if they are not**

– CONTINUED –

**restrained or improperly restrained. Because children are lighter and weaker than adults, their risk of being injured from deployment is greater.**

**Secure ALL types of child restraint system (including forward facing child seats) in the REAR seats at all times.**

**According to accident statistics, children are safer when properly restrained in the rear seating positions than in the front seating positions.**

**For instructions and precautions concerning the child restraint system, refer to "Child restraint systems" ☞1-25.**

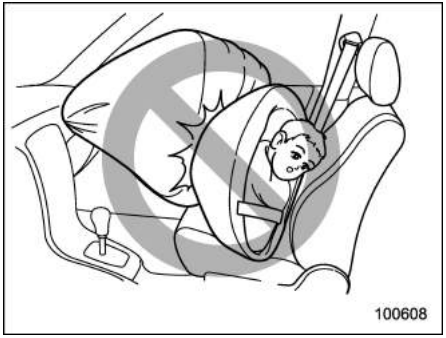


**⚠ WARNING**

**NEVER INSTALL A CHILD SEAT IN THE FRONT SEAT. DOING SO RISKS SERIOUS INJURY OR DEATH TO THE CHILD BY PLACING THE CHILD'S HEAD TOO CLOSE TO THE SRS AIRBAG.**

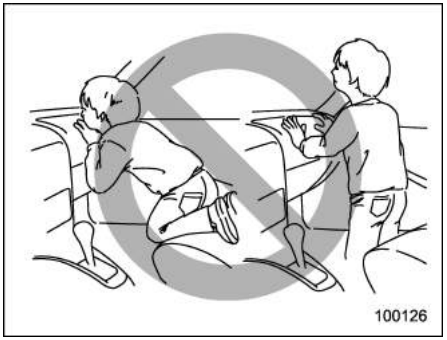


**⚠ WARNING**

**Never allow a child to stand up or kneel on the front passenger's seat. The SRS airbag deploys with considerable force and can injure or even kill the child.**

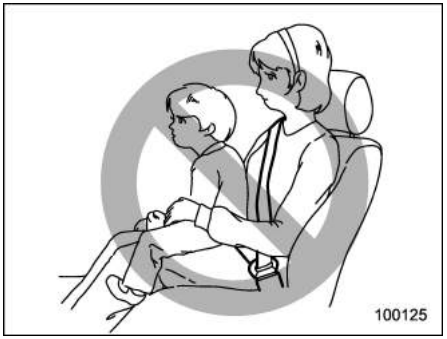


**⚠ WARNING**

**Never hold a child on your lap or in your arms. The SRS airbag deploys with considerable force and can injure or even kill the child.**

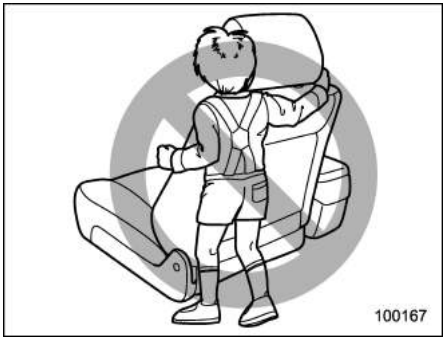


**WARNING**

- **Never allow a child to do the following.**
  - **Kneel on any passenger's seat facing the side window**
  - **Wrap his/her arms around the front seat seatback**
  - **Put his/her head, arms or other parts of the body out of the window**

  **In the event of an accident, the force of SRS side airbag and/or SRS curtain airbag deployment could injure the child seriously because his/her head, arms or other parts of the body are too close to the SRS side airbag and/or SRS curtain airbag.**
- **Since your vehicle is also equipped with a front passenger's SRS frontal airbag, children aged 12 and under or 1.5 m (4 feet 11 inches) tall or less should be placed in the rear seat anyway and should be properly restrained at all times.**

– CONTINUED –

## ■ Components

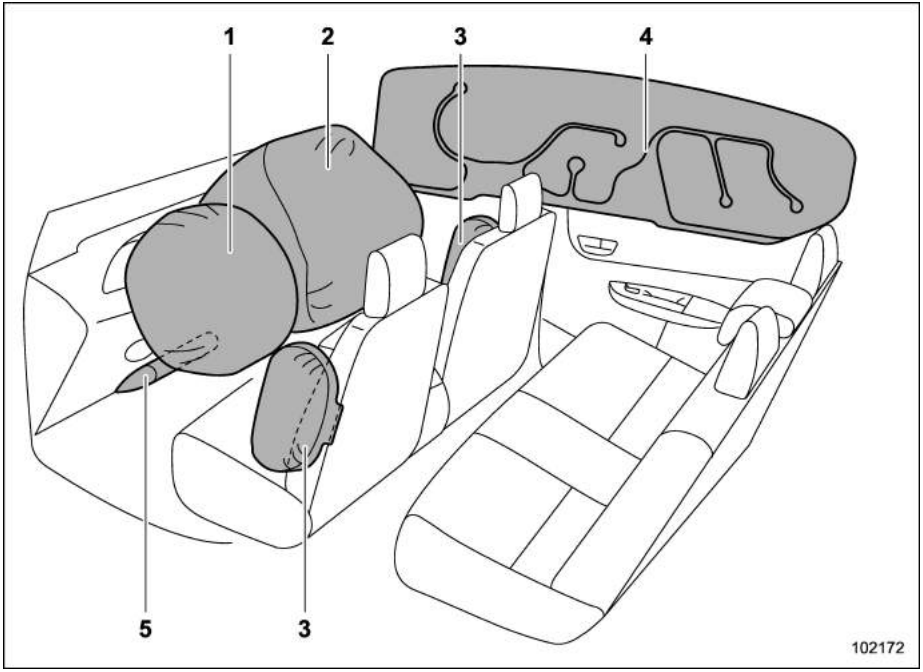


1) Driver's SRS frontal airbag
2) Front passenger's SRS frontal airbag
3) SRS side airbag
4) SRS curtain airbag
5) SRS knee airbag

The SRS airbags are stowed in the following locations.

**Driver's SRS frontal airbag**: in the center portion of the steering wheel
A "SRS AIRBAG" mark is located at the pad of the airbag.

**Front passenger's SRS frontal airbag**: near the top of the dashboard under the "SRS AIRBAG" mark

**SRS side airbag**: in the door side of each front seat seatback which bears the "SRS AIRBAG" label

**SRS curtain airbag**: in the roof side (between the front pillar and a point over the rear seat)
"SRS AIRBAG" marks are located at the top of each center pillar.

**SRS knee airbag**: under the steering column
A "SRS AIRBAG" mark is located at the door of the airbag.

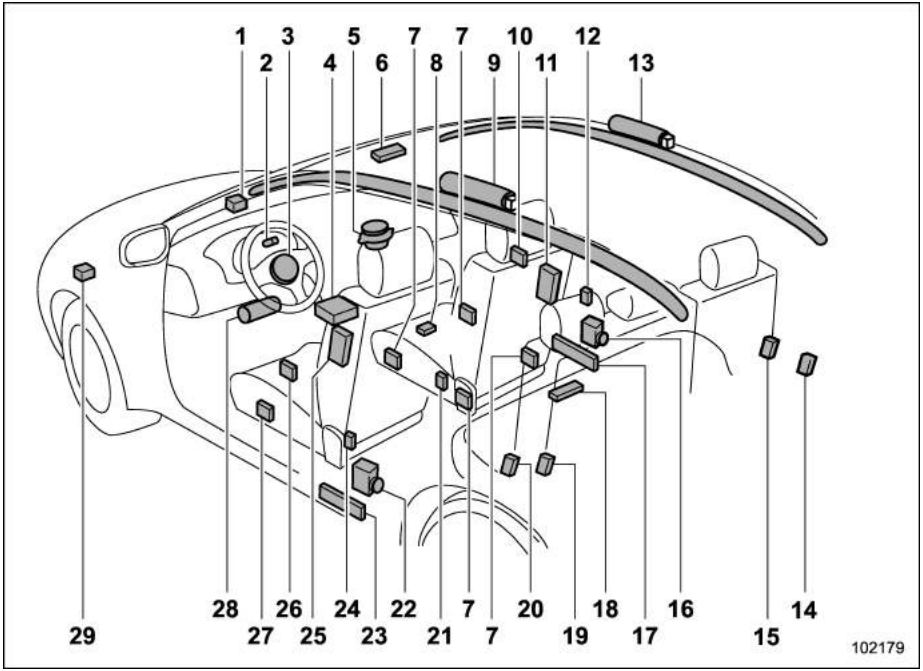


**Left-hand drive models**

1) Front sub sensor (right-hand side)
2) SRS airbag system warning light
3) Frontal airbag module (driver's side)
4) Airbag control module (including impact sensors [all models] and rollover sensor [Russia models])
5) Frontal airbag module (front passenger's side)
6) Front passenger's frontal airbag ON and OFF indicator (if equipped)
7) Front passenger's occupant detection sensors (if equipped)
8) Front passenger's occupant detection control module (if equipped)
9) Curtain airbag module (left-hand side)
10) Front door impact sensor (front passenger's side)
11) Side airbag module (front passenger's side)
12) Side airbag sensor (center pillar right-hand side)
13) Curtain airbag module (right-hand side)
14) Rear seatbelt pretensioner (if equipped)
15) Curtain airbag sensor (rear wheel house right-hand side)
16) Seatbelt pretensioner and adaptive force limiter (if equipped) (front passenger's side)
17) Lap belt pretensioner (front passenger's side)
18) Satellite safing sensor (under the rear center seat)
19) Rear seatbelt pretensioner (if equipped)
20) Curtain airbag sensor (rear wheel house left-hand side)

– CONTINUED –

21) Seatbelt buckle switch (front passenger's side) (if equipped)
22) Seatbelt pretensioner and adaptive force limiter (if equipped) (driver's side)
23) Lap belt pretensioner (driver's side)
24) Side airbag sensor (center pillar left-hand side)
25) Side airbag module (driver's side)
26) Driver's seat position sensor (if equipped)
27) Front door impact sensor (driver's side)
28) Knee airbag module (driver's side)
29) Front sub sensor (left-hand side)

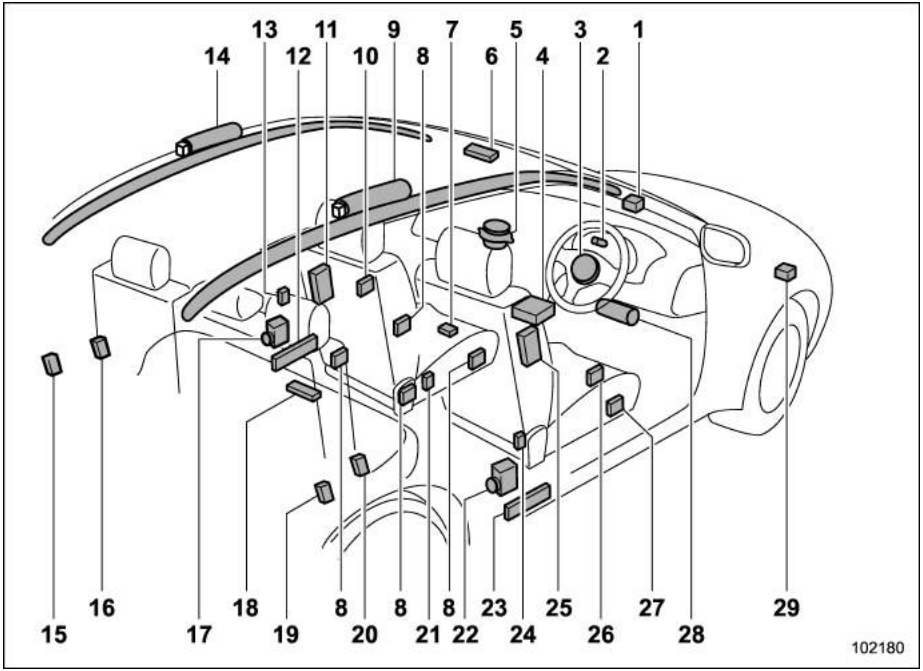


**Right-hand drive models**

1) Front sub sensor (left-hand side)
2) SRS airbag system warning light
3) Frontal airbag module (driver's side)
4) Airbag control module (including impact sensors)
5) Frontal airbag module (front passenger's side)
6) Front passenger's frontal airbag ON and OFF indicator (if equipped)
7) Front passenger's occupant detection control module (if equipped)
8) Front passenger's occupant detection sensors (if equipped)
9) Curtain airbag module (right-hand side)
10) Front door impact sensor (front passenger's side)
11) Side airbag module (front passenger's side)
12) Lap belt pretensioner (front passenger's side)
13) Side airbag sensor (center pillar left-hand side)
14) Curtain airbag module (left-hand side)
15) Rear seatbelt pretensioner (if equipped)
16) Curtain airbag sensor (rear wheel house left-hand side)
17) Seatbelt pretensioner and adaptive force limiter (if equipped) (front passenger's side)
18) Satellite safing sensor (under the rear center seat)
19) Rear seatbelt pretensioner (if equipped)
20) Curtain airbag sensor (rear wheel house right-hand side)
21) Seatbelt buckle switch (front passenger's side) (if equipped)

– CONTINUED –

22) Seatbelt pretensioner and adaptive force limiter (if equipped) (driver's side)
23) Lap belt pretensioner (driver's side)
24) Side airbag sensor (center pillar right-hand side)
25) Side airbag module (driver's side)
26) Driver's seat position sensor (if equipped)
27) Front door impact sensor (driver's side)
28) Knee airbag module (driver's side)
29) Front sub sensor (right-hand side)

## ■ SRS airbag

**⚠ WARNING**

**Warning labels are located on both sides of the front passenger's sun visor. Carefully read the description in "Warning label" ☞1-29.**

For the locations of the SRS airbags, refer to "Components" ☞1-56.

In a moderate to severe frontal collision, the following components deploy.

- SRS frontal airbag for driver
- SRS frontal airbag for front passenger
- SRS knee airbag for driver

These components supplement the seatbelts by reducing the impact to the occupant's head, chest and knees.

In a moderate to severe side impact collision, the SRS side airbag on the impacted side of the vehicle deploys between the occupant and the door panel and supplements the seatbelt by reducing the impact to the occupant's chest and waist. The SRS side airbag operates only for front seat occupants.

In a moderate to severe side impact collision, the SRS curtain airbag on the impacted side of the vehicle deploys between the occupant and the side window and supplements the seatbelt by reducing the impact to the occupant's head.

### ▼ Occupant detection system (if equipped)

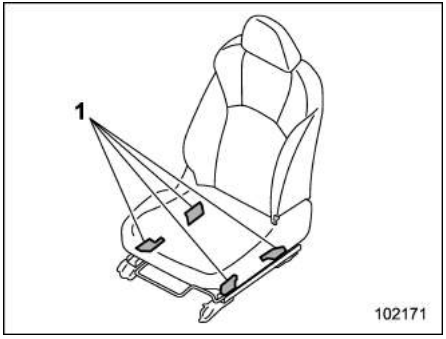


1) Occupant detection sensors

The occupant detection system sensors are installed between the seat and seat rails, and monitors the physique and posture of the front passenger. The occupant detection system determines whether the front passenger's SRS frontal airbag should be deployed or not from the physique and posture of the front passenger.

The occupant detection system may not inflate the front passenger's SRS frontal

airbag even when the driver's SRS frontal airbag deploys. This is normal.

**WARNING**

**Do not kick the front passenger seat or subject it to severe impact. Otherwise, the SRS airbag system warning light may illuminate to indicate a malfunction of the front passenger occupant detection system. In this case, contact your SUBARU dealer immediately.**

**CAUTION**

**Electrical devices, such as cell phones, laptops, portable music players, or electronic games, especially when connected to the accessory power outlet and placed on the front passenger's seat or used by the person sitting in the front passenger's seat, may affect the operation of the occupant detection system. If either of the following situations occurs when using an electronic device in the vehicle, at first try to relocate that device to avoid it creating any interference.**

- **The SRS airbag system warning light illuminates.**
- **The front passenger's frontal airbag ON and OFF indicators operate erratically.**

**If the device continues to cause interference, the use of that device in the vehicle should be discontinued.**

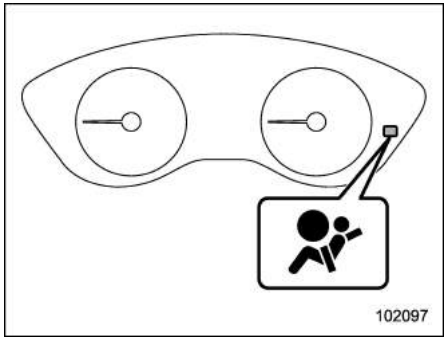


**SRS airbag system warning light**

If the front passenger's seat cushion is wet, this may adversely affect the ability of the occupant detection system. Wipe off liquid from the seat, let the seat dry naturally and then check the SRS airbag system warning light.

: Front passenger's frontal airbag ON indicator

: Front passenger's frontal airbag OFF indicator

If the front passenger's frontal airbag ON and OFF indicators do not work properly even when the front passenger's seat is dry, do not allow anyone to sit on the front passenger's seat and have the occupant detection system checked by your SUBARU dealer.

– CONTINUED –

: Front passenger's frontal airbag ON indicator
: Front passenger's frontal airbag OFF indicator

Also, if luggage or electronic devices are placed on the front passenger's seat, this may adversely affect the ability of the occupant detection system. This may prevent the front passenger's frontal airbag ON and OFF indicators from working properly. Check that the indicators work properly.

When the OFF indicator turns off and the ON indicator illuminates, the front passenger's SRS frontal airbag may deploy during a collision. Remove luggage and electronic devices from the front passenger's seat.

▼ **Front passenger's SRS frontal airbag for models with occupant detection system**

**⚠ CAUTION**

**Observe the following precautions. Failure to do so may prevent the front passenger's SRS frontal airbag from functioning correctly or cause the system to fail.**

- **Do not apply any strong impact to the front passenger's seat such as by kicking.**
- **Do not let rear passengers rest their feet between the front seatback and seat cushion.**
- **Do not spill liquid on the front passenger's seat. If liquid is spilled, wipe it off immediately.**
- **Do not remove or disassemble the front passenger's seat.**
- **Do not install any accessory (such as an audio amplifier) other than a genuine SUBARU accessory or an equivalent under the front passenger's seat.**
- **Do not place anything (shoes, umbrella, etc.) under the front passenger's seat.**
- **Do not place any objects (books, etc.) around the front passenger's seat.**
- **Do not use the front passenger's seat with the head restraint removed.**
- **Do not leave any articles on the front passenger's seat or the seatbelt tongue and buckle engaged when you leave your vehicle.**
- **Do not put sharp object(s) on the seat or pierce the seat upholstery.**
- **Do not place a magnet near the seatbelt buckle and the seatbelt retractor.**
- **For models with a manual seat, do not use front seats with their forward-backward position and seatback not being locked into place securely. If any of them are not locked securely, adjust them again. For adjusting procedure, refer to "Manual seat" ☞1-5.**

If the seatbelt buckle switch and/or front passenger's occupant detection system have failed, the SRS airbag system warning light will illuminate. We recommend that you have the system inspected by

your SUBARU dealer immediately if the SRS airbag system warning light illuminates.

If your vehicle has sustained impact, this may affect the proper function of the front passenger's SRS frontal airbag system. We recommend that you have your vehicle inspected at your SUBARU dealer. Do not use the front passenger's seat while driving the vehicle to your SUBARU dealer or another service center.

## NOTE

**The front passenger's SRS side airbag and SRS curtain airbag are not controlled by the SRS frontal airbag system.**

### ▼ Passenger's frontal airbag ON and OFF indicators (if equipped)

Refer to "Front passenger's frontal airbag ON and OFF indicators" ☞3-16.

### ▼ Conditions in which front passenger's SRS frontal airbag is not activated (models with occupant detection system)

The front passenger's SRS frontal airbag will not be activated when any of the following conditions are met regarding the front passenger's seat:

- The seat is empty.
- The seat is equipped with an appropriate child restraint system and an infant is restrained in it. (See WARNING that follows.)
- The system is being checked after the ignition switch is turned to the "ON" position.
- The front passenger's occupant detection system is malfunctioning.

**⚠ WARNING**

**NEVER INSTALL A CHILD SEAT IN THE FRONT SEAT EVEN IF THE FRONT PASSENGER'S SRS FRONTAL AIRBAG IS DEACTIVATED. Be sure to install it in the REAR seat in a correct manner. Also, it is strongly recommended that any forward facing child seat or booster seat be installed in the REAR seat, and that even children who have outgrown a child restraint system be also seated in the REAR seat. This is because children sitting in the front passenger's seat may be killed or severely injured should the front passenger's SRS frontal airbag deploy. REAR seats are the safest place for children.**

**⚠ CAUTION**

**When the front passenger's seat is occupied by an infant in an appropriate child restraint system, observe the following precautions. Failure to do so may interfere with the proper operation of the occupant detection system, activating the front passenger's SRS frontal airbag even though that seat is occupied by the infant in the child restraint system.**

- **Do not place any article (including electronic devices) on the seat other than the infant in the child restraint system.**
- **Do not place more than one infant in the child restraint system.**

– CONTINUED –

▽ **If the front passenger's frontal airbag ON indicator illuminates and the OFF indicator turns off even when an infant or a small child is in a child restraint system (including booster seat)**

: Front passenger's frontal airbag ON indicator
: Front passenger's frontal airbag OFF indicator

1. Turn the ignition switch to the "LOCK"/ "OFF" position.
2. Remove the child restraint system from the seat.
3. By referring to the child restraint manufacturer's recommendations as well as the child restraint system installation procedures in "Child restraint systems" ☞1-25, correctly install the child restraint system.
4. Turn the ignition switch to the "ON" position and make sure that the front passenger's frontal airbag ON indicator turns off and the OFF indicator illuminates.

If still the ON indicator remains illuminated while the OFF indicator turns off, take the following actions.

- Ensure that no article is placed on the seat other than the child restraint system and the child occupant.
- Ensure that the backward-forward position and seatback of front passenger's seat are locked into place securely by moving the seat back and forth (models with manual seat only).

If the ON indicator still remains illuminated while the OFF indicator turns off after taking relevant corrective actions described above, relocate the child restraint system to the rear seat. We recommend that you immediately contact your SUBARU dealer for an inspection.

## NOTE

**When a child who has outgrown a child restraint system or a small adult is seated in the front passenger's seat, the SRS frontal airbag system may or may not activate the front passenger's SRS frontal airbag depending on the occupant's seating posture. Children should always wear a seatbelt when sitting in the seat irrespective of whether the airbag is deactivated or activated. If the front passenger's SRS frontal airbag is activated (the ON indicator remains illuminated while the OFF indicator turns off), take the following action.**

- **Ensure that no article is placed on the seat other than the occupant.**

**If the ON indicator still remains illuminated while the OFF indicator turns off despite the fact that the actions noted above have been taken, seat the child/ small adult in the rear seat. We recommend that you immediately contact your SUBARU dealer for an inspection. Even if the system has passed the dealer inspection, it is recommended that on subsequent trips the child/small adult always take the rear seat.**

Children who have outgrown a child restraint system should always wear the seatbelt irrespective of whether the airbag is deactivated or activated.

▼ **Conditions in which front passenger's SRS frontal airbag is activated (models with occupant detection system)**

The front passenger's SRS frontal airbag will be activated for deployment upon impact when any of the following conditions are met regarding the front passenger's seat.

- When the seat is occupied by an adult.
- When certain items (e.g. jug of water) are placed on the seat.

**⚠ CAUTION**

**When the front passenger's seat is occupied by an adult, do not place anything (shoes, umbrella, etc.) under the front passenger's seat. Doing so may deactivate the front passenger's SRS frontal airbag despite the fact that the seat is occupied by an adult. This may result in personal injury.**

▽ **If the passenger's frontal airbag OFF indicator illuminates and the ON indicator turns off even when the front passenger's seat is occupied by an adult**

: Front passenger's frontal airbag ON indicator

: Front passenger's frontal airbag OFF indicator

This can be caused by the adult incorrectly sitting in the front passenger's seat.

1. Turn the ignition switch to the "LOCK"/"OFF" position.
2. Ask the front passenger to set the seatback to the upright position, sit up straight in the center of the seat cushion, correctly fasten the seatbelt, position his/her legs out forward, and adjust the seat to the rearmost position.
3. Turn the ignition switch to the "ON" position.

If the OFF indicator remains illuminated while the ON indicator remains off, take the following actions.

1. Turn the ignition switch to the "LOCK"/"OFF" position.
2. Make sure that the front passenger does not use a blanket, seat cushion, seat cover, seat heater or massager, etc.
3. If wearing excessive layers of clothing, the front passenger should remove any unnecessary items before sitting in the front passenger's seat, or should sit in a rear seat.
4. Turn the ignition switch to the "ON" position and wait 6 seconds to allow the system to complete self-checking. Following the system check, both indicators turn off for 2 seconds. Now, the ON indicator should illuminate while the OFF indicator remains off.

If the OFF indicator still remains illuminated while the ON indicator remains off, ask the occupant to move to the rear seat. We recommend that you immediately contact your SUBARU dealer for an inspection.

– CONTINUED –

## ■ System operation

**⚠ CAUTION**

**Do not touch the SRS airbag system components with bare hands right after deployment. Doing so can cause burns because the components can be very hot as a result of deployment.**

The SRS airbags can function only when the ignition switch is in the “ON” position.

When the SRS airbag(s) deploy(s), a sudden, fairly loud inflation noise will be heard and some smoke will be released. These occurrences are a normal result of the deployment. This smoke does not indicate a fire in the vehicle.

### ▼ SRS frontal airbag operation

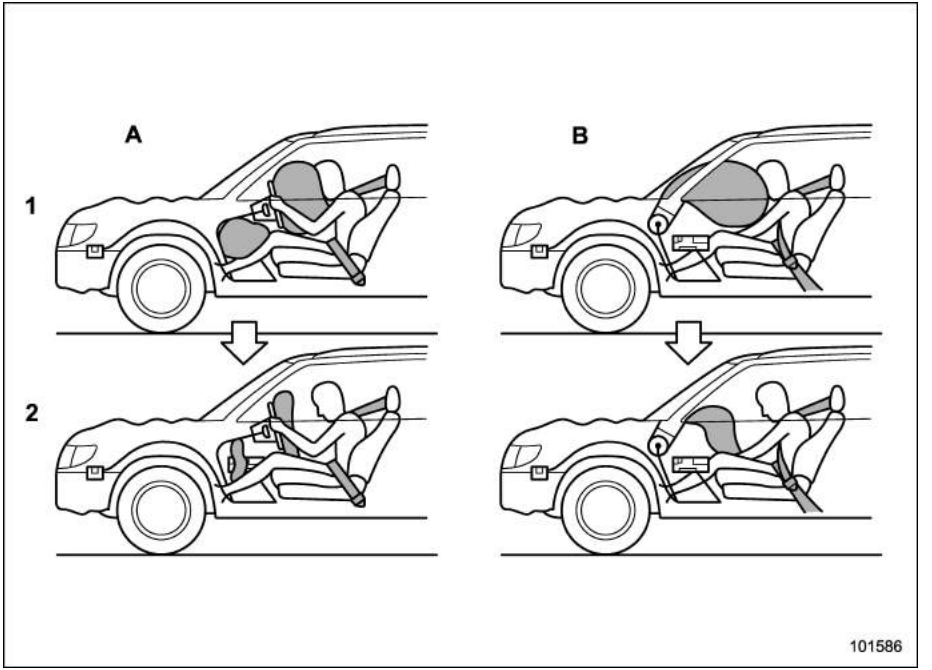


A) Driver’s side
B) Passenger’s side
1) SRS AIRBAGs deploy as soon as a collision occurs.
2) After deployment, SRS AIRBAGs start to deflate immediately so that the driver’s vision is not obstructed.

If the following sensors detect a certain predetermined amount of force during a frontal collision, the control module sends signals to the frontal airbag modules instructing them to inflate the SRS frontal airbags.

- front sub sensors located on both the right and left sides at the front of the vehicle
- the impact sensors in the airbag control module

Then both airbag modules produce gas, which instantly inflates driver's and passenger's SRS frontal airbags. The SRS knee airbag is also inflated in combination with the SRS frontal airbags.

### ▽ After deployment

After deployment, the SRS airbags immediately start to deflate so that the driver's vision is not obstructed and the driver's ability to maintain control of the vehicle is not interfered. The time required from detecting impact to the deflation of the SRS airbag after deployment is shorter than the blink of an eye.

If the vehicle is equipped with the occupant detection system for the front passenger's seat, the SRS system detects whether the front passenger's seat is occupied by a passenger or not. If the seat is not occupied, the system does not inflate the front passenger's SRS airbag.

### ▽ Example of the type of accident

The SRS frontal airbag (and also the SRS knee airbag) are designed as follows.

- to deploy in the event of an accident involving a moderate to severe frontal collision.
- to function on a one-time-only basis.

The SRS frontal airbag (and also the SRS knee airbag) are not designed as follows.

- to deploy in most lesser frontal impacts*1
- to deploy in most side or rear impacts or in most rollover accidents*2

*1: Because the necessary protection can be achieved by the seatbelt alone.

*2: Because deployment of the SRS frontal airbag would not protect the occupant in those situations.

SRS airbag deployment depends on the level of force experienced in the passenger compartment during a collision. That level differs from one type of collision to another, and it may have no bearing on the visible damage done to the vehicle itself.

### ▽ When will the SRS frontal airbag most likely deploy?

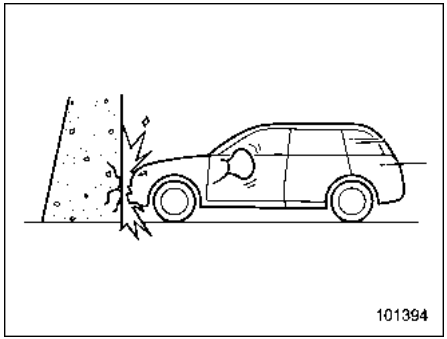


A head-on collision against a thick concrete wall at a vehicle speed of 20 to 30 km/h (12 to 19 mph) or higher activates the SRS frontal airbag. The SRS frontal airbag will also be activated when the vehicle is exposed to a frontal impact similar in fashion and magnitude to the collision described above.

– CONTINUED –

▽ **At what other times might the SRS frontal airbag deploy?**

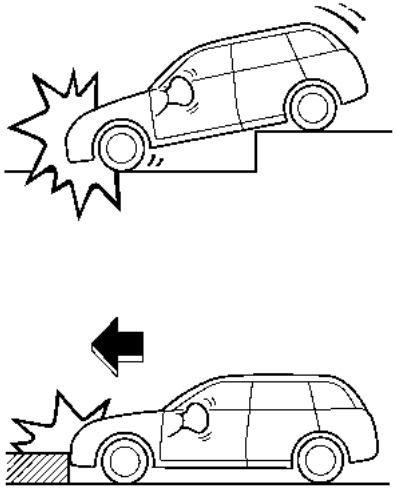


The SRS frontal airbag may be activated when the vehicle sustains a hard impact in the undercarriage area from the road surface (such as when the vehicle plunges into a deep ditch, is severely impacted or knocked hard against an obstacle on the road such as a curb).

▽ **When is the SRS frontal airbag unlikely to deploy?**

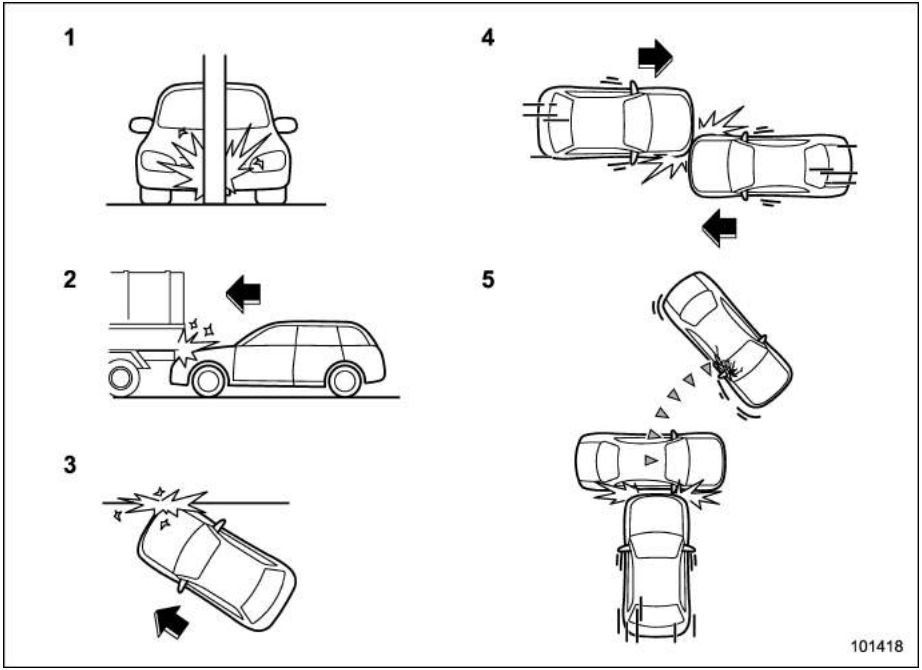


1) The vehicle strikes an object, such as a telephone pole or sign pole.
2) The vehicle slides under the load bed of a truck.
3) The vehicle sustains an oblique offset frontal impact.
4) The vehicle sustains an offset frontal collision.
5) The vehicle strikes an object that can move or deform, such as a parked vehicle.

There are many types of collisions which might not necessarily require SRS frontal airbag deployment. In the event of accidents like those illustrated, the SRS frontal airbag may not deploy depending on the level of accident forces involved.

– CONTINUED –

### ▽ When will the SRS frontal airbag not deploy?

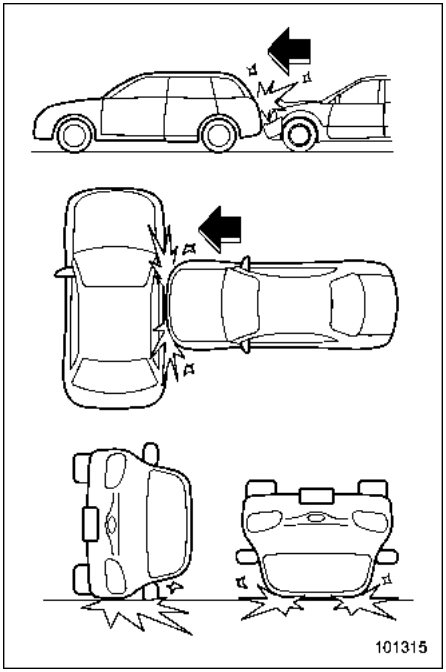


The SRS frontal airbag is not designed to deploy in most cases if the vehicle is struck from the side or from behind, or if it rolls onto its side or roof, or if it is involved in a low-speed frontal collision.

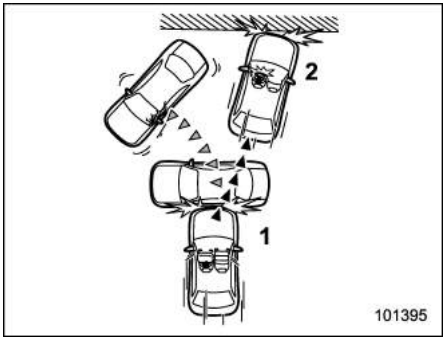


1) First impact
2) Second impact

In an accident where the vehicle is impacted more than once, the SRS frontal airbag deploys only once on the first impact.

Example: In the case of a double collision, first with another vehicle, then against a concrete wall in immediate succession, once the SRS frontal airbag is activated on the first impact, it will not be activated on the second.

### ▼ SRS side airbag and SRS curtain airbag operation

The following airbags deploy independently of each other since each has its own impact sensor.

- Driver's SRS side airbag
- Front passenger's SRS side airbag
- SRS curtain airbag (right-hand side)
- SRS curtain airbag (left-hand side)

Therefore, they may not both deploy in the same accident. Also, the SRS side airbag and SRS curtain airbag deploy independently of the driver's and front passenger's SRS frontal airbags in the steering wheel and instrument panel.

An impact sensor, which senses impact force, is located in each of the following

locations.

- In the left and right front doors
- In the left and right center pillars
- In the left and right rear wheel houses
- Under the rear center seat (satellite safing sensor)

Another impact sensor, which also senses impact force, is located in the airbag control module. The rollover sensor (Russia models) are located inside the airbag control module which is located under the center of the instrument panel.

If one of the center pillar impact sensors, front door impact sensors and the impact sensor that is located in the airbag control module together sense an impact force above a predetermined level in a side collision, the control module causes both the SRS side airbag and SRS curtain airbag on the impacted side to inflate regardless of whether the rear wheel house impact sensor on the same side senses an impact.

If one of the rear wheel house impact sensors and the impact sensor that is located in the airbag control module together sense an impact force above a predetermined level in a side collision, the control module causes only the SRS curtain airbag on the impacted side to inflate.

For Russia models, if the rollover sensor detects a vehicle rollover, the control module inflates the SRS curtain airbags on both sides. At this time, the driver's and front passenger's seatbelt pretensioners also operate simultaneously.

### ▽ After deployment

After deployment, the SRS side airbag immediately starts to deflate. The time required from detection of an impact to deflation of an SRS side airbag after deployment is shorter than the blink of an eye. The SRS curtain airbag remains inflated for a while following deployment then slowly deflates.

The SRS side airbag and SRS curtain airbag deploy even when no one occupies the seat on the side on which an impact is applied.

### ▽ Example of the type of accident

The SRS side airbag and SRS curtain airbag are designed as follows:

- to deploy in the event of an accident involving a moderate to severe side impact collision.
- to function on a one-time-only basis.

The SRS side airbag and SRS curtain airbag are not designed to deploy in the following cases:

- in most lesser side impact
- in most frontal or most rear impacts (because the SRS side airbag and SRS curtain airbag deployment would not protect the occupant in those situations)

For Russia models, the SRS curtain airbags are also designed to deploy when the vehicle is in an extremely inclined state such as during a rollover. They are not designed to deploy in most lesser inclined states.

The SRS side airbag and SRS curtain airbag deployment depend on the level of force experienced in the passenger compartment during a side impact collision. That level differs from one type of collision to another, and it may have no bearing on the visible damage done to the vehicle itself.

– CONTINUED –

### ▽ When will the SRS side airbag and SRS curtain airbag most likely deploy?

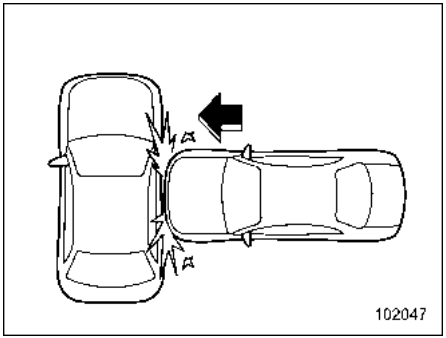


A severe side impact near the front seat activates the SRS side airbag and SRS curtain airbag.

### ▽ When will the SRS curtain airbag most likely deploy? (Russia models)

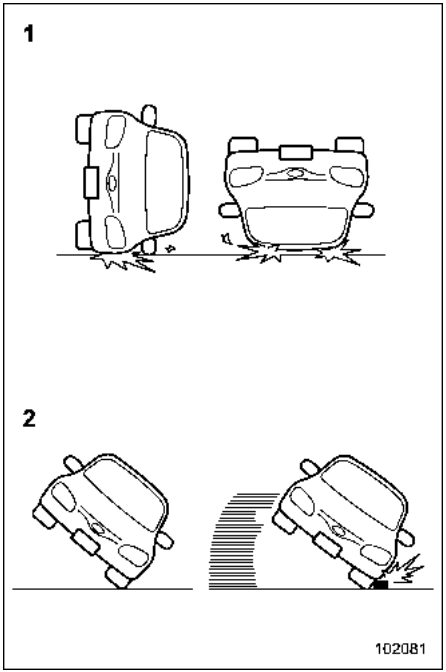


1) The vehicle rolls onto its side or the roof.
2) The angle of vehicle tip-up is marginal or the skidding vehicle's tires hit a curbstone laterally.

▽ **When is the SRS side airbag unlikely to deploy?**

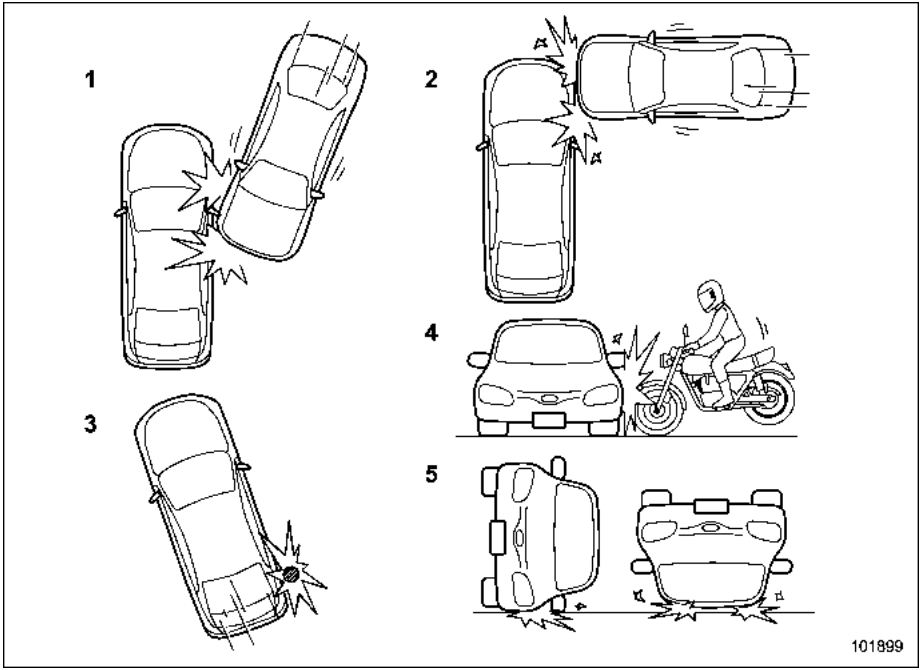


1) The vehicle is involved in an oblique side-on impact.
2) The vehicle is involved in a side-on impact in an area outside the vicinity of the passenger compartment.
3) The vehicle strikes a telephone pole or similar object.
4) The vehicle is involved in a side-on impact from a motorcycle.
5) The vehicle rolls onto its side or roof.

There are many types of collisions which might not necessarily require SRS side airbag deployment. In the event of accidents like those illustrated, the SRS side airbag may not deploy depending on the level of accident forces involved.

– CONTINUED –

### ▽ When is the SRS curtain airbag unlikely to deploy?

**Except Russia models**

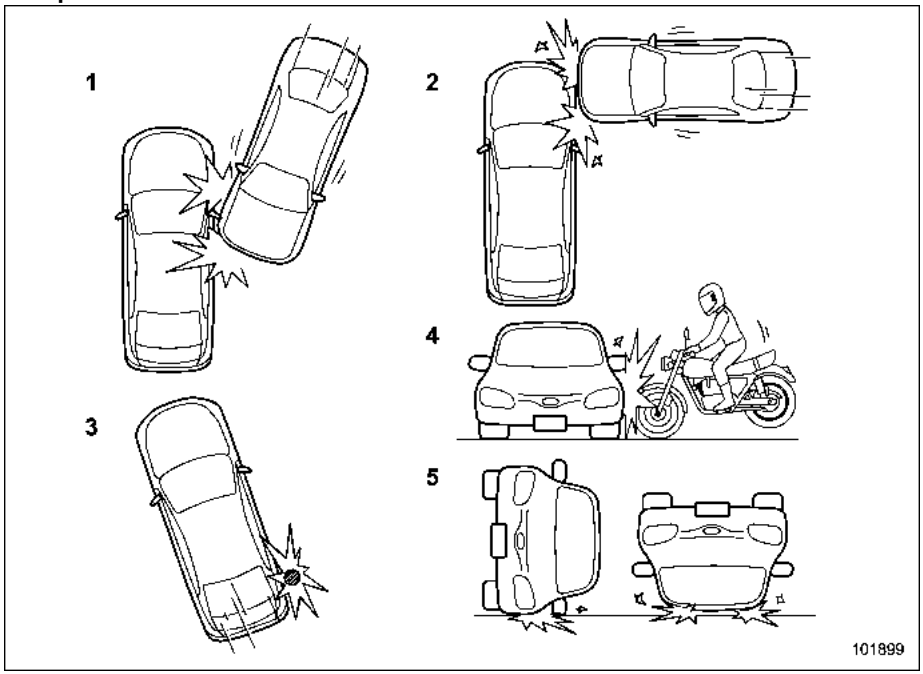


1) The vehicle is involved in an oblique side-on impact.
2) The vehicle is involved in a side-on impact in an area outside the vicinity of the passenger compartment.
3) The vehicle strikes a telephone pole or similar object.
4) The vehicle is involved in a side-on impact from a motorcycle.
5) The vehicle rolls onto its side or roof.

There are many types of collisions which might not necessarily require SRS curtain airbag deployment. In the event of accidents like those illustrated, the SRS curtain airbag may not deploy depending on the level of accident forces involved.

**Russia models**

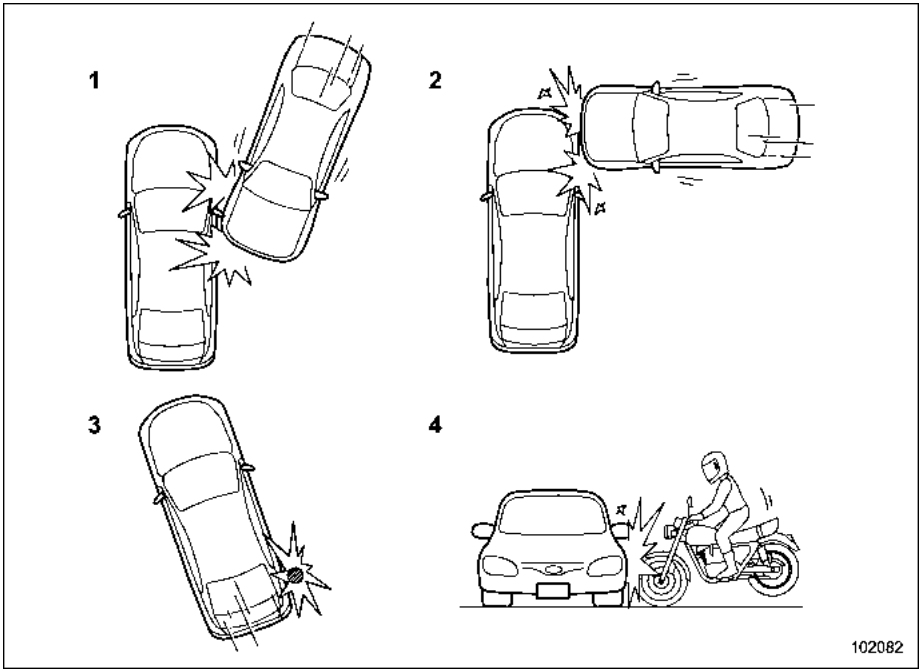


1) The vehicle is involved in an oblique side-on impact.
2) The vehicle is involved in a side-on impact in an area outside the vicinity of the passenger compartment.
3) The vehicle strikes a telephone pole or similar object.
4) The vehicle is involved in a side-on impact from a motorcycle.

There are many types of collisions which might not necessarily require SRS curtain airbag deployment. In the event of accidents like those illustrated, the SRS curtain airbag may not deploy depending on the level of accident forces involved.

– CONTINUED –

### ▽ When will the SRS side airbag and SRS curtain airbag not deploy?

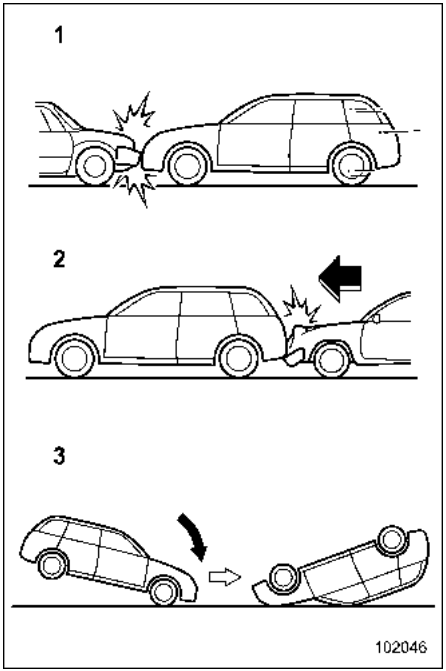


1) The vehicle is involved in frontal collision with another vehicle (moving or stationary).
2) The vehicle is struck from behind.
3) The vehicle pitches end over end.

In the event of accidents like those illustrated, the SRS side airbag and SRS curtain airbag are not designed to deploy in most cases.

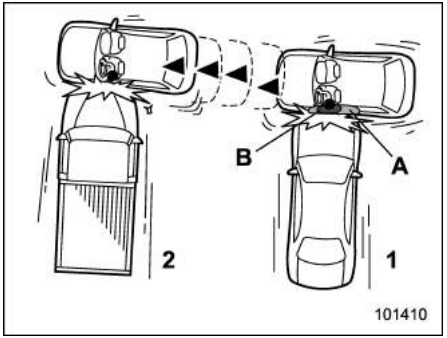


1) First impact
2) Second impact
A) SRS curtain airbag
B) SRS side airbag

In an accident where the vehicle is struck from the side more than once, the SRS side airbag and SRS curtain airbag deploy only once on the first impact.

Example: In the case of a double side impact collision, first with one vehicle and immediately followed by another from the same direction, once the SRS side airbag and SRS curtain airbag are activated on the first impact, they will not be activated on the second.

## ■ SRS airbag system monitor

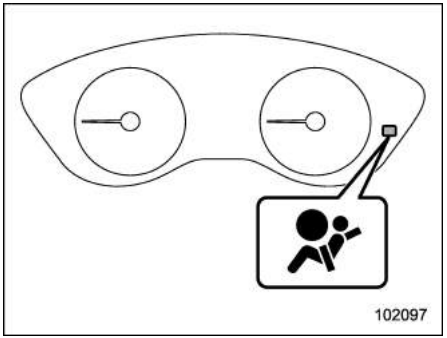


**SRS airbag system warning light**

A diagnostic system continually monitors the readiness of the SRS airbag system (including front seatbelt pretensioners) with the ignition switch in the “ON” position. The SRS airbag system warning light will show normal system operation by illuminating for approximately 6 seconds when the ignition switch is turned to the “ON” position.

The following components are monitored by the indicator.

- Front sub sensor
- Airbag control module (including impact sensor [all models] and rollover sensor [Russia models])
- Front door impact sensor

- Front passenger's frontal airbag ON/OFF indicator (if equipped)
- Frontal airbag module
  - Driver's side
  - Front passenger's side
- Driver's seat position sensor (if equipped)
- Knee airbag module (driver's side)
- Side airbag sensor
- Side airbag module
- Front passenger's occupant detection sensor (if equipped)
- Front passenger's occupant detection control module (if equipped)
- Adaptive force limiter (if equipped)
- Seatbelt buckle switch (front passenger's side – if equipped)
- Curtain airbag sensor
- Curtain airbag module
- Shoulder pretensioner
- Lap belt pretensioner
- Satellite safing sensor
- All related wiring

**WARNING**

**If the warning light exhibits any of the following conditions, there may be a malfunction in the seatbelt pretensioners and/or SRS airbag system.**

- **Flashing or flickering of the warning light**
- **No illumination of the warning light when the ignition switch is first turned to the "ON" position**
- **Continuous illumination of the warning light**
- **Illumination of the warning light while driving**

**We recommend that you have the system checked immediately by your nearest SUBARU dealer. Unless checked and properly repaired, the seatbelt pretensioners and/or SRS airbags will operate improperly (e.g. SRS airbags may inflate in a very minor collision or not inflate in a severe collision), which may increase the risk of injury.**

## ■ SRS airbag system servicing

**WARNING**

- **When discarding an airbag module or scrapping the entire vehicle damaged by a collision, we recommend that you consult your SUBARU dealer.**
- **The SRS airbag has no user-serviceable parts. Do not use electrical test equipment on any circuit related to the SRS airbag system. For required servicing of the SRS airbag, we recommend that you consult your nearest SUBARU dealer. Tampering with or disconnecting the system's wiring could result in accidental inflation of the SRS airbag or could make the system inoperative, which may result in serious injury.**

**CAUTION**

**If you need service or repair in areas indicated in the following list, we recommend that you have the work performed by an authorized SUBARU dealer. The SRS airbag control module, impact sensors**

– CONTINUED –

and airbag modules are stored in the following areas.

- Under the center of the instrument panel
- On both the right and left sides at the front of the vehicle
- Steering wheel and column and nearby areas
- Bottom of the steering column and nearby areas
- Top of the dashboard on front passenger's side and nearby areas
- Each front seat and nearby area
- Inside each center pillar
- Inside each front door
- In each roof side (from the front pillar to a point over the rear seat)
- Between the rear seat cushion and rear wheel house on each side
- Under the rear center seat

In the event that the SRS airbag system is deployed, we recommend that you have the system replaced with genuine SUBARU parts at an authorized SUBARU dealer.

## NOTE

In the following cases, we recommend that you contact your SUBARU dealer as soon as possible.

- The front part of the vehicle was involved in an accident in which the SRS frontal airbags did not deploy.
- The pad of the steering wheel, the cover over the front passenger's frontal airbag, or either roof side (from the front pillar to a point over the rear seat) is scratched, cracked, or otherwise damaged.
- The center pillar, rear wheel house or rear sub frame, or an area near these parts, was involved in an accident in which the SRS side airbag and SRS curtain airbag did not deploy.
- The fabric or leather of either front seatback is cut, frayed, or otherwise damaged.
- The rear part of the vehicle was involved in an accident.

## ■ Precautions against vehicle modification

**WARNING**

To avoid accidental activation of the system or rendering the system inoperative, which may result in serious injury, no modifications should be made to any components or wiring of the SRS airbag system.

This includes the following modifications.

- Installation of custom steering wheels
- Attachment of additional trim materials to the dashboard
- Installation of custom seats
- Replacement of seat fabric or leather
- Installation of additional fabric or leather on the front seat
- Attachment of a hands-free microphone or any other accessory to a front pillar, a center pillar, a rear pillar, the windshield, a side window, an assist grip, or any other cabin surface that would be near a deploying SRS curtain airbag.

- **Installation of additional electrical/electronic equipment such as a mobile two-way radio on or near the SRS airbag system components and/or wiring is not advisable. This could interfere with proper operation of the SRS airbag system.**

**CAUTION**

**Do not perform any of the following modifications. Such modifications can interfere with proper operation of the SRS airbag system.**

- **Attachment of any equipment (bush bar, bullbar, winches, snow plow, skid/sump plate, etc.) to the front end other than genuine SUBARU accessory parts or parts that match the quality of genuine SUBARU accessory parts.**
- **Modification of the suspension system or front end structure.**
- **Installation of a tire of different size and construction from the tires specified on the vehicle placard attached to the driver's door pillar or specified for individual vehicle models in this Owner's Manual.**
- **Attachment of any equipment (side steps or side sill protectors, etc.) to the side body other than genuine SUBARU accessory parts specially designed for SRS side airbags, or parts that match the quality of genuine SUBARU accessory parts specially designed for SRS side airbags (only for models with side airbags).**

We recommend that you always consult your SUBARU dealer if you want to install any accessory parts on your vehicle.

Keys ..... 2-2
Key number plate ..... 2-2
Keyless access with push-button start system (if equipped) ..... 2-3
Access key fob ..... 2-3
Safety precautions ..... 2-4
Locking and unlocking by holding the access key fob ..... 2-6
Unlock using PIN Code Access ..... 2-10
Power saving function ..... 2-12
Power saving function of access key fob ..... 2-12
Disabling keyless access function ..... 2-12
Warning chimes and warning light ..... 2-13
When access key fob does not operate properly ..... 2-14
Replacing battery of access key fob ..... 2-14
Technical information for Europe models ..... 2-14
Immobilizer ..... 2-14
Immobilizer indicator light ..... 2-14
Key replacement ..... 2-14
Technical information of the radio wave regulation ..... 2-15
Remote keyless entry system ..... 2-15
Locking the doors ..... 2-16
Unlocking the doors ..... 2-17
Automatic locking (models without double locking system) ..... 2-17
Unlocking the rear gate ..... 2-17
Opening/closing the front windows (except Australia models) ..... 2-17
Replacing battery ..... 2-18
Technical information ..... 2-18
Door locks ..... 2-18
Locking and unlocking from the outside ..... 2-18
Locking and unlocking from the inside ..... 2-19
Key lock-in prevention function (models without double locking system) ..... 2-20
Battery drainage prevention function ..... 2-20
Double locking system (if equipped) ..... 2-21
To set double locking system ..... 2-21
To cancel double locking system ..... 2-22
In an emergency ..... 2-22
If a battery goes dead ..... 2-23
To reset double locking system ..... 2-23
Function disabling unlocking with the power door locking switch (Australia models) ..... 2-23
Child safety locks ..... 2-24
Windows ..... 2-24
Power window operation ..... 2-25
Initialization of power window with one-touch auto up/down function ..... 2-27
Rear gate ..... 2-27
Lock/unlock ..... 2-27
Open/close ..... 2-28
Sunroof (if equipped) ..... 2-29
Sunroof switches ..... 2-29
Sunshade ..... 2-30

# Keys

## NOTE

**For models with “keyless access with push-button start system”, refer to “Keyless access with push-button start system” ☞2-3.**

The following keys are provided with the vehicle.

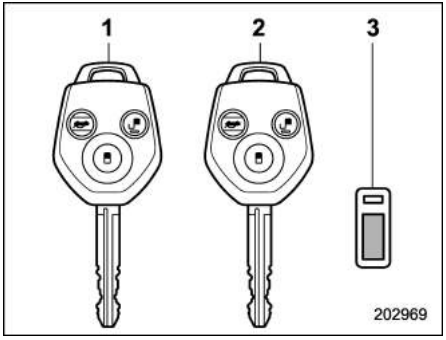


1) Master key (Main)
2) Master key (Sub)
3) Key number plate

## NOTE

**Your vehicle may have three master keys depending on the vehicle market for which it was designed.**

All keys can be used in the following locations.

- Ignition switch
- Driver’s door

## NOTE

**The remote keyless entry system can be used to control the following functions.**

- **Locking/unlocking the doors and rear gate**
- **Opening/closing the windows (except Australia models)**

**For detailed information, refer to “Remote keyless entry system” ☞2-15.**

**CAUTION**

**Do not attach a large key holder or key case to the key. If it bangs against your knees while you are driving, it could turn the ignition switch from the “ON” position to the “ACC” or “LOCK” position, thereby stopping the engine.**

## ■ Key number plate

The key number is stamped on the key number plate attached to the key set. Write down the key number and keep it in another safe place, not in the vehicle. This number is needed to make a replacement key if you lose your key or lock it inside the vehicle.

For information on making replacement keys, refer to “Key replacement” ☞2-14.

# Keyless access with push-button start system (if equipped)

## ■ Access key fob

The following access key fobs are provided with the vehicle.

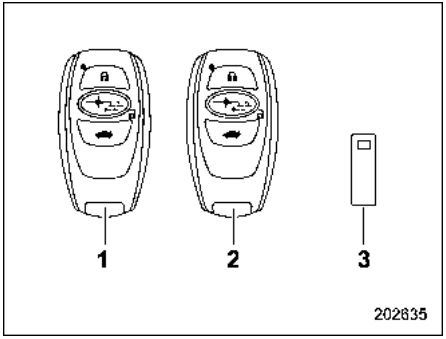


1) Access key fob (main)
2) Access key fob (sub)
3) Key number plate

The keyless access with push-button start system allows you to perform the following functions when you are carrying the access key fob.

- Locking and unlocking of the doors and rear gate. Refer to “Locking and unlocking by holding the access key fob” ☞2-6.
- Starting and stopping the engine. Refer to “Starting and stopping engine (models with push-button start system)” ☞7-9.

## NOTE

- **The remote keyless entry system can be used to control the following functions.**
  - **– Locking/unlocking the doors and rear gate**
  - **– Opening/closing the windows (except Australia models)**

**For detailed information, refer to “Remote keyless entry system” ☞2-15.**

- **Carefully store the key number plate supplied with the access key fob. It is necessary for vehicle repair and additional registration of access key fob. For details, refer to “Key replacement” ☞2-14.**

A emergency key is attached to each access key fob.

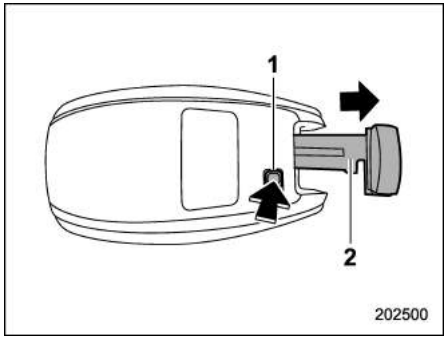


1) Release button
2) Emergency key

While pressing the release button of the access key fob, take out the emergency key.

The emergency key is used for locking and unlocking the driver’s door.

– CONTINUED –

## ■ Safety precautions

**WARNING**

**If you wear an implanted pacemaker or an implanted defibrillator, stay at least 22 cm (8.7 in) away from the transmitting antennas installed on the vehicle.**

**The radio waves from the transmitting antennas on the vehicle could adversely affect the operation of implanted pacemakers and implanted defibrillators.**

**If you wear electronic medical equipment other than an implanted pacemaker or an implanted defibrillator, before using the keyless access with push-button start system, refer to "Radio waves used for the keyless access with push-button start system" mentioned later, and contact the electronic medical equipment manufacturer for more information. The radio waves from the transmitting antennas on the vehicle could adversely affect the operation of the electronic medical equipment.**

**"Radio waves used for the keyless access with push-button start system"**

- **The keyless access with push-button start system uses radio waves of the following frequency* in addition to the radio waves used for the remote keyless entry system. The radio waves are periodically output from the antennas installed on the vehicle as shown in the following illustrations.**

  *** Radio frequency: 134.2 kHz**

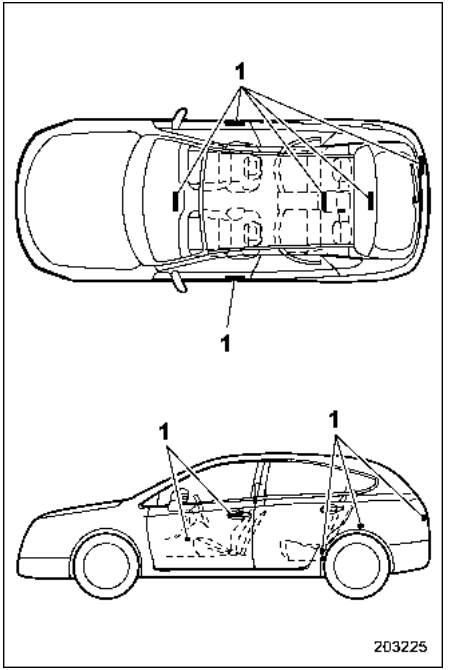


1) Antenna

**CAUTION**

- **Never leave or store the access key fob inside the vehicle or within 2 m (6.6 ft) around the**

vehicle (e.g., in the garage). The access key fob may be locked inside the vehicle, or the battery may discharge rapidly. Note that the push-button ignition switch may not turn on in some cases depending on the location of the access key fob.

- The access key fob contains electronic components. Observe the following precautions to prevent malfunctions.
  - It is recommended to have the access key battery replaced at an authorized SUBARU dealer to avoid the risk of damage.
  - Do not get the access key fob wet. If the access key fob gets wet, wipe it off immediately and let it dry completely.
  - Do not apply strong impacts to the access key fob.
  - Never leave the access key fob in direct sunlight or anywhere that may become hot, such as on the dashboard.
  - Do not wash the access key fob in an ultrasonic washer.
  - Do not leave the access key fob in humid or dusty locations.
  - Do not leave the access key fob near personal computers or home electric appliances.
  - Keep the access key fob away from magnetic sources.
  - Do not leave the access key fob near a personal computer or home electrical appliance.
  - Do not leave the access key fob near a battery charger or any electrical accessories.
  - Do not apply metallic window tint or attach metallic objects to the windows.
  - Do not fit non genuine accessories or parts.
- If the access key fob is dropped, the emergency key inside may become loose. Be careful not to lose the emergency key.
- When traveling in an airplane, do not press the button of the access key fob. If any button of the access key fob is pressed, radio waves are emitted and may affect the operation of the airplane. When carrying the access key fob in a bag, take measures to prevent the buttons from being pressed accidentally.

## NOTE

- The operational/non-operational setting for the keyless access function can be changed. For the setting procedure, refer to “Disabling keyless access function” ☞2-12.
- For detailed information about the operation method for the push-button ignition switch while the keyless access function is switched to the non-operational mode, refer to “Access key fob – if access key fob does not operate properly” ☞9-27.
- The keyless access with push-button start system uses weak radio waves. The status of the access key fob and environmental conditions may interfere with the communication between the access key fob and the vehicle under the following conditions, and it may not be possible to lock or unlock the doors or start the engine.
  - When operating near a facility where strong radio waves are transmitted, such as a broadcast station and power transmission lines
  - When products that transmit radio waves are used, such as an access key fob or a remote trans-

– CONTINUED –

mitter key of another vehicle
– When carrying the access key fob of your vehicle together with an access key fob or a remote transmitter of another vehicle
– When the access key fob is placed near wireless communication equipment such as a cell phone
– When the access key fob is placed near a metallic object
– When metallic accessories are attached to the access key fob
– When carrying the access key fob with electronic appliances such as a laptop computer
– When the battery of the access key fob is discharged

- The access key fob is always communicating with the vehicle and is continuously using the battery. Although the life of the battery varies depending on the operating conditions, it is approximately 1 to 2 years. If the battery becomes fully discharged, replace it with a new one.
- If an access key fob is lost, it is recommended that all of the remaining access key fobs be reregistered. For reregistration of an access key fob, we recommend that you contact a SUBARU dealer.
- For a spare access key fob, we recommend that you contact a SUBARU dealer.
- Up to 7 access key fobs can be registered for one vehicle.
- Do not leave the access key fob in the storage spaces inside the vehicle, such as the door pocket, dashboard and the corner of the cargo area. Vibrations may damage the access key fob or turn on the switch, possibly resulting in a lockout.
- After the vehicle battery is discharged or replaced, initialization of the steering lock system may be required to start the engine. In this case, perform the following procedure to initialize the steering lock.

(1) Turn the push-button ignition switch to the “OFF” position. For details, refer to “Switching power status” ☞3-7.
(2) Open and close the driver’s door.
(3) Wait for approximately 10 seconds.

When the steering is locked, the initialization is completed.

- Do not leave the access key fob in the following places.
  – On the instrument panel
  – On the floor
  – Inside the glove box
  – Inside the door trim pocket
  – On the rear seat
  – In the cargo area

If you do, the following situations may occur.
– The access key fob is mistakenly locked inside the vehicle.
– A false warning issues although no malfunction actually occurs.
– No warning issues even when any malfunction occurs.

## ■ Locking and unlocking by holding the access key fob

When the access key fob is carried within the operating range, the doors and the rear gate can be locked/unlocked just by touching the door handle.

### NOTE

The vehicle can also be locked/unlocked with the remote keyless entry system. For details, refer to “Remote keyless entry system” ☞2-15.

### ▼ Operating ranges

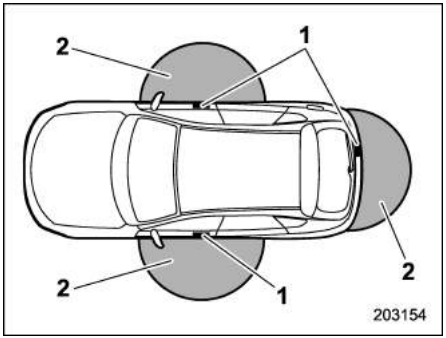


1) Antenna
2) Operating range (approximately 40 to 80 cm (16 to 32 in))

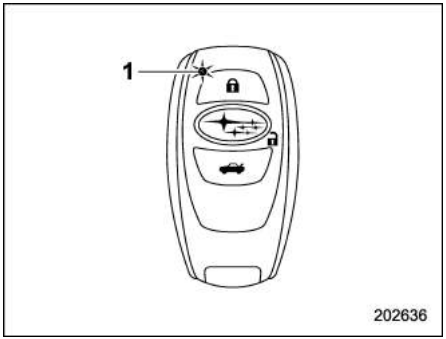


1) LED indicator

When the access key fob is within either of the operating ranges of the front doors, the LED indicator on the access key fob flashes. When the keyless access functions are disabled, the LED indicator does not flash unless a button on the access key fob is pressed.

## NOTE

**● If the access key fob is placed too close to the vehicle body, the keyless access function may not operate properly. If it does not operate properly, repeat the operation from further away.**

**● If the access key fob is placed near the ground or in an elevated location from the ground, even if it is in the indicated operating range, the keyless access function may not operate properly.**

**● When the access key fob is within the operating range, it is possible for anyone, even someone who is not carrying the access key fob, to operate the keyless access function. Note that locking and unlocking can be operated only by the door handle, door lock sensor, rear gate opener button or rear lock button in the operating range in which the access key fob is detected.**

**● It is not possible to lock the doors and rear gate using the keyless access function when the access key fob is inside the vehicle. However, depending on the status of the access key fob and the environmental conditions, the access key fob may be locked inside the vehicle. Before locking, make sure that you have the access key fob.**

**● When the battery of the access key fob is discharged, or when operating it in a location with strong radio waves or noise (e.g., near a radio tower, power plant, broadcast station, large display, airport, electrical sign board or an area where wireless equipment is used), or while talking on a cell phone, the operating ranges may be reduced, or the keyless access function may not operate.**

**In such a case, perform the procedure described in "Locking and unlocking" ☞9-27.**

**● The doors may lock or unlock when the car is being washed or exposed to significant amount of water contacting the door handle while the access key fob is still in the operating range.**

– CONTINUED –

### ▼ How to lock and unlock

You can perform the following operation when you are carrying the access key fob.

- Lock and unlock the doors
- Lock and unlock rear gate

## NOTE

- **It is not possible to lock the doors and rear gate using the keyless access function when the push-button ignition switch is in the "ACC" or "ON" position. Refer to "Switching power status" ☞3-7.**
- **If the door handle is gripped with a gloved hand, the door lock may not be released.**
- **If the door lock sensor is touched three times or more repeatedly, the system will ignore the sensor operation.**
- **When performing the locking procedure too quickly, locking may not have been completed. After locking the doors, it is recommended to pull the REAR door handles to confirm that the doors have been locked.**
- **Within 3 seconds after locking the doors and the rear gate by using the keyless access function, it is not possible to unlock the doors and/or the rear gate by using the keyless access function.**
- **If any of the doors or the rear gate is open, the doors and the rear gate cannot be locked.**
- **If any of the doors (or the rear gate) is not fully closed, the hazard warning flashers will flash five times (the outside warning chime also sounds five times for models with "keyless access with push-button start system") to alert you that the doors (or the rear gate) are not properly closed.**
- **When locking, be sure to carry the access key fob to prevent locking the access key fob in the vehicle.**
- **The setting of the hazard warning flasher operation can be changed by your SUBARU dealer. We recommend that you contact your SUBARU dealer for details. Also, for models with the combination meter display (color LCD), the setting of the hazard warning flasher operation can be changed by operating the combination meter display (color LCD). For details, refer to "Vehicle Setting" ☞3-43.**

### ▽ Locking with the door lock sensor

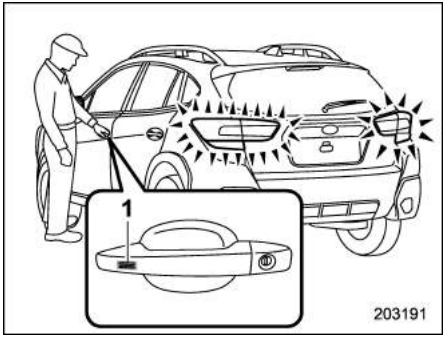


1) Door lock sensor

Carry the access key fob, close all doors including the rear gate and touch the door lock sensor on the door handle. All doors including the rear gate will be locked. Also, the hazard warning flashers will flash once.

### ▽ Locking with the rear lock button

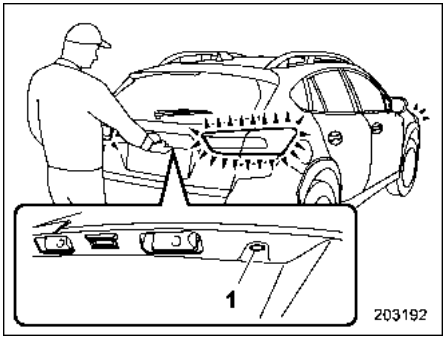


1) Rear lock button

Carry the access key fob, close all doors including the rear gate and press the rear lock button. The rear gate and all doors will be locked. Also, the hazard warning flashers will flash once.

### ▽ Unlocking

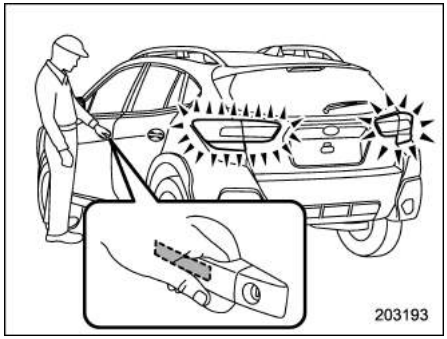


Carry the access key fob, and grip the door handle.

- **Models without double locking system:**

All doors and the rear gate will be unlocked. Also, the hazard warning flashers will flash twice.

- **Models with double locking system:**
  - The driver's door handle:
    Only the driver's door will be unlocked.
  - The front passenger's door handle:
    All doors and the rear gate will be unlocked.

Also, the hazard warning flashers will flash twice.

### ▽ Opening rear gate

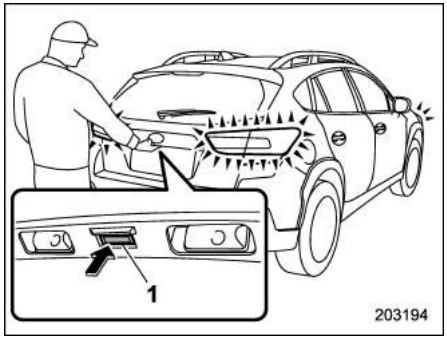


1) Rear gate opener button

Carry the access key fob, and press the rear gate opener button.

- **Models without double locking system:**

The rear gate and all doors will be unlocked, and the rear gate will be opened. Also, the hazard warning flashers will flash twice.

- **Models with double locking system:**

Only the rear gate will unlock and open. Also, the hazard warning flashers will flash twice.

– CONTINUED –

### ▼ Door unlock selection function (if equipped)

The unlocking doors can be selected.

The settings are the following.

- **Operational:**

Only the driver's door or the rear gate will be unlocked.

- **Non-operational:**

All doors and the rear gate are unlocked.

## NOTE

- **This setting can be changed by a SUBARU dealer.**
- **For security reasons, confirm the setting is set as "operational" or "non-operational".**

### ▼ Automatic locking (models without double locking system)

If any of the doors or the rear gate was not opened within 30 seconds after unlocking, they will be automatically locked again.

The function's operational/non-operational setting and the time until automatic locking takes place can be changed by a SUBARU dealer. For more details, we recommend that you contact a SUBARU dealer.

For models with the combination meter display (color LCD), the setting and the time can be changed by operating the combination meter display (color LCD). For details, refer to "Vehicle Setting" ☞3-43.

## ■ Unlock using PIN Code Access

While all doors including the rear gate are locked, you can unlock the doors (including rear gate) without a key by pressing the rear lock button.

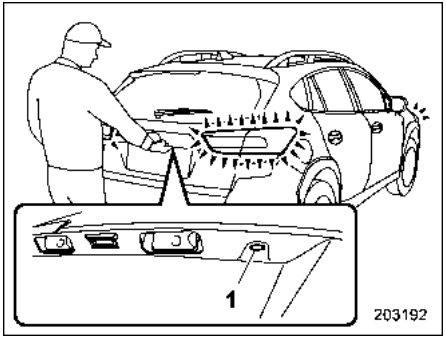


1) Rear lock button

## NOTE

**PIN Code Access will be helpful if the access key fob is accidentally left in the vehicle. It is recommended that a 5-digit security code (PIN code) be registered.**

### ▼ Preparation for registering a PIN code

1. Turn off the ignition switch.
2. Close all doors (including rear gate).
3. Press and hold the "🔒" button on the access key fob. Then all doors (including rear gate) will be locked.
4. Keep the "🔒" button pressed, and press the rear lock button within 5 seconds after step 3.
5. Press and hold the rear lock button for more than 5 seconds. Confirm a chirp sound.
6. Release the "🔒" button and rear lock button.
7. Press the "🔓" button on the access key fob while the chirp sounds.

Then the chirp will stop and the preparation is complete.

## NOTE

**Press the "🔓" button within 30 seconds of step 6 to end the preparation mode and move on to the registration stage. Unless the "🔓" button is pressed within 30 seconds after step 6, the PIN code registration will be canceled.**

### ▼ Registration for a PIN code

For example, to register “32468” as the PIN code, perform the following procedure.

1. Press the rear lock button three times.
2. After a chirp sounds once, press the rear lock button twice.
3. After a chirp sounds once, press the rear lock button four times.
4. After a chirp sounds once, press the rear lock button six times.
5. After a chirp sounds once, press the rear lock button eight times.
6. Perform steps 1 to 5 again within approximately 30 seconds after the chirp starts sounding intermittently.
7. All doors will be unlocked and locked. Then the PIN code will be registered.

## NOTE

- **Press the rear lock button ten times to enter “0”.**
- **Change the PIN code frequently to protect your vehicle from theft.**
- **If you have lent your vehicle to another person, confirm that the PIN code has not been changed or deleted. If the PIN code has been changed or deleted, reregister a new PIN code.**
- **If you make an error during the registration procedure, press the “🔒” or “🚗” button on the access key fob. Then, start over from the procedure described in “Preparation for registering a PIN code”.**
- **To protect your vehicle from theft, you cannot register a string of the same five numbers together, such as “00000”, nor “12345” as a PIN code.**
- **Do not register your vehicle license plate number or simple numbers such as “11122” or “12121” as a PIN code. Doing so will increase the risk of vehicle theft.**
- **When you try to register “22222”, the registered PIN code will be deleted. You cannot unlock the doors by PIN Code Access until a new code is registered.**
- **After registering a new PIN code, make sure that you can unlock the doors using the PIN code.**
- **The PIN code cannot be deleted while the keyless access function is disabled by operating the access key fob.**
- **Reregister the PIN code in the following case.**
  - **when you forget the PIN code**
  - **when you want to change the PIN code**

### ▼ Unlocking

Perform steps 1 to 5 described in “Registration for a PIN code”.

## NOTE

- **You cannot unlock by PIN Code Access in the following cases.**
  - **when the access key fob is within the operating ranges**
  - **when the ignition switch is in the “ACC” or “ON” position**
- **If you make an operation error during the unlocking procedure, start over with the unlocking procedure after waiting for 5 seconds or longer.**
- **To protect your vehicle from theft, a buzzer will sound if incorrect PIN codes are entered five times continuously. If this occurs, you cannot unlock the doors by PIN Code Access for 5 minutes.**

– CONTINUED –

## ■ Power saving function

The keyless access function will be disabled in the following cases to protect the access key fob battery and the vehicle battery.

● **Case 1**: When the keyless access function and the remote keyless entry system have not been used for 2 weeks or longer while all doors are locked

Operate one of the following items to recover the keyless access function:

– Unlock the doors by operating any procedure other than gripping the front passenger's door handle
– Lock the doors
– Open a door and then close it

● **Case 2**: When the access key fob has been left in the operating range for 10 minutes or longer while all doors are locked

Operate one of the following items to recover the keyless access function:

– Unlock the doors by gripping the door handle
– Unlock the doors by pressing the rear gate opener button
– Lock the doors by touching the door lock sensor
– Lock or unlock the doors by using the remote keyless entry system
– Lock or unlock the doors by using the power door locking switch
– Open either of the front doors

## ■ Power saving function of access key fob

This function stops the access key fob from receiving signals and helps minimize the battery consumption of the access key fob.

1. Press the "🔓" button twice while holding the "🔒" button.

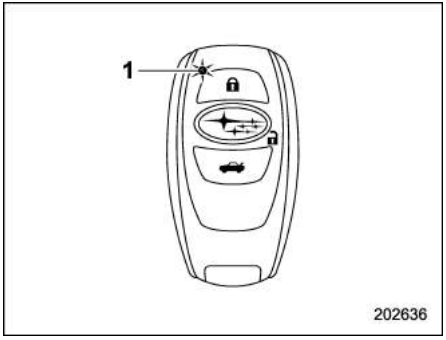


1) LED indicator

2. Confirm that the LED indicator blinks 4 times to notify that the setting is complete.

When the access key fob is in the power save mode, the keyless access function and push-button start system will not be available.

To cancel the power save mode, press one of the buttons on the access key fob.

## ■ Disabling keyless access function

**⚠ WARNING**

**If you wear an implanted pacemaker or an implanted defibrillator, operate the driver's door to disable the keyless access function. Otherwise, the operation of an implanted pacemaker or implanted defibrillator may be affected by the radio waves from the transmitter antenna.**

When the vehicle is not going to be used for a long time, or when you choose not to use the keyless access function, the keyless access function can be disabled.

### NOTE

● **The locking and unlocking function by the remote keyless entry system is not disabled.**

● **To start the engine while the functions are disabled, perform the procedure described in "Starting engine" ☞9-28.**

### ▼ Disabling functions

#### ▽ By operating the access key fob

If you have registered a PIN code for PIN Code Access, you can disable the keyless access function by operating the access key fob. For details about registering a PIN code, refer to "Unlock using PIN Code Access" ☞2-10.

1. Open the driver's door.
2. Rotate the lock lever toward the lock position.

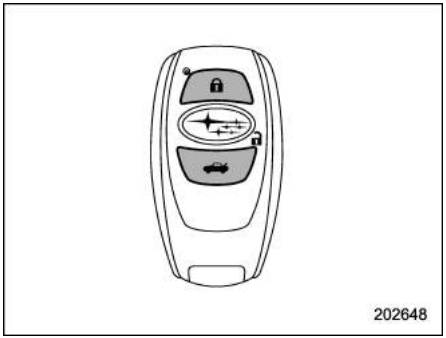


3. Press and hold the "🔒" button and "🚗" button on the access key fob simultaneously for more than 5 seconds.

A chirp sound will be heard, and the function will be disabled.

#### ▽ By operating the driver's door

1. Sit in the driver's seat, and close the door.

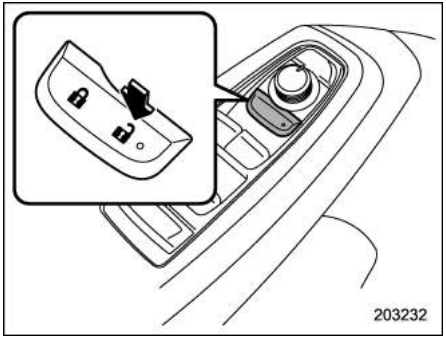


2. Push "🔒" on the power door.
3. Within 5 seconds after step 2 is performed, open the driver's door.
4. Within 5 seconds after step 3 is performed, push "🔒" on the power door locking switch twice while the door is open.
5. Within 10 seconds after step 4 is performed, close and open the driver's door twice.
6. Within 10 seconds after step 5 is performed, push "🔒" on the power door locking switch twice while the door is open.
7. Within 10 seconds after step 6 is performed, close and open the driver's door once.
8. Within 5 seconds after step 7 is performed, close the door.

A chirp sound will be heard, and the functions will be disabled.

## NOTE

**In steps 4 and 6, press the power door locking switch slowly. If the switch is pressed quickly, the functions may not be disabled.**

### ▼ Enabling functions

When the procedure to disable the functions is performed again, the functions are enabled.

A chirp sound will be heard once.

## ■ Warning chimes and warning light

The keyless access with push-button start system sounds a warning chime and flashes the access key warning light on the combination meter in order to minimize improper operations and help protect your vehicle from theft.

For details, refer to "Warning chimes and warning light of the keyless access with push-button start system" ☞3-28.

– CONTINUED –

## ■ When access key fob does not operate properly

Refer to “Access key fob – if access key fob does not operate properly” ☞9-27.

## ■ Replacing battery of access key fob

Refer to “Replacing battery of access key fob” ☞11-53.

## ■ Technical information for Europe models

- This device complies with the essential requirements of Directive 2014/53/EU. A copy of the original Declaration of Conformity and the CE marking are found in chapter 13.
- Hereby, DENSO CORPORATION declares that this FJ16-1/14AHK is in compliance with the essential requirements and other relevant provisions of Directive 2014/53/EU.

# Immobilizer

The immobilizer system is designed to prevent an unauthorized person from starting the engine. Only keys registered with your vehicle’s immobilizer system can be used to operate your vehicle. If engine start is attempted with an unregistered access key fob or key, the engine will not start. Even if the engine does start, it will stop after a few seconds. This system, however, is not a 100% anti-theft guarantee.

**⚠ CAUTION**

- **Do not place the key under direct sunlight or anywhere it may become hot.**
- **Do not get the key wet. If the key gets wet, wipe it dry with a cloth immediately.**
- **Do not modify or remove the system. If modified or removed, the proper operation of the system cannot be guaranteed.**

## NOTE

- **To protect your vehicle from theft, please pay close attention to the following security precautions:**
  - **– Never leave your vehicle unattended with its keys inside.**
  - **– Before leaving your vehicle, close all windows and the sunroof (if equipped), and lock the doors and rear gate.**
  - **– Do not leave spare keys or any record of your key number in the vehicle.**
- **The vehicle has a maintenance-free type immobilizer system.**

## ■ Immobilizer indicator light

Refer to “Immobilizer indicator light” ☞3-33.

## ■ Key replacement

Your key number plate will be required if you ever need a replacement key made. Any new key must be registered for use with your vehicle’s immobilizer system before it can be used. The maximum number of keys that can be registered for use with one vehicle is as follows.

- Four (models without “keyless access with push-button start system”)
- Seven (models with “keyless access with push-button start system”)

One key that has already been registered

is required in order to register a new key.

## NOTE

**If you lose a key, the lost key's ID code still remains in the memory of the vehicle's immobilizer system. For security reasons, the lost key's ID code should be erased from the memory. To erase the lost key's ID code, all keys that will be used are required.**

**For details about new key registration and erasing the lost key's ID code, we recommend that you contact your SUBARU dealer.**

### ■ Technical information of the radio wave regulation

These devices comply with the essential requirements and provisions such as the Radio and Telecommunications Terminal Equipment Directive 1999/5/EC and Radio Equipment Directive 2014/53/EU.

Requirements and provisions differ depending on the country.

See chapter 13 to confirm the information relevant to each country (e.g., a copy of the original Declaration of Conformity and the CE marking are required for the EU).

## Remote keyless entry system

**⚠ CAUTION**

- **When you carry the remote transmitter on an airplane, do not press the button of the remote transmitter while in the airplane. When any button of the remote transmitter is pressed, radio waves are sent and may affect the operation of the airplane. When you carry the remote transmitter in a bag on an airplane, take measures to prevent the buttons of the remote transmitter from being pressed.**
- **Do not expose the transmitter to shocks.**
- **Do not take the transmitter apart.**
- **Do not get the transmitter wet. If it gets wet, wipe it dry with a cloth immediately.**

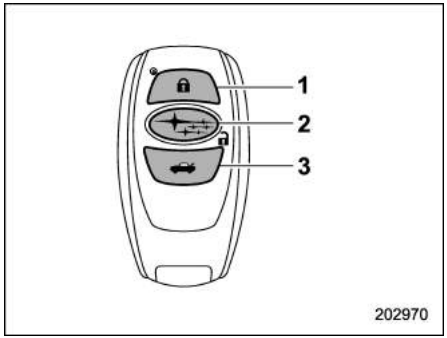


**Access key fob**
1) Lock button
2) Unlock button
3) Rear gate unlock button

– CONTINUED –

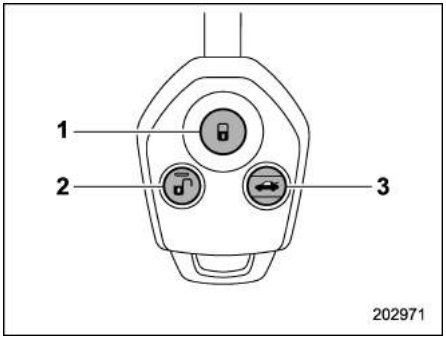


**Remote transmitter**
1) Lock button
2) Unlock button
3) Rear gate unlock button

The remote transmitter can be used within a distance of approximately 10 m (33 ft) of the vehicle. The remote keyless entry system has the following functions.

- Lock or unlock all of the doors including the rear gate
- Operate the front windows* (except Australia models).

*: To use this function, it must first be activated by your SUBARU dealer.

The system's operable distance will be shorter in areas near a facility or electronic equipment emitting strong radio waves such as a power plant, broadcast station, TV tower, or remote controller of home electronic appliances.

## NOTE

- **Before leaving the vehicle, make sure that the doors are locked.**
- **The remote keyless entry system does not operate when the key is inserted in the ignition switch or when any of the doors or the rear gate is not fully closed.**
- **For models with "keyless access with push-button start system", when the lock button on the access key fob is pressed while the access key fob is placed too close to the vehicle body, unlocking by the keyless access functions may not work. In such a case, the functions will recover by unlocking using the remote keyless entry system.**
- **The setting of the hazard warning flasher operation can be changed by your SUBARU dealer. We recommend that you contact your SUBARU dealer for details. Also, for models with the combination meter display (color LCD), the setting of the hazard warning flasher operation can be changed by operating the combination meter display (color LCD). For details, refer to "Vehicle Setting" ☞3-43.**

## ■ Locking the doors

Pressing the lock button on the access key fob/transmitter locks all doors and the rear gate.

## NOTE

- **If any of the doors (or the rear gate) is not fully closed, the hazard warning flashers will flash five times (the outside warning chime also sounds five times for models with "keyless access with push-button start system") to alert you that the doors (or the rear gate) are not properly closed.**
- **For models with "keyless access with push-button start system", the front door will be unlocked if you grip the front door handle while an access key fob is in the operating range. Pull the REAR door handle to make sure that the doors have been locked.**

## ■ Unlocking the doors

Press the unlock button on the access key fob/transmitter near the vehicle.

▼ **Models without door unlock selection function**

- **Models without double locking system:**

All doors and the rear gate will be unlocked. Also, the hazard warning flashers will flash twice.

- **Models with double locking system:**

1. Only the driver's door will be unlocked. Also, the hazard warning flashers will flash twice.
2. If you press the unlock button again within 5 seconds of unlocking the driver's door, all of the other doors and the rear gate will be unlocked.

▼ **Models with door unlock selection function**

### NOTE

**For security reasons, confirm the setting is set as "operational" or "non-operational".**

The door unlock selection function makes it possible to unlock the driver's door without unlocking any other doors. The operational/non-operational setting for this function can be changed by a SUBARU dealer.

- **Operational:**

Only the driver's door will be unlocked. If you press the unlock button again within 5 seconds of unlocking the driver's door, all of the other doors and the rear gate will be unlocked.

- **Non-operational:**

All doors and the rear gate are unlocked.

For further details, we recommend that you consult a SUBARU dealer.

## ■ Automatic locking (models without double locking system)

When the unlock button is pressed, all of the doors and the rear gate are automatically locked 30 seconds later unless any one of the four doors or the rear gate is opened during that period.

The automatic locking function's operational/non-operational setting and the setting for the locking time period (the time period after which locking takes place) can be changed by a SUBARU dealer. We recommend that you contact the nearest SUBARU dealer for details.

Also, for models with a combination meter display (color LCD), this setting can be changed by operating the combination meter display (color LCD). For details, refer to "Vehicle Setting" ☞3-43.

## ■ Unlocking the rear gate

Press the rear gate unlock button to unlock the rear gate.

The hazard warning flashers will flash twice.

## ■ Opening/closing the front windows (except Australia models)

With the engine turned off, you can open and close the front windows by using the remote keyless entry system from outside the vehicle. Operate the front windows in the following way.

- Press and hold the lock button to close the front windows.
- Press and hold the unlock button to open the front windows.

### NOTE

**We recommend that you consult your SUBARU dealer to have this function set to enabled or disabled.**

– CONTINUED –

## ■ Replacing battery

Refer to “Replacing key battery” ☞11-52.

## ■ Technical information

The trade, model and supplier’s names of this device are as follows.

- Equipment’s trade name: SUBARU
- Equipment’s model name: TB1G077
- Supplier’s name: ALPS ELECTRIC

**For Europe:**

This device complies with the essential requirements of Directive 2014/53/EU. A copy of the original Declaration of Conformity and the CE marking are found in the chapter 13.

# Door locks

## ■ Locking and unlocking from the outside

### ▼ How to lock and unlock the vehicle by using the key

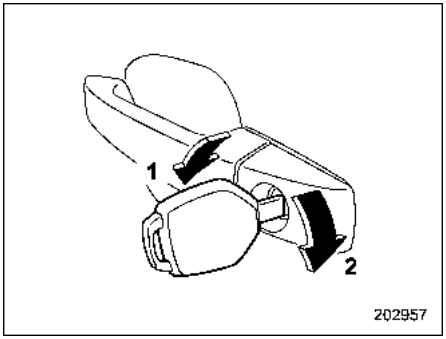


1) Rotate the key toward the front to lock.
2) Rotate the key toward the rear to unlock.

### NOTE

- **The emergency key (models with an access key fob) is directional. If the key cannot be inserted, change the direction that the grooved side is facing and insert it again.**

- Models without a double locking system:

To lock the driver’s door from the outside with the key, turn the key toward the front.

To unlock the door, turn the key toward the rear.

### NOTE

**To lock all doors including the rear gate, lock any door other than the driver’s door from the inside of the vehicle, and then lock the driver’s door. For details about locking from inside the vehicle, refer to “Locking and unlocking from the inside” ☞2-19.**

- Models with a double locking system:

To lock the doors and the rear gate from the outside with the key, turn the key toward the front.

To unlock the doors and the rear gate, turn the key toward the rear.

### ▼ How to lock the vehicle without using the key

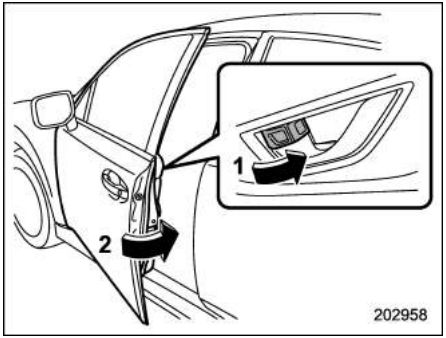


**Example of front doors**

1) Rotate the lock lever forward.
2) Hold the outside door handle pulled while closing the front doors.

To lock the front door from the outside without the key, rotate the lock lever forward and hold the outside door handle pulled while closing the door.

To lock the rear door from the outside without the key, rotate the lock lever forward and close the door.

## NOTE

- **Make sure that you do not leave the key inside the vehicle when locking the doors from the outside without the key.**
- **For models with the double locking system, it is not possible to place the lock lever on the driver's door in the locking position while the driver's door is open. The door lock levers function only when the driver's door is securely closed and the double locking system is not set.**

## ■ Locking and unlocking from the inside

### ▼ How to use the lock lever

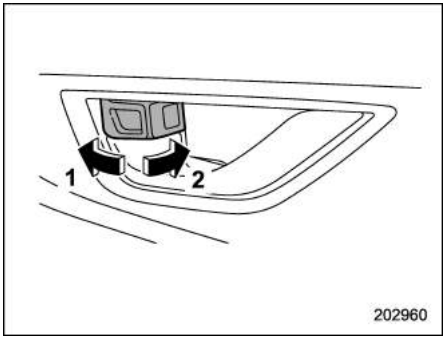


1) Rotate the lock lever rearward to unlock.
2) Rotate the lock lever forward to lock.

Always make sure that all doors and the rear gate are closed before starting to drive.

The red mark on the lock lever appears when the door is unlocked.

**⚠ WARNING**

**Keep all doors locked when you drive, especially when small children are in your vehicle. Along with the proper use of seatbelts and child restraints, locking the doors reduces the chance of being thrown out of the vehicle in an accident. It also helps prevent passengers from falling out if a door is accidentally opened, and intruders from unexpectedly opening doors and entering your vehicle.**

## NOTE

**For models with double locking system, if the double locking system is activated, the door will not be unlocked even when you move the door lock lever rearward.**

### ▼ How to operate the power door locking switches

All doors and the rear gate can be locked and unlocked by the power door locking switch located at the driver's side door.

– CONTINUED –

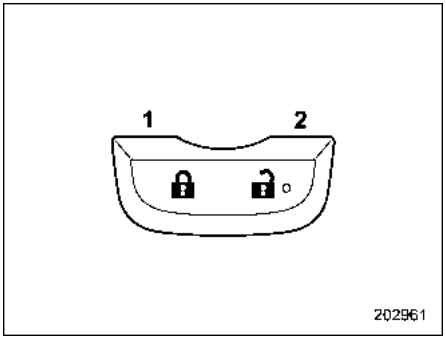


**Example**
1) Press to lock.
2) Press to unlock.

## NOTE

- **Models with double locking system, pushing the unlocking position of the power door locking switch has no effect when the double locking system is activated.**
- **For Australia models, after locking all doors and the rear gate using the remote transmitter, pushing the unlock position of the power door locking switch has no effect.**

## ■ Key lock-in prevention function (models without double locking system)

Under the following conditions, all the doors will not lock when the power door locking switch is pushed with the driver door open.

- The key is still in the ignition switch (models without “keyless access with push-button start system”)
- The ignition switch is in the “ACC” or “ON” position (models with “keyless access with push-button start system”)

## NOTE

- **This function’s operational/non-operational setting can be changed by a SUBARU dealer. We recommend that you contact a SUBARU dealer for details.**
- **When leaving the vehicle, make sure that you are holding the key before locking the doors.**

### ▼ Behavior with key lock-in prevention function non-operational

We recommend that you consult your SUBARU dealer about setting this to the non-operational setting.

The doors can be locked in the following way.

- If the lock lever is turned to the front (lock) position with the driver’s door open and the driver’s door is then closed, the driver’s door is locked.
- If the spare key is used to lock the driver’s door from the outside of the vehicle, the door is locked.

## ■ Battery drainage prevention function

If a door or the rear gate is not completely closed, the interior lights will remain illuminated as a result. However, several lights are automatically turned off by the battery drainage prevention function to prevent the battery from discharging. The following interior lights are affected by this function.

| Item | Switch position | Automatically turning off |
|---|---|---|
| Map lights | DOOR | Approximately 20 minutes later |
| Dome light | DOOR | Approximately 20 minutes later |
| Ignition switch light | — | Approximately 20 minutes later |
| Cargo area light | DOOR | Approximately 20 minutes later |

## NOTE

- **The default setting for this function is set as “operational”. The operational/non-operational setting of this function can be changed by a SUBARU dealer. We recommend that you contact your SUBARU dealer to change the setting.**
- **When leaving the vehicle, please make sure that all doors and the rear gate are completely closed.**
- **For models with the push-button ignition switch, the battery drainage prevention function does not operate while the ignition switch is in “ACC” or “ON” position.**
- **For models without the push-button ignition switch, the battery drainage prevention function does not operate while the key is in the ignition switch.**

# Double locking system (if equipped)

The double locking system is an anti-theft system. It operates when the doors are locked using the key or remote transmitter. While this system is operating, the power door locking switch and door lock levers inside the cabin cannot be used to unlock the doors.

**⚠ WARNING**

**Never set the double locking system while passengers are inside the vehicle. With the system set, people in the vehicle would not be able to open the doors from the inside. The result could be serious injuries or death.**

## ■ To set double locking system

### ▼ Setting system using key

1. Remove the key from the ignition switch and have all occupants get out of the vehicle.
2. Close all of the doors and the rear gate securely.

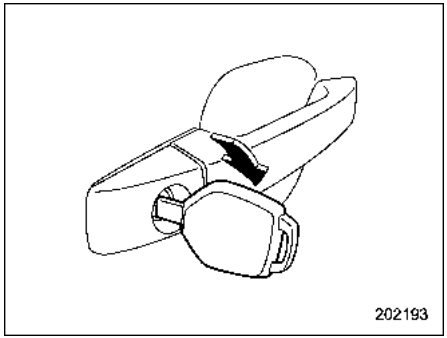


3. Insert the key into the key cylinder of the driver’s door, then turn it in the locking direction to set the double locking system. All of the doors and the rear gate will be locked.

– CONTINUED –

### ▼ Setting system using remote transmitter

1. Remove the key from the ignition switch and have all occupants get out of the vehicle.
2. Close all of the doors and the rear gate securely.
3. Press the "🔒" button on the access key fob or "🔒" button on the transmitter. The hazard warning flashers will flash once and the double locking system will be set. All of the doors and the rear gate will be locked.

## NOTE

**For models with the keyless access function, it is possible to set the double locking system by touching the door lock sensor.**

## ■ To cancel double locking system

### ▼ Canceling system using key

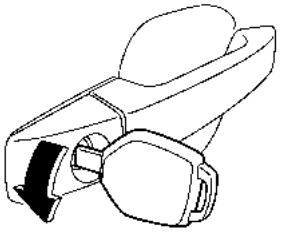

202192

Insert the key into the key cylinder of the driver's door, then turn it in the unlocking direction to cancel the double locking system. All of the doors and the rear gate will be unlocked.

### ▼ Canceling system using remote transmitter

Press the "🔓" button on the access key fob or "🔓" button on the transmitter. The hazard warning flashers will flash twice and the double locking system will be canceled. The driver's door will be unlocked.

## NOTE

**For models with the keyless access function, it is possible to cancel the double locking system by gripping the door handle.**

## ■ In an emergency

If you become trapped inside the vehicle owing to an accident or some other unexpected circumstance, unlock the doors using one of the following methods.

- Remove the key from the ignition switch, then press the "🔓" button on the transmitter (models without keyless access function).
- Turn the push-button ignition switch off, then press the "🔓" button on the access key fob (models with keyless access function).
- Set the ignition switch to the "ON" position and open the driver's window. Insert the key into the key cylinder of the

driver's door and turn it in the unlocking direction.

- Break one of the windows and climb out through the window opening.

## ■ If a battery goes dead

If the double locking system cannot be canceled because the vehicle battery or transmitter battery has gone dead or because of a blown fuse or other electrical problem, insert the key into the key cylinder of the driver's door and turn it in the unlocking direction.

## ■ To reset double locking system

The double locking system must be reset when the vehicle battery has been temporarily disconnected for replacement or charging. To reset the system, turn the key once in the unlocking direction or press the "🔓" button on the access key fob or "🔓" button on the transmitter. The double locking system will then operate normally.

### NOTE

**For models with the keyless access function, it is possible to reset the double locking system by gripping the door handle.**

# Function disabling unlocking with the power door locking switch (Australia models)

**⚠ WARNING**

**Never lock the doors using the remote keyless entry system while passengers are inside the vehicle. Doing so activates the function that disables unlocking with the power door locking switch and so people in the vehicle would not be able to open the doors from the inside. This could result in serious injury or death.**

Australia models are fitted with an anti-theft function that disables door unlocking with the power door locking switch. This function is activated in the following situations, disabling the doors from being unlocked using the power door locking switch.

- The doors are locked using the remote keyless entry system. Refer to "Remote keyless entry system" ☞2-15.
- The automatic locking function is in operation. Refer to "Automatic locking (models without double locking system)" ☞2-17.

This function is canceled when the doors are unlocked using the remote keyless entry system or the ignition switch is turned to "ON".

### NOTE

- **Even while this function is activated, doors can be unlocked using their lock levers, refer to "Locking and unlocking from the inside" ☞2-19.**
- **This function is not activated when the doors are locked using the key or power door locking switch.**

## Child safety locks

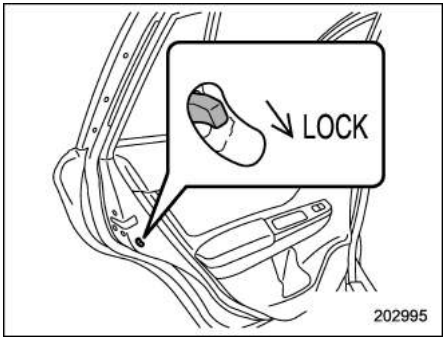


Each rear door has a child safety lock. When the child safety lock lever is in the "LOCK" position, the door cannot be opened from inside. The door can only be opened from the outside.

**WARNING**

**Always turn the child safety locks to the "LOCK" position when children sit on the rear seat. Serious injury could result if a child accidentally opens the door and falls out.**

## Windows

**WARNING**

**To avoid serious personal injury caused by accidental, child's mischief, or improper operation, the driver is responsible for obeying the following instructions without exception.**

- **When operating the power windows, be extremely careful to prevent anyone's fingers, arms, neck, head or other objects from being caught in the window.**
- **Always lock the passengers' windows using the lock switch when children are riding in the vehicle.**
- **Always carry the key when you leave the vehicle for safety reasons and never allow an unattended child to remain in the vehicle. Failure to follow this procedure could result in injury to a child operating the power window.**

The power windows operate when the ignition switch is in the "ON" position.

**NOTE**

- **It is possible to open and close the front windows from outside the vehicle by using the remote keyless entry system (except Australia models). Refer to "Opening/closing the front windows (except Australia models)" ☞2-17.**
- **If the power window system detects resistance, an impact or an abnormality, the window operation may be automatically stopped to prevent further jamming, entrapment or malfunction.**
  - **– The closing window slides down slightly and stops.**
  - **– The opening window stops sliding down.**
- **The power window system may detect resistance, an impact or an abnormality in the following cases.**
  - **– A substantial sized object is caught between the window and the window frame.**
  - **– A foreign object is caught between the window and the window frame.**
  - **– The vehicle drives over a deep pothole.**
- **The window cannot be closed for a few seconds after the window is automatically stopped by the system.**

## ■ Power window operation

### ▼ Power window switches

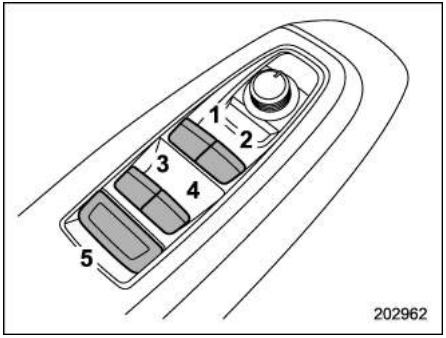


**Driver's side power window switches:**

1) For front left window (with one-touch auto up and down feature)
2) For front right window (with one-touch auto up and down feature)
3) For rear left window
4) For rear right window
5) Lock switch

All door windows can be controlled by the power window switch cluster at the driver side door.

These switches illuminate when activated.

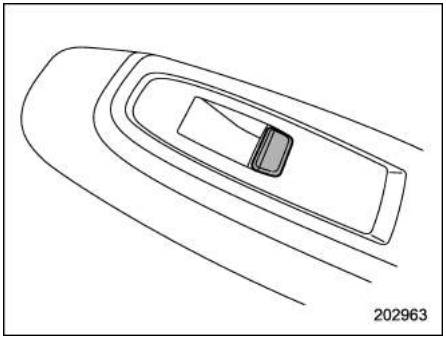


**Passenger's side power window switch:**

Each passenger's window can be controlled by the power window switch located on the door.

These switches illuminate when activated.

### ▼ Operating the window

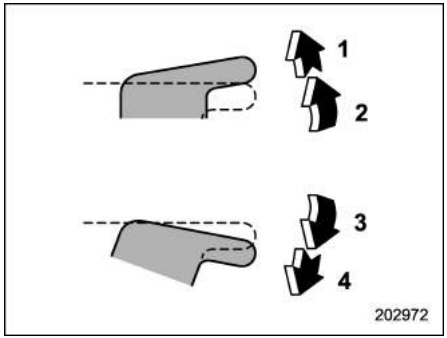


**With one-touch auto up and down feature:**

1) Automatically close*
2) Close
3) Open
4) Automatically open*

*: To stop the window halfway, operate the switch to opposite side.

– CONTINUED –

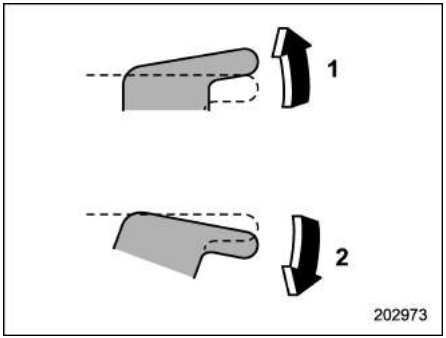


**Without one-touch auto up and down feature:**
1) Close
2) Open

## NOTE

**Avoid the following.**

- **Continuously operating a switch in the same direction after the window is fully closed or opened.**
- **Continuously operating three or more switches all at once in the same direction after the windows are fully closed or fully opened.**

**Either of the operations described above may cause the power window breaker to operate, making it impossible to open or close the window. Be sure to initialize the power windows.**

**Refer to "Initialization of power window with one-touch auto up/down function" ☞2-27.**

### ▼ Anti-entrapment function (windows with one-touch auto up/down function)

While closing the window automatically, if the window senses a substantial enough object trapped between the window and the window frame, it automatically moves down slightly and stops.

If a foreign object is caught while the window is opening automatically, the window will stop.

**⚠ CAUTION**

- **Never attempt to test this function using fingers, hands or other parts of your body.**
- **The anti-entrapment function may not operate properly if some object gets trapped just before the window fully closes.**

## NOTE

- **If a window detects an impact similar to that caused by trapping an object (for example, when the vehicle encounters a deep pothole), the anti-entrapment function may operate.**
- **The window cannot be operated for a few seconds after the anti-entrapment function operates.**

### ▼ Off delay function (windows with one-touch auto up/down function)

The windows can be operated for approximately 40 seconds even after the ignition switch is turned to the "ACC" or "OFF" position. If a front door is opened within 40 seconds, the off delay function is canceled.

### ▼ Locking the passengers' windows

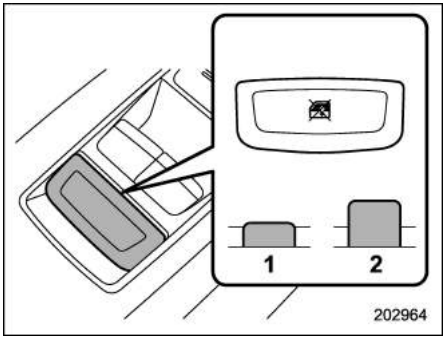


1) Lock
2) Unlock

When the lock switch is in the lock position, the rear passenger's window switches on the driver side door and the passengers' window switches cannot be operated.

When the indicator on the window switches does not illuminate, the window switch cannot be operated.

### ■ Initialization of power window with one-touch auto up/down function

If the power window automatic function (one-touch auto up and down function) does not operate properly, operate each window according to the following procedure in order to initialize the power window system.

1. Close the door.
2. Turn the ignition switch to the “ON” position.
3. Open the window completely and then press and hold down the power window switch for approximately 1 second.
4. Close the window completely and then pull and hold the power window switch for approximately 1 second.

## Rear gate

**⚠ WARNING**

- **To prevent dangerous exhaust gas from entering the vehicle, always keep the rear gate closed while the engine is running.**
- **Do not attempt to shut the rear gate while holding the recessed grip. Also avoid closing the rear gate by pulling on the recessed grip from inside the cargo area. There is a danger of your hand being caught and injured.**

### NOTE

**If the rear gate cannot be unlocked due to a discharged vehicle battery, a malfunction in the door locking/unlocking system or other causes, you can unlock it by manually operating the rear gate lock release lever.**

**For the procedure, refer to “Rear gate – if the rear gate cannot be opened” ☞9-29.**

### ■ Lock/unlock

The rear gate can be locked and unlocked using any of the following systems.

- Power door locking switch: Refer to “How to operate the power door locking switches” ☞2-19.
- Keyless access with the push-button start system (if equipped): Refer to “Keyless access with push-button start system” ☞2-3.
- Remote keyless entry system: Refer to “Remote keyless entry system” ☞2-15.
- Locking and unlocking from the outside with the key (models with double locking system): Refer to “Locking and unlocking from the outside” ☞2-18.

– CONTINUED –

## ■ Open/close

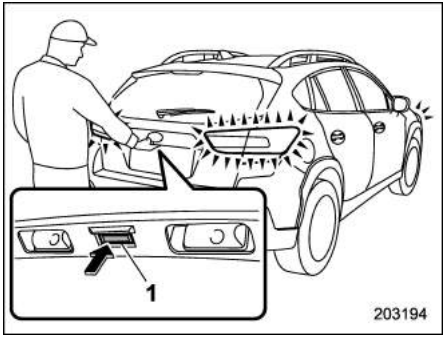


1) Rear gate opener button

**To open:**
First unlock the rear gate lock then push the rear gate opener button.

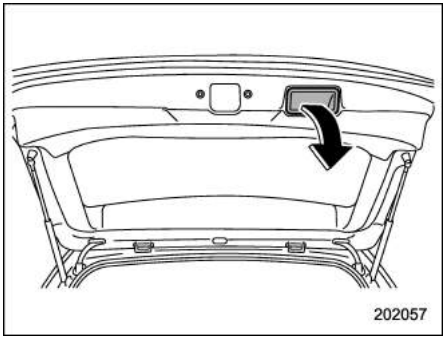


**To close:**
Lower the rear gate slowly and push down firmly until the latch engages.

The rear gate can be lowered easily if you pull down on the inside handle as shown in the illustration.

**⚠ CAUTION**

- **Do not jam a plastic bag in or place cellophane tape on the rear gate stays or scratch the stays while loading or unloading cargo. That could cause leakage of gas from the stays, which may result in their inability to hold the rear gate open.**
- **Be careful not to hit your head or face on the rear gate when opening or closing the rear gate and when loading or unloading cargo.**

## Sunroof (if equipped)

**WARNING**

**Never let anyone's hands, arms, head or any objects protrude from the sunroof. A person could be seriously injured if any of the following conditions occur.**

- **The vehicle stops suddenly.**
- **The vehicle turns sharply.**
- **The vehicle is involved in an accident.**
- **Body parts protruding from the vehicle are struck by outside objects.**

**To avoid serious personal injury caused by accidental, child's mischief, or improper operation, the driver is responsible for obeying the following instructions without exception.**

- **Before closing the sunroof, make sure that no one's hands, arms, head or other objects will be accidentally caught in the sunroof.**
- **Always carry the key when you leave the vehicle for safety reasons and never allow an unattended child to remain in the vehicle. Failure to follow this procedure could result in injury to a child operating the sunroof.**
- **Never try to check the anti-entrapment function by deliberately placing part of your body in the sunroof.**

**CAUTION**

- **Do not sit on the edge of the open sunroof.**
- **Do not operate the sunroof if falling snow or extremely cold conditions have caused it to freeze shut.**
- **The anti-entrapment function does not operate when the sunroof is being tilted down. Be sure to confirm safety before tilting the sunroof down.**
- **If the sunroof does not close, we recommend that you have the system checked by a SUBARU dealer.**

The sunroof operates only when the ignition switch is in the "ON" position.

### ■ Sunroof switches

#### ▼ Tilting sunroof

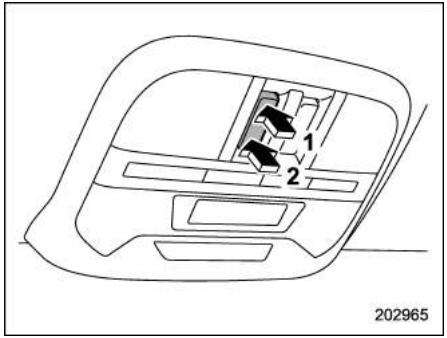


1) Up
2) Down

To raise the sunroof, press and hold the switch in the up side and release. To lower the sunroof, press and hold the switch in the down side.

**NOTE**

**Release the switch after the sunroof has been raised or has been lowered completely. Pressing the switch continuously may cause damage to the sunroof.**

– CONTINUED –

### ▼ Sliding sunroof

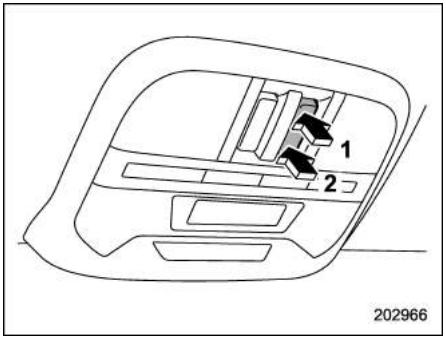


1) Open
2) Close

To open or close the sunroof using the automatic function, press and hold the switch toward the open/close side and release.

To stop the sunroof halfway, press a switch on the sunroof switch.

## NOTE

- **After washing the vehicle or after it rains, wipe away water on the roof prior to opening the sunroof to prevent drops of water from falling into the passenger compartment.**
- **For the sake of safety, it is recommended that you avoid driving with the sunroof fully opened.**

### ▼ Anti-entrapment function

When the sunroof senses a substantial enough object trapped between its glass and the vehicle's roof during closure, it automatically moves back to the fully open position and stops there. The anti-entrapment function may also be activated by a strong shock on the sunroof even when there is nothing trapped.

**⚠ CAUTION**

**Never attempt to test this function using fingers, hands or other parts of your body.**

## ■ Sunshade

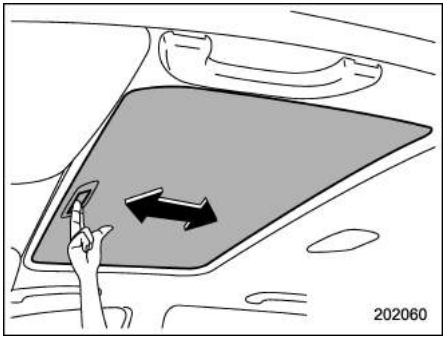


The sunshade can be slid forward or backward by hand while the sunroof is closed.

If the sunroof is opened, the sunshade also moves back.

Ignition switch (models without push-button start system) ..... 3-4
Key positions ..... 3-4
Key reminder chime (if equipped) ..... 3-5
Ignition switch light (if equipped) ..... 3-6
Push-button ignition switch (models with “keyless access with push-button start system”) ..... 3-6
Safety precautions ..... 3-6
Operating range for push-button start system ..... 3-6
Switch location ..... 3-7
Switching power status ..... 3-7
When access key fob does not operate properly ..... 3-8
Hazard warning flasher ..... 3-8
Meters and gauges ..... 3-9
Speedometer ..... 3-9
Tachometer ..... 3-9
Odometer ..... 3-9
Double trip meter ..... 3-10
Fuel gauge ..... 3-10
ECO gauge (if equipped) ..... 3-11
Combination meter settings ..... 3-11
Illumination brightness control ..... 3-12
Auto dimmer cancel function (if equipped) ..... 3-12
Warning and indicator lights ..... 3-13
Initial illumination for system check ..... 3-13
Seatbelt warning light and chime ..... 3-14
Rear seatbelt indicator light and chime (Europe and Australia models) ..... 3-15
SRS airbag system warning light ..... 3-16
Front passenger’s frontal airbag ON and OFF indicators (if equipped) ..... 3-16
Malfunction indicator light (Check Engine light) ..... 3-17
Coolant temperature low indicator light/Coolant temperature high warning light ..... 3-18
Charge warning light ..... 3-19
Oil pressure warning light ..... 3-19
Engine low oil level warning light ..... 3-19
AT OIL TEMP warning light ..... 3-20
Low tire pressure warning light (if equipped) ..... 3-20
ABS warning light ..... 3-22
Vehicle Dynamics Control warning light/Vehicle Dynamics Control operation indicator light ..... 3-22
Vehicle Dynamics Control OFF indicator light ..... 3-24
Brake system warning light (red) ..... 3-24
Electronic parking brake warning light/Vacuum pressure system warning light (yellow) ..... 3-25
Electronic parking brake indicator light ..... 3-25
Auto Vehicle Hold ON indicator light ..... 3-26
Auto Vehicle Hold operation indicator light ..... 3-26
Depress brake indicator light (if equipped) ..... 3-26
Low fuel warning light ..... 3-26
Windshield washer fluid warning light ..... 3-26
Engine hood open warning light (if equipped) ..... 3-26
Door open warning light ..... 3-26
All-Wheel Drive warning light (AWD models) ..... 3-27
Power steering warning light ..... 3-27
Automatic headlight beam leveler warning light (models with LED headlights) ..... 3-27
LED headlight warning light (models with LED headlights) ..... 3-28

Steering Responsive Headlight warning light/ Steering Responsive Headlight OFF indicator light (if equipped) ..... 3-28
Vehicle speed warning light (if equipped) ..... 3-28
Warning chimes and warning light of the keyless access with push-button start system (if equipped) ..... 3-28
Immobilizer indicator light ..... 3-33
Select lever/gear position indicator ..... 3-33
Turn signal indicator lights ..... 3-34
High beam indicator light ..... 3-34
High Beam Assist indicator light (green) (if equipped) ..... 3-34
High Beam Assist warning indicator (yellow) (if equipped) ..... 3-34
Cruise control indicator light (if equipped) ..... 3-34
Cruise control set indicator light (if equipped) ..... 3-35
Headlight indicator light ..... 3-35
Front fog light indicator light (if equipped) ..... 3-35
Rear fog light indicator light (if equipped) ..... 3-35
Auto Start Stop warning light/Auto Start Stop OFF indicator light (yellow) (if equipped) ..... 3-35
Auto Start Stop indicator light (green) (if equipped) ..... 3-36
Auto Start Stop No Activity Detected indicator light (if equipped) ..... 3-36
X-MODE indicator ..... 3-36
Hill descent control indicator ..... 3-36
SUBARU Rear Vehicle Detection warning indicator (if equipped) ..... 3-36
SUBARU Rear Vehicle Detection OFF indicator (if equipped) ..... 3-36
RAB warning indicator (if equipped) ..... 3-36
RAB OFF indicator (if equipped) ..... 3-36
Icy road surface warning indicator (if equipped) ..... 3-37
**Combination meter display (color LCD) (if equipped) ..... 3-37**
Basic operation ..... 3-38
Welcome screen (opening animation) and Good-bye screen (ending animation) ..... 3-38
Warning screen ..... 3-39
Telltale screen ..... 3-39
Basic screens ..... 3-40
Menu screens ..... 3-42
**Multi-function display (black and white) (if equipped) ..... 3-44**
Driving information display ..... 3-44
Outside temperature indicator ..... 3-49
X-MODE indicator ..... 3-49
Clock ..... 3-49
**Multi-function display (color LCD) (if equipped) ..... 3-50**
Features ..... 3-50
Welcome screen ..... 3-50
Self-check screen ..... 3-51
Interruption screen ..... 3-51
Basic operation ..... 3-52
Basic screens ..... 3-52
Setting screen ..... 3-59
How to get the source code using the open source ..... 3-65
**Clock ..... 3-66**
Setting the clock manually ..... 3-66
Setting the clock automatically ..... 3-69

Regulatory information.....3-69
Light control switch.....3-69
Headlights .....3-70
High/low beam change (dimmer) .....3-72
Headlight flasher.....3-73
High Beam Assist function (if equipped).....3-73
Daytime running light system (if equipped) .....3-76
Steering Responsive Headlight (SRH) (if equipped) .....3-77
SRH OFF switch.....3-77
Headlight beam leveler (if equipped) .....3-78
Automatic headlight beam leveler (models with LED headlights) .....3-78
Manual headlight beam leveler (models without LED headlights) .....3-78
Fog light switch .....3-81
Front fog light switch (if equipped).....3-81
Rear fog light switch (if equipped) .....3-82
Turn signal lever.....3-83
One-touch lane changer.....3-83
Wiper and washer.....3-83
Windshield wiper and washer switches.....3-86
Rear window wiper and washer switch.....3-89
Headlight washer (if equipped) .....3-90
Mirrors .....3-90
Inside mirror.....3-90
Auto-dimming mirror (if equipped) .....3-91
Outside mirrors .....3-91
Defogger and deicer.....3-93
Tilt/telescopic steering wheel .....3-95
Heated Steering Wheel system (if equipped).....3-95
Horn .....3-96

## Ignition switch (models without push-button start system)

**WARNING**

- **Never turn the ignition switch to the "LOCK" position while the vehicle is being driven or towed because that will lock the steering wheel, preventing steering control. And when the engine is turned off, it takes a much greater effort than usual to steer.**
- **Before leaving the vehicle, always remove the key from the ignition switch for safety and never allow an unattended child to remain in the vehicle. Failure to follow this procedure could result in injury to a child or others. Children could operate the power windows or other controls or even make the vehicle move.**

**CAUTION**

**Do not attach a large key holder or key case to either key. If it bangs against your knees while you are driving, it could turn the ignition switch from the "ON" position to the "ACC" or "LOCK" position, thereby stopping the engine.**

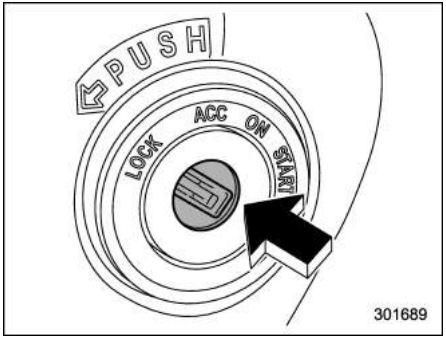


The ignition switch has four positions: LOCK, ACC, ON and START.

### NOTE

- **Keep the ignition switch in the "LOCK" position when the engine is not running.**
- **Using electrical accessories for a long time with the ignition switch in the "ON" or "ACC" position can cause the battery to go dead.**
- **If the ignition switch will not move from the "LOCK" position to the "ACC" position, turn the steering wheel slightly to the left and right as you turn the ignition switch.**

### ■ Key positions

| Position | Description |
|---|---|
| LOCK | The key can only be inserted or removed in this position. The ignition switch will lock the steering wheel when you remove the key. |
| ACC | In this position the electrical accessories (audio, accessory power outlet, etc.) can be used. |
| ON | This is the normal operating position after starting the engine. |
| START | The engine is started in this position. |

**CAUTION**

**Do not turn the ignition switch to the "START" position while the engine is running.**

## NOTE

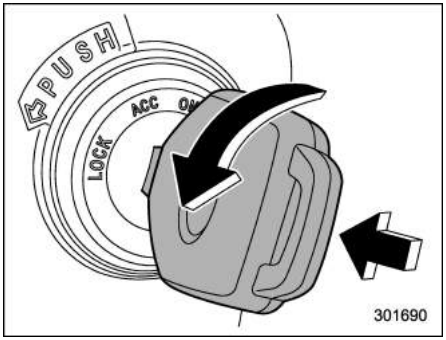


- **To turn the key from the "ACC" to "LOCK" position, the select lever must be in the "P" position and the key must be pushed in and turned.**
- **If your registered key fails to start the engine, pull out the key once (the security indicator light will blink), and then insert the key again and turn it to the "START" position again to restart the engine.**

- **The engine may not start in the following cases:**

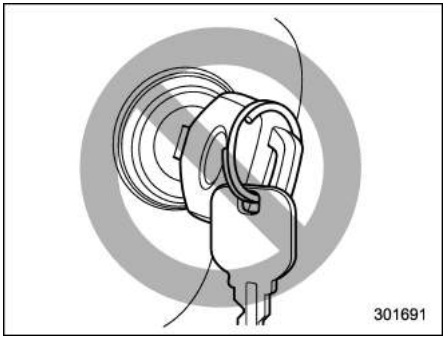


**– The key grip is touching another key or a metallic key holder.**

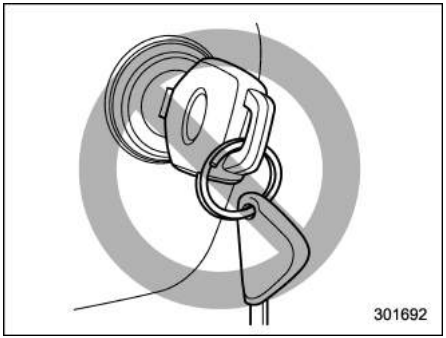


**– The key is near another key that contains an immobilizer transponder.**

**– The key is near or touching another transmitter.**

## ■ Key reminder chime (if equipped)

The reminder chime sounds when the driver's door is opened and the ignition switch is in the "LOCK" or "ACC" position.

The chime stops under the following conditions.

- when the ignition switch is turned to the "ON" position
- when the key is removed from the ignition switch
- when the driver's door is closed

– CONTINUED –

## ■ Ignition switch light (if equipped)

For easy access to the ignition switch in the dark, the ignition switch light illuminates when the driver’s door is opened or when the driver’s door is unlocked using the remote keyless entry transmitter.

The light remains illuminated for several tens of seconds and then gradually turns off under the following conditions.

- when the driver’s door is closed
- when the doors are unlocked using the remote keyless entry transmitter

The light turns off immediately under the following conditions.

- when the ignition switch is turned to the “ON” position
- when all doors and the rear gate are locked using the remote keyless entry transmitter

# Push-button ignition switch (models with “keyless access with push-button start system”)

## ■ Safety precautions

Refer to “Safety precautions” ☞2-4.

## ■ Operating range for push-button start system

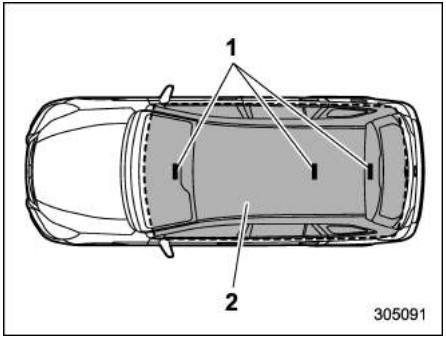


1) Antenna
2) Operating range

### NOTE

- **If the access key fob is not detected within the operating range of the antennas inside the vehicle, the push-button ignition switch and the engine start cannot be operated.**
- **Even when the access key fob is outside the vehicle, if it is placed too close to the glass, the engine may start.**
- **Do not leave the access key fob in the following places. It may become impossible to operate the push-button ignition switch and the engine start. It may also cause a false warning to issue although no malfunction actually occurs, or not to issue a warning when any malfunction occurs.**
  - **On the instrument panel**
  - **On the floor**
  - **Inside the glove box**
  - **Inside the door trim pocket**
  - **On the rear seat**
  - **In the cargo area**
- **When operating the push-button ignition switch or starting the engine, if the battery of the access key fob is discharged, perform the procedure described in “Access key fob – if access key fob does not operate properly” ☞9-27. In such a case, replace the battery immediately. Refer to “Replacing battery of access key fob” ☞11-53.**

## ■ Switch location

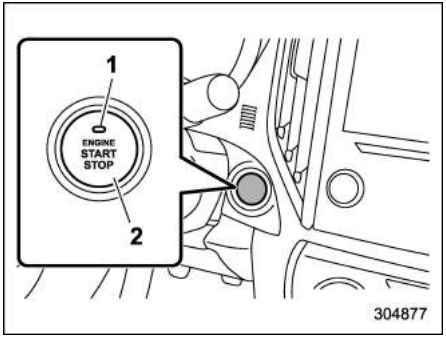


**Left-hand drive models**

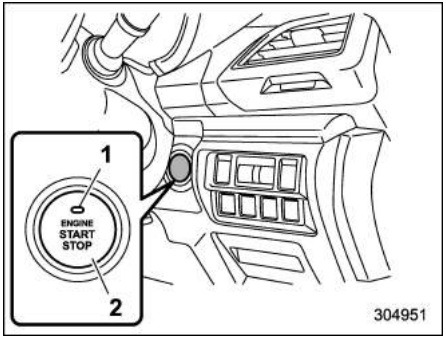


**Right-hand drive models**

1) Operation indicator
2) Push-button ignition switch

## ■ Switching power status

The power is switched every time the push-button ignition switch is pressed.

1. Carry the access key fob, and sit in the driver’s seat.
2. Shift the select lever in the “P” position.
3. Press the push-button ignition switch without depressing the brake pedal. Every time the button is pressed, the power is switched in the sequence of “OFF”, “ACC”, “ON” and “OFF”. The operation indicator on the push-button ignition switch illuminates or turns off as shown in the following chart.

| Power status | Indicator color | Operation |
|---|---|---|
| OFF | Turned off | Power is turned off. |
| ACC | Orange | The following parts can be used: wipers, washer, audio and accessory power outlet. |
| ON | Orange (while engine is stopped) | All electrical parts can be used. |
| | Turned off (while engine is running) | |

**⚠ CAUTION**

- **When the push-button ignition switch is left in “ON” (while the engine is not running) or “ACC” for a long time, it may result in vehicle battery discharge.**
- **Do not spill drinks or other liquids on the push-button ignition switch. It may cause a malfunction.**
- **Do not touch the push-button ignition switch with a hand soiled with oil or other contaminants. It may cause a malfunction.**
- **If the push-button ignition switch does not operate smoothly, stop the operation. We recommend that you contact a SUBARU dealer immediately.**
- **If the push-button ignition switch does not illuminate even when the instrument panel illumination is turned on, we recommend that you have the vehicle inspected at a SUBARU dealer.**

– CONTINUED –

- **If the vehicle was left in the hot sun for a long time, the surface of the push-button ignition switch may get hot. Be careful not to burn yourself.**

## NOTE

- **When operating the push-button ignition switch, firmly press it all the way.**
- **If the push-button ignition switch is pressed quickly, the power may not turn on or off.**

### ▼ Battery drainage prevention function

When the push-button ignition switch is left in “ON” or “ACC” for approximately 1 hour, the push-button ignition switch will be automatically switched to “OFF” to prevent the battery from going dead.

## ■ When access key fob does not operate properly

Refer to “Access key fob – if access key fob does not operate properly” ☞9-27.

# Hazard warning flasher

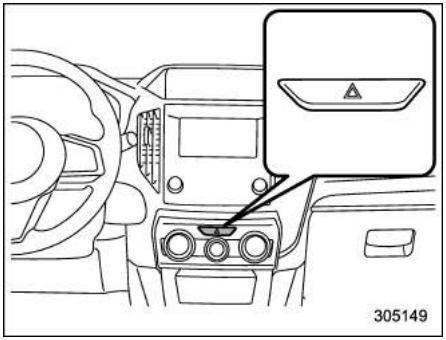


The hazard warning flasher is used to warn other drivers when you have to park your vehicle under emergency conditions. The hazard warning flasher works with the ignition switch in any position.

To turn on the hazard warning flasher, press the hazard warning button on the instrument panel. All the turn signal lights and the turn signal indicator lights will flash. To turn off the flasher, press the button again.

## NOTE

- **When the hazard warning flasher is on, the turn signals do not work.**
- **If you depress the brake pedal suddenly, the hazard warning flasher may blink rapidly. For details, refer to “Emergency Stop Signal” ☞7-21.**

# Meters and gauges

## NOTE

**Some of the meters and gauges on the combination meter use liquid-crystal displays. You will find their indications hard to see if you wear polarized glasses.**

## ■ Speedometer

The speedometer shows the vehicle speed.

### ▼ Speed warning chime (if equipped)

When the speed is over approximately 120 km/h (75 mph), a chime sounds.

## ■ Tachometer

The tachometer shows the engine speed in thousands of revolutions per minute.

**⚠ CAUTION**

**Do not operate the engine with the pointer of the tachometer in the red zone. In this range, fuel injection will be cut by the engine control module to protect the engine from overrev-ving. The engine will resume run-ning normally after the engine speed is reduced below the red zone.**

## ■ Odometer

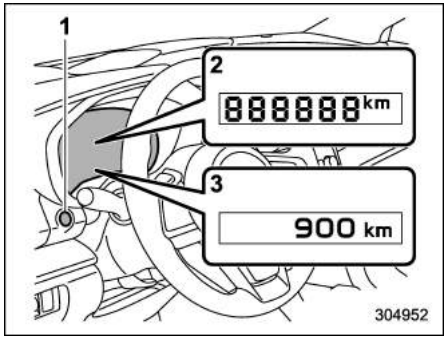


1) TRIP RESET switch
2) Type A combination meter
3) Type B combination meter

This meter displays the odometer when the ignition switch is in the “ON” position.

The odometer shows the total distance that the vehicle has been driven.

## NOTE

**If you press the TRIP RESET switch when the ignition switch is in the “LOCK”/“OFF” or “ACC” position, the odometer/trip meter will light up.**

**The indicators will turn off when:**

- **The TRIP RESET switch is not oper-ated for approximately 10 seconds.**
- **The driver’s door is opened and then closed.**

– CONTINUED –

## ■ Double trip meter

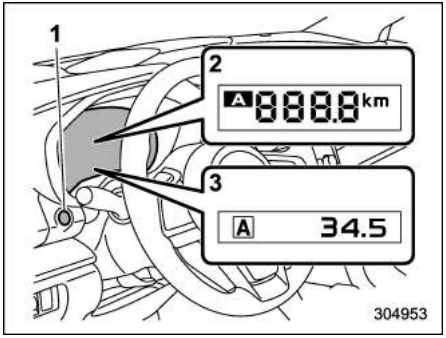


1) TRIP RESET switch
2) Type A combination meter
3) Type B combination meter

This combination meter has two trip meters.

This meter displays a trip meter when the ignition switch is in the “ON” position.

The trip meter shows the distance that the vehicle has been driven since you last set it to zero.

The display can be switched as shown in the following sequence by pressing the TRIP RESET switch.

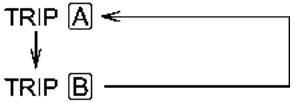


To set the trip meter to zero, select the A trip or B trip meter by pressing the TRIP RESET switch and keep the TRIP RESET switch pressed for more than 2 seconds.

**⚠ CAUTION**

**To ensure safety, do not attempt to change the function of the indicator during driving, as an accident could result.**

### NOTE

- **If the connection between the combination meter and battery is broken for any reason such as vehicle maintenance or fuse replacement, the data recorded on the trip meter will be lost.**
- **If you press the TRIP RESET switch when the ignition switch is in the “LOCK”/“OFF” or “ACC” position, the odometer/trip meter will light up. It is possible to switch between the A trip meter and B trip meter indications while the odometer/trip meter is lit up.**

**In addition, it is possible to reset the trip meter by pressing and holding the TRIP RESET switch.**

**The indicators will turn off when:**

– **The TRIP RESET switch is not operated for approximately 10 seconds.**

– **The driver’s door is opened and then closed.**

## ■ Fuel gauge

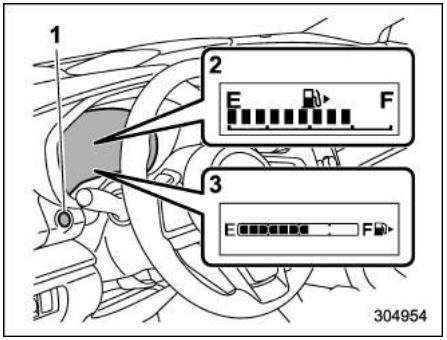


1) TRIP RESET switch
2) Type A combination meter
3) Type B combination meter

The fuel gauge is displayed when the ignition is in the “ON” position, and it shows the approximate amount of fuel remaining in the tank.

The gauge indication may change slightly during braking, turning or acceleration due to fuel level movement in the tank.

### NOTE

- **You will see the “⛽▶” sign in the fuel gauge. This indicates that the fuel filler**

**door (lid) is located on the right side of the vehicle.**

- **If you press the TRIP RESET switch while the ignition switch is in the "LOCK"/"OFF" or "ACC" position, the fuel gauge will light up and indicate the amount of fuel remaining in the tank.**

**The indicators will turn off when:**

– **The TRIP RESET switch is not operated for approximately 10 seconds.**
– **The driver's door is opened and then closed.**

## ■ ECO gauge (if equipped)

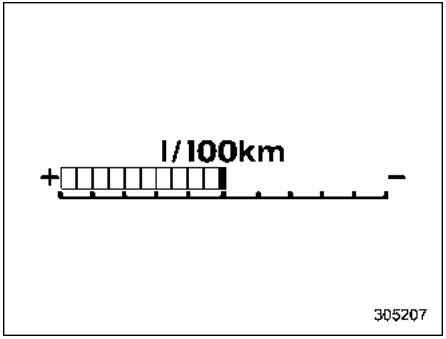


The ECO gauge shows the difference between the current rate of fuel consumption and the average rate of fuel consumption since the trip meter was last reset.

If the ECO gauge moves towards the right side, this indicates better fuel efficiency.

### NOTE

- **The ECO gauge shows only an approximate indication of fuel efficiency.**
- **After resetting the trip meter, the average rate of fuel consumption is not shown until you have driven for 1 km (or 1 mile). Before that time, the ECO gauge does not operate.**

## ■ Combination meter settings

Meter and vehicle settings can be set on the combination meter.

### ▼ Type A combination meter

Various adjustments can be made, such as switching units shown on the combination meter.

While the ignition switch is in the "OFF" position, each press of TRIP RESET switch results in items shown in the table below being switched.

| Item | Combination meter display | Possible settings |
|---|---|---|
| A trip | A 888.8 | — |
| B trip | B 555.5 | — |
| Gauge needle sweep function | 1 on | On/Off |
| Changing the unit* | 2 km/h | mile/km |

*: if available

### NOTE

- **If you switch the units on the combination meter, the units on the multi-function display (black and white) also switches accordingly.**
- **If either of the following conditions is met, the combination meter setting mode will be canceled.**
  - **The driver's door is opened.**
  - **The TRIP RESET switch is not operated for approximately 10 seconds or more.**

– CONTINUED –

▽ **Switching method**

1. Push the ignition switch in the “OFF” position.

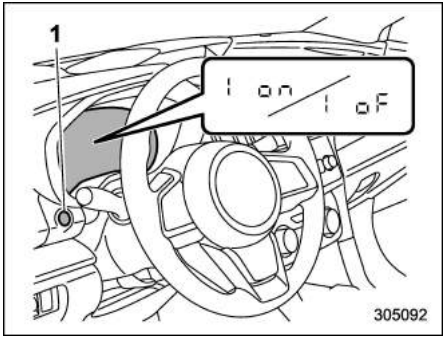


1) TRIP RESET switch

2. Press the TRIP RESET switch repeatedly until the item you want to change is displayed.
3. Press and hold the TRIP RESET switch while the item to be changed is displayed, the setting of the item will be switched.

▼ **Type B combination meter**

Meter and vehicle settings can be set on the combination meter display (color LCD). Refer to “Menu screens” ☞3-42.

## Illumination brightness control

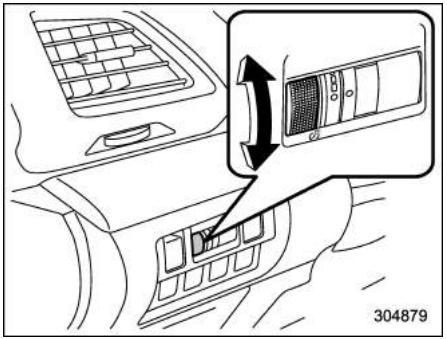


The illumination brightness of the instrument panel dims under the following conditions.

- when the light switch is in the “ ” or “ ” position (except Australia models)
- when the light switch is in the “ ” or “ ” position (Australia models)
- when the light control switch is in the “AUTO” position and the headlights turn on automatically (models with auto on/off headlights: Refer to “Headlights” ☞3-70.)

You can also adjust the illumination brightness for better visibility in the following ways.

To brighten, turn the control dial upward.
To darken, turn the control dial downward.

### NOTE

- **When the control dial is turned fully upward, the illumination brightness becomes the maximum and the automatic dimming function does not work at all.**
- **The brightness setting is not canceled even when the ignition switch is turned to the “LOCK”/“OFF” position.**

### ■ Auto dimmer cancel function (if equipped)

When the ambient light is bright, the illumination brightness is set to the maximum regardless of the position of the control dial. In this case, you cannot adjust the illumination brightness by using the control dial. When the ambient light is dark, you can dim the illumination brightness as described above.

The operational/non-operational setting and sensitivity of the auto dimmer cancel function can be changed by your SUBARU dealer. We recommend that you contact your SUBARU dealer for details.

# Warning and indicator lights

## ■ Initial illumination for system check

Several of the warning and indicator lights illuminate when the ignition switch is initially turned to the “ON” position. This permits checking the operation of the bulbs.

Apply the parking brake and turn the ignition switch to the “ON” position. For the system check, the following lights illuminate and then turn off after several seconds or after the engine has started.

: Seatbelt warning light
(The driver’s seatbelt warning light and the front passenger’s seatbelt warning light turn off only when each seatbelt is fastened.)

: SRS airbag system warning light

: Rear seatbelt indicator light (if equipped)

ON / : Front passenger’s frontal airbag ON indicator (if equipped)

OFF / : Front passenger’s frontal airbag OFF indicator (if equipped)

: Malfunction indicator light (Check Engine light)

: Coolant temperature low indicator light/Coolant temperature high warning light

: Charge warning light

: Oil pressure warning light

: Engine low oil level warning light

: Windshield washer fluid warning light

AT OIL TEMP: AT OIL TEMP warning light

(ABS): ABS warning light

(!): Brake system warning light (red)

(!): Electronic parking brake warning light/ Vacuum pressure system warning light (yellow)

(P): Electronic parking brake indicator light

: Low fuel warning light

: Low tire pressure warning light (if equipped)

AVH: Auto Vehicle Hold ON indicator light

(): Auto Vehicle Hold operation indicator light

: Depress brake indicator light (if equipped)

: Door open warning light

AWD: AWD warning light (AWD models)

: Power steering warning light

: Vehicle Dynamics Control warning light/ Vehicle Dynamics Control operation indicator light

: Vehicle Dynamics Control OFF indicator light

: Automatic headlight beam leveler warning light (models with LED headlights)

: Access key warning light (if equipped)

▲: Upshift indicator (if equipped)

▼: Downshift indicator (if equipped)

: Auto Start Stop warning light/Auto Start Stop OFF indicator light (yellow) (if equipped)

: Auto Start Stop indicator light (green) (if equipped)

: Auto Start Stop No Activity Detected indicator light (if equipped)

: Hill descent control indicator

If any lights fail to illuminate, it indicates a burned-out bulb or a malfunction of the corresponding system.

– CONTINUED –

We recommend that you consult your authorized SUBARU dealer for repair.

## ■ Seatbelt warning light and chime

### NOTE

**If your seatbelt warning device does not operate as described below, it may be malfunctioning. We recommend that you have the device inspected and, if necessary, repaired by the nearest SUBARU dealer.**

#### ▼ Seatbelt warning for driver's seat

Your vehicle is equipped with a seatbelt warning device for the driver's seat.

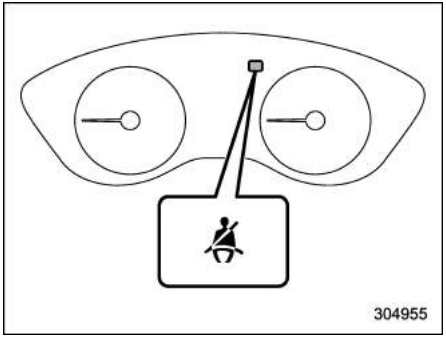


**Driver's warning light**

With the ignition switch turned to the "ON" position, this device reminds the driver to wear the seatbelt by illuminating the seatbelt warning light on the combination meter.

If the vehicle is driven at a speed no higher than approximately 20 km/h (12.5 mph) with the driver's seatbelt not fastened, the warning light will illuminate continuously.

If the vehicle reaches a speed of approximately 20 km/h (12.5 mph) with the driver's seatbelt not fastened, the warning light will flash and the chime will sound. If the seatbelt is fastened at this time, the warning light will turn off and the chime will stop sounding immediately.

This condition will continue for approximately 2 minutes. If the driver's seatbelt is still not fastened when the 2-minute period has elapsed, the warning light will stop flashing and the chime will stop sounding. The warning light, however, will remain illuminated continuously unless the seatbelt is fastened.

#### ▼ Seatbelt warning for front passenger's seat (if equipped)

Your vehicle is equipped with a seatbelt warning device for the front passenger's seat.

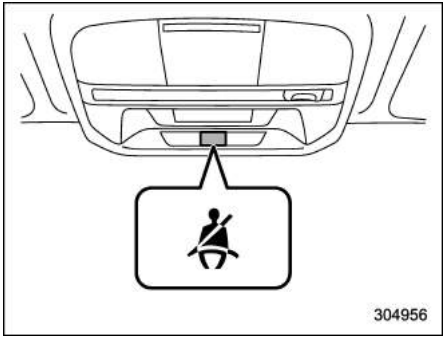


**Front passenger's warning light**

With the ignition switch turned to the "ON" position, this device reminds the front passenger to fasten his/her seatbelt by illuminating a warning light as shown in the illustration.

If the vehicle is driven at a speed no higher than approximately 20 km/h (12.5 mph) with the front passenger's seatbelt not fastened, the warning light(s) corresponding to the unfastened seatbelt(s) will illuminate continuously.

If the vehicle reaches a speed of approximately 20 km/h (12.5 mph) with the front

passenger's seatbelt not fastened, the warning light will flash and the chime will sound.

If the seatbelt is fastened at this time, the warning light will turn off and the chime will stop sounding immediately.

**WARNING**

- **The occupant detection system may not detect a passenger under the following circumstances.**
  - **When cushions, etc., are used**
  - **When a child or small adult is sitting in the seat**
- **Observe the following precautions. Failure to do so may prevent the front passenger's SRS frontal airbag from functioning correctly or cause the system to fail.**
  - **Do not apply any strong impact to the front passenger's seat.**
  - **Do not let rear passengers rest their feet between the front seatback and seat cushion.**
  - **Do not insert objects between the front seatback and seat cushion.**
  - **Do not spill liquid on the front passenger's seat. If liquid is spilled, wipe it off immediately.**
  - **Do not remove or disassemble the front passenger's seat.**
  - **Do not place any objects (shoes, umbrella, etc.) under the front passenger's seat.**

**NOTE**

- **If the driver's and front passenger's seatbelts are not fastened simultaneously (if one seatbelt is fastened significantly earlier or later than the other), the buzzer may sound longer (10 seconds maximum).**
- **The occupant detection system of the front passenger's seat detects if the seat is occupied by a passenger. However, if there is an object on the seat, the seatbelt warning system may be activated even the seat is not occupied.**

If the front passenger's seatbelt is still not fastened when the 2-minute period has elapsed, the warning light will stop flashing and the chime will stop sounding. The warning light, however, will remain illuminated continuously unless the corresponding seatbelt is fastened.

## Rear seatbelt indicator light and chime (Europe and Australia models)

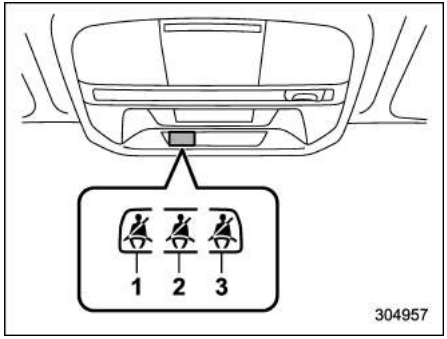


1) Rear seat (left position)
2) Rear seat (center position)
3) Rear seat (right position)

This indicator light is located as shown in the illustration. It illuminates to show only the seating positions in which seatbelts have not been fastened.

**WARNING**

- **The occupant detection system may not detect passenger(s) under the following circumstances.**
  - **When cushions, etc., are used**

– CONTINUED –

- When a child or small adult is sitting in the seat

- Observe the following precautions.
  - Do not apply any strong impact to the rear seat.
  - Do not fold the seatback forward when objects are on the seat.
  - Do not spill liquid on the rear seat. If liquid is spilled, wipe it off immediately.
  - Do not remove or disassemble the rear seat.

## NOTE

**The occupant detection system of the rear seat detects if the seat is occupied by a passenger. However, if there is an object on the seat, the seatbelt warning system may be activated even the seat is not occupied.**

## ■ SRS airbag system warning light

**WARNING**

**If the warning light exhibits any of the following conditions, there may be a malfunction in the seatbelt pretensioners and/or SRS airbag system. We recommend that you have the system checked immediately by your nearest SUBARU dealer. Unless checked and properly repaired, the seatbelt pretensioners and/or SRS airbags will operate improperly (e.g. SRS airbags may inflate in a very minor collision or not inflate in a severe collision), which may increase the risk of injury.**

- **Flashing or flickering of the warning light**
- **No illumination of the warning light when the ignition switch is first turned to the "ON" position**
- **Continuous illumination of the warning light**
- **Illumination of the warning light while driving**

For details about the components monitored by the warning light, refer to "SRS airbag system monitor" ☞1-76.

## ■ Front passenger's frontal airbag ON and OFF indicators (if equipped)

: Front passenger's frontal airbag ON indicator

: Front passenger's frontal airbag OFF indicator

The indicators are located as shown in the illustration. The front passenger's frontal airbag ON and OFF indicators show you the status of the front passenger's SRS frontal airbag.

When the ignition switch is turned to the "ON" position, both the ON and OFF indicators illuminate for 6 seconds during

which time the system is checked. Following the system check, both indicators turn off for 2 seconds. After that, one of the indicators illuminates depending on the status of the front passenger's SRS frontal airbag determined by the frontal airbag system monitoring.

If the front passenger's SRS frontal airbag is activated, the passenger's frontal airbag ON indicator will illuminate while the OFF indicator will remain off.

If the front passenger's SRS frontal airbag is deactivated, the passenger's frontal airbag ON indicator will remain off while the OFF indicator will illuminate.

With the ignition switch turned to the "ON" position, if both the ON and OFF indicators remain illuminated or off simultaneously even after the system check period, the system is malfunctioning. We recommend that you contact your SUBARU dealer immediately for an inspection.

## ■ Malfunction indicator light (Check Engine light)

### ▼ Models equipped with OBD system

Vehicles sold in Europe are equipped with an enhanced on-board diagnostics system called OBD that monitors the performance of the vehicle's emission control system.

Vehicles sold in some countries outside Europe may be equipped with the OBD system. We recommend that you ask your SUBARU dealer to ascertain whether your vehicle has the OBD system.

The OBD system helps to protect the environment by ensuring that emissions are at acceptable levels for the life of the vehicle.

If the malfunction indicator light illuminates steadily or blinks while the engine is running, it may indicate that there is at least one problem or potential problem somewhere in the emission control system and that service is required. The OBD system also assists your service technician in properly diagnosing any malfunction.

**⚠ CAUTION**

**If the malfunction indicator light illuminates while you are driving, we recommend that you have your vehicle checked/repaired by your SUBARU dealer as soon as possible. Continued vehicle operation without having the emission control system checked and repaired as necessary could cause serious damage, which may not be covered by your vehicle's warranty.**

#### ▽ If the light illuminates steadily

If the light illuminates steadily while driving or does not turn off after the engine starts, an emission control system malfunction has been detected.

We recommend that you have your vehicle checked by an authorized SUBARU dealer immediately.

#### ▽ If the light is blinking

If the light is blinking while driving, an engine misfire condition has been detected which may damage the emission control system.

To prevent serious damage to the emission control system, you should do the following.

- Reduce vehicle speed.
- Avoid hard acceleration.
- Avoid steep uphill grades.
- Reduce the amount of cargo, if possible.
- Stop towing a trailer as soon as possible.

The malfunction indicator light may stop blinking and illuminate steadily after sev-

– CONTINUED –

eral driving trips. We recommend that you have your vehicle checked by an authorized SUBARU dealer immediately.

▼ **Models NOT equipped with OBD system**

If the malfunction indicator light illuminates when the engine is running, it may indicate that there is a problem somewhere in the engine control system.

If the light illuminates while driving or does not turn off after the engine starts, we recommend that you contact your nearest SUBARU dealer immediately.

## ■ Coolant temperature low indicator light/ Coolant temperature high warning light

**⚠ CAUTION**

- **After turning the ignition switch to the "ON" position, if this indicator light/warning light behaves under any of the following conditions, the electrical system may be malfunctioning. We recommend that you contact your SUBARU dealer immediately for an inspection.**
  - **It remains blinking in RED.**
  - **It remains illuminated in RED for more than 2 seconds.**
  - **It remains blinking in RED and BLUE alternately.**
- **While driving, if this indicator light/warning light behaves under any of the following conditions, take the specified appropriate measure listed below.**
  - **Blinking or illuminated in RED:**
    **Safely stop the vehicle as soon as possible, and refer to the emergency steps for the engine overheating. Afterward, we recommend that you have the system checked by your nearest SUBARU dealer. Refer to "Engine overheating" ☞9-22.**
  - **Blinking in RED and BLUE alternately:**
    **The electrical system may be malfunctioning. We recommend that you contact your SUBARU dealer for an inspection.**

This coolant temperature low indicator light/coolant temperature high warning light has the following three functions.

- Illumination in **BLUE** indicates insufficient warming up of the engine
- Blinking in **RED** indicates that the engine is close to overheating
- Illumination in **RED** indicates overheating condition of the engine

For the system check, this indicator light/warning light illuminates in **RED** for approximately 2 seconds when the ignition switch is turned to the "ON" position. After that, this indicator light/warning light changes to **BLUE** and maintains illumination in **BLUE**. This **BLUE** illuminated light turns off when the engine is warmed up sufficiently.

If the engine coolant temperature increases over the specified range, the indicator light/warning light blinks in **RED**. At this time, the engine is close to overheating.

If the engine coolant temperature increases further, the indicator light/warning light illuminates in **RED** continuously. At this time, the engine may be overheating.

When the indicator light/warning light blinks in **RED** or illuminates in **RED**, safely stop the vehicle as soon as possible, and refer to the emergency steps for the engine overheating. Refer to "Engine overheating" ☞9-22. Afterward, we recommend

that you have the system checked by your nearest SUBARU dealer.

Also, if the indicator light/warning light often blinks in **RED**, the electrical system may be malfunctioning. We recommend that you contact your SUBARU dealer for an inspection.

## NOTE

**If the engine is restarted after a certain driving condition, this indicator light/ warning light may illuminate in RED. However, this is not a malfunction if the indicator light/warning light turns off after a short time.**

## ■ Charge warning light

If this light illuminates when the engine is running, it may indicate that the charging system is not working properly.

If the light illuminates while driving or does not turn off after the engine starts, stop the engine at the first safe opportunity and check the alternator belt. If the belt is loose, broken or if the belt is in good condition but the light remains illuminated, we recommend that you contact your nearest SUBARU dealer immediately.

## ■ Oil pressure warning light

If this light illuminates when the engine is running, it may indicate that the engine oil pressure is low and the lubricating system is not working properly.

If the light illuminates while driving or does not turn off after the engine starts, stop the engine at the first safe opportunity and check the engine oil level. If the oil level is low, add oil immediately. If the engine oil is at the proper level but the light remains illuminated, we recommend that you contact your nearest SUBARU dealer immediately.

For details about checking the oil level or adding the engine oil, refer to “Engine oil” ☞11-14.

**⚠ CAUTION**

**Do not operate the engine with the oil pressure warning light on. This may cause serious engine damage.**

## ■ Engine low oil level warning light

This light illuminates when the engine oil level decreases to the lower limit.

If the warning light illuminates while driving, park the vehicle in a safe and level location, and then check the engine oil level. When the engine oil level is not within the normal range, refill with engine oil if necessary. Refer to “Engine oil” ☞11-14.

If the warning light does not turn off after refilling the engine oil, or the light illuminates even though the engine oil level is within the normal range, we recommend that you have the vehicle checked by a SUBARU dealer.

## NOTE

**The warning light may stay illuminated when the engine is started straight after topping up or changing the engine oil. In such cases, park the vehicle on a level surface and wait for more than a minute until the oil level settles, after which the warning light will turn off.**

### ▼ Tips

For models with Auto Start Stop system:

- The engine low oil level warning light will not turn off immediately even if you replace or add engine oil. It will turn off after the vehicle starts to move. Depending on the driving conditions and environment where the vehicle is driven, it may take a period of approximately 10 minutes for the light to turn off. If the light has still not

– CONTINUED –

turned off after 15 minutes have elapsed, we recommend that you contact your SUBARU dealer.

- The engine low oil level warning light may illuminate temporarily in the following conditions because a low oil level may be detected as a result of significant oil movement in the engine.
  - when the vehicle is considerably inclined on an uphill or steep slope
  - when the vehicle has continuously accelerated and decelerated
  - when the vehicle is continuously turned
  - when the vehicle is driven on a road that alternates continuously between uphill and downhill

For models without Auto Start Stop system:

- The engine low oil level warning light turns off when the ignition switch is turned to the "LOCK"/"OFF" position. However, after the next time you turn on the engine, if the engine oil level has decreased to the lower limit, the warning light illuminates frequently while the engine is running.
- When the vehicle is considerably inclined on an uphill or steep slope, the warning light may illuminate temporarily due to the movement of engine oil in the engine.

## ■ AT OIL TEMP warning light

AT OIL TEMP

If this light illuminates when the engine is running, it may indicate that the transmission fluid temperature is too hot.

If the light illuminates while driving, immediately stop the vehicle in a safe location and let the engine idle until the warning light turns off.

### ▼ Transmission control system warning

If the "AT OIL TEMP" warning light flashes after the engine has started, it may indicate that the transmission control system is not working properly. We recommend that you contact your nearest SUBARU dealer for service immediately.

## ■ Low tire pressure warning light (if equipped)

When the ignition switch is turned to the "ON" position, the low tire pressure warning light will illuminate for approximately 2 seconds to check that the tire pressure monitoring system (TPMS) is functioning properly. If the system functions normally and the tire pressure of all four wheels is appropriate for the selected TPMS mode, the warning light will turn off. The TPMS mode should be changed according to the specified pressure shown on the tire inflation pressure label. For how to change a mode and information about the mode to be selected, refer to "Tire pressure monitoring system (TPMS)" ☞11-25.

Each tire, including the spare (if provided), should be checked monthly when cold and inflated to the inflation pressure recommended by the vehicle manufacturer on the vehicle placard or tire inflation pressure label. (If your vehicle has tires of a different size than the size indicated on the vehicle placard or tire inflation pressure label, you should determine the proper tire inflation pressure for those tires.)

As an added safety feature, your vehicle has been equipped with a tire pressure monitoring system (TPMS) that illuminates a low tire pressure telltale when one or more of your tires is significantly under-inflated. Accordingly, when the low tire pressure telltale illuminates, you should stop and check your tires as soon as possible, and inflate them to the proper pressure. Driving on a significantly under-inflated tire causes the tire to overheat and can lead to tire failure. Under-inflation also reduces fuel efficiency and tire tread life, and may affect the vehicle's handling and stopping ability.

Please note that the TPMS is not a

substitute for proper tire maintenance, and it is the driver's responsibility to maintain correct tire pressure, even if under-inflation has not reached the level to trigger illumination of the TPMS low tire pressure telltale.

Your vehicle has also been equipped with a TPMS malfunction indicator to indicate when the system is not operating properly. The TPMS malfunction indicator is combined with the low tire pressure telltale. When the system detects a malfunction, the telltale will flash for approximately one minute and then remain continuously illuminated. This sequence will continue upon subsequent vehicle start-ups as long as the malfunction exists. When the malfunction indicator is illuminated, the system may not be able to detect or signal low tire pressure as intended. TPMS malfunctions may occur for a variety of reasons, including the installation of replacement or alternate tires or wheels on the vehicle that prevent the TPMS from functioning properly. Always check the TPMS malfunction telltale after replacing one or more tires or wheels on your vehicle to ensure that the replacement or alternate tires and wheels allow the TPMS to continue to function properly.

Should the warning light illuminate steadily after blinking for approximately one minute, we recommend that you have the system inspected by your nearest SUBARU dealer as soon as possible.

**WARNING**

**If this light does not illuminate briefly after the ignition switch is turned ON or the light illuminates steadily after blinking for approximately one minute, we recommend that you have your Tire Pressure Monitoring System checked at a SUBARU dealer as soon as possible.**

**If this light illuminates while driving, never brake suddenly and keep driving straight ahead while gradually reducing speed. Then slowly pull off the road to a safe place. Otherwise an accident involving serious vehicle damage and serious personal injury could occur.**

**If this light still illuminates while driving after adjusting the tire pressure, a tire may have significant damage and a fast leak that causes the tire to lose air rapidly. If you have a flat tire, replace it with a spare tire as soon as possible.**

**When a spare tire is mounted or a wheel rim is replaced without the original pressure sensor/transmitter being transferred, the Low tire pressure warning light will illuminate steadily after blinking for approximately one minute. This indicates the TPMS is unable to monitor all four road wheels. We recommend that you contact your SUBARU dealer as soon as possible for tire and sensor replacement and/or system resetting.**

**If the light illuminates steadily after blinking for approximately one minute, we recommend that you promptly contact a SUBARU dealer to have the system inspected.**

**CAUTION**

**The tire pressure monitoring system is NOT a substitute for manually checking tire pressure. The tire pressure should be checked periodically (at least monthly) using a tire gauge. Change the TPMS mode according to the specified pressure shown on the tire inflation pressure label. After any change to tire pressure(s), the tire pressure monitoring system will not re-check tire inflation pressures until the vehicle is first driven more than 40 km/h (25**

– CONTINUED –

**mph). After adjusting the tire pressures, increase the vehicle speed to at least 40 km/h (25 mph) to start the TPMS re-checking of the tire inflation pressures. If the tire pressures are now above the severe low pressure threshold, the low tire pressure warning light should turn off a few minutes later. Therefore, be sure to install the specified size for the front and rear tires.**

## ■ ABS warning light

**CAUTION**

- **If any of the following conditions occur, we recommend that you have the ABS system repaired at the first available opportunity by your SUBARU dealer.**
  - **The warning light does not illuminate when the ignition switch is turned to the "ON" position.**
  - **The warning light illuminates when the ignition switch is turned to the "ON" position, but it does not turn off even after the vehicle is started.**
  - **The warning light illuminates during driving.**
- **When the warning light is on (and the brake system warning light is off), the ABS function shuts down. However, the conventional brake system continues to operate normally.**

The ABS warning light, Vehicle Dynamics Control warning light, and brake system warning light illuminate simultaneously if the EBD system malfunctions. For further details of the EBD system malfunction warning, refer to "Electronic Brake Force Distribution (EBD) system warning" ☞3-24.

### NOTE

**If the warning light behavior is as shown in the following, the ABS system may be considered normal.**

- **The warning light illuminates when the ignition switch is turned to the "ON" position and turns off approximately 2 seconds after the engine has started.**
- **The warning light illuminates right after the engine is started but turns off immediately, remaining off.**
- **The warning light remains illuminated after the engine has been started, but it turns off during driving.**
- **The warning light illuminates during driving, but it turns off immediately and remains off.**

When driving with an insufficient battery voltage such as when the engine is jump started, the ABS warning light may illuminate. This is due to the low battery voltage and does not indicate a malfunction. When the battery becomes fully charged, the light will turn off.

## ■ Vehicle Dynamics Control warning light/Vehicle Dynamics Control operation indicator light

### ▼ Vehicle Dynamics Control warning light

**CAUTION**

**The Vehicle Dynamics Control system provides its ABS control through the electrical circuit of the ABS system. Accordingly, if the ABS is inoperative, the Vehicle Dynamics Control system becomes unable to provide ABS control. As a result, the Vehicle Dynamics Control system becomes inoperative, causing the warning light to illuminate. Although**

**both the Vehicle Dynamics Control and ABS systems are inoperative in this case, the ordinary functions of the brake system are still available.**

**You will be safe while driving with this condition, but drive carefully and we recommend that you have your vehicle checked at a SUBARU dealer as soon as possible.**

## NOTE

- **If the electrical circuit of the Vehicle Dynamics Control system itself malfunctions, the warning light only illuminates. At this time, the ABS (Anti-lock Brake System) remains fully operational.**
- **The warning light illuminates when the electronic control system of the ABS/Vehicle Dynamics Control system malfunctions.**
- **The Vehicle Dynamics Control warning light, ABS warning light, and brake system warning light illuminate simultaneously if the EBD system malfunctions. For further details of the EBD system malfunction warning, refer to "Electronic Brake Force Distribution (EBD) system warning" ☞3-24.**

The Vehicle Dynamics Control system is probably inoperative under any of the following conditions. We recommend that you have your vehicle checked at a SUBARU dealer immediately.

- The warning light does not illuminate when the ignition switch is turned to the "ON" position.
- The warning light illuminates while the vehicle is running.

## NOTE

**If the warning light behavior is as described in the following examples, the Vehicle Dynamics Control system may be considered normal.**

- **The warning light illuminates when the ignition switch is turned to the "ON" position and turns off approximately 2 seconds after the engine has started.**
- **The warning light illuminates right after the engine is started but turns off immediately and remains off.**
- **The warning light illuminates after the engine has started and turns off while the vehicle is subsequently being driven.**
- **The warning light illuminates during driving, but turns off immediately and remains off.**
- **The warning light illuminates when the engine has stalled and continues to illuminate after the engine has been restarted. However, it will turn off once the vehicle starts moving.**

### ▼ Vehicle Dynamics Control operation indicator light

The indicator light flashes during activation of the skid suppression function and during activation of the traction control function.

## NOTE

- **The light may remain illuminated for a short period of time after the engine has been started, especially in cold weather. This does not indicate the existence of a problem. The light should turn off as soon as the engine has warmed up.**
- **The indicator light illuminates when the engine has developed a malfunction and the malfunction indicator light/ CHECK ENGINE warning light is on.**

The Vehicle Dynamics Control system is probably malfunctioning under the following condition. We recommend that you have your vehicle checked at a SUBARU dealer as soon as possible.

- The light does not turn off even after the lapse of several minutes (the engine has warmed up) after the engine has started.

– CONTINUED –

## ■ Vehicle Dynamics Control OFF indicator light

The light illuminates when the Vehicle Dynamics Control OFF switch is pressed to deactivate the Vehicle Dynamics Control system.

The Vehicle Dynamics Control system is probably malfunctioning under any of the following conditions. We recommend that you have your vehicle checked at a SUBARU dealer immediately.

- The light does not illuminate when the ignition switch is turned to the “ON” position.
- The light does not turn off even after a period of approximately 2 seconds after the ignition switch has been turned to the “ON” position.

## ■ Brake system warning light (red)

**⚠ WARNING**

- **Driving with the brake system warning light on is dangerous. This indicates your brake system may not be working properly. If the light remains illuminated, we recommend that you have the brakes inspected by a SUBARU dealer immediately.**
- **If at all in doubt about whether the brakes are operating properly, do not drive the vehicle. We recommend that you have your vehicle towed to the nearest SUBARU dealer for repair.**

The brake system warning light has the following functions.

### ▼ Brake fluid level warning

The light illuminates when the brake fluid level has dropped to near the “MIN” level of the brake fluid reservoir with the ignition switch in the “ON” position and with the parking brake fully released.

If the light should illuminate while driving (with the parking brake fully released and with the ignition switch positioned in “ON”), it could be an indication of leaking of brake fluid or worn brake pads. If this occurs, immediately stop the vehicle at the nearest safe location and check the brake fluid level. For details, refer to “Brake fluid” ☞11-22. If the fluid level is below the “MIN” mark in the reservoir, do not drive the vehicle. We recommend that you have the vehicle towed to the nearest SUBARU dealer for repair. For details, refer to “Towing” ☞9-23.

### ▼ Electronic Brake Force Distribution (EBD) system warning

The EBD system may be malfunctioning if the brake system warning light, Vehicle Dynamics Control warning light and ABS warning light illuminate simultaneously during driving.

Even if the EBD system fails, the conventional braking system will still function. However, the rear wheels will be more prone to locking when the brakes are applied harder than usual and the vehicle’s motion may therefore become somewhat harder to control.

If the brake system warning light, Vehicle Dynamics Control warning light and ABS warning light illuminate simultaneously, take the following steps.

1. Stop the vehicle in the nearest safe, flat location.
2. Shut down the engine, apply the parking brake, and then restart it.
3. Fully release the parking brake.
4. Even if all the warning lights do not come back on, the EBD system may have a possible malfunction. Drive carefully to the nearest SUBARU dealer and have the system inspected.
5. If all the warning lights stay illuminated or come back on after approximately 2

seconds, shut down the engine, apply the parking brake and check the brake fluid level. For details, refer to “Brake fluid” ☞11-22.

- If the brake fluid level is not below the “MIN” mark, the EBD system may be malfunctioning. We recommend that you drive carefully to the nearest SUBARU dealer and have the system inspected.
- If the brake fluid level is below the “MIN” mark, DO NOT drive the vehicle. Instead, we recommend that you have the vehicle towed to the nearest SUBARU dealer for repair. For details, refer to “Towing” ☞9-23.

## ■ Electronic parking brake warning light/Vacuum pressure system warning light (yellow)

This light illuminates when the electronic parking brake system is malfunctioning.

**⚠ WARNING**

**When the electronic parking brake warning light illuminates, immediately stop the vehicle in a safe location and we recommend that you contact your SUBARU dealer.**

**NOTE**

- **If the warning light behaves as described in the following conditions, the electronic parking brake system is operating normally.**
  - **– The warning light remains illuminated after the engine is started, but it turns off after the electronic parking brake is released, and the warning light remains off.**
  - **– The warning light illuminates during driving, but it turns off and remains off.**
- **If you start the engine while operating the electronic parking brake switch, the electronic parking brake warning light may illuminate. In this case, restart the engine and then operate the electronic parking brake switch. If the warning light turns off, the system may be considered normal.**

### ▼ Vacuum pressure system warning

The vacuum pressure system warning light will illuminate when the vacuum pressure sensor is malfunctioning or brake booster pressure is decreasing. If the vacuum pressure system warning light continues to illuminate for several minutes after starting the engine, there may be a malfunction in the vacuum system. In this case, drive the vehicle carefully and have the system inspected by a SUBARU dealer.

## ■ Electronic parking brake indicator light

This light illuminates while the electronic parking brake is applied. If you operate the electronic parking brake switch while the electronic parking brake cannot be operated, this light flashes for approximately 10 seconds. When the electronic parking brake system is malfunctioning, this light may flash.

**⚠ WARNING**

- **When the electronic parking brake indicator light continues to flash, the electronic parking brake system may malfunction (excluding when the vehicle was stopped on a steep up/downhill slope, or when the electric parking brake was applied at high brake temperature). Immediately stop the vehicle in a safe location and we recommend that you contact your SUBARU dealer.**
- **When the electronic parking brake indicator light does not turn off even if you release the electronic parking brake while**

– CONTINUED –

**the engine is running, immediately stop the vehicle in a safe location, we recommend that you contact your SUBARU dealer and have the electronic parking brake system inspected.**

## ■ Auto Vehicle Hold ON indicator light

This indicator light illuminates when the Auto Vehicle Hold is activated. For details, refer to “Auto Vehicle Hold function” ☞7-33.

## ■ Auto Vehicle Hold operation indicator light

This indicator light illuminates while the vehicle is stopped by the Auto Vehicle Hold function. For details, refer to “Auto Vehicle Hold function” ☞7-33.

## ■ Depress brake indicator light (if equipped)

This light illuminates if the brake pedal is not depressed in the following conditions.

- The Auto Vehicle Hold switch is pressed to deactivate the Auto Vehicle Hold function while the vehicle is stopped by the Auto Vehicle Hold function.
- The electronic parking brake is released.

## ■ Low fuel warning light

The low fuel warning light illuminates when the tank is nearly empty, at approximately 9.5 liters (2.5 US gal, 2.1 Imp gal). It only operates when the ignition switch is in the “ON” position. When this light illuminates, fill the fuel tank immediately.

**⚠ CAUTION**

**Promptly put fuel in the tank whenever the low fuel warning light illuminates. Engine misfires as a result of an empty tank could cause damage to the engine.**

## ■ Windshield washer fluid warning light

This light illuminates when the fluid level in the windshield washer fluid tank decreases to the lower limit (approximately 0.6 liter, 0.6 US qt, 0.5 Imp qt).

## ■ Engine hood open warning light (if equipped)

The warning light illuminates if the engine hood is not fully closed. This function is effective even if the ignition switch is in the “LOCK”/“OFF” or “ACC” position (all models) or the key is removed from the ignition switch (models without “keyless access with push-button start system”).

Always make sure this light is not illuminated before you start to drive.

## ■ Door open warning light

The warning light illuminates if any door or rear gate is not fully closed. This function is effective even if the ignition switch is in the “LOCK”/“OFF” or “ACC” position, or the key is removed from the ignition switch.

For some models, only the open doors are indicated by the warning lights.

Always make sure this light is not illuminated before you start to drive.

## ■ All-Wheel Drive warning light (AWD models)

**CAUTION**

**Continuing to drive with the AWD warning light flashing can damage the powertrain. If the AWD warning light starts to flash, promptly park in a safe location and check whether the tires have differing diameters and whether any of the tires has an excessively low inflation pressure.**

### NOTE

**If the temporary spare tire is used, the AWD warning light may flash. Use of the temporary spare tire should therefore be restricted to the minimum time necessary. Replace the temporary spare tire with a conventional tire as soon as possible.**

This light flashes if the vehicle is driven with tires of different diameters fitted on its wheels or with the air pressure excessively low in any of its tires.

## ■ Power steering warning light

While the engine is running, this warning light illuminates when a malfunction has been detected in the electric power steering system.

**CAUTION**

**When the power steering warning light is illuminated, there may be more resistance when the steering wheel is operated. We recommend that you drive carefully to the nearest SUBARU dealer and have the vehicle inspected immediately.**

### NOTE

**If the steering wheel is operated in the following ways, the power steering control system may temporarily limit the power assist in order to prevent the system components, such as the control computer and drive motor, from overheating.**

- **The steering wheel is operated frequently and turned sharply while the vehicle is maneuvered at extremely low speeds, such as while frequently turning the steering wheel during parallel parking.**
- **The steering wheel remains in the fully turned position for a long period of time.**

**At this time, there will be more resistance when steering. However this is not a malfunction. Normal steering force will be restored after the steering wheel is not operated for a while and the power steering control system has an opportunity to cool down. However, if the power steering is operated in a non-standard way which causes power assist limitation to occur too frequently, this may result in a malfunction of the power steering control system.**

## ■ Automatic headlight beam leveler warning light (models with LED headlights)

This light illuminates when the automatic headlight beam leveler does not operate normally.

If this light illuminates while driving, we recommend that you have your vehicle inspected at your SUBARU dealer.

– CONTINUED –

## ■ LED headlight warning light (models with LED headlights)

This light illuminates if the LED headlights malfunction. We recommend that you have your vehicle inspected at a SUBARU dealer as soon as possible.

## ■ Steering Responsive Headlight warning light/ Steering Responsive Headlight OFF indicator light (if equipped)

SRH OFF

This light illuminates when the Steering Responsive Headlight OFF switch is pressed to deactivate the Steering Responsive Headlight. Also, the light flashes when a malfunction occurs in the Steering Responsive Headlight. Refer to "Steering Responsive Headlight (SRH)" ☞3-77.

## ■ Vehicle speed warning light (if equipped)

120 km/h

The vehicle speed warning light blinks when your vehicle speed exceeds approximately 120 km/h (75 mph) .

## ■ Warning chimes and warning light of the keyless access with push-button start system (if equipped)

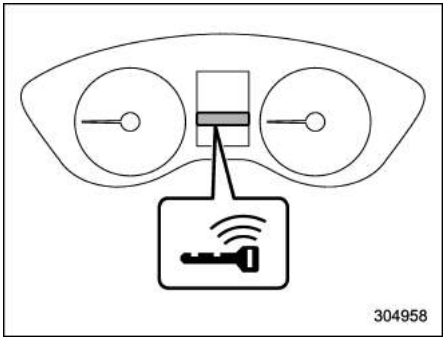


**Access key warning light (type B)**

The keyless access with push-button start system sounds a warning chime and flashes the access key warning light on the combination meter in order to minimize improper operations and help protect your vehicle from theft.

When the warning chime sounds and/or the warning light flashes, take the appropriate action.

**⚠ WARNING**

**Never drive the vehicle if the indicator on the push-button ignition switch is flashing in green when starting the engine. This indicates the status that the steering wheel is not released and could result in an accident involving serious injury or death.**

**⚠ CAUTION**

- **When starting the engine again after the operation indicator on the push-button ignition switch flashes in green, if the operation indicator is still flashing in green, there could be a steering lock malfunction. We recommend that you contact your SUBARU dealer as soon as possible.**
- **When the operation indicator on the push-button ignition switch flashes in orange, we recommend that you contact a SUBARU dealer immediately.**

## NOTE

- Even when the access key fob is within the operating ranges inside the vehicle, the access key warning for engine start may be provided depending on the status of the access key fob and the environmental conditions.
- When the access key fob is taken out of the vehicle through an open window, the access key fob takeout warning or passenger access key fob takeout warning will not be provided.

– CONTINUED –

## ▼ List of warnings

| Inside warning chime | Outside warning chime | Operation indicator on push-button ignition switch | Status | Action |
|---|---|---|---|---|
| Ding, ding ... (intermittent) | — | — | The driver's door was opened while the push-button ignition switch is "ACC" (when the select lever is in the "P" position). | Switch the push-button ignition switch to "OFF", or close the driver's door.<br>*When exiting the vehicle, be sure to switch the push-button ignition switch to "OFF". |
| | | | The push-button ignition switch was switched to "OFF" while the driver's door is open. | Close the driver's door. |
| Ding | Short beep (2 seconds) | — | **Lockout warning:**<br>An attempt was made to lock all doors while the access key fob is left inside the vehicle. | Take out the access key fob from the vehicle, and lock the doors.<br>*The doors cannot be locked while the access key fob is inside the vehicle.<br>*A chirp sound will be heard, and all doors will be unlocked. |
| — | Short beep (2 seconds) | — | **Access key lock-in warning:**<br>The door lock sensor was touched while the push-button ignition switch is "OFF" and the access key fob is inside the vehicle. | Take out the access key fob from the vehicle, and lock the doors.<br>*If the access key fob is inside the vehicle, the doors cannot be locked. |
| — | Beep, beep ... (5 beeps) | — | **Door ajar warning:**<br>The door lock sensor is touched while the push-button ignition switch is in the "OFF" position and one of the doors including the rear gate is opened. | Close the doors securely and lock them.<br>*If one of the doors including the rear gate is opened, the doors cannot be locked. |

| Inside warning chime | Outside warning chime | Operation indicator on push-button ignition switch | Status | Action |
|---|---|---|---|---|
| Ding | Long beep (60 seconds max.) | — | **Power warning:**<br>The door lock sensor was touched while carrying the access key fob and the push-button ignition switch is in a position other than “OFF” (when the select lever is in the “P” position). | Return the access key fob inside the vehicle, or switch the push-button ignition switch to “OFF”.<br>*If the push-button ignition switch is not switched to “OFF”, the doors cannot be locked. |
| Ding, ding ... (7 seconds) | — | — | **Access key warning:**<br>The vehicle was driven while the access key fob is not inside the vehicle. | Carry the access key fob, and drive the vehicle. |
| Ding | — | — | **Access key warning for engine start:**<br>The push-button ignition switch was pressed while the access key fob is not inside the vehicle. | Carry the access key fob, and press the push-button ignition switch. |
| Ding | Beep, beep, beep (3 beeps) | — | **Access key takeout warning:**<br>The driver exited the vehicle with the access key fob and closed the driver’s door while the push-button ignition switch is in a position other than “OFF” (when the select lever is in the “P” position). | Switch the push-button ignition switch to “OFF”, and get out of the vehicle. |
| Ding | Beep, beep, beep (3 beeps) | — | **Passenger access key takeout warning:**<br>A fellow passenger exited the vehicle with the access key fob and closed a door other than the driver’s door while the push-button ignition switch is in a position other than “OFF”. | Return the access key fob to inside the vehicle, or switch the push-button ignition switch to “OFF”. |

– CONTINUED –

| Inside warning chime | Outside warning chime | Operation indicator on push-button ignition switch | Status | Action |
|---|---|---|---|---|
| Long beep (continuous) | Long beep (continuous) | — | The driver exited the vehicle with the access key fob and closed the driver's door while the push-button ignition switch is in a position other than "OFF" and the select lever is in a position other than the "P" position. | Shift the select lever to the "P" position, switch the push-button ignition switch to "OFF" (all models) and exit the vehicle. |
| Long beep (continuous) | — | — | **Select lever position warning:** The driver's door was opened while the push-button ignition switch is in a position other than "OFF" and the select lever is in a position other than the "P" position. | Shift the select lever to the "P" position, switch the push-button ignition switch to "OFF" and exit the vehicle. |
| Long beep (continuous) | — | — | **Select lever position warning:** The engine is turned off by pressing the push-button ignition switch while the select lever is in a position other than the "P" position. | Shift the select lever to the "P" position or start the engine. |
| Ding | — | — | The battery of the access key fob is low. | Replace the battery of the access key fob. |
| Ding | — | Flashes in green (15 seconds max.) | **Steering lock warning:** The engine start procedure was performed, but the steering is still locked. | While turning the steering wheel right and left lightly, depress the brake pedal and press the push-button ignition switch. |
| Ding | — | Flashes in orange | **System malfunction warning:** A malfunction was detected in the power system or steering lock. | We recommend that you contact a SUBARU dealer immediately and have the vehicle inspected. |

## ■ Immobilizer indicator light

This light begins flashing under any of the following conditions.

**For models with "keyless access with push-button start system":**

- Immediately after the push-button ignition switch is turned to the "OFF" position.
- Immediately after the driver's door is opened or closed when all of the following conditions are met.
  - The push-button ignition switch is in the "ON" or "ACC" position.
  - The engine is not running.

In the event that the push-button ignition switch is pressed to turn it on or to start the engine carrying an unauthorized key (for example, the key is unregistered or the ID code does not match), the power is not switched to "ON" and the immobilizer indicator light continues blinking.

**For models without "keyless access with push-button start system":**

- Immediately after the key is pulled out.
- Approximately 60 seconds after the ignition switch is turned from the "ON" position to the "ACC" or "LOCK" position.

If the indicator light does not blink in the above conditions, it may indicate that immobilizer system may be malfunctioning. We recommend that you contact your nearest SUBARU dealer immediately.

In the event that an unauthorized key (for example, an unauthorized duplicate) is used to start the engine, the immobilizer indicator light illuminates. For details about the immobilizer system, refer to "Immobilizer" ☞2-14.

### NOTE

- **The immobilizer indicator light remains off in the following conditions. It means that the matching of the ID code is completed and the immobilizer system is deactivated, and it does not indicate a malfunction.**

  **Models with "keyless access with push-button start system":**
  **– while the engine is running**
  **– the push-button ignition switch has been turned to the "ON" or "ACC" position and the driver's door has not been opened or closed**

  **Models without "keyless access with push-button start system":**
  **– while the engine is running**
  **– when the ignition switch is in the "ON" position**
  **– for approximately 60 seconds after the ignition switch is turned from the "ON" position to the "ACC" or "LOCK" position**

- **Even if a malfunction occurs, such as the immobilizer indicator light flashes irregularly, it will not affect the functionality of the immobilizer system.**

## ■ Select lever/gear position indicator

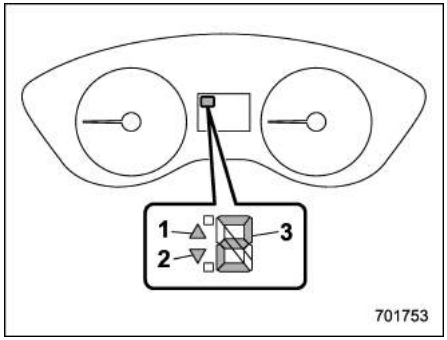


**Type A**
1) Upshift indicator
2) Downshift indicator
3) Gear position indicator

– CONTINUED –

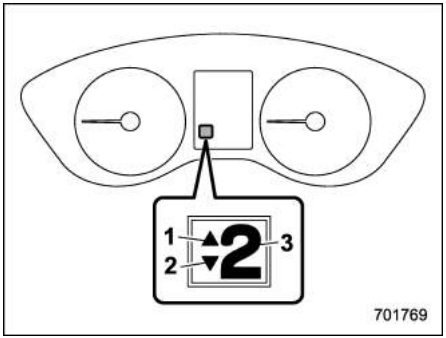


**Type B**
1) Upshift indicator
2) Downshift indicator
3) Gear position indicator

This indicator shows the position of the select lever.

When the manual mode (if equipped) is selected, the gear position indicator (which shows the current gear selection) and the upshift/downshift indicator light up. Refer to “Selection of manual mode” ☞7-14.

▼ **Gear shift indicator (if equipped)**

When shifting up is recommended for good fuel economy, the upshift indicator blinks.

When shifting down is recommended, the downshift indicator blinks.

## NOTE

- **The gear shift indicator cannot be deactivated.**
- **Usually, the gear shift indicator is guideline for driving more fuel-efficiency and it also may operate to prevent a possible engine stall at low engine speed.**
- **Also, the gear shift indicator operates to prevent engine damage at high engine speed.**

## ■ Turn signal indicator lights

These lights show the operation of the turn signal or lane change signal.

If the indicator lights do not blink or blink rapidly, the turn signal bulb may be burned out. Replace the bulb as soon as possible. Refer to “Front turn signal light and position light (models with halogen headlights)” ☞11-44, “Side turn signal light” ☞11-47 or “Rear combination lights” ☞11-47.

## ■ High beam indicator light

This light shows that the headlights are in the high beam mode.

This indicator light also illuminates when the headlight flasher is operated.

## ■ High Beam Assist indicator light (green) (if equipped)

This light illuminates when the High Beam Assist function is activated. For details about the High Beam Assist function, refer to “High Beam Assist function” ☞3-73.

## ■ High Beam Assist warning indicator (yellow) (if equipped)

This warning indicator appears when the High Beam Assist function malfunctions. When this warning indicator appears, we recommend that you have your vehicle inspected by your SUBARU dealer.

## ■ Cruise control indicator light (if equipped)

This light illuminates when the cruise control main button is pressed to activate the cruise control function. For details, refer to “To set cruise control” ☞7-44.

If this light blinks, do not use the cruise control. In addition, if it blinks frequently, we recommend that you contact your SUBARU dealer for an inspection.

**CAUTION**

**If the malfunction indicator light "" illuminates, the cruise control indicator light flashes at the same time. At this time, avoid driving at high speed. We recommend that you have your vehicle inspected at a SUBARU dealer as soon as possible.**

## NOTE

**After the engine has started, if this indicator light does not illuminate even when you press the cruise control main button, the cruise control system may not operate properly. We recommend that you have your vehicle checked by your SUBARU dealer.**

## ■ Cruise control set indicator light (if equipped)

This light illuminates when vehicle speed has been set to use the cruise control function. For details, refer to "To set cruise control" ☞7-44.

## ■ Headlight indicator light

This indicator light illuminates under the following conditions.

- When the light switch is turned to the "" or "" position (except Australia models)
- When the light switch is in the "" or "" position (Australia models)
- When the light control switch is in the "AUTO" position and the headlights illuminate automatically (models with auto on/off headlights)

## ■ Front fog light indicator light (if equipped)

This indicator light illuminates while the front fog lights are illuminated.

## ■ Rear fog light indicator light (if equipped)

This indicator light illuminates while the rear fog light is illuminated.

## ■ Auto Start Stop warning light/Auto Start Stop OFF indicator light (yellow) (if equipped)

### ▼ Auto Start Stop warning light (yellow)

**CAUTION**

- **If the Auto Start Stop warning light is flashing in yellow, there may be a malfunction in the Auto Start Stop system. We recommend that you have your vehicle inspected at a SUBARU authorized dealer as soon as possible.**
- **If the Auto Start Stop warning light is illuminated in yellow at any time other than in the following cases, and will not turn off even if the Auto Start Stop OFF switch is pushed and held, we recommend that you have your vehicle inspected at a SUBARU dealer as soon as possible.**

The Auto Start Stop warning light will illuminate in yellow if you open the engine hood when the engine has been temporarily stopped by the Auto Start Stop system. In this case, to ensure safety, the engine

– CONTINUED –

will not be automatically restarted, even if you release the brake pedal. Use normal operation to restart the engine.

▼ **Auto Start Stop OFF indicator light (yellow)**

This light will illuminate in yellow when the Auto Start Stop OFF switch is pressed to prevent the Auto Start Stop system from operating. It will turn off when the Auto Start Stop OFF switch is pressed once more to enable operation of the Auto Start Stop system.

## ■ Auto Start Stop indicator light (green) (if equipped)

This indicator light illuminates when the engine has been temporarily stopped by the Auto Start Stop system. It will turn off when the engine is restarted.

## ■ Auto Start Stop No Activity Detected indicator light (if equipped)

When a vehicle is stopped, the indicator light illuminates when the operating condition of idling stop are not meet. The light will turn off when the vehicle starts driving.

## ■ X-MODE indicator

This indicator appears while the X-MODE is activated. It will disappear when the X-MODE is deactivated. Refer to “To activate/deactivate the X-MODE” ☞7-28.

## ■ Hill descent control indicator

This indicator appears while the hill descent control function is in standby. It will flash while the hill descent control function is operating. It will disappear when the hill descent control function is not available. Refer to “Hill descent control function” ☞7-29.

## ■ SUBARU Rear Vehicle Detection warning indicator (if equipped)

This warning indicator appears when the SUBARU Rear Vehicle Detection (SRVD) is malfunctioning. When this indicator appears, we recommend that you have your vehicle inspected by your SUBARU dealer as soon as possible.

## ■ SUBARU Rear Vehicle Detection OFF indicator (if equipped)

The indicator appears when the SUBARU Rear Vehicle Detection (SRVD) OFF switch is pressed to deactivate the SUBARU Rear Vehicle Detection (SRVD) or when the SUBARU Rear Vehicle Detection (SRVD) is suspended temporarily. In this case the SUBARU Rear Vehicle Detection (SRVD) OFF indicator will be shown on the combination meter display (color LCD). For details, refer to “SRVD OFF switch” ☞7-60.

## ■ RAB warning indicator (if equipped)

This indicator illuminates if the Reverse Automatic Braking System malfunctions. Refer to “Reverse Automatic Braking System” ☞7-61.

## ■ RAB OFF indicator (if equipped)

This indicator illuminates when the Reverse Automatic Braking System is turned OFF, or when the Reverse Automatic Braking System is suspended temporarily. Refer to “Reverse Automatic Braking System” ☞7-61.

## ■ Icy road surface warning indicator (if equipped)

When the outside temperature is 3°C (37°F) or less, the icy road surface warning indicator will illuminate to inform the driver that the road surface may be frozen.

### NOTE

- **The outside temperature indicator shows the temperature in the area around the sensor. Therefore, the temperature indication may differ from the actual outside air temperature.**
- **Treat the icy road surface warning indicator only as a guide. Be sure to check the condition of the road surface before driving.**
- **Once the icy road surface warning indicator appears, it will not disappear unless the outside temperature has increased to 5°C (41°F) or higher.**

## Combination meter display (color LCD) (if equipped)

**⚠ WARNING**

**Always pay adequate attention to safe driving when operating the combination meter display (color LCD) while the vehicle is in motion. When operation of the combination meter display (color LCD) interferes with your ability to concentrate on driving, stop the vehicle before performing operations on the screen. Also, do not concentrate on the display while driving. Doing so may cause you to look away from the road and could result in an accident.**

Various information will be shown on the combination meter display (color LCD). Also, a warning message will appear on the display if a malfunction, etc. is detected. In addition, several settings for the displayed content can be performed.

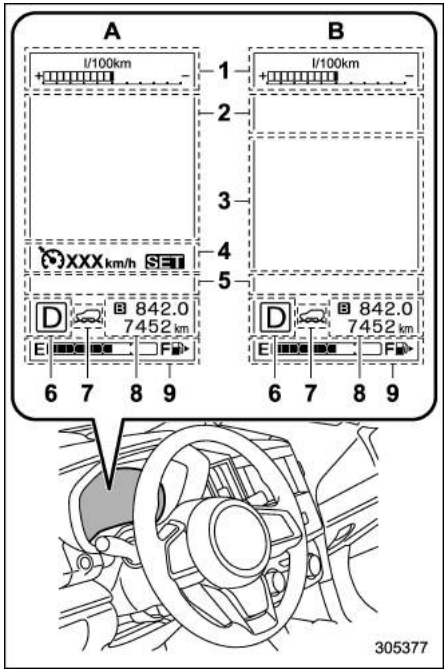


**Combination meter display (color LCD)**

1) ECO gauge
2) Warning screen (refer to "Warning screen" ☞3-39.)/Basic screen (refer to "Basic screens" ☞3-40.)
3) EyeSight screen
4) Cruise control information screen
5) Telltale screen

– CONTINUED –

6) Select lever/gear position indicator (refer to “Select lever/gear position indicator” ☞3-33.)
7) X-MODE indicator (refer to “X-MODE indicator” ☞3-36.)
8) Odometer (refer to “Odometer” ☞3-9.)/ double trip meter (refer to “Double trip meter” ☞3-10.)
9) Fuel gauge (refer to “Fuel gauge” ☞3-10.)

A: Deactivating the EyeSight system or models without the EyeSight system

B: Activating the EyeSight system

## ■ Basic operation

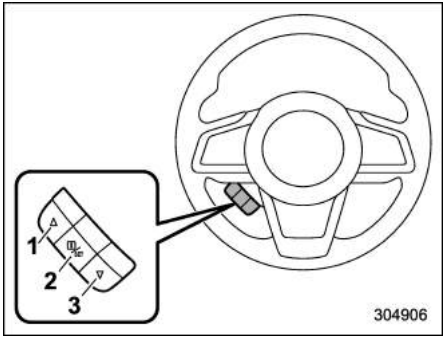


**Control switch**

1) ▲ (Up)
2) i/SET (enter)
3) ▼ (Down)

By operating “▲” or “▼” of the control switch, the screens and selection items can be switched. When the “i/SET” switch is pulled toward you, the item can be selected and set.

If there are some useful messages, such as vehicle information, warning information, etc., they will interrupt the current screen, and appear on the display accompanied by a beep. If such a screen is displayed, take proper action according to the message shown on the screen.

The warning screen will return to the original screen after a few seconds. While the “i” information reminder is shown on the display, it may be possible to display the warning screen again. To recall the message marked with “i” on the display, pull the “i/SET” switch on the steering wheel toward you.

### NOTE

**When the multi-function display (color LCD) is set to the setting screen, the combination meter display (color LCD) cannot be controlled pressing on the “▲”, “▼” and “i/SET” on the control switch.**

## ■ Welcome screen (opening animation) and Good-bye screen (ending animation)

When the driver’s door is opened and closed after unlocking the door, the welcome screen (opening animation) will appear on the combination meter display (color LCD) for approximately 20 seconds.

When the ignition switch is turned to the “LOCK”/“OFF” position, the combination meter display (color LCD) gradually turns off with showing Good-bye screen (ending animation).

### NOTE

- **The welcome screen and the good-bye screen may differ in the actual words and appearance.**
- **Once the welcome screen appears, it takes a certain period of time to display it again.**
- **If the ignition switch is operated after unlocking the driver’s door, the welcome screen will not appear even when the driver’s door is opened and closed.**
- **The welcome screen will disappear when you lock the driver’s door by using the remote keyless entry system (all models) or the keyless access function (if equipped) while the welcome screen is displayed.**

- **The welcome screen including the multi-function display (color LCD) (if equipped) and the audio/navigation unit can be set to on or off. For details, refer to "Welcome Screen" ☞3-42.**

## ■ Warning screen

**Example of warning**

If there is a warning message or a maintenance notification, it will appear for approximately 5 seconds. Take the appropriate actions based on the messages indicated.

## ■ Telltale screen

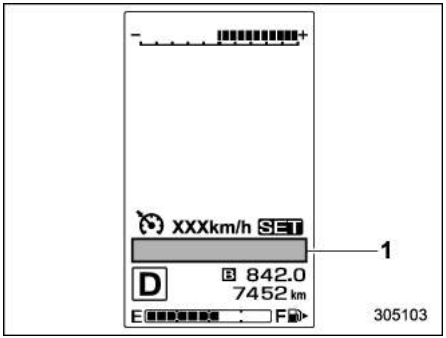


1) Telltale screen

When the corresponding situation occurs, the following telltales will be displayed on the telltale screen.

### NOTE

**When there is warning information to display, it will be displayed in five warning indicators, starting on the left in ascending order of severity. If there are six or more warning information, pull the "i/SET" switch and check the item.**

| Mark | Name | Page |
|---|---|---|
| | Door open warning light | 3-26 |
| | Engine hood open warning light (if equipped) | 3-26 |
| | LED headlight warning indicator (if equipped) | 3-28 |
| | High beam assist indicator (green) (if equipped) | 3-34 |
| SRH OFF | Steering Responsive Headlight warning light/ Steering Responsive Headlight OFF indicator light (if equipped) | 3-28 |
| | Engine low oil level warning indicator | 3-19 |
| RAB | RAB warning indicator (if equipped) | 3-36 |
| RAB OFF | RAB OFF indicator (if equipped) | 3-36 |
| | SUBARU Rear Vehicle Detection warning indicator (if equipped) | 3-36 |
| OFF | SUBARU Rear Vehicle Detection OFF indicator (if equipped) | 3-36 |

– CONTINUED –

| Mark | Name | Page |
|---|---|---|
| | Auto Start Stop warning indicator/Auto Start Stop OFF indicator (yellow) (if equipped) | 3-35 |
| | Auto start stop No Activity Detected indicator (if equipped) | 3-36 |
| | Automatic headlight beam leveler warning (models with LED headlights) | 3-27 |
| | High beam assist warning indicator (yellow) (if equipped) | 3-34 |
| | Windshield washer fluid warning light | 3-26 |
| | Auto Start Stop indicator (green) (if equipped) | 3-36 |
| | Hill descent control indicator | 3-36 |
| | Icy road surface warning indicator | 3-37 |

## ■ Basic screens

By operating the "▲" or "▼" switch on the steering wheel, you can change the screen that is always displayed.

**Average fuel consumption screen:**

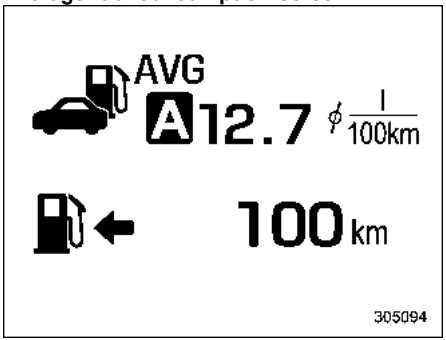


: Average fuel consumption
: Driving range on remaining fuel

This screen displays the average rate of fuel consumption since the trip meter was last reset.

### NOTE

**The driving range on remaining fuel is only a guide. The indicated value may differ from the actual driving range on remaining fuel, so you must immediately fill the tank when the low fuel warning light illuminates.**

**Current fuel consumption screen:**

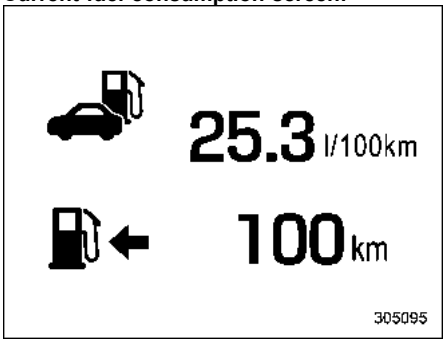


: Current fuel consumption
: Driving range on remaining fuel

This screen displays the rate of fuel consumption at the present moment.

### NOTE

**The driving range on remaining fuel is only a guide. The indicated value may differ from the actual driving range on remaining fuel, so you must immediately fill the tank when the low fuel warning light illuminates.**

**Driving information screen:**

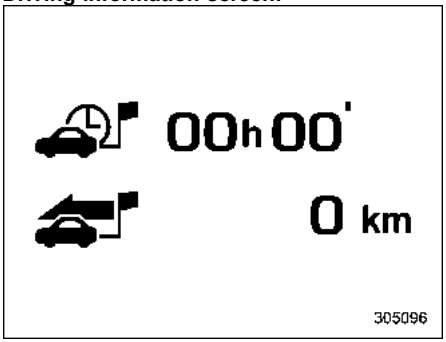


: Journey time
: Journey distance

This screen displays the journey time (the time that has elapsed since the ignition switch was turned to the “ON” position) and journey distance (the distance that has been driven since the ignition switch was turned to the “ON” position).

**Digital speed screen:**

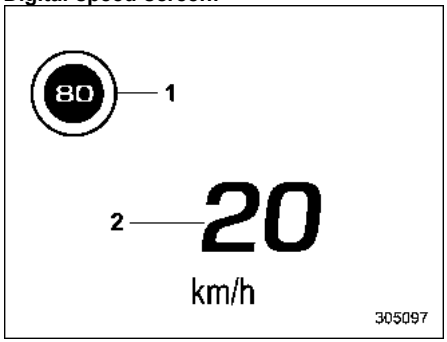


1) Speed limit indicator (if equipped)
2) Vehicle speed

This screen displays the current vehicle speed.

**Auto Start Stop screen (if equipped):**

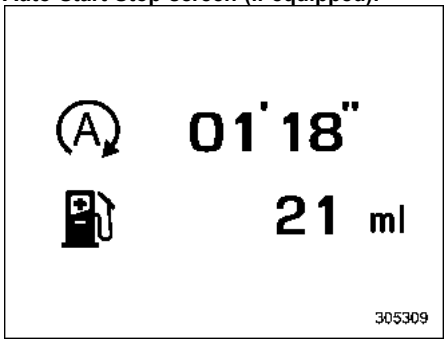


: The total amount of time that the engine was stopped by means of the Auto Start Stop system
: The total amount of fuel saved due to the engine being stopped by the Auto Start Stop system

The indicated values are calculated from the most recent reset of the currently displayed trip meter to the current time. The indication ranges are as follows.

- Total amount of time: from 00’00” to 9999h59’59”
- Total amount of fuel saved: from 0 ml to 9999.999 L

– CONTINUED –

## NOTE

- **When the trip meter is reset, the corresponding accumulated time and the amount of fuel saving are also reset.**
- **The time spent with the engine stopped by means of the Auto Start Stop system is also added to the journey time.**

**TPMS screen (if equipped):**

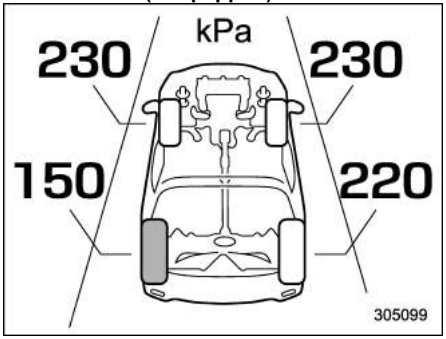


This screen displays each tire pressure. When a tire is deflated, the deflated tire and the tire pressure will be displayed on the screen in yellow.

## NOTE

**The tire pressure values are displayed several minutes after driving.**

**Menu screen entering screen:**

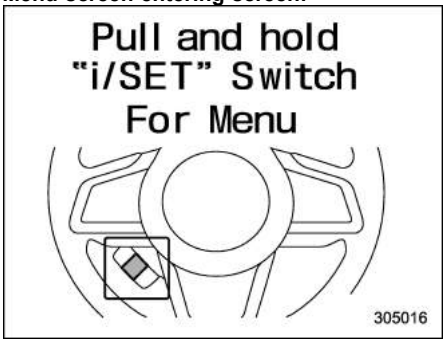


While this screen is selected, pull and hold the "i/SET" switch to enter the menu screen.

## ■ Menu screens

Pull and hold the "i/SET" switch to enter the menu screens when all of the following conditions are satisfied.

- The menu screen entering screen is selected.
- The "i" information reminder is off.

## NOTE

- **While driving, the setting items available on the combination meter display (color LCD) are limited.**
- **For function settings and adjustments on the combination meter display, refer to "Function settings and adjustments on the type B combination meter display (color LCD)" ☞25.**

By operating the "▲" or "▼" switch on the steering wheel, you can select the menu. Pull the "i/SET" switch to enter the selected menu.

## NOTE

**If you enter the "Go Back" menu, the system will return to the previous screen.**

### ▼ Screen Settings

After entering the "Screen Settings" menu, select one of the following menus.

#### ▽ Welcome Screen

The welcome screen can be activated or deactivated.

#### ▽ Good-bye Screen

The good-bye screen can be activated or deactivated.

#### ▽ Gauge Initial Movement

The movement of the meter needles and gauge needles that occurs when the ignition switch is turned to the "ON" position can be activated or deactivated.

▽ **Units**

Changes the units displayed in the combination meter display (color LCD), type A multi-function display (black and white) and type B multi-function display (color LCD).

▽ **Tire Pressure Units (if equipped)**

Changes the units displayed in the Tire Pressure Monitoring system.

▽ **Languages**

Changes the language displayed in the combination meter display (color LCD) and multi-function display (color LCD).

▼ **Warning Volume (if equipped)**

Sets the EyeSight warning volume, RAB warning volume, and SRVD warning volume.

▼ **EyeSight (models with EyeSight system)**

## NOTE

**For models with the EyeSight system, refer to the Owner's Manual supplement for the EyeSight system.**

▼ **RAB (if equipped)**

Sets the Sonar Audible Alarm on/off setting and the Reverse Automatic Braking system on/off setting.

## NOTE

**For models with Reverse Automatic Braking system, refer to "Reverse Automatic Braking System" ☞7-61.**

▽ **Sonar Audible Alarm**

When the Reverse Automatic Braking system is in operation, the warning sound to notify that an obstacle is detected in the rear can be activated or deactivated.

▽ **Automatic Braking**

Sets the RAB system on or off.

▼ **Vehicle Setting**

After entering the "Vehicle Setting" menu, select one of the following menus.

▽ **Keyless Entry System**

Sets the settings used when the keyless access function was operated.

- Hazard Warning Flasher:

Sets the operation of the hazard warning flasher that blinks when the door is locked or unlocked.

- Security Relocking (if equipped):

The automatic locking operation period can be set or customized. Select the preferred seconds to customize the operation period.

▽ **Defogger**

Sets and customizes the operation of the defogger.

▽ **Interior Light**

Sets and customizes the interior light off delay.

▽ **One-touch lane changer**

Sets the one-touch lane changer on/off.

▼ **Default Settings**

Select "Yes" to use the menu screen to restore customized settings to the factory default settings. Select "No" to return to the previous screen without restoring to the factory default settings.

# Multi-function display (black and white) (if equipped)

## NOTE

**For models with multi-function display (color LCD), refer to "Type B multi-function display (color LCD)" ☞3-67.**

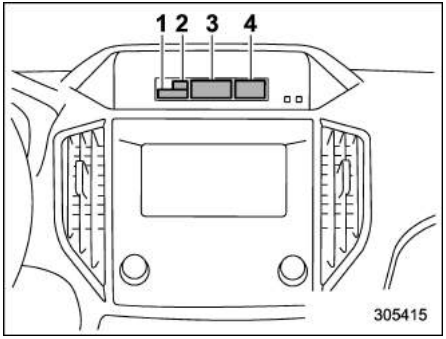


1) Outside temperature indicator
2) X-MODE indicator
3) Driving information display
4) Clock

With the ignition switch in the "ACC" position, the clock appears on the display.

With the ignition switch in the "ON" position, the outside temperature indicator, driving information display and clock all appear on the display.

## NOTE

**The indicated values vary in accordance with changes in the vehicle's running conditions. Also, the indicated values may differ slightly from the actual values and should therefore be treated only as a guide.**

## ■ Driving information display

## NOTE

**You can set the units for both the multi-function display (black and white) and the combination meter at the same time. For details about setting the language and units, refer to "Type A combination meter" ☞3-11 or "Menu screens" ☞3-42.**

### ▼ How to change the information display

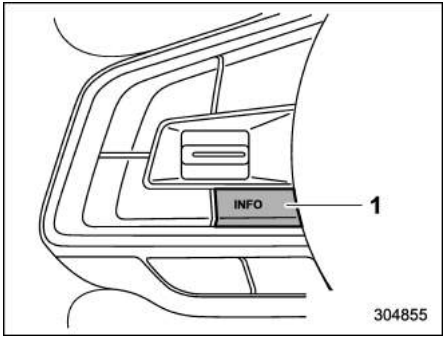


1) INFO button

Pressing the INFO button on the steering wheel switches the display in the following sequence.

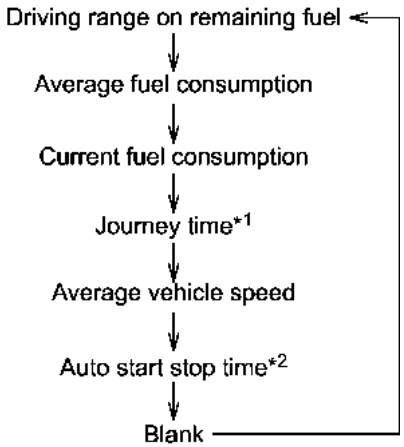


*1: Models without combination meter display (color LCD)

*2: if equipped

### ▼ Driving range on remaining fuel

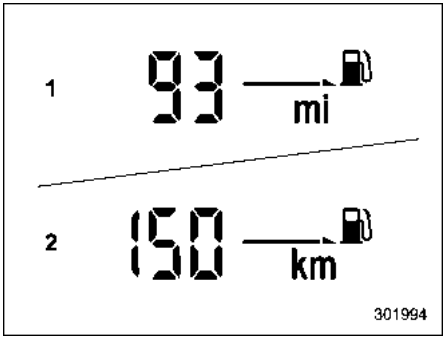


1) When setting the displayed unit as MPH
2) When setting the displayed unit as km/h

The driving range indicates the distance that can be driven taking into account the amount of fuel remaining in the tank and the average rate of fuel consumption.

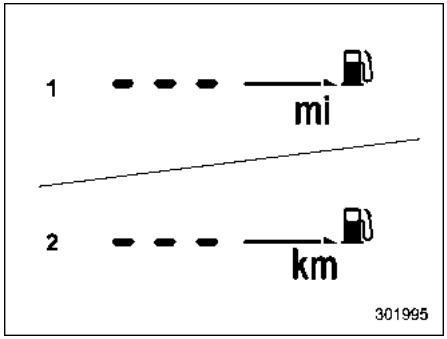


1) When setting the displayed unit as MPH
2) When setting the displayed unit as km/h

If the driving range is shown as "- - -", there is only a tiny amount of fuel left in the tank.

## NOTE

**The driving range on remaining fuel is only a guide. The indicated value may differ from the actual driving range on remaining fuel, so you must immediately fill the tank when the low fuel warning light illuminates.**

– CONTINUED –

### ▼ Average fuel consumption

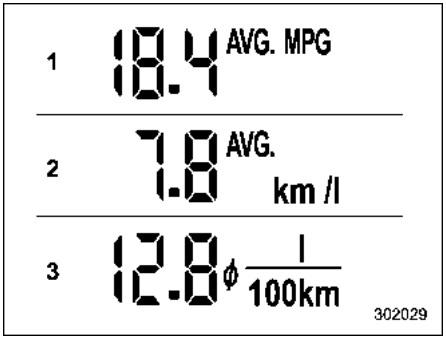


1) Displays the driving range per gallon of fuel
2) Displays the driving range per liter of fuel
3) Displays the fuel consumption per 100 km

This display shows the average rate of fuel consumption since the trip meter was last reset.

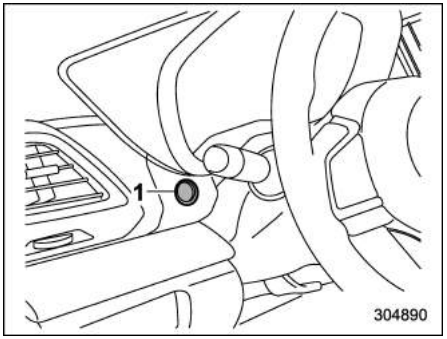


1) TRIP RESET switch

Press the TRIP RESET switch to switch between the displays for the average fuel consumption that corresponds to the A trip meter mileage and the average fuel consumption that corresponds to the B trip meter mileage.

When the trip meter mileage is reset, the corresponding average fuel consumption value is also reset.

## NOTE

**When the trip meter mileage is reset, the average fuel consumption corresponding to that trip meter is not shown until the vehicle has subsequently covered a distance of 1 km (or 1 mile).**

### ▼ Current fuel consumption

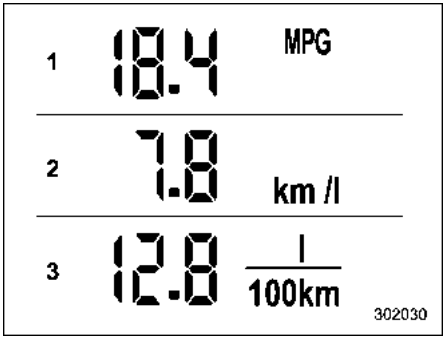


1) Displays the driving range per gallon of fuel
2) Displays the driving range per liter of fuel
3) Displays the fuel consumption per 100 km

This display shows the rate of fuel consumption at the present moment.

▼ **Journey time (models without combination meter display (color LCD))**

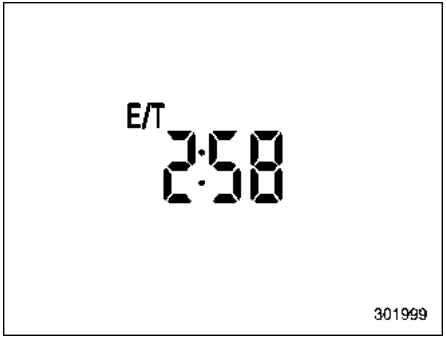


The journey time shows the time that has elapsed since the ignition switch was turned to the “START” position.

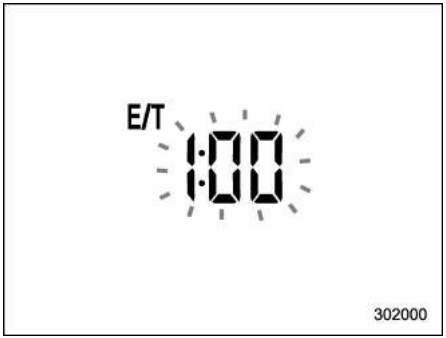


The journey time indication flashes each time a complete hour has elapsed. If the display is giving a reading other than the journey time, the display switches to the journey time, flashes for 5 seconds, and returns to its original reading each time a complete hour has elapsed.

## NOTE

**The journey time is reset when the ignition switch is turned to the “LOCK”/“OFF” or “ACC” position.**

▼ **Average vehicle speed**

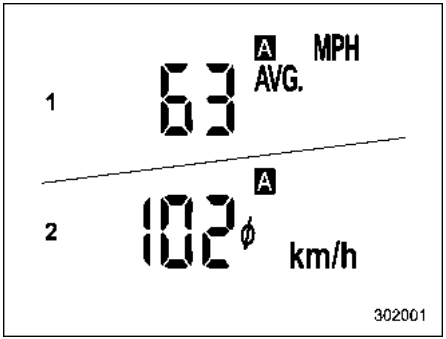


1) When setting the displayed unit as MPH
2) When setting the displayed unit as km/h

This display shows the average vehicle speed since the trip meter was last reset.

Press the TRIP RESET switch to switch between the displays for the average vehicle speed that corresponds to the A trip meter mileage and the average vehicle speed that corresponds to the B trip meter mileage.

When the trip meter display is reset, the corresponding average vehicle speed value is also reset.

## NOTE

**When the trip meter display is reset, the average vehicle speed corresponding to that trip meter display is not shown until the vehicle has subsequently covered a distance of 1 km (or 1 mile).**

– CONTINUED –

### ▼ Auto Start Stop time (if equipped)

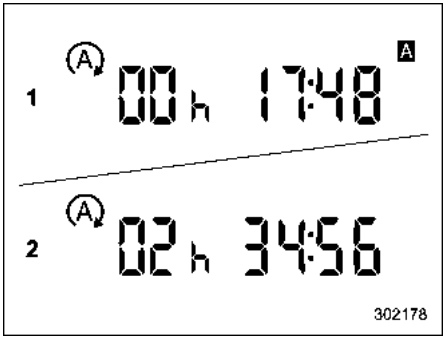


1) Total time in conjunction with the trip meter
2) Total time in conjunction with the ignition switch

This display shows the total time that the engine was stopped by the Auto Start Stop system in the following ways.

**Total time in conjunction with the trip meter**: Displays the total time that the engine was stopped by the Auto Start Stop system, from the last time the currently displayed trip meter was reset until the current time. By pressing the TRIP RESET switch, you can toggle the display between the time the engine was stopped for trip A and the time the engine was stopped for trip B.

## NOTE

**When the trip meter mileage is reset, the total time in conjunction with the trip meter is not shown until the vehicle has subsequently covered a distance of 1 km (or 1 mile).**

**Total time in conjunction with the ignition switch**: Displays the total time that the engine was stopped by the Auto Start Stop system, from the time when the ignition switch was turned to the "ON" position to the current time.

#### ▽ How to switch the display

Perform the following operation to toggle the display between the total time in conjunction with the trip meter and the total time in conjunction with the ignition switch.

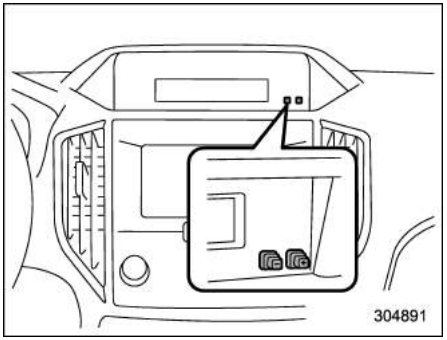


1. Press and hold the "+" button located on the side of the information display. The stopped time will then flash.
2. Within 5 seconds after the stopped time starts flashing, press and hold the "−" button located on the side of the information display. The display will then change and after flashing for 2 seconds, the stopped time selected will be displayed.
3. Each time the "−" button is pressed and held during the 3 seconds that the display is flashing, the display will change and flash for 2 seconds. If the "−" button is not pressed and held during the 3 second period that the display is flashing, the stopped time selected will be displayed.

### ▼ Turn off display of driving information display

Select the blank space in the menu to exit the driving information display selection.

## NOTE

- **The average fuel consumption and average vehicle speed are calculated even while the driving information display has been turned off.**
- **Even if you turn off the driving information display, the display will automatically turn on when the battery voltage is disconnected and then reconnected for battery replacement or**

**fuse replacement.**

## ■ Outside temperature indicator

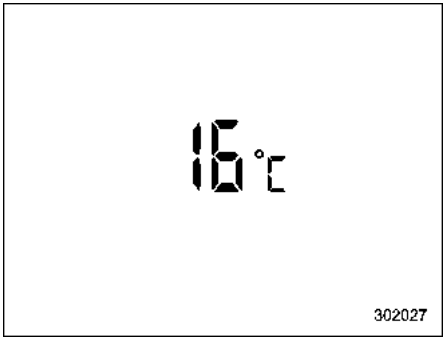


### NOTE

- **The outside temperature indicator shows the temperature around the sensor. Therefore, the temperature indication may differ from the actual outside air temperature.**
- **The temperature unit cannot be changed.**

▼ **Road surface freeze warning indication**

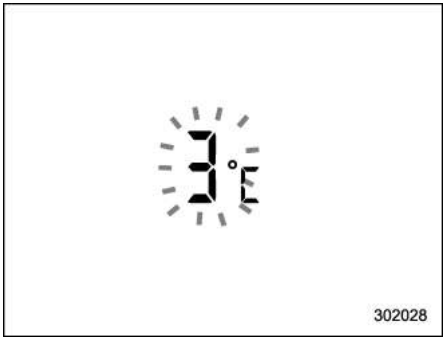


When the outside temperature drops to a certain temperature or lower, the temperature indication flashes for 5 seconds to show that the road surface may be frozen.

If the display is already indicating that the outside temperature is low when the ignition switch is turned to the “ON” position, the indication does not flash.

### NOTE

- **The outside temperature indication may differ from the actual outside temperature. The road surface freeze warning indication should be treated only as a guide. Be sure to check the condition of the road surface before driving.**
- **After the road surface freeze warning has already appeared on the display, the warning will not appear again even if the outside temperature drops to 3°C (37°F) or lower until once the outside temperature has increased to 5°C (41°F) or more before that time.**

## ■ X-MODE indicator

This indicator will be shown while the X-MODE is activated. It will turn off when the X-MODE is deactivated.

## ■ Clock

For details about clock setting, refer to “Clock” ☞3-66.

# Multi-function display (color LCD) (if equipped)

## NOTE

**For models with multi-function display (black and white), refer to "Multi-function display (black and white)" ☞3-44.**

**⚠ WARNING**

**Always pay adequate attention to safe driving when operating the multi-function display (color LCD) while the vehicle is in motion. When operation of the multi-function display (color LCD) is disturbing your awareness and ability to concentrate on driving, stop the vehicle in a safe place before performing operations on the screen. Also, do not concentrate on the display while driving. Doing so may cause you to look away from the road and could result in an accident.**

## ■ Features

The multi-function display (color LCD) has the following functions.

| Description | Page |
|---|---|
| Displays useful messages, such as notifications, etc. | 3-51 |
| Displays basic screens (e.g. fuel consumption screen, etc.) | 3-52 |
| Sets and adjusts maintenance notification | 3-63 |

Also, the multi-function display (color LCD) can also be used to set and initialize the multi function display itself.

## NOTE

- **When the vehicle is in motion, certain functions and selections may not be available.**
- **You can set the language and units for both the multi-function display (color LCD) and the combination meter at the same time. For details about setting the language and units, refer to "Screen Settings" ☞3-42.**
- **The images displayed in this Owner's Manual are sample images. The actual image may vary depending on the destinations and specifications.**

## ■ Welcome screen

When the driver's door is opened and closed, the welcome screen will appear for a short time.

## NOTE

- **The welcome screen will disappear when the ignition switch is turned to the "ON" position while the welcome screen is displayed.**
- **The welcome screen can be set to on or off. For details, refer to "Screen Settings" ☞3-42.**
- **For a certain period of time after the welcome screen has once appeared, it may not appear again even when the driver's door is opened and closed again. This does not indicate a malfunction.**

## ■ Self-check screen

### NOTE

**When the setting is "On", the self check screen appears. For details about this setting, refer to "On/Off setting" ☞3-64.**

When the ignition switch is turned to the "ON" position, the vehicle self-check will be performed.

The screens corresponding to the following items will appear one after another for several seconds each.

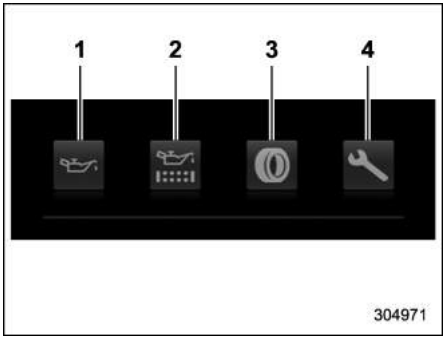


1) Engine oil: Checks the interval of engine oil replacement.
2) Oil filter: Checks the interval of oil filter replacement.
3) Tires: Checks the interval of tire rotation.
4) Inspection and maintenance: Checks the interval of inspection and maintenance.

When checks are performed, the icon for the item being checked will increase in brightness. The changing starts in sequential order from left to right.

If there is a notification, the message will be displayed. Take the appropriate actions based on the message indicated.

After completing the self-check, today's date, the stored birthday or the stored anniversary is displayed.

### NOTE

- **After performing the maintenance, change the setting of the corresponding maintenance item. For details, refer to "Maintenance settings" ☞3-63.**
- **The maintenance notification screen will be displayed under either of the following conditions.**
  - **– The period of time remaining until the registered notification date is 15 days or less.**
  - **– The total driving distance remaining until the registered notification distance is approximately 500 km (311 miles) or less.**
- **The maintenance notification screen will be displayed until either of the following conditions is satisfied.**
  - **– The period of time passed after the registered notification date is 15 days or more.**
  - **– The total distance driven after the registered notification distance is approximately 500 km (311 miles) or more.**

## ■ Interruption screen

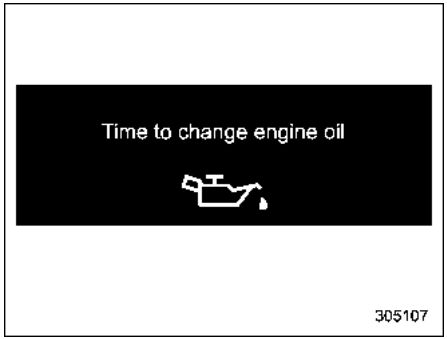


**Example**

Useful messages, such as reminder information may interrupt the current screen and appear on the display accompanied by a beep. Take proper action according to the message.

The interrupt screen will return to the original screen after a few seconds. Also, the interrupt screen can be skipped by pressing the INFO button.

– CONTINUED –

## ■ Basic operation

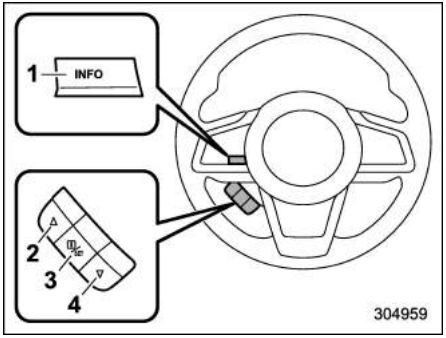


**Control switch**
1) INFO button
2) ▲ (Up)
3) "i/SET"
4) ▼ (Down)

Press the INFO button on the steering wheel to switch the item displayed on the basic screen. You can operate the items on the setting screen by using the "▲", "▼" and "i/SET" switches.

## ■ Basic screens

While the ignition switch is in the "ON" position, the basic screen will be displayed.

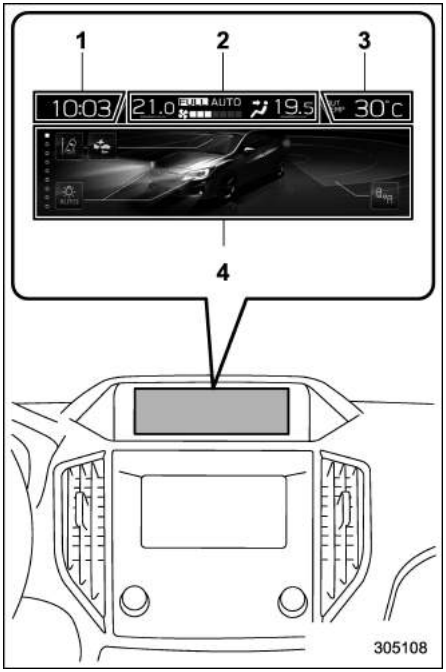


1) Clock
2) Climate control*
3) Outside temperature
4) Information screen

*: This is not displayed on the multi-function display (color LCD) when the ignition switch is in the "ACC" position.

### ▼ Outside temperature indicator

The outside temperature is displayed on the multi-function display (color LCD).

## NOTE

- **The outside temperature indicator shows the temperature around the sensor. Therefore, the temperature indication may differ from the actual outside air temperature.**
- **The temperature unit cannot be changed.**

### ▼ Climate control screen

The climate control status is displayed on the multi-function display (color LCD).

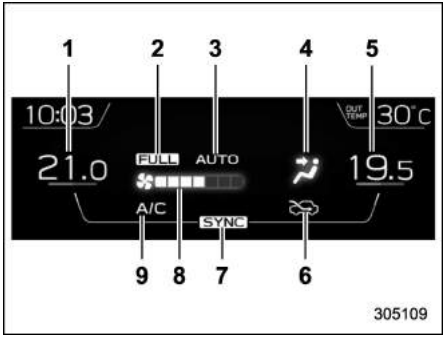


**Climate control screen**

1) Set temperature indicator (left-hand side)*1
2) FULL AUTO indicator
3) AUTO indicator
4) Airflow mode indicator
5) Set temperature indicator (right-hand side)*1
6) Air inlet selection indicator
7) SYNC indicator*2
8) Fan speed indicator
9) Air conditioner ON indicator

*1: For models without the SYNC function, the indicator is only displayed on the driver's side

*2: Models with the SYNC function only

When operating the climate control system, the basic screen switches to the climate control screen. For details about climate control operation, refer to "Climate control panel" ☞4-2.

### ▼ Clock

The clock can be displayed in either 12-hour display or 24-hour display. For details about the setting, refer to "Clock" ☞3-66.

– CONTINUED –

### ▼ Information screen

Press the INFO button on the steering wheel to switch the item displayed on the information screen.

| Content | Description | Page |
|---|---|---|
| Electric components operating status screen | Displays the operating status of the electric components and equipment. | 3-55 |
| Prevention safety screen | Displays the status of your vehicle. | 3-55 |
| EyeSight screen*1 | Displays the operating status of EyeSight. | 3-56 |
| Favorite screen | Displays up to 3 optional items. | 3-56 |
| Navigation screen*2 | Displays information linked with the navigation system. | 3-57 |
| Audio screen | Displays audio system information. | 3-57 |
| Fuel consumption screen | Displays fuel consumption information. | 3-58 |
| Clock screen | Displays the clock. | 3-58 |
| Guidance screen | Shifts to the setting screen. | 3-58 |

*1: Models with EyeSight system
*2: Models with navigation system

▽ **Electric components operation screen**

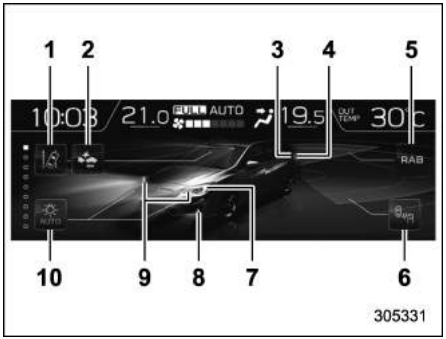


1) Lane Departure Warning indicator*1
2) Pre-Collision Braking System indicator*1
3) Rear fog light*1
4) Stop lights
5) Reverse Automatic Braking (RAB)*1
6) SRVD*1
7) Headlights*2
8) Front fog lights*1*2
9) Turn signals
10) Auto on/off headlights*1

*1: If equipped
*2: The daytime running lights are not displayed.

This screen displays the electric components operation status of the vehicle.

## NOTE

- **Indicators do not display for functions that are not equipped to the vehicle.**
- **The indicators of functions that are not operating are displayed in grey.**
- **For models with auto on/off headlights; If the multi-function display (color LCD) unit, battery, or fuse is removed, the Auto on/off headlights indicator turns off on the multi-function display (color LCD). After reinstalling the removed multi-function display (color LCD) unit, battery, or fuse to the vehicle, the Auto on/off headlights indicator will appear once more if the light control switch is turned to the "AUTO" position.**
- **The exterior light indicators on the screen do not notify the driver when the bulbs burn out. The indicators on the screen still illuminate.**

▽ **Prevention safety screen**

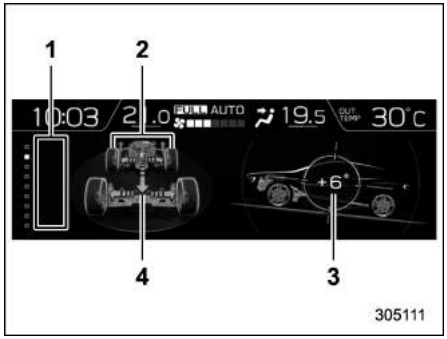


1) Telltale screen
2) Steering angle
3) Vehicle posture
4) Running condition

This screen displays the driving status of the vehicle and the operation status functions. For functions that are operating, the indicator will illuminate or flash.

– CONTINUED –

## NOTE

- **The vehicle posture indication may differ from the actual vehicle posture.**
- **When X-MODE has turned on, the screen of the multi-function display is switched to the prevention safety screen.**

### ▽ EyeSight screen (models with EyeSight system)

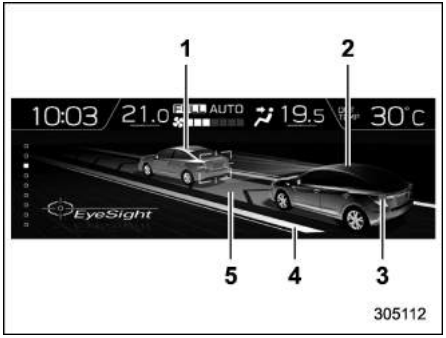


1) Lead vehicle indicator
2) Your own vehicle indicator
3) Stop lights
4) Road line indicator
5) Lane indicator

This screen displays the status of the EyeSight system.

The lead vehicle indicator moves forward and backward depending on the distance with the vehicle in front. For details, refer to the Owner's Manual supplement for the EyeSight system.

### ▽ Favorite screen

**Favorite screen (display example)**

This screen displays up to three optional pieces of information that can be selected from the following items.

| Item | Details |
|---|---|
| | The engine coolant temperature is displayed. |
| | The engine oil temperature is displayed. |
| | The average vehicle speed is displayed. |
| | The accelerator opening ratio is displayed. |
| | The vehicle posture is displayed. |
| | The current rate of fuel consumption is displayed. |
| | The direction of the vehicle is displayed.*1 |
| | The posted speed limit of the road you are currently driving on is displayed.*1 |

| Item | Details |
|---|---|
| | The calendar is displayed. |
| | Nothing is displayed. |

*1: If equipped

## NOTE

**Some displayed items may be not displayed depending on the model and specifications.**

The items shown in the favorite screen can be changed. For details, refer to “Favorite setting” ☞3-62.

### ▽ Navigation screen (if equipped)

305114

The navigation system information to the destination is displayed on the screen.

## NOTE

**When a destination is not set in the navigation system, the compass orientation, name, route sign and speed limit of the road the vehicle is traveling on remain displayed on the screen.**

### ▽ Audio screen

305115

The screen of the currently selected audio source is displayed.

For details about how to use the audio set, refer to the separate navigation/audio Owner’s Manual.

– CONTINUED –

### ▽ Fuel consumption screen

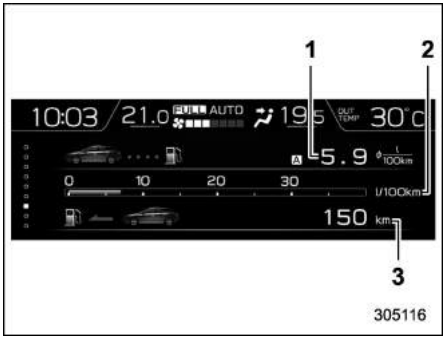


1) Average fuel consumption corresponding to the driving distance of each trip meter
2) Current fuel consumption
3) Driving range on remaining fuel

The fuel consumption information is displayed on the screen.

## NOTE

**The driving range on remaining fuel is only a guide. The indicated value may differ from the actual driving range on remaining fuel, so you must immediately fill the tank when the low fuel warning light illuminates.**

### ▽ Clock/date screen

The time and date are displayed.

You can select the time and date. For details, refer to “Clock” ☞3-66.

### ▽ Guidance screen

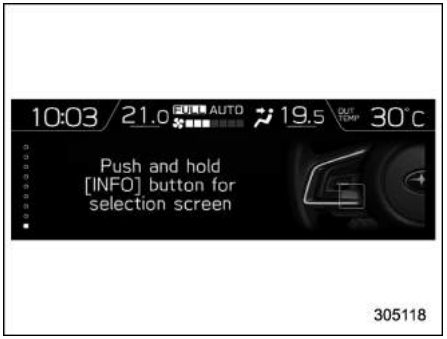


When the INFO button on the steering wheel is pressed and held on this screen, the setting screen can be displayed.

For details, refer to “Setting screen” ☞3-59.

## NOTE

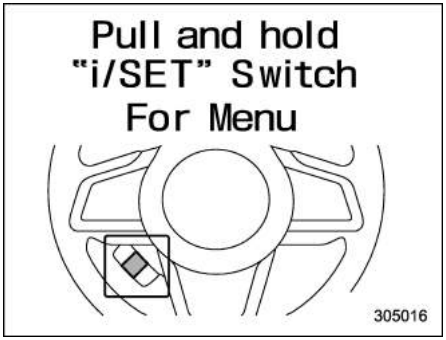


**When the combination meter display (color LCD) is displaying the menu screen entering screen, the system will not move to the setting screen even if the INFO button is pressed and held.**

## ■ Setting screen

1. Press and hold the INFO button on the guidance screen. The top menu is displayed.
2. Operate the "▲" or "▼" switch to select the preferred menu from the top menu.
3. Pull the "i/SET" switch to enter the selected menu.
4. Operate the "▲" or "▼" switch to select the preferred menu from the 2nd menu.
5. Pull the "i/SET" switch to enter the selected menu.

– CONTINUED –

The menu list is as follows.

| Top menu | 2nd menu | Description | | Page |
|---|---|---|---|---|
| Time/Date | Time/Date* | Set and adjust the date. 12h or 24h format can be selected. | | 3-61 |
| | Birthday | Set a birthday. | | 3-61 |
| | Anniversary | Set an anniversary day. | | 3-61 |
| | Go Back | Return to the 1st menu. | | — |
| Display/Beep | Screen Off* | Turn the screen on or off. | Yes or No | 3-62 |
| | Favorite | Set and customize the triple meter. | | 3-62 |
| | Bypass Screen | Set the bypass screen for each item. | On or Off | 3-63 |
| | Beep | Adjust the beep sound volume. | High, Low or Off | 3-63 |
| | Go Back | Return to the 1st menu. | | — |
| Maintenance | Engine Oil | Set and adjust the oil maintenance notification date. | | 3-63 |
| | Oil Filter | Set and adjust the oil filter maintenance notification date. | | 3-64 |
| | Tires | Set and adjust the tire maintenance notification date. | | 3-64 |
| | Maintenance Schedule | Set and adjust the vehicle maintenance notification date. | | 3-64 |
| | ON/OFF | Turn on or off the self-check screen that is activated when the ignition switch is turned to the “ON” position. | On or Off | 3-64 |
| | Clear All Settings | Clear all settings for maintenance items. | Yes or No | 3-65 |
| | Go Back | Return to the 1st menu. | | — |
| Initialize | — | Reset all settings to the default settings. | Yes or No | 3-65 |
| Go Back | — | Return to the settings screen. | | — |

*: You can also set this while driving.

### ▼ Date and time settings

You can set the date, time and 12h or 24h format settings.

#### ▽ Current date and time setting

For details about clock setting, refer to “Clock” ☞3-66.

#### ▽ Birthday setting

1. Select “Birthday” from the 2nd menu in the setting screen. Refer to “Setting screen” ☞3-59.

305120

2. Select from the list the number that you want to register.

305121

3. Enter the date and the text by using the control switches.
4. Select “Set” to exit settings. Select “Go Back” to return to the previous screen without applying the setting changes.

## NOTE

**You can store a maximum of the 5 birthdays.**

If a birthday is approaching, the reminder screen will be displayed when the ignition switch has been turned to the “ON” position. This function can be set to on or off. For details, refer to “Bypass screen setting” ☞3-63.

#### ▽ Anniversary setting

1. The procedure for setting an anniversary is the same as “Birthday setting” ☞3-61, except that in step 1 “Anniversary” is selected.

## NOTE

**You can store a maximum of 5 anniversaries.**

– CONTINUED –

## ▼ Display/Beep settings

You can set the display settings and volume settings.

### ▽ Screen OFF setting

1. Select “Screen Off” from 2nd menu in setting screen. Refer to “Setting screen” ☞3-59.

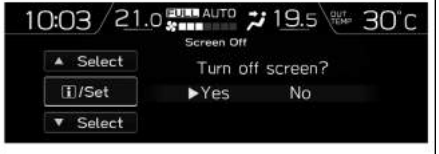

305122

2. Select “Yes” to turn off the screen. Select “No” to return to the previous screen.

### Restoring the screen

When the INFO button is operated after the ignition switch is turned to the “ON” or “ACC” position, the screen will be restored. The screen will be restored with the basic screen that was displayed when the screen was turned off.

## NOTE

**While the screen is off, the screen switches to the climate control screen only when the climate control system is operated.**

### ▽ Favorite setting

1. Select the “Favorite” from 2nd menu in setting screen. Refer to “Setting screen” ☞3-59.

305123

2. Set the desired items by using the control switches. For details about items, refer to “Favorite screen” ☞3-56.
3. Select “Set” to exit settings. Select “Go Back” to return to the previous screen without applying the setting changes.

## NOTE

- **You can display a maximum of the 3 items.**
- **The same item cannot be selected for the left, center or right location.**

### ▽ Bypass screen setting

1. Select “Bypass Screen” from the 2nd menu in the setting screen. Refer to “Setting screen” ☞3-59.

305124

2. Select on or off to turn the display of items on or off by using the control switches.
3. Select “Set” to exit settings. Select “Go Back” to return to the previous screen without applying the setting changes.

### ▽ Beep setting

1. Select “Beep” from the 2nd menu in the setting screen. Refer to “Setting screen” ☞3-59.

305125

2. Set the beep volume by using the control switches.
3. Select “Set” to exit settings. Select “Go Back” to return to the previous screen without applying the setting changes.

## ▼ Maintenance settings

You can set maintenance reminders.

### ▽ Engine oil setting

1. Select “Engine Oil” from the 2nd menu in the setting screen. Refer to “Setting screen” ☞3-59.

305126

2. Set the date and distance of the reminder by using the control switches.
3. Select “Set” to exit settings. Select “Update” to change the notification distance to the default value. Select “Go Back” to return to the previous screen without applying the setting changes.

– CONTINUED –

## NOTE

- **The reminder will be displayed by either date or distance in accordance with the setting.**
- **Even when either "Day" or "Distance" are displayed as "_ _" a pop-up screen will appear.**
- **The reminder will be displayed until either of the following conditions is satisfied.**
  - **The period of time passed after the registered notification date is 15 days or more.**
  - **The total distance driven after the registered notification distance is approximately 500 km (311 miles) or more.**

### ▽ Oil filter setting

The setting procedure is the same as "Engine oil setting" ☞3-63, but select the "Oil Filter" item in step 1.

### ▽ Tires setting

The setting procedure is the same as "Engine oil setting" ☞3-63, but select the "Tires" item in step 1.

### ▽ Maintenance schedule setting

The setting procedure is the same as "Engine oil setting" ☞3-63, but select the "Maintenance Schedule" item in step 1.

### ▽ On/Off setting

1. Select "On/Off" from the 2nd menu on the setting screen. Refer to "Setting screen" ☞3-59.

305127

2. Select on or off on the opening screen by using the control switches.
3. Select "Set" to exit settings. Select "Go Back" to return to the previous screen without applying the setting changes.

### ▽ Clear setting

1. Select “Clear All Settings” from the 2nd menu on the setting screen. Refer to “Setting screen” ☞3-59.

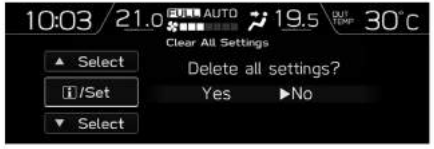

305128

2. Select “Yes” or “No” by using the control switches.

### ▼ Initialize

You can initialize the items that have been set to your preference.

1. Select “Initialize” from the 2nd menu on the setting screen. Refer to “Setting screen” ☞3-59.

305129

2. Select “Yes” or “No” by using the control switches.

## ■ How to get the source code using the open source

Free/Open Source Software Information

This product contains Free/Open Source Software (FOSS).
The license information and/or the source code of such FOSS can be found at the following URL.

http://www.globaldenso.com/en/open-source/ivi/subaru/

# Clock

For models with a SUBARU genuine navigation and/or audio system, the clock can be adjusted using either auto mode or manual mode.

- Auto mode: automatic clock adjustment
- Manual mode: manual clock adjustment

## ■ Setting the clock manually

### ▼ Type A multi-function display (black and white)

1. Turn the ignition switch to “ON”.

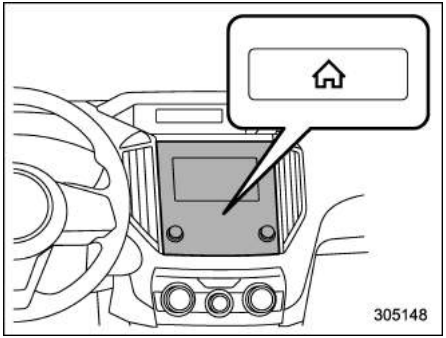


2. Press the ⌂ button.
3. Select “Settings”.
4. Select “Vehicle”.
5. Select “Clock adjustment” and then select “Manual”.

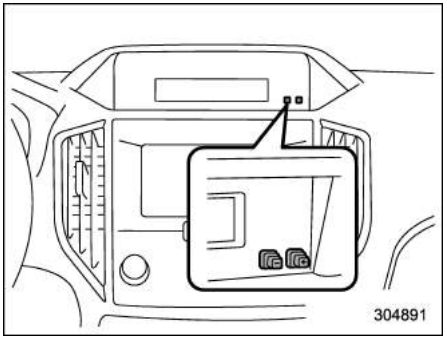


6. Press the “+” button or the “−” button beside the clock.

#### ▽ Setting 12-hour or 24-hour display

The clock can be set to 12-hour or 24-hour display. Perform the following procedure to switch the display format.

1. Turn the ignition switch in the “LOCK”/“OFF” position.
2. Press and hold the “−” button located near the clock display for approximately 5 seconds. The clock display will then start to flash.
3. While the clock display is flashing, press and hold the “+” button for approximately 2 seconds. The clock format will then change.
4. The clock display will continue to flash for approximately 3 seconds to indicate that the clock display has been changed.

▼ **Type B multi-function display (color LCD)**

## NOTE

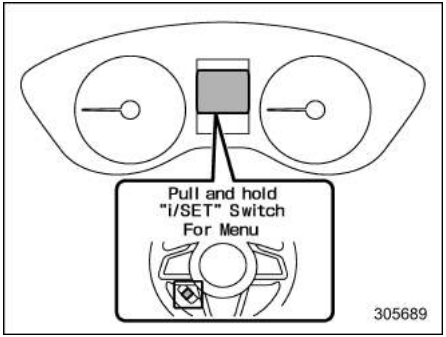


**When the combination meter display (color LCD) is displaying the menu screen entering screen, the system will not move to the selection screen even if the "INFO" button is pressed and held. Before adjusting the clock, be sure to change the combination meter display (color LCD) to a screen other than the menu screen entering screen.**

1. Turn the ignition switch to "ON".

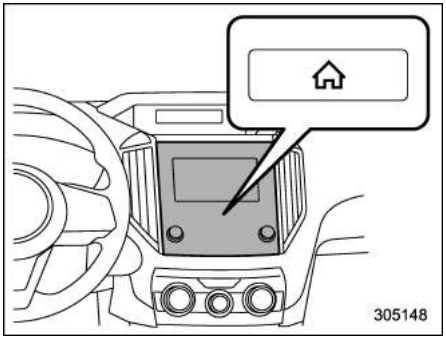


2. Press the ⌂ button.
3. Select "Settings".
4. Select "Vehicle".
5. Select "Clock adjustment" and then select "Manual".

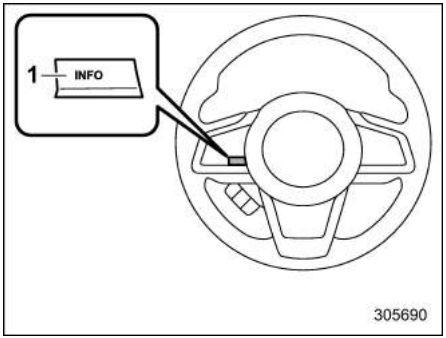


1) "INFO" button

6. Press the "INFO" button on the steering wheel to display the guidance screen.

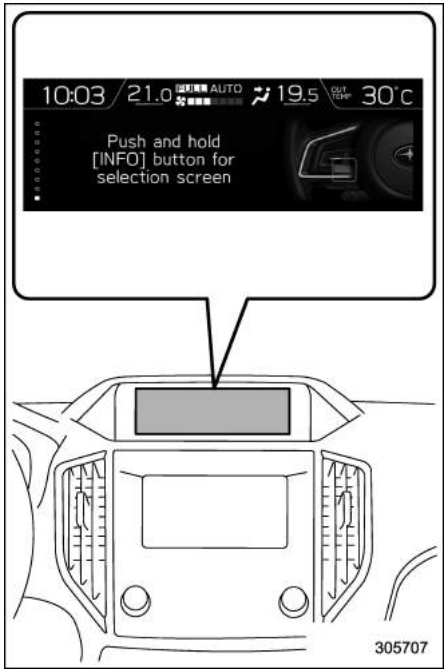


7. While displaying the guidance screen, press and hold the "INFO" button on the steering wheel. The screen goes to the selection screen.

– CONTINUED –

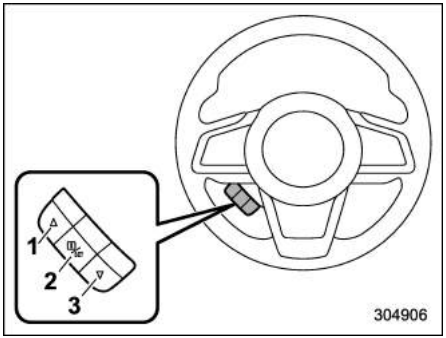


1) ▲
2) i/SET
3) ▼

8. Pull the "▲" or "▼" switch to select the item.

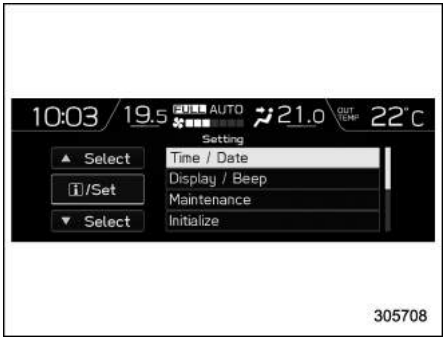


9. Select "Time/Date" and pull the i/SET switch.

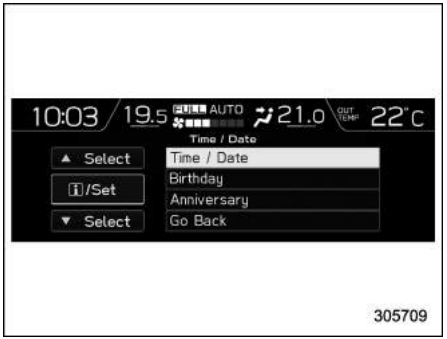


10. Select "Time/Date" and pull the i/SET switch.

## NOTE

**If "Clock adjustment" is not in manual mode, "Time/Date" cannot be selected. Be sure to perform steps 2 through 5.**

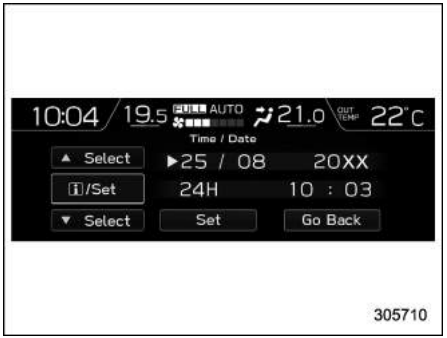


11. Pull the "▲", "▼" switches to scroll through to the items you can set.
    (1) Use the i/ SET switch to choose the item you would like to change.
    (2) Pull the "▲", "▼" switches to adjust the items.
12. Select "Set" and pull the i/SET switch to complete the clock setting.

Select "Go Back" to return to the previous screen without saving settings.

## NOTE

**The Birthday/Anniversary and maintenance reminder system function are based on the time and date on the multifunction display (color LCD).**

## ■ Setting the clock automatically

1. Turn the ignition switch to “ON”.

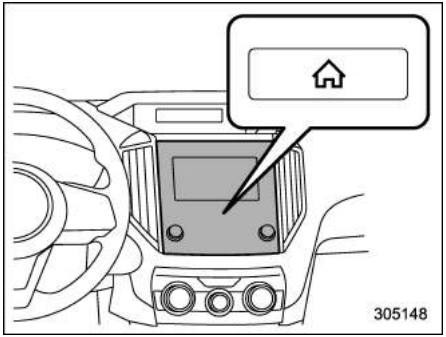


2. Press the ⌂ button.
3. Select “Settings”.
4. Select “Vehicle”.
5. Select “Clock adjustment” and then select “Auto”.
6. Press the ⌂ button again to complete the setting.

### ▼ Models with navigation system

The clock will be set automatically where a GPS signal is available.

### ▼ Models without navigation system

The clock will be set and adjusted automatically when a smartphone is connected via Bluetooth® for transferring phonebook data.

1. Register the smartphone to the audio system. For details, refer to “Bluetooth SETTINGS” in the supplemental Owner’s Manual for the audio/navigation system.
2. Transfer phonebook data to the system. For details, refer to “Bluetooth SETTINGS” in the supplemental Owner’s Manual for the audio/navigation system. The clock will be adjusted automatically.

### NOTE

**Depending on the model of smartphone, the settings of the connected smartphone may need to be changed. (ex: For iOS or other models, notification settings may need to be activated.)**

**For details, check the instructions on connecting smartphones.**

## ■ Regulatory information

The Bluetooth® word mark and logos are registered trademarks owned by Bluetooth SIG, Inc.

# Light control switch

**⚠ CAUTION**

- **Use of any lights for a long period of time while the engine is not running can cause the battery to discharge.**
- **Before leaving the vehicle, make sure that the light control switch is turned to the off position. If the vehicle is left unattended for a long time with the light control switch set to a position other than the off position, the battery may be discharged.**

**Models with “keyless access with push-button start system”:**

The light control switch operates when the push-button ignition switch is in the “ACC” or “ON” position.

Regardless of the position of the light control switch, the illuminated lights are turned off when the push-button ignition switch is turned off.

– CONTINUED –

**Models without "keyless access with push-button start system":**

The light control switch operates when the key is inserted in the ignition switch.

Regardless of the position of the light control switch, the illuminated lights are turned off when the key is removed from the ignition switch.

## NOTE

**The light control switch can be operated (except auto on/off headlights), even under the following conditions.**

- **when the key is not inserted into the ignition switch (models without "keyless access with push-button start system")**
- **when the push-button ignition switch is turned off (models with "keyless access with push-button start system")**

**If the driver's door is opened while the headlights are illuminated under such conditions, the chirp sound will inform the driver that the lights are illuminated.**

## ■ Headlights

## NOTE

**When you drive in a foreign country in which the vehicular lane (left-hand traffic or right-hand traffic) is different from your country, to avoid blinding the oncoming driver, you need to block a part of the headlight lenses. For details, refer to "Driving in a foreign country in which the vehicular lane is different to your country" ☞8-4.**

### ▼ Operation

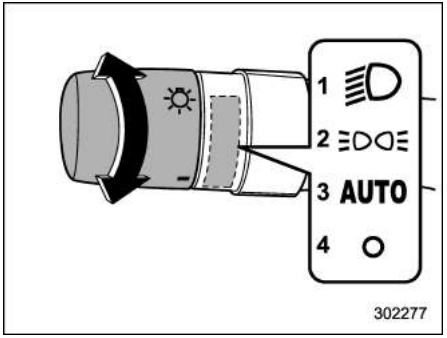


**Except Australia models**

1) Second position
2) First position
3) Auto position (if equipped)
4) Off position

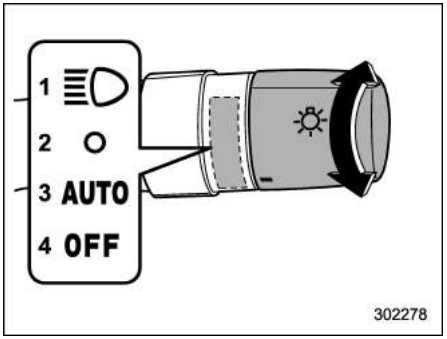


**Australia models**

1) Second position
2) First position
3) Auto position (if equipped)
4) Off position

To turn on the headlights, turn the knob on the end of the turn signal lever.

**Second position:**

Headlights, front position lights, instrument panel illumination, tail lights and license plate lights are on.

**First position:**

Front position lights, instrument panel illumination, tail lights and license plate lights are on.

**Auto position: auto on/off headlights (if equipped):**

When the ignition switch is in the “ON” position, the headlights, front position lights, instrument panel illumination, tail lights and license plate lights are **automatically on or off** depending on the level of the ambient light.

**Off position:**

The headlights are all off.

## NOTE

**The sensitivity of the auto on/off headlights can be changed by your SUBARU dealer. We recommend that you contact your SUBARU dealer for details.**

### ▼ Auto-on/off wiper-linked headlights (models with auto on/off headlights)

With the light control switch in the “AUTO” position, the headlight will automatically turn on when the windshield wipers operate nine times or more. The headlight will automatically turn off when the wiper stops.

The amount of wiper operation is counted after the wiper is activated, with wiper movement within 10 seconds after activation. The amount of wiper operation is reset if the wiper operation is stopped for over 10 seconds. The operational/non-operational setting of the linked wiper operation and headlight illumination can be changed by your SUBARU dealer. For details, we recommend that you contact your SUBARU dealer.

## NOTE

**If the vehicle passes through a tunnel with its headlights illuminated in the linked operation with the wipers, the headlights will continue to be illuminated for approximately 20 seconds even after coming out from the tunnel. If the light control switch is set to a position other than “AUTO”, the headlights will turn on or off in accordance with the corresponding position of the light control switch.**

### ▼ Headlight off delay setting

The headlight off delay function turns on the headlights, etc. for smooth exiting from the vehicle at night or in a dark place.

## NOTE

**The factory setting (default setting) of the operation duration of the headlights and the exterior lights is 30 seconds. This setting can be changed to OFF (no operation), 30 seconds, 60 seconds, or 90 seconds at SUBARU dealers. For more details, we recommend that you contact a SUBARU dealer.**

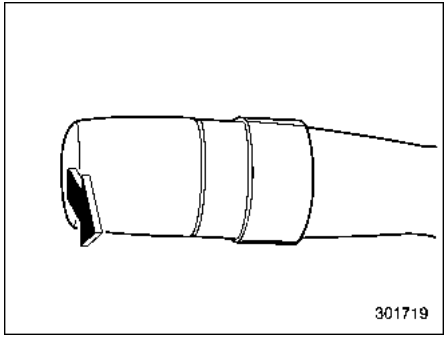


The headlight low beams and some exterior lights will illuminate, after following this procedure.

1. Turn off the ignition switch.
2. Place the light control switch to the auto position (if equipped) or off position.
3. Pull the turn signal lever.

The headlights and exterior lights will turn off when any of the following conditions

– CONTINUED –

occur.

- 30 seconds have passed since the driver's door was closed.
- You press the lock button on the access key fob/transmitter two times successively.
- You touch the door lock sensor on the door handle two times successively (models with "keyless access with push-button start system").

## NOTE

- **While the headlight off delay function is operating, if you perform any of the following operation, the headlights and exterior lights will turn off.**
  - **– Turn the ignition switch to the "ON" position.**
  - **– Set the headlight flasher to the "OFF" position.**
  - **– Set the light control switch to a position other than the "AUTO" or "OFF" position.**
- **If the driver's door is not opened and closed, these lights will turn off in 3 minutes.**

### ▼ Sensor for the auto on/off headlights (rain light sensor) (if equipped)

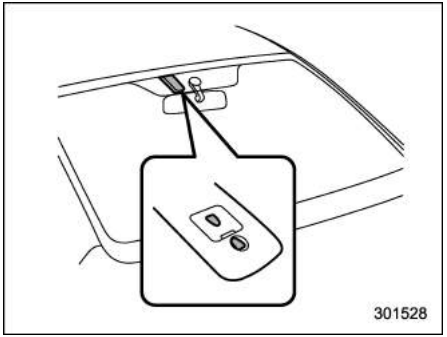


The sensor is on the windshield glass as shown in the illustration.

**⚠ CAUTION**

**If any object is attached on or near the sensor, the sensor may not detect the level of ambient light correctly and the auto on/off headlights may not operate properly.**

## ■ High/low beam change (dimmer)

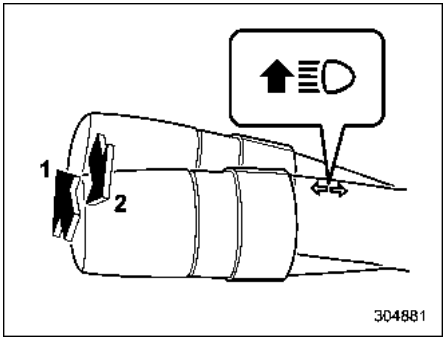


1) High beam
2) Low beam

To change from low beam to high beam, push the turn signal lever forward. When the headlights are on high beam, the high beam indicator light "" on the combination meter is also on.

To switch back to low beam, pull the lever back to the center position.

## ■ Headlight flasher

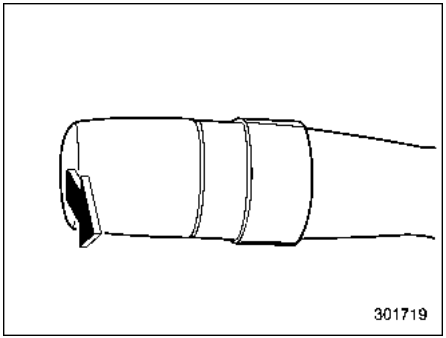


**⚠ CAUTION**

**Do not hold the lever in the flashing position for more than just a few seconds.**

To flash the headlights, pull the lever toward you and then release it. The high beam will stay on for as long as you hold the lever.

When the headlights are on high beam, the high beam indicator light "" on the combination meter is also on.

## ■ High Beam Assist function (if equipped)

### NOTE

- **Do not overestimate the capacity of the High Beam Assist function. The driver always has the responsibility to understand the surrounding situation, to drive safely, and to change the headlight mode manually if necessary.**
- **Observe the following points in order to operate the High Beam Assist function properly.**

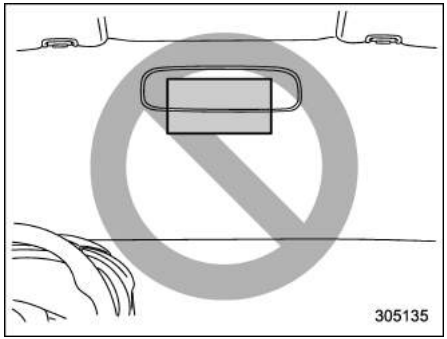


**– Do not attach labels or stickers to the windshield glass near the camera.**
**– Do not attach any accessories near the inside mirror and camera.**
**– Do not place any objects over the dashboard.**
**– Do not touch the lens of the camera.**
**– Do not touch the camera.**
**– Do not apply any strong impact to the camera or the inside mirror.**
**– Do not disassemble the camera and inside mirror.**
**– Do not spill liquid on the inside mirror and camera.**
**– Do not carry excessive luggage.**
**– Do not modify the vehicle.**
**– Always replace the windshield glass with genuine SUBARU parts (or equivalent products).**

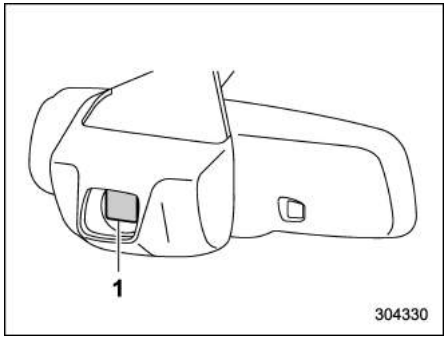


1) Camera for High Beam Assist function

The high beam assist function automatically changes the headlight from high beam to low beam (or vice versa). When

– CONTINUED –

all of the following conditions are met, the headlight will change to high beam.

- When the vehicle speed increases to or above the preset level.
- There is no preceding vehicle.
- The forward area of the vehicle is dark.

When any of the following conditions is met, the headlight will change to low beam.

- When the vehicle speed decreases to or below the preset level.
- When the forward area of the vehicle is bright.
- When there is a preceding or oncoming vehicle.

## NOTE

- **The preset vehicle speed varies depending on the models.**
- **The factory setting (default setting) for this function is set as "operational". This setting can be changed to OFF (non-operation) at SUBARU dealers. For more details, we recommend that you contact a SUBARU dealer.**

### ▼ How to use the High Beam Assist function

The High Beam Assist function will be activated when all the following conditions are met.

- The light control switch is in the "AUTO" position and the low beam headlights are on automatically.
- The turn signal lever is pushed forward.

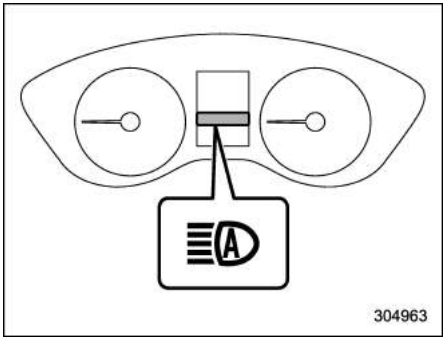


**High Beam Assist indicator (green)**

When the High Beam Assist function is activated, the High Beam Assist indicator (green) on the combination meter will illuminate.

**Malfunction of the High Beam Assist function:**

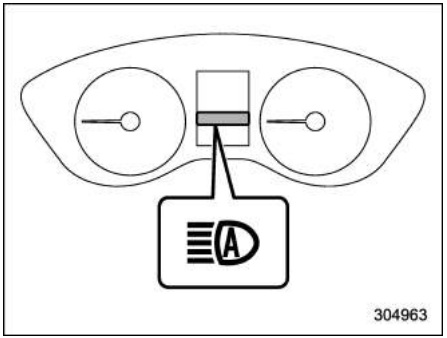


**High Beam Assist warning indicator (yellow)**

When the High Beam Assist function malfunctions, the High Beam Assist warning indicator (yellow) on the combination meter will appear. In this case, we recommend that you have your vehicle inspected by your SUBARU dealer.

**Temporary stop of High Beam Assist function:**

If the High Beam Assist function stops temporarily due to poor visibility or abnormal temperature, the message appears on the combination meter. When the condition is canceled, the system will be restored.

## NOTE

**Even when the operation conditions of the High Beam Assist function are met, there may be a case in which the High Beam Assist indicator does not illuminate and an abnormal condition warning is given. In this case, turn the ignition switch to "OFF" position and then "ON" position again. Check if the High Beam Assist indicator illuminates. If the indicator does not illuminate, we recommend that you have the vehicle inspected at a SUBARU dealer.**

### ▼ How to change the headlight mode manually

**Change to the low beam:**

When you return the turn signal lever to the center position, the high beam assist function will turn off and the High Beam Assist indicator will turn off.

**Change to the high beam:**

When you turn the light control switch to the "" position, the headlight mode will be changed to the high beam. At this time, the High Beam Assist function will turn off, the High Beam Assist indicator will turn off and the high beam indicator light will turn on.

## NOTE

**After manually changing the headlight mode to the high beam, if you turn on the High Beam Assist function, return the light control switch to the "AUTO" position.**

### ▼ Tips for the High Beam Assist system

- The High Beam Assist function recognizes the conditions surrounding the vehicle based on the brightness of illumination ahead of your vehicle, etc. Therefore, the headlight mode may switch in some situations that do not match to the driver's sense.
- A bicycle or cargo cycle may not be detected.
- Under the following situations, the brightness of ambient illumination may not be detected correctly and the High Beam Assist function may not work properly. As a result, the glare of the high beam may disturb the oncoming vehicle or vehicle ahead. Also, the low beam mode may continue although there are no oncoming vehicles and vehicles ahead. In the such cases, change the headlight mode manually.
  - In bad weather (fog, snow, sand storm, heavy rain, etc.).
  - When the windshield glass is dirty or fogged.
  - When the windshield is cracked or damaged.
  - When the inside mirror or the camera is deformed or dirty.
  - If there are lights similar to the headlights or the tail lights in the surrounding area.
  - When an oncoming vehicle or vehicle ahead is driven without its headlights and tail lights on.
  - If the headlights of an oncoming vehicle or the tail lights of a vehicle ahead are dirty or discolored, or if the light beams are not aimed correctly.
  - When a rapid change of brightness continues while driving.
  - When driving on a road with many ups and downs or uneven surfaces.
  - When driving on a road with many curves.
  - When there are some objects that reflect light strongly, such as a road sign or a mirror in vehicle ahead.
  - When the rear part of the vehicle ahead, such as a container, reflects light strongly.
  - When the headlights of your vehicle are damaged or dirty.
  - When your vehicle is tilted, such as in case the vehicle has a flat tire or is being towed.

– CONTINUED –

- In the following conditions, the headlight mode will not be automatically changed from the high beam to the low beam.
  - When your vehicle passes an oncoming vehicle suddenly in a blind curve.
  - When another vehicle passes in front of your vehicle.
  - When an oncoming vehicle or vehicle ahead comes in and out of view because of continuous curves, median strips, roadside trees, etc.
- If the camera detects the light of the front fog lights of an oncoming vehicle, the headlight mode may change from the high beam to the low beam automatically.
- The headlight mode may change from the high beam to the low beam, or the low beam mode may continue, when affected by a street light, traffic signal, illumination of an advertisement board, or a reflective object such as a road sign and signboard.
- The timing of the change of headlight mode may differ due to the following factors.
  - Color or brightness of the headlights of an oncoming vehicle or the tail lights of a vehicle ahead.
  - Movement and direction of an oncoming vehicle or a vehicle ahead.
  - When the headlights of an oncoming vehicle or the tail lights of a vehicle ahead illuminate on only one side.
  - When the oncoming vehicle or vehicle ahead is a motorcycle.
  - Conditions of a road (slope, curve, road surface, etc.).
  - Number of passengers and weight of loaded cargo.
- The range recognizable for the camera is ±15 degrees in both directions (30 degrees in total) from the vehicle front. The recognizable distance differs depending on the situation in the surrounding area.
- This function can be disabled at SUBARU dealers. For more details, we recommend that you contact a SUBARU dealer.

## ■ Daytime running light system (if equipped)

**⚠ WARNING**

**When the daytime running lights are illuminated, the tail lights do not illuminate. When it becomes dark outside, turn the light switch to the "" or "" position to illuminate the headlights and tail lights. This will improve visibility and allow other drivers to see your vehicle more easily.**

The daytime running lights will automatically illuminate when the following conditions are fulfilled.

- The engine is running.
- The parking brake is fully released.
- The light control switch is in the "AUTO" (if equipped) or off position.

### NOTE

- **When the headlight switch is in the ""/"" or ""/"" position, the daytime running light system is deactivated.**
- **For models with the auto on/off headlights, while the headlight switch is in the "AUTO" position and the headlights turn on automatically, the daytime running light is deactivated.**

## Steering Responsive Headlight (SRH) (if equipped)

SRH is a function that automatically moves the headlight beam to the left or right in accordance with the steering angle and vehicle speed. This function helps to improve the visibility at night by illuminating the road ahead at corners and intersections.

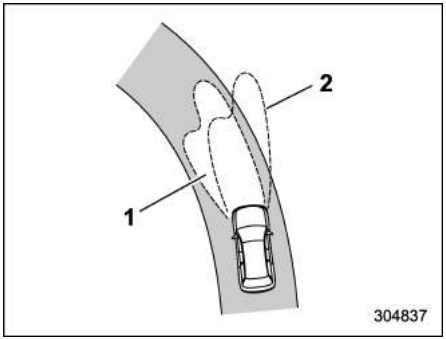


1) The target area of illumination when SRH is activated
2) The target area of illumination when SRH is not activated

**NOTE**

**SRH only activates when the vehicle is traveling forward at the speed of approximately 8 km/h (5 mph) and over.**

### ■ SRH OFF switch

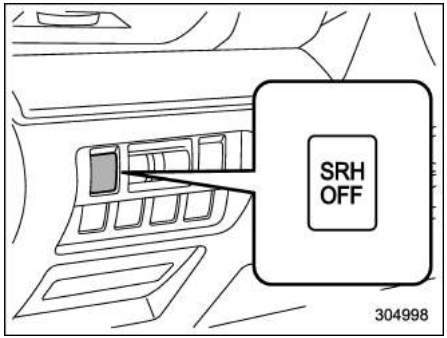


**Left-hand drive models**

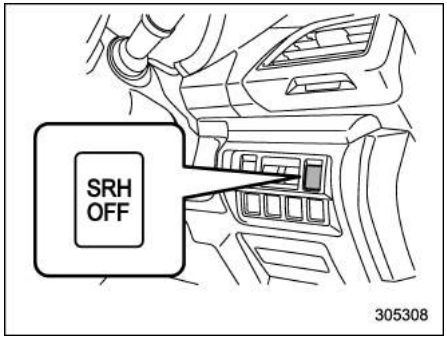


**Right-hand drive models**

You can turn the SRH function on or off by pressing the SRH OFF switch.

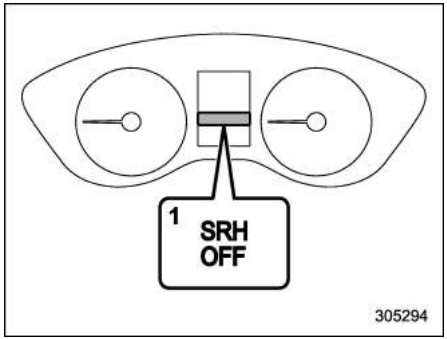


1) SRH OFF indicator

The SRH OFF indicator on the combination meter turns off when SRH is turned on.

– CONTINUED –

The SRH OFF indicator on the combination meter illuminates when SRH is turned off.

If SRH is malfunctioning, the SRH OFF indicator on the combination meter flashes when the ignition switch is in the “ON” position. It indicates that SRH has been deactivated. We recommend that you contact a SUBARU dealer for an inspection.

## NOTE

- **If you turn the ignition switch to the “OFF” position with SRH turned off and then start the engine again, SRH will automatically turn on.**
- **When you turn the ignition switch to the “ON” position, the SRH OFF indicator will illuminate and turn off after several seconds.**

# Headlight beam leveler (if equipped)

## ■ Automatic headlight beam leveler (models with LED headlights)

The LED headlights produce more light than conventional halogen headlights.

When the vehicle is carrying a heavy load and the headlight beams are angled upwards, the driver of an oncoming vehicle may experience glare.

To prevent this, the automatic headlight beam leveler adjusts the headlights to the optimum height automatically depending on the load the vehicle is carrying.

## ■ Manual headlight beam leveler (models without LED headlights)

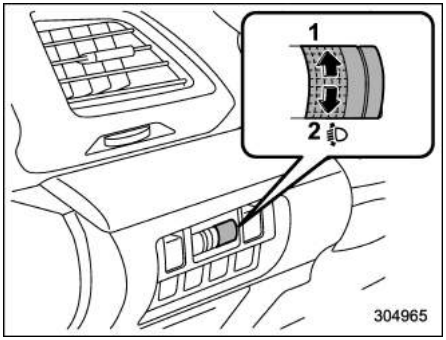


**Left-hand drive models**

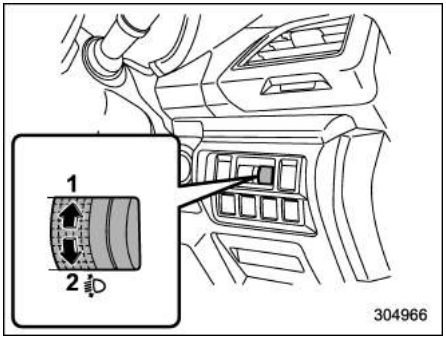


**Right-hand drive models**

1) Raises the level of the headlight beam
2) Lowers the level of the headlight beam

You can manually adjust the headlight beam level depending on the vehicle load balance. Increasing the dial position in the order of 0 to 5 will lower the headlight beam level.

Adjust the headlight beam level with the following dial positions according to the number of passengers and load condition.

– CONTINUED –

- Except Australia models:

| Dial position | Number of front seat occupants | Number of rear seat occupants | Load in the luggage compartment area |
|---|---|---|---|
| 0 | 1 or 2 | 0 | No load |
| 1 | 2 | 3 | No load |
| 2 | 2 | 3 | Full load* |
| 3 | 1 | 0 | Full load* |
| 4 to 5 | Use in special case | Use in special case | Use in special case |

*: Up to the maximum permissible weight

- For Australia models:

| Dial position | Number of front seat occupants | Number of rear seat occupants | Load in the luggage compartment area |
|---|---|---|---|
| 0 | 1 or 2 | 0 | No load |
| 1 | 2 | 3 | No load |
| 2 | 1 | 0 | Full load* |
| | 2 | 3 | Full load* |
| 3 to 5 | Use in special case | Use in special case | Use in special case |

*: Up to the maximum permissible weight

## NOTE

**Please use the appropriate dial position according to the above table. Otherwise, your vehicle may not light the road in front of your vehicle sufficiently or the surrounding vehicles may experience too much glare.**
**The “Use in special case” position should only be used in cases such as when driving on a sloped road and the headlights of your vehicle are lighting the mirror of vehicles in front of you or the windshield of oncoming vehicles.**

# Fog light switch

## ■ Front fog light switch (if equipped)

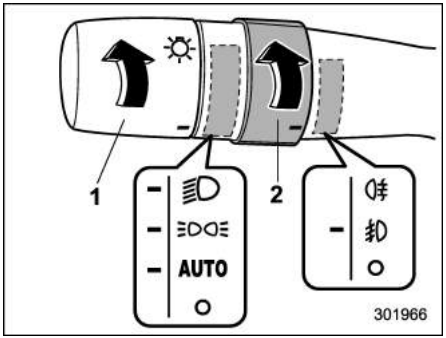


**Front fog light operating condition (except Australia models)**
1) Headlight switch
2) Fog light switch

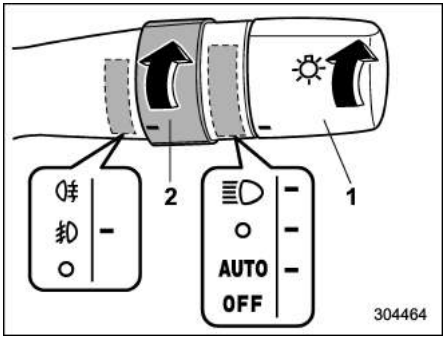


**Front fog light operating condition (Australia models)**
1) Headlight switch
2) Fog light switch

The front fog lights will turn on when the fog light switch is placed in the "" position while the headlights are in either of the following conditions.

- when the headlight switch is in the "" or "" position (except Australia models)
- when the headlight switch is in the "" or "" position (Australia models)
- for models with the auto on/off headlights, while the headlight switch is in the "AUTO" position and the headlights turn on automatically

To turn off the front fog lights, turn the switch back down to the following positions.

- "" position (except Australia models)
- "OFF" position (Australia models)

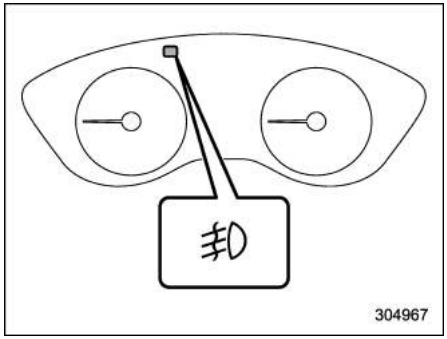


The indicator light on the combination meter will illuminate when the front fog lights are illuminated.

– CONTINUED –

## ■ Rear fog light switch (if equipped)

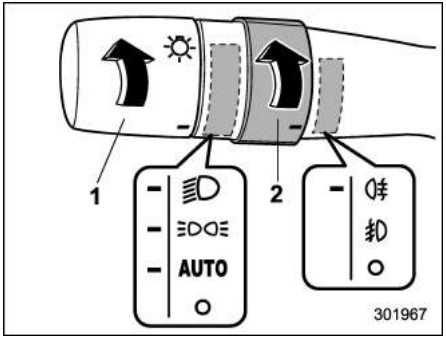


1) Headlight switch
2) Fog light switch

The rear fog light will turn on when the fog light switch is turned to the "" position while the headlights are in either of the following conditions.

- while the headlight switch is in the "" or "" position
- for models with the auto on/off headlights, while the headlight switch is in the "AUTO" position and the headlights turn on automatically

The switch will return to the "" position when released.

To turn off the rear fog light, perform either of the following procedures.

- Turn the fog light switch upward to the "" position again
- Turn the fog light switch downward to the "" position

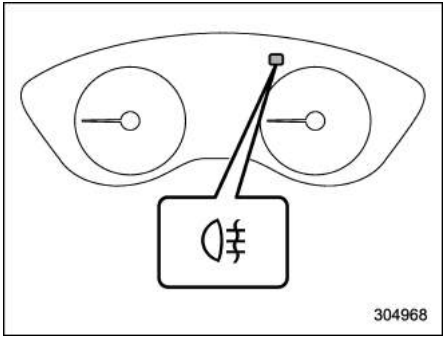


The indicator light on the combination meter will illuminate when the rear fog light is illuminated.

### NOTE

**To prevent switching off the rear fog light from being forgotten, the rear fog light circuit is designed so that it turns off whenever one of the following operations is performed.**

- **The headlight switch is set to either the "" or "" position.**
- **The headlight switch is set to the "AUTO" position and the headlights turn off (models with auto on/off headlights).**
- **The key is removed from the ignition switch (models without the "keyless access with push-button start system").**
- **The push-button ignition switch is turned off (models with the "keyless access with push-button start system").**

**However, this does not mean that the rear fog light illuminates when the headlight switch is set to "" position or the ignition switch is turned to "ON" position again. So, if you want to reilluminate the rear fog light, turn the fog light switch to the "" position.**

## Turn signal lever

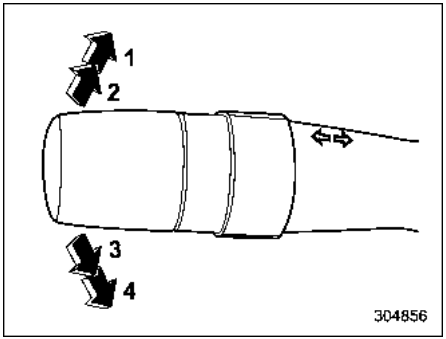


1) Right turn
2) Lane change right signal
3) Lane change left signal
4) Left turn

If the lever does not return after cornering, return the lever to the neutral position by hand.

To signal a lane change, push the turn signal lever clockwise or counterclockwise slightly and hold it during the lane change. The turn signal indicator lights will flash in the direction of the turn or lane change. The lever will return automatically to the neutral position when you release it.

### NOTE

**For models with a turn signal lever on the right side of the steering wheel, the pushing direction of the turn signal lever is the opposite of that described here.**

### ■ One-touch lane changer

To flash the turn signal and turn signal indicator light three times, push the turn signal lever clockwise or counterclockwise slightly and immediately release it.

### NOTE

**The operational/non-operational setting of the one-touch lane changer can be changed by a SUBARU dealer. We recommend that you contact the nearest SUBARU dealer for details.**

**For models with the combination meter display (color LCD), the setting can also be changed by operating the combination meter display (color LCD). For details, refer to "Vehicle Setting" ☞3-43.**

## Wiper and washer

**⚠ WARNING**

**In freezing weather, do not use the windshield washer until the windshield is sufficiently warmed by the defroster.**

**Otherwise the washer fluid can freeze on the windshield, blocking your view.**

**⚠ CAUTION**

- **Do not operate the washer continuously for more than 10 seconds, or when the washer fluid tank is empty. This may cause overheating of the washer motor. Check the washer fluid level frequently, such as at fuel stops.**
- **Do not operate the wipers when the windshield or rear window is dry. This may scratch the glass, damage the blade rubbers and might cause the wiper motor to fail. Before operating the wiper on a dry windshield or rear window, always use the windshield washer.**

– CONTINUED –

- In freezing weather, be sure that the blade rubbers are not frozen to the windshield or rear window before switching on the wipers. Attempting to operate the wiper with the blades frozen to the window glass could cause not only the blade rubbers to be damaged but also might cause the wiper motor to fail. If the blade rubbers are frozen to the window glass, be sure to operate the defroster, windshield wiper deicer (if equipped) or rear window defogger before turning on the wiper.
- If the wipers stop during operation because of ice or some other obstruction on the window, this might cause the wiper motor to fail even if the wiper switch is turned off. If this occurs, promptly stop the vehicle in a safe place, turn the ignition switch to the "LOCK"/"OFF" position and clean the window glass to allow proper wiper operation.
- Use clean water if windshield washer fluid is unavailable. In areas where water freezes in winter, use SUBARU Windshield Washer Fluid or the equivalent. Refer to "Windshield washer fluid" ☞11-33.

  Also, when driving the vehicle when there are freezing temperatures, use non-freezing type blade rubbers.
- Do not clean the blade rubbers with fuel or a solvent, such as paint thinner or benzine. This will cause deterioration of the blade rubbers.

For models with automatic rain sensing windshield wipers:

- When the wiper switch is in the "AUTO" position, do not touch the windshield near the rain light sensor and do not place a wet cloth on the windshield near the rain light sensor. Doing so may result in unexpected wiper operation and cause injury.
- When washing the vehicle, make sure that the wiper is turned off. Otherwise, the wipers may operate unexpectedly and cause injury.
- When having your vehicle washed in an automatic car wash, make sure that the wiper is turned off. Otherwise, the wipers may be damaged because they may operate unexpectedly and car wash brushes could become tangled around them.

## NOTE

- The windshield wiper motor is protected against overloads by a circuit breaker. If the motor operates continuously under an unusually heavy load, the circuit breaker may trip to stop the motor temporarily. If this happens, park your vehicle in a safe place, turn off the wiper switch, and wait for approximately 10 minutes. The circuit breaker will reset itself, and the wipers will again operate normally.
- Clean the blade rubbers and window glass periodically with a washer solution to prevent streaking, and to remove accumulations of road salt or road film. Operate the windshield washer for at least 1 second so that washer solution will be sprinkled all over the windshield or rear window.
- Grease, wax, insects or other material on the windshield or the blade rubber results in jerky wiper operation and streaking on the glass. If you cannot remove those streaks after operating the washer or if the wiper operation is jerky, clean the outer surface of the windshield or rear window

and the blade rubbers using a sponge or soft cloth with a neutral detergent or mild-abrasive cleaner. After cleaning, rinse the window glass and blade rubbers with clean water. The glass is clean if no beads form on the glass when you rinse with water.

- If you cannot eliminate the streaking even after following this procedure, replace the blade rubbers with new ones. For replacement instructions, refer to "Replacement of wiper blades" ☞11-33.

## NOTE

For models with automatic rain sensing windshield wipers:

- When the wiper switch is turned to the "AUTO" position while the ignition switch is in the "ON" position, the wipers will operate once. This indicates that the wiper switch is in the "AUTO" position.
- When the wiper switch is in the "AUTO" position, the following situations may occur.
  - The wipers may operate if the rain light sensor or the windshield is vibrated or objects such as, insects, dirt, mud, etc. are covering them. Turn off the wiper unless it is raining or snowing.
  - The wipers do not operate if the rain light sensor does not detect rain or snow. If necessary, push the wiper control lever down to the low speed position or high speed position.
  - The wipers may not operate properly if the rain light sensor does not detect the amount of raindrops because of the water-repellent coating on the windshield, or dirt or ice on the upper half of the windshield.
  - The rain light sensor may be malfunctioning if the wiper intermittent operation does not vary depending on the amount of rainfall. If necessary, turn the wiper switch to any position except for the "AUTO" position. We recommend that you contact your SUBARU dealer and have the system inspected as soon as possible.
  - The wipers stop operation if the ambient temperature decreases to −15°C (5°F) or lower. The wipers resume operation when the ambient temperature increases to −10°C (14°F) or higher. If you need to operate the wipers under −15°C (5°F), push the wiper control lever down to the low speed position or high speed position.
  - The wipers may not operate if the temperature around the rain light sensor is more than 80°C (176°F) because the system cannot detect the amount of raindrops under these temperatures.
- This system is also equipped with the vehicle speed interlocking intermittent wiper function. When the vehicle stops, the wiper operation interval will become longer compared with that while driving.
- This system may malfunction in a location with strong radio waves or noise.

– CONTINUED –

## ■ Windshield wiper and washer switches

The wiper operates only when the ignition switch is in the “ON” position.

### ▼ Windshield wipers (models with automatic rain sensing windshield wipers)

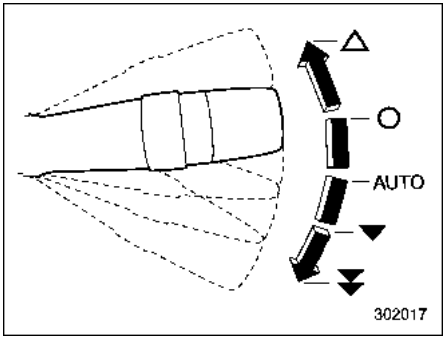


**Except Australia models**

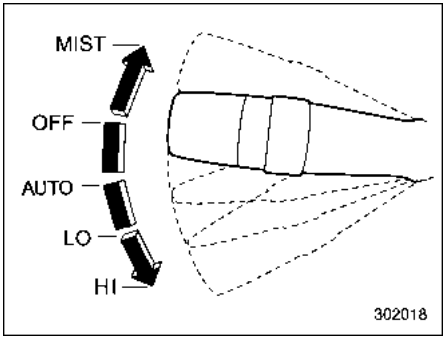


**Australia models**

△ / MIST: Mist (for a single wipe)
O / OFF: Off
AUTO / AUTO: Automatic operation
▼ / LO: Low speed
▼▼ / HI: High speed

To turn the wipers on, push the wiper control lever down. With the wiper switch in the “AUTO” position, the wipers operate automatically when the rain light sensor detects falling rain. The wiper timing is automatically adjusted depending on the amount of rain.

To turn the wipers off, return the lever to the “OFF”/“O” position.

For a single wipe of the wipers, push the lever up. The wipers operate until you release the lever.

## NOTE

**The automatic adjusting mode of the wiper timing can be changed from the rain-sensing mode to the vehicle speed interlocking mode. The setting can be changed by a SUBARU dealer. For more details, we recommend that you contact a SUBARU dealer.**

### ▽ Rain light sensor

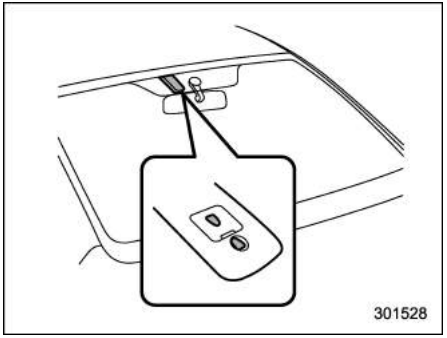


The rain light sensor is on the windshield glass.

### ▽ Sensor sensitivity control

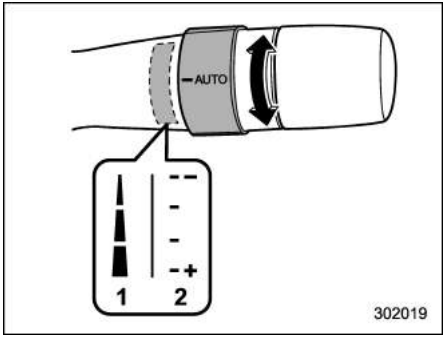


1) Except Australia models
2) Australia models

Turn the dial to adjust the sensitivity of the rain light sensor for wiper control. Turn the dial downward to increase the sensitivity. Turn the dial upward to decrease the sensitivity.

### ▼ Windshield wipers (models without automatic rain sensing windshield wipers)

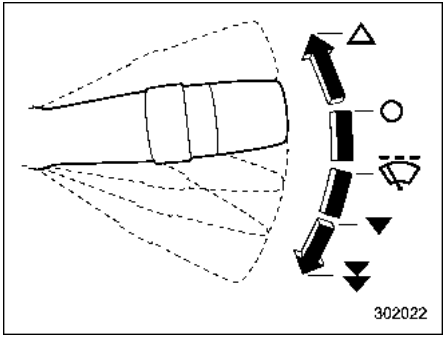


**Except Australia models**

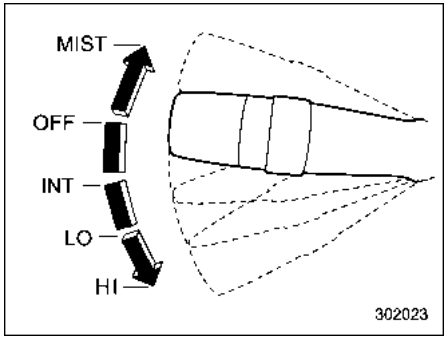


**Australia models**

△ / MIST: Mist (for a single wipe)
○ / OFF: Off
▽ / INT: Intermittent
▼ / LO: Low speed
⏬ / HI: High speed

To turn the wipers on, push the wiper control lever down.

To turn the wipers off, return the lever to the "○"/"OFF" position.

For a single wipe of the wipers, push the lever up. The wipers operate until you release the lever.

– CONTINUED –

### ▽ Wiper intermittent time control

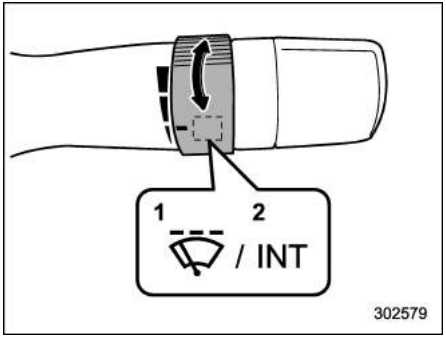


1) Except Australia models
2) Australia models

When the wiper switch is in the "▽"/"INT" position, turn the dial to adjust the operating interval of the wiper. The operating interval can be adjusted in several steps from the shortest interval to the longest.

### ▼ Windshield washer

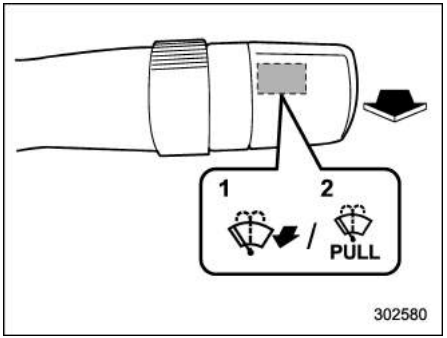


1) Except Australia models
2) Australia models

To wash the windshield, pull the wiper control lever toward you. The washer fluid sprays until you release the lever. The wipers operate while you pull the lever.

## NOTE

**If your vehicle is equipped with a headlight washer, pulling the wiper control lever for more than 1 second also causes the headlight washer to operate when the headlight switch is in the "" position. For further details, refer to "Headlight washer" ☞3-90.**

## NOTE

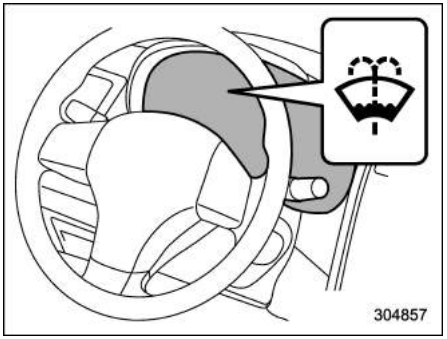


**Windshield washer fluid warning light**

**The light illuminates when the washer fluid level in the tank has dropped to the lower limit. If the warning light illuminates, refill the tank with fluid. For the refilling procedure, refer to "Windshield washer fluid" ☞11-32.**

## ■ Rear window wiper and washer switch

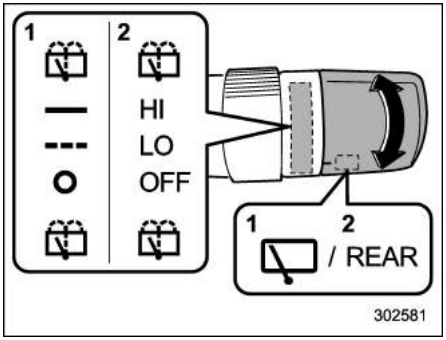


1) Except Australia models
2) Australia models

: Washer (accompanied by wiper operation)
▬ / HI: Continuous
- - - / LO: Intermittent
O / OFF: Off
: Washer (accompanied by wiper operation)

### ▼ Rear wiper

To turn the rear wiper on, turn the knob switch upward.

To turn the wiper off, return the knob switch to the "O"/"OFF" position.

With the switch turned to the "- - -"/"LO" position, the rear wiper will operate intermittently at intervals corresponding to the vehicle speed. In this position, when you move the select lever to the "R" (reverse) position, the rear wiper will switch to continuous operation. When you move the select lever from the "R" (reverse) position to another position, the rear wiper will return to intermittent operation.

**Reverse gear interlocked rear wiper:**

Even if the rear wiper switch is in the "O"/"OFF" position, if the front windshield wiper is operating continuously, the rear wiper will operate intermittently when you move the select lever to the "R" (reverse) position.

The factory setting (default setting) of the reverse gear interlocked rear wiper is "operational".

This setting can be changed by a SUBARU dealer. We recommend that you consult your SUBARU dealer for details.

**⚠ CAUTION**

**Do not attach anything that disturbs the rear wiper operation on the rear gate. Doing so may damage the rear wiper when it operates.**

### ▼ Washer

To wash the rear window while the rear wiper is operating, turn the knob switch upward to the "" position. The washer fluid sprays until you release the knob.

To wash the rear window when the rear wiper is not in use, turn the knob switch downward to the "" position. The washer fluid sprays and the wiper operates until you release the knob.

## Headlight washer (if equipped)

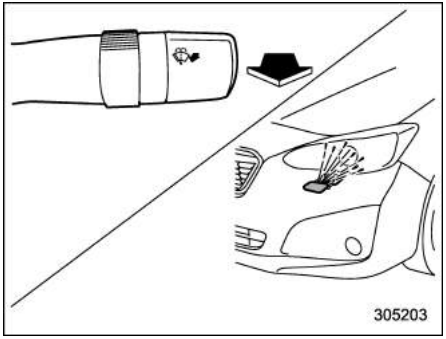


If you pull the wiper control lever toward you and hold it for more than 1 second with the ignition switch in the “ON” position, the headlight washer operates together with the windshield washer in the following conditions.

- when the light switch is in the “” position (except Australia models)
- when the light switch is in the “” position (Australia models)
- when the light switch is in the “AUTO” position and the headlights illuminate automatically (models with auto on/off headlights)

The windshield washer stops spraying washer fluid as soon as you release the wiper control lever. The headlight washer sprays the washer fluid for approximately 1 second and then stops automatically.

**CAUTION**

**Do not operate the washer if the washer fluid tank is empty. This may cause overheating of the washer motor. Check washer fluid level frequently, such as at fuel stops.**

### NOTE

**When the area around the nozzle cover of the headlight washer is frozen, remove the ice before using.**

## Mirrors

Always check that the inside and outside mirrors are properly adjusted before you start driving.

### ■ Inside mirror

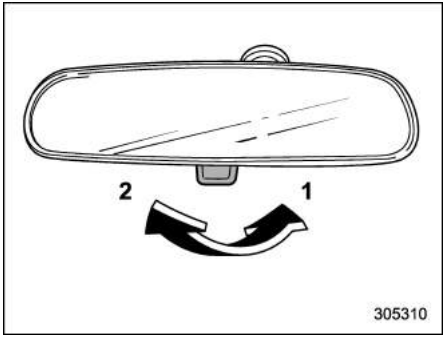


1) Normal position
2) Anti-glare position

Push the tab on the mirror for normal use. To reduce glare from the headlights of the vehicle behind you, pull the tab to the anti-glare position.

## ■ Auto-dimming mirror (if equipped)

**WARNING**

**To ensure safety, always adjust the mirrors and operate the switch before driving the vehicle. Perform the automatic dimming on/off operation only when necessary. Otherwise, an unexpected accident may occur.**

**CAUTION**

- **When cleaning the mirror, use a paper towel or similar material dampened with glass cleaner. Do not spray glass cleaner directly on the mirror because that may cause the liquid cleaner to enter the mirror housing and damage the mirror.**
- **Sensors detecting brightness are located in front of and behind the mirror. Do not attach any object such as a sticker on the sensor areas or put any object over the mirror.**

### ▼ How to use the auto-dimming mirror

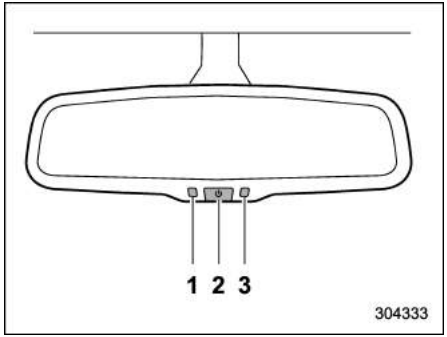


1) LED indicator
2) Automatic dimming on/off switch
3) Sensor

1. Move the main body of the auto-dimming mirror and adjust the position so that you can view the rearward direction sufficiently.
2. Press the automatic dimming on/off switch to turn the automatic dimming function on or off. When the automatic dimming function is on, the LED indicator will illuminate.

**NOTE**

- **Sensors are located in front of and behind the mirror.**
- **Even with the mirror in the automatic dimming mode, the mirror surface turns bright if the select lever is shifted into the "R" position. This is to ensure good rearward visibility during reversing.**

## ■ Outside mirrors

### ▼ Convex mirror

**WARNING**

**Objects look smaller in a convex mirror and farther away than when viewed in a flat mirror. Do not use the convex mirror to judge the distance of vehicles behind you when changing lanes. Use the inside mirror (or glance backwards) to determine the actual size and distance of objects that you view in convex mirror.**

– CONTINUED –

### ▼ Remote control mirror switch

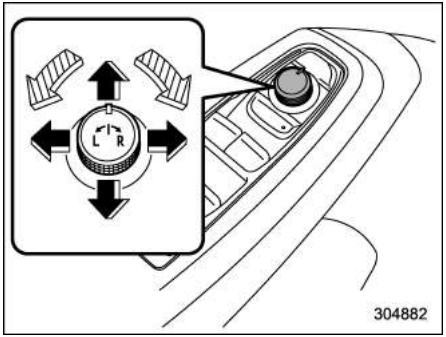


: Select side to adjust

: Direction control

The remote control mirrors operate only when the ignition switch is in the “ON” or “ACC” position.

1. Turn the control switch to the side that you want to adjust. “L” is for the left mirror, “R” is for the right mirror.
2. Move the control switch in the direction you want to move the mirror.
3. Return the control switch to the neutral position to prevent unintentional operation.

The mirrors can also be adjusted manually.

### ▼ Power folding mirror switch (if equipped)

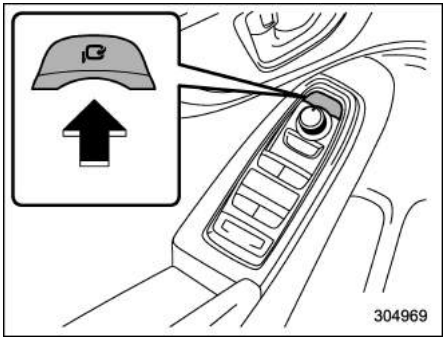


**Power folding mirror switch**

The power folding mirror switch operates only when the ignition switch is in the “ON” or “ACC” position.

To fold the outside mirrors, press the power folding mirror switch. To unfold the mirrors, press the switch again.

## NOTE

- **If the outside mirrors have been operated (folded or unfolded) manually, when you turn the ignition switch from the “LOCK/OFF” position to the “ACC” or “ON” position, the outside mirrors may be adjusted automatically depending on the status of the power folding mirror switch.**
- **If the outside mirrors have been manually folded slightly forward of the regularly unfolded position, when you turn the ignition switch from the “LOCK/OFF” position to the “ACC” or “ON” position, the outside mirrors may automatically fold further forward depending on the status of the power folding mirror switch. When this happens, press the power folding mirror switch. By doing so, the outside mirrors which have been folded to the furthest forward position will extend to the regularly unfolded position and then fold rearward in the usual way. In order to unfold the outside mirrors, press the switch again.**
- **When you unfold the outside mirrors manually, the mirrors may become wobbly. Be sure to unfold the mirrors by switch operation. If the outside mirrors are still wobbly, fold the mirrors again and then unfold them by switch operation.**
- **When the temperature is low, the outside mirrors may stop during switch operation. If that occurs, push the switch again. When the outside mirrors do not work by switch operation, move them several times manually. This makes it possible to operate them by switch operation.**

- **When you operate the power folding mirror switch continuously, it may not work. This is not a malfunction. Operate the switch again after waiting for a short period of time.**

## Defogger and deicer

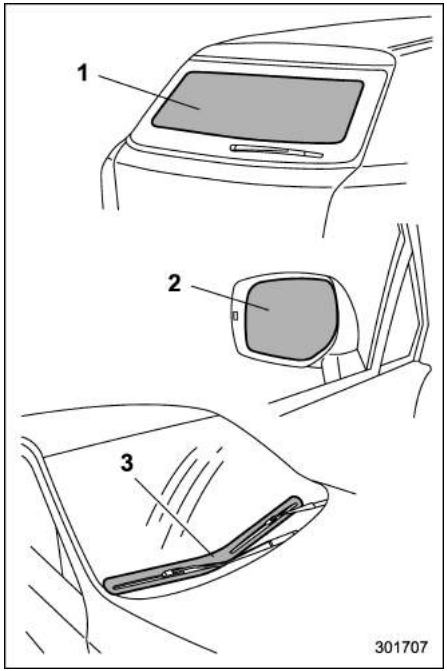


1) Rear window defogger
2) Outside mirror defogger (if equipped)
3) Windshield wiper deicer (if equipped)

The vehicle is equipped with a rear window defogger. Some models are also equipped with an outside mirror defogger and/or windshield wiper deicer. The defogger and deicer system is activated only when the ignition switch is in the “ON” position.

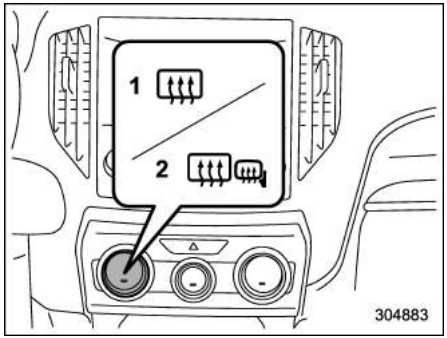


**Type A climate control system**

1) Models without outside mirror defogger
2) Models with outside mirror defogger

– CONTINUED –

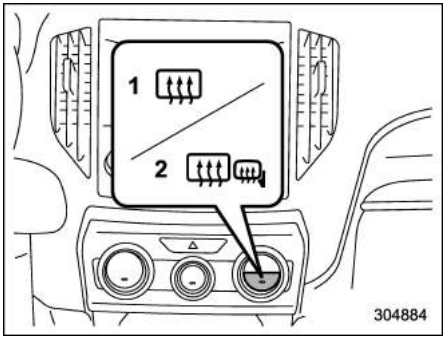


**Type B and C climate control system**
1) Models without outside mirror defogger
2) Models with outside mirror defogger

To activate the defogger and deicer system, press the control switch that is located on the climate control panel. The rear window defogger, outside mirror defogger and windshield wiper deicer are activated simultaneously. The indicator light on the control switch illuminates while the defogger and deicer system is activated.

To turn them off, press the control switch again. They also turn off when the ignition switch is turned to the “ACC” or “LOCK”/ “OFF” position.

The defogger and deicer system will automatically shut off after approximately 15 minutes. If the rear window and the outside mirrors have been cleared and the windshield blade rubbers have been deiced completely before that time, press the control switch to turn them off. If defrosting, defogging or deicing is not complete, you have to press the control switch to turn them on again.

**For models with the automatic climate control system,** it is possible for the defogger and deicer system to be set to continuous operation mode by a SUBARU dealer. We recommend that you consult your SUBARU dealer for details. Also, for models with a combination meter display (color LCD), it is possible to set the defogger and deicer system for the continuous operation mode. For details, refer to “Vehicle Setting” ☞3-43.

**⚠ CAUTION**

- **To prevent the battery from being discharged, do not operate the defogger and deicer system continuously for any longer than necessary.**
- **Do not use sharp instruments or window cleaner containing abrasives to clean the inner surface of the rear window. They may damage the conductors printed on the window.**

## NOTE

- **Turn on the defogger and deicer system if the wipers are frozen to the windshield.**
- **If the windshield is covered with snow, remove the snow so that the windshield wiper deicer works effectively.**
- **While the defogger and deicer system is in the continuous operation mode:**
  - **If the vehicle speed remains at 15 km/h (9 mph) or lower for 15 minutes, the windshield wiper deicer stops operating. However, the rear window defogger and outside mirror defogger maintain continuous operation.**
  - **If the battery voltage drops below the permissible level, the defogger and deicer system stops operating.**

## Tilt/telescopic steering wheel

**WARNING**

- **Do not adjust the steering wheel tilt/telescopic position while driving. This may cause loss of vehicle control and result in personal injury.**
- **If the lever cannot be raised to the fixed position, adjust the steering wheel again. It is dangerous to drive without locking the steering wheel. This may cause loss of vehicle control and result in personal injury.**

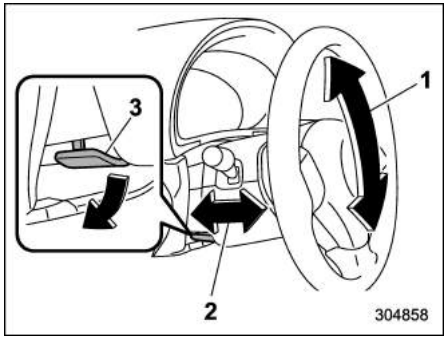


1) Tilt adjustment
2) Telescopic adjustment
3) Tilt/telescopic lock lever

1. Adjust the seat position. Refer to “Front seats” ☞1-5.
2. Pull the tilt/telescopic lock lever down.
3. Move the steering wheel to the desired level.
4. Pull the lever up to lock the steering wheel in place.
5. Make sure that the steering wheel is securely locked by moving it up and down, and forward and backward.

## Heated Steering Wheel system (if equipped)

The Heated Steering Wheel system warms the steering wheel at a constant temperature.

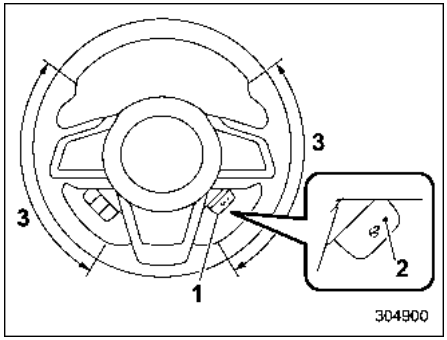


1) Heated Steering Wheel switch
2) Indicator light
3) Heated area

To turn on the Heated Steering Wheel system, pull the Heated Steering Wheel switch when the ignition switch is in the “ON” or “ACC” position. Then the steering wheel will be warmed and the indicator light on the switch will illuminate. To turn off the Heated Steering Wheel system, pull the switch again. Then the indicator light will turn off.

– CONTINUED –

**CAUTION**

- **Use the Heated Steering Wheel system with the engine running. Otherwise, the battery voltage may drop below the permissible level and it may not be possible to start the engine.**
- **There is a possibility that people with delicate skin may suffer slight burns even at low temperatures if they use the Heated Steering Wheel for a long period of time. When using the Heated Steering Wheel, always be sure to warn the persons concerned.**
- **Do not cover the Heated Steering Wheel with an object such as a steering wheel cover. Doing so may cause the Heated Steering Wheel to overheat.**

**NOTE**

- **If the surface temperature of the steering wheel is approximately more than 40°C (104°F) when the switch is turned on, the indicator light will illuminate, but the system will not heat the steering wheel.**
- **The Heated Steering Wheel system will automatically turn off approximately 30 minutes after the system has been turned on.**

## Horn

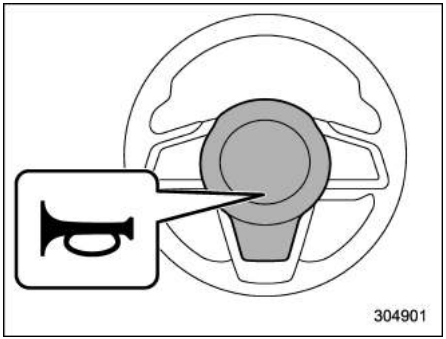


To sound the horn, push the horn pad.

Ventilator control ..... 4-2
Center and side ventilators ..... 4-2
Climate control panel ..... 4-2
Type A ..... 4-3
Type B ..... 4-4
Type C ..... 4-5
Automatic climate control operation ..... 4-6
Type A ..... 4-6
Type B and C ..... 4-6
Sensors ..... 4-7
Manual climate control operation ..... 4-8
Airflow mode selection ..... 4-8
MAX A/C mode (type B and C) ..... 4-9
Temperature control ..... 4-9
Fan speed control ..... 4-10
Air conditioner control ..... 4-10
Air inlet selection ..... 4-10
To turn off the climate control system ..... 4-10
Defrosting ..... 4-11
Operating tips for heater and air conditioner ..... 4-11
Cleaning ventilation grille ..... 4-11
Efficient cooling after parking in direct sunlight ..... 4-12
Lubrication oil circulation in the refrigerant circuit ..... 4-12
Checking air conditioning system before summer season ..... 4-12
Cooling and dehumidifying in high humidity and low temperature weather conditions ..... 4-12
Air conditioner compressor shut-off when engine is heavily loaded ..... 4-12
Refrigerant for your climate control system ..... 4-12
Air filtration system ..... 4-13
Replacing a cabin air filter ..... 4-13

## Ventilator control

### ■ Center and side ventilators

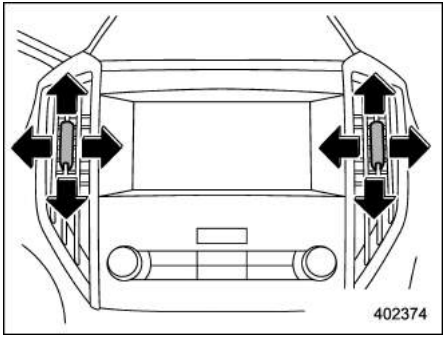


**Center ventilators**

To adjust the airflow direction, move the tab. To close the ventilator, move the tab all the way down.

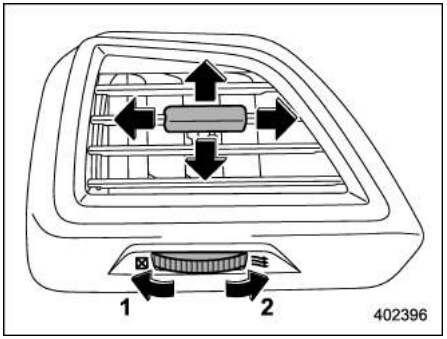


**Side ventilators**

1) Close
2) Open

To adjust the flow direction, move the tab.

## Climate control panel

**⚠ WARNING**

- **The cooling function operates only when the engine is running.**
- **Do not leave children or adults who would normally require the support of others alone in your vehicle. Pets should not be left alone either. On hot, sunny days, temperatures in a closed vehicle could quickly become high enough to cause severe or possibly fatal injuries to people or animals.**

## ■ Type A

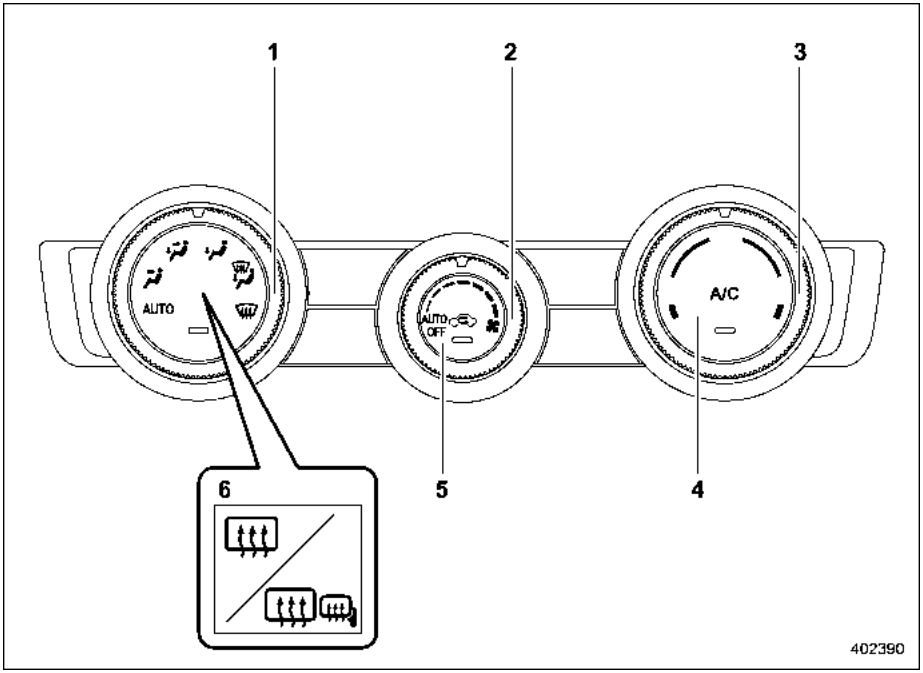


1) Airflow mode selection dial (Refer to “Automatic climate control operation” ☞4-6 and/or “Airflow mode selection” ☞4-8.)
2) Fan speed control dial (Refer to “Automatic climate control operation” ☞4-6 and/or “Fan speed control” ☞4-10.)
3) Temperature control dial (Refer to “Automatic climate control operation” ☞4-6 and/or “Temperature control” ☞4-9.)
4) Air conditioner button (Refer to “Air conditioner control” ☞4-10.)
5) Air inlet selection button (Refer to “Air inlet selection” ☞4-10.)
6) Rear window defogger button and mirror heater button (if equipped) (Refer to “Defogger and deicer” ☞3-93.)

## NOTE

**The controllable temperature range may vary depending on the regional specifications of the vehicle.**

– CONTINUED –

## ■ Type B

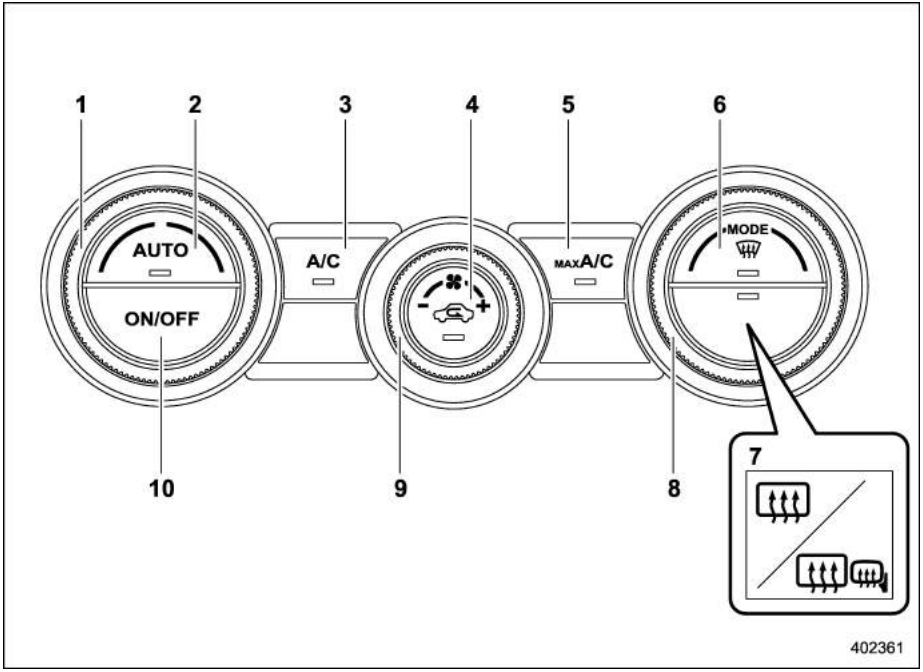


1) Temperature control dial (Refer to “Automatic climate control operation” ☞4-6 and/or “Temperature control” ☞4-9.)
2) AUTO button (Refer to “Automatic climate control operation” ☞4-6.)
3) Air conditioner button (Refer to “Air conditioner control” ☞4-10.)
4) Air inlet selection button (Refer to “Air inlet selection” ☞4-10.)
5) MAX A/C button (Refer to “MAX A/C mode (type B and C)” ☞4-9.)
6) Defroster button (Refer to “Defrosting” ☞4-11.)
7) Rear window defogger button and outside mirror defogger button (if equipped) (Refer to “Defogger and deicer” ☞3-93.)
8) Airflow mode selection dial (Refer to “Airflow mode selection” ☞4-8.)
9) Fan speed control dial (Refer to “Fan speed control” ☞4-10.)
10) ON/OFF button (Refer to “Automatic climate control operation” ☞4-6.)

## NOTE

- **The illustration on the left is a typical example for left-hand drive models. For right-hand drive models, the locations of some buttons/dials are different to that shown in the illustration.**
- **The climate control screen is displayed on the multi-function display (color LCD). Refer to “Climate control screen” ☞3-53.**

## ■ Type C

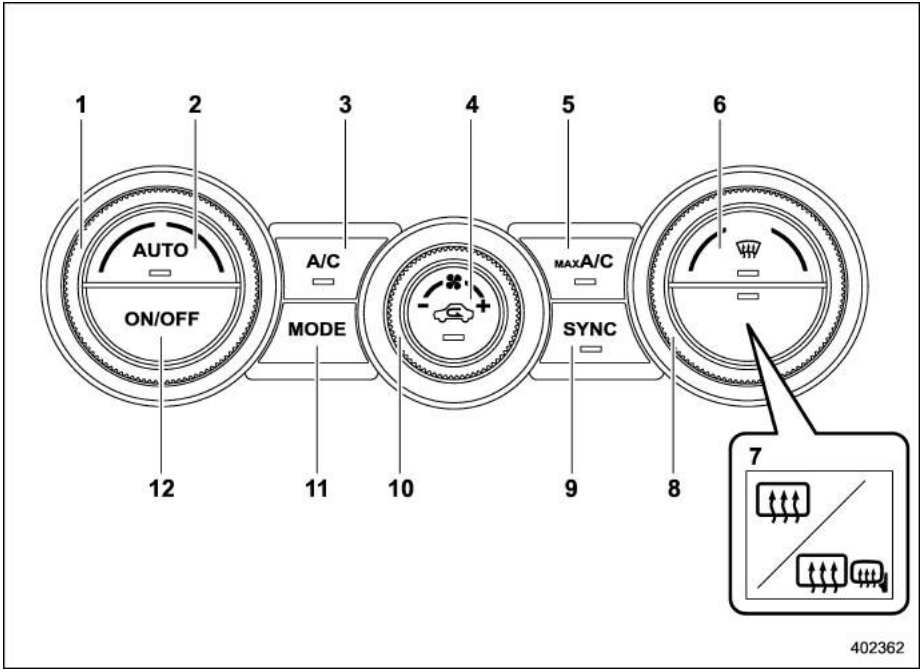


1) Temperature control dial (left-hand side) (Refer to “Automatic climate control operation” ☞4-6 and/or “Temperature control” ☞4-9.)
2) AUTO button (Refer to “Automatic climate control operation” ☞4-6.)
3) Air conditioner button (Refer to “Air conditioner control” ☞4-10.)
4) Air inlet selection button (Refer to “Air inlet selection” ☞4-10.)
5) MAX A/C button (Refer to “MAX A/C mode (type B and C)” ☞4-9.)
6) Defroster button (Refer to “Defrosting” ☞4-11.)
7) Rear window defogger button and outside mirror defogger button (if equipped) (Refer to “Defogger and deicer” ☞3-93.)
8) Temperature control dial (right-hand side) (Refer to “Temperature control” ☞4-9.)
9) SYNC button (Refer to “SYNC mode (type C)” ☞4-9.)
10) Fan speed control dial (Refer to “Fan speed control” ☞4-10.)
11) Airflow mode selection button (Refer to “Airflow mode selection” ☞4-8.)
12) ON/OFF button (Refer to “Automatic climate control operation” ☞4-6.)

## NOTE

- **The illustration on the left is a typical example for left-hand drive models. For right-hand drive models, the locations of some buttons/dials are different to that shown in the illustration.**
- **The climate control screen is displayed on the multi-function display (color LCD). Refer to “Climate control screen” ☞3-53.**

## Automatic climate control operation

When this mode is selected, the fan speed, airflow distribution, air-inlet control, and air conditioner compressor operation are automatically controlled. To activate this mode, perform the following.

### NOTE

- **Operate the automatic climate control system when the engine is running.**
- **Even when cooling is not necessary, the air conditioner compressor will automatically turn on if the temperature is set much lower than the current outlet air temperature. Even in this case, the "A/C" indicator light on the control panel illuminates.**
- **The air conditioner may not operate in the following cases:**
  - **when the cabin temperature is low**
  - **when the ambient temperature decreases close to 0°C (32°F)**
- **The controllable temperature range may vary depending on the regional specifications of the vehicle.**

### ■ Type A

1. Turn the airflow mode selection dial and fan speed control dial to the "AUTO" position.
2. Set the preferred temperature using the temperature control dial.

### NOTE

**Each function can be individually set to the "AUTO" mode independently of the other functions. Any function set to the "AUTO" mode is controlled automatically. Any function not set to the "AUTO" mode can be manually adjusted as desired.**

To turn off the climate control system, turn the fan speed control dial to the "OFF" position. The status of the air inlet selection will be changed as follows depending on the setting when the climate control system is turned off.

- When the air inlet selection is in "AUTO" mode, the mode will be set to outside air inlet.
- When the air inlet selection is in "MANUAL" mode, the mode from before the climate control system was turned off will be maintained.

### ■ Type B and C

1. Press the AUTO button. The indicator light "FULL AUTO" on the multi-function display (color LCD) illuminates.
2. Set the preferred temperature using the temperature control dial.

### NOTE

**If you operate any of the buttons on the control panel other than the ON/OFF button, rear window defogger button, SYNC button (if equipped) and temperature control dial(s) during FULL AUTO mode operation, the "FULL" indicator light on the control panel will turn off and the "AUTO" indicator light will remain illuminated. You can then manually control the system as desired using the button you operated. To change the system back to the "FULL AUTO" mode, press the "AUTO" button.**

To turn off the climate control system, press the ON/OFF button. The status of the air inlet selection will be changed as follows depending on the setting when the climate control system is turned off.

- When the air inlet selection is in "AUTO" mode, the mode will be set to outside air inlet.

● When the air inlet selection is in “MANUAL” mode, the mode from before the climate control system was turned off will be maintained.

## ■ Sensors

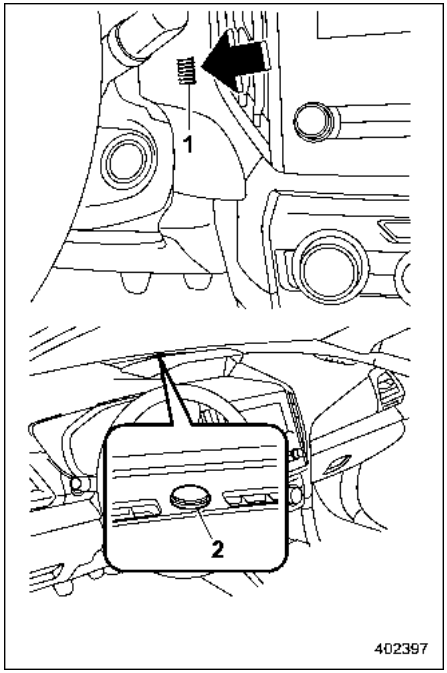


1) Interior air temperature sensor
2) Solar sensor

The automatic climate control system employs several sensors. These sensors are delicate. If they are not treated properly and become damaged, the system may not be able to control the interior temperature correctly. To avoid damaging the sensors, observe the following precautions.

– Do not subject the sensors to impact.
– Keep water away from the sensors.
– Do not cover the sensors.

# Manual climate control operation

## ■ Airflow mode selection

Select the airflow mode by using the airflow mode selection dial (type A) or the airflow mode selection button (type B and C).

Airflow modes are as follows.

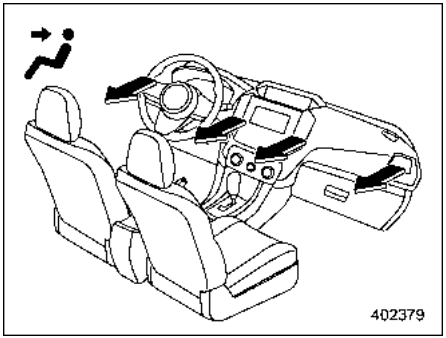


**Ventilation:** Instrument panel outlets

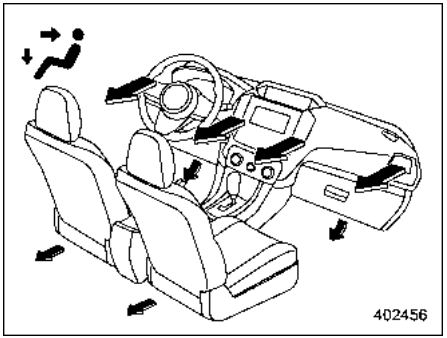


**Ventilation 2 for type B and C:** Instrument panel outlets and foot outlets

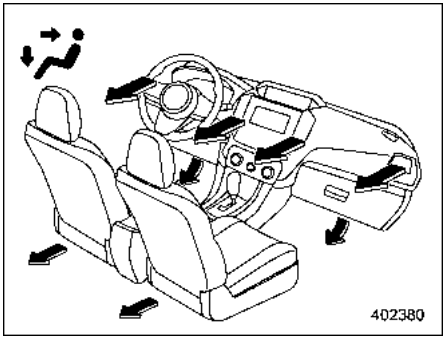


**Bi-level:** Instrument panel outlets and foot outlets

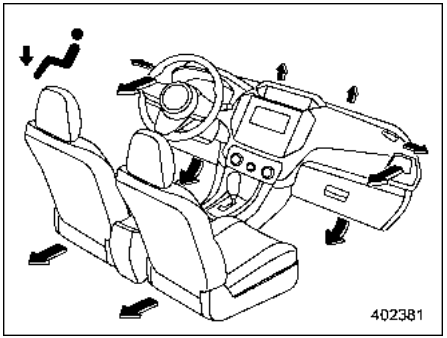


**Heat:** Foot outlets, both side outlets of the instrument panel and some through windshield defroster outlets (A small amount of air flows to the windshield and both side windows to prevent fogging.)

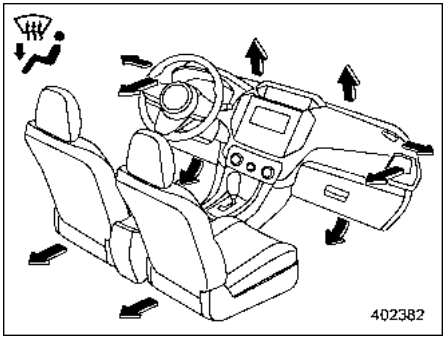


**Heat-def:** Windshield defroster outlets, foot outlets and both side outlets of the instrument panel (Refer to “Defrosting” ☞4-11.)

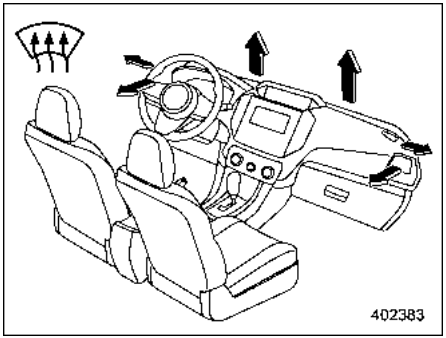


**Defrost for type A:** Windshield defroster outlets and both side outlets of the instrument panel. (Refer to “Defrosting” ☞4-11.)

## ■ MAX A/C mode (type B and C)

For quicker cooling, press the MAX A/C button.

When the MAX A/C mode is on, the following settings will be changed automatically.

- The air conditioner will turn on.
- The temperature will be set on the lowest.
- The fan speed will be set on the maximum speed.
- The air inlet will be set to recirculation.
- The air flow mode setting will be set to ventilation mode.

To turn off MAX A/C mode and return the previous setting, press the MAX A/C button again.

## ■ Temperature control

Turn the temperature control dial to set the preferred interior temperature.

### NOTE

**The controllable temperature range may vary depending on the regional specifications of the vehicle.**

#### ▼ SYNC mode (type C)

When the SYNC mode is turned on, both the driver’s and passenger’s side temperatures are synchronized using the driver’s side temperature control dial.

Press the SYNC button to turn on the SYNC mode. The SYNC button indicator will illuminate.

Press the SYNC button again or turn the passenger’s side temperature control dial to cancel the SYNC mode. The SYNC button indicator will not illuminate. In this case, temperature control on the driver’s side and passenger’s side is separated. The temperature will be controlled individually using the driver’s and passenger’s temperature control dials.

– CONTINUED –

## ■ Fan speed control

Select the preferred fan speed by turning the fan speed control dial.

## ■ Air conditioner control

The air conditioner operates only when the engine is running.

Press the air conditioner button while the fan is in operation to turn on the air conditioner. When the air conditioner is on, the “A/C” indicator light illuminates.

To turn off the air conditioner, press the button again.

### NOTE

**For efficient defogging or dehumidifying in cold weather, turn on the air conditioner. However, if the ambient temperature decreases to approximately 0°C (32°F), the air conditioner and dehumidification system may not operate properly.**

## ■ Air inlet selection

Select the air inlet by pressing the air inlet selection button.

- Recirculation:

When the indicator light on the air inlet selection button illuminates, interior air is recirculated inside the vehicle. Press the air inlet selection button to the ON position for fast cooling with the air conditioner or when driving on a dusty road.

- Outside air circulation:

When the indicator light on the air inlet selection button does not illuminate, outside air is drawn into the passenger compartment. Press the air inlet selection button to the OFF position when the interior has cooled to a comfortable temperature and the road is no longer dusty.

**⚠ WARNING**

**Continued operation in the ON position may fog up the windows. Switch to the OFF position as soon as the outside conditions are no longer dusty.**

### NOTE

- **When the indicator light on the air inlet selection button is flashing at engine starting, a malfunction might be occurring in the electrical system. We recommend that you contact your SUBARU dealer for inspection.**
- **The indicator light on the air inlet selection button may flash in the following cases. However, this does not indicate a malfunction.**
  - **After the vehicle battery has been disconnected and reconnected.**
  - **When the vehicle battery voltage is low.**

## ■ To turn off the climate control system

To turn off the climate control system:

- Type A: select the “OFF” position using the fan speed control dial.
- Type B and C: press the ON/OFF button.

## Defrosting

This function is selected to defrost or dehumidify the windshield and front door windows.

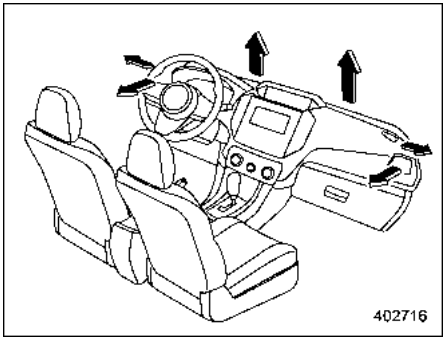


To turn on the defrost mode:

- Type A: select the "" or "" position using the airflow mode selection dial.
- Type B: press the defroster button, or select the "" position using the airflow mode selection dial.
- Type C: press the defroster button, or select the "" position using the airflow mode selection button.

## NOTE

**For type B and C climate control system, after defrosting the windshield by pressing the defroster button, pressing the button again returns the system to the setting that had been selected before the defroster was activated.**

## Operating tips for heater and air conditioner

### ■ Cleaning ventilation grille

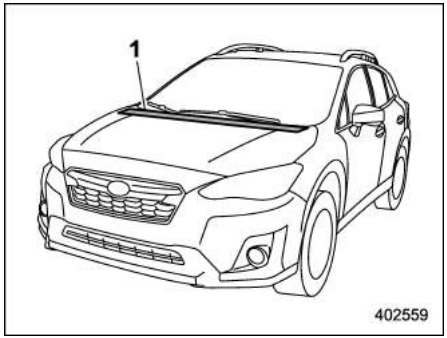


1) Front ventilation inlet grille

Always keep the front ventilation inlet grille free of snow, leaves, or other obstructions to ensure efficient heating and defrosting. Since the condenser is located in front of the radiator, this area should be kept clean because cooling performance is impaired by any accumulation of insects and leaves on the condenser.

– CONTINUED –

## ■ Efficient cooling after parking in direct sunlight

After parking in direct sunlight, drive with the windows open for a few minutes to allow outside air to circulate into the heated interior. This results in quicker cooling by the air conditioner. Keep the windows closed during the operation of the air conditioner for maximum cooling efficiency.

## ■ Lubrication oil circulation in the refrigerant circuit

Operate the air conditioner compressor at a low engine speed (at idle or low driving speeds) a few minutes each month during the off-season to circulate its oil.

## ■ Checking air conditioning system before summer season

Check the air conditioner unit for refrigerant leaks, hose conditions, and proper operation each spring. We recommend that you have your SUBARU dealer perform this check.

## ■ Cooling and dehumidifying in high humidity and low temperature weather conditions

Under certain weather conditions (high relative humidity, low temperatures, etc.) a small amount of water vapor emission from the air outlets may be noticed. This condition is normal and does not indicate any problem with the air conditioning system.

## ■ Air conditioner compressor shut-off when engine is heavily loaded

To improve acceleration and fuel consumption, the air conditioner compressor is designed to temporarily shut off during air conditioner operation whenever the accelerator pedal is fully depressed such as during rapid acceleration or when driving on a steep upgrade.

## ■ Refrigerant for your climate control system

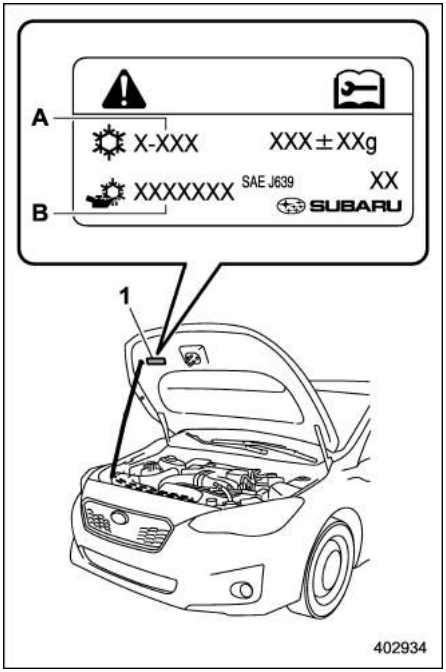


**Example of air conditioner label**

1) Air conditioner label
A) Name of refrigerant
B) Name of compressor oil

Your air conditioner uses ozone friendly refrigerant R-1234yf or R134a. Therefore, the method for adding, changing or checking the refrigerant is different from the method for CFC12 (freon). Also, the methods for adding, changing or checking R-1234yf and R134a refrigerant are different. Before adding, changing or checking the refrigerant, check the air conditioner label in the location shown in the illustration to confirm which type of refrigerant is used in your vehicle. We recommend that you consult your SUBARU dealer for service. Repairs needed as a result of using the wrong refrigerant are not covered under the warranty.

## Air filtration system

Replace the cabin air filter according to the maintenance schedule. Refer to “Maintenance schedule” ☞11-3. The schedule should be followed to maintain the filter’s dust collection ability. Under extremely dusty conditions, the filter should be replaced more frequently. It is recommended that you have your filter checked or replaced by your SUBARU dealer. For replacement, we recommend that you use only a genuine SUBARU air filter kit.

**⚠ CAUTION**

**We recommend that you contact your SUBARU dealer if the following occurs, even if it is not yet time to change the filter:**

- **Reduction of the airflow through the vents.**
- **Windshield gets easily fogged or misted.**

### NOTE

**The filter can influence the air conditioning, heating and defroster performance if not properly maintained.**

### ■ Replacing a cabin air filter

1. Remove the glove box.
   (1) Open the glove box.

### NOTE

**We recommend that you take measures to protect the center console with masking tape first, so that you avoid scratching the center console with the glove box.**

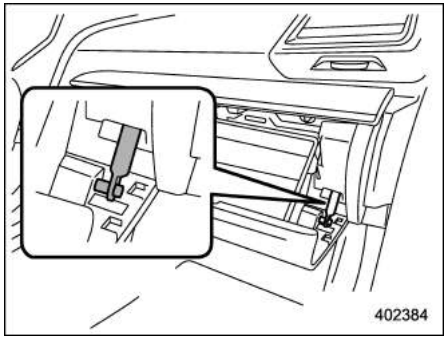


(2) Remove the damper shaft from the glove box.

– CONTINUED –

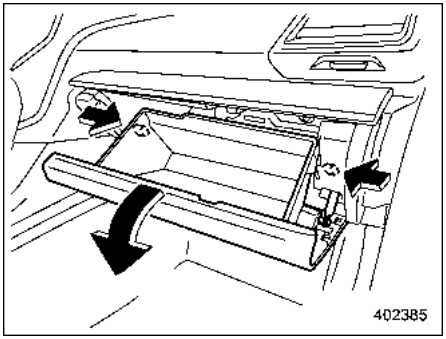


(3) Push in the stoppers located on both sides of the glove box and then pull down the glove box as far as it will go.

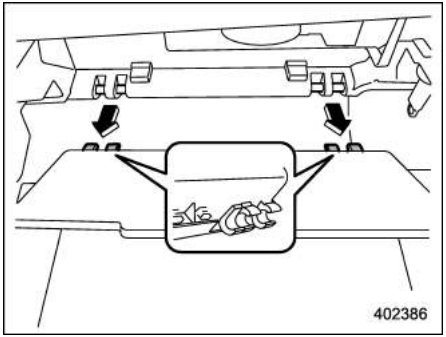


(4) Pull out the glove box horizontally and remove the hinge portion. When doing this, be careful not to damage the hinge.

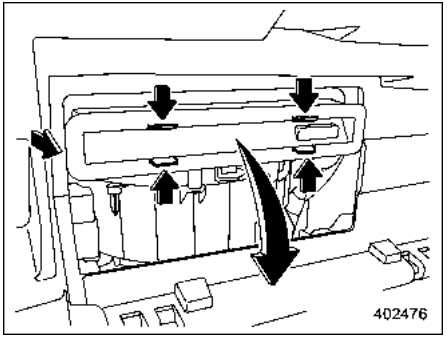


2. Remove the cabin air filter according to the following procedure in order to prevent dust on the air cleaner from falling to the inside of its housing.

(1) Push in the four stoppers to unlock, and then slowly pull out the filter 1 cm (0.4 in) from the housing.

(2) Completely pull out the filter by gently tilting the front side of the filter downward.

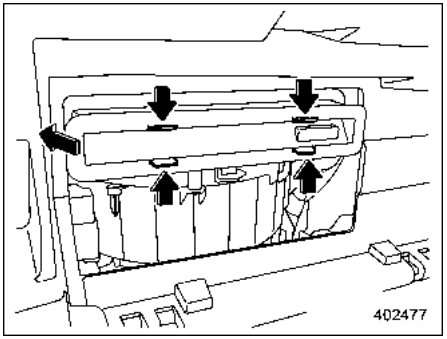


3. Replace the cabin air filter with a new one.

**⚠ CAUTION**

**The arrow mark on the filter must point UP.**

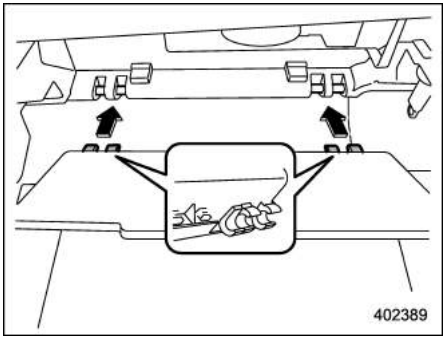


4. Reinstall the glove box, and connect the damper shaft.
5. Close the glove box.

Antenna ..... 5-2
Roof antenna ..... 5-2

Audio set ..... 5-2

# Antenna

## ■ Roof antenna

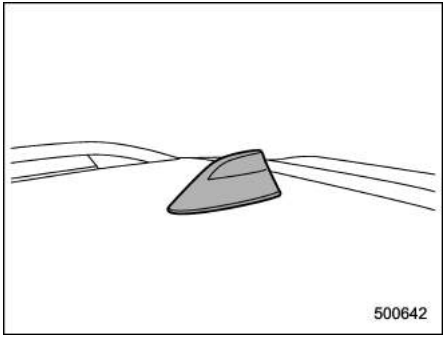


The roof antenna is installed on the roof.

# Audio set

**⚠ CAUTION**

- **Always consult your SUBARU dealer before installing a citizen band radio or other transmitting device in your vehicle. Such devices may cause the electronic control system to malfunction if they are incorrectly installed or if they are not suited for the vehicle.**
- **To prevent the battery from being discharged, do not leave the audio/visual system on when the engine is not running.**

If your vehicle is equipped with a genuine SUBARU navigation system or audio system, refer to the separate navigation/audio Owner's Manual for details.

Interior light ..... 6-2
Map lights ..... 6-2
Dome light ..... 6-2
Cargo area light ..... 6-3
OFF delay timer ..... 6-3
Sun visors ..... 6-3
Vanity mirror ..... 6-4
Vanity mirror with light (if equipped) ..... 6-4
Storage compartment ..... 6-4
Glove box ..... 6-5
Center console ..... 6-5
Cup holders ..... 6-5
Bottle holders ..... 6-6
Accessory power outlets ..... 6-7
Cigarette lighter (if equipped) ..... 6-8
USB power supply ..... 6-9
Ashtray (if equipped) ..... 6-11
Floor mat ..... 6-11
Coat hook ..... 6-12
Shopping bag hook ..... 6-13
Cargo area cover (if equipped) ..... 6-13
Using the cover ..... 6-13
To remove the cover housing ..... 6-14
Stowage of the cargo area cover ..... 6-14
To install the cover housing ..... 6-15
Cargo tie-down hooks (if equipped) ..... 6-15
Under-floor storage compartment (if equipped) ..... 6-16

# Interior light

**CAUTION**

**When leaving your vehicle, make sure the lights are turned off to avoid battery discharge.**

## ■ Map lights

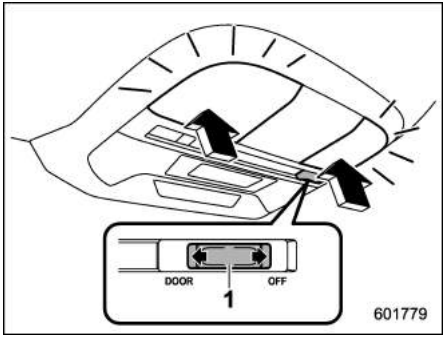


1) Door interlock switch

To turn on the map light, push the lens. To turn it off, push the lens again.

### ▼ Automatic illumination

When the door interlock switch is in the "DOOR" position, the map lights illuminate automatically in the following cases.

- Any of the doors other than the rear gate is opened.
- The doors are unlocked using the keyless access function (if equipped). Refer to "Locking and unlocking by holding the access key fob" ☞2-6.
- The doors are unlocked using the remote keyless entry system. Refer to "Remote keyless entry system" ☞2-15.
- The ignition switch is turned from the "ACC" position to the "LOCK"/"OFF" position.

## ■ Dome light

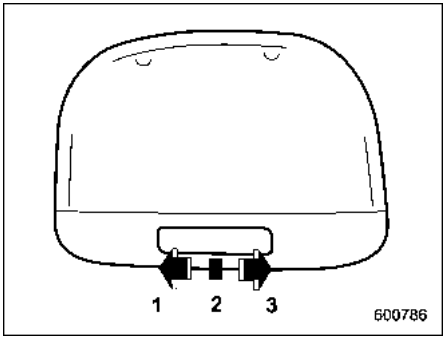


1) ON
2) DOOR
3) OFF

The dome light switch has the following positions.

**ON:** The light remains on continuously.

**OFF:** The light remains off.

**DOOR:** The dome light illuminates automatically in the following cases.

- Any of the doors or the rear gate is opened.
- The doors or the rear gate are unlocked using the keyless access function (if equipped). Refer to "Locking and unlocking by holding the access key fob" ☞2-6.

- The doors or the rear gate are unlocked using the remote keyless entry system. Refer to “Remote keyless entry system” ☞2-15.
- The ignition switch is turned from the “ACC” position to the “LOCK”/“OFF” position.

## ■ Cargo area light

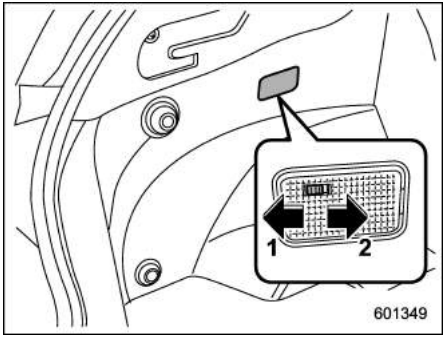


1) DOOR
2) OFF

**DOOR:** The light illuminates when the rear gate is opened. The light remains illuminated for several seconds and gradually turns off after the rear gate is closed.

**OFF:** The light remains off.

## ■ OFF delay timer

The following lights have an automatic illumination function.

- dome light
- map light
- cargo area light

When the interior light switch is set to the “DOOR” position, the light will automatically turn on and turn off depending on the locking and unlocking of the doors, the opening and closing of the doors, as well as the position of the ignition switch.

### NOTE

**The setting for the period of time in which the lights remain on (OFF delay timer) can be changed by a SUBARU dealer. We recommend that you contact your SUBARU dealer for details. For models with the combination meter display (color LCD), the setting can also be changed by operating the combination meter display (color LCD). For details, refer to “Vehicle Setting” ☞3-43.**

# Sun visors

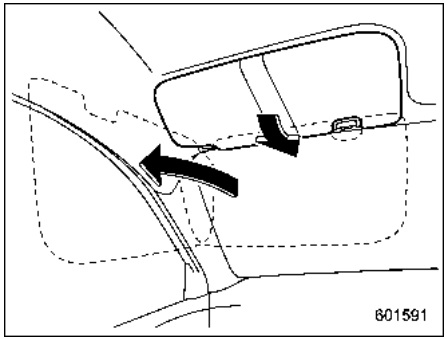


To block out glare, swing down the visors.

To use the sun visor at a side window, swing it down and move it sideways.

– CONTINUED –

## ■ Vanity mirror

**⚠ CAUTION**

**Keep the vanity mirror cover closed while the car is being driven to avoid being blinded by glare.**

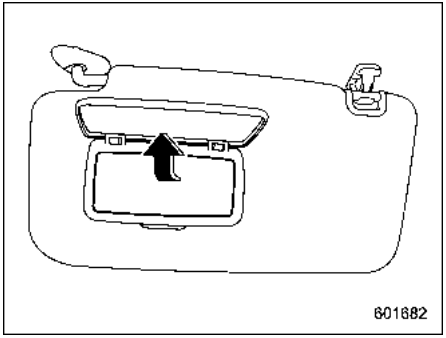


To use the vanity mirror, swing down the sun visor and open the vanity mirror cover.

## ■ Vanity mirror with light (if equipped)

**⚠ CAUTION**

**Keep the vanity mirror cover closed while the car is being driven to avoid being distracted by the light.**

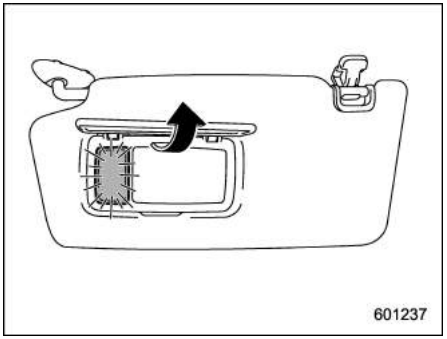


To use the vanity mirror, swing down the sun visor and open the vanity mirror cover.

The light beside the vanity mirror illuminates when the mirror cover is opened.

### NOTE

**Use of the vanity mirror light for a long period of time while the engine is not running can cause battery discharge.**

# Storage compartment

**⚠ CAUTION**

- **Always keep the storage compartment closed while driving to reduce the risk of injury in the event of sudden stops or an accident.**
- **Do not store spray cans, containers with flammable or corrosive liquids or any other dangerous items in the storage compartment.**

## ■ Glove box

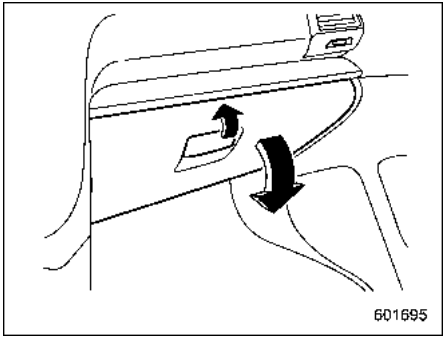


To open the glove box, pull the handle. To close it, push the lid firmly upward.

## ■ Center console

The center console box provides a storage space.

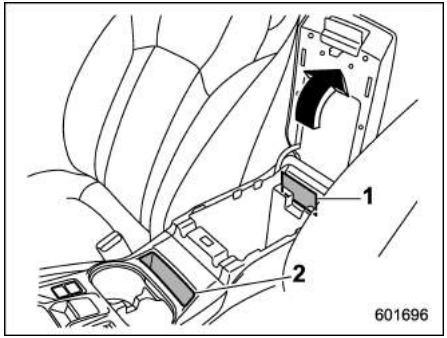


1) Card holder
2) Holder (smartphone, card, etc.)

The top of the console can be used as an armrest.

## ■ Cup holders

**⚠ CAUTION**

- **Do not pick up a cup from the cup holder or put a cup in the holder while you are driving, as this may distract you and lead to an accident.**
- **Take care to avoid spills. Beverages, if hot, might burn you and/or your passengers. Spilled beverages may also damage upholstery, carpets or audio equipment.**

### ▼ Front passenger's cup holder

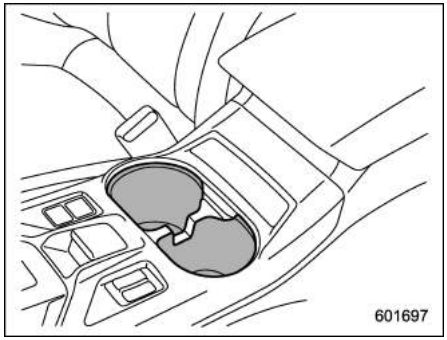


A dual cup holder is built into the console.

– CONTINUED –

▼ **Rear passenger's cup holder (if equipped)**

**CAUTION**

**When a cup in the rear passenger's cup holder contains a beverage, do not fold down the rear seatback. Otherwise, the beverage could spill and, if the beverage is hot, it could burn you and/or your passengers.**

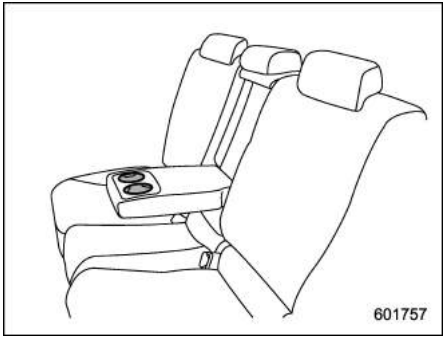


A dual cup holder is built into the armrest.

## ■ Bottle holders

**CAUTION**

- **Do not pick up a bottle from the bottle holder or put a bottle in the holder while you are driving, as this may distract you and lead to an accident.**
- **When placing a beverage in a bottle holder, make sure it is capped. Otherwise, the beverage could spill when opening/closing the door or while driving and, if the beverage is hot, it could scald you and/or your passengers.**

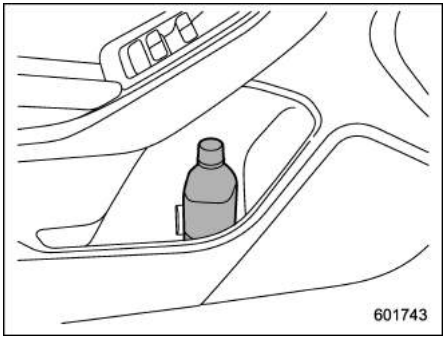


The bottle holder equipped on each door trim can be used to hold beverage bottles and other items.

## Accessory power outlets

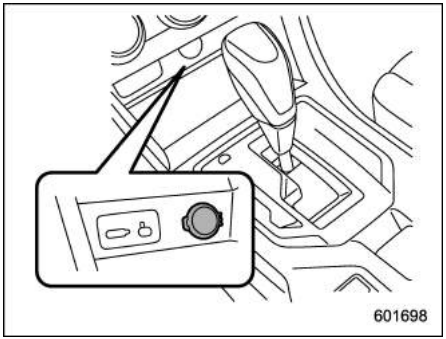


**Power outlet below the climate control**

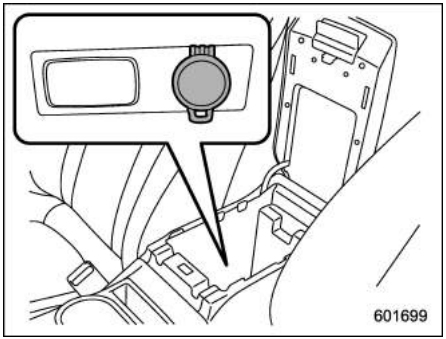


**Power outlet in the center console**

Electrical power (12 V DC) from the battery is available at any of the outlets when the ignition switch is in either the “ACC” or “ON” position.

You can use an electrical appliance by connecting it to an outlet.

The maximum power rating of an appliance that can be connected is **120 W**.

**CAUTION**

- **Do not attempt to use a cigarette lighter in the accessory power outlets.**
- **Do not place any foreign objects, especially metal ones such as coins or aluminum foil, into the accessory power outlet. That could cause a short circuit. Always put the cap on the accessory power outlet when it is not in use.**
- **Use only electrical appliances which are designed for 12 V DC.**

  **The maximum power rating of an appliance that can be connected is 120 W. Do not use an appliance which exceeds the indicated wattage for each outlet.**
- **When using appliances connected to two outlets simultaneously, the total power consumed by them must not exceed 120 W. Overloading the accessory power outlet can cause a short circuit. Do not use double adapters or more than one electrical appliance.**
- **If the plug on your electric appliance is either too loose or too tight for the accessory power outlet, this can result in a poor contact or cause the plug to get stuck. Only use plugs that fit properly.**
- **Use of an electric appliance in the accessory power outlet for a long period of time while the engine is not running can cause battery discharge.**
- **Before driving your vehicle, make sure that the plug and the cord on your electrical appliance will not interfere with your shifting gears and operating the accelerator and brake pedals. If they do, do not use the electrical appliance while driving.**

– CONTINUED –

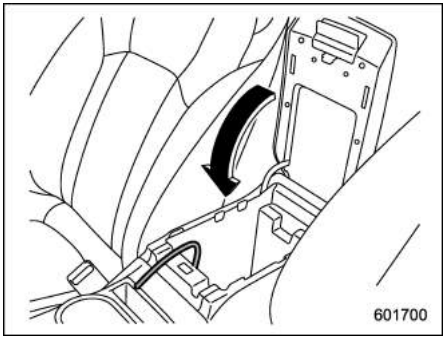


## NOTE

**When the lid of the center console is closed, an opening remains between the center console and the lid to allow the power outlet in the center console to be used. Pass the cord of the electrical appliance through this opening.**

## ■ Cigarette lighter (if equipped)

A cigarette lighter may be installed in place of an accessory power outlet. The cigarette lighter assembly is available from your SUBARU dealer.

The cigarette lighter operates only when the ignition switch is in the “ON” or “ACC” position.

To use the cigarette lighter, push in the knob and wait a few moments. It will automatically spring up when ready for use.

**⚠ WARNING**

**To avoid being burned, never grasp the lighter by the end with the heating element. Doing so could result in injury and could also damage the heating element.**

**⚠ CAUTION**

- **Do not hold the lighter pushed in, because it will overheat.**
- **Do not use non-genuine cigarette lighter plugs in the socket. Doing so may cause a short-circuit and overheating, resulting in a fire.**
- **If the socket is ever used for a plug-in accessory such as a cell phone, that may damage the portion of the socket’s internal mechanism that causes a cigarette lighter plug to “pop out” after its lighter element is heated. Therefore, do not place a cigarette lighter plug in a socket that has been used, even once, to power a plug-in accessory. Doing so may cause the plug to stick and overheat, creating a potential fire hazard.**

## USB power supply

**CAUTION**

- The specification of a USB terminal that can be used is the A-type. If a different specification of terminal is connected, power supply or charging may not be possible, or the device may malfunction.
- There is no guarantee even when a connected device malfunctions or data is damaged. The connection of a device shall be performed at your responsibility.
- To avoid an electric shock or a malfunction, observe the following precautions.
  - Do not connect a USB hub.
  - Do not insert any metal or other foreign object into the USB terminal.
  - Do not spill water or other liquid on the USB terminal.
- When you have connected a cable, pay attention not to pull on the connected cable with your legs. Otherwise, it may result in injury to you by falling over, or a malfunction of the connected device.
- If a device is connected for a long time when the engine is not running, doing so may cause the risk of a discharged battery. Even when the engine is running, we recommend that you do not connect a device for an unnecessarily long time.
- Do not connect a malfunctioning device. Doing so may cause the risk of smoke and fire.

### NOTE

- The USB power supply is designed to supply a maximum rated power of DC 5 V/1 A or DC 5 V/2.1 A. Before connecting a device, be sure to read the instruction manual of the device and check whether or not this specification of the output is supported by the device. If a device that requires power exceeding the maximum rating is connected, power supply or charging may not be possible. Even if charging could be completed, the time required for charging may be longer than when the genuine charger for that device is used.
- Depending on the device, charging may be possible only when a special cable is used. In this case, be sure to connect the device using the special cable.
- When a device that communicates with a PC is connected, power supply or charging may not be possible.
- When connect a device for charging, disconnect the device promptly after charging is completed.

– CONTINUED –

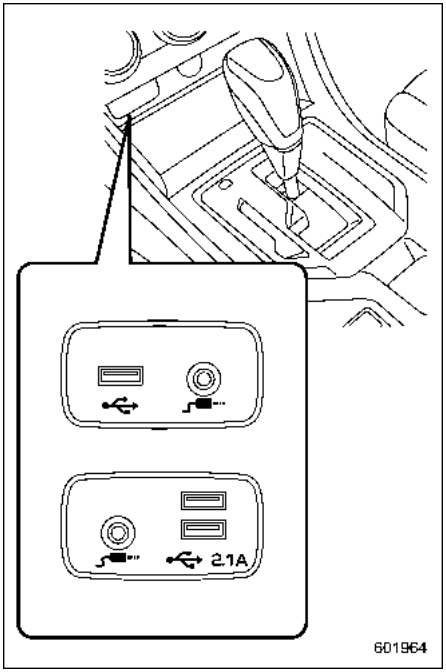


**Front seat 1 terminal type USB power supply**

– DC 5 V/1 A

– Audio devices can be connected and used.

**Front seat 2 terminal type USB power supply**

– DC 5 V/2.1 A*

– Audio devices can be connected and used.

*: The available electricity of the two USB terminals is a maximum of 4.2 A.

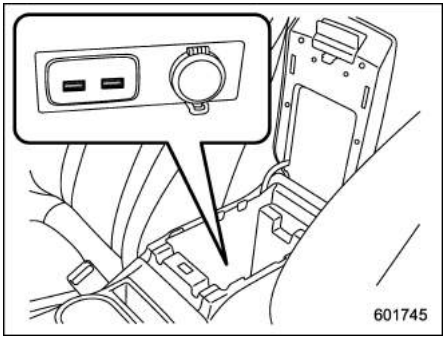


**Console USB power supply**

– DC 5 V/2.1 A*

– Power supply function only

*: The available electricity of the two USB terminals is a maximum of 4.2 A.

When the ignition switch is in the “ACC” or “ON” position and a USB electronic device is connected to the USB terminal, DC 5 V power can be supplied to the device. Use the USB terminal to use or charge an electronic device.

## Ashtray (if equipped)

**CAUTION**

- **Do not use ashtrays as waste receptacles or leave a lighted cigarette in an ashtray. This could cause a fire.**
- **Always extinguish matches and cigarettes before putting them into the ashtray, and then close the ashtray securely. If you keep the ashtray open, the fire of the cigarette may spread to another cigarette butt and start a fire.**
- **Do not put flammable material in the ashtray.**
- **Do not leave a lot of cigarette butts in the ashtray.**

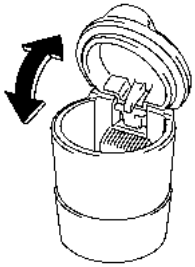


The portable ashtray can be installed in each cup holder or bottle holder. For the locations of the cup holders, refer to “Cup holders” ☞6-5. For the locations of the bottle holders, refer to “Bottle holders” ☞6-6.

When using the ashtray, open the lid of the ashtray. Fully close the lid after using the ashtray to help reduce residual smoke.

### NOTE

**Particles of ash and tobacco will accumulate around the hinges of the ashtray’s inner lid. Clean them off using a toothbrush or another narrow-ended implement.**

## Floor mat

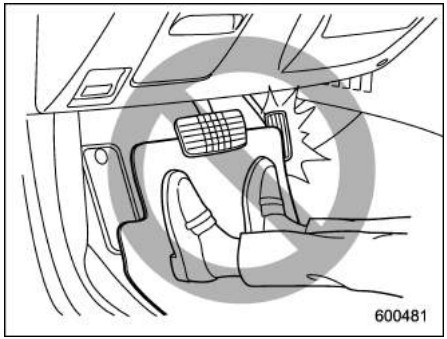


**CAUTION**

**If the floor mat slips forward and interferes with the movement of the pedals during driving, it could cause an accident. Observe the following precautions to prevent the floor mat from slipping forward.**

- **Be sure to use a genuine SUBARU floor mat or an equivalent designed with grommets in the correct locations.**
- **Make sure that the driver’s floor mat is placed back in its proper location and is correctly secured on its retainers.**

– CONTINUED –

- **Do not use more than one floor mat.**

- Left-hand drive models:

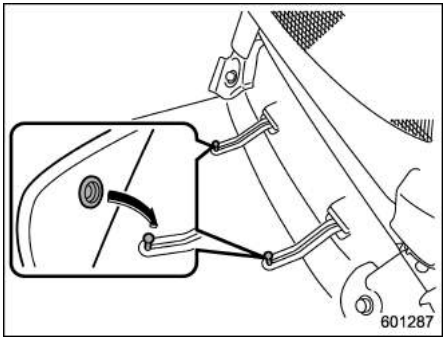


Retaining pins are located on the driver's side floor.

The driver's floor mat should be properly secured using the built-in grommets, by placing the grommets over the pins and pushing them downward.

- Right-hand drive models:

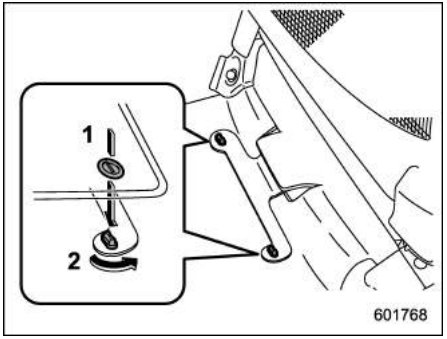


1) First, place the grommets over the retainers and push them downward.
2) Then, rotate the retainers 90 degrees to secure the floor mat.

Retainers are located on the driver's side floor.

The floor mat should be properly secured using the built-in grommets as shown in the illustration.

## Coat hook

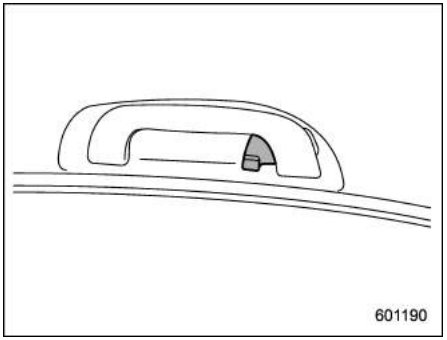


A coat hook is attached to the rear passenger's hand grip.

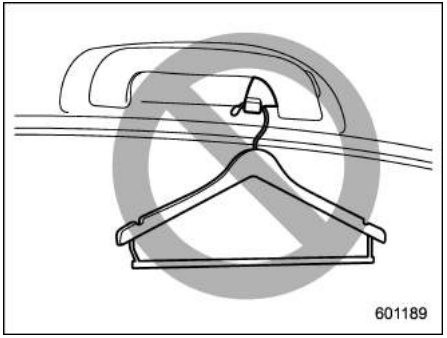

**WARNING**

**Obey the following instructions.**

- **Do not hang coat hangers or other hard or pointed objects on the coat hooks. Hang clothing directly on the coat hooks without using hangers.**
- **Before hanging clothing on the coat hooks, make sure there are no pointed objects in the pockets.**

**If these instructions are ignored, the following may occur in sudden stops or in a collision.**

- **serious injuries by the items thrown through the cabin.**
- **incorrect SRS curtain airbag deployment (for models with SRS curtain airbag)**

**CAUTION**

**Never hang anything on the coat hook that might obstruct the driver's view or that could cause injury in sudden stops or in a collision. Also, do not hang items on the coat hook that weigh 5 kg (11 lbs) or more.**

## Shopping bag hook

**CAUTION**

**Do not hang items on the shopping bag hook that weigh 3 kg (6 lbs) or more.**

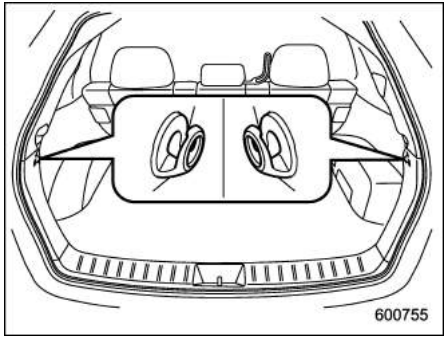


A shopping bag hook is attached to each side of the cargo area.

## Cargo area cover (if equipped)

The cargo area cover is provided for covering the cargo area and to protect its contents from direct sunlight. This cover is detachable to make room for additional cargo.

### ■ Using the cover

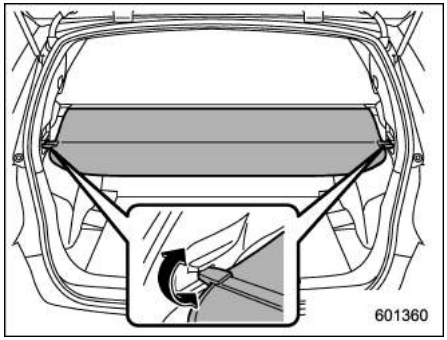


To extend the cover, pull the end of the cover out of the housing, then insert its hooks into the catches as shown. To rewind it, unhook it from the catches and it will rewind automatically. You should hold on to the cover and guide it back into the cover housing while it is rewinding.

– CONTINUED –

**WARNING**

**Do not place anything on the extended cover. Putting excessive weight on the extended cover can break it and an object on the cover could tumble forward in the event of a sudden stop or collision. This could cause serious injury.**

**CAUTION**

**Be careful not to scratch the rear gate stays while extending and rewinding the cover. Scratches on the stays could cause leakage of gas from the stays, which may result in their inability to hold the rear gate open.**

## ■ To remove the cover housing

1. Rewind the cover.

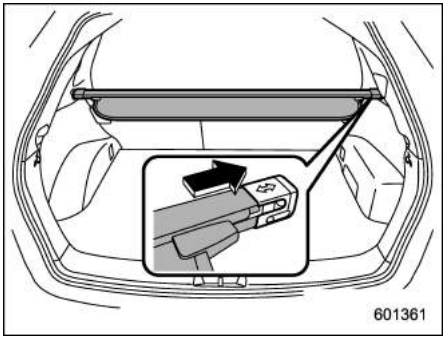


2. Push the cover housing to the right side and shorten it.
3. Take it off the retainer.

## ■ Stowage of the cargo area cover

For models with a flat tire repair kit, the cargo area cover can be stowed under the cargo floor as follows.

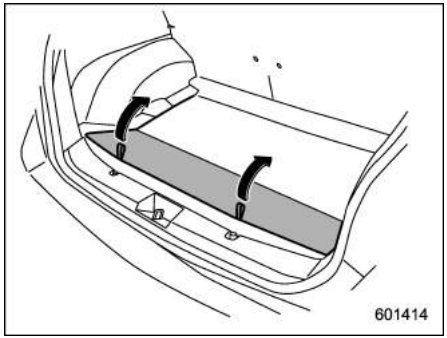


1. Raise and fold the rear end of the cargo floor board.

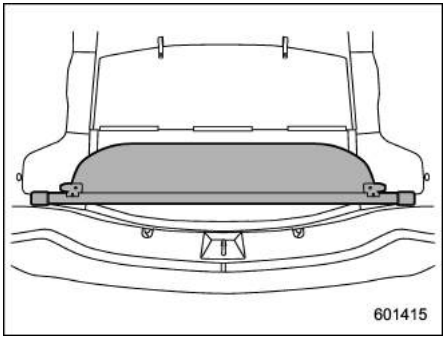


2. Stow the cover housing in the cargo area end.

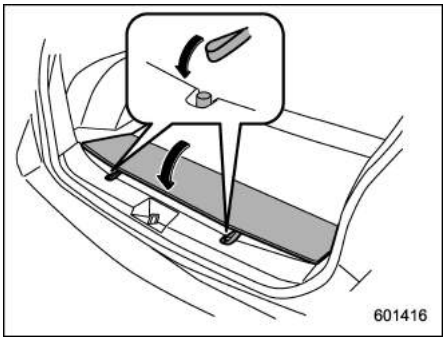


3. Put the cargo floor board back while hanging two retaining straps on the hooks that are located on the rear wall of cargo area.

## ■ To install the cover housing

The right end of the cargo area cover is a sliding structure.

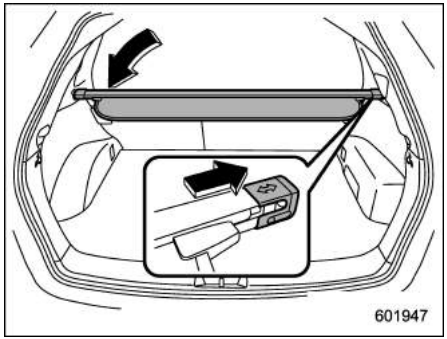


1. Insert the right end of the cover into the recessed portion with the arrow mark facing upward.
2. Hold the cover housing securely and insert the left end of the cover into the recessed portion.

# Cargo tie-down hooks (if equipped)

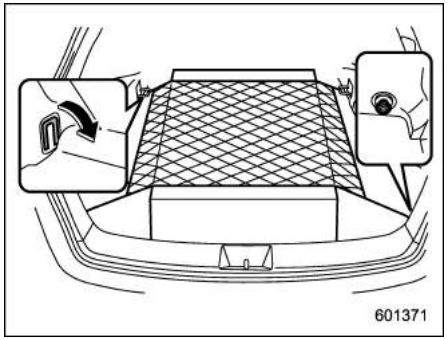


The cargo area is equipped with two or four tie-down hooks so that cargo can be secured with a cargo net or ropes.

When using the front tie-down hooks, turn them down out of the storing recesses.

**⚠ CAUTION**

**The cargo tie-down hooks are designed only for securing light cargo. Never try to secure cargo that exceeds the capacity of the hooks. The maximum load capacity is 10 kg (22 lbs) per a hook.**

## Under-floor storage compartment (if equipped)

### NOTE

**The shape of the storage compartment may be different depending on the model.**

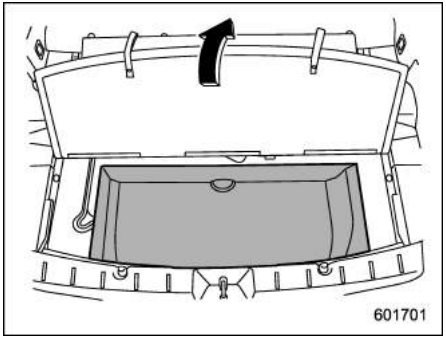


The storage compartment is located under the floor of the cargo area and can be used to store small items.

**CAUTION**

- **Always keep the lid of the storage compartment closed while driving to reduce the risk of injury in the event of sudden stop or an accident.**
- **Do not store spray cans, containers with flammable or corrosive liquids or any other dangerous items in the storage compartment.**

Fuel ..... 7-3
Fuel requirements ..... 7-3
Fuel filler lid and cap ..... 7-4
Preparing to drive ..... 7-6
Starting and stopping engine (models without push-button start system) ..... 7-7
Starting engine ..... 7-7
Stopping engine ..... 7-9
Starting and stopping engine (models with push-button start system) ..... 7-9
Safety precautions ..... 7-9
Operating range for push-button start system ..... 7-9
Starting engine ..... 7-9
Stopping engine ..... 7-11
When access key fob does not operate properly ..... 7-11
Continuously variable transmission ..... 7-12
Select lever ..... 7-13
Selection of manual mode (if equipped) ..... 7-14
Selection of “L” (if equipped) ..... 7-16
Shift lock function ..... 7-17
Driving tips ..... 7-18
Power steering ..... 7-18
Braking ..... 7-19
Braking tips ..... 7-19
Brake system ..... 7-20
Disc brake pad wear warning indicators ..... 7-21
ABS (Anti-lock Brake System) ..... 7-22
ABS self-check ..... 7-22
ABS warning light ..... 7-22
Electronic Brake Force Distribution (EBD) system ..... 7-23
Steps to take if EBD system fails ..... 7-23
Vehicle Dynamics Control system ..... 7-24
Vehicle Dynamics Control system monitor ..... 7-26
Vehicle Dynamics Control OFF switch ..... 7-26
X-MODE ..... 7-27
To activate/deactivate the X-MODE ..... 7-28
Hill descent control function ..... 7-29
Parking your vehicle ..... 7-31
Electronic parking brake ..... 7-31
Parking tips ..... 7-37
Hill start assist system ..... 7-38
Tire pressure monitoring system (TPMS) (if equipped) ..... 7-40
TPMS screen (type B combination meter) (if equipped) ..... 7-41
TPMS mode setting ..... 7-41
Cruise control (if equipped) ..... 7-43
To set cruise control ..... 7-44
To temporarily cancel the cruise control ..... 7-45
To turn off the cruise control ..... 7-46
To change the cruising speed ..... 7-46
Cruise control indicator light ..... 7-47
Cruise control set indicator light ..... 7-47
Auto Start Stop system (if equipped) ..... 7-47
System operation ..... 7-47
Displaying the Auto Start Stop system status ..... 7-52
System warning ..... 7-52

**Subaru Rear Vehicle Detection (SRVD) (if equipped) ..... 7-53**
System features ..... 7-53
System operation ..... 7-56
SRVD approach indicator light/warning buzzer ..... 7-57
SRVD OFF indicator ..... 7-59
SRVD warning indicator ..... 7-59
SRVD OFF switch ..... 7-60
Handling of radar sensors ..... 7-61

**Reverse Automatic Braking System (if equipped) ..... 7-61**
Reverse Automatic Braking System overview ..... 7-62
Operating conditions ..... 7-64
Reverse Automatic Braking System operation ..... 7-66
Canceling the Reverse Automatic Braking system operation ..... 7-69
Reverse Automatic Braking system ON/OFF setting ..... 7-70
RAB warning indicator ..... 7-71
Handling of the sonar sensors ..... 7-71

# Fuel

## ■ Fuel requirements

**⚠ CAUTION**

- **Use of a fuel which is low in quality or use of an inappropriate fuel additive may cause damage to the engine and/or fuel system.**
- **Do not let fuel spill on the exterior surfaces of the vehicle. Because fuel may damage the paint, be sure to wipe off any spilled fuel quickly. Paint damage caused by spilled fuel is not covered under the SUBARU Limited Warranty.**
- **The neck of the fuel filler pipe is designed to accept only an unleaded petrol filler nozzle. Under no circumstances should leaded petrol be used because it will damage the emission control system and may impair driveability and fuel economy. Also, this can increase maintenance costs.**

### ▼ For Australia

#### ▽ Fuel type

**Unleaded petrol** only.

#### ▽ Required Research Octane Number (RON)

**91 or higher** is recommended.

For optimum engine performance and drivability, it is recommended that you use premium grade unleaded petrol.

#### ▽ Use of ethanol blended petrol

SUBARU allows the use of ethanol blended petrol if the ethanol content is up to 10%. Make sure that the ethanol blended petrol to be used has a Research Octane Number that follows the above.

### ▼ For Europe

#### ▽ Fuel type

**Unleaded petrol** only.

#### ▽ Required Research Octane Number (RON)

**95 or higher** is recommended.

If unleaded petrol with an octane rating of 95 or higher is not available, unleaded petrol with an octane rating of 90 or higher may be used.

#### ▽ Use of ethanol blended petrol

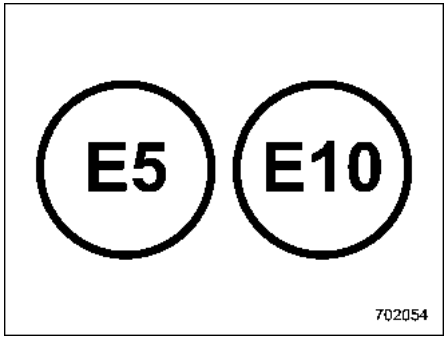


When you find these types of fuel labels at the petrol station, use only the fuel with one of the above labels.

SUBARU allows the use of ethanol blended petrol if the ethanol content is up to 10%. Make sure that the ethanol blended petrol to be used has a Research Octane Number that follows the above.

– CONTINUED –

▼ **For Other areas**

▽ **Fuel type**

**Unleaded petrol** only.

▽ **Required Research Octane Number (RON)**

**95 or higher** is recommended.

If unleaded petrol with an octane rating of 95 or higher is not available, unleaded petrol with an octane rating of 90 or higher may be used.

▽ **Use of ethanol blended petrol**

SUBARU allows the use of ethanol blended petrol if the ethanol content is up to 10%. Make sure that the ethanol blended petrol to be used has a Research Octane Number that follows the above.

▼ **In areas where the impurity content in the fuel is high**

For 2.0L models, add **a bottle** of genuine SUBARU fuel additive to the fuel every 15,000 km (9,000 miles). For further details refer to an authorized SUBARU dealer.

## ■ Fuel filler lid and cap

▼ **Locations of the fuel filler lid and the lid release lever**

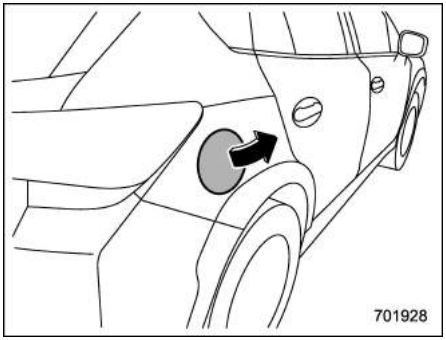


**Fuel filler lid**

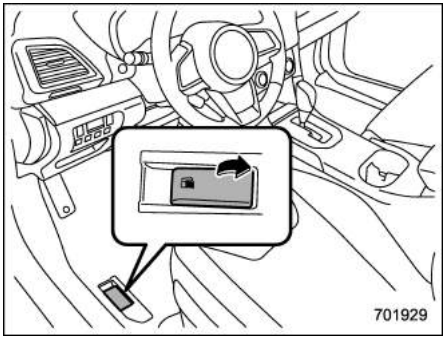


**Fuel filler lid release lever**

▼ **Refueling**

Only one person should be involved in refueling. Do not allow others to approach the area of the vehicle near the fuel filler pipe while refueling is in progress.

Be sure to observe any other precautions that are posted at the service station.

1. Stop the vehicle and turn off the engine.
2. To open the fuel filler lid, pull the lid release lever up. The lever is on the floor of the driver's seat.

**⚠ WARNING**

**Before opening the fuel filler cap, first touch the vehicle body or a metal portion of the fuel pump or similar object to discharge any static electricity that may be present on your body. If your body is carrying an electrostatic charge, there is a possibility that an electric spark could ignite the fuel, which could burn you. To avoid acquiring a new static electric charge, do not get back into the vehicle while refueling is in progress.**

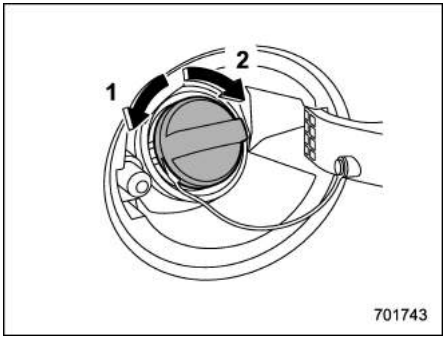


1) Open
2) Close

3. Remove the fuel filler cap by turning it slowly counterclockwise.

**WARNING**

- **Fuel vapor is highly flammable. Before refueling, always first stop the engine and close all vehicle doors and windows. Make sure that there are no lighted cigarettes, open flames or electrical sparks in the adjacent area. Only handle fuel outdoors. Quickly wipe up any spilled fuel.**
- **When opening the cap, grasp it firmly and turn it slowly counterclockwise. Do not remove the cap quickly. Fuel may be under pressure and spray out of the fuel filler neck, especially in hot weather. If you hear a hissing sound while you are removing the cap, wait for the sound to stop and then slowly open the cap to prevent fuel from spraying out and creating a fire hazard.**

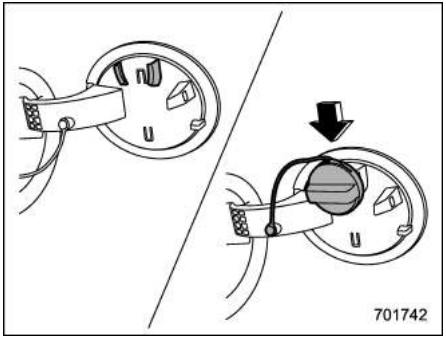


4. Set the fuel filler cap on the cap holder inside the fuel filler lid.

**WARNING**

- **When refueling, insert the fuel nozzle securely into the fuel filler pipe. If the nozzle is lifted or not fully inserted, its automatic stopping mechanism may not function, causing fuel to overflow the tank and creating a fire hazard.**
- **Stop refueling when the automatic stop mechanism on the fuel nozzle activates. If you continue to add fuel, temperature changes or other conditions may cause fuel to overflow from the tank and create a fire hazard.**

5. Stop filling the tank after the fuel filler pump automatically stops. Do not add any more fuel.

6. Put the cap back on, turn it clockwise until you hear a clicking noise. Be certain not to catch the tether under the cap while tightening.

**CAUTION**

**Make sure that the cap is tightened until it clicks to prevent fuel spillage in the event of an accident.**

7. Close the fuel filler lid completely.

– CONTINUED –

**CAUTION**

**If you spill any fuel on the painted surface, rinse it off immediately. Otherwise, the painted surface could be damaged.**

## NOTE

**You will see the "⛽▶" sign in the fuel gauge. This indicates that the fuel filler door (lid) is located on the right side of the vehicle.**

**CAUTION**

- **Never add any cleaning agents to the fuel tank. The addition of a cleaning agent may cause damage to the fuel system.**
- **After refueling, turn the cap clockwise until it clicks to ensure that it is fully tightened. If the cap is not securely tightened, fuel may leak out while the vehicle is being driven or fuel spillage could occur in the event of an accident, creating a fire hazard.**
- **Do not let fuel spill on the exterior surfaces of the vehicle. Because fuel may damage the paint, be sure to wipe off any spilled fuel quickly. Paint damage caused by spilled fuel is not covered under the SUBARU Limited Warranty.**
- **We recommend that you always use a genuine SUBARU fuel filler cap. If you use the wrong cap, it may not fit or have proper venting and your fuel tank and emission control system may be damaged. It could also lead to fuel spillage and a fire.**
- **Immediately put fuel in the tank whenever the low fuel warning light illuminates. Engine misfires as a result of an empty tank could cause damage to the engine. Continuing to operate your vehicle at an extremely low fuel level may result in reduced engine performance.**

# Preparing to drive

You should perform the following checks and adjustments every day before you start driving.

1. Check that all windows, mirrors, and lights are clean and unobstructed.
2. Check the appearance and condition of the tires. Also check tires for proper inflation.
3. Look under the vehicle for any sign of leaks and check that no small animal is under the vehicle.
4. Check that no small animal enters the engine compartment.
5. Check that the hood and rear gate are fully closed.
6. Check the adjustment of the seat.
7. Check the adjustment of the inside and outside mirrors.
8. Fasten your seatbelt. Check that your passengers have fastened their seatbelts.
9. Check the operation of the warning and indicator lights when the ignition switch is turned to the "ON" position.
10. Check the gauges, indicator and warning lights after starting the engine.

**CAUTION**

Trapping small animals in the cooling fan and belts of the engine may result in a malfunction. Check that no small animal enters the engine compartment and under the vehicle before starting the engine.

**NOTE**

- Engine oil, engine coolant, brake fluid, washer fluid and other fluid levels should be checked daily, weekly or at fuel stops.
- Before towing a trailer, refer to "Trailer towing" ☞8-15.

# Starting and stopping engine (models without push-button start system)

## ■ Starting engine

**CAUTION**

Do not operate the starter motor continuously for more than 10 seconds. If the engine fails to start after operating the starter for 5 to 10 seconds, wait for 10 seconds or more before trying again.

**NOTE**

It may be difficult to start the engine when the battery has been disconnected and reconnected (for maintenance or other purposes). This difficulty is caused by the electronically controlled throttle's self-diagnosis function. To overcome it, keep the ignition switch in the "ON" position for approximately 10 seconds before starting the engine.

### ▼ General precautions when starting engine

**WARNING**

- Never start the engine from outside the vehicle. It may result in an accident.
- Do not leave the engine running in locations with poor ventilation, such as a garage and indoors. The exhaust gas may enter the vehicle or indoors, and it may result in carbon monoxide poisoning.
- Do not start the engine near dry foliage, paper, or other flammable substances. The exhaust pipe and exhaust emissions can create a fire hazard at high temperatures.

**CAUTION**

- If the engine is stopped during driving, the catalyst may overheat and burn.
- When starting the engine, be sure to sit in the driver's seat.

– CONTINUED –

## NOTE

- **Avoid rapid racing and rapid acceleration immediately after the engine has started.**
- **For a short time after the engine has started, the engine speed is kept high. When the warm-up is completed, the engine speed lowers automatically.**
- **On rare occasions, it may be difficult to start the engine depending on the fuel and the usage condition (repeated driving of a distance in which the engine has not warmed up sufficiently). In such a case, it is recommended that you change to a different brand of fuel.**
- **On rare occasions, transient knocking may be heard from the engine when the accelerator is operated rapidly such as a rapid start-up and a rapid acceleration. This is not a malfunction.**
- **The engine starts more easily when the headlights, air conditioner and rear window defogger are turned off.**
- **Do not shift the select lever while the starter is cranking.**

1. Apply the parking brake.
2. Turn off unnecessary lights and accessories.
3. Shift the select lever to the “P” or “N” position (preferably “P” position).
4. Turn the ignition switch to the “ON” position and check the operation of the warning and indicator lights. Refer to “Warning and indicator lights” ☞3-13.
5. Turn the ignition switch to the “START” position **without** depressing the accelerator pedal. Release the key immediately after the engine has started.

If the engine does not start, try the following procedures.

(1) Turn the ignition switch to the “LOCK” position and wait for at least 10 seconds. After checking that the parking brake is firmly set, turn the ignition switch to the “START” position while depressing the accelerator pedal slightly (approximately a quarter of the full stroke). Release the accelerator pedal as soon as the engine starts.

(2) If this fails to start the engine, turn the ignition switch back to the “LOCK” position and wait for at least 10 seconds. Then fully depress the accelerator pedal and turn the ignition switch to the “START” position. If the engine starts, quickly release the accelerator pedal.

(3) If this fails to start the engine, turn the ignition switch again to the “LOCK” position. After waiting for 10 seconds or longer, turn the ignition switch to the “START” position without depressing the accelerator pedal.

(4) If the engine still fails to start, we recommend that you contact your nearest SUBARU dealer for assistance.

6. Confirm that all warning and indicator lights have turned off after the engine has started. The fuel injection system automatically lowers the idle speed as the engine warms up.

While the engine is warming up, make sure that the select lever is at the “P” or “N” position and that the parking brake is applied.

**⚠ CAUTION**

**If you restart the engine while the vehicle is moving, shift the select lever into the “N” position. Do not attempt to place the select lever of a moving vehicle into the “P” position.**

## ■ Stopping engine

The ignition switch should be turned off only when the vehicle is stopped and the engine is idling.

**⚠ WARNING**

**Do not stop the engine when the vehicle is moving. This will cause loss of power to the power steering and the brake booster, making steering and braking more difficult. It could also result in accidental activation of the "LOCK" position on the ignition switch, causing the steering wheel to lock.**

# Starting and stopping engine (models with push-button start system)

Once you enter the vehicle carrying the access key fob, the power can be switched and the engine can be started.

## ■ Safety precautions

Refer to "Safety precautions" ☞2-4.

## ■ Operating range for push-button start system

Refer to "Operating range for push-button start system" ☞3-6.

## ■ Starting engine

**⚠ WARNING**

- **There are some general precautions when starting the engine. Carefully read the precautions described in "Starting engine" ☞7-7.**
- **If the indicator on the push-button ignition switch flashes in green after the engine has started, never drive the vehicle. The steering wheel is still locked, and it may result in an accident. To release the steering lock, press the push-button ignition switch again while moving the steering wheel right and left and depressing the brake pedal.**

**⚠ CAUTION**

- **When the operation indicator on the push-button ignition switch is flashing in orange, there may be a malfunction with the vehicle. We recommend that you contact a SUBARU dealer immediately.**
- **Do not continue pushing the push-button ignition switch for more than 10 seconds. Doing so could cause a malfunction. If the engine does not start, stop pushing the push-button ignition switch. Instead, press the push-button ignition switch without depressing the brake pedal to switch the power status to "OFF". Wait 10 seconds, and then push the push-button ignition switch to start the engine.**
- **After the engine starts, the engine speed will be kept high until the coolant temperature low indica-**

– CONTINUED –

**tor light turns off. Refer to "Coolant temperature low indicator light/Coolant temperature high warning light" ☞3-18.**

## NOTE

- **For a short time after the engine has started, the engine speed is kept high. When the warm-up is completed, the engine speed lowers automatically.**
- **When the push-button ignition switch is pressed while depressing the brake pedal, the engine starter operates for a maximum of 10 seconds and after starting the engine, the starter stops automatically.**
- **When the push-button ignition switch is pressed while depressing the brake pedal, the engine can be started regardless of the power status.**
- **If the immobilizer indicator light illuminates when you attempt to start the engine but the engine does not start, press the push-button ignition switch to switch the power to "OFF" and then try to start the engine again.**
- **If the engine does not start, press the push-button ignition switch without depressing the brake pedal to switch the power to "OFF". Then, while depressing the brake pedal more forcefully, press the push-button ignition switch.**
- **The engine start procedures may not function depending on the radio wave conditions around the vehicle. In such a case, refer to "Starting engine" ☞9-28.**
- **If the vehicle battery is discharged, the steering cannot be unlocked. Charge the battery.**
- **Do not shift the select lever while the starter is cranking.**

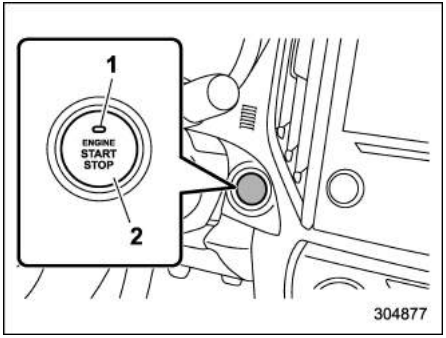


1) Operation indicator
2) Push-button ignition switch

When the push-button ignition switch is pressed while depressing the brake pedal, the engine will start. The start procedure of the engine is as follows.

1. Carry the access key fob, and sit in the driver's seat.
2. Apply the parking brake.
3. Shift the select lever in the "P" position. The engine can also start when the select lever is in the "N" position, however, for safety reasons, start in the "P" position.
4. Depress the brake pedal until the operation indicator on the push-button ignition switch turns green. When starting with the select lever in the "N" position, the indicator does not turn green.
5. While depressing the brake pedal, press the push-button ignition switch.

## NOTE

- **While pressing the select lever button, the indicator on the push-button ignition switch will not turn green even when the select lever is in the "P" position.**
- **In case the engine does not start by the normal engine start procedure, move the select lever to the "P" position, and switch the power to "ACC". Depress the brake pedal, and press the push-button ignition switch for at least 15 seconds. The engine may start. Only use this engine start procedure in case of emergency.**
- **When the engine is not started, the brake pedal may feel stiff. In such a case, depress the brake pedal more forcefully than usual. Check that the**

**operation indicator on the push-button ignition switch turns green, and press the push-button ignition switch to start the engine.**

## ■ Stopping engine

1. Stop the vehicle completely.
2. Move the select lever to the “P” position.
3. Press the push-button ignition switch. The engine will stop, and the power will be switched to “OFF”.

**⚠ WARNING**

- **Do not touch the push-button ignition switch during driving.**

  **When the push-button ignition switch is operated as follows, the engine will stop.**

  **– The switch is pressed and held for 3 seconds or longer.**

  **– The switch is pressed briefly 3 times or more in succession.**

  **When the engine stops, the brake booster will not function. A greater foot pressure will be required on the brake pedal.**

  **The power steering system will not operate either. A greater force will be required to steer, and it may result in an accident.**

- **If the engine stops during driving, do not operate the push-button ignition switch or open any of the doors until the vehicle is stopped in a safe location. It is dangerous because the steering lock may be activated. Stop the vehicle in a safe location, and we recommend that you contact a SUBARU dealer immediately.**

**⚠ CAUTION**

- **Do not stop the engine while the select lever is in a position other than the “P” position.**
- **If the engine is stopped while the select lever is in a position other than the “P” position, the power will be in “ACC”. If the vehicle is left in this condition, the battery may be discharged.**

### NOTE

**Although you can stop the engine by operating the push-button ignition switch, do not stop the engine during driving except in an emergency.**

## ■ When access key fob does not operate properly

Refer to “Access key fob – if access key fob does not operate properly” ☞9-27.

## Continuously variable transmission

The continuously variable transmission is electronically controlled and provides an infinite number of forward speeds and 1 reverse speed. For some models, it also has a manual mode or an “L” position.

**WARNING**

**Do not shift from the “P” or “N” position into the “D” or “R” position while depressing the accelerator pedal. This may cause the vehicle to lurch forward or backward.**

**CAUTION**

- **Observe the following precautions. Otherwise, the transmission could be damaged.**
  - **Shift into the “P” or “R” position only after the vehicle has completely stopped.**
  - **Do not shift from the “D” position into the “R” position or vice versa until the vehicle has completely stopped.**
- **Do not race the engine for more than 5 seconds in any position except the “N” or “P” position when the brake is applied or when chocks are used in the wheels. This may cause the transmission fluid to overheat.**
- **Never move the vehicle as follows. Doing so may result in an unexpected accident or malfunction.**
  - **Moving rearward by inertia with the select lever set in a forward driving position.**
  - **Moving forward by inertia with the select lever set in the “R” position.**
- **When parking the vehicle, first securely apply the parking brake and then place the select lever in the “P” position. Do not park the vehicle for a long time with the select lever in any other position as doing so could result in a dead battery.**

**NOTE**

- **When the engine coolant temperature is still low, the transmission will upshift or downshift at higher engine speeds than when the coolant temperature is sufficiently high in order to shorten the warm-up time and improve driveability. The gearshift timing will automatically shift to the normal timing after the engine has warmed up.**
- **Immediately after transmission fluid is replaced, you may feel that the transmission operation is somewhat unusual. This results from invalidation of data which the on-board computer has collected and stored in the memory to allow the transmission to shift at the most appropriate times for the current condition of your vehicle. Optimized shifting will be restored as the vehicle continues to be driven for a while.**
- **When driving a vehicle that is equipped with CVT under continuous heavy load conditions such as towing a camper or climbing a long, steep hill, the engine speed or the vehicle speed may automatically be reduced. This is not a malfunction. This phenomenon results from the engine control function maintaining the cooling performance of the vehicle. The engine and vehicle speed will return to a normal speed when the engine is able to maintain the optimum cooling performance after the heavy load decreases. Driving under a heavy load must be performed with extreme care. Do not try to pass a vehicle in front when driving on an uphill slope while towing.**

- **The continuously variable transmission is a chain type system that provides superior transmission efficiency for maximum fuel economy. At times, depending on varying driving conditions, a chain operating sound may be heard that is characteristic of this type of system.**

## ■ Select lever

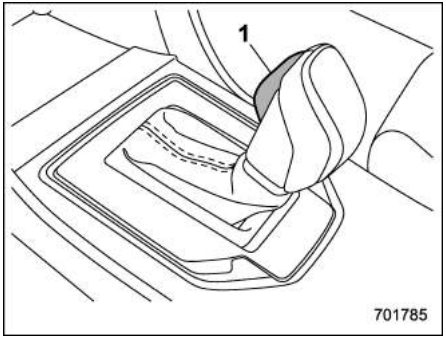


1) Select lever button

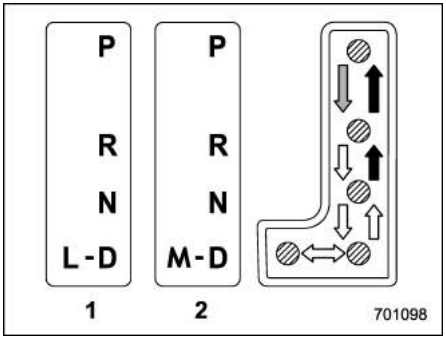


1) Models with “L” position
2) Models with manual mode

⇨ : With the brake pedal depressed, shift while pressing the select lever button in.

➡ : Shift while pressing the select lever button in.

⇨ : Shift without pressing the select lever button.

The select lever has four positions, “P”, “R”, “N”, “D” and it also has an “L” or “M” gate.

### NOTE

**For some models, to protect the engine while the select lever is in the “P” or “N” position, the engine is controlled so that the engine speed may not become too high even if the accelerator pedal is depressed hard.**

**▼ P (Park)**

This position is for parking the vehicle and starting the engine. In this position, the transmission is mechanically locked to prevent the vehicle from rolling freely.

When you park the vehicle, first apply the parking brake firmly, then shift into the “P” position. Do not hold the vehicle with only the mechanical friction of the transmission.

To shift the select lever from the “P” position to any other position, you should depress the brake pedal fully then move the select lever. This prevents the vehicle from lurching when it is started.

**▼ R (Reverse)**

This position is for backing the vehicle. To shift from the “N” to “R” position, stop the vehicle completely then move the lever to the “R” position while pressing the select lever button in.

When the ignition switch has been turned to the “LOCK”/“OFF” position, movement of the select lever from the “N” to “R” position is possible for a limited time period by depressing the brake pedal, and then it becomes impossible. For details, refer to “Shift lock function” ☞7-17.

– CONTINUED –

### ▼ N (Neutral)

This position is for restarting a stalled engine. In this position, the transmission is neutral, meaning that the wheels and transmission are not locked. Therefore, the vehicle will roll freely, even on the slightest incline unless the parking brake or foot brake is applied.

Avoid coasting with the transmission in neutral. Engine braking has no effect in this condition.

**⚠ WARNING**

**Do not drive the vehicle with the select lever in the "N" (neutral) position. Engine braking has no effect in this condition and the risk of an accident is consequently increased.**

## NOTE

**If the select lever is in the "N" position when you stop the engine for parking, you may not subsequently be able to move it to the "R" and "P" positions. If this happens, turn the ignition switch to the "ON" position. You will then be able to move the select lever to the "P" position.**

### ▼ D (Drive)

This position is for normal driving. The transmission shifts automatically and continuously into a suitable gear according to the vehicle speed and the acceleration you require. Also, while driving up and down a hill, the transmission assists and controls the driving performance and engine braking while corresponding to the road grade.

When more acceleration is required in "D" position, depress the accelerator pedal fully to the floor and hold that position. The transmission will automatically downshift. In this case, the transmission will operate like a conventional automatic transmission. When you release the pedal, the transmission will return to the original gear position.

For models with manual mode, if one of the shift paddles behind the steering wheel is operated while driving in the "D" position, the transmission will temporarily switch to the manual mode. In this mode, you can shift into any gear position using the shift paddles. For details about the manual mode, refer to "Selection of manual mode" ☞7-14. Once the vehicle speed stabilizes, the transmission will switch from the manual mode back to the "D" position for normal driving.

## ■ Selection of manual mode (if equipped)

**⚠ CAUTION**

**Do not place or hang anything on the shift paddles. Doing so may result in accidental gear shifting.**

## NOTE

**Please read the following points carefully and bear them in mind when using the manual mode.**

- **If you attempt to shift down when the engine speed is too high, i.e., when a downshift would push the tachometer needle beyond the red zone, beeps will be emitted to warn you that the downshift is not possible.**
- **If you attempt to shift up when the vehicle speed is too low, the transmission will not respond.**
- **You can perform a skip-shift (for example, from 4th to 2nd) by operating the shift paddle twice in rapid succession.**
- **The transmission automatically selects 1st gear when the vehicle stops moving.**
- **If the temperature of the transmission fluid becomes too high, the "AT OIL TEMP" warning light on the combi-**

**nation meter will illuminate. Immediately stop the vehicle in a safe location and let the engine idle until the warning light turns off.**

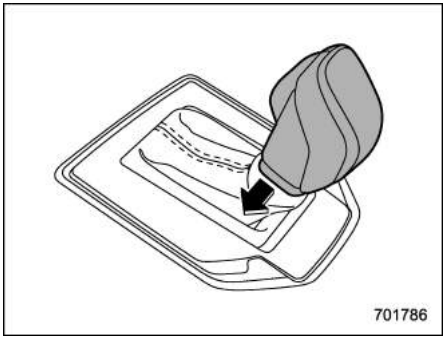


With the vehicle either moving or stationary, move the select lever from the “D” position to the “M” position to select the manual mode.

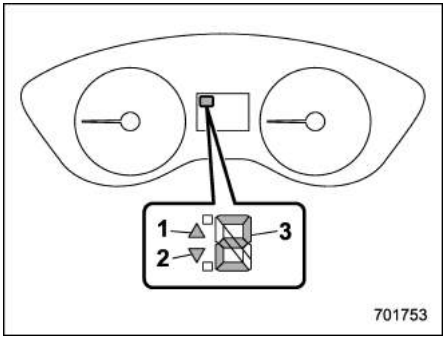


**Type A**
1) Upshift indicator
2) Downshift indicator
3) Gear position indicator

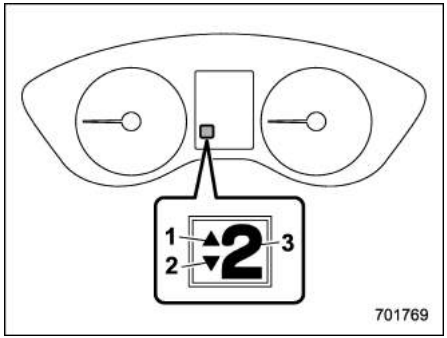


**Type B**
1) Upshift indicator
2) Downshift indicator
3) Gear position indicator

When the manual mode is selected, the gear position indicator and upshift indicator and/or downshift indicator on the combination meter illuminate.

The gear position indicator shows the currently selected gear in the 1st-to-7th-gear range. The upshift and downshift indicators show when a gear shift is possible. When the upshift indicator “▲” illuminates, upshifting is possible. When the downshift indicator “▼” illuminates, downshifting is possible. When both indicators illuminate, upshifting and downshifting are both possible. When the vehicle stops, the gear will be shifted to

– CONTINUED –

the 1st position automatically (for example, at traffic signals) and the downshift indicator turns off.

▼ **Gear shift indicator (if equipped)**

When shifting up is recommended for good fuel economy, the upshift indicator blinks. When shifting down is recommended, the downshift indicator blinks.

▼ **To upshift/downshift**

Gearshifts can be performed using the shift paddle behind the steering wheel.

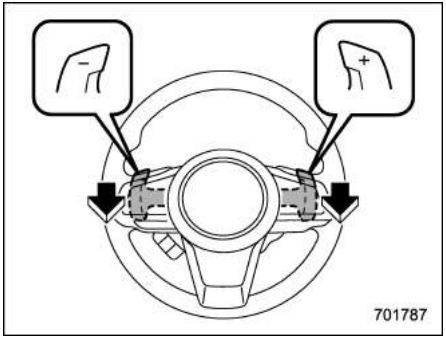


To upshift to the next higher gear position, pull the shift paddle that has "**+**" indicated on it. To downshift to the next lower gear position, pull the shift paddle that has "**–**" indicated on it.

**⚠ CAUTION**

**Do not place or hang anything on the shift paddles. Doing so may result in accidental gear shifting.**

▼ **To deselect the manual mode**

Return the select lever to the "D" position from the "M" position.

## ■ Selection of "L" (if equipped)

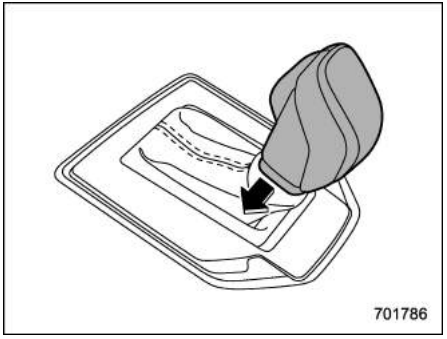


"L" is for using engine braking when going down a hill, etc. To select this mode, move the select lever from the "D" position to the "L" position.

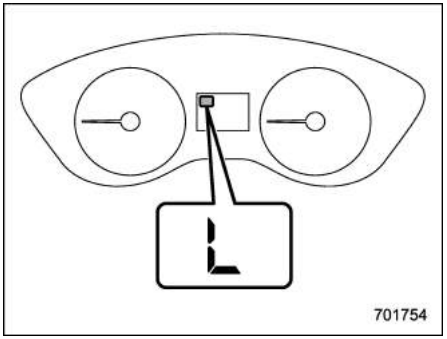


**Type A**

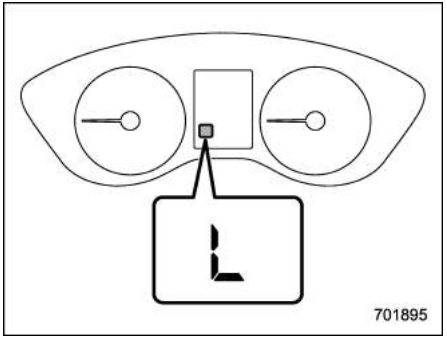


**Type B**

When selected, the indicator "L" will illuminate on the combination meter.

To deselect "L", move the select lever to the "D" position.

## ■ Shift lock function

The shift lock function helps prevent the improper operation of the select lever.

- The select lever cannot be operated unless the ignition switch is turned to the “ON” position and the brake pedal is depressed.
- The select lever cannot be moved from the “P” position to any other position before the brake pedal is depressed. Depress the brake pedal first, and then operate the select lever.
- Only the “P” position allows you to turn the ignition switch from the “ACC” position to the “LOCK”/“OFF” position and remove the key from the ignition switch.
- If the ignition switch is turned to the “LOCK”/“OFF” position while the select lever is in the “N” position, the select lever may not be moved to the “P” position after a period of time. Therefore, move the select lever to the “P” position with the brake pedal depressed soon after the ignition switch is turned to the “LOCK”/“OFF” position.

### ▼ Shift lock release

If the select lever cannot be operated, turn the ignition switch back to the “ON” position then move the select lever to the “P” position with the select lever button pressed and brake pedal depressed.

If the select lever does not move after performing the above procedure, perform the following steps.

- **When the select lever cannot be shifted from “P” to “N”:**

Refer to “Shift lock release using the shift lock release button” ☞7-17.

- **When the select lever cannot be shifted from “N” to “R”, “P”:**

Within 60 seconds after placing the ignition switch in the “ACC” position, move the select lever to the “P” position with the select lever button pressed and brake pedal depressed.

If you must perform the above procedure, the shift lock system (or the vehicle control system) may be malfunctioning. We recommend that you contact a SUBARU dealer for an inspection as soon as possible.

If the select lever does not move after performing the above procedure, refer to “Shift lock release using the shift lock release button” ☞7-17.

### ▼ Shift lock release using the shift lock release button

Perform the following procedure to release the shift lock.

1. Apply the parking brake and stop the engine.

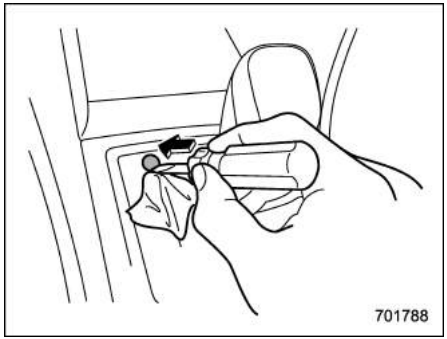


2. Wrap the tip of a flat-head screwdriver with vinyl tape or a cloth and use it to remove the shift lock cover. The shift lock release button is located under the shift lock cover.

– CONTINUED –

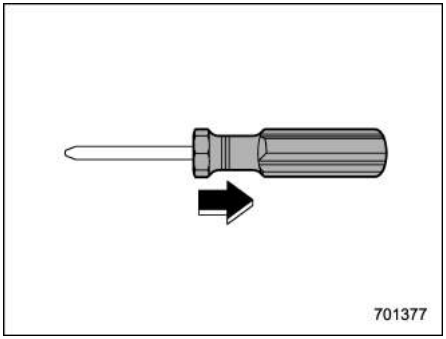


3. Remove the grip portion of the screwdriver.

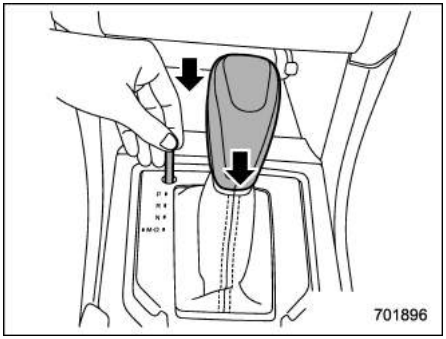


4. While depressing the brake pedal, insert a screwdriver into the hole, move it right and left while pushing the shift lock release button using a screwdriver, and then move the select lever.

If the select lever does not move after performing the above procedure, the shift lock system may be malfunctioning. We recommend that you contact a SUBARU dealer for an inspection as soon as possible.

## ■ Driving tips

**⚠ CAUTION**

**If the accelerator and brake pedals are depressed at the same time, driving torque may be restrained. This is not a malfunction.**

- Always apply the foot or parking brake when the vehicle is stopped in the “D” or “R” position.
- Always apply the parking brake when parking your vehicle. Do not hold the vehicle with only the mechanical friction of the transmission.
- Do not keep the vehicle in a stationary position on an uphill grade by using the “D” position. Use the brake instead.
- The engine may, on rare occasions, knock when the vehicle rapidly accelerates or rapidly pulls away from a standstill. This phenomenon does not indicate a malfunction.

# Power steering

The steering wheel is power-assisted with an electric motor. The power steering system operates only while the engine is running.

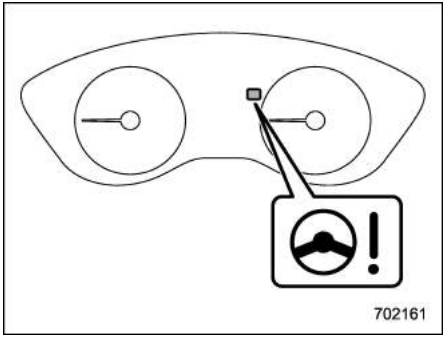


**Power steering warning light**

When the ignition switch is turned to the “ON” position, the power steering warning light on the combination meter illuminates to inform the driver that the warning system is functioning properly. Then, if the engine started, the warning light turns off to inform the driver that the steering power assist is operational.

**CAUTION**

**While the power steering warning light is illuminated, there may be more resistance when the steering wheel is operated. We recommend that you drive carefully to the nearest SUBARU dealer and have the vehicle inspected immediately.**

## NOTE

**If the steering wheel is operated in the following ways, the power steering control system may temporarily limit the power assist in order to prevent the system components from overheating.**

- **The steering wheel is operated frequently and turned sharply while the vehicle is maneuvered at extremely low speeds, such as while frequently turning the steering wheel during parallel parking.**
- **The steering wheel remains in the fully turned position for a long period of time.**

**At this time, there will be more resistance when steering. However this is not a malfunction. Normal steering force will be restored after the steering wheel is not operated for a while and the power steering control system has an opportunity to cool down. However, if the power steering is operated in a non-standard way which causes power assist limitation to occur too frequently, this may result in a malfunction of the power steering control system.**

# Braking

## ■ Braking tips

**WARNING**

**Never rest your foot on the brake pedal while driving. This can cause dangerous overheating of the brakes and needless wear on the brake pads and linings.**

### ▼ When the brakes get wet

When driving in rain or after washing the vehicle, the brakes may get wet. As a result, brake stopping distance will be longer. To dry the brakes, drive the vehicle at a safe speed while lightly depressing the brake pedal to heat up the brakes.

### ▼ Use of engine braking

Remember to make use of engine braking in addition to foot braking. When descending a grade, if only the foot brake is used, the brakes may start working improperly because of brake fluid overheating, caused by overheated brake pads. To help prevent this, shift into a lower gear to get stronger engine braking.

– CONTINUED –

### ▼ Braking when a tire is punctured

Do not depress the brake pedal suddenly when a tire is punctured. This could cause a loss of control of the vehicle. Keep driving straight ahead while gradually reducing speed. Then slowly pull off the road to a safe location.

## ■ Brake system

### ▼ Two separate circuits

Your vehicle has two separate circuit brake systems. Each circuit works diagonally across the vehicle. If one circuit of the brake system should fail, the other half of the system still works. If one circuit fails, the brake pedal will go down much closer to the floor than usual and you will need to press it down much harder. And a much longer distance will be needed to stop the vehicle.

### ▼ Brake booster

The brake booster uses engine manifold vacuum to assist braking force. Do not turn off the engine while driving because that will turn off the brake booster, resulting in poor braking power.

The brakes will continue to work even when the brake booster completely stops functioning. If this happens, you will have to depress the pedal much harder than during normal braking, and the braking distance will increase.

### ▼ Supplemental booster function when vacuum pressure fails

While the ignition switch is turned “ON” and the engine is running, the supplemental booster function operates when the brake booster performance is decreased due to insufficient vacuum boost.

When the brake pedal is depressed while the supplemental booster function is operating, an operation sound and brake pedal vibration may be generated. This is not a malfunction.

### ▼ Brake assist system

**⚠ WARNING**

**Do not be overconfident about the brake assist. It is not a system that brings more braking ability to the vehicle beyond its braking capability. Always use the utmost care when driving regarding vehicle speed and safe distance.**

**⚠ CAUTION**

**When you need to brake suddenly, continue depressing the brake pedal strongly to bring the effect of the brake assist.**

Brake assist is a driver assistance system. It assists the brake power when the driver cannot depress the brake pedal strongly and the brake power is insufficient.

Brake assist generates the brake power according to the speed at which the driver depresses the brake pedal.

**NOTE**

**When you depress the brake pedal strongly or suddenly, the following phenomena occur. However, even though these occur, they do not indicate any malfunctions, and the brake assist system is operating properly.**

- **You might feel that the brake pedal is applied by lighter force and generates a greater braking force.**
- **You might hear the sound of the ABS operating from the engine compartment.**

### ▼ Emergency Stop Signal

The Emergency Stop Signal is a function that automatically blinks the hazard warning flasher in short intervals when the brake pedal is depressed suddenly. The rapid flashing of the hazard warning flasher cautions the vehicles behind and reduces the possibility of a collision.

**⚠ CAUTION**

**The Emergency Stop Signal is activated in priority over the turn signal.**

#### ▽ Operating condition

The Emergency Stop Signal activates when all of the following conditions are met.

- The hazard warning flasher is off.
- The vehicle speed is 60 km/h (37 mph) or more.
- The system judges that sudden braking has occurred based on the vehicle deceleration when the brake pedal is depressed.

#### ▽ Automatic cancel

The Emergency Stop Signal is canceled in either of the following circumstances.

- The hazard warning flasher is turned on.
- The brake pedal is released.
- The system judges that sudden braking has ended, based on the vehicle deceleration.

The operational/non-operational setting of the Emergency Stop Signal can be changed by a SUBARU dealer. For details, we recommend that you contact your SUBARU dealer.

## ■ Disc brake pad wear warning indicators

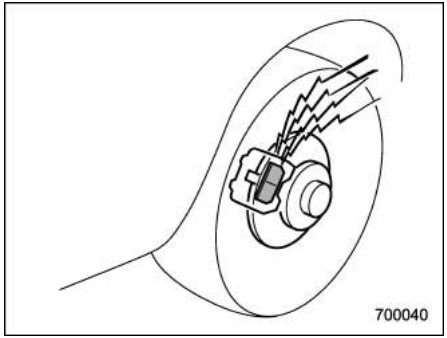


The disc brake pad wear warning indicators on the disc brakes give a warning noise when the brake pads are worn.

If a squeaking or scraping noise is heard from the disc brakes while braking, we recommend that you immediately have your vehicle checked by your SUBARU dealer.

## ABS (Anti-lock Brake System)

ABS prevents the lock-up of wheels which may occur during sudden braking or braking on slippery road surfaces. This helps prevent the loss of steering control and directional stability caused by wheel lock-up.

When ABS is operating, you may hear a chattering noise or feel a slight vibration in the brake pedal. This is normal when the ABS operates.

ABS will not operate when the vehicle speed is below approximately 10 km/h (6 mph).

**WARNING**

**Always use the utmost care in driving – overconfidence because you are driving with an ABS equipped vehicle could easily lead to a serious accident.**

**CAUTION**

- **ABS does not always decrease stopping distance. You should always maintain a safe following distance from other vehicles.**
- **When driving on badly surfaced roads, gravel roads, icy roads, or over deep newly fallen snow, stopping distances may be longer for a vehicle with ABS than one without. When driving under these conditions, therefore, reduce your speed and leave ample distance from other vehicles.**
- **When tire chains are installed, stopping distances may be longer for a vehicle with ABS than one without. Be sure to reduce your speed and maintain a safe distance from the vehicle in front.**
- **When you feel ABS operating, you should maintain constant brake pedal pressure. Do not pump the brake pedal since doing so may defeat the operation of ABS.**

### ■ ABS self-check

Just after the vehicle is started, you may feel on the brake pedal a vibration similar to when ABS operates, and you may also hear the sound of ABS working from the engine compartment. This is caused by an automatic functional test of ABS being carried out and does not indicate a malfunction.

### ■ ABS warning light

Refer to “ABS warning light” ☞3-22.

## Electronic Brake Force Distribution (EBD) system

The EBD system maximizes the effectiveness of the brakes by allowing the rear brakes to supply a greater proportion of the braking force. It functions by adjusting the distribution of braking force to the rear wheels in accordance with the vehicle's loading condition and speed.

The EBD system is an integral part of the ABS system and uses some of the ABS system's components to perform its function of optimizing the distribution of braking force. If any of the ABS components used by the EBD system malfunction, the EBD system also stops working.

When the EBD system is operating, you may hear a chattering noise or feel a slight vibration in the brake pedal. This is normal and does not indicate a malfunction.

### ■ Steps to take if EBD system fails

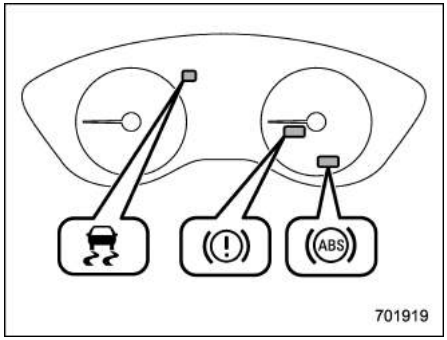


If a malfunction occurs in the EBD system, the system stops working and the following warning lights illuminate simultaneously.

- Brake system warning light
- ABS warning light
- Vehicle Dynamics Control warning light

The EBD system may be malfunctioning if all the warning lights illuminate simultaneously during driving.

Even if the EBD system malfunctions, the conventional braking system will still function. However, the rear wheels will be more prone to locking when the brakes are applied harder than usual and the vehicle's motion may therefore become somewhat harder to control.

If all the warning lights illuminate simultaneously, take the following steps.

1. Stop the vehicle in the nearest safe, flat location.
2. Apply the parking brake and turn off the engine.
3. Restart the engine.
4. Release the parking brake.

**If all the warning lights do not come back on:**

The EBD system have a possible malfunction. We recommend that you drive carefully to the nearest SUBARU dealer and have the system inspected.

**If all the warning lights stay illuminated or come back on after approximately 2 seconds:**

1. Turn off the engine again.
2. Apply the parking brake.
3. Check the brake fluid level. For details about checking the brake fluid level, refer to "Checking the fluid level" ☞11-22.

- If the brake fluid level is not below the "MIN" mark, the EBD system may be malfunctioning. We recommend that you drive carefully to the nearest SUBARU dealer and have the system inspected.
- If the brake fluid level is below the "MIN" mark, DO NOT drive the vehicle. Instead,

– CONTINUED –

we recommend that you have the vehicle towed to the nearest SUBARU dealer for repair.

**WARNING**

- **Driving with the brake system warning light illuminated is dangerous. This indicates your brake system may not be working properly. If the light remains illuminated, we recommend that you have the brakes inspected by a SUBARU dealer immediately.**
- **If at all in doubt about whether the brakes are operating properly, do not drive the vehicle. We recommend that you have your vehicle towed to the nearest SUBARU dealer for repair.**

## Vehicle Dynamics Control system

**WARNING**

**Always use the utmost care in driving – overconfidence because you are driving a vehicle with the Vehicle Dynamics Control system could easily lead to a serious accident.**

**CAUTION**

- **Even if your vehicle is equipped with Vehicle Dynamics Control, winter tires or snow chains should be used when driving on snow-covered or icy roads; in addition, vehicle speed should be reduced considerably. Simply having a Vehicle Dynamics Control system does not guarantee that the vehicle will be able to avoid accidents in any situation.**
- **When a vehicle is fitted with snow chains, the effectiveness of the Vehicle Dynamics Control system is reduced and this should be taken into account when driving the vehicle in such a condition.**
- **Activation of the Vehicle Dynamics Control system is an indication that the road being travelled on has a slippery surface; since having Vehicle Dynamics Control is no guarantee that full vehicle control will be maintained at all times and under all conditions, its activation should be seen as a sign that the speed of the vehicle should be reduced considerably.**
- **Whenever suspension components, steering components, or an axle are removed from a vehicle, we recommend that you have an inspection of that system performed by an authorized SUBARU dealer.**
- **The following precautions should be observed in order to ensure that the Vehicle Dynamics Control system is operating properly:**
  - **All four wheels should be fitted with tires of the same size, type, and brand. Furthermore, the amount of wear should be the same for all four tires.**

**– Keep the tire pressure at the proper level as shown on the label attached to the vehicle's door pillar.**

**– Use only the special temporary spare tire to replace a flat tire. With a temporary spare tire, the effectiveness of the Vehicle Dynamics Control system is reduced and this should be taken into account when driving the vehicle in such a condition.**

- **If non-matching tires are used, the Vehicle Dynamics Control system may not operate correctly.**
- **The Vehicle Dynamics Control system helps prevent unstable vehicle motion such as skidding using control of the brakes and engine power. Do not turn off the Vehicle Dynamics Control system unless it is absolutely necessary. If you must turn off the Vehicle Dynamics Control system, drive very carefully according to the road surface condition.**

In the event of wheelspin and/or skidding on a slippery road surface and/or during cornering and/or an evasive maneuver, the Vehicle Dynamics Control system adjusts the engine's output and the wheels' respective braking forces to help maintain traction and directional control.

- **Traction Control Function**

The traction control function is designed to prevent spinning of the driving wheels on slippery road surfaces, thereby helping to maintain traction and directional control. Activation of this function is shown by flashing the Vehicle Dynamics Control operation indicator light.

- **Skid Suppression Function**

The skid suppression function is designed to help maintain directional stability by suppressing the wheels' tendency to slide sideways during steering operations. Activation of this function is shown by flashing of the Vehicle Dynamics Control operation indicator light.

## NOTE

- **The Vehicle Dynamics Control system may be considered normal when the following conditions occur.**

  **– Slight twitching of the brake pedal is felt.**

  **– The vehicle or steering wheel shakes to a small degree.**

  **– An operating sound from the engine compartment is heard briefly when starting the engine and when driving off after starting the engine.**

  **– The brake pedal seems to jolt when driving off after starting the engine.**

- **In the following circumstances, the vehicle may be less stable than it feels to the driver. The Vehicle Dynamics Control System may therefore operate. Such operation does not indicate a system malfunction.**

  **– on gravel-covered or rutted roads**

  **– on unfinished roads**

  **– when the vehicle is towing a trailer**

  **– when the vehicle is fitted with snow tires or winter tires**

- **Activation of the Vehicle Dynamics Control system will cause operation of the steering wheel to feel slightly different compared to that for normal conditions.**
- **It is always important to reduce speed when approaching a corner, even if your vehicle is equipped with the Vehicle Dynamics Control system.**

*– CONTINUED –*

- **Always turn off the engine before replacing a tire. Failure to do so may render the Vehicle Dynamics Control system unable to operate correctly.**

## ■ Vehicle Dynamics Control system monitor

Refer to “Vehicle Dynamics Control warning light/Vehicle Dynamics Control operation indicator light” ☞3-22 and “Vehicle Dynamics Control OFF indicator light” ☞3-24.

## ■ Vehicle Dynamics Control OFF switch

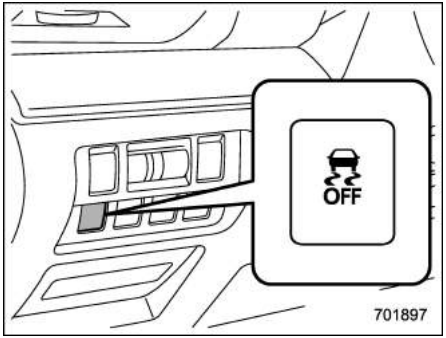


**LHD models**

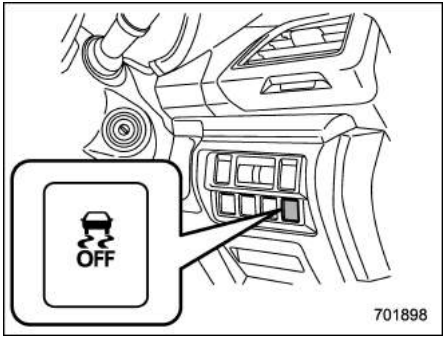


**RHD models**

Press the Vehicle Dynamics Control OFF switch to deactivate the Vehicle Dynamics Control system. Creating adequate driving wheel slip by deactivating the Vehicle Dynamics Control system may help to escape from the following situations. Use the Vehicle Dynamics Control OFF switch as necessary.

- a standing start on a steeply sloping road with a snowy, gravel-covered, or otherwise slippery surface
- extrication of the vehicle when its wheels are stuck in mud or deep snow

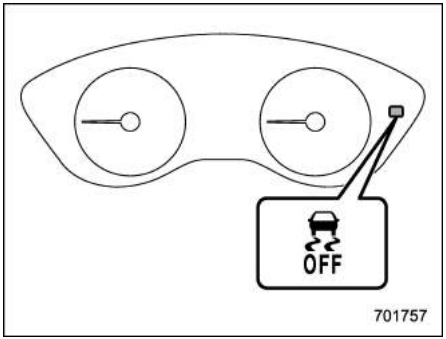


**Vehicle Dynamics Control OFF indicator light**

When the switch is pressed during engine operation, the Vehicle Dynamics Control OFF indicator light illuminates. The Vehicle Dynamics Control system will be deactivated and the vehicle will behave like a model not equipped with the Vehicle

Dynamics Control system. When the switch is pressed again to reactivate the Vehicle Dynamics Control system, the indicator light turns off.

With the Vehicle Dynamics Control system deactivated, traction and stability enhancement offered by Vehicle Dynamics Control system is unavailable. Therefore you should not deactivate the Vehicle Dynamics Control system except under above-mentioned situations.

## NOTE

- **When the switch has been pressed to deactivate the Vehicle Dynamics Control system, the Vehicle Dynamics Control system automatically reactivates itself the next time the ignition switch is turned to the "LOCK"/"OFF" position and the engine is restarted.**
- **If the switch is pressed and held for 30 seconds or longer, the indicator light turns off, the Vehicle Dynamics Control system is activated, and the system ignores any further pressing of the switch. To make the switch usable again, turn the ignition switch to the "LOCK"/"OFF" position and restart the engine.**
- **When the switch is pressed to deactivate the Vehicle Dynamics Control system, the vehicle's running performance is comparable with that of a vehicle that does not have a Vehicle Dynamics Control system. Do not deactivate the Vehicle Dynamics Control system except when absolutely necessary.**
- **Even when the Vehicle Dynamics Control system is deactivated, components of the brake control system may still activate. When the brake control system is activated, the Vehicle Dynamics Control operation indicator light illuminates.**

# X-MODE

**WARNING**

- **Always use the utmost care in driving – overconfidence because you are driving a vehicle with X-MODE could easily lead to a serious accident.**
- **Always use the utmost care in driving – overconfidence because you are driving a vehicle with hill descent control function could easily lead to a serious accident. Be especially careful, and depress the brake pedal if necessary when driving on extremely steep downhill, frozen, muddy or sandy roads. Failure to control the vehicle's speed may cause a loss of control and result in a serious accident.**

**CAUTION**

- **Even if your vehicle is equipped with X-MODE, winter tires or snow chains should be used when driving on snow-covered or icy roads; in addition, vehicle speed should be reduced con-**

– CONTINUED –

**siderably. Simply having X-MODE does not guarantee that the vehicle will be able to avoid accidents in any situation.**

- **Activate the X-MODE when you encounter a very slippery surface at low speed. However, having X-MODE is no guarantee that full vehicle control will be maintained at all times and under all conditions. Even when activating X-MODE, reduce the vehicle speed considerably.**
- **Whenever suspension components, steering components, or an axle are removed from a vehicle, we recommend that you have the system inspected by an authorized SUBARU dealer.**
- **The following precautions should be observed in order to ensure that the X-MODE is operating properly:**
  - **All four wheels should be fitted with tires of the same size, type, and brand. Furthermore, the amount of wear should be the same for all four tires.**
  - **Keep the tire pressure at the proper level as shown on the label attached to the vehicle's door pillar.**
  - **Use only the special temporary spare tire to replace a flat tire. With a normal temporary spare tire, the effectiveness of the X-MODE is reduced and this should be taken into account when driving the vehicle in such a condition.**
- **If the hill descent control function has operated continuously for a long time, the temperature of the brake disc may increase and the hill descent control function may be temporarily disabled. In this case, the hill descent control indicator will disappear. When the hill descent control indicator disappears, the hill descent control function is disabled.**

X-MODE is the integrated control system of the engine, AWD and Vehicle Dynamics Control system, etc. for driving with bad road conditions. Using X-MODE, you can drive more comfortably even in slippery road conditions including uphill and downhill.

X-MODE has the following functions.

- **Hill descent control function:**

Using the hill descent control function, you can keep the vehicle at a consistent speed driving downhill. If the vehicle speed is likely to increase, the brake control system will be activated to adjust the vehicle speed.

- **Driving ability control:**

This mode increases the hill-climbing ability and driving ability as well as enabling smooth application of torque for easier control of the steering wheel.

## ■ To activate/deactivate the X-MODE

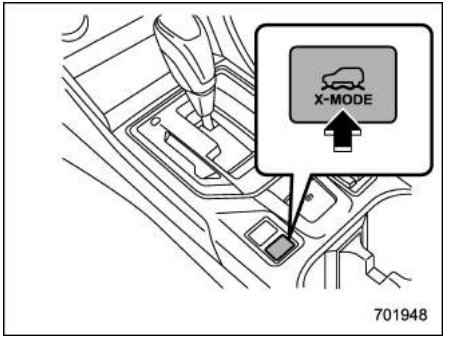


**X-MODE switch**

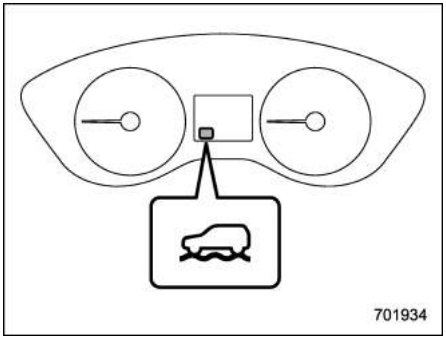


**X-MODE indicator (type A)**

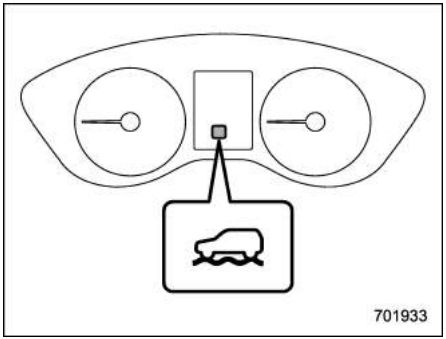


**X-MODE indicator (type B)**

**To activate:**

Press the X-MODE switch. While the X-MODE is activated, the X-MODE indicator appears.

**To deactivate:**

Press the X-MODE switch again. The X-MODE indicator will disappear when the X-MODE is deactivated.

## NOTE

- **Even if you try to activate the X-MODE by pressing the X-MODE switch when the vehicle speed is 20 km/h (12 mph) or more, the X-MODE will not be activated. At this time, a buzzer will sound twice.**
- **If the vehicle speed reaches 40 km/h (25 mph) or more while the X-MODE is activated, a buzzer will sound once and the X-MODE will be deactivated.**
- **For models with Auto Start Stop system, the system will be stopped while the X-MODE is activated.**
- **While the engine is running, if any of the following conditions is met, the X-MODE will be deactivated. In this case, it is not possible to activate the X-MODE.**
  - **– The malfunction indicator light (Check Engine light) illuminates.**
  - **– The AT OIL TEMP warning light flashes.**
  - **– The ABS warning light illuminates.**
  - **– The Vehicle Dynamics Control warning light illuminates.**
- **If there is a possibility that the engine could overheat because of a temperature increase of the engine coolant, it is not possible to activate the X-MODE. Even while the X-MODE is activated, the X-MODE will be deactivated when the engine coolant temperature increases.**

## ■ Hill descent control function

The hill descent control function will be in standby mode when the X-MODE is activated and the vehicle speed is less than approximately 20 km/h (12 mph).

The function will operate when the vehicle speed is less than approximately 20 km/h (12 mph) and the accelerator ratio is less than approximately 10%.

The function will turn off when the vehicle speed is more than approximately 20 km/h (12 mph) and the accelerator pedal is depressed.

**⚠ CAUTION**

**The braking power of the hill descent control function may not be sufficient when stronger braking power is needed (e.g., when towing a trailer).**

*– CONTINUED –*

## NOTE

- **Even while the hill descent control function is operating, you can vary the vehicle speed by using the brake pedal or accelerator pedal.**
- **During braking by the hill descent control function, the hill descent control indicator will flash.**
- **The hill descent control function is operable regardless of the gradient of the road.**
- **The hill descent control function may be considered normal when the following conditions occur.**
  - **An operating sound is heard briefly from the engine compartment while the hill descent control function is operating.**
  - **The sensation of depressing the brake pedal is different, (harder than usual etc.) when the brake pedal is depressed during hill descent control function operation.**

### ▼ Hill descent control indicator

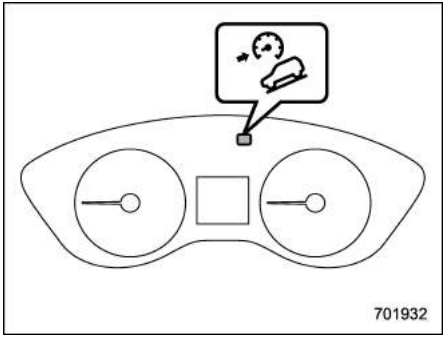


**Hill descent control indicator (type A)**

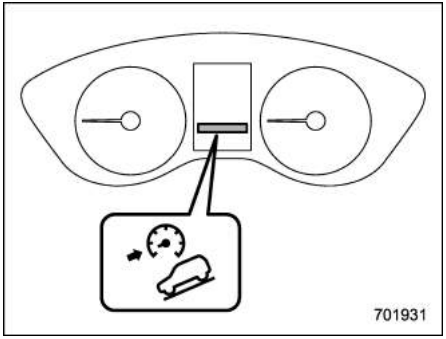


**Hill descent control indicator (type B)**

This indicator appears while the hill descent control function is in the standby mode. It flashes while the function is operating. It will disappear when the function is in the disabled mode. When this function is changed from operational to non-operational, it will disappear when the vehicle speed reaches more than approximately 30 km/h (18 mph).

## Parking your vehicle

**WARNING**

- **Never leave unattended children or pets in the vehicle. They could accidentally injure themselves or others through inadvertent operation of the vehicle. Also, on hot or sunny days, the temperature in a closed vehicle could quickly become high enough to cause severe or possibly fatal injuries to them.**
- **Do not park the vehicle over flammable materials such as dry grass, waste paper or rags, as they may burn easily if they come near hot engine or exhaust system parts.**
- **Be sure to stop the engine if you take a nap in the vehicle. If engine exhaust gas enters the passenger compartment, occupants in the vehicle could die from carbon monoxide (CO) contained in the exhaust gas.**

### ■ Electronic parking brake

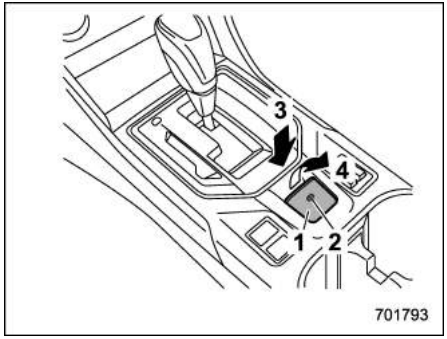


1) Parking brake switch
2) Indicator light
3) Release the electronic parking brake
4) Apply the electronic parking brake

**WARNING**

- **Before exiting the vehicle, make sure that you turn off the engine. Otherwise, the parking brake may be released and an accident may occur.**
- **If the electronic parking brake warning light illuminates, the electronic parking brake system may be malfunctioning. Immediately stop your vehicle in a safe location, use tire stops under the tires to prevent the vehicle from moving and we recommend that you contact your SUBARU dealer.**

**CAUTION**

- **When the electronic parking brake system has a malfunction and the parking brake cannot be applied, we recommend that you contact your SUBARU dealer immediately for an inspection. If you have to park your vehicle in such conditions, perform the following procedure.**
  - **Stop your vehicle in a flat location.**
  - **Shift the select lever in the "P" position. When the select lever cannot be shifted into the "P" position, you must release shift lock. Refer to "Shift lock function" ☞7-17.**
  - **Use tire stops under the tires to prevent the vehicle from moving.**
- **Never drive while the parking brake is applied because this will cause unnecessary wear on the brake pads. Before starting to**

– CONTINUED –

**drive, always make sure that the parking brake has been released and the electronic parking brake indicator light has turned off.**

- **The braking power of the electronic parking brake may not be sufficient when strong braking power is needed (e.g., when parking on a steep slope while towing a trailer).**

Your vehicle is equipped with an electronic parking brake. You can apply/release the parking brake by operating the parking brake switch.

**To apply:** Pull up the parking brake switch.

**To release:** Press the parking brake switch firmly while the ignition switch is in the "ON" position and the brake pedal is depressed.

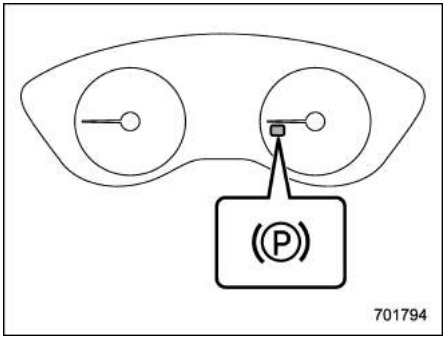


**Electronic parking brake indicator light**

When the parking brake is applied while the ignition switch is in the "ON" position, the following indicator lights illuminate.

- the indicator light on the parking brake switch
- the electronic parking brake indicator light on the combination meter (for details, refer to "Electronic parking brake indicator light" ☞3-25.)

## NOTE

- **If the parking brake switch is pressed with the ignition switch in the "ACC" or "LOCK"/"OFF" position, the parking brake is not released.**
- **If the parking brake switch is pressed without depressing the brake pedal, the parking brake is not released.**
- **The electronic parking brake system uses motors to apply the parking brake. Therefore, operating sounds from the motors will be heard when applying or releasing the parking brake. Make sure that the motor sounds are heard when applying or releasing the parking brake. Additionally, the motor sounds will be heard when operating the select lever or depressing the brake pedal. This is not a malfunction. The sounds will occur when the electronic parking brake system automatically controls the motors.**
- **When the electronic parking brake system has a malfunction or the electronic parking brake operation is prohibited temporarily, if the parking brake switch is operated, a chirp sound is heard and the electronic parking brake indicator light flashes.**
- **When the electronic parking brake is applied under any of the following conditions, the operating sound of the electronic parking brake may be heard several minutes after the electronic parking brake indicator light illuminates. However, this does not indicate a malfunction.**

**– The parking brake overheats.**
**– The vehicle is parked on a steep slope.**
**– You operate the parking brake switch after the ignition switch has been turned off.**

**● If you use the electronic parking brake under the following conditions, the electronic parking brake indicator light may flash.**
**– The parking brake overheats.**
**– The vehicle is stopped on a steep slope.**

**Even in these cases, the electronic parking brake will operate. However, use tire stops because the vehicle may move.**

**● The Auto Start Stop system (if equipped) is deactivated while the electronic parking brake is applied.**

**● If you operate the electronic parking brake switch while the Auto Start Stop system (if equipped) is activated, the Auto Start Stop system will be deactivated. The electronic parking brake will activate after the engine is restarted. After the electronic parking brake indicator light is illuminated, release your foot from the brake pedal.**

**● When starting the engine or restarting the engine using the Auto Start Stop system (if equipped), if you operate the electronic parking brake switch, the electronic parking brake indicator light may flash temporarily. However, this is not a malfunction if the light turns off after the electronic parking brake is deactivated.**

### ▼ Automatic release function by accelerator pedal

The electronic parking brake system has an automatic release function. The parking brake will be automatically released by depressing the accelerator pedal. However, the automatic release function does not operate under the following conditions.

- Any door is open.
- The driver's seatbelt is not fastened.
- The select lever is in the "P" or "N" position.

If the parking brake is automatically released, the electronic parking brake indicator light and the indicator light on the parking brake switch turn off.

## NOTE

**While pulling up the parking brake switch, the parking brake will not be automatically released even when the accelerator pedal is depressed.**

### ▼ Auto Vehicle Hold function

The Auto Vehicle Hold function will automatically keep the vehicle stopped even after releasing the brake pedal when the vehicle is at a complete stop, such as at traffic signals. The function will be canceled by either of the following operations.

- Depressing the accelerator pedal
- Depressing the brake pedal again

**⚠ WARNING**

- **Do not use the Auto Vehicle Hold function on a steep hill or slippery road. The vehicle may move even when using the Auto Vehicle Hold function, causing serious injury or accidents.**
- **Do not use the Auto Vehicle Hold function to park the vehicle. The vehicle may move unexpectedly, causing serious injury or accidents. Make sure to shift the select lever to the "P" position and apply the electronic parking brake in the following cases.**

– CONTINUED –

- When you are going to park your vehicle
- When passengers are getting in or out of the vehicle
- When you are loading or unloading

- When using the Auto Vehicle Hold function, do not release the brake pedal before the Auto Vehicle Hold operation indicator illuminates. The vehicle may move unexpectedly, causing serious injury or accidents.
- Deactivate the Auto Vehicle Hold function in the following cases. Otherwise, the vehicle may move unexpectedly, causing serious injury or accidents.
  - When washing your vehicle in an automatic car wash
  - When being towed
  - When towing other vehicle
  - When towing a trailer

**CAUTION**

When stopping on a steep slope with the Auto Vehicle Hold function turned on, the electronic parking brake may be automatically applied. Then the electronic parking brake indicator light will flash. In such a case, depress and hold the brake pedal while stopping. Otherwise, the vehicle may move.

## NOTE

We recommend turning on the Auto Vehicle Hold function when stopping on an incline. If the Auto Vehicle Hold function is turned off, the vehicle may roll backward when driving off.

▽ To turn on/off the Auto Vehicle Hold function

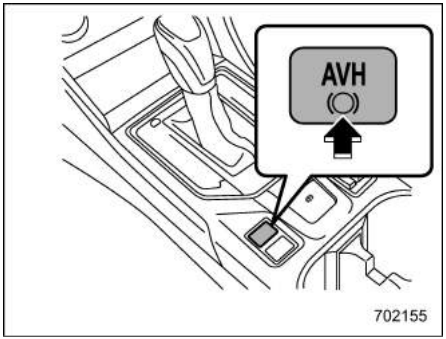


Auto Vehicle Hold switch

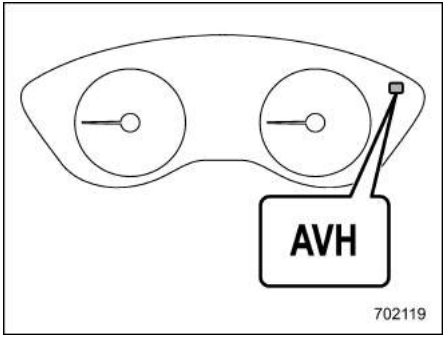


Auto Vehicle Hold ON indicator light

**To turn on:**

Press the Auto Vehicle Hold switch when the Auto Vehicle Hold ON indicator light is OFF. Then the Auto Vehicle Hold ON indicator light will illuminate.

Even after turning on the Auto Vehicle Hold function, it will automatically turn off once the ignition switch is turned to the “LOCK”/“OFF” position. The function will remain turned off when the ignition switch is turned back to the “ON” position.

**To turn off:**

Press the Auto Vehicle Hold switch when the Auto Vehicle Hold ON indicator light illuminates. Then the Auto Vehicle Hold ON indicator light will turn off.

## NOTE

- **When the electronic parking brake system has a malfunction while the Auto Vehicle Hold function is turned on, a chirp will sound, the Auto Vehicle Hold ON indicator light will turn off and the brake system warning light will turn on.**
- **If you press and hold the Auto Vehicle Hold switch for more than 30 seconds, the Auto Vehicle Hold ON indicator light will turn off, and the system will ignore any further pressing of the switch. To activate the switch again, restart the engine.**
- **When the Auto Vehicle Hold function is deactivated while the Auto Vehicle Hold function has a malfunction, if you press the Auto Vehicle Hold switch, a chirp will sound.**

### ▽ To operate the Auto Vehicle Hold function

Stop the vehicle by depressing the brake pedal when all of the following conditions are met. Then the Auto Vehicle Hold function will operate.

- All doors are closed.
- The driver’s seatbelt is fastened.
- The select lever is in a position other than the “P” position.

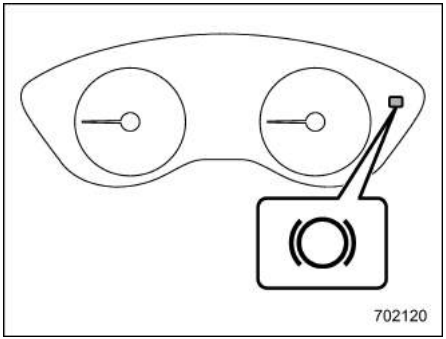


**Auto Vehicle Hold operation indicator light**

While the vehicle is kept stopped by the Auto Vehicle Hold function, the Auto Vehicle Hold operation indicator light will illuminate.

### ▽ To release the Auto Vehicle Hold function

Perform any of the following operations to release the Auto Vehicle Hold function.

- Depress the accelerator pedal.
- Depress the brake pedal again.
- Apply the electronic parking brake.
- Shift the select lever to the “P” position with the brake pedal pressed.
- Press the Auto Vehicle Hold switch with the brake pedal pressed.

When the Auto Vehicle Hold function is released, the Auto Vehicle Hold operation indicator light will turn off.

Under any of the following conditions, the Auto Vehicle Hold function will be automatically released and the electronic parking brake will be automatically applied.

- The Auto Vehicle Hold function has been in operation for 10 minutes.
- The driver’s seatbelt is unfastened.
- The driver’s door is opened.
- The ignition switch is turned to the “LOCK”/“OFF” position.
- The vehicle is stopped on a steep

– CONTINUED –

slope.

- The Auto Vehicle Hold function is malfunctioning.

In such cases, the Auto Vehicle Hold operation indicator light will turn off and the electronic parking brake indicator light will illuminate.

▽ **Tips**

- When the electronic parking brake is automatically applied with the vehicle kept stopped by the Auto Vehicle Hold function, release the electronic parking brake by either of the following operations before starting off. Then make sure that the electronic parking brake indicator light is off.
  – Depress the accelerator pedal with the driver's seatbelt fastened and with the doors closed.
  – Press the electronic parking brake switch with the brake pedal depressed.
- Under certain conditions, including a malfunction of the Auto Vehicle Hold, a warning buzzer will sound and a warning message will appear on the combination meter display (color LCD). All warning messages should be strictly observed.
- On a steep slope, the vehicle cannot be kept stopped by the Auto Vehicle Hold function. In such a case, depress and hold the brake pedal.
- When stopping on a steep slope with the Auto Vehicle Hold function activated, the electronic parking brake may automatically applied after stopping, then the electronic parking brake indicator light may flash. In such a case, depress and hold the brake pedal while stopped. Otherwise, the vehicle may move. When getting out of the vehicle, stop the vehicle on a flat surface, then apply the electronic parking brake.
- If the Auto Vehicle Hold ON indicator light does not illuminates even after pressing the Auto Vehicle Hold switch with the operating conditions met, the function may have a malfunction. We recommend that you contact your SUBARU dealer for an inspection.
- You may hear a sound while the Auto Vehicle Hold function is keeping your vehicle stopped. This is normal, and does not represent a malfunction.
- While the vehicle is kept stopped by the Auto Vehicle Hold function, the brake pedal may feel stiff. However, this is not a malfunction.
- When using the Auto Vehicle Hold function, depress the brake pedal firmly. Otherwise, the Auto Vehicle Hold may not operate (all models), or the Auto Start Stop system may not operate even when the Auto Vehicle Hold has been operated (if equipped).
- When the Auto Vehicle Hold switch is pressed and held for more than 30 seconds, the Auto Vehicle Hold ON indicator light will turn off and further operation of the switch will be ignored. To make the switch usable again, turn the ignition switch to the "LOCK"/"OFF" position and then turn it to the "ON" position.

▼ **Emergency brake**

**⚠ CAUTION**

**Use the emergency brake only in case of an emergency. If the emergency brake is excessively used, the brake parts will wear down faster or the brake may not work sufficiently due to rear wheel brake overheating.**

## NOTE

**While using the emergency brake, the electronic parking brake indicator light and the indicator light on the parking brake switch illuminate and a chirp sounds.**

If the foot brake has a malfunction, you can stop the vehicle by pulling the parking brake switch continuously.

While applying the emergency brake, the

electronic parking brake indicator light and the indicator on the parking brake switch illuminate and a chirp sounds.

▼ **Electronic parking brake system warning**

**⚠ CAUTION**

**If the electronic parking brake indicator light flashes, the electronic parking brake system may be malfunctioning. Immediately stop your vehicle in the nearest safe location and we recommend that you contact your SUBARU dealer.**

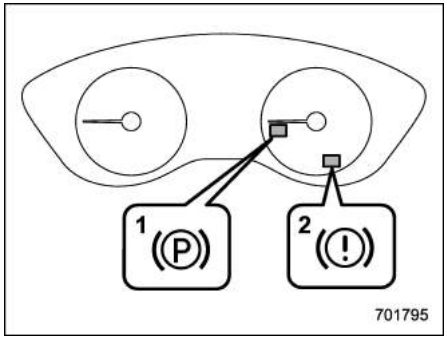


1) Electronic parking brake indicator light
2) Electronic parking brake warning light

If a malfunction occurs in the electronic parking brake system, the electronic parking brake warning light illuminates and/or the electronic parking brake indicator light flashes. Refer to “Electronic parking brake warning light/Vacuum pressure system warning light (yellow)” ☞3-25 and “Electronic parking brake indicator light” ☞3-25.

## ■ Parking tips

When parking your vehicle, always perform the following items.

- Apply the parking brake.
- Put the select lever in the “P” (Park) position.

Never rely on the mechanical friction of the transmission alone to hold the vehicle.

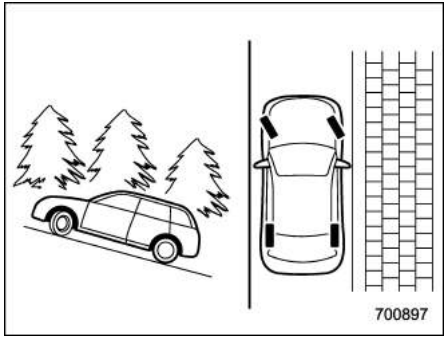


When parking on a hill, always turn the steering wheel. When the vehicle is headed up the hill, the front wheels should be turned away from the curb.

– CONTINUED –

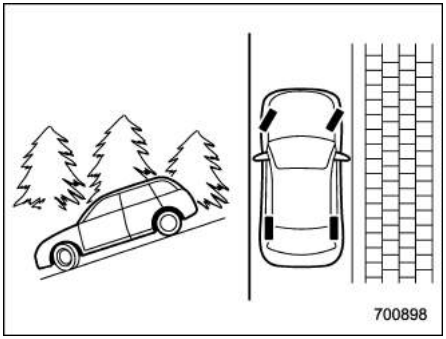


When facing downhill, the front wheels should be turned into the curb.

## Hill start assist system

**CAUTION**

- **The Hill start assist system is a device only for helping the driver to START the vehicle on an uphill grade. To prevent accidents when the vehicle is parked on a slope, be sure to firmly set the parking brake. When setting the parking brake, make sure that the vehicle remains stationary when the brake pedal is released.**
- **Do not turn the ignition switch to the "LOCK"/"OFF" position while the Hill start assist system is operating. The Hill start assist system will deactivate, causing an accident.**

The Hill start assist system is a device to make the following vehicle operations easier.

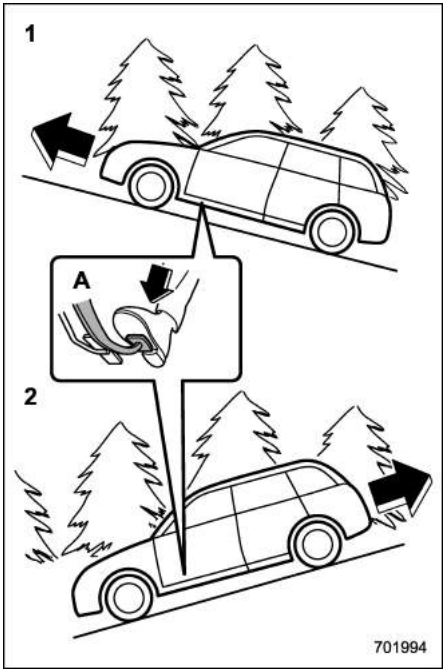


1) Starting forward facing uphill
2) Starting backward facing downhill
A) Brake pedal

In both these cases, the Hill start assist system operates under the following condition.

- When the vehicle has stopped with the brake pedal depressed.

Braking power is maintained temporarily (for approximately 2 seconds) by the Hill start assist system after the brake pedal is released. The driver is therefore able to start the vehicle in the same way as on a level grade, just using the accelerator pedal.

If the braking power of the Hill start assist system is insufficient after the brake pedal is released, apply more braking power by depressing the brake pedal again.

The Hill start assist system may not operate on slight grades. Also, the Hill start assist system does not operate in the following cases.

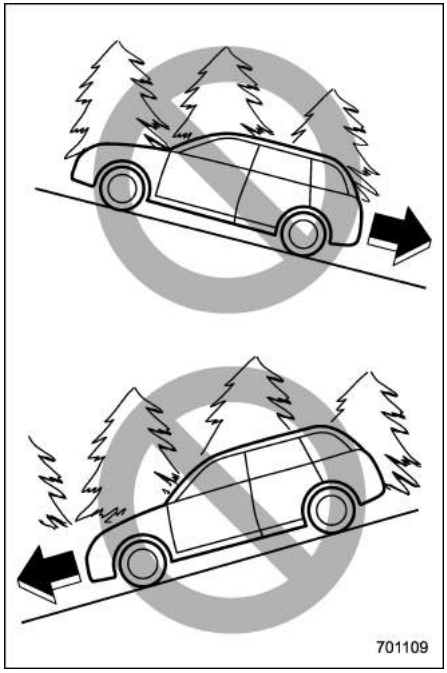


- When starting backward facing uphill
- When starting forward facing downhill
- While the parking brake is applied.
- While the ignition switch is in the “ACC” or “LOCK”/“OFF” position.
- While the Vehicle Dynamics Control warning light is illuminated. Refer to “Vehicle Dynamics Control warning light/ Vehicle Dynamics Control operation indicator light” ☞3-22.
- While the Auto Start Stop warning light is illuminated. Refer to “Auto Start Stop warning light/Auto Start Stop OFF indicator light (yellow)” ☞3-35.

When starting in reverse and using the Hill start assist system, a braking effect may be felt even after the brake pedal has been released.

**⚠ CAUTION**

**The braking power of the Hill start assist system may not be sufficient when strong braking power is needed (e.g., when towing a trailer).**

## NOTE

**A slight jolt may be felt when the vehicle begins to move forward after being reversed.**

## Tire pressure monitoring system (TPMS) (if equipped)

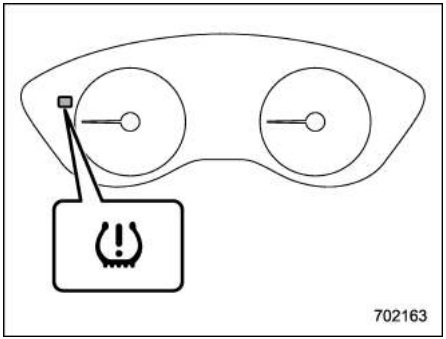


**Low tire pressure warning light**

The tire pressure monitoring system provides the driver with a warning message by sending a signal from a sensor that is installed in each wheel when a tire pressure is severely low relative to the selected TPMS mode. Refer to "Low tire pressure warning light" ☞3-20

The tire pressure monitoring system will activate only when the vehicle is driven at speeds above 40 km/h (25 mph). Also, this system may not react immediately to a sudden drop in tire pressure (for example, a blow-out caused by running over a sharp object).

**⚠ WARNING**

- **If the low tire pressure warning light illuminates while driving, never brake suddenly. Instead, perform the following procedure. Otherwise an accident involving serious vehicle damage and serious personal injury could occur.**
  **(1) Keep driving straight ahead while gradually reducing speed.**
  **(2) Slowly pull off the road to a safe place.**
  **(3) Check the pressure for all four tires and adjust the pressure according to the most appropriate one of three (normal, loading, or towing) COLD tire pressure values shown on the tire placard located on the door pillar on the driver's side.**

**Even when the vehicle is driven a very short distance, the tires get warm and their pressures increase accordingly. Be sure to let the tires cool thoroughly before adjusting their pressures to the standard values shown on the tire placard. Refer to "Tires and wheels" ☞11-25. The tire pressure monitoring system does not function when the vehicle is stationary. After adjusting the tire pressures, increase the vehicle speed to at least 40 km/h (25 mph) to start the TPMS rechecking of the tire inflation pressures. If the tire pressures are now above the severe low pressure threshold, the low tire pressure warning light should turn off a few minutes later.**

**If this light still illuminates while driving after adjusting the tire pressure, a tire may have significant damage and a fast leak that causes the tire to lose air rapidly. If you have a flat tire, replace it with a spare tire as soon as possible.**

- **When a spare tire is mounted or a wheel rim is replaced without the original pressure sensor/transmitter being transferred, the low tire pressure warning light will illuminate steadily after blinking for approximately one minute. This indicates the TPMS is unable to monitor all four road wheels. We recommend that you contact your SUBARU dealer as soon as possible for tire and sensor replacement and/or system resetting.**

- **When a tire is repaired with liquid sealant, the tire pressure warning valve and transmitter may not operate properly. If a liquid sealant is used, we recommend that you contact your nearest SUBARU dealer or other qualified service shop as soon as possible. Make sure to replace the tire pressure warning valve and transmitter when replacing the tire. You may reuse the wheel if there is no damage to it and if the sealant residue is properly cleaned off. If the light illuminates steadily after blinking for approximately one minute, we recommend that you promptly contact a SUBARU dealer to have the system inspected.**

**CAUTION**

**Do not place metal film or any metal parts in the cargo area. This may cause poor reception of the signals from the tire pressure sensors, and the tire pressure monitoring system will not function properly.**

## ■ TPMS screen (type B combination meter) (if equipped)

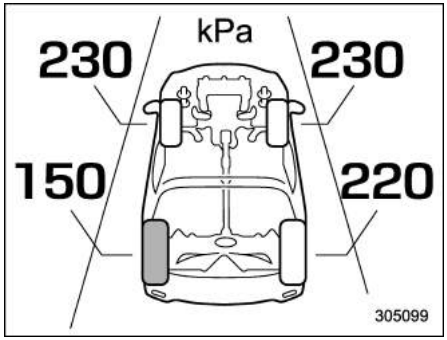


This screen displays each tire pressure. Refer to “Basic screens” ☞3-40.

## ■ TPMS mode setting

Before driving your vehicle, make sure that the TPMS mode is set to the most appropriate one based on the loading condition of the vehicle.

Set a mode under the following conditions.

- when the vehicle is stationary
- when the ignition switch is in the “ON” position

Depending on vehicle specifications, your vehicle may be equipped with 2 or 3 types of TPMS mode settings.

## NOTE

**When there are 2 tire placards (normal and loading) affixed on the driver’s side door pillar, do not use the P3 or TPMS3 settings. Refer to “Tires and wheels” ☞11-25.**

### ▼ Type A combination meter display

| | | |
|---|---|---|
| P1: | Normal mode | |
| P2: | Loading mode | |
| P3: | Towing mode | |

### ▼ Type B combination meter display

| | | |
|---|---|---|
| TPMS1: | Normal mode | |
| TPMS2: | Loading mode | |
| TPMS3: | Towing mode | |

– CONTINUED –

### ▼ TPMS mode selection

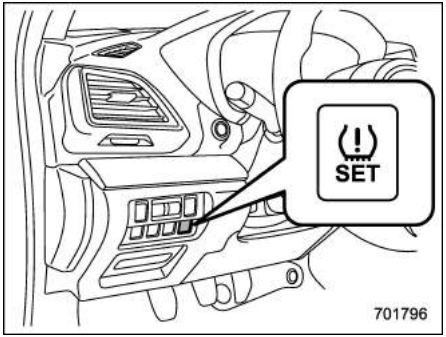


**LHD models**

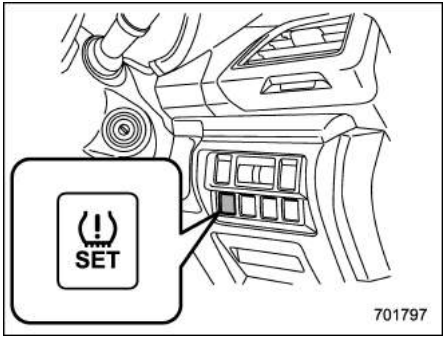


**RHD models**

1. When the trip meter is displayed in the combination meter, press and hold the TPMS set switch (for approximately 3 seconds). The current TPMS mode will be displayed in the trip meter display, and the TPMS mode can be changed.

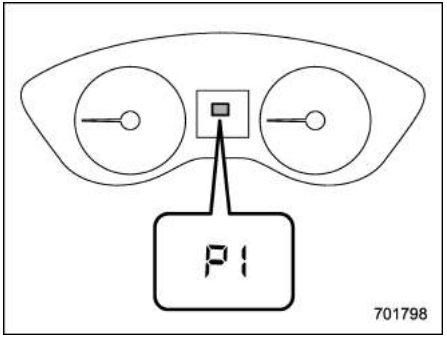


**Type A combination meter display**

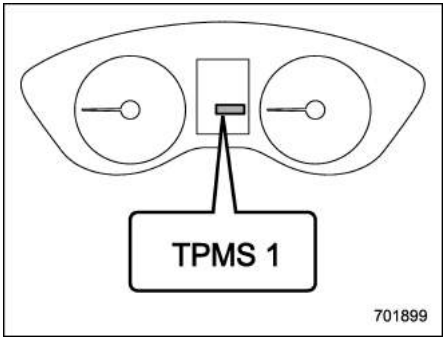


**Type B combination meter display**

2. Briefly press the TPMS set switch to change the mode. The mode will change in the following sequence.

Type A combination meter display:

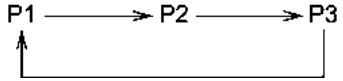


Type B combination meter display:

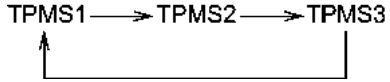


## NOTE

**When there are 2 tire placards (normal and loading) affixed on the driver's side door pillar, do not use the P3 or TPMS3 settings. Refer to "Tires and wheels" ☞11-25.**

3. When the desired mode is displayed, press and hold the switch (for approximately 3 seconds) to confirm the setting. Once the setting is complete, the confirmation message will be displayed.

Example

- Type A combination meter display: if you select P3, "set.3" will be displayed.
- Type B combination meter display: if you select TPMS 3, "TPMS 3 SET" will be displayed.

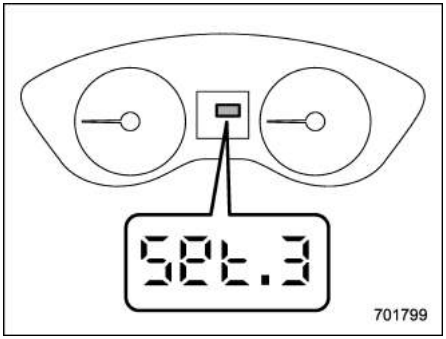


**Type A combination meter display**

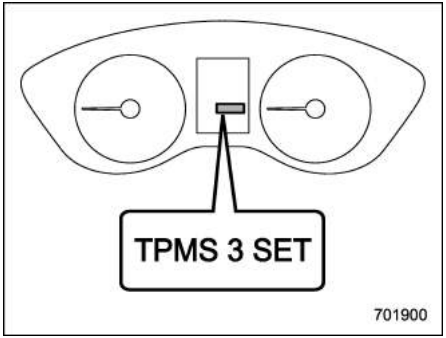


**Type B combination meter display**

After the TPMS mode is displayed, the trip meter will appear again.

## NOTE

**If no operations are performed while the TPMS mode selection is activated, the display will return to the trip meter after approximately 10 seconds.**

**Change the TPMS mode according to the specified pressure shown on the tire inflation pressure label.**

## Cruise control (if equipped)

Cruise control enables you to maintain a constant vehicle speed without holding your foot on the accelerator pedal and it is operative when the vehicle speed is 30km/h (20 mph) or more.

**⚠ WARNING**

- **Do not use the cruise control under any of the following conditions. These may cause loss of vehicle control.**
  - **driving up or down a steep grade**
  - **driving on slippery or winding roads**
  - **driving in heavy traffic**
  - **towing a trailer**
- **When using the cruise control, always set the speed appropriately according to the speed limit, traffic flow, road conditions, and other conditions.**

– CONTINUED –

## NOTE

**Make sure the cruise control system is turned off when the cruise control is not in use to avoid unintentionally setting of the cruise control.**

## ■ To set cruise control

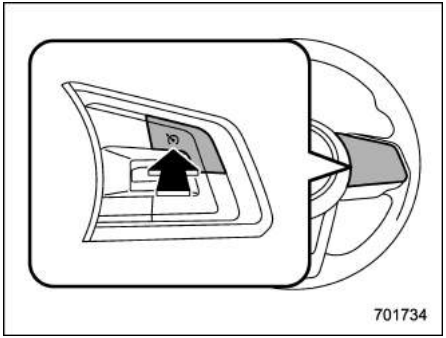


**Cruise control main button**

1. After the engine has started, press the cruise control main button.

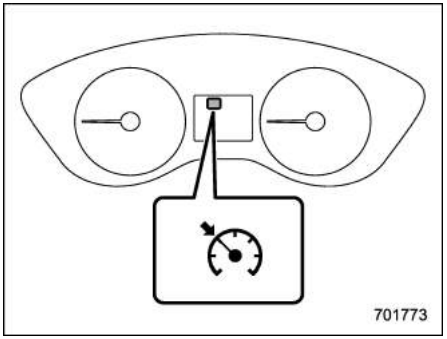


**Cruise control indicator light (type A)**

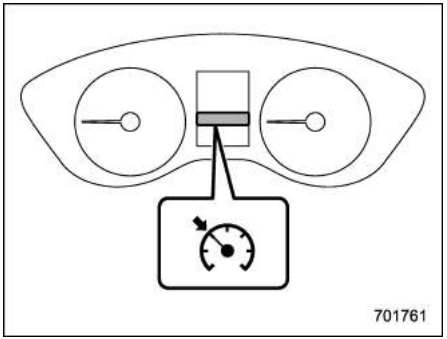


**Cruise control indicator light (type B)**

The cruise control indicator light on the combination meter will illuminate.

2. Depress the accelerator pedal until the vehicle reaches the desired speed.

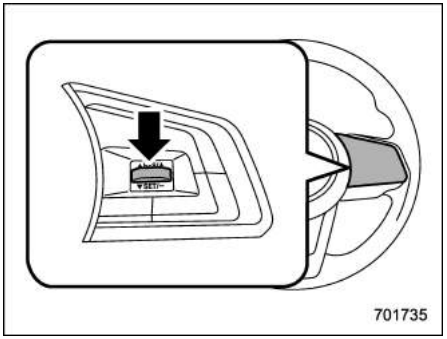


3. Press the “RES/SET” switch to the “SET” side and release it. Then release the accelerator pedal.

## NOTE

**When setting a cruise speed for the first time during a drive, both “SET” and “RES” may be used to set the initial cruise speed.**

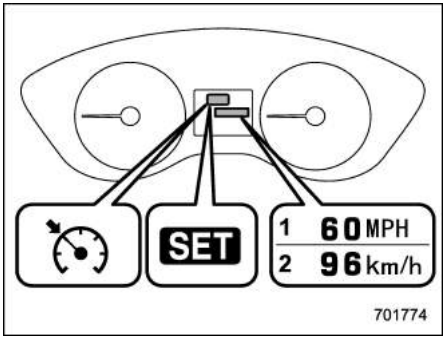


**Cruise control set indicator light (type A)**
1) When setting the displayed unit as “MPH”
2) When setting the displayed unit as “km/h”

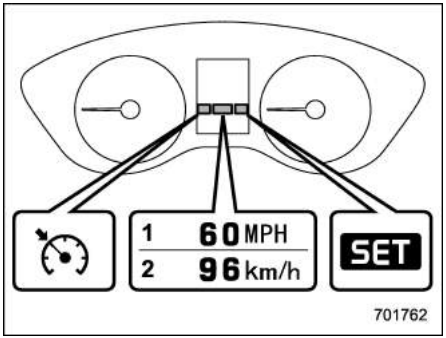


**Cruise control set indicator light (type B)**
1) When setting the displayed unit as “MPH”
2) When setting the displayed unit as “km/h”

At this time, the cruise control set indicator light is illuminated in the combination meter. The set speed will be shown on the combination meter. You can change the displayed units by operating the combination meter display.

- For type A meter details , refer to “Combination meter settings” ☞3-11.
- For type B meter details, refer to “Menu screens” ☞3-42.

The vehicle will maintain the desired speed.

Vehicle speed can be temporarily increased while driving with the cruise control activated. Simply depress the accelerator pedal to accelerate the vehicle. When the accelerator pedal is released, the vehicle will return to and maintain the previous cruising speed.

## ■ To temporarily cancel the cruise control

The cruise control can be temporarily canceled in the following ways.

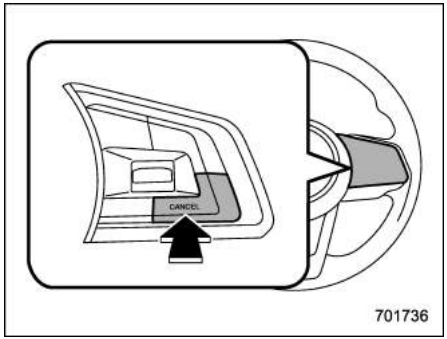


- Press the “CANCEL” button.
- Press the X-MODE switch to activate the X-MODE.
- Depress the brake pedal.

**⚠ WARNING**

**You can cancel the cruise control by shifting the select lever into the “N” position. However, do not shift the lever into the “N” position while driving except in case of emergency. If the select lever is shifted into the “N” position, the engine brake will no longer work. This could result in**

– CONTINUED –

**an accident.**

The cruise control set indicator light in the combination meter turns off when the cruise control is canceled.

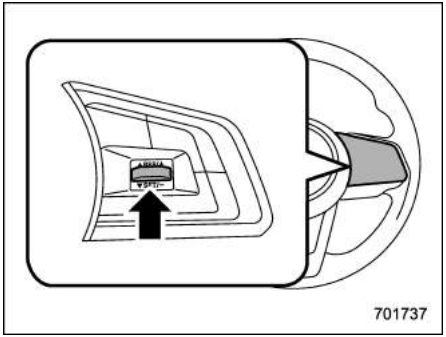


To resume the cruise control after it has been temporarily canceled and with vehicle speed of approximately 30 km/h (20 mph) or more, press the “RES/SET” switch to the “RES” side to return to the original cruising speed automatically.

The cruise control set indicator light in the combination meter will automatically illuminate at this time.

## ■ To turn off the cruise control

There are two ways to turn off the cruise control:

- Press the cruise control main button again.
- Turn the ignition switch to the “ACC” or “LOCK/OFF” position (but only when the vehicle is completely stopped).

## ■ To change the cruising speed

### ▼ To increase the speed (by the “RES/SET” switch)

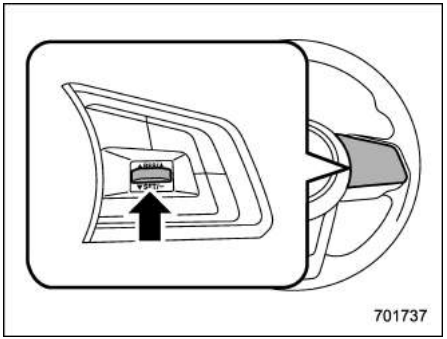


Press the “RES/SET” switch to the “RES” side and hold it until the vehicle reaches the desired speed. Then, release the switch. The vehicle speed at that moment will be memorized and treated as the new set speed.

**When setting the displayed unit as “MPH”:**

The set speed can be increased 1 mph (1.6 km/h) each time by pressing the “RES/SET” switch to the “RES” side.

**When setting the displayed unit as “km/h”:**

The set speed can be increased 1 km/h each time by pressing the “RES/SET” switch to the “RES” side.

### ▼ To increase the speed (by accelerator pedal)

1. Depress the accelerator pedal to accelerate the vehicle to the desired speed.
2. Press the “RES/SET” switch to the “SET” side once. Now the desired speed is set and the vehicle will keep running at that speed without depressing the accelerator pedal.

▼ **To decrease the speed (by the "RES/SET" switch)**

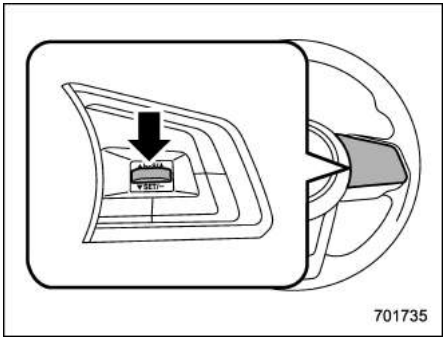


Press the "RES/SET" switch to the "SET" side and hold it until the vehicle reaches the desired speed. Then, release the switch. The vehicle speed at that moment will be memorized and treated as the new set speed.

**When setting the displayed unit as "MPH":**

The set speed can be decreased 1 mph (1.6 km/h) each time by pressing the "RES/SET" switch to the "SET" side.

**When setting the displayed unit as "km/h":**

The set speed can be decreased 1 km/h each time by pressing the "RES/SET" switch to the "SET" side.

▼ **To decrease the speed (by brake pedal)**

1. Depress the brake pedal to release cruise control temporarily.
2. When the speed decreases to the desired speed, press the "RES/SET" switch to the "SET" side once. Now the desired speed is set and the vehicle will keep running at that speed without depressing the accelerator pedal.

## ■ Cruise control indicator light

Refer to "Cruise control indicator light" ☞3-34.

## ■ Cruise control set indicator light

Refer to "Cruise control set indicator light" ☞3-35.

# Auto Start Stop system (if equipped)

The Auto Start Stop system is designed to automatically stop and restart the engine when the vehicle is stationary for a short period of time (while waiting for a traffic light or in a traffic jam, etc.) after the engine has warmed up. The system operates in order to reduce fuel consumption and exhaust emissions, as well as undesired idling noise.

## ■ System operation

**⚠ CAUTION**

- **The Auto Start Stop system is designed to automatically stop and restart the engine for a short period of time during idling. Do not use the system when parking the vehicle normally.**
- **The Auto Start Stop system does not operate when a trailer hitch connector is connected. If the Auto Start Stop system operates when a trailer hitch connector is connected, we recommend that you consult your SUBARU dealer. Continuing to drive the vehicle while using the system in this**

– CONTINUED –

**condition could result in lurching down downhill slopes or rolling back on uphill slopes, or could cause damage to the transmission.**

So that it can be used safely and comfortably, in addition to driver operations, the Auto Start Stop system is designed to constantly monitor the vehicle conditions as well as the environment inside and outside the vehicle, in order to control stopping and restarting of the engine.

After the vehicle has been completely stopped by depressing the brake pedal with the select lever in the “D” position, the engine will be automatically stopped.

If you release the brake pedal with the select lever kept in the “D” position, the engine will be automatically restarted.

However, if the Auto Vehicle Hold operation indicator light illuminates, the engine will not be restarted.

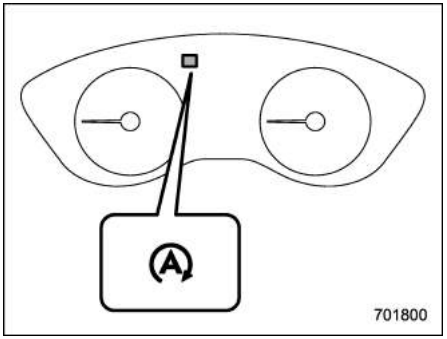


**Auto Start Stop indicator light (green) (type A)**

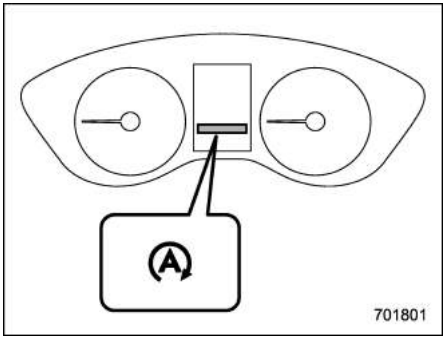


**Auto Start Stop indicator light (green) (type B)**

If the engine is temporarily stopped by the system, the Auto Start Stop indicator light on the combination meter will illuminate in green. This indicator light will turn off when the system restarts the engine.

## NOTE

- **After starting the engine, if the vehicle is left idling without being driven, the Auto Start Stop system will not operate.**
- **Your vehicle is equipped with a special high-performance battery. When replacing the vehicle battery, be sure to replace it with a genuine SUBARU battery (or equivalent) designed specifically for use in a vehicle**

**equipped with the Auto Start Stop system. For details, we recommend that you consult your SUBARU dealer.**

### ▼ Operational conditions

The engine can be automatically stopped by the Auto Start Stop system when all of the following conditions are met.

- the engine is sufficiently warmed up
- the engine hood is closed
- the driver's door is closed
- the driver's seatbelt is fastened
- the malfunction indicator light (Check Engine light) is off
- the air inlet selection is set to a mode other than "" mode
- the rear window defogger is not in use
- the vehicle is not be used for towing
- the X-MODE has been turned off (if equipped)

After the vehicle is stopped, the engine will be automatically stopped when the following conditions are met.

- the steering wheel is in the straight ahead position
- the steering wheel is not being operated

## NOTE

- **After the vehicle is stopped, the engine may not automatically stop under the following conditions.**
  - **– the vehicle is stopped on a road with a steep slope**
  - **– the vehicle is stopped by hard braking**
  - **– negative pressure in the brake booster is not sufficient**
- **After the vehicle is stopped, the engine may not automatically stop if the brake pedal is not fully depressed. Make sure to depress the brake pedal firmly when stopping the vehicle.**
- **In the following cases, it may take some time for the Auto Start Stop system to operate.**
  - **– when the battery is discharged because the vehicle has not been used for a long period of time, etc.**
  - **– the coolant temperature is low**
  - **– when the battery terminals have been reconnected after replacing the battery, etc.**

### ▼ Non-operational conditions

In any of the following cases, the Auto Start Stop system will not operate.

- When the Auto Start Stop warning light/ Auto Start Stop OFF light (yellow) is illuminating or flashing
- When the malfunction indicator light (Check Engine light) is illuminating
- the electronic parking brake is applied
- When the engine hood is opened
- When the vehicle is at an altitude of more than approximately 1,500 m (4,900 ft)
- When the outside temperature is lower than approximately −10°C (14°F)
- When the CVT fluid is not sufficiently warmed up
- When the temperature of the CVT fluid is abnormally high
- When the vehicle battery is not in good condition
- When using the climate control system, the temperature difference between the setting temperature and the temperature inside the vehicle is significant
- When using the climate control system, the amount of air flow is significant

## NOTE

**The Auto Start Stop system may not operate if the malfunction indicator light (Check Engine light) or other warning lights on the combination meter are illuminating or flashing.**

– CONTINUED –

### ▼ Engine restart operational conditions

In any one of the following cases, the engine will be automatically restarted even if the brake pedal is kept depressed.

- When slightly releasing the brake pedal on road with a steep slope and the vehicle begins rolling
- When further depressing the brake pedal
- When depressing the accelerator pedal
- When you move the select lever to the "R" position
- When turning the steering wheel
- When operating the electronic parking brake switch
- When the air inlet selection set to "" mode
- When the climate control system can no longer maintain the set temperature
- When unbuckling the driver's seatbelt
- When opening the driver's door
- When turning on the X-MODE
- When activating the rear window defogger
- When the control of Auto Vehicle Hold function turns off, refer to "Auto Vehicle Hold function" ☞7-33.

### ▼ Engine restart non-operational conditions

To ensure safety, the engine will not be automatically restarted if you open the engine hood when the Auto Start Stop system is in operation, even if you release the brake pedal. In this case, check the surrounding area and restart the engine by normal operation.

Also, when the Auto Vehicle Hold operation indicator light is illuminated, the engine will not restart.

## NOTE

- **When the Auto Start Stop system is in operation, the brake pedal may feel stiff. However, this is not a malfunction.**
- **In the following conditions, the engine will be automatically restarted even if you keep the brake pedal depressed.**
  - **When the battery is discharged**
  - **When the negative pressure in the brake booster has lowered**
- **In the following cases, the length of time that the engine is temporarily stopped by the Auto Start Stop system may be shorter.**
  - **When the climate control system is in operation**
  - **When the outside temperature is high, or when it is low (because the climate control system can no longer maintain the set temperature)**
  - **When consumption of electricity by electrical components is high**
- **When the engine is automatically restarted by the Auto Start Stop system, the power provided via the accessory power outlet will be reduced. Depending on the connected appliance, the power of the appliance may temporarily turn off.**

### ▼ Auto Start Stop warning light

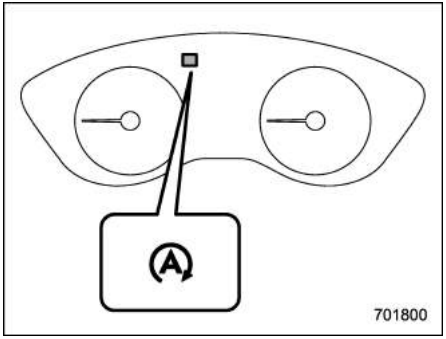


**Auto Start Stop warning light (yellow) (type A)**

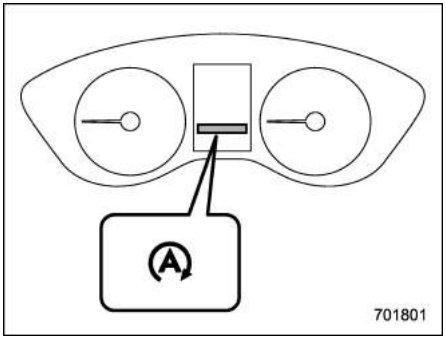


**Auto Start Stop warning light (yellow) (type B)**

The Auto Start Stop warning light will illuminate in yellow when initially turning the push-button ignition switch to the “ON” position. The light will turn off after the engine has started.

The Auto Start Stop warning light will flash when the Auto Start Stop system is malfunctioning. We recommend that you contact your authorized SUBARU dealer for an inspection.

**⚠ CAUTION**

**If the Auto Start Stop warning light does not turn off after the engine has started, the Auto Start Stop system may be malfunctioning. We recommend that you contact your authorized SUBARU dealer for an inspection.**

### ▼ Auto Start Stop OFF switch

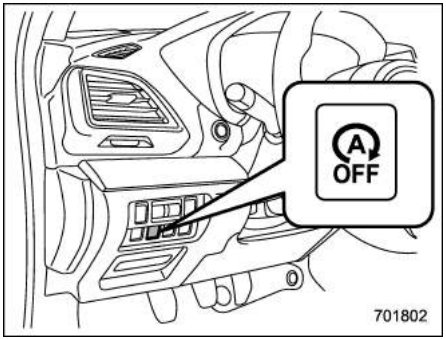


**LHD models**

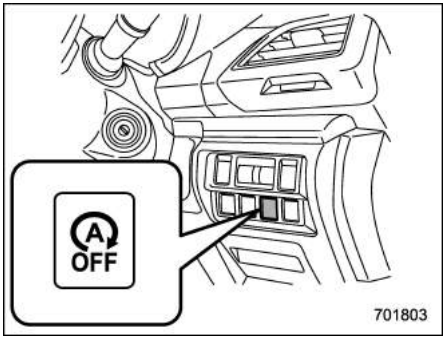


**RHD models**

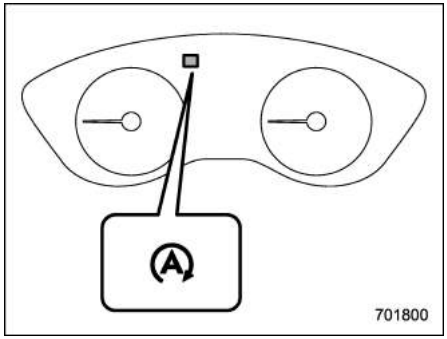


**Auto Start Stop OFF indicator light (yellow) (type A)**

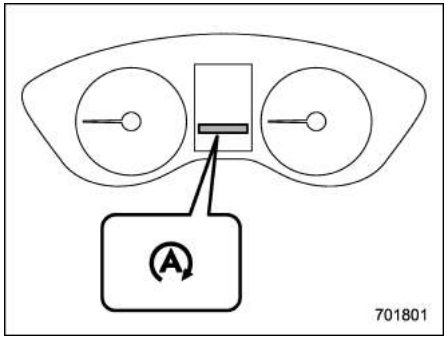


**Auto Start Stop OFF indicator light (yellow) (type B)**

If the Auto Start Stop OFF switch is pressed, operation of the Auto Start Stop

– CONTINUED –

system will be disabled. The Auto Start Stop OFF indicator light on the combination meter will then illuminate in yellow. If the switch is pressed once more, the Auto Start Stop system will turn on again. The Auto Start Stop OFF indicator light will then turn off.

While the engine is temporarily stopped by the system, if the Auto Start Stop OFF switch is pressed, the engine will be restarted even if you do not release the brake pedal.

## NOTE

- **If the engine is restarted when the Auto Start Stop system is not operational and the ignition switch has been turned to the "LOCK"/"OFF" position, the Auto Start Stop system will turn on again.**
- **Be sure to turn the ignition switch to the "LOCK"/"OFF" position when leaving the vehicle. Failure to do so could result in the battery discharging.**

▼ **Auto Start Stop No Activity Detected indicator light**

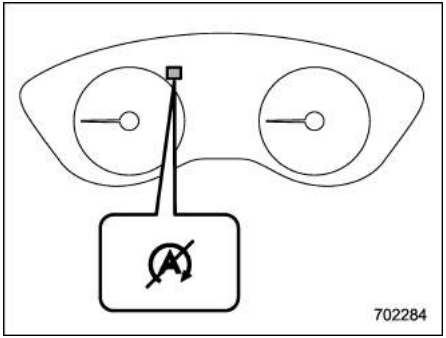


**Auto Start Stop No Activity Detected indicator light (Type A)**

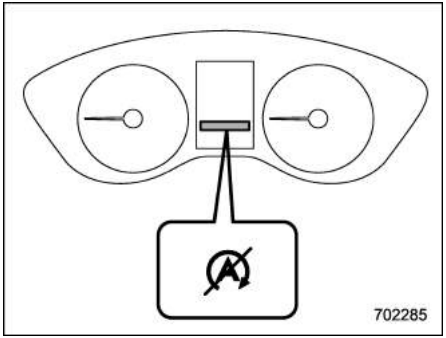


**Auto Start Stop No Activity Detected indicator light (Type B)**

If the operational conditions are not met when the vehicle is stopped, the engine does not stop and the Auto Start Stop No Activity Detected indicator light will illuminate. It will turn off when the vehicle begins to drive.

## ■ Displaying the Auto Start Stop system status

Approximate indications of the time that the engine has been stopped by the Auto Start Stop system and/or the amount of fuel saved can be displayed on the multi-function display (black and white) or combination meter display (color LCD). For details, refer to "Auto Start Stop time" ☞3-48 or "Basic screens" ☞3-40.

## ■ System warning

So that it can be used safely and comfortably, the Auto Start Stop system is designed to constantly monitor the vehicle conditions as well as the environment inside and outside the vehicle in addition to driver operations, and to provide various warnings to the driver via the warning light and/or indicator light illuminating or flashing and a buzzer sounding. For details about the warning light and indicator light, refer to "Auto Start Stop warning light/Auto Start Stop OFF indicator light (yellow)" ☞3-35 and "Auto Start Stop indicator light

(green)” ☞3-36.

▼ **Warning buzzer**

The buzzer will sound when the engine hood is opened while the engine is stopped by the Auto Start Stop system.

When this occurs, the buzzer will stop sounding when the following operations are performed.

- the engine is restarted by normal operation (refer to “Preparing to drive” ☞7-6)
- the ignition switch is turned to the “LOCK”/“OFF” position

▼ **Display of warning messages (models with combination meter display (color LCD))**

If a warning message is displayed on the combination meter display (color LCD) while the vehicle is being driven, a malfunction may have occurred in the Auto Start Stop system. In this case, the Auto Start Stop warning light will illuminate or flash in yellow. We recommend that you have your vehicle inspected at a SUBARU dealer as soon as possible.

## Subaru Rear Vehicle Detection (SRVD) (if equipped)

The Subaru Rear Vehicle Detection (SRVD) consists of rear radar with Blind Spot Detection, Lane Change Assist, and Rear Cross Traffic Alert.

These functions enable the system to detect objects or vehicles to the rear, and alert the driver’s attention when changing lanes or when driving in reverse.

**⚠ WARNING**

**The driver is responsible for driving safely. Always be sure to check the surroundings with your eyes when changing lanes or reversing the vehicle.**

**The system is designed to assist the driver by monitoring the rear and side areas of the vehicle during a lane change or reversing. However, you cannot rely on this system alone in assuring the safety during a lane change or reversing. Overconfidence in this system could result in an accident and lead to serious injury or death. Since the system operation has various limitations, the flashing or illumination of the SRVD approach indicator light may be delayed or it may not operate at all even when a vehicle is present in a neighboring lane or approaching from either side.**

**The driver is responsible for paying attention to the rear and side areas of the vehicle.**

### ■ System features

**NOTE**

**The SRVD radar sensor is approved under the radio wave related laws of each country. For details, refer to “Technical information” ☞13-58.**

SRVD consists of the following functions:

- to detect a vehicle in a blind spot in an adjacent lane or a vehicle approaching at high speed while driving the vehicle (Blind Spot Detection and Lane Change Assist)
- to detect a vehicle approaching from right or left while reversing the vehicle (Rear Cross Traffic Alert)

The system uses radar sensors for the following features.

– CONTINUED –

## ▼ Blind Spot Detection (BSD)

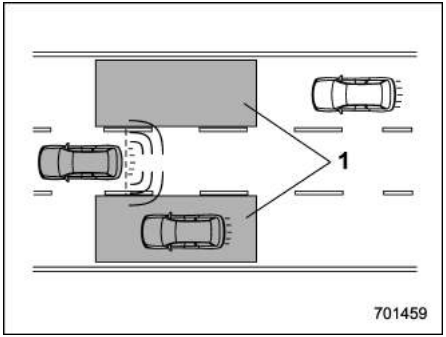


1) Operating range

The system notifies the driver of vehicles existing in the blind area.

- If the system detects a vehicle existing in the blind area, it warns the driver of dangers by illuminating the SRVD approach indicator light(s) on the outside mirror(s).

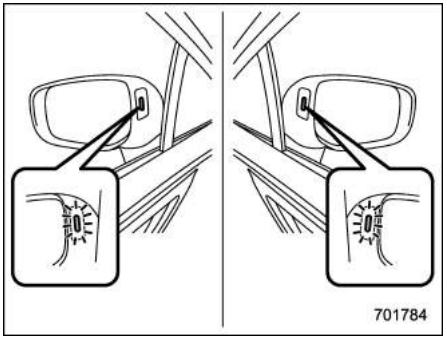


**SRVD approach indicator light**

- If the driver operates the turn signal lever in the direction where the SRVD approach indicator light is illuminating, the system warns the driver of dangers by flashing the SRVD approach indicator light.

## ▼ Lane Change Assist (LCA)

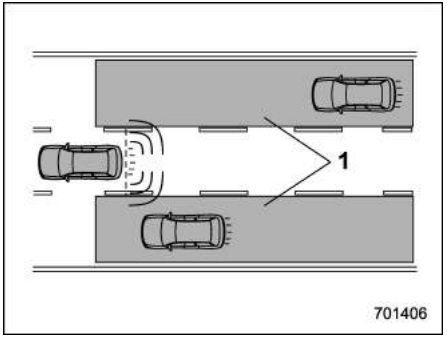


1) Operating range

The system notifies the driver of vehicles approaching at a high speed in the neighboring lanes.

- If the system detects vehicles approaching at a high speed in the neighboring lanes, it warns the driver of dangers by illuminating the SRVD approach indicator light(s) on the outside mirror(s).
- If the driver operates the turn signal lever in the direction where the SRVD approach indicator light is illuminating, the system warns the driver of dangers by flashing the SRVD approach indicator light.

## ▼ Rear Cross Traffic Alert (RCTA)

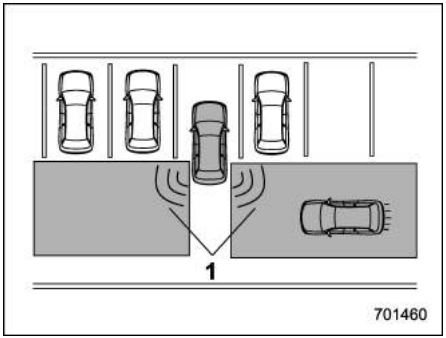


1) Operating range

The system notifies the driver of another vehicle approaching from either side when driving in reverse. This feature helps the driver check the rear and side areas of the vehicle when moving backward.

If the system detects a vehicle approaching from either side while moving backward, it warns the driver of dangers in the following way.

- The SRVD approach indicator light(s) on the outside mirror(s) flashes.
- A warning buzzer sounds.
- An icon appears on the rear view camera screen (audio/navigation monitor).

### ▽ Limitations of the detectability of RCTA

Since the detectability of RCTA is limited, the RCTA may not operate properly in parking areas in which the parking lanes are drawn diagonally to the driving lanes.

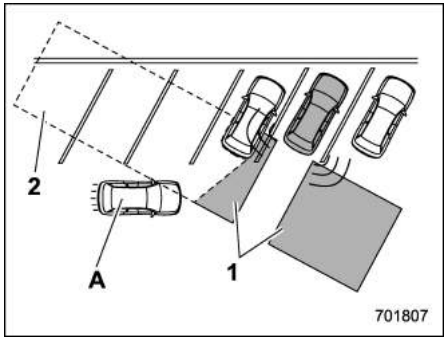


**Example 1**

1) The detection range of the radar sensors
2) Area out of detection range of the radar sensors

A) Vehicle that may not be detected

**⚠ WARNING**

**The approaching vehicle (A) may not be detected because the vehicle reversing is blocked by a parked vehicle. Always be sure to check the surroundings with your eyes when reversing the vehicle.**

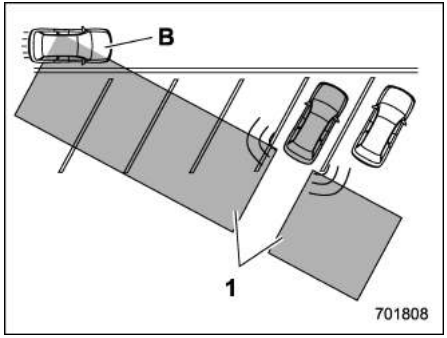


**Example 2**

1) The detection range of the radar sensors

B) Vehicle that may be detected

## NOTE

**The system may detect a vehicle (B) that is coming across the front of your vehicle. Always be sure to check the surroundings with your eyes when reversing the vehicle.**

– CONTINUED –

## ■ System operation

### ▼ Operating conditions

The SRVD will operate when all of the following conditions are met.

- The ignition switch is in the “ON” position.
- The SRVD warning indicator and SRVD OFF indicator are turned off.
- The vehicle is driven at speeds above 12 km/h (7 mph) (except when reversing).
- The select lever is in the “R” position (RCTA only).

The SRVD will not operate in the following situations.

- The SRVD OFF indicator appears.
- The vehicle speed is below 10 km/h (6 mph) even when the SRVD OFF indicator remains off (except when reversing).

## NOTE

- **When a malfunction occurs in the system (including the SRVD approach indicator light), the SRVD will stop operating and the SRVD warning indicator will appear. If the SRVD warning indicator appears, we recommend that you have your vehicle inspected at a SUBARU dealer as soon as possible.**
- **In the following cases, the SRVD will temporarily stop operating (or may stop operating) and the SRVD OFF indicator will appear. The SRVD will resume operation once these conditions are corrected, and the SRVD OFF indicator will disappear. However, if the SRVD OFF indicator has appeared for a prolonged time, we recommend that you have the system inspected at a SUBARU dealer as soon as possible.**
  - **When a large amount of snow or ice sticks to the rear bumper surface around the radar sensors**
  - **When the vehicle is driven on a snow-covered road or in an environment in which there are no objects around (such as desert) for a long time**
  - **When the temperature around the radar sensors increased excessively due to long driving on uphill grades in summer, etc.**
  - **When the temperature around the radar sensors becomes extremely low**
  - **When the vehicle battery voltage lowers**
  - **When the vehicle battery becomes overvoltage**
  - **When the radar sensor becomes significantly misaligned (If the orientation of the radar sensor is shifted for any reason, readjustment is required. We recommend that you have the sensor adjusted at a SUBARU dealer.)**
- **The detectability of the radar sensors is restricted. The SRVD detection may be impaired and the system may not operate properly under the following conditions.**
  - **When the rear bumper around the radar sensors is distorted**
  - **When ice, snow or mud adheres to the rear bumper surface around the radar sensors**
  - **When stickers, etc. are affixed on the areas of the radar sensors on the rear bumper**
  - **During adverse weather conditions such as rain, snow or fog**
  - **When driving on wet roads such as snow-covered roads and through puddles**
- **The radar sensors may not detect or may have difficulty detecting the following vehicles and objects.**
  - **Small motorcycles, bicycles, pedestrians, stationary objects on the road or road side, etc.**
  - **Vehicles with body shapes that the radar may not reflect (vehicles with lower body height such as a trailer with no cargo and sports cars)**

**– Vehicles that are not approaching your vehicle even though they are in the detection area (either on a neighboring lane to the rear or beside your vehicle when reversing) (The system determines the presence of approaching vehicles based on data detected by the radar sensors.)**

**– Vehicles traveling at significantly different speeds**

**– Vehicles driving in parallel at almost the same speed as your vehicle for a prolonged time**

**– Oncoming vehicles**

**– Vehicles in a lane beyond the neighboring lane**

**– Vehicles travelling at a significantly lower speed that you are trying to overtake**

**• On a road with extremely narrow lanes, the system may detect vehicles driving in a lane next to the neighboring lane.**

**• When the 8-inch audio/navigation system is performing a software update, the RCTA warning icons may not be displayed on the audio/navigation screen until the update is complete.**

## ■ SRVD approach indicator light/warning buzzer

While the SRVD is active, the following item(s) will operate to alert the driver.

• The SRVD approach indicator light (when there are vehicles in the neighboring lanes)

• The SRVD approach indicator light and warning buzzer (when a vehicle is approaching from the left or right side while reversing)

### ▼ SRVD approach indicator light

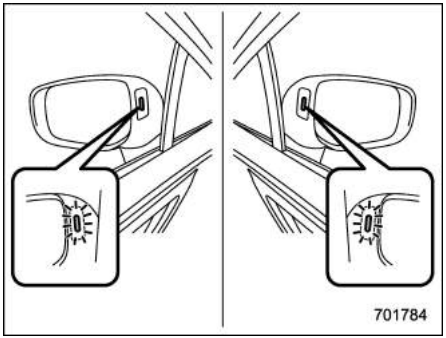


**SRVD approach indicator light**

It is mounted in each side of the outside mirrors and will illuminate when a vehicle approaching from behind is detected. If an indicator light illuminates and the turn signal lever is operated toward the side in which this light turned on, the indicator light flashes to warn the driver of dangers. When reversing the vehicle, the indicator light flashes when the system detects a vehicle approaching from either side.

#### ▽ SRVD approach indicator light dimming function

When the headlights are turned on, the brightness of the SRVD approach indicator light will be reduced.

## NOTE

**• When affected by direct sunlight, you may have difficulty recognizing the SRVD approach indicator light.**

**• When affected by the headlight beams from the vehicles behind, you may have difficulty recognizing the SRVD approach indicator light.**

**• While the illumination brightness control dial is in the fully upward position, even if the headlights are turned on, the brightness of the SRVD approach indicator light will not be reduced. For details about the illumination brightness control dial, refer to "Illumination brightness control" ☞3-12.**

– CONTINUED –

### ▼ SRVD approach warning buzzer (only when reversing)

A warning buzzer sounds along with flashing of the SRVD approach indicator light to warn the driver of dangers.

The setting of the warning buzzer volume can be changed by operating the combination meter display (color LCD). For details, refer to “Menu screens” ☞3-42.

### ▼ Safety tips regarding the SRVD approach indicator light/warning buzzer

- In the following cases, operation of the SRVD approach indicator light and the warning buzzer may be delayed or the system may fail to issue these warnings.
  - – When a vehicle moves to the neighboring lane from a lane next to the neighboring lane
  - – When driving on a steep incline or on repeated sharp uphill and downhill grades
  - – When going beyond a pass
  - – When both your vehicle and a vehicle driving on a neighboring lane are driving on the far side of each lane.
  - – When several narrowly-spaced vehicles are approaching in a row
  - – In low radius bends (tight bends or when making turns at an intersection)
  - – When there is a difference in height between your lane and the neighboring lane
  - – Immediately after the SRVD is activated by pressing the SRVD OFF switch
  - – Immediately after the select lever is shifted to the “R” position
  - – When extremely heavy cargo is loaded in the cargo area
- During reversing, operation of the SRVD approach indicator light and the warning buzzer may be delayed or the system may fail to issue these warnings under the following conditions.
  - – When backing out of an angled parking space
  - – When a large-sized vehicle is parked next to your vehicle (That vehicle prevents the propagation of radar waves.)
  - – When reversing on sloped roads
  - – When reversing at a high speed

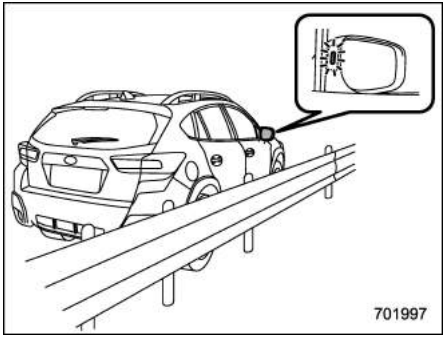


- The SRVD approach indicator light may illuminate when driving close to solid objects on the road or road side (such as guardrails, tunnels and sidewalls).
- When turning at an intersection in urban areas, the SRVD approach indicator light may flash.
- If a building or a wall exists in the reversing direction, the SRVD approach indicator light may flash and the warning buzzer may sound.
- In the following cases, the system may detect a vehicle driving two lanes away from your vehicle.
  - – When your vehicle drives on the near side of its lane from the corresponding vehicle
  - – When the vehicle driving two lanes away drives on the near side of its lane

from your vehicle

## ■ SRVD OFF indicator

### ▼ System temporary stops

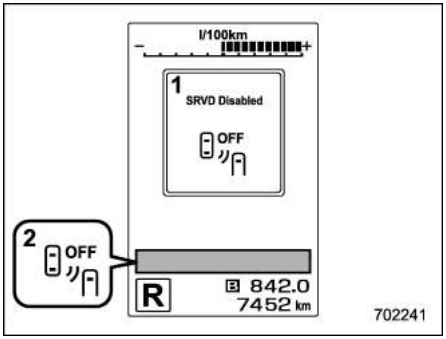


1) SRVD temporary stop message
2) SRVD OFF indicator

This display appears when the system is used under the following conditions.

- Extremely high or low temperatures
- When abnormal voltage exists for the vehicle battery
- When the radar sensor is significantly misaligned

Once these conditions are corrected, the system will recover from the temporary stop condition and the indicator will disappear. If the indicator remains displayed for a prolonged time, we recommend that you have the system inspected at a SUBARU dealer.

### ▼ System temporary stops due to reduced radar sensitivity

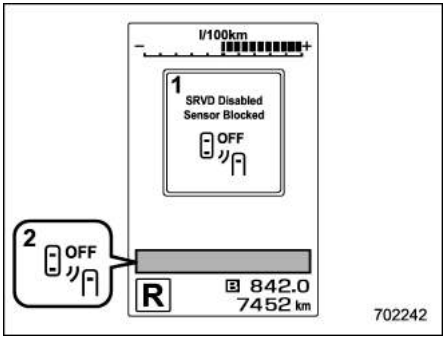


1) SRVD temporary stop message due to reduced radar sensitivity
2) SRVD OFF indicator

This display appears when the detectability of the radar sensors is reduced. Once the condition is corrected, the system will recover from the temporary stop condition and the indicator will disappear. If the indicator remains displayed for a prolonged time, we recommend that you have the system inspected at a SUBARU dealer.

## ■ SRVD warning indicator

### ▼ System malfunction

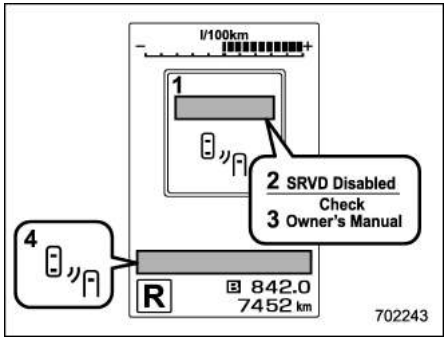


1) SRVD malfunction message
2) At first, this message will appear
3) Then this message will appear
4) SRVD warning indicator

This display appears when a malfunction occurs in the system. We recommend that you contact a SUBARU dealer and have the system inspected.

– CONTINUED –

## ■ SRVD OFF switch

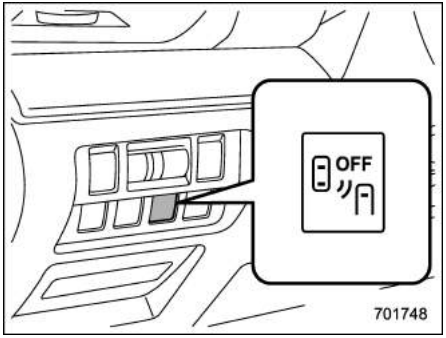


**SRVD OFF switch (left-hand drive models)**

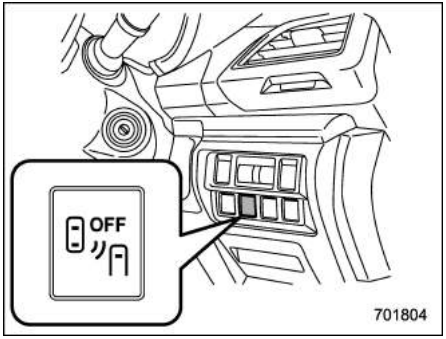


**SRVD OFF switch (right-hand drive models)**

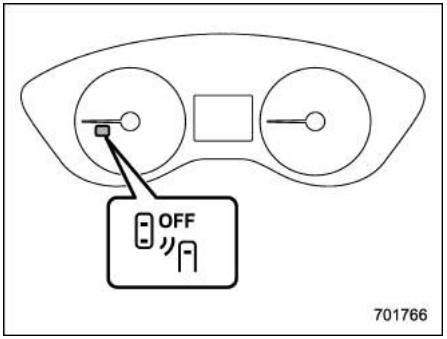


**SRVD OFF indicator (type A)**

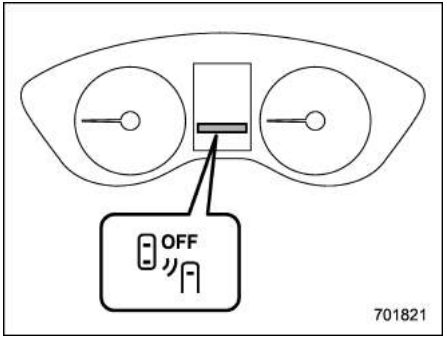


**SRVD OFF indicator (type B)**

If the SRVD OFF switch is pressed, the SRVD OFF indicator appears on the combination meter, and the SRVD is deactivated.

Press the switch again to activate the SRVD. The SRVD OFF indicator disappears.

When this occurs, the SRVD approach indicator light on the side of the rearview mirror illuminates for a few seconds and then turns off.

## NOTE

- **In the following cases, press the SRVD OFF switch to deactivate the system. The system may not operate properly due to blocked radar waves.**
  - **When towing a trailer**
  - **When a bicycle carrier or other item is fitted to the rear of the vehicle**
  - **When using a chassis dynamometer or free roller device, etc.**
  - **When running the engine and making the wheels rotate while lifting up the vehicle**
- **If the ignition switch is turned to the "LOCK"/"OFF" position, the last known status of the system is maintained. For example, if the ignition switch is turned to the "LOCK"/"OFF" position with the SRVD deactivated, the SRVD remains deactivated the next time the ignition switch is turned to the "ON" position.**

## ■ Handling of radar sensors

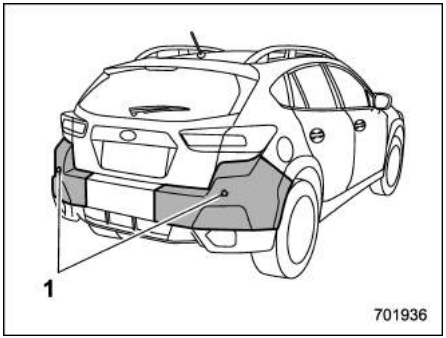


1) Radar sensors

The radar sensors, one on each side of the vehicle, are mounted inside the rear bumper.

### NOTE

- **To ensure correct operation of the SRVD, observe the following precautions.**
  - **– Always keep the bumper surface near the radar sensors clean.**
  - **– Do not affix any stickers or other items on the bumper surface near the radar sensors.**
  - **– Do not modify the bumper near the radar sensors.**
  - **– Do not paint the bumper near the radar sensors.**
  - **– Do not expose the bumper near the radar sensors to strong impacts. If a sensor becomes misaligned, a system malfunction may occur, including the inability to detect vehicles entering the detection areas. If any strong shock is applied to the bumper, we recommend that you contact your SUBARU dealer for inspection.**
  - **– Do not disassemble the radar sensors.**
- **If the radar sensors require repair or replacement, or the bumper area around the radar sensors requires repair, paintwork or replacement, we recommend that you contact your SUBARU dealer for assistance.**

## Reverse Automatic Braking System (if equipped)

Reverse Automatic Braking is a system designed to help avoid collisions or reduce collision damage when reversing the vehicle. If a wall or an obstacle is detected in the reversing direction, the system will notify the driver with a warning sound and may activate the vehicle's brakes automatically.

### ⚠ WARNING

- **Reverse Automatic Braking is not a system intended to replace the driver's responsibility to check surrounding areas for vehicles or obstacles to avoid a collision.**
- **The driver is responsible for driving safely. Before reversing, be sure to first depress the brake pedal and visually check the surroundings.**
- **There are some cases in which the vehicle cannot avoid collision, because the system operation has limitations. The warning sound or automatic braking may be delayed or may not operate at all even when an obstacle is present.**

– CONTINUED –

- **The system is not designed to detect people (including children), animals or other moving objects.**
- **Depending on the vehicle condition or the surrounding environment, the sonar sensor's ability to detect objects may be compromised.**

## NOTE

**The Reverse Automatic Braking System records and stores the following data when automatic braking operates. It does not record conversations, personal information or other audio data.**

- **Distance from the object**
- **Vehicle speed**
- **Accelerator pedal operation status**
- **Brake pedal operation status**
- **Select lever position**
- **Outside temperature**
- **The sensitivity setting of the sonar sensors**

**SUBARU and third parties contracted by SUBARU may acquire and use the recorded data for the purpose of vehicle research and development. SUBARU and third parties contracted by SUBARU will not disclose or provide the acquired data to any other third party except under the following conditions.**

- **The vehicle owner has given his/her consent.**
- **The disclosure/provision is based on a court order or other legally enforceable request.**
- **Data that has been modified so that the user and vehicle cannot be identified is provided to a research institution for statistical processing or similar purposes.**

## ■ Reverse Automatic Braking System overview

The system detects objects using sonar sensors installed in the rear bumper.

- If the system determines a possible collision with an object in the reversing direction, automatic deceleration will be activated. Also, beeping sounds will activate.
- If the vehicle is further reversed, automatic hard braking will be applied and a continuous beeping sound will activate.

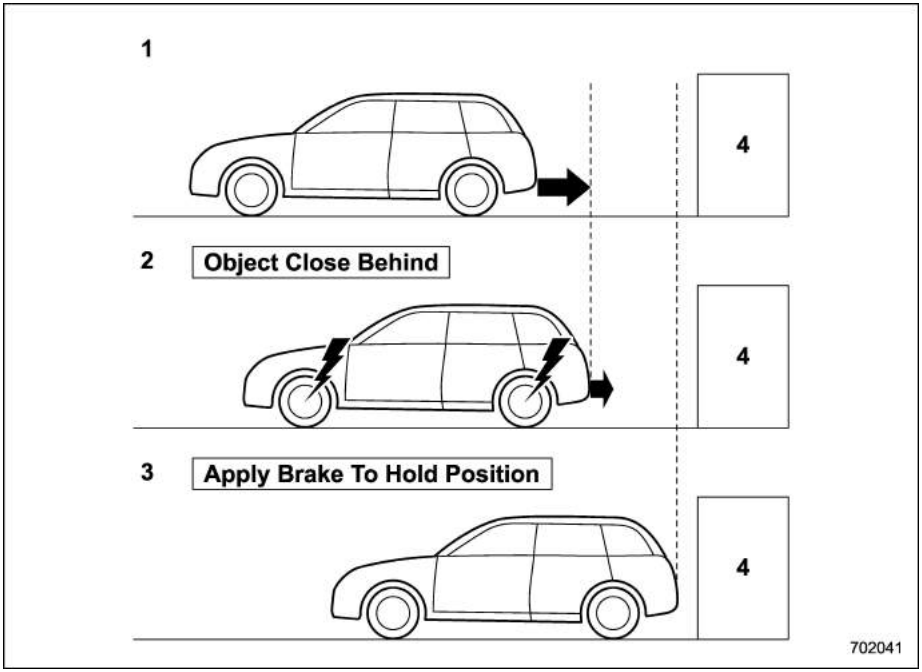


1) When reversing
2) When either strong automatic braking or torque control is applied to prevent collision (in this case, short warning beeps or continuous warning beeps will sound)
3) When the vehicle is stopped by the system (in this case, the continuous beep will remain sounding)
4) Object (e.g., a wall)

### ▼ Detecting range

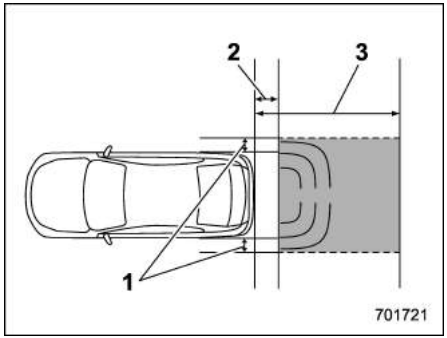


1) Detecting range (width): Approximately 15 cm (6 in) outside of the vehicle width
2) Range that the system cannot detect: Approximately 50 cm (20 in) behind the rear of the vehicle
3) Detecting range (length): Approximately 1.5 m (5 ft) from the rear of the vehicle

**⚠ WARNING**

**If your vehicle is trapped on a railroad crossing and you are trying to escape by reversing through the crossing gate, the system may recognize the crossing gate as an obstacle and the brake may activate. In this case, remain calm and either continue to depress the accelerator pedal or cancel the system. To**

– CONTINUED –

**cancel the system, refer to "Cancel-ing the Reverse Automatic Braking system operation" ☞7-69.**

## ■ Operating conditions

The Reverse Automatic Braking system will operate when all of the following conditions are met.

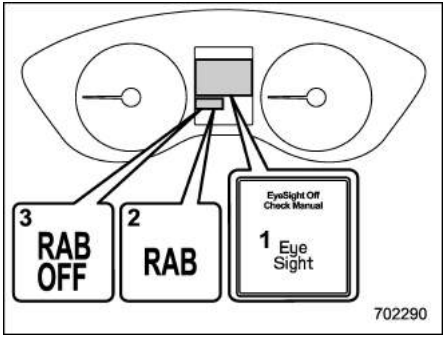


1) EyeSight warning indicator
2) RAB warning indicator
3) RAB OFF indicator

- The ignition switch is in the "ON" position
- The EyeSight warning indicator is off
- The Reverse Automatic Braking fail indicator is off
- HALT (Reverse Automatic Braking system OFF) indicator is off
- The Reverse Automatic Braking system is set to on
- The select lever is in the "R" position
- The vehicle speed is between 1.5 to 15 km/h (1 to 9 mph)

## NOTE

- **In the following cases, the Reverse Automatic braking system will not operate. We recommend that you promptly contact a SUBARU dealer to have the system inspected.**
  - **– The EyeSight warning indicator is illuminated**
  - **– The Reverse Automatic Braking fail indicator is illuminated**
- **When the Reverse Automatic Braking system OFF indicator is illuminated, the Reverse Automatic braking system cannot be operated.**
- **In the following cases, the system may not be able to properly detect an obstacle. We recommend that you promptly contact a SUBARU dealer to have the system inspected.**
  - **– A sticker, paint, or a chemical is applied to the sonar sensors or the rear bumper near the sonar sensor**
  - **– The rear bumper is modified**
  - **– The rear bumper has been removed and reattached**
  - **– The ground clearance is changed due to the vehicle's loading condition or modification**
  - **– Ice, snow or mud is adhered to the sonar sensors or the rear bumper near the sonar sensor**
  - **– The rear bumper is exposed to strong impact, or the rear bumper is deformed**
- **When the 8-inch audio/navigation system is performing a software update, the Reverse Automatic Braking System may not display the following items on the audio/navigation screen until the update is complete.**
  - **– Display Icon on/off Function**
  - **– Distance Indicator Image**
  - **– Warning Message**
- **On a steep hill, the system's automatic braking ability will be reduced.**
- **The system is designed to avoid collisions by automatic hard braking when the vehicle's reversing speed is less than approximately 5 km/h (3 mph). However, the system does not guarantee that the vehicle will be able to avoid collisions in any situation.**
- **If the vehicle is reversed at an extremely slow speed, the driver's operation may be prioritized. In this case, automatic braking will not operate.**

- The system may not be able to detect the following objects
  - Sharp or thin objects such as poles, fences and ropes which may not reflect the sound wave emitted from the sonar sensor
  - Objects that are too close to the rear bumper when the select lever is set to the “R” position
  - Objects with a surface which may not reflect the sound wave emitted from the sonar sensor such as a chain link fence.
- Objects the system is not designed to detect
  - Pedestrians
  - Moving objects including moving vehicles
  - Objects which absorb sound waves such as cloth or snow
  - Objects whose surface has a diagonal angle
  - Objects that are low to the ground such as parking blocks
  - Objects that are high above the ground such as objects hanging from above
- The system may not be able to properly detect objects or may cause a system malfunction when the following conditions exist

High frequency sound from other sources are nearby
- Horn sound from another vehicle
- Engine sound from other vehicles
- Sound of an air brake
- Vehicle detection equipment or a sonar from another vehicle
- A sound wave with a frequency similar to the vehicle’s system is transmitted nearby
- A vehicle equipped with the same system is reversing toward your reversing direction

Weather conditions
- Extremely high or extremely low temperatures in which the area near the sonar sensor becomes too hot or too cold to operate
- The sonar sensors or the rear bumper near the sonar sensors is exposed to heavy rain or a significant amount of water
- Fog, snow or sandstorm, etc.
- Air is moving rapidly such as when a strong wind is blowing

Parts attached to the rear bumper near the sonar sensor
- Commercial electronic parts (fog light, fender pole, radio antenna) or commercial attachment parts (trailer hitch, bicycle carrier, bumper guard) are attached
- Parts that emit high frequency sound, such as a horn or speaker, are attached

Vehicle conditions
- The vehicle is significantly inclined
- The ground clearance is significantly reduced due to the vehicle’s loading condition, etc.
- When the sonar sensor is misaligned due to a collision or an accident

Surrounding environment
- A cloth banner, flag, hanging branch or railroad crossing bars are present in the reversing direction
- When reversing on a gravel or grassy area
- When reversing in an area where objects or walls are adjacent to the vehicle such as narrow tunnels, narrow bridges, narrow roads or narrow garages
- Wheel tracks or a hole is present in the ground of the reversing direction

– CONTINUED –

**– When reversing over a drainage cover (grate cover)**

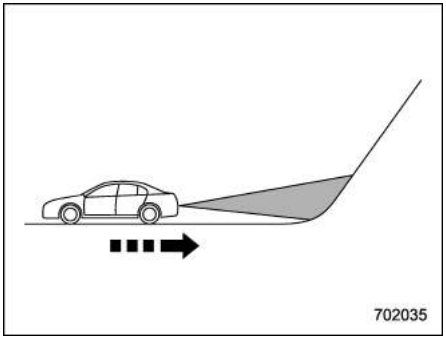


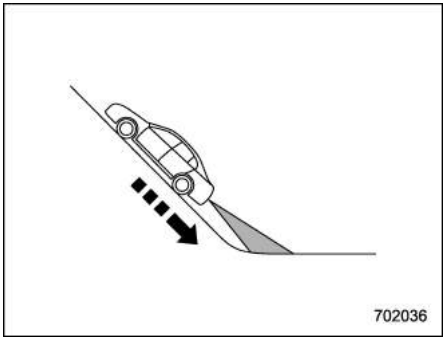


**– The path of the reversing direction is inclined such as on a steep uphill**

**– A curb is present in the reversing direction**

**– When reversing downhill**

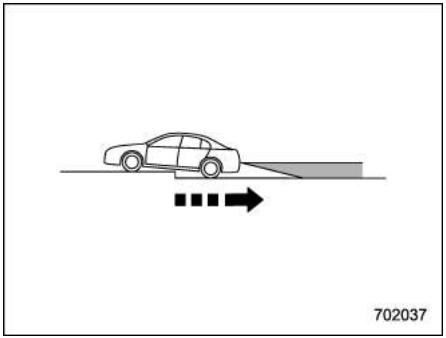


**– When reversing on an uneven road**

**● In circumstances such as the following, it may not be possible to avoid a collision even when the system operates normally.**

**– Roads are slippery.**

**– The tire air pressure is not correct.**

**– The tires have become worn.**

**– Tire chains are installed.**

**– Tires which are not the designated size are installed.**

**– Emergency repairs were performed using a puncture repair kit.**

**– The suspension was modified.**

**– Vehicle driving is unstable due to accident or malfunction.**

**– The brake warning light is illuminated.**

## ■ Reverse Automatic Braking System operation

When the Reverse Automatic Braking System is in operation, the range between the vehicle and the detected object will be indicated on the audio/navigation monitor. Also, warning sounds will activate in 3 levels to warn the driver of a potential collision.

While the RAB is operating, a warning message is displayed on the audio/navigation monitor and the combination meter display (color LCD).

Guideline of detecting range

| Alert level | Range of detected object* | Distance indicator | Alarm pattern |
|---|---|---|---|
| Long proximity (object detected) | 90 cm (35 in) | Green | No warning sound |
| Medium proximity alert (approaching the object) | 70 to 90 cm (28 to 35 in) | Yellow | Short beeps |
| Short proximity alert (approaching closer to the object) | 50 to 70 cm (20 to 28 in) | Orange | Rapid short beeps |
| Closest proximity alert (too close to the object) | 50 cm (20 in) or less | Red | Continuous beep |

*: Range of detection may vary depending on the environmental condition.

## ▼ Obstacle detected and alert level

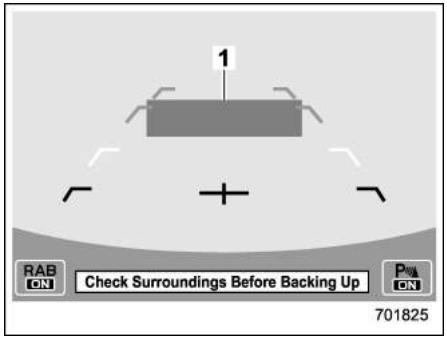


**Long proximity alert (object detected)**

1) Green: 90 cm (35 in) or more

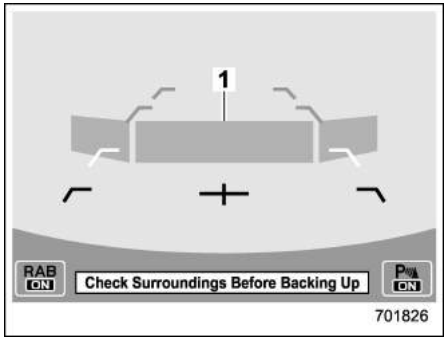


**Medium proximity alert (approaching the object)**

1) Yellow: 70 to 90 cm (28 to 35 in)

– CONTINUED –

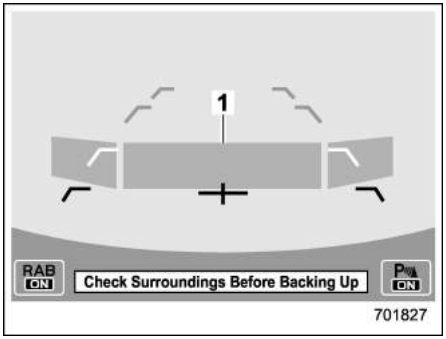


**Short proximity alert (approaching the object closer)**
1) Orange: 50 to 70 cm (20 to 28 in)

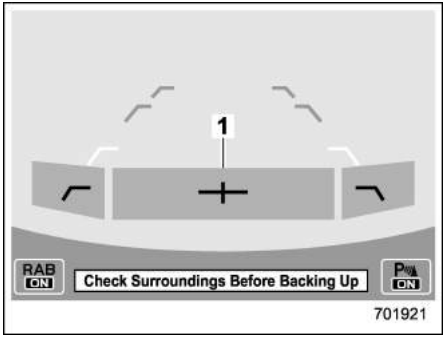


**Closest proximity alert (too close to the object)**
1) Red: 50 cm (20 in) or less

When an object is detected in the reversing direction, the range of detected object will be shown on the audio/navigation monitor.

A warning alarm will sound and, depending on the speed, either torque control to generate engine braking or automatic braking will be applied.

### ▼ Object close behind warning

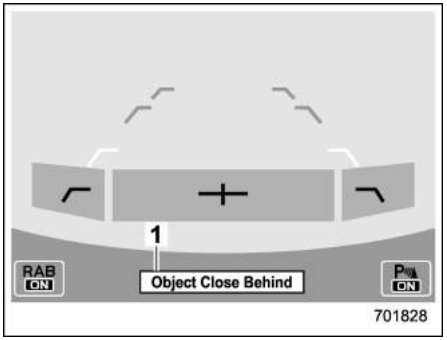


**Automatic braking warning**
1) Warning message

If the vehicle continues to go in reverse, the system may determine the risk of collision with the object. In this case, short warning beeps or continuous warning beeps will sound and either strong automatic braking or torque control will be applied to prevent collision.

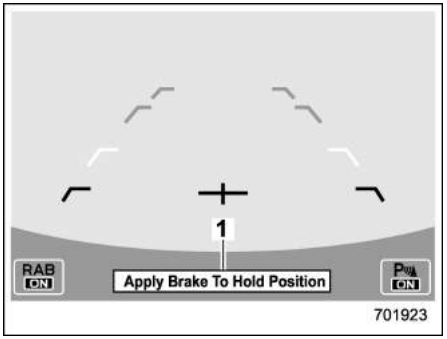


**Depress brake pedal warning**
1) Warning message

Make sure to depress the brake pedal once the vehicle has been stopped by automatic braking. Until the brake pedal is depressed, a message will be displayed on the audio/navigation monitor and the continuous beep will remain sounding.

At this time, a warning message is also displayed on the combination meter display (color LCD).

**⚠ WARNING**

**When the vehicle was stopped by automatic braking, be sure to depress the brake pedal right away. There is the risk that the vehicle may start moving.**

▼ **After the vehicle is stopped by the system**

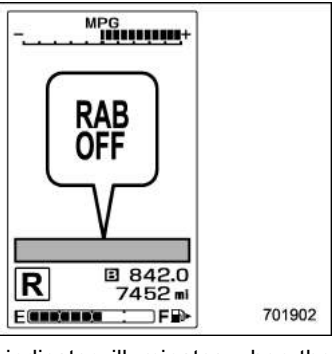


RAB OFF indicator: illuminates when the Reverse Automatic Braking system is turned OFF.

After the brake pedal is depressed, the Reverse Automatic Braking system OFF indicator will illuminate and the system will temporarily stop operating. The Reverse Automatic Braking system OFF indicator will turn off when the select lever is shifted to a position other than the "R" position.

The system will operate again the next time the select lever is shifted to "R" position.

## NOTE

- **In the following cases, after the vehicle has been stopped by the Reverse Automatic Braking system, brake control is released and the electronic parking brake operates. For details about releasing the parking brake, refer to "Electronic parking brake" ☞7-31.**
  - **– When 2 minutes pass after the vehicle is stopped**
  - **– When any door is opened**
  - **– When the Reverse Automatic Braking system stops temporarily**
- **The Reverse Automatic Braking system may stop operating temporarily in the following cases and the Reverse Automatic Braking system OFF indicator will illuminate.**
  - **– Ice, snow or mud is adhered to the sonar sensors or the rear bumper near the sonar sensor.**
  - **– Objects are too close to the rear bumper when the select lever is set to the "R" position.**
  - **– The system detects sounds of a similar frequency to the RAB sonar.**

## ■ Canceling the Reverse Automatic Braking system operation

The Reverse Automatic Braking system can be temporarily canceled by any of the following operations.

- While the vehicle is stopped by the operation of automatic braking, the brake pedal is depressed
- While the vehicle is stopped by the operation of automatic braking, the accelerator pedal is depressed
- The accelerator pedal is kept depressed (In this case, limited acceleration will be canceled and the vehicle will continue reversing.)
- The select lever is shifted to a position other than the "R" position

## NOTE

**The system will be canceled if the object is no longer detected.**

– CONTINUED –

## ■ Reverse Automatic Braking system ON/OFF setting

While the select lever is shifted to the “R” position, the below functions of the Reverse Automatic Braking system can be set by operating the audio/navigation monitor.

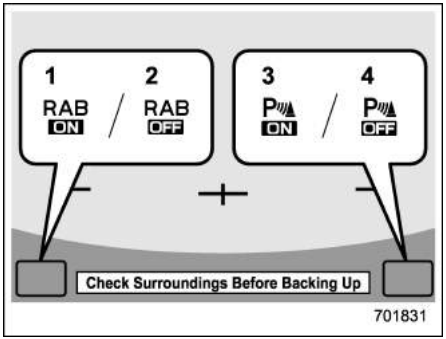


1) ON setting key of Reverse Automatic Braking
2) OFF setting key of Reverse Automatic Braking
3) ON setting key of the object detection warning beeping sound
4) OFF setting key of the object detection warning beeping sound

When the ON setting key is shown, the corresponding setting is ON.

Touch and hold the ON setting key to turn the setting OFF.

When the OFF setting is shown, the corresponding setting is OFF.

Touch and hold the OFF setting key to turn the setting ON.

When the Reverse Automatic Braking system is turned OFF, the following indicator will illuminate.

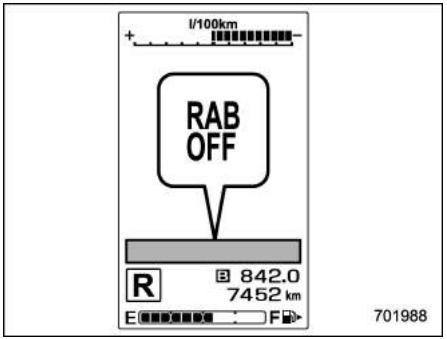


RAB OFF indicator: illuminates when the Reverse Automatic Braking system is turned OFF.

RAB OFF indicator will turn off when the Reverse Automatic Braking system is turned ON.

## NOTE

- **When the settings cannot be changed, the ON/OFF setting key will be grayed out.**
- **The ON/OFF setting key may be greyed out if the Reverse Automatic Braking system malfunctions, etc. In this case, turn the ignition switch to the “LOCK”/“OFF” position and then turn it to the “ON” position again. If the setting cannot be changed even after turning the ignition switch to the “ON” position again, we recommend that you consult your SUBARU dealer.**
- **The following settings will be restored when the ignition switch is turned to the “LOCK”/“OFF” position and then is turned to the “ON” position. The settings are originally set on the combination meter display (color LCD).**
  - **Reverse Automatic Braking system settings**
  - **Object detection warning beeping sound**

Also, the following settings can be changed by operating the combination meter display (color LCD).

- Warning volume
- Sonar audible alarm ON/OFF
- RAB ON/OFF

For details, refer to “Menu screens” ☞3-42.

## ■ RAB warning indicator

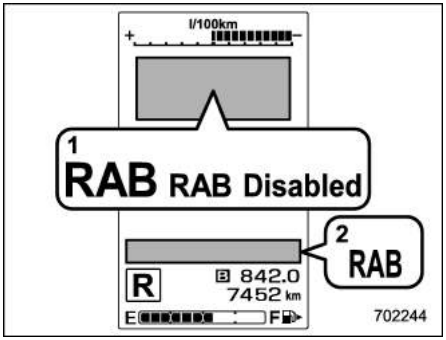


1) RAB malfunction message
2) RAB warning indicator

If the Reverse Automatic Braking System malfunctions, the above indicator illuminates on the combination meter. We recommend that you contact the nearest SUBARU dealer for details.

## ■ Handling of the sonar sensors

The 4 sonar sensors are located in the rear bumper. To ensure the proper operation of the Reverse Automatic Braking system, observe the following precautions.

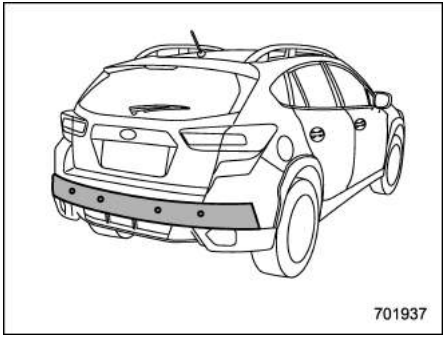


- Do not affix any stickers or other items on the sonar sensors or the bumper surface near the sonar sensors.
- Always keep the sonar sensors and the rear bumper surface near the sonar sensors clean.
- Do not modify the rear bumper.
- Do not paint the bumper near the sonar sensors.
- Do not apply strong impacts to the rear bumper near the sonar sensors. If a sensor becomes misaligned, a system malfunction may occur, including inability to detect objects in the reversing direction. If any strong impact is applied to the rear bumper, we recommend that you contact a SUBARU dealer to have the system inspected.
- Do not disassemble the sonar sensors.

### NOTE

**If the sonar sensors require repair or replacement, or if the area of the rear bumper near the sonar sensors requires repair, paintwork or replacement, we recommend that you contact your SUBARU dealer for assistance.**

New vehicle break-in driving – the first 1,600 km (1,000 miles) ..... 8-2
Fuel economy hints ..... 8-2
Engine exhaust gas (carbon monoxide) ..... 8-2
Catalytic converter ..... 8-3
Periodic inspections ..... 8-4
Driving in foreign countries ..... 8-4
Driving in a foreign country in which the vehicular lane is different to your country ..... 8-4
Driving tips for AWD models ..... 8-6
Off road driving ..... 8-7
Before driving ..... 8-8
During driving ..... 8-8
After driving ..... 8-9
Winter driving ..... 8-9
Operation during cold weather ..... 8-9
Driving on snowy and icy roads ..... 8-10
Corrosion protection ..... 8-11
Snow tires ..... 8-11
Tire chains ..... 8-12
Rocking the vehicle ..... 8-12
Loading your vehicle ..... 8-13
Safety precautions ..... 8-13
Roof molding and load carrier (if equipped) ..... 8-13
Roof rails (if equipped) ..... 8-14
Trailer towing ..... 8-15
Maintenance ..... 8-16
Towing weight ..... 8-16
Trailer hitches (dealer option) ..... 8-16
When you do not tow a trailer ..... 8-16
Trailer safety chains ..... 8-16
Outside mirrors ..... 8-17
Trailer lights ..... 8-17
Tires ..... 8-17
Trailer towing tips ..... 8-18
Additional information for Europe ..... 8-20

## New vehicle break-in driving – the first 1,600 km (1,000 miles)

The performance and long life of your vehicle are dependent on how you handle and care for your vehicle while it is new. Follow these instructions during the first 1,600 km (1,000 miles):

- Do not allow the engine speed to exceed 4,000 rpm except in an emergency.
- Do not drive at one constant engine or vehicle speed, either fast or slow.
- Avoid starting suddenly and rapid acceleration, except in an emergency.
- Avoid hard braking, except in an emergency.

The same break-in procedures should be applied to an overhauled engine, newly mounted engine or when brake pads or brake linings are replaced with new ones.

## Fuel economy hints

The following suggestions will help to save your fuel.

- Select the proper gear position for the speed and road conditions.
- Avoid sudden acceleration or deceleration. Always accelerate gently until you reach the desired speed. Then try to maintain that speed for as long as possible.
- Do not pump the accelerator pedal and avoid racing the engine.
- Avoid unnecessary engine idling.
- Keep the engine properly tuned.
- Keep the tires inflated to the correct pressure shown on the tire placard, which is located under the door latch on the driver's side. Low pressure will increase tire wear and fuel consumption.
- Use the air conditioner only when necessary.
- Keep the front and rear wheels in proper alignment.
- Avoid carrying unnecessary luggage or cargo.

## Engine exhaust gas (carbon monoxide)

**WARNING**

- **Never inhale engine exhaust gas. Engine exhaust gas contains carbon monoxide, a colorless and odorless gas which is dangerous, or even lethal, if inhaled.**
- **Always properly maintain the engine exhaust system to prevent engine exhaust gas from entering the vehicle.**
- **Never run the engine in a closed space, such as a garage, except for the brief time needed to drive the vehicle in or out of it.**
- **Avoid remaining in a parked vehicle for a lengthy time while the engine is running. If that is unavoidable, then use the ventilation fan to force fresh air into the vehicle.**
- **Always keep the front ventilator inlet grille free from snow, leaves or other obstructions to ensure that the ventilation system always works properly.**
- **If at any time you suspect that**

**exhaust fumes are entering the vehicle, have the problem checked and corrected as soon as possible. If you must drive under these conditions, drive only with all windows fully open.**

- **Keep the rear gate closed while driving to prevent exhaust gas from entering the vehicle.**

## NOTE

**Due to the expansion and contraction of the metals used in the manufacture of the exhaust system, you may hear a crackling sound coming from the exhaust system for a short time after the engine has been shut off. This sound is normal.**

## Catalytic converter

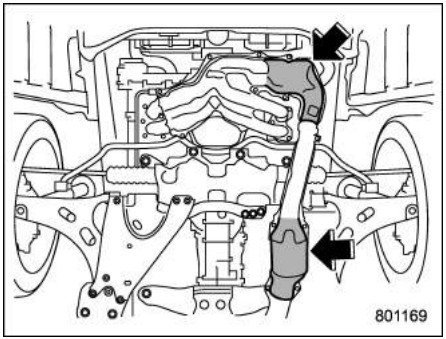


The catalytic converter is installed in the exhaust system. It serves as catalyst to reduce HC, CO and NOx in exhaust gases, thus providing cleaner exhaust.

To avoid damage to the catalytic converter:

- Use only unleaded petrol. Even a small amount of leaded fuel will damage the catalytic converter.
- Never start the engine by pushing or pulling the vehicle.
- Avoid racing the engine.
- Never turn off the ignition switch while the vehicle is moving.
- Keep your engine tuned-up. If you feel the engine running rough (misfiring, backfiring or incomplete combustion), we recommend that you have your vehicle checked and repaired by an authorized SUBARU dealer.
- Do not apply undercoating or rust prevention treatment to the heat shield of catalytic converter and the exhaust system.
- Do not drive with an extremely low fuel level.

**WARNING**

- **Avoid fire hazards. Do not drive or park the vehicle anywhere near flammable materials (e.g. grass, paper, rags or leaves), because the catalytic converter operates at very high temperatures.**
- **Keep everyone and flammable materials away from the exhaust pipe while the engine is running. The exhaust gas is very hot.**

## Periodic inspections

To keep your vehicle in the best condition at all times, always have the recommended maintenance services listed in the maintenance schedule performed at the specified time or mileage intervals.

## Driving in foreign countries

When planning to use your vehicle in another country:

- Confirm the availability of the correct fuel. Refer to “Fuel” ☞7-3.
- Comply with all regulations and requirements of each country.

### ■ Driving in a foreign country in which the vehicular lane is different to your country

When you drive in a foreign country in which the vehicular lane (left-hand traffic or right-hand traffic) is different from your country, to avoid blinding the oncoming driver, you need to block a part of the headlight lenses.

We recommend that you consult a SUBARU dealer concerning whether the headlight of your vehicle is designed for left-hand traffic or right-hand traffic. Refer to the following method when you attach lightproof adhesive tape to the headlight lenses.

**▼ When you drive a vehicle that is designed for left-hand traffic in right-hand traffic countries (models with halogen light)**

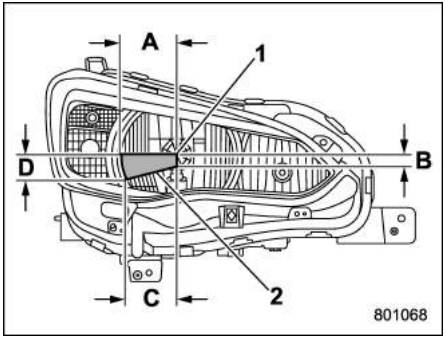


**Right side headlight**

1) Bulb center
2) Lightproof adhesive tape

A) 72 mm (2.83 in)
B) 15 mm (0.59 in)
C) 65 mm (2.56 in)
D) 32.4 mm (1.28 in)

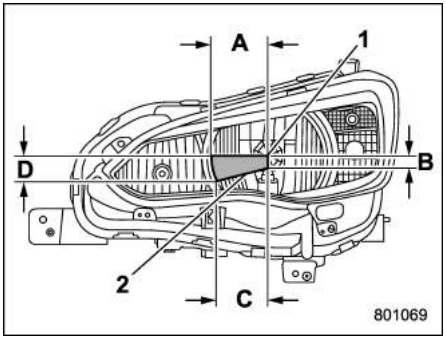


**Left side headlight**
1) Bulb center
2) Lightproof adhesive tape
A) 72 mm (2.83 in)
B) 15 mm (0.59 in)
C) 65 mm (2.56 in)
D) 32.4 mm (1.28 in)

▼ **When you drive a vehicle that is designed for right-hand traffic in left-hand traffic countries (models with halogen light)**

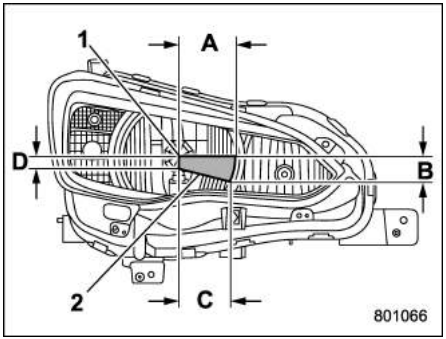


**Right side headlight**
1) Bulb center
2) Lightproof adhesive tape
A) 72 mm (2.83 in)
B) 32.4 mm (1.28 in)
C) 65 mm (2.56 in)
D) 15 mm (0.59 in)

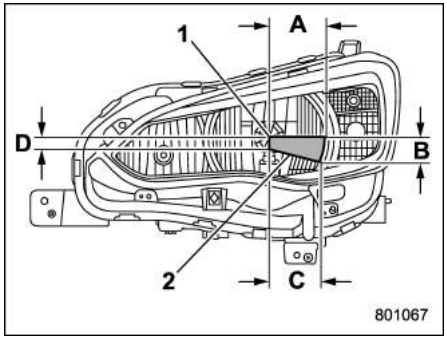


**Left side headlight**
1) Bulb center
2) Lightproof adhesive tape
A) 72 mm (2.83 in)
B) 32.4 mm (1.28 in)
C) 65 mm (2.56 in)
D) 15 mm (0.59 in)

## Driving tips for AWD models

**WARNING**

- **Always maintain a safe driving speed according to the road and weather conditions in order to avoid having an accident on a sharp turn, during sudden braking or under other similar conditions.**
- **Always use the utmost care in driving – overconfidence because you are driving an All-Wheel Drive vehicle could easily lead to a serious accident.**
- **When replacing or installing tire(s), all four tires must be the same for the following items.**

  **(a) Size**

  **(b) Circumference**

  **(c) Speed symbol**

  **(d) Load index**

  **(e) Construction**

  **(f) Manufacturer**

  **(g) Brand (tread pattern)**

  **(h) Degrees of wear**

  **For items (a) to (d), you must obey the specification that is printed on the tire placard. The tire placard is located on the driver's door pillar.**

  **If all four tires are not the same in items (a) to (h), there is a possibility that it may lead to serious mechanical damage to the drive train of your car and affect the following factors.**

  **– Ride**

  **– Handling**

  **– Braking**

  **– Speedometer/Odometer calibration**

  **– Clearance between the body and the tires**

  **It also may be dangerous and lead to loss of vehicle control, and it can lead to an accident.**

**CAUTION**

**If you use a temporary spare tire to replace a flat tire, be sure to use the original temporary spare tire stored in the vehicle. Using other sizes may result in severe mechanical damage to the drive train of your vehicle.**

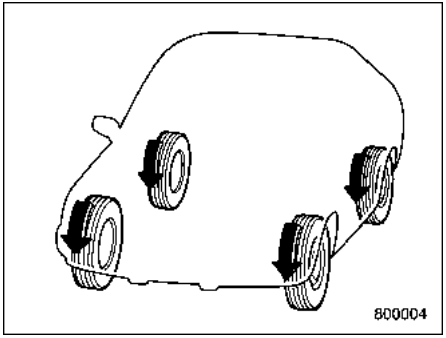


All-Wheel Drive distributes the engine power to all four wheels.

AWD models provide better traction when driving on slippery, wet or snow-covered roads and when moving out of mud, sand or dirt. These vehicles, however, are not designed for off road use. If you do this, the vehicles may experience excessive stress. AWD vehicles should be driven only under the same conditions suitable for

ordinary front wheel drive vehicles.

For safety purpose as well as to avoid damaging the AWD system, you should keep the following tips in mind:

- An AWD vehicle is better able to climb steeper roads under snowy or slippery conditions than a front wheel drive vehicle. There is little difference in handling, however, during extremely sharp turns or sudden braking. Therefore, when driving down a slope or turning corners, be sure to reduce your speed and maintain an ample distance from other vehicles.
- Never attempt to drive through pools and puddles, or roads flooded with water. Water entering the engine air intake or the exhaust pipe or water splashing onto electrical parts may damage your vehicle and may cause it to stall.
- An AWD vehicle can be used to traverse difficult areas covered with snow, mud and slush, or sand and dirt. It is, however, designed as an all-road vehicle and not as an all-terrain vehicle. For this reason, an AWD vehicle should be handled with as much care as an ordinary passenger vehicle.
- Always check your brakes for effectiveness immediately after driving in sand, mud or puddle. Do this by driving slowly and stepping on the brake pedal. Repeat that process several times to dry out the brake discs and brake pads.
- Always check the cold tire pressure before starting to drive. The recommended tire pressure is provided on the tire placard, which is located under the door latch on the driver's side.
- Tire chains should always be placed on the front wheels only.
- Frequent driving of an AWD vehicle under hard-driving conditions such as steep hills or dusty roads will necessitate more frequent replacement of the following items than that specified in "Maintenance schedule" ☞11-3.
  - Engine oil
  - Brake fluid
  - Rear differential gear oil
  - Continuously variable transmission fluid
  - Front differential gear oil
- There are some precautions that you must observe when towing your vehicle. For detail information, refer to "Towing" ☞9-23.

## Off road driving

**WARNING**

- **Always maintain a safe driving speed according to the road and weather conditions in order to avoid having an accident on a sharp turn, during sudden braking or under other similar conditions.**
- **Always use the utmost care in driving – overconfidence because you are driving an All-Wheel Drive vehicle could easily lead to a serious accident.**

**CAUTION**

**Frequent driving of an AWD model under hard-driving conditions such as rough roads or off roads will necessitate more frequent replacement of the following items than that specified in "Maintenance schedule" ☞11-3.**

- **Engine oil**
- **Brake fluid**

– CONTINUED –

Because of the AWD feature and higher ground clearance, you can drive your SUBARU on some limited off-roads. But please keep in mind that an AWD SUBARU is a passenger car and is neither a conventional off-road vehicle nor an all-terrain vehicle. If you do take your SUBARU off-road, certain common sense precautions such as those in the following list should be taken.

## ■ Before driving

- Make certain that you and all of your passengers are wearing seatbelts.
- Carry some emergency equipment, such as a towing rope or chain, a shovel, wheel blocks, first aid kit and cell phone or citizens band radio.
- Secure all cargo carried inside the vehicle and make certain that it is not piled higher than the seatbacks. During sudden stops or jolts, unsecured cargo could be thrown around in the vehicle and cause injury. Do not pile heavy loads on the roof. Those loads raise the vehicle's center of gravity and make it more prone to tip over.
- Never equip your vehicle with tires larger than those specified in this manual.

## ■ During driving

**General precautions:**

- Drive carefully. Do not take unnecessary risks by driving in dangerous areas or over rough terrain.
- Slow down and employ extra caution at all times. When driving off-road, you will not have the benefit of marked traffic lanes, banked curves, traffic signs and the like.
- Do not drive across steep slopes. Instead, drive either straight up or straight down the slopes. A vehicle can much more easily tip over sideways than it can end over end. Avoid driving straight up or down slopes that are too steep.
- Avoid sharp turning maneuvers, especially at higher speeds.
- Do not grip the inside or spokes of the steering wheel. A bad bump could jerk the wheel and injure your hands. Instead, drive with your fingers and thumbs on the outside of the rim.
- Do not drive or park over or near flammable materials such as dry grass or fallen leaves, as they may burn easily. The exhaust system is very hot while the engine is running and right after the engine stops. This could create a fire hazard.

**Precautions when driving under especially dangerous situations:**

- If driving through water, such as when crossing shallow streams:
  - First, check the depth of the water and the bottom of the stream bed for firmness.
  - Next, ensure that the bed of the stream is flat.
  - Then, drive slowly and completely through the stream. The water should be shallow enough that it does not reach the vehicle's undercarriage.
- Water entering the engine air intake or the exhaust pipe or water splashing onto electrical parts may damage your vehicle and may cause it to stall.
- Never drive through rushing water. Regardless of its depth, it can wash away the ground from under your tires, resulting in possible loss of traction and even vehicle rollover.
- If you must rock the vehicle to free it from sand or mud, depress the accelerator pedal slightly and move the select lever back and forth between "D" and "R" repeatedly. Do not race the engine. For the best possible traction, avoid spinning the wheels when trying to free the vehicle.
- When the road surface is extremely slippery, you can obtain better traction by starting the vehicle with the transmission in

2nd than 1st. Refer to “Selection of manual mode” ☞7-14.

## ■ After driving

- Always check your brakes for effectiveness immediately after driving in sand, mud or water. Do this by driving slowly and stepping on the brake pedal. Repeat that process several times to dry out the brake discs and brake pads.
- After driving through tall grass, mud, rocks, sand, rivers, etc., check that there is no grass, bush, paper, rags, stones, sand, etc. adhering to or trapped on the underbody. Clear off any such matter from the underbody. If the vehicle is used with these materials trapped or adhering to the underbody, a mechanical breakdown or fire could occur.
- Wash the vehicle’s underbody after off-road driving. Suspension components are particularly prone to dirt buildup, so they need to be washed thoroughly.

# Winter driving

## ■ Operation during cold weather

Carry some emergency equipment, such as tire chains, a window scraper, a bag of sand, flares, a small shovel, and jumper cables.

Check the battery and cables. Cold temperatures reduce battery capacity. The battery must be in good condition to provide enough power for cold winter starts.

It normally takes longer to start the engine in very cold weather conditions. Use an engine oil of a suitable grade and viscosity for cold weather. Using heavy summer oil will make it harder to start the engine.

Keep the door locks from freezing by squirting them with deicer or glycerin.

Forcing a frozen door open may damage or separate the rubber weather strips around the door. If the door is frozen, use hot water to melt the ice, and afterwards thoroughly wipe the water away.

Use a windshield washer fluid that contains an antifreeze solution. Do not use engine antifreeze or other substitutes because they may damage the paint of the vehicle.

If you fill the reservoir tank with a fluid with a different concentration from the one used previously, purge the old fluid from the piping between the reservoir tank and washer nozzles by operating the washer for a certain period of time. Otherwise, if the concentration of the fluid remaining in the piping is too low for the outside temperature, it may freeze and block the nozzles.

**⚠ CAUTION**

**Adjust the washer fluid concentration appropriately for the outside temperature. If the concentration is inappropriate, sprayed washer fluid may freeze on the windshield and obstruct your view, and the fluid may freeze in the reservoir tank.**

### ▼ Before driving your vehicle

Before entering the vehicle, remove any snow or ice from your shoes because that could make the pedals slippery and driving dangerous.

While warming up the vehicle before driving, check that the accelerator pedal, brake pedal, and all other controls operate smoothly.

– CONTINUED –

Clear away ice and snow that has accumulated under the fenders to avoid making steering difficult. During severe winter driving, stop when and where it is safe to do so and check under the fenders periodically.

▼ **Parking in cold weather**

**⚠ WARNING**

**Snow can trap dangerous exhaust gases under your vehicle. Keep snow clear of the exhaust pipe and from around your vehicle if you park the vehicle in snow with the engine running.**

**⚠ CAUTION**

- **Do not use the parking brake when parking for long periods in cold weather since it could freeze in that position.**
- **When the vehicle is parked in snow or when it snows, raise the wiper blades off the glass to prevent damage to them.**
- **When the vehicle has been left parked after use on roads heavily covered with snow, or has been left parked during a snowstorm, icing may develop on the brake system, which could cause poor braking action. Check for snow or ice buildup on the suspension, disc brakes and brake hoses underneath the vehicle. If there is caked snow or ice, remove it, being careful not to damage the disc brakes and brake hoses and ABS harness.**

When parking for long periods in cold weather, you should observe the following tips.

1. Place the select lever in the “P” position.
2. Use tire stops under the tires to prevent the vehicle from moving.

▼ **Refueling in cold weather**

To help prevent moisture from forming in the fuel system and the risk of its freezing, use of an antifreeze additive in the fuel tank is recommended during cold weather.

Use only additives that are specifically designed for this purpose. When an antifreeze additive is used, its effect lasts longer if the tank is refilled whenever the fuel level reaches half empty.

If your SUBARU is not going to be used for an extended period, it is best to have the fuel tank filled to capacity.

## ■ Driving on snowy and icy roads

To prevent skidding and slipping, avoid sudden braking, abrupt acceleration, high-speed driving, and sharp turning when driving on snowy or icy roads.

Always maintain ample distance between your vehicle and the vehicle ahead of you to avoid the need for sudden braking.

To supplement the foot brake, use the engine brake effectively to control the vehicle speed. (Shift into a lower gear when necessary.)

Avoid shifting down abruptly. Such behavior can cause the wheels to lock, possibly leading to loss of vehicle control.

An anti-lock brake system (ABS) enhances your vehicle’s braking performance on snowy and icy roads. For information about braking on slippery surfaces, refer to “ABS (Anti-lock Brake System)” ☞7-22 and “Vehicle Dynamics Control system” ☞7-24.

**WARNING**

**For models with cruise control:**

**Do not use the cruise control on slippery roads such as snowy or icy roads. This may cause loss of vehicle control.**

**CAUTION**

**Avoid prolonged continuous driving in snowstorms. Snow will enter the engine's intake system and may hinder the airflow, which could result in engine shutdown or even breakdown.**

### ▼ Wiper operation when snowing

Before driving in cold weather, make sure the wiper rubbers are not frozen to the windshield or rear window.

If the wiper rubbers are frozen to the windshield or rear window, perform the following procedure.

- To thaw the windshield wiper rubbers, use the defroster and set the temperature for maximum warmth until the wiper rubbers are completely thawed. Refer to "Defrosting" ☞4-11.
- If your vehicle is equipped with a wiper deicer, use it. It is helpful to thaw the windshield wiper rubbers. Refer to "Defogger and deicer" ☞3-93.
- To thaw the rear wiper rubber, use the rear window defogger. Refer to "Defogger and deicer" ☞3-93.

When driving in snow, if frozen snow starts to stick on the surface of the windshield despite wiper operation, use the defroster and set the temperature for maximum warmth. After the windshield gets warmed enough to melt the frozen snow on it, wash it away using the windshield washer. Refer to "Windshield washer" ☞3-88.

Snow stuck on the wiper arm prevents the wiper from working effectively. If snow is stuck on the wiper arm, pull off the road to a safe place, then remove it. If you stop the vehicle at road side, use the hazard warning flasher to alert other drivers. Refer to "Hazard warning flasher" ☞3-8.

## ■ Corrosion protection

Refer to "Corrosion protection" ☞10-4.

## ■ Snow tires

**WARNING**

- **When replacing original tires with winter (snow) tires, all four tires must be the same for the following items.**
  **(a) Size**
  **(b) Circumference**
  **(c) Speed symbol**
  **(d) Load index**
  **(e) Construction**
  **(f) Manufacturer**
  **(g) Brand (tread pattern)**
  **(h) Degrees of wear**

  **For items (a) to (d), you must obey the specification that is printed on the tire placard. The tire placard is located on the driver's door pillar.**

  **If all four tires are not the same in items (a) to (h), there is a possibility that it may lead to serious mechanical damage to the drive train of your car and affect the following factors.**
  **– Ride**

– CONTINUED –

- **Handling**
- **Braking**
- **Speedometer/Odometer calibration**
- **Clearance between the body and the tires**

**It also may be dangerous and lead to loss of vehicle control, and it can lead to an accident.**

- **Do not use a combination of radial, belted bias or bias tires since it may cause dangerous handling characteristics and lead to an accident.**

In winter, it may be possible to enhance performance through use of tires designed specifically for winter driving conditions. If you choose to install winter tires on your vehicle, be sure to use the correct tire size and type. All four tires must be of the same size, construction, brand and load index and you should never mix radial, belted bias or bias tires since this may result in dangerous handling characteristics. Remember to drive with care at all times regardless of the type of tires on your vehicle.

When using winter tires (speed symbol Q, T or H) never exceed 160 km/h (99 mph), 190 km/h (118 mph) or 210 km/h (130 mph), respectively.

## ■ Tire chains

If it is necessary to use the tire chains for driving on snowy grades or icy roads, observe the following precautions:

- Put the chains on the front wheels only.
- Use only chains that are of the correct size for your tires so as not to damage the vehicle body or suspension.
- Do not put a tire chain on the temporary spare tire.
- When driving with tire chains, drive at speeds below 30 km/h (19 mph).

Always use the utmost care when driving with tire chains – overconfidence because you are driving with tire chains could easily lead to a serious accident.

▼ **Models with flat tire repair kit**

**⚠ WARNING**

**When any of the tires is punctured, you can seal the tire temporarily. However, do not use the tire chain on a sealed tire. If either of the front tires is punctured although it is required to use tire chains, we recommend that you contact the nearest SUBARU dealer.**

## ■ Rocking the vehicle

If you must rock the vehicle to free it from snow, sand, or mud, depress the accelerator pedal slightly and move the select lever back and forth between “D” and “R” repeatedly. Do not race the engine. For the best possible traction, avoid spinning the wheels when trying to free the vehicle.

When the road surface is extremely slippery, you can obtain better traction by starting the vehicle with the transmission in 2nd than 1st (CVT with manual mode).

If your vehicle is a CVT with manual mode, for information about holding the transmission in the 2nd position, refer to “Selection of manual mode” ☞7-14.

## Loading your vehicle

### NOTE

**For better fuel economy, do not carry unneeded cargo.**

### ■ Safety precautions

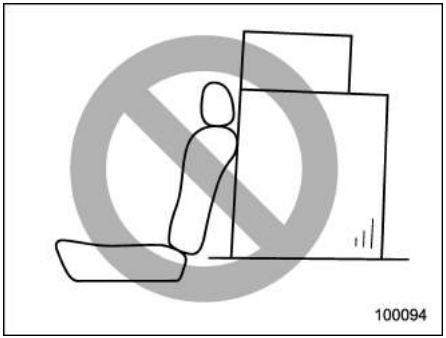


**⚠ WARNING**

- **Never stack luggage or other cargo higher than the top of the seatback because it could tumble forward and injure passengers in the event of a sudden stop or accident. Keep luggage or cargo low, as close to the floor as possible.**
- **Never allow passengers to ride on a folded rear seatback, in the cargo area. Doing so may result in serious injury.**
- **When you carry something inside the vehicle, secure it whenever you can to prevent it from being thrown around inside the vehicle during sudden stops, sharp turns or in an accident.**
- **Do not pile heavy loads on the roof. These loads raise the vehicle's center of gravity and make it more prone to tip over.**
- **Secure lengthy items properly to prevent them from shooting forward and causing serious injury during a sudden stop.**
- **Do not place anything on the extended cargo area cover. Such items could tumble forward in the event of a sudden stop or a collision. This could cause serious injury.**

**⚠ CAUTION**

**Do not carry spray cans, containers with flammable or corrosive liquids or any other dangerous items inside the vehicle.**

### ■ Roof molding and load carrier (if equipped)

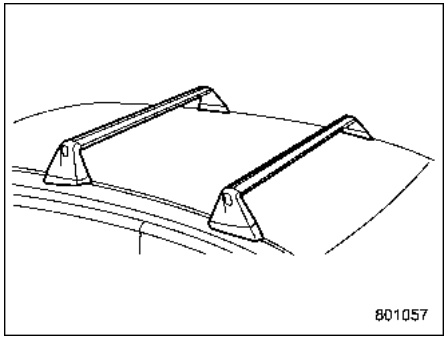


**⚠ CAUTION**

- **For cargo carrying purposes, the roof moldings must be used together with a load carrier kit and the appropriate carrying attachments. Otherwise, damage to the roof or paint or a danger-**

– CONTINUED –

**ous road hazard due to loss of cargo could result.**

- **When using the load carrier kit, make sure that the total weight of the load carrier kit, carrying attachments and cargo does not exceed the maximum load limit. Overloading may cause damage to the vehicle and create a safety hazard.**

Cargo can be carried after securing the load carrier kit to the roof moldings and installing the appropriate carrying attachments. When installing the load carrier kit, follow the manufacturer's instructions.

The maximum load limit of the cargo, load carrier kit and carrying attachments must not exceed **80 kg (176 lbs)**. Place the heaviest load at the bottom, nearest the roof, and evenly distribute the cargo. Always properly secure all cargo.

### ▼ Installing carrying attachments on the load carrier

When installing any carrying attachments such as the load carriers, bike carrier, ski carrier, kayak carrier, cargo basket, etc., follow the manufacturer's instructions of the load capacity and make sure that the attachments are securely installed. Use only attachments designed specifically for the load carrier. Before operating the vehicle, make sure that the cargo is properly secured on the attachments.

## NOTE

**Remember that the vehicle's center of gravity is altered with the weight of the load on the roof, thus affecting the driving characteristics.**

**Drive carefully. Avoid rapid starts, hard cornering and abrupt stops. Crosswind effects will be increased.**

### ▼ Removal and installation of the load carrier

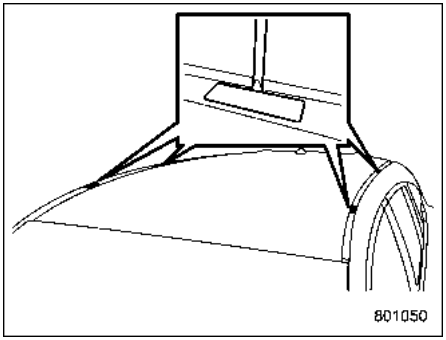


Each of the two roof moldings has two mounting points for the load carrier kit. Each mounting point is fitted with a cover. Use a flat-head screwdriver to remove the covers. When installing the load carrier kit on the roof moldings, follow the manufacturer's instructions.

## ■ Roof rails (if equipped)

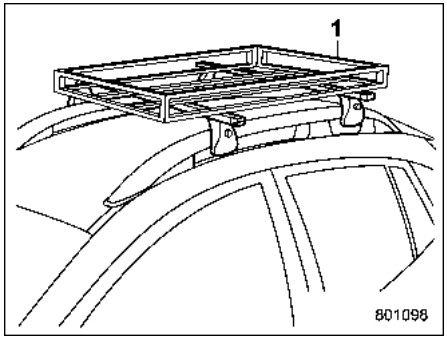


1) Load carrier

Cargo can be carried on the roof after securing the load carrier to the roof rails. When installing the load carrier on the roof rails, follow the manufacturer's instructions. The roof rails are designed to carry loads (cargo and load carrier) of no more than **80 kg (176 lbs)**.

**⚠ CAUTION**

- **When using the load carrier, make sure that the total carry load of the cargo and load carrier**

**does not exceed 80 kg (176 lbs). Overloading may cause damage to the vehicle.**

- **For cargo carrying purposes, the roof rails must be used together with the load carrier. The roof rails must never be used alone to carry cargo. Otherwise, damage to the roof or paint, or a dangerous road hazard due to loss of cargo could result.**

When installing any carrying attachments such as the load carriers, bike carrier, ski carrier, kayak carrier, cargo basket, etc., follow the manufacturer's instructions regarding the load capacity and make sure that the attachments are securely installed. Use only attachments designed specifically for the load carrier. Before operating the vehicle, make sure that the cargo is properly secured on the attachments.

## NOTE

**Remember that the vehicle's center of gravity is altered with the weight of the load on the roof, thus affecting driving characteristics.**

**Drive carefully. Avoid rapid starts, hard cornering and abrupt stops. Crosswind effects will be increased.**

# Trailer towing

**WARNING**

- **For models with flat tire repair kit: When any of the tires are punctured, you can seal the tire temporarily. However, do not tow a trailer when a sealed tire is used. We recommend that you consult the nearest SUBARU dealer for details.**
- **Use only the ball mount that is suitable for the trailer hitch. Use the hitch only as a weight carrying hitch. Do not use with any type of weight distributing hitch.**
- **The standard bumper beam must be installed after you remove the trailer hitch. We recommend that you consult a SUBARU dealer for purchase of a standard bumper beam if you do not have the original.**
- **Safety performance is decreased and there is increased risk of injury to passengers in the case of an accident if the trailer hitch or a standard bumper beam is not installed. One of them must always be installed on the vehicle.**
- **If a trailer hitch is installed, it is not possible to install the rear towing hook (eye bolt).**

Your vehicle is designed and intended to be used primarily as a passenger-carrying vehicle. Towing a trailer puts additional loads on your vehicle's engine, drive train, brakes, tires and suspension and has an adverse effect on fuel economy.

In some countries, there are some regulations which you have to obey when towing a trailer. If you do decide to tow a trailer, your safety and satisfaction depend upon proper use of correct equipment and cautious operation of your vehicle. We recommend that you seek the advice of your SUBARU dealer to assist you in purchasing a hitch and other necessary towing equipment appropriate for your vehicle. In addition, be sure to follow the instructions on correct installation and use provided by the trailer and other towing equipment manufacturers.

SUBARU assumes no responsibility for injuries or vehicle damage that result from trailer towing equipment, or from any errors or omissions in the instructions accompanying such equipment or for your failure to follow the proper instructions.

– CONTINUED –

## NOTE

**Auto Start Stop system (if equipped) will not operate when towing a trailer. Refer to "Auto Start Stop system" ☞7-47.**

## ■ Maintenance

If you use your vehicle to tow a trailer, more frequent maintenance will be required due to the additional load. Refer to "Maintenance schedule" ☞11-3.

Under no circumstances should a trailer be towed with a new vehicle or a vehicle with any new powertrain component (engine, transmission, differential, wheel bearings, etc.) for the first 1,600 km (1,000 miles) of driving.

## ■ Towing weight

Before towing a trailer, we recommend that you confirm the towing capacity and ball coupling load with your nearest SUBARU dealer or the vehicle registration documents and/or hitch installation manual and make sure your trailer is within the towing capacity.

The total trailer weight (trailer weight with brakes plus its cargo weight) must never exceed the maximum towing weight.

Remember that the ball coupling load will increase the load on the vehicle. Both the maximum permissible weight (MPW) and/or gross vehicle mass (GVM) and maximum permissible rear axle weight (rear MPAW) and/or rear gross axle laden rating (rear GALR) must not be exceeded.

**⚠ WARNING**

**Never exceed the maximum towing weight. Exceeding the maximum towing weight could cause personal injury and/or vehicle damage.**

## ■ Trailer hitches (dealer option)

The use of a genuine SUBARU trailer hitch is recommended. Consult your SUBARU dealer for details.

Regularly check that the hitch mounting bolts and nuts are tightened securely.

**⚠ CAUTION**

**Do not modify the vehicle exhaust system, brake system, or other system when installing a hitch or other trailer towing equipment.**

## ■ When you do not tow a trailer

**⚠ CAUTION**

- **The housing should be kept dirt and corrosion-free at the points of contact. The surfaces only require cleaning with a cloth. Grease or other lubricants should never be used.**
- **If the ball is not installed, the plastic insert should then be inserted for protection and to keep it clean.**

When the ball is not used, place the ball cap and store securely.

## ■ Trailer safety chains

In case the trailer hitch connector or hitch ball should break or become disconnected, the trailer could get loose and create a traffic safety hazard.

For safety, always connect the towing vehicle and trailer with trailer safety chains. Two chains should be used in total, one for the right side and one for the left side trailer tongues. Pass the chains crossing each other under the trailer tongue to prevent the trailer from dropping onto the ground in case the trailer tongue should disconnect from the hitch ball.

Allow sufficient slack in the chains taking tight-turn situations into account; however, be careful not to let them drag on the ground.

For more information about the safety chain connection, refer to the instructions for your hitch and trailer.

## ■ Outside mirrors

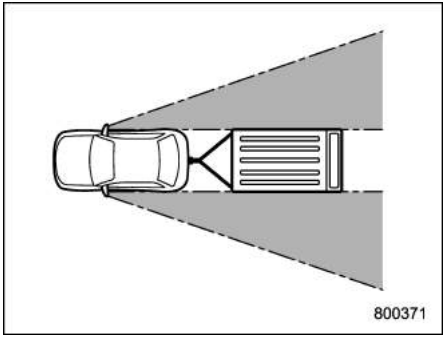


Many countries have regulations requiring special outside mirrors when towing a trailer. After hitching a trailer to your vehicle, check that the standard side mirrors provide a good rearward field of view without significant blind spots. If significant blind spots occur with the vehicle's standard side mirrors, use additional outside mirrors that conform with regulations.

## ■ Trailer lights

Connection of trailer lights to your vehicle's electrical system requires modifications to the vehicle's lighting circuit to increase its capacity and accommodate wiring changes. To ensure the trailer lights are connected properly, we recommend that you consult your SUBARU dealer. Check for proper operation of the turn signals and the brake lights each time you connect a trailer to your vehicle.

**⚠ CAUTION**

**Direct splicing or other improper connection of trailer lights may damage your vehicle's electrical system and cause a malfunction of your vehicle lighting system.**

## ■ Tires

Make sure that all the tires on your vehicle are inflated to the pressure under towing conditions as shown on the tire placard located on the door pillar on the driver's side.

Trailer tire condition, size, load rating and proper inflation pressure should be in accordance with the trailer manufacturer's specifications.

**⚠ WARNING**

**Never tow a trailer when the temporary spare tire is used. The temporary spare tire is not designed to sustain the towing load. Use of the temporary spare tire when towing can result in failure of the spare tire and/or less stability of the vehicle and may lead to an accident.**

– CONTINUED –

## ■ Trailer towing tips

**⚠ WARNING**

- **Never exceed 80 km/h (50 mph) or legal towing speed limit, whichever is lower. Exceeding the speed limit could cause loss of vehicle stability and/or could lead to an accident.**
- **When towing a trailer, steering, stability, stopping distance and braking performance will be different when compared to normal operation. You should never drive at excessive speeds but always employ extra caution when towing a trailer. You should also keep the following tips in mind.**

**⚠ CAUTION**

- **For models equipped with the SRVD (Subaru Vehicle Detection) system:**

  **Press the SRVD OFF switch to deactivate the system when towing a trailer. However, the system may not operate properly due to the blocked radar waves. For details about the SRVD OFF switch, refer to "SRVD OFF switch" ☞7-60.**
- **For models equipped with the RAB (Reverse Automatic Braking) system:**

  **We recommend that you consult your SUBARU dealer to deactivate the system when towing a trailer.**

### ▼ Before starting out on a trip

- Be sure to check regulations concerning the maximum speed or driving restrictions for vehicles towing trailers. If you are driving across several countries, check each country's requirement before leaving home, because regulations may vary.
- Check that the vehicle and vehicle-to-hitch mounting are in good condition. If any problems are apparent, do not tow the trailer.
- Check that the vehicle rests horizontally with the trailer attached. If the vehicle is tipped sharply up at the front and down at the rear, check the drawbar weight and the weight on the rear axle do not exceed the maximum permissible rear axle weight.
- Check that the tire pressures are correct.
- Check that the vehicle and trailer are connected properly. Confirm that:
  - the trailer tongue is connected properly to the hitch ball.
  - the trailer lights connector is connected properly and trailer's brake lights illuminate when the vehicle's brake pedal is depressed, and that the trailer's turn signal lights flash when the vehicle's turn signal lever is operated.
  - the safety chains are connected properly.
  - all cargo in the trailer is secured safely in position.
  - the outside mirrors provide a good rearward field of view without a significant blind spot.

### ▼ Driving with a trailer

- You should allow for considerably more stopping distance when towing a trailer. Avoid sudden braking because it may result in skidding or jackknifing and loss of control.
- Avoid abrupt starts and sudden accelerations.
- Avoid uneven steering, sharp turns and rapid lane changes.
- Slow down before turning. Make a longer than normal turning radius because the trailer wheels will be closer than the vehicle wheels to the inside of the turn. In a

tight turn, the trailer could hit your vehicle.

- Sufficient time should be taken to learn the “feel” of the vehicle/trailer combination before starting out on a trip. In an area free of traffic, practice turning, stopping and backing up.
- Crosswinds will adversely affect the handling of your vehicle and trailer, causing sway. Crosswinds can be due to weather conditions or the passing of large trucks or buses. If swaying occurs, firmly grip the steering wheel and promptly begin decelerating your vehicle at a gradual pace.
- When passing other vehicles, considerable distance is required because of the added weight and length caused by attaching the trailer to your vehicle.
- Reversing with a trailer can be difficult and takes practice. When reversing with a trailer, never accelerate or steer rapidly. When reversing with a trailer, grip the bottom of the steering wheel with one hand.

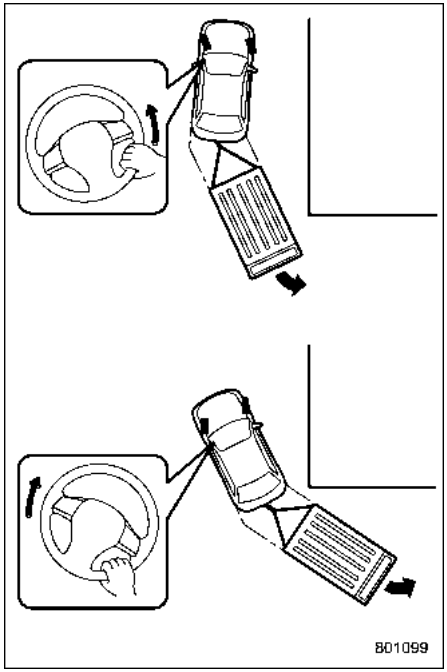


To reversing around a corner, perform the following procedure.

1. Start reversing slowly, steering the opposite way to the way you want to turn.
2. Once the trailer begins to swing round, start to straighten the steering wheel.
3. Straighten the steering of the vehicle and start to steer in the opposite direction in step 1.
4. Steer the vehicle around to be in line with the trailer, then straighten the steering again.

- If the ABS warning light illuminates while the vehicle is in motion, stop towing the trailer. We recommend that you have repairs performed immediately by your nearest SUBARU dealer.

### ▼ Driving on grades

- Before going down a steep hill, slow down and shift into lower gear (if necessary, use 1st gear) in order to utilize the engine braking effect and prevent overheating of your vehicle’s brakes. Do not make sudden downshifts.
- When driving uphill in hot weather, the air conditioner may turn off automatically to protect the engine from overheating.
- When driving uphill in hot weather, pay attention to the following indicators because the engine and transmission are relatively prone to overheating.

: Coolant temperature high warning light

AT OIL TEMP: AT OIL TEMP warning light

If any of the following conditions occur, immediately turn off the air conditioner and stop the vehicle in the nearest safe

– CONTINUED –

location. Refer to “If you park your vehicle in case of an emergency” ☞9-2 and “Engine overheating” ☞9-22.

– “Coolant temperature low indicator light/Coolant temperature high warning light” ☞3-18

– “AT OIL TEMP warning light” ☞3-20

- Avoid using the accelerator pedal to stay stationary on an uphill slope instead of using the parking brake or foot brake. That may cause the transmission fluid to overheat.
- Place the select lever as follows.

Uphill slopes: “D” position

Downhill slopes: A low-speed gear position to use engine braking (models with manual mode)/“L” position (models with “L” position)

### ▼ Parking on a grade

**⚠ CAUTION**

**The braking power of the electronic parking brake may not be sufficient when strong braking power is needed (e.g., when parking on a steep slope while towing a trailer).**

Always block the wheels under both vehicle and trailer when parking. Apply the parking brake firmly. You should not park on a hill or slope. If parking on a hill or slope cannot be avoided, you should take the following steps:

1. Apply the brakes and hold the pedal down.
2. Have someone place wheel blocks under both the vehicle and trailer wheels.
3. When the wheel blocks are in place, release the regular brakes slowly until the blocks absorb the load.
4. Apply the regular brakes and then apply the parking brake; slowly release the regular brakes.
5. Shift into the “P” position and shut off the engine.

## ■ Additional information for Europe

The following information represents the European statutory and regulatory requirements of EEC 1230/2010.

### ▼ Maximum permissible vehicle weight (MPW) and maximum permissible rear axle weight (rear MPAW) for trailer towing

**⚠ WARNING**

**Never exceed the maximum towing weight.**

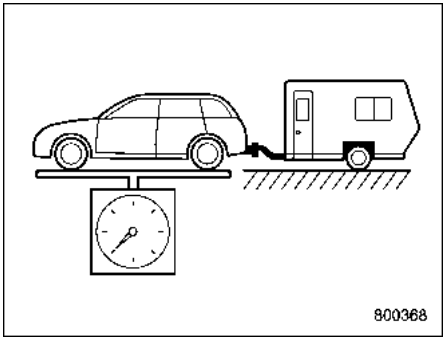


**MPW**

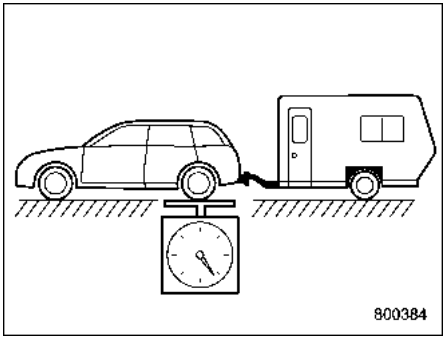


**Rear MPAW**

– CONTINUED –

| Model | MPW at towing (kg) | MPAW at towing (kg) |
|---|---|---|
| 1.6 L | 2,020 | 1,140 |
| 2.0 L | 2,020 | 1,140 |

▼ **The technically permissible maximum mass at the coupling point (ball coupling load)**

80 kg

▼ **Mounting points of the coupling device**

The mounting points of the coupling on the towing vehicle are shown in the diagram.

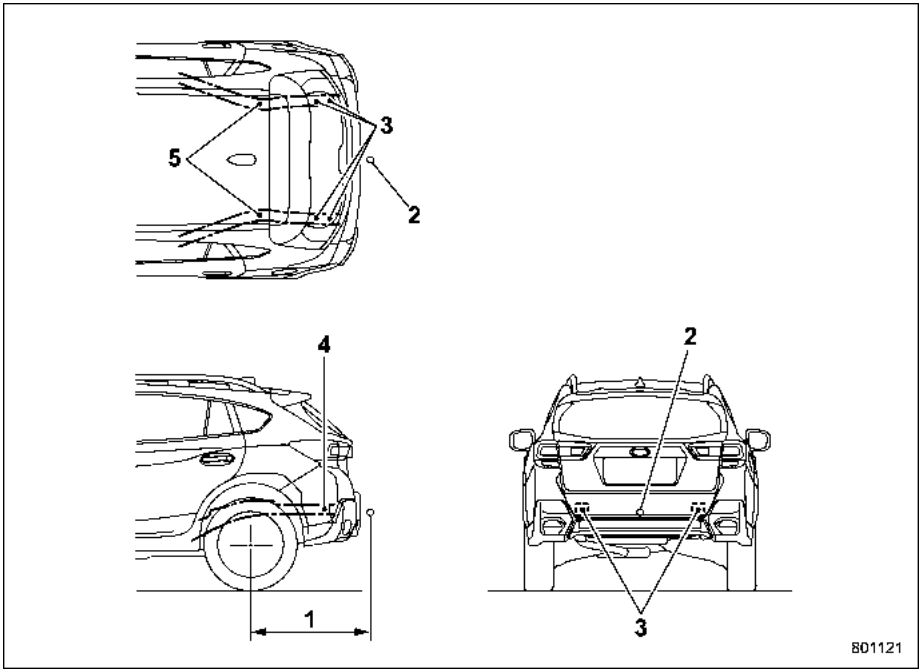


1) Maximum permissible rear overhang for the coupling point: 917 mm (36 in)
2) Coupling
3) Fixing points: Two places underneath the rear frame and three places on the rear end of the rear frame for each side
4) Fixing points: One place on the side of the rear frame for each side
5) Rear frame

If you park your vehicle in case of an emergency ..... 9-2
Temporary spare tire (if equipped) ..... 9-2
Maintenance tools ..... 9-3
Tool bag ..... 9-4
Under the rear floor ..... 9-4
Flat tires ..... 9-5
Changing flat tire ..... 9-5
Sealing flat tire (models with flat tire repair kit) ..... 9-8
Tire pressure monitoring system (TPMS) (if equipped) ..... 9-17
Jump starting ..... 9-18
Battery Precautions! ..... 9-18
Precautions when jump starting! ..... 9-19
How to jump start ..... 9-20
Engine overheating ..... 9-22
If steam is coming from the engine compartment ..... 9-22
If no steam is coming from the engine compartment ..... 9-22
Towing ..... 9-23
Towing hooks and tie-down hooks/holes ..... 9-23
Using a flat-bed truck ..... 9-26
Towing with all wheels on the ground ..... 9-26
Electronic parking brake – if the electronic parking brake cannot be released ..... 9-27
Access key fob – if access key fob does not operate properly ..... 9-27
Locking and unlocking ..... 9-27
Switching power status ..... 9-28
Starting engine ..... 9-28
Rear gate – if the rear gate cannot be opened ..... 9-29
Models with double locking system ..... 9-30
Sunroof (if equipped) – if the sunroof does not close ..... 9-30
If your vehicle is involved in an accident ..... 9-30

## If you park your vehicle in case of an emergency

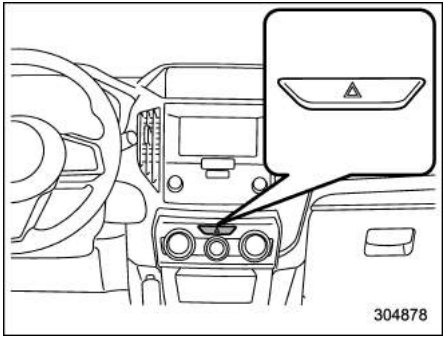


The hazard warning flasher should be used in day or night to warn other drivers when you have to park your vehicle under emergency conditions.

Avoid stopping on the road. It is best to safely pull off the road if a problem occurs.

The hazard warning flasher can be activated regardless of the ignition switch position.

Turn on the hazard warning by pushing the hazard warning flasher switch. Turn it off by pushing the switch again.

### NOTE

**When the hazard warning flasher is on, the turn signals do not work.**

## Temporary spare tire (if equipped)

**WARNING**

- **Never tow a trailer when the temporary spare tire is used. The temporary spare tire is not designed to sustain the towing load. Use of the temporary spare tire when towing can result in failure of the spare tire and/or less stability of the vehicle and may lead to an accident.**
- **When a spare tire is mounted or a wheel rim is replaced without the original pressure sensor/transmitter being transferred, the low tire pressure warning light will illuminate steadily after blinking for approximately one minute. This indicates the tire pressure monitoring system (TPMS) is unable to monitor all four road wheels. We recommend that you contact your SUBARU dealer as soon as possible for tire and sensor replacement and/or system resetting.**

**CAUTION**

**Never use any temporary spare tire other than the original. Using other sizes may result in severe mechanical damage to the drive train of your vehicle.**

The temporary spare tire is smaller and lighter than a conventional tire and is designed for emergency use only. Remove the temporary spare tire and reinstall the conventional tire as soon as possible because the spare tire is designed only for temporary use.

Check the inflation pressure of the temporary spare tire periodically to keep the tire ready for use. For the correct pressure, refer to “Tires” ☞12-9.

When using the temporary spare tire, note the following.

- Drive with caution when the temporary spare tire is installed. Avoid hard acceleration and braking, or fast cornering, as control of the vehicle may be lost.
- Do not exceed 80 km/h (50 mph).
- Do not put a tire chain on the temporary spare tire. Because of the smaller tire size, a tire chain will not fit properly.
- Do not use two or more temporary spare tires at the same time.
- Do not drive over obstacles. This tire has a smaller diameter, so road clearance is reduced.

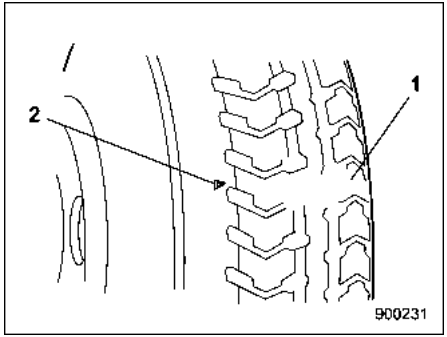


1) Tread wear indicator bar
2) Indicator location mark

- When the wear indicator appears on the tread, replace the tire.
- The temporary spare tire must be used only on a rear wheel. If a front wheel tire gets punctured, replace the wheel with a rear wheel and install the temporary spare tire in place of the removed rear wheel.

## Maintenance tools

Your vehicle is equipped with the following maintenance tools:

- Jack
- Jack handle
- Screwdriver
- Towing hook (eye bolt)
- Wheel nut wrench

### NOTE

**This jack complies with the Machinery Directive 2006/42/EC. A copy of the original Declaration of Conformity is found in chapter 13.**

– CONTINUED –

## ■ Tool bag

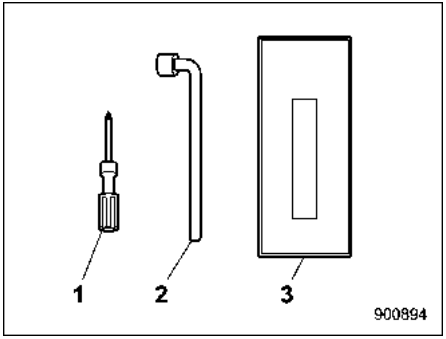


1) Screwdriver
2) Wheel nut wrench
3) Tool bag

The screwdriver and wheel nut wrench are stored in the tool bag. These tools can also be stored in the tool bucket.

## ■ Under the rear floor

The jack, jack handle and towing hook are stored as shown in the following illustrations.

### ▼ Models without flat tire repair kit

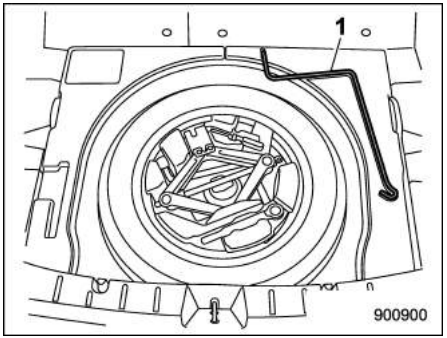


1) Jack handle (type A)

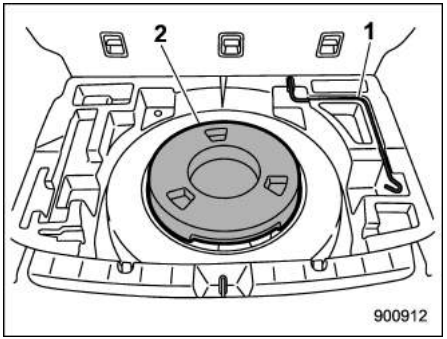


1) Jack handle (type B)
2) Spacer

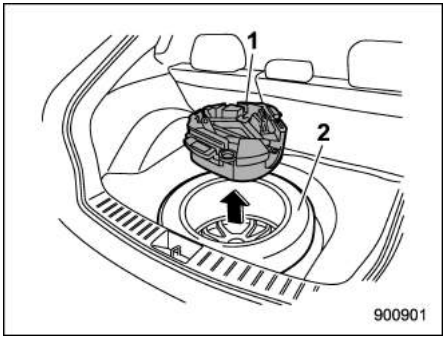


1) Tool bucket
2) Spare tire

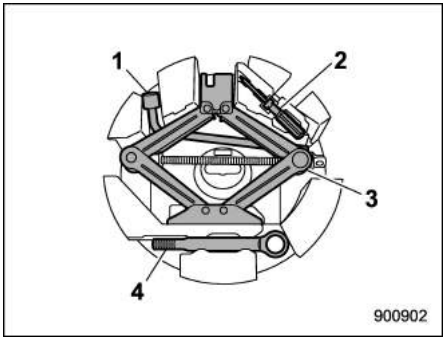


1) Wheel nut wrench
2) Screwdriver
3) Jack
4) Towing hook (eye bolt)

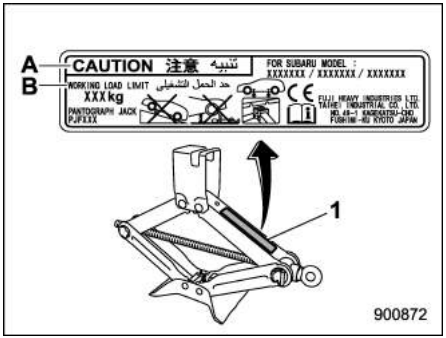


**Example of jack label**
1) Jack label
A) CAUTION
B) WORKING LOAD LIMIT

## NOTE

- **For how to use the jack, refer to "Flat tires" ☞9-5.**
- **The following items may be different depending on the model.**
  - **– The shape of the storage compartment**
  - **– The locations of some maintenance tools**

▼ **Models with flat tire repair kit**

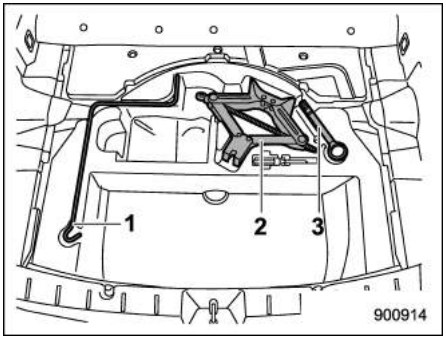


1) Jack handle
2) Jack
3) Towing hook (eye bolt)

# Flat tires

If you have a flat tire while driving, never brake suddenly; keep driving straight ahead while gradually reducing speed. Then slowly pull off the road to a safe place.

## ■ Changing flat tire

▼ **Models with flat tire repair kit**

It may be difficult to change a flat tire. However, it may be possible to seal the tire. For details, refer to "Sealing flat tire (models with flat tire repair kit)" ☞9-8.

▼ **Models without flat tire repair kit**

**⚠ WARNING**

- **Do not jack up the vehicle on an incline or a loose road surface. The jack can come out of the jacking point or sink into the ground and this can result in a serious accident.**
- **Use only the jack provided with your vehicle. The jack supplied with the vehicle is designed only for changing a tire. Never get under the vehicle while supporting the vehicle with this jack.**

*– CONTINUED –*

- **Always turn off the engine before raising the flat tire off the ground using the jack. Never swing or push the vehicle supported with the jack. The jack can come out of the jacking point due to a jolt and this can result in a serious accident.**

▽ **Australia and New Zealand models**

**⚠ WARNING**

**For Australia and New Zealand, the following instructions are supplied by the Australian/New Zealand Standard™ (AS/NZS 2693:2007). Be sure to obey the following instructions for your safety.**

- **That the jack should be used on level firm ground wherever possible.**
- **That it is recommended that the wheels of the vehicle be chocked, and that no person should remain in a vehicle that is being jacked.**
- **That no person should place any portion of their body under a vehicle that is supported by a jack.**

▽ **Procedure**

1. Park on a hard, level surface, whenever possible, then stop the engine.
2. Apply the parking brake securely and shift the select lever into the “P” (Park) position.
3. Turn on the hazard warning flasher and unload all occupants and luggage from the vehicle.

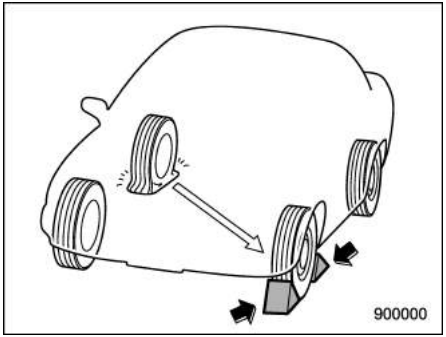


4. Put wheel blocks at the front and rear of the tire diagonally opposite the flat tire.
5. Take out the jack, jack handle and wheel nut wrench.

Refer to “Maintenance tools” ☞9-3.

## NOTE

**Make sure that the jack is well lubricated before using it.**

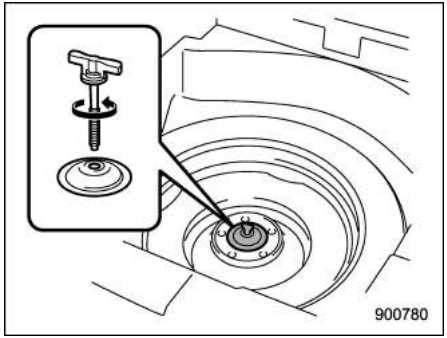


6. Take out the tool bucket and turn the attaching bolt counterclockwise, then take the spare tire out.

## NOTE

**If the spare tire provided in your vehicle is a temporary spare tire, read carefully “Temporary spare tire” ☞9-2 and strictly follow the instructions.**

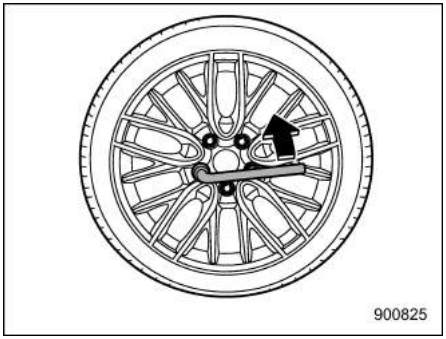


7. Loosen the wheel nuts using the wheel nut wrench but do not remove the nuts.

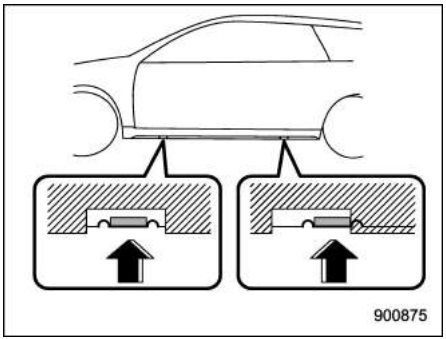


**Jack-up points**

8. Place the jack under the side sill at the front or rear jack-up point closest to the flat tire.

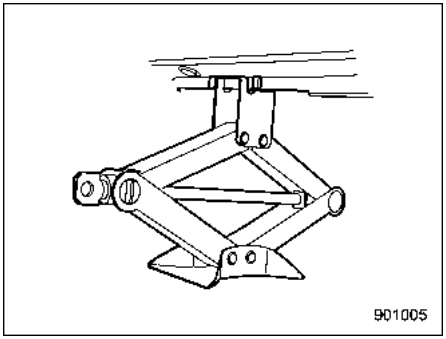


Turn the jackscrew by hand until the jack head engages firmly into the jack-up point.

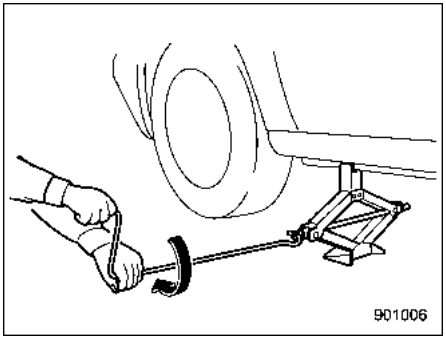


9. Insert the jack handle into the jack-screw, and turn the handle until the tire clears the ground. Do not raise the vehicle higher than necessary.

10. Remove the wheel nuts and the flat tire.

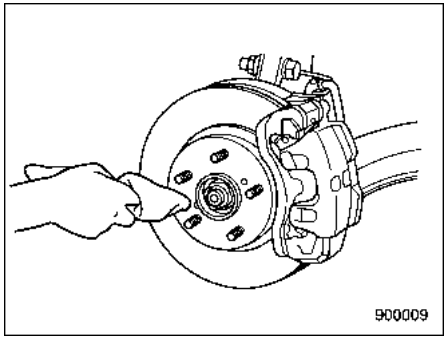


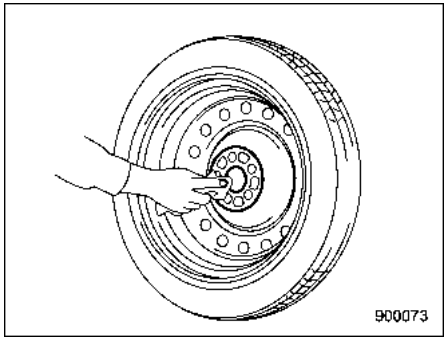


11. Before putting the spare tire on, clean the mounting surface of the wheel and hub with a cloth.

12. Put on the spare tire. Replace the

– CONTINUED –

wheel nuts. Tighten them by hand.

**WARNING**

**Do not use oil or grease on the wheel studs or nuts when the spare tire is installed. This could cause the nuts to become loose and lead to an accident.**

13. Turn the jack handle counterclockwise to lower the vehicle.

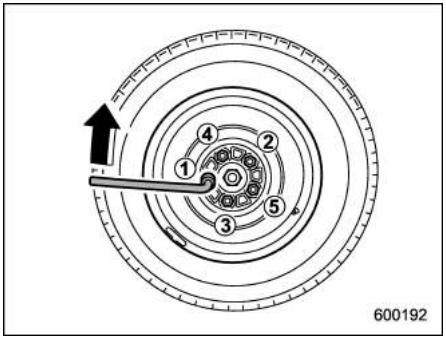


14. Use the wheel nut wrench to securely tighten the wheel nuts to the specified torque, following the tightening order in the illustration.

For the wheel nut tightening torque, refer to “Tires” ☞12-9. Never use your foot on the wheel nut wrench or a pipe extension on the wrench because you may exceed the specified torque. Have the wheel nut torque checked at the nearest automotive service facility.

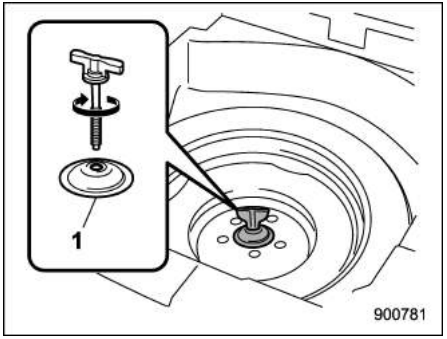


1) Support holder

15. Store the flat tire in the spare tire compartment. Install with the support holder facing upward and secure the flat tire by firmly tightening the attaching bolt.

**NOTE**

**If you cannot fix the flat tire firmly, try turning the support holder upside down.**

16. Store the jack, jack handle and wheel nut wrench in their storage locations.

**WARNING**

**Never place a flat tire or tire changing tools in the passenger compartment after changing a flat tire. In a sudden stop or collisions, loose equipment could strike occupants and cause injury. Store the tire and all tools in the proper place.**

## ■ Sealing flat tire (models with flat tire repair kit)

**WARNING**

**Read these instructions and warnings carefully before sealing a flat tire.**

**Compliance with these instructions is vital to ensuring vehicle safety. Noncompliance with these instructions means risking tire damage, which can affect vehicle handling and lead to loss of vehicle control. This may result in serious injury or death.**

If the tire is punctured, you can seal the flat tire temporarily by using the flat tire repair

kit. You can seal a flat tire caused, for example, by nails or similar objects with less than 4 mm (0.2 in). However, depending on the type and extent of tire damage, some tires can only be partially sealed or not sealed at all, and this condition may cause a loss of tire pressure. A loss of tire pressure can affect vehicle handling, leading to the loss of vehicle control.

After sealing the flat tire temporarily, change the tires with new ones as soon as possible. We recommend that you have the sealed tire changed by your nearest SUBARU dealer. You may reuse the wheel if the attached sealant is wiped off, but the valve of the wheel must be replaced with a new one. If you reuse the wheel without replacing the valve, air may leak from the valve.

For tire replacement, refer to “Tire replacement” ☞11-30.

### ▼ Safety precautions when sealing flat tire

Observe the following rules when sealing a flat tire.

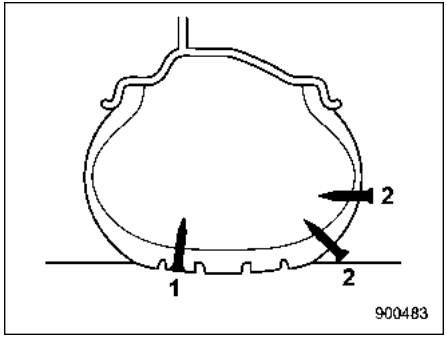


1) Sealing is possible
2) Sealing is not possible

**⚠ WARNING**

- **Do not use the flat tire repair kit in the following cases.**
  - **The tire has already been damaged as a result of being driven in the under inflated condition.**
  - **The tire damage is not located within the visible tread of the tire.**
  - **The tire damage is on the sidewall of the tire.**
  - **When the tire has been taken off of the wheel.**
  - **The wheel or the tire valve of the flat tire is damaged.**
  - **Two or more tires have been punctured.**
  - **The expiration date of the sealant has passed.**
  - **The tire is punctured by pointed items such as nails of 4 mm (0.2 in) or larger.**
- **When inflating the flat tire, if the tire inflation pressure does not reach the green zone of the pressure gauge within 10 minutes, do not continue to seal the tire. We recommend that you contact your SUBARU dealer.**
- **Drive with caution and avoid making sudden steering or driving maneuvers.**
- **Do not exceed a maximum speed of 80 km/h (50 mph).**
- **Do not exceed a maximum driving distance of 200 km (125 miles).**
- **Do not use tire chains on a sealed tire.**

– CONTINUED –

- Do not tow a trailer.
- If used for a purpose other than sealing a flat tire, the flat tire repair kit may cause a severe accident or injury due to the fact that compressed air can act as an explosive or propellant.
- Safely park your vehicle on the roadside so that you do not obstruct the flow of traffic and so that you are able to seal the flat tire without being in danger.
- Apply the parking brake, even if the vehicle is parked on a level road, to make sure that the vehicle will not move.
- Stop the engine before sealing the flat tire.
- Turn on the hazard warning flasher while sealing the flat tire.
- Do not attempt to remove foreign objects like nails or screws that have penetrated the tire. Leave them as they are.
- Never leave the flat tire repair kit unattended while in use.
- Only one tire can be repaired with one bottle of sealant.
- The tires can be repaired when the ambient temperature is −30°C (−22°F) or higher.

**CAUTION**

- Remember that the flat tire repair kit only provides temporary mobility. Regulations concerning tire repair after usage of flat tire repair kit may differ from country to country. We recommend that you consult your SUBARU dealer or tire dealer for advice.
- Store the flat tire repair kit safely and secure it in the cargo area. Storing it anywhere in the passenger compartment is not advisable because it could strike an occupant in the event of a sudden stop or collision and cause injury.
- Use the flat tire repair kit with original vehicle tires only.
- Do not keep the air compressor operating for more than 10 minutes, otherwise there is a risk of overheating.
- The temperature of the air compressor may become high. Be careful not to burn yourself.
- When raining, take measures to prevent the air compressor from being exposed directly to the rain. Exposing to rain may cause a malfunction.
- Do not use air compressors other than the one in the repair kit. Using an air compressor other than the one in the repair kit may damage the tires.
- Do not disassemble or modify the air compressor to enable the use of a power supply or a battery other than DC 12 V.
- If a temporary puncture repair is performed with the repair kit, the Tire Pressure Monitoring System (TPMS) may not operate normally.

### ▼ Location of the flat tire repair kit

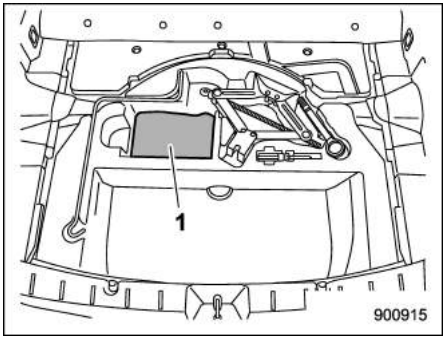


1) Flat tire repair kit

The flat tire repair kit is stored under the floor of the cargo area.

### ▼ Contents of the flat tire repair kit

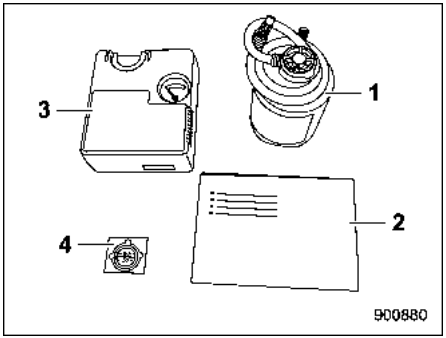


1) Sealant bottle
2) Quick reference guide
3) Air compressor
4) Speed limit label

The above repair kits are packed in a plastic bag. Return them to the plastic bag after use.

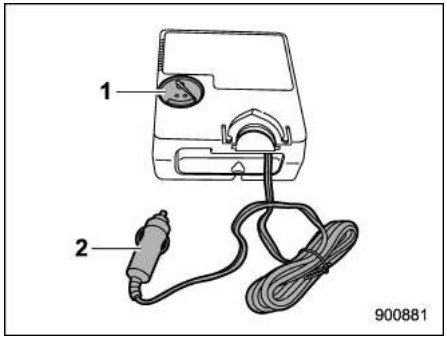


**Air compressor (front side)**
1) Air gauge
2) Power plug

– CONTINUED –

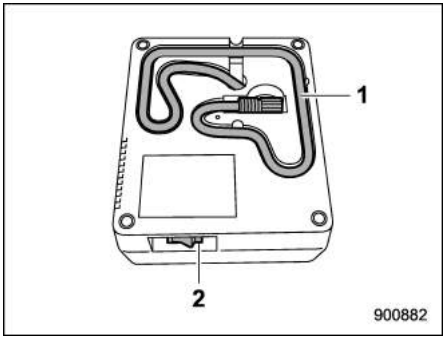


**Air compressor (rear side)**
1) Hose
2) Compressor switch

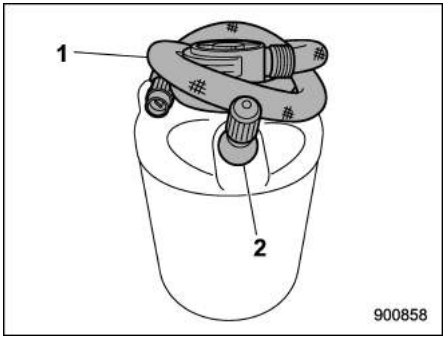


**Sealant bottle**
1) Hose
2) Valve

**WARNING**

- **Do not drink the sealant. If the sealant is accidentally swallowed, seek medical attention immediately.**
- **If the sealant splashes onto your skin or eyes, wash it away immediately with plenty of water. If necessary, seek medical attention immediately.**
- **Keep the flat tire repair kit out of the reach of children.**
- **If a person who is allergic to natural rubber comes in contact the sealant, allergy symptoms may occur.**

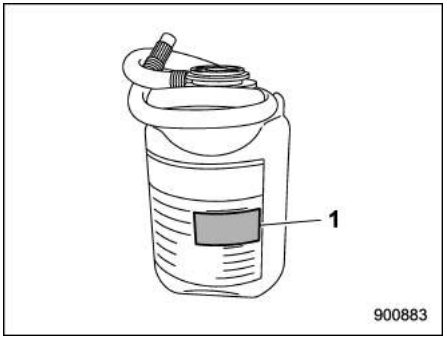


1) Expiration date

**CAUTION**

**Replace the sealant bottle with a new one before the expiration date passes.**

### ▼ How to seal the flat tire

To seal the flat tire, perform the following steps.

- First, pump in the sealant and air. Drive the vehicle for approximately 10 minutes or 5 km (3 miles) so that the sealant can seal the damaged area.
- Stop the vehicle again, check and, if necessary, adjust the pressure of the damaged tire.
- After that, you can continue to drive carefully no faster than 80 km/h (50 mph) and within the maximum distance of 200 km (125 miles).

Inform all other users of the vehicle that the tire has been temporarily sealed with the flat tire repair kit and make them aware of the special driving conditions to be observed.

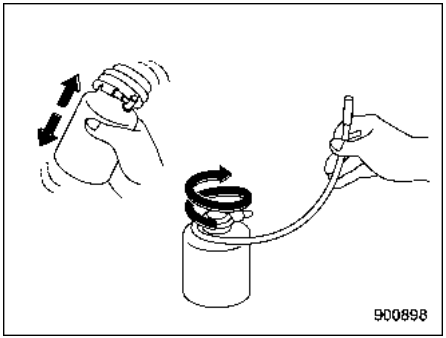


1. Shake the sealant bottle well. Loosen the hose.

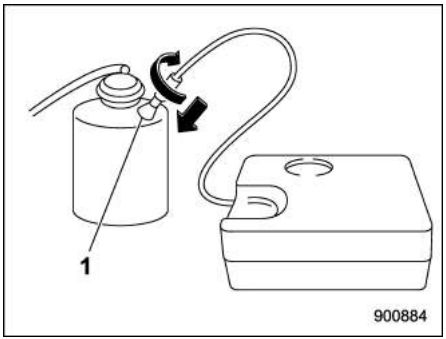


1) Valve

2. Connect the air compressor hose to the valve on the bottle.

**⚠ CAUTION**

- **Make sure that the air compressor switch is OFF.**
- **The sealant may leak if the fitting is not tight enough.**

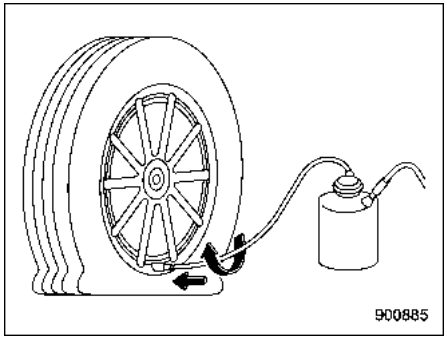


Connect the hose from the bottle to the tire valve stem tightly.

**⚠ CAUTION**

**The sealant may leak if the fitting is not tight enough.**

– CONTINUED –

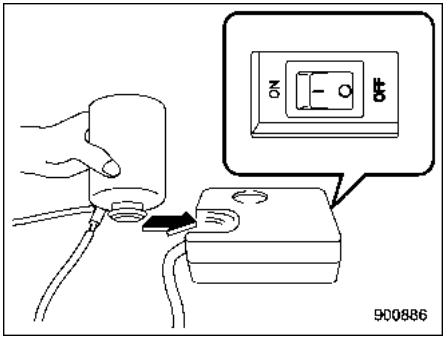


3. Turn the bottle upside down and tilt the bottle cap into the bottle holder of the air compressor.

Make sure that the air compressor switch is OFF.

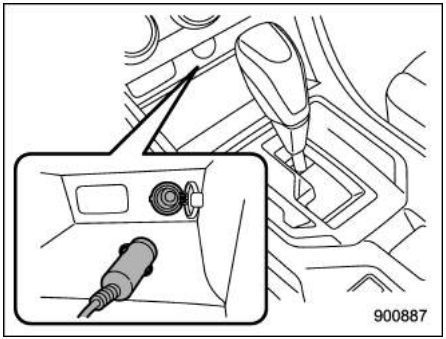


4. Connect the power plug of the air compressor into the accessory power outlet. Apply the parking brake and turn on the ignition switch to the “ACC” position.

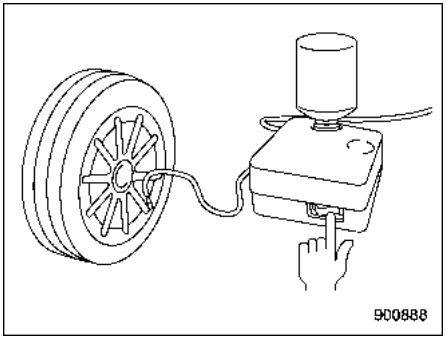


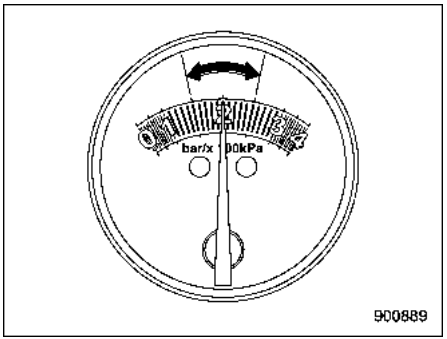


Apply the parking brake and turn on the ignition switch to the “ACC” position. Turn the air compressor switch on and adjust the air pressure to the appropriate level (green zone of the air gauge).

**CAUTION**

- **Do not run the air compressor for more than 10 minutes as it can get hot. Be careful not to get burned.**
- **If tire pressure doesn’t reach the green zone for 10 minutes, this kit will be unable to seal the tire. Please contact your SUBARU dealer for help.**

## NOTE

- **After the compressor starts to operate, the air pressure will temporarily rise to 300 kPa (3.0 kg/cm², 45 psi) or higher. After about 30 seconds when all of the sealant is inside the tire, the air pressure will lower, representing the air pressure in the tire.**
- **In extremely low temperatures −30°C to −20°C (−22°F to −4°F), the viscosity of the sealant increases and the sealant will flow more slowly. In such temperatures, bring the sealant into the vehicle to warm it up before use.**
- **When mending the tire, if the air pressure gauge is hard to read, turn the compressor switch off once to get an**

**accurate reading.**

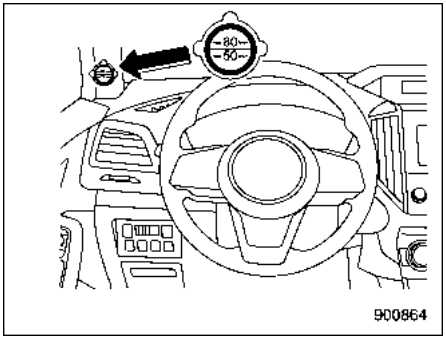


5. While filling the tire with air, attach the speed limit label on the position shown in the illustration.

**WARNING**

**Do not attach the speed limit label in a position where the label hides the warning lamp or on the steering wheel. It may interfere with the normal operation of the airbag and lead to a critical failure.**

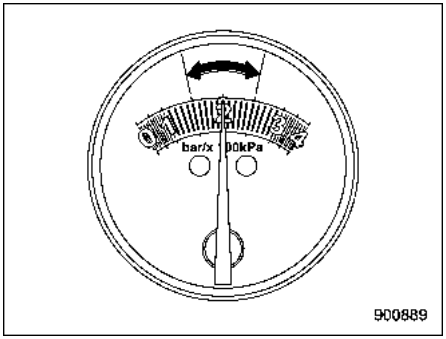


6. Turn the air compressor power switch off when the air pressure reaches the green zone of the air gauge.

Remove the power plug from the accessory power socket.

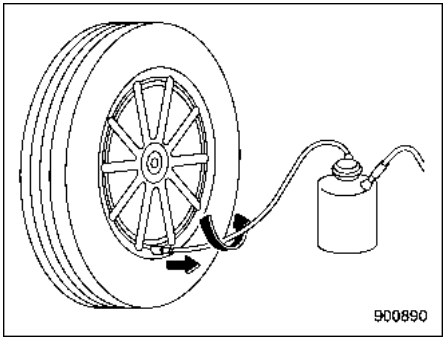


Remove the hose after filling the tire with air and fasten the valve cap.

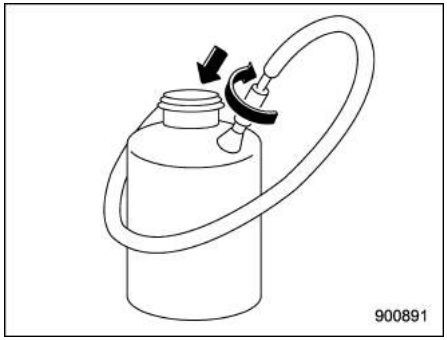


Connect the hose of the bottle to the valve of the bottle in a circular fashion to avoid leakage of the remaining sealant.

**CAUTION**

**The sealant may stain clothing.**

– CONTINUED –

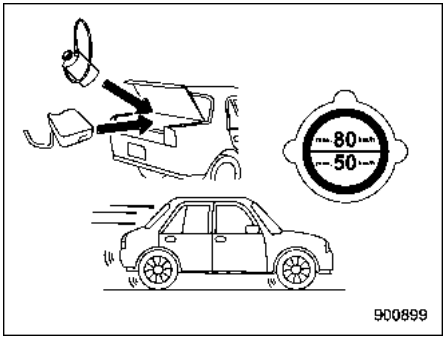


7. Stow the kit back in the vehicle and drive your vehicle immediately for 10 minutes or 5 km (3 miles).

**WARNING**

- **Drive carefully. Do not exceed 80 km/h (50 mph). Driving faster than that can result in the vehicle shaking.**
- **Do not use tire chains on a sealed tire.**
- **Do not tow a trailer.**
- **If heavy vibrations, unsteady steering behavior or noises occur while driving, reduce your speed and drive with caution to a location where it is safe for you to stop the vehicle. Recheck the tire and its pressure. If the tire pressure is in the red zone of the air gauge or if there are any cracks, bumps or similar tire damage visible, temporary repairs cannot be performed with the repair kit. We recommend that you consult with your SUBARU dealer or road service provider.**

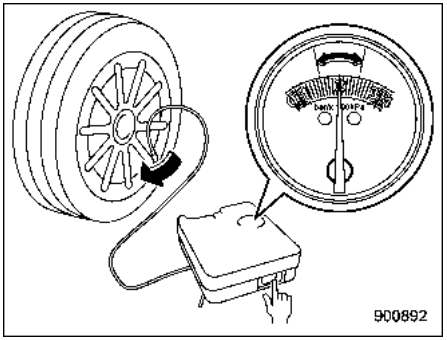


8. After driving for 10 minutes or 5 km (3 miles), whichever comes first, stop the vehicle in a safe place to recheck the air pressure (see step 4).

If necessary, fill the tire with air to the appropriate air pressure again and drive carefully to the nearest SUBARU dealer for tire, valve stem and sealant bottle replacement.

## NOTE

**Connect the air compressor only to the tire valve.**

**CAUTION**

- **If the air pressure is in red zone of the air gauge, the kit did not successfully seal the puncture. In this case, please stop driving and contact your SUBARU dealer for help.**
- **Do not drive your vehicle with the sealed tire for more than 200 km (125 miles). Failure to replace the valve stem may result in air leakage at the valve stem.**

Before the tire is removed from the rim, inform your SUBARU dealer or other tire dealer that the tire contains sealant.

**CAUTION**

**The sealant bottle and speed limit label need to be replaced after using the flat tire repair kit.**

## NOTE

**New sealant and replacement parts can be purchased from your authorized repair shop or SUBARU dealer, and they should also be installed into the kit by a specialist. Empty sealant bottles and replacement parts must be returned to your SUBARU dealer or disposed of in compliance with local waste disposal regulations.**

### ▼ Technical data of air compressor

| | |
|---|---|
| Line voltage | DC 12 V |
| Operating voltage | DC 10 – 15 V |
| Amperage | Max. 10 A |

## ■ Tire pressure monitoring system (TPMS) (if equipped)

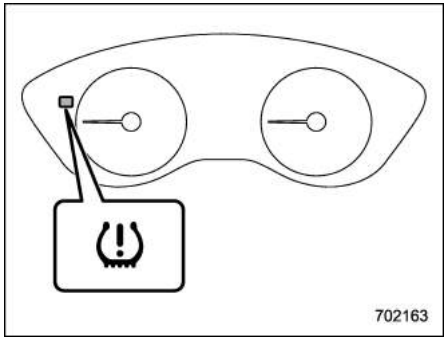


**Low tire pressure warning light**

The tire pressure monitoring system provides the driver with a warning message by sending a signal from a sensor that is installed in each wheel when a tire pressure is severely low relative to the selected TPMS mode. Refer to “Low tire pressure warning light” ☞3-20.

The tire pressure monitoring system will activate only when the vehicle is driven at speeds above 40 km/h (25 mph). Also, this system may not react immediately to a sudden drop in tire pressure (for example, a blow-out caused by running over a sharp object).

**WARNING**

**If the low tire pressure warning light illuminates while driving, never brake suddenly and keep driving straight ahead while gradually reducing speed. Then slowly pull off the road to a safe place. Otherwise an accident involving serious vehicle damage and serious personal injury could occur.**

**Check the pressure for all four tires and adjust the pressure according to the most appropriate one of three (normal, loading, towing) COLD tire pressure values shown on the tire placard located on the door pillar on the driver’s side. If this light still illuminates while driving after adjusting the tire pressure, a tire may have significant damage and a fast leak that causes the tire to lose air rapidly. If you have a flat tire, replace it with a spare tire as soon as possible.**

**When a spare tire is mounted or a wheel rim is replaced without the original pressure sensor/transmitter being transferred, the low tire pressure warning light will illuminate steadily after blinking for approximately one minute. This indicates**

– CONTINUED –

**the TPMS is unable to monitor all four road wheels. We recommend that you contact your SUBARU dealer as soon as possible for tire and sensor replacement and/or system resetting.**

**When a tire is repaired with liquid sealant, the tire pressure warning valve and transmitter may not operate properly. If a liquid sealant is used, we recommend that you contact your nearest SUBARU dealer or other qualified service shop as soon as possible. Make sure to replace the tire pressure warning valve and transmitter when replacing the tire. You may reuse the wheel if there is no damage to it and if the sealant residue is properly cleaned off.**

**If the light illuminates steadily after blinking for approximately one minute, we recommend that you promptly contact a SUBARU dealer to have the system inspected.**

▼ **TPMS screen (type B combination meter) (if equipped)**

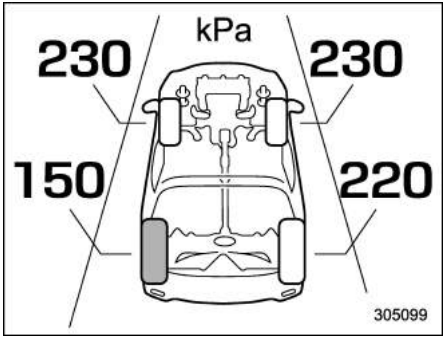


This screen displays each tire pressure. Refer to “Basic screens” ☞3-40.

## Jump starting

### ■ Battery Precautions!

**⚠ WARNING**

**Read these instructions carefully:**

**To ensure safe and correct handling of your battery, read the following precautions carefully before using the battery or inspecting it.**

**Wear eye protection:**

**Always wear eye protection when working near your vehicle’s battery. Battery fluid contains sulfuric acid, so it can cause blindness if splashed into your eyes. Also, batteries emit highly flammable, explosive hydrogen gas. Eye protection is vital for protection in the event that this gas ignites.**

**Battery fluid contains sulfuric acid:**

**Since battery fluid contains sulfuric acid, be sure to wear eye protection**

and protective gloves when inspecting your vehicle's battery. Avoid tipping the battery and subjecting it to shocks since this could cause fluid to spill.

Under no circumstances allow battery fluid to make contact with your skin, eyes, or clothing since this can cause blindness and burns. If battery fluid splashes onto your skin, eyes or clothing, wash it away immediately with plenty of water. If battery fluid splashes into your eyes, seek medical attention immediately.

If battery fluid is accidentally swallowed, immediately drink a large amount of milk or water, and seek medical attention immediately.

Battery fluid is corrosive. If it splashes onto your vehicle's paintwork or fabrics, wash it away immediately with plenty of water.

Keep children away:

Batteries must be handled only by persons who are aware of the potential hazards. Take particular care to keep children away from your vehicle's battery. Improper handling can cause blindness and burns.

Keep flames away:

Before working on or near your vehicle's battery, extinguish all cigarettes, matches, and lighters. Also, keep the battery away from flammable items and electrical sparks. Since batteries emit highly flammable, explosive hydrogen gas, any flames or sparks in the vicinity could cause an explosion.

When working near your vehicle's battery, take care that metal tools do not short-circuit the battery's (+) and (−) terminals or connect the battery's (+) terminal to the vehicle's body. A short circuit could create electrical sparks and lead to an explosion.

To prevent electrical sparks, all rings, wristwatches, and other metal accessories must be taken off before work is carried out on or near the battery.

Prevent explosions:

While being charged, batteries emit highly flammable, explosive hydrogen gas. To prevent an explosion, charge your vehicle's battery in a well ventilated area and keep flames away.

## Precautions when jump starting!

**WARNING**

- Never attempt jump starting if the discharged battery is frozen. It could cause the battery to burst or explode.
- Be sure the jumper cables and clamps on them do not have loose or missing insulation.

  Do not jump start unless cables in suitable condition are available.
- A running engine can be dangerous. Keep your fingers, hands, clothing, hair and tools away from the cooling fan, belts and any other moving engine parts. Removing rings, watches and ties is advisable.

– CONTINUED –

- **Jump starting is dangerous if it done incorrectly. If you are unsure about the proper procedure for jump starting, consult a competent mechanic.**

**CAUTION**

**The battery used for boosting must be 12 V. Do not jump start unless you are sure that the booster battery is correct.**

When your vehicle does not start due to a run down (discharged) battery, the vehicle may be jump started by connecting your battery to another battery (called the booster battery) with jumper cables.

## ■ How to jump start

1. Make sure the booster battery is 12 volts and the negative terminal is grounded.
2. If the booster battery is in another vehicle, do not let the two vehicles touch.
3. Turn off all unnecessary lights and accessories.
4. Connect the jumper cables exactly in the sequence illustrated.

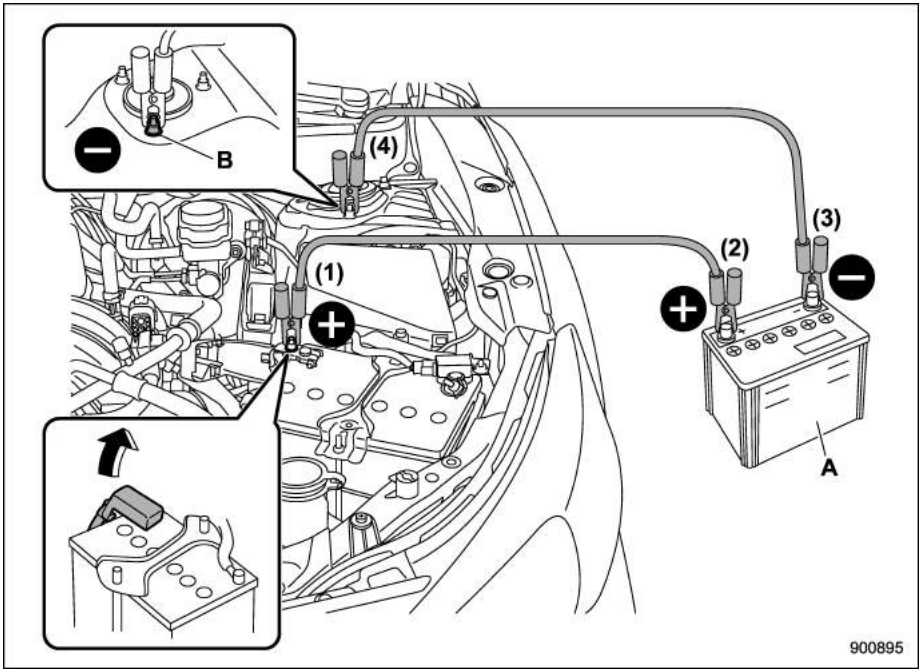


A) Booster battery
B) Strut mounting nut

(1) Connect one jumper cable to the positive (+) terminal on the discharged battery.

(2) Connect the other end of the jumper cable to the positive (+) terminal of the booster battery.

(3) Connect one end of the other cable to the negative (−) terminal of the booster battery.

(4) Connect the other end of the cable to the strut mounting nut.

Make sure that the cables are not near any moving parts and that the cable clamps are not in contact with any other metal.

5. Start the engine of the vehicle with the booster battery and run it at moderate speed. Then start the engine of the vehicle that has the discharged battery.

6. When finished, carefully disconnect the cables in exactly the reverse order.

## Engine overheating

**WARNING**

**Never attempt to remove the radiator cap until the engine has been shut off and has fully cooled down. When the engine is hot, the coolant is under pressure. Removing the cap while the engine is still hot could release a spray of boiling hot coolant, which could burn you very seriously.**

If the engine overheats, safely pull off the road and stop the vehicle in a safe location.

### ■ If steam is coming from the engine compartment

- Turn off the engine and get everyone away from the vehicle until it cools down.
- We recommend that you contact an authorized SUBARU dealer.

### ■ If no steam is coming from the engine compartment

1. Keep the engine running at idling speed.
2. Open the engine hood to ventilate the engine compartment. Refer to “Engine hood” ☞11-11.

Confirm that the cooling fan is turning. If the fan is not turning, immediately turn off the engine and contact your authorized dealer for repair.

3. After the coolant temperature high warning light that has blinked or illuminated in **RED** turns off, turn off the engine. For details about the warning light, refer to “Coolant temperature low indicator light/ Coolant temperature high warning light” ☞3-18.
4. After the engine has fully cooled down, check the coolant level in the reserve tank. If the coolant level is below the “LOW” mark, add coolant up to the “FULL” mark.

**NOTE**

**For details about how to check the coolant level or how to add coolant, refer to “Engine coolant” ☞11-17.**

5. If there is no coolant in the reserve tank, add coolant to the reserve tank. Then remove the radiator cap and fill the radiator with coolant.

If you remove the radiator cap from a hot radiator, first wrap a thick cloth around the radiator cap, then turn the cap counter-clockwise slowly without pressing down until it stops. Release the pressure from the radiator. After the pressure has been fully released, remove the cap by pressing down and turning it.

## Towing

If towing is necessary, it is best done by your SUBARU dealer or a commercial towing service. Observe the following procedures for safety.

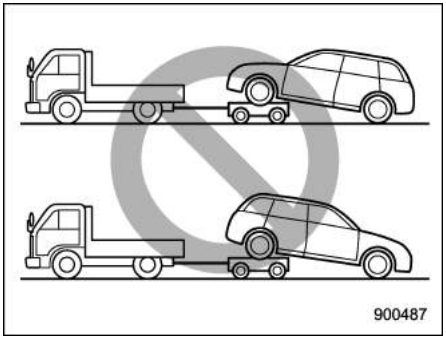


**WARNING**

**Never tow AWD models with the front wheels raised off the ground while the rear wheels are on the ground, or with the rear wheels raised off the ground while the front wheels are on the ground. This will cause the vehicle to spin away due to the operation or deterioration of the center differential.**

## ■ Towing hooks and tie-down hooks/holes

The towing hook should be used only in an emergency.

**CAUTION**

**Use only the specified towing hooks and tie-down hooks/holes. Never use suspension parts or other parts of the body for towing or tie-down purposes.**

### ▼ Front towing hook

1. Take out the towing hook, screwdriver and jack handle. For the locations of these tools, refer to “Maintenance tools” ☞9-3.

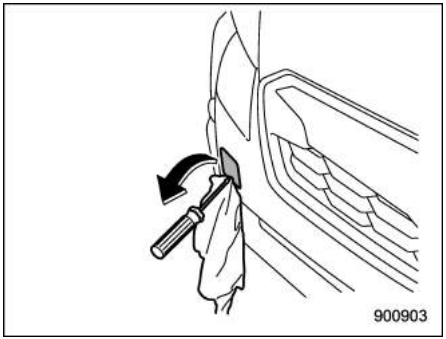


2. Cover the tip of a flat-head screwdriver with vinyl tape or cloth so that it will not scratch the bumper. Insert the flat-head screwdriver into the cutout of the cover and pry open the cover.

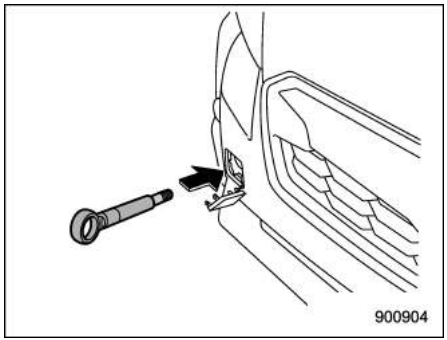


3. Screw the towing hook into the thread hole until its thread can no longer be seen.

– CONTINUED –

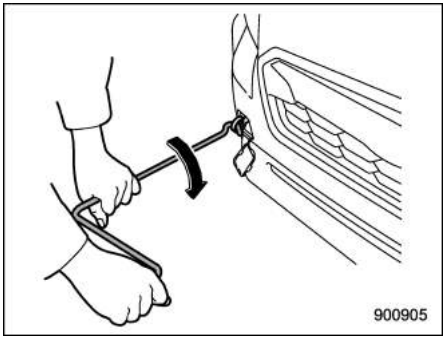


4. Tighten the towing hook securely using the jack handle.

After towing, remove the towing hook from the vehicle and return it to its storage position.
Fit the towing hook cover on the bumper.

**⚠ WARNING**

- **Do not use the towing hook except when towing your vehicle.**
- **Be sure to remove the towing hook after towing. Leaving the towing hook mounted on the vehicle could interfere with proper operation of the SRS airbag system in a frontal collision.**

**⚠ CAUTION**

**To prevent deformation to the front bumper and the towing hook, do not apply excessive load to the towing hooks.**

### ▼ Rear towing hook

1. Take out the towing hook, screwdriver and jack handle. For the locations of these tools, refer to “Maintenance tools” ☞9-3.

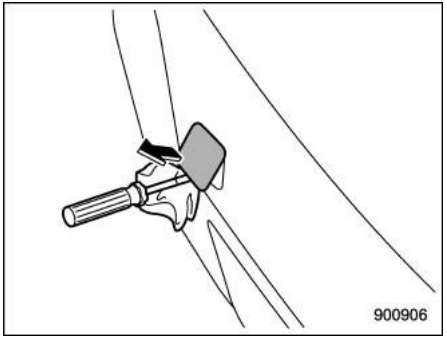


2. Cover the tip of a flat-head screwdriver with vinyl tape or cloth so that it will not scratch the bumper. Pry off the cover on the rear bumper using a screwdriver, and you will find a threaded hole for attaching the towing hook.

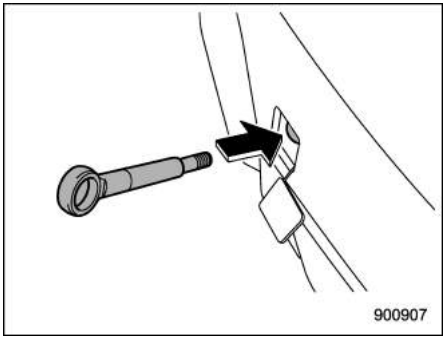


3. Screw the towing hook into the threaded hole until its thread can no longer be seen.

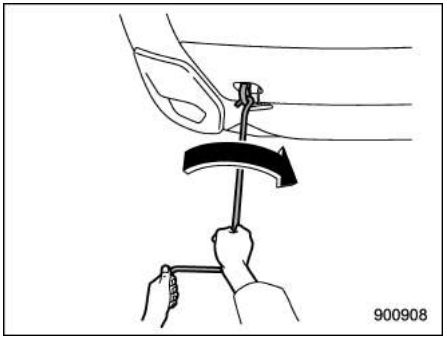


4. Tighten the towing hook securely using the jack handle.

After towing, remove the towing hook from the vehicle and return it to its storage position.

Fit the towing hook cover on the bumper.

**WARNING**

- **Do not use the towing hook except when towing your vehicle.**
- **Be sure to remove the towing hook after towing. Leaving the towing hook mounted on the vehicle could interfere with proper operation of the fuel pump shut off function when the vehicle is struck from behind.**

**CAUTION**

**To prevent deformation to the front bumper and the towing hook, do not apply excessive load to the towing hooks.**

### ▼ Front tie-down hooks

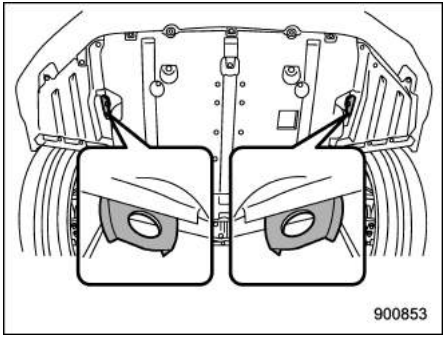


The front tie-down hooks are located between each of the front tires and the front bumper.

### ▼ Rear tie-down holes

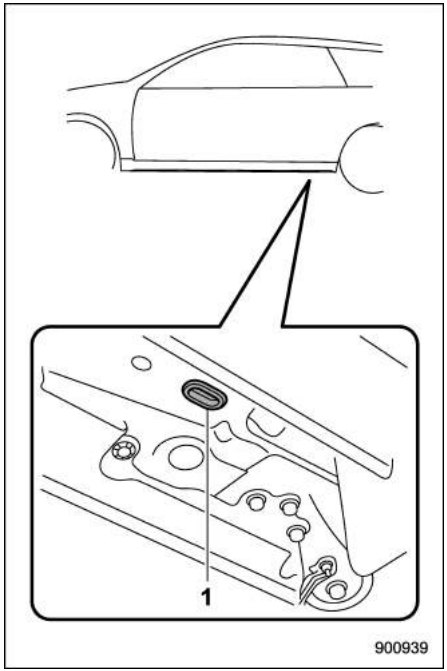


1) Rear tie-down hole

The rear tie-down holes are located near each of the jack-up reinforcements.

There is a plug in each rear tie-down hole. To use the rear tie-down holes, remove the

– CONTINUED –

plugs. After using the rear tie-down holes, return the plugs to their original places.

**WARNING**

**Use the rear tie-down holes only for downward anchoring. If they are used to anchor the vehicle in any other direction, cables may slip out of the holes, possibly causing a dangerous situation.**

## ■ Using a flat-bed truck

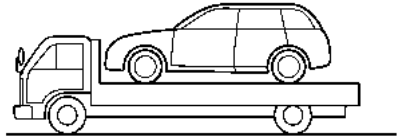


This is the best way to transport your vehicle. Use the following procedures to ensure safe transportation.

1. Shift the select lever into the “P” position.
2. Apply the parking brake firmly.
3. Secure the vehicle onto the carrier properly with safety chains. Each of safety chain should be equally tightened and care must be taken not to pull the chains so tightly that the suspension bottoms out.

## ■ Towing with all wheels on the ground

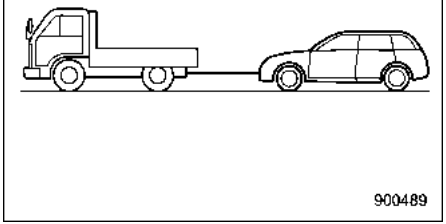


1. Release the parking brake and put the transmission in neutral.
2. The ignition switch should be in the “ON” position while the vehicle is being towed.
3. Take up slack in the towline slowly to prevent damage to the vehicle.

**WARNING**

- **Never turn the ignition switch to the “LOCK”/“OFF” position while the vehicle is being towed because the steering wheel and the direction of the wheels will be locked.**
- **Remember that the brake booster and power steering do not function when the engine is not running. Because the engine is turned off, it will take greater effort to operate the brake pedal and steering wheel.**

**CAUTION**

- **If transmission failure occurs, transport your vehicle on a flat-bed truck.**
- **The traveling speed must be limited to less than 30 km/h (19 mph) and the traveling distance to less than 50 km (31 miles). For greater speeds and distances, transport your vehicle on a flat-bed truck.**

## Electronic parking brake – if the electronic parking brake cannot be released

We recommend that you contact your SUBARU dealer and have your SUBARU dealer release the electronic parking brake.

## Access key fob – if access key fob does not operate properly

**CAUTION**

**Keep metallic objects, magnetic sources and signal transmitters away from between the access key fob and the push-button ignition switch. They may interfere with the communication between the access key fob and the push-button ignition switch.**

If the locking/unlocking procedures, power switch procedures or engine start procedures cannot be operated because of strong radio noise in the surrounding area or low battery of the access key fob, perform the following procedure. When the battery of the access key fob is discharged, replace it with a new one. Refer to “Replacing battery of access key fob” ☞11-53.

### ■ Locking and unlocking

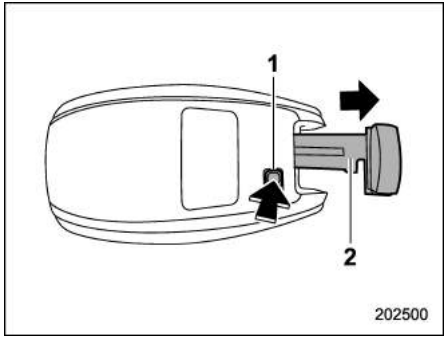


1) Release button
2) Emergency key

While pressing the release button of the access key fob, take out the emergency key.

Lock or unlock the driver’s door with the emergency key in the procedure described in “Locking and unlocking from the outside” ☞2-18.

**NOTE**

**After locking or unlocking, be sure to attach the emergency key back to the access key fob.**

– CONTINUED –

## ■ Switching power status

1. Apply the parking brake.
2. Shift the select lever into the “P” position.
3. Depress the brake pedal.

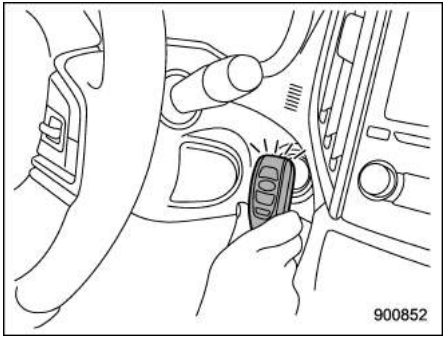


4. Hold the access key fob with the buttons facing you, and touch the push-button ignition switch with it.

When the communication between the access key fob and the vehicle is completed, a chime (ding) will sound, and the operation indicator on the push-button ignition switch illuminates in green. At the same time, the status of the push-button ignition switch changes to either of the following.

- When the keyless access with push-button start system is deactivated: “ACC”
- Under other conditions: “ON”

5. When the keyless access with push-button start system is deactivated, press the push-button ignition switch with the brake pedal released. The status of the push-button ignition switch then changes to “ON”.

### NOTE

**If the power does not switch even though the above procedure was followed precisely, we recommend that you contact your SUBARU dealer.**

## ■ Starting engine

1. Apply the parking brake.
2. Shift the select lever into the “P” position.
3. Depress the brake pedal.

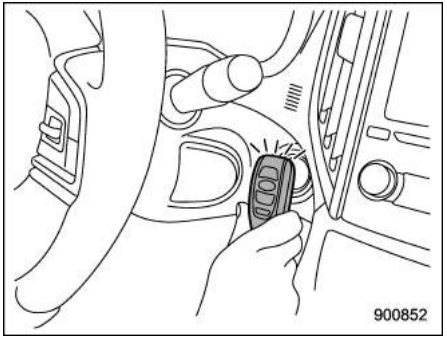


4. Hold the access key fob with the buttons facing you, and touch the push-button ignition switch with it.

When the communication between the access key fob and the vehicle is completed, a chime (ding) will sound, and the operation indicator on the push-button ignition switch illuminates in green. At the same time, the push-button ignition switch turns to the “ACC” or “ON” position.

5. Within 5 seconds after the operation indicator illuminates in green, while depressing the brake pedal, press the push-

button ignition switch.

## NOTE

**If the engine does not start even though the above procedure was followed precisely, we recommend that you contact your SUBARU dealer.**

## Rear gate – if the rear gate cannot be opened

In the event that you cannot open the rear gate by operating the rear gate opener button, you can open it from inside the cargo area.

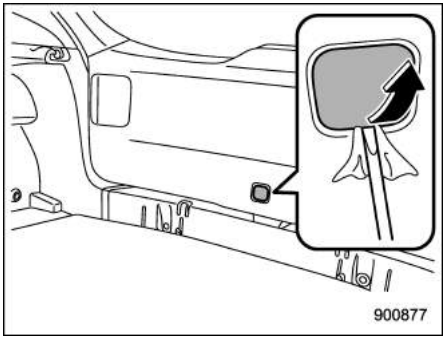


1. Remove the access cover at the bottom-center of the rear gate trim using a flat-head screwdriver wrapped with vinyl tape or cloth.
2. Locate the rear gate open lever behind the rear gate trim panel.

**CAUTION**

**Never operate the rear gate open lever with your fingers because doing so may cause an injury. Always use a flat-head screwdriver or a similar tool.**

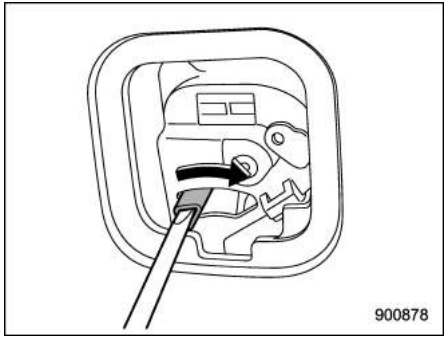


3. To open the rear gate, turn the lever to the right position using a flat-head screwdriver or a similar tool.

– CONTINUED –

### ■ Models with double locking system

**NOTE**

**The rear gate open lever is still shielded with an anti-theft cover even after removing the access cover. So, remove the anti-theft cover using a Phillips screwdriver to access the rear gate open lever.**

## Sunroof (if equipped) – if the sunroof does not close

If the sunroof does not close, we recommend that you have the system checked by a SUBARU dealer.

## If your vehicle is involved in an accident

**CAUTION**

**If your vehicle is involved in an accident, be sure to inspect the ground under the vehicle before restarting the engine. If you find that fuel has leaked on the ground, do not try to restart the engine. The fuel system has been damaged and is in need of repair. Immediately contact the nearest automotive service facility. We recommend that you consult your SUBARU dealer.**

Your vehicle has a fuel pump shut off system. When the vehicle sustains an impact in an accident, rollover (Russia models) etc., the fuel pump shut off system stops supplying the fuel in order to minimize fuel leakage. However, depending on the impact conditions at the time of collision, the fuel pump shut-off system may not operate.

Perform the following procedures to restart the engine after the system is activated.

**Models without “keyless access with push-button start system”:**

1. Turn the ignition switch to the “LOCK” or “ACC” position.
2. Restart the engine.

**Models with “keyless access with push-button start system”:**

1. Turn the push-button ignition switch to the “ACC” or “OFF” position.
2. Restart the engine.

Exterior care ..... 10-2
Washing ..... 10-2
Waxing and polishing ..... 10-3
Cleaning alloy wheels ..... 10-4
Corrosion protection ..... 10-4
Most common causes of corrosion ..... 10-4
To help prevent corrosion ..... 10-5
Cleaning the interior ..... 10-5
Seat fabric ..... 10-6
Leather seat materials ..... 10-6
Synthetic leather upholstery ..... 10-6
Seatbelt ..... 10-7
Climate control panel, audio panel, instrument panel, console panel, switches, combination meter, and other plastic surfaces ..... 10-7
Monitor ..... 10-7

# Exterior care

## ■ Washing

**⚠ CAUTION**

- **When washing the vehicle, the brakes may get wet. As a result, the brake stopping distance will be longer. To dry the brakes, drive the vehicle at a safe speed while lightly depressing the brake pedal to heat up the brakes.**
- **Do not wash the engine compartment and area adjacent to it. If water enters the engine air intake or electrical parts, it will cause engine trouble or a malfunction of the power steering.**
- **When washing inner fenders, underbody, bumpers and protruding objects such as exhaust pipes and exhaust finishers, be careful to prevent injuries from contacting sharp ends.**
- **Do not use organic solvents when washing the surface of the bulb assembly cover. However, if a detergent with organic solvents is used to wash the cover surface, completely rinse off the detergent with water. Otherwise, the surface may be damaged.**
- **Models with automatic rain sensing windshield wipers: When washing the vehicle, turn off the wiper. If the wiper switch is in the "AUTO" position, the wipers may operate unexpectedly while washing the vehicle and cause injury.**
- **Since your vehicle is equipped with a rear wiper, automatic carwash brushes could become tangled around it, damaging the wiper arm and other components. Ask the automatic carwash operator not to let the brushes touch the wiper arm or to fix the wiper arm on the rear window glass with adhesive tape before operating the machine.**

**NOTE**

**When having your vehicle washed in an automatic car wash:**

- **Make sure beforehand that the car wash is of suitable type.**
- **When washing a vehicle equipped with automatic rain sensing windshield wipers, make sure that the wiper is turned off. If the wiper switch is in the "AUTO" position, the wipers may operate unexpectedly while washing the vehicle and the wiper blades could be damaged.**
- **The rear view camera lens has a hard coating to help prevent scratches. When washing the vehicle or cleaning the camera lens, be careful not to scratch the camera lens. Do not use a washing brush directly on the camera lens. This may cause the image quality of the rear view camera to deteriorate.**

The best way to preserve your vehicle's beauty is frequent washing. Wash the vehicle at least once a month to avoid contamination by road grime.

Wash dirt off with a wet sponge and plenty of lukewarm or cold water. Do not wash the vehicle with hot water and in direct sunlight.

Salt, chemicals, insects, tar, soot, tree sap, and bird droppings should be washed off

by using a light detergent, as required. If you use a light detergent, make certain that it is a neutral detergent. Do not use strong soap or chemical detergents. All cleaning agents should be promptly flushed from the surface and not allowed to dry there. Rinse the vehicle thoroughly with plenty of lukewarm water. Wipe the remaining water off with a chamois or soft cloth. Wear rubber gloves and use a hand brush when washing down underbody, inner fenders and suspension to effectively remove mud and dirt off.

### ▼ Washing the underbody

Chemicals, salts and gravel used for deicing road surfaces are extremely corrosive, accelerating the corrosion of underbody components, such as the exhaust system, fuel and brake lines, brake cables, floor pan and fenders, and suspension.

Thoroughly flush the underbody and inside of the fenders with lukewarm or cold water at frequent intervals to reduce the harmful effects of such agents.

Mud and sand adhering to the underbody components may accelerate their corrosion.

After driving off-road or on muddy or sandy roads, wash the mud and sand off the underbody.

Carefully flush the suspension and axle parts, as they are particularly prone to mud and sand buildup. Do not use a sharp-edged tool to remove caked mud.

**⚠ CAUTION**

- **Be careful not to damage brake hoses, sensor harnesses, and other parts when washing suspension components.**
- **Be careful not to flush the engine bottom for a long time. It may cause damage of some electrical parts.**

### ▼ Using a warm water washer

- Keep a good distance of 30 cm (12 in) or more between the washer nozzle and the vehicle.
- Do not wash the same area continuously.
- If a stain will not come out easily, wash by hand. Some warm water washers are of the high temperature, high pressure type, and they can damage or deform the resin parts such as moldings, or cause water to leak into the vehicle.

## ■ Waxing and polishing

Always wash and dry the vehicle before waxing and polishing.

Use a good quality polish and wax and apply them according to the manufacturer's instructions. Wax or polish when the painted surface is cool.

Be sure to polish and wax the chrome trim, as well as the painted surfaces. Loss of wax on a painted surface leads to loss of the original luster and also quickens the deterioration of the surface. It is recommended that a coat of wax be applied at least once a month, or whenever the surface no longer repels water.

If the appearance of the paint has diminished to the point where the luster or tone cannot be restored, lightly polish the surface with a fine-grained compound. Never polish just the affected area, but include the surrounding area as well. Always polish in only one direction. A No. 2000 grain compound is recommended. Never use a coarse-grained compound. Coarser grained compounds have a smaller grain-size number and could damage the paint. After polishing with a compound, coat with wax to restore the original luster. Frequent polishing with a compound or an incorrect polishing technique will result in removing the paint layer and exposing the under-

– CONTINUED –

coat. When in doubt, we recommend that you always contact your SUBARU dealer or an auto paint specialist.

**⚠ CAUTION**

**Do not use any agents with organic solvents on the surface of the bulb assembly cover. However, if a polish or wax with organic solvents is applied to the cover surface, completely wipe off the polish or wax. Otherwise, the cover surface may be damaged.**

## NOTE

- **Be careful not to block the windshield washer nozzles with wax when waxing the vehicle.**
- **Do not wipe the rear view camera with alcohol, benzine or paint thinner. Otherwise, discoloration may occur. To remove contamination, wipe the camera with a cloth moistened with diluted neutral detergent and then wipe it with a soft, dry cloth.**
- **When waxing the vehicle, be careful not to apply the wax to the rear view camera. If it comes in contact with the camera, moisten a clean cloth with diluted neutral detergent to remove the wax.**

### ■ Cleaning alloy wheels

- Promptly wipe the alloy wheels clean of any kind of grime or agent. If dirt is left on too long, it may be difficult to clean off.
- Do not use soap containing grit to clean the wheels. Be sure to use a neutral cleaning agent, and later rinse thoroughly with water. Do not clean the wheels with a stiff brush or expose them to a high-speed washing device.
- Clean the vehicle (including the alloy wheels) with water as soon as possible when it has been splashed with sea water, exposed to sea breezes, or driven on roads treated with salt or other agents.

## Corrosion protection

Your SUBARU has been designed and built to resist corrosion. Special materials and protective finishes have been used on most parts of the vehicle to help maintain fine appearance, strength, and reliable operation.

### ■ Most common causes of corrosion

The most common causes of corrosion are:

- The accumulation of moisture retaining dirt and debris in body panel sections, cavities, and other areas.
- Damage to paint and other protective coatings caused by gravel and stone chips or minor accidents.

Corrosion is accelerated on the vehicle when:

- It is exposed to road salt or dust control chemicals, or used in coastal areas where there is more salt in the air, or in areas where there is considerable industrial pollution.
- It is driven in areas of high humidity, especially when temperatures range just above freezing.

- Dampness in certain parts of the vehicle remains for a long time, even though other parts of the vehicle may be dry.
- High temperatures will cause corrosion to parts of the vehicle which cannot dry quickly due to lack of proper ventilation.

## ■ To help prevent corrosion

Wash the vehicle regularly to prevent corrosion of the body and suspension components. Also, wash the vehicle promptly after driving on any of the following surfaces:

- roads that have been salted to prevent them from freezing in winter
- mud, sand, or gravel
- coastal roads

After the winter has ended, it is recommended that the underbody be given a very thorough washing.

Before the beginning of winter, check the condition of underbody components, such as the exhaust system, fuel and brake lines, brake cables, suspension, steering system, floor pan, and fenders. If any of them are found to be rusted, they should be given an appropriate rust prevention treatment or should be replaced. We recommend that you contact your SUBARU dealer to perform this kind of maintenance and treatment if you need assistance.

Repair chips and scratches in the paint as soon as you find them.

Check the interior of the vehicle for water and dirt accumulation under the floor mats because that could cause corrosion. Occasionally check under the mats to make sure the area is dry.

Keep your garage dry. Do not park your vehicle in a damp, poorly ventilated garage. In such a garage, corrosion can be caused by dampness. If you wash the vehicle in the garage or put the vehicle into the garage when wet or covered with snow, that can cause dampness.

If your vehicle is operated in cold weather and/or in areas where road salts and other corrosive materials are used, the door hinges and locks and hood latch should be inspected and lubricated periodically.

# Cleaning the interior

Use a soft, damp cloth to clean the climate control panel, audio equipment, instrument panel, center console, combination meter panel, and switches. (Do not use organic solvents.)

**⚠ CAUTION**

**Do not use sharp instruments or window cleaner containing abrasives to clean the inner surface of the rear window. They may damage the conductors printed on the window.**

– CONTINUED –

## ■ Seat fabric

Remove loose dirt, dust or debris with a vacuum cleaner. If the dirt is caked on the fabric or hard to remove with a vacuum cleaner, use a soft brush then vacuum it.

Wipe the fabric surface with a tightly wrung cloth and dry the seat fabric thoroughly. If the fabric is still dirty, wipe using a solution of mild soap and lukewarm water then dry thoroughly.

If the stain does not come out, try a commercially-available fabric cleaner. Use the cleaner on a hidden place and make sure it does not affect the fabric adversely. Use the cleaner according to its instructions.

**⚠ CAUTION**

**When cleaning the seat, do not use benzine, paint thinner, or any similar materials. Doing so could damage the surface and cause the color to deteriorate.**

## ■ Leather seat materials

The leather used by SUBARU is a high quality natural product which will retain its distinctive appearance and feel for many years with proper care.

Allowing dust or road dirt to build up on the surface can cause the material to become brittle and to wear prematurely. Regular cleaning with a soft, moist, natural fiber cloth should be performed monthly, taking care not to soak the leather or allow water to penetrate the stitched seams.

A mild detergent suitable for cleaning woolen fabrics may be used to remove difficult dirt spots, rubbing with a soft, dry cloth afterwards to restore the luster. If your SUBARU is to be parked for a long time in bright sunlight, it is recommended that the seats and head restraints be covered, or the windows shaded, to prevent fading or shrinkage.

Seat covers and head restraint covers should be removed before operating the vehicle.

Minor surface blemishes or bald patches may be treated with a commercial leather spray lacquer. You will discover that each leather seat section will develop soft folds or wrinkles, which is characteristic of genuine leather.

## ■ Synthetic leather upholstery

The synthetic leather material used on the SUBARU may be cleaned using mild soap or detergent and water, after first vacuuming or brushing away loose dirt. Allow the soap to soak in for a few minutes and wipe off with a clean, damp cloth. Commercial foam-type cleaners suitable for synthetic leather materials may be used when necessary.

**⚠ CAUTION**

**Strong cleaning agents such as solvents, paint thinners, window cleaner or fuel must never be used on leather or synthetic interior materials. Doing so could damage the surface and cause the color to deteriorate.**

## ■ Seatbelt

For details about how to clean the seatbelt, refer to “Seatbelt maintenance” ☞1-21.

## ■ Climate control panel, audio panel, instrument panel, console panel, switches, combination meter, and other plastic surfaces

Use a soft, damp cloth to clean the climate control panel, audio equipment, instrument panel, center console, combination meter panel, and switches.

**⚠ CAUTION**

- **Do not use organic solvents such as paint thinners or fuel, or strong cleaning agents that contain those solvents. Doing so could damage the surface and cause the color to deteriorate.**
- **Do not use chemical solvents that contain silicone on the vehicle audio system, electrical components of the air-conditioner or any switches. If silicone adheres to these parts, it may cause damage to electrical components.**

## ■ Monitor

To clean the audio/navigation/multi-function display monitor, wipe it with a silicone cloth or with a soft cloth. If the monitor is extremely dirty, clean it with a soft cloth moistened with neutral detergent then carefully wipe off any remaining detergent.

**⚠ CAUTION**

- **Do not spray neutral detergent directly onto the monitor. Doing so could damage the monitor’s components.**
- **Do not wipe the monitor with a hard cloth. Doing so could scratch the monitor.**
- **Do not use cleaning fluid that contains thinner, fuel, or any other volatile substance. Such cleaning fluid could erase the lettering on the switches at the bottom of the monitor.**

Maintenance schedule ..... 11-3
Maintenance precautions ..... 11-7
Before checking or servicing in the engine compartment ..... 11-8
When checking or servicing in the engine compartment ..... 11-8
When checking or servicing in the engine compartment while the engine is running ..... 11-8
Maintenance tips ..... 11-9
When replacing parts ..... 11-9
Removing and reinstalling clips ..... 11-9
Engine hood ..... 11-11
Engine compartment overview ..... 11-13
Engine oil ..... 11-14
Engine oil consumption ..... 11-14
Checking the oil level ..... 11-14
Changing the oil and oil filter ..... 11-15
Recommended grade and viscosity ..... 11-16
Synthetic oil ..... 11-16
Cooling system ..... 11-16
Cooling fan, hose and connections ..... 11-17
Engine coolant ..... 11-17
Air cleaner element ..... 11-19
Replacing the air cleaner element ..... 11-20
Spark plugs ..... 11-21
Drive belts ..... 11-21
Continuously variable transmission fluid ..... 11-21
Front differential gear oil (all models) and rear differential gear oil (AWD models) ..... 11-22
Recommended grade and viscosity ..... 11-22
Brake fluid ..... 11-22
Checking the fluid level ..... 11-22
Recommended brake fluid ..... 11-23
Brake booster ..... 11-23
Brake pedal ..... 11-23
Checking the brake pedal free play ..... 11-23
Checking the brake pedal reserve distance ..... 11-24
Hill start assist system ..... 11-24
Replacement of brake pad ..... 11-24
Breaking-in of new brake pads ..... 11-25
Tires and wheels ..... 11-25
Types of tires ..... 11-25
Tire pressure monitoring system (TPMS) (if equipped) ..... 11-25
Tire inspection ..... 11-27
Tire pressures and wear ..... 11-27
Wheel balance ..... 11-29
Wear indicators ..... 11-29
Tire rotation direction mark ..... 11-29
Tire rotation ..... 11-30
Tire replacement ..... 11-30
Wheel replacement ..... 11-31
Alloy wheels ..... 11-32
Windshield washer fluid ..... 11-32
Checking the windshield washer fluid level ..... 11-32
Adding the windshield washer fluid ..... 11-32
Windshield washer fluid ..... 11-33
Replacement of wiper blades ..... 11-33
Windshield wiper blade assembly ..... 11-34
Window wiper blade rubber ..... 11-35

Rear window wiper blade assembly ..... 11-36
Rear window wiper blade rubber ..... 11-36
Battery ..... 11-38
Battery Precautions! ..... 11-38
Fuses ..... 11-39
Installation of accessories ..... 11-41
Replacing bulbs ..... 11-41
Headlights (models with LED headlights) ..... 11-41
Headlights (models with halogen headlights)..... 11-42
Front turn signal light (models with LED headlights)..... 11-43
Front turn signal light and position light (models with halogen headlights)..... 11-44
Front fog light (models with LED front fog light)..... 11-45
Front fog light and daytime running light (if equipped)..... 11-45
Side turn signal light (if equipped) ..... 11-47
Rear combination lights..... 11-47
Back-up light..... 11-49
License plate light ..... 11-49
Rear fog light (if equipped) ..... 11-50
Map light ..... 11-51
Vanity mirror light (if equipped)..... 11-51
Dome light and cargo area light ..... 11-51
Other bulbs ..... 11-51
Replacing key battery .....11-52
Safety precautions..... 11-52
Replacing battery of access key fob ..... 11-53
Replacing battery of transmitter..... 11-54

## Maintenance schedule

To keep your vehicle in proper operating condition and to assure peak performance at all times, the recommended maintenance service should be performed in accordance with the maintenance schedule.

### NOTE

- **The frequency of scheduled inspection and maintenance services as set forth is minimal. However, it may be necessary that they be performed more frequently depending on road conditions, weather, atmospheric conditions and vehicle usage. These conditions may differ from one country to another. Therefore there may be special requirement in your country. We recommend that you ask your authorized SUBARU dealer for the actual maintenance schedule applied to your vehicle.**
- **For models with a multi-function display (color LCD), you can set a reminder to be displayed when a scheduled maintenance item is almost due. For details, refer to "Setting screen" ☞3-59.**

Continue periodic maintenance beyond 120,000 km (75,000 miles) or 96 months by returning to the third column of the maintenance schedule and adding 120,000 km (75,000 miles) or 96 months to the column headings.

Symbols used:
**R:** Replace
**I:** Inspect, and then adjust, correct or replace if necessary.
**P:** Perform
**(I):** Recommended service for safe vehicle operation

| MAINTENANCE ITEM | | MAINTENANCE INTERVAL (Number of months or km (miles), whichever occurs first) | | | | | | | | | REMARKS |
|---|---|---|---|---|---|---|---|---|---|---|---|
| | | Months | 12 | 24 | 36 | 48 | 60 | 72 | 84 | 96 | |
| | | × 1,000 km | 15 | 30 | 45 | 60 | 75 | 90 | 105 | 120 | |
| | | × 1,000 miles | 9 | 19 | 28 | 38 | 47 | 56 | 66 | 75 | |
| 1 | Engine oil | | **R** | **R** | **R** | **R** | **R** | **R** | **R** | **R** | See NOTE 1) |
| 2 | Engine oil filter | | **R** | **R** | **R** | **R** | **R** | **R** | **R** | **R** | See NOTE 1) |
| 3 | Drive belt(s) | | **I** | **I** | **I** | **I** | **I** | **I** | **I** | **I** | |

– CONTINUED –

| MAINTENANCE ITEM | | MAINTENANCE INTERVAL (Number of months or km (miles), whichever occurs first) | | | | | | | | | REMARKS |
|---|---|---|---|---|---|---|---|---|---|---|---|
| | | Months | 12 | 24 | 36 | 48 | 60 | 72 | 84 | 96 | |
| | | × 1,000 km | 15 | 30 | 45 | 60 | 75 | 90 | 105 | 120 | |
| | | × 1,000 miles | 9 | 19 | 28 | 38 | 47 | 56 | 66 | 75 | |
| 4 | Cooling system, hoses and connections | | | I | | I | | I | | I | |
| 5 | Replace engine coolant (SUBARU Super Coolant or equivalent) | | 1st replacement: **132 months (11 years)/220,000 km (137,500 miles)** From the 2nd replacement: **72 months (6 years)/120,000 km (75,000 miles)** | | | | | | | | |
| 6 | Fuel system, lines and connections | | | I | | I | | I | | I | See NOTE 2) |
| 7 | Fuel filter | For Europe* | | | | | | | | R | Replace every 120,000 km (75,000 miles) |
| | | Except for Europe | | | | | | R | | | Replace every 90,000 km (56,000 miles) |
| 8 | Air cleaner element | | I | I | R | I | I | R | I | I | Replace every 45,000 km (28,000 miles) |
| 9 | Spark plugs | | | | | | | | R | | Replace every 105,000 km (66,000 miles) |
| 10 | Front differential and rear differential lubricants (gear oil) | | | I | | R | | I | | R | See NOTE 3) |

*: Except for CIS and Israel

| MAINTENANCE ITEM | | MAINTENANCE INTERVAL (Number of months or km (miles), whichever occurs first) | | | | | | | | | REMARKS |
|---|---|---|---|---|---|---|---|---|---|---|---|
| | | Months | 12 | 24 | 36 | 48 | 60 | 72 | 84 | 96 | |
| | | × 1,000 km | 15 | 30 | 45 | 60 | 75 | 90 | 105 | 120 | |
| | | × 1,000 miles | 9 | 19 | 28 | 38 | 47 | 56 | 66 | 75 | |
| 11 | Continuously variable transmission fluid | | | **I** | | **I** | | **I** | | **I** | See NOTE 4) |
| 12 | Brake fluid | | | **R** | | **R** | | **R** | | **R** | See NOTE 5) |
| 13 | Disc brake pads and discs/Front and rear axle boots and axle shaft joint portions | | **I** | **I** | **I** | **I** | **I** | **I** | **I** | **I** | See NOTE 2) |
| 14 | Brake lining and drums (including parking brake linings and drums) | | | **I** | | **I** | | **I** | | **I** | See NOTE 2) |
| 15 | Inspect brake lines and check operation of parking and service brake system | | | **P** | | **P** | | **P** | | **P** | See NOTE 2) |
| 16 | Steering and suspension system | | | **I** | | **I** | | **I** | | **I** | See NOTE 2) |
| 17 | Front and rear wheel bearing | | | | | | | | | **(I)** | |
| 18 | Cabin air filter (except for CIS and Israel) | | **I** | **R** | **I** | **R** | **I** | **R** | **I** | **R** | See NOTE 6) |
| 19 | Cabin air filter (for CIS and Israel) | | Replace every 12 months or 12,000 km (7,500 miles) whichever occurs first | | | | | | | | See NOTE 6) |
| 20 | SUBARU GENUINE FUEL ADDITIVE (In areas where the impurity content in the fuel is high) | | Add a bottle to the fuel tank every 15,000 km (9000 miles) | | | | | | | | See NOTE 7) |

*– CONTINUED –*

## NOTE

**1) When the vehicle is used under severe driving conditions mentioned in the following examples*, the engine oil and oil filter should be changed more frequently.**
**2) When the vehicle is used under severe driving conditions mentioned in the following examples*, inspection should be performed at every 15,000 km (9,000 miles) or 12 months whichever occurs first.**
**3) When the vehicle is frequently operated under severe driving conditions, such as towing a trailer, replacement of differential gear oil (front and rear) should be performed more frequently.**
**4) When the vehicle is used under the severe driving conditions mentioned in the following examples*, the continuously variable transmission fluid should be changed every 45,000 km (28,000 miles).**
**5) When the vehicle is used in the following areas, change fluid every 15,000 km (9,000 miles) or 12 months whichever occurs first.**
**(1) High humidity areas**
**(2) Mountainous areas**
**6) When the vehicle is used under severe driving conditions mentioned in the following examples*, the air cleaner element and air filter should be replaced more frequently.**
**7) 2.0L models in areas where the impurity content in the fuel is high.**

* Examples of severe driving conditions:
(1) Operating in extremely cold weather (Items 1, 2 and 16 only)
(2) Towing a trailer (Items 1, 2, 10, 11, 13 and 15 only)
(3) Repeated short trips (Items 1, 2, 13 and 14 only)
(4) Driving on dusty roads (Items 8, 13, 14, 16, 18 and 19 only)
(5) Driving on rough and/or muddy roads (items 13, 14, 16, 18 and 19 only)
(6) Driving in areas that use road salt or other corrosive materials (items 6, 13, 14, 15 and 16 only)
(7) Living on coastal areas (items 6, 13, 14, 15 and 16 only)

## Maintenance precautions

When maintenance and service are required, it is recommended that all work be done by an authorized SUBARU dealer.

If you perform maintenance and service by yourself, you should familiarize yourself with the information provided in this section on general maintenance and service for your SUBARU.

Incorrect or incomplete service could cause improper or unsafe vehicle operation. Any problems caused by improper maintenance and service performed by you are not eligible for warranty coverage.

**WARNING**

- **Always select a safe area when performing maintenance on your vehicle.**
- **Always be very careful to avoid injury when working on the vehicle. Remember that some of the materials in the vehicle may be hazardous if improperly used or handled, for example, battery acid.**
- **Your vehicle should only be serviced by persons fully competent to do so. Serious personal injury may result to persons not experienced in servicing vehicles.**
- **Always use the proper tools and make certain that they are well maintained.**
- **Never get under the vehicle supported only by a jack. Always use safety stands to support the vehicle.**
- **Never keep the engine running in a poorly ventilated area, such as a garage or other closed areas.**
- **Do not smoke or allow open flames around the fuel or battery. This will cause a fire.**
- **Because the fuel system is under pressure, we recommend that you have your SUBARU dealer perform the replacement of the fuel filter.**
- **Wear adequate eye protection to guard against getting oil or fluids in your eyes. If something does get in your eyes, thoroughly wash them out with clean water.**
- **Do not tamper with the wiring of the SRS airbag system or seatbelt pretensioner system, or attempt to take its connectors apart, as that may activate the system or it can render it inoperative when it should be operative. NEVER use a circuit tester for this wiring. If your SRS airbag or seatbelt pretensioner needs service, we recommend that you consult your nearest SUBARU dealer.**

**NOTE**

**SUBARU does not endorse the use of non-SUBARU approved flushing systems and strongly advises against performing these services on a SUBARU vehicle. Non-SUBARU approved flushing systems use chemicals and/or solvents which have not been tested or approved by SUBARU. SUBARU warranties do not cover any part of the vehicle which is damaged by adding or applying chemicals and/or solvents other than those approved or recommended by SUBARU.**

– CONTINUED –

## ■ Before checking or servicing in the engine compartment

**⚠ WARNING**

- **Always stop the engine and apply the parking brake firmly to prevent the vehicle from moving.**
- **Always let the engine cool down. Engine parts become very hot when the engine is running and remain hot for some time after the engine has stopped.**
- **Do not spill engine oil, engine coolant, brake fluid or any other fluid on hot engine components. This may cause a fire.**
- **When the ignition switch is in the "ON" position, the cooling fan may operate suddenly even when the engine is stopped. If your body or clothes come into contact with a rotating fan, that could result in serious injury. To avoid risk of injury, perform the following precautions.**
  - **Models with push-button start system:**
    **Always turn the push-button ignition switch to the "OFF" position and confirm that the operation indicator on the switch is turned off. Then take the access key fob out from the vehicle.**
  - **Models without push-button start system:**
    **Always remove the key from the ignition switch.**

## ■ When checking or servicing in the engine compartment

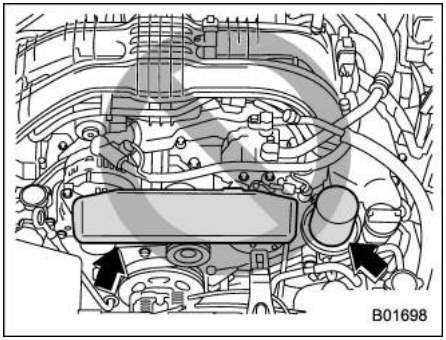


**⚠ CAUTION**

- **For models with the drive belt cover, do not contact the cover while checking the components in the engine compartment. Doing so may cause your hand to slip off the drive belt cover and result in an injury.**
- **Do not touch the oil filter until the engine has cooled down completely. Doing so may result in a burn or other injury. Note that the oil filter becomes very hot when the engine is running and remains hot for some time after the engine has stopped.**

## ■ When checking or servicing in the engine compartment while the engine is running

**⚠ WARNING**

**A running engine can be dangerous. Keep your fingers, hands, clothing, hair and tools away from the cooling fan, drive belt and any other moving engine parts. Removing rings, watches and ties is advisable.**

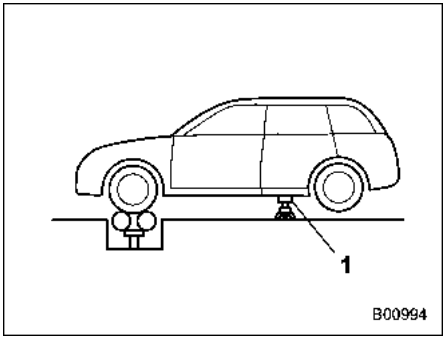


1) Safety stand

For any maintenance and inspection performed on AWD models which requires a running engine and wheels turning, jack up all four wheels or use free rollers to prevent the vehicle from moving. Never race the engine or brake suddenly.

# Maintenance tips

## ■ When replacing parts

For information about replacement parts for maintenance, we recommend that you contact any authorized SUBARU dealer or repairer, or another duly qualified and equipped professional.

## ■ Removing and reinstalling clips

Some clips and fender linings must be removed before replacing the air cleaner elements or specific bulbs.

### ▼ Removing clips

There are several types of clips used for your vehicle.

### ▽ Type A clips

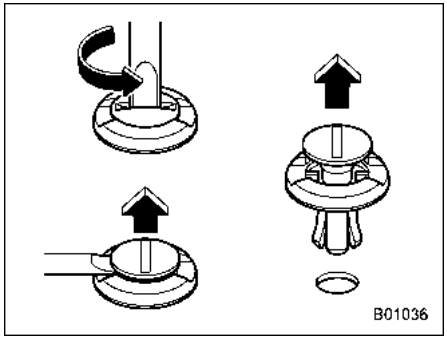


1. Turn the clips counterclockwise using a flat-head screwdriver until the center portion of the clip is raised.
2. Remove the clips with a flat-head screwdriver using leverage.
3. Remove the entire clip by pulling it up.

– CONTINUED –

### ▽ Type B clips

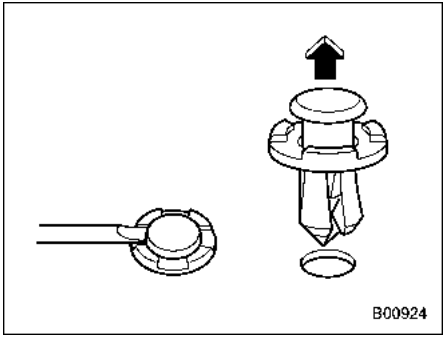


1. Pull out the center portion of the clip using a flat-head screwdriver as shown in the illustration.
2. Pull the protruded center portion to remove the entire body of the clip.

### ▽ Type C clips

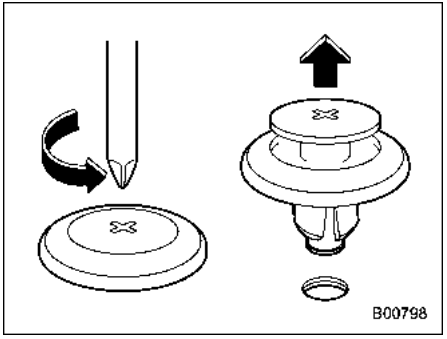


1. Turn the clip counterclockwise using a Phillips screwdriver until the center portion of the clip is raised.
2. Remove the entire clip by pulling it up.

### ▼ Reinstalling clips

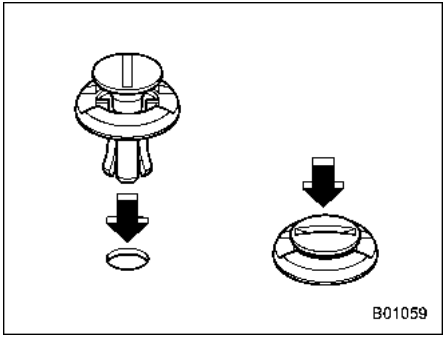


**Type A clips**

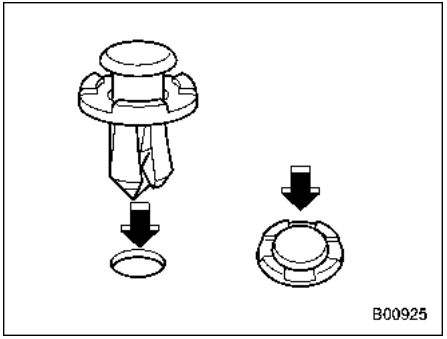


**Type B clips**

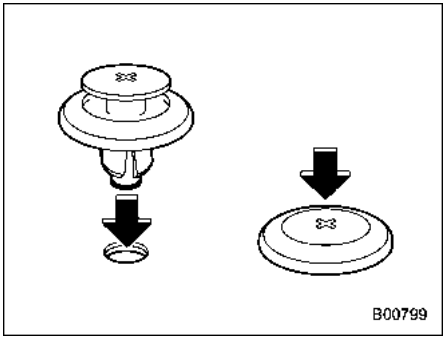


**Type C clips**

Insert the clip without the center portion first and then push the center portion of the clip into the hole.

## Engine hood

**CAUTION**

- **When you open the engine hood, do not stand the wiper blades up. Furthermore, while the hood is open, do not operate the windshield wipers. Doing so could result in damage to the engine hood and wiper blades.**
- **Be extremely careful not to catch fingers or other objects when closing the engine hood.**
- **Do not push the hood forcibly to close it. It could deform the metal.**
- **Be extremely careful opening the engine hood when the wind is strong. The engine hood could close suddenly, possibly causing injuries from slamming.**
- **Do not install accessories other than genuine SUBARU parts or an equivalent to the engine hood. If the engine hood becomes too heavy, the stay may not be able to support holding it open.**

**To open the hood:**

1. If the wiper blades are lifted off the windshield, return them to their original positions.

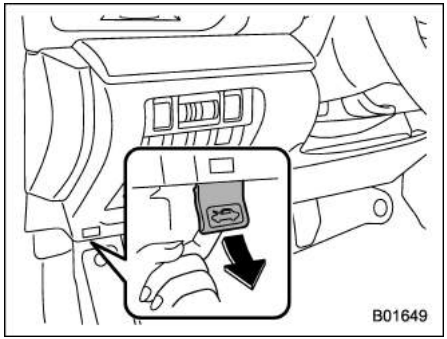


2. Pull the hood lock release knob under the instrument panel.

– CONTINUED –

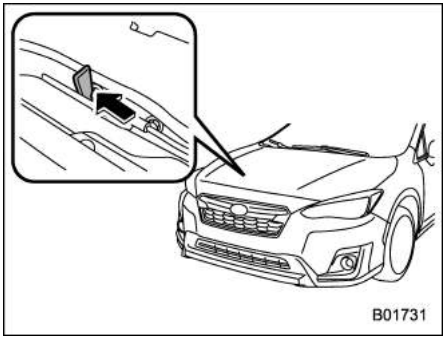


3. Release the secondary hood release by moving the lever between the front grille and the hood toward the left.

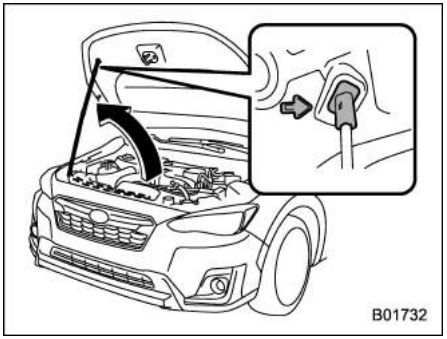


4. Lift up the hood, release the hood prop from its retainer and put the end of the hood prop into the slot in the hood.

**To close the hood:**

1. Lift the hood slightly and remove the hood prop from the slot in the hood and return the prop to its retainer.
2. Lower the hood to a height of approximately 15 cm (5.9 in) above its closed position and then let it drop.
3. After closing the hood, be sure the hood is securely locked.

If this does not close the hood, release it from a slightly higher position.

**WARNING**

**Always check that the hood is properly locked before you start driving. If it is not, it might fly open while the vehicle is moving and block your view, which may cause an accident and serious bodily injury.**

## Engine compartment overview

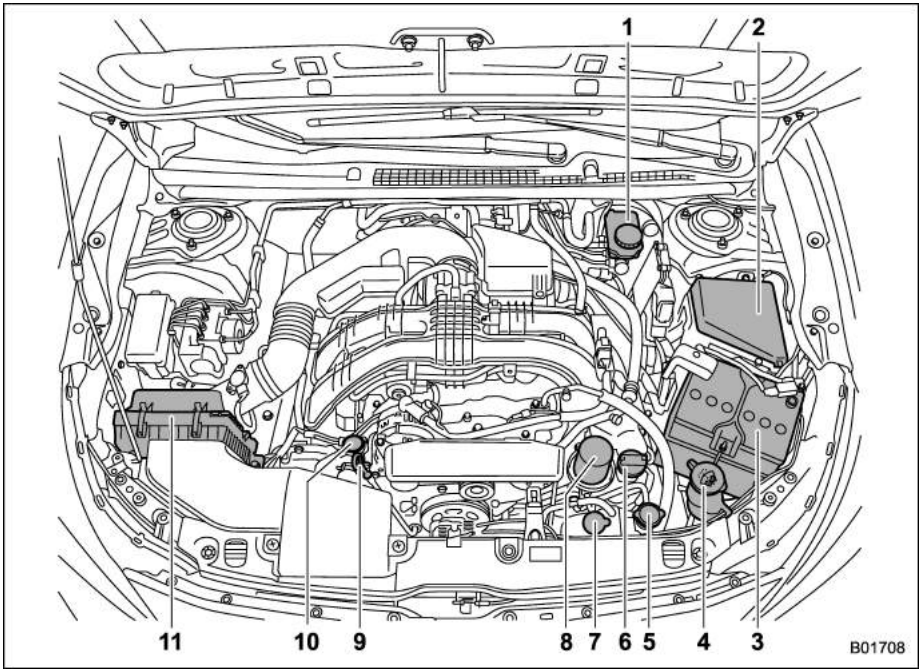


The illustration above is for left-hand drive models. The location of item No. 1 (Brake fluid reservoir) for right-hand drive models is the opposite of that shown here.

1) Brake fluid reservoir (page 11-22)
2) Fuse box (page 11-39)
3) Battery (page 11-38)
4) Windshield washer tank (page 11-32)
5) Radiator cap (page 11-17)
6) Engine oil filler cap (page 11-14)
7) Engine coolant reservoir (page 11-17)
8) Engine oil filter (page 11-15)
9) Engine oil level gauge (page 11-14)
10) Coolant pipe cap (page 11-19)
11) Air cleaner case (page 11-19)

# Engine oil

**⚠ CAUTION**

- **If the level gauge cannot be pulled out easily, twist the level gauge right and left, then gently pull it out. Otherwise, you may be injured accidentally straining yourself.**
- **Use only engine oil with the recommended grade and viscosity.**
- **Be careful not to spill engine oil when adding it. If oil touches the exhaust pipe, it may cause a bad smell, smoke, and/or a fire. If engine oil gets on the exhaust pipe, be sure to wipe it off.**

## ■ Engine oil consumption

Some engine oil will be consumed while driving. Under the following conditions, oil consumption can be increased and thus require refilling between maintenance intervals:

- When the engine is new and within the break-in period
- When the engine oil is of lower quality
- When the incorrect oil viscosity is used
- When engine braking is employed
- When the engine is operated at high engine speeds
- When the engine is operated under heavy loads
- When towing a trailer
- When the engine idles for long periods of time
- When the vehicle is operated in stop and go and/or heavy traffic situations
- When the vehicle is used under severe thermal conditions
- When the vehicle accelerates and decelerates frequently

Under these or similar conditions, you should check your oil at least every 2nd fuel fill-up and change your engine oil more frequently. If your oil consumption rate is greater than 1 liter every 2,000 kilometers or 1 quart every 1,200 miles, we recommend that you contact your SUBARU dealer who may perform a test under controlled conditions.

## ■ Checking the oil level

1. Park the vehicle on a level surface and stop the engine. If you check the oil level just after stopping the engine, wait a few minutes for the oil to drain back into the oil pan before checking the level.

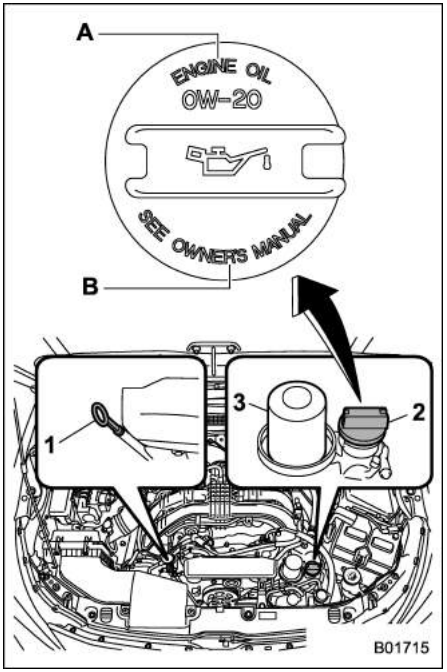


1) Oil level gauge
2) Oil filler cap
3) Oil filter
A) ENGINE OIL
B) SEE OWNER'S MANUAL

**CAUTION**

**If the level gauge cannot be pulled out easily, twist the level gauge to the right and left before attempting to pull it out again. Failure to do so may result in straining or injuries.**

2. Pull out the level gauge, wipe it clean, and insert it again.
3. Be sure the level gauge is correctly inserted until it stops.

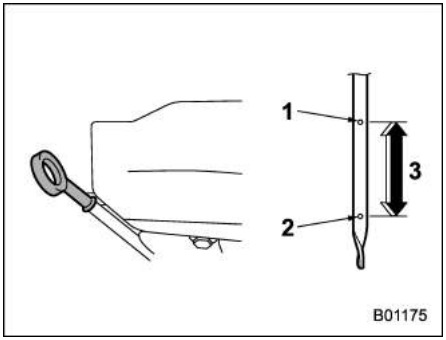


1) Full level
2) Low level
3) Approximately 1.0 liter (1.1 US qt, 0.9 Imp qt) from low level to full level

4. Pull out the oil level gauge again.
5. Check the oil levels on both sides of the level gauge. The engine oil level must be judged by the lowest of the two levels. If the oil level is below the low level mark, add oil so that the full level is reached.

**CAUTION**

**Be careful not to touch the engine oil filter when removing the oil filler cap. Doing so may result in a burn, a pinched finger, or may cause some other injury.**

To add engine oil, remove the engine oil filler cap and slowly pour engine oil through the filler neck. After pouring oil into the engine, you must use the level gauge to confirm that the oil level is correct.

## NOTE

- **To prevent overfilling the engine oil, do not add any additional oil above the full level when the engine is cold.**
- **The engine low oil level warning light may stay illuminated when the engine is started straight after topping up or changing the engine oil. In such cases, park the vehicle on a level surface and wait for more than a minute until the oil level settles, after which the warning light will turn off.**

**Refer to "Engine low oil level warning light" ☞3-19.**

## ■ Changing the oil and oil filter

Change the oil and oil filter according to the maintenance schedule.

The engine oil and oil filter must be changed more frequently than listed in the maintenance schedule, when short trips are frequently made, when towing a trailer, or when driving in extremely cold weather.

## NOTE

**Changing the engine oil and oil filter should be performed by a well-trained expert. Contact your SUBARU dealer for changing the engine oil and oil filter. Fully trained mechanics are on standby at a SUBARU dealer to utilize the special tools, spare parts and recommended oil for this work, and also, used oils are properly disposed of.**

– CONTINUED –

## ■ Recommended grade and viscosity

**⚠ CAUTION**

**Use only engine oil with the recommended grade and viscosity.**

Refer to “Engine oil” ☞12-4.

### NOTE

**Engine oil viscosity (thickness) affects fuel economy. Oils of lower viscosity provide better fuel economy. However, in hot weather, oil of higher viscosity is required to properly lubricate the engine.**

## ■ Synthetic oil

You can use synthetic engine oil that meets the same requirements given for conventional engine oil. When using synthetic oil, you must use oil of the same classification, viscosity and grade shown in this Owner’s Manual. Refer to “Engine oil” ☞12-4. Also, you must follow the oil and filter changing intervals shown in the maintenance schedule. Refer to “Maintenance schedule” ☞11-3.

### NOTE

**Synthetic oil of the grade and viscosity noted in chapter 12 is the recommended engine oil for optimum engine performance. Conventional oil may be used with no detriment to engine durability or driveability.**

# Cooling system

**⚠ CAUTION**

- **The cooling system has been filled at the factory with a high quality, corrosion-inhibiting, year-around coolant which provides protection against freezing down to −36°C (−33°F). Make sure to always use genuine SUBARU Super Coolant or an equivalent (non-amine type coolant).**
- **If the coolant requires water dilution, be sure to use soft water (or clear and drinkable water) and to follow the required dilution ratio.**
- **Mixing with a different coolant and/or hard water may result in problems including, but not limited to, shortened engine component life, cooling system clogging, coolant leaks and engine damage from overheating. Therefore, never mix different kinds of coolant and/or hard water even if freezing temperatures are not expected.**

- **Do not splash the engine coolant over painted parts. The alcohol contained in the engine coolant may damage the paint surface.**

## ■ Cooling fan, hose and connections

Your vehicle employs an electric cooling fan which is thermostatically controlled to operate when the engine coolant reaches a specific temperature.

If the radiator cooling fan does not operate even when the coolant temperature high warning light blinks or illuminates in RED, the cooling fan circuit may be defective. Refer to “Coolant temperature low indicator light/Coolant temperature high warning light” ☞3-18.

Check the fuse and replace it if necessary. Refer to “Fuses” ☞11-39 and “Fuse panel located in the engine compartment” ☞12-12.

If the fuse is not blown, we recommend that you have the cooling system checked by your SUBARU dealer.

If frequent addition of coolant is necessary, there may be a leak in the engine cooling system. It is recommended that the cooling system and connections be checked for leaks, damage, or looseness.

## ■ Engine coolant

**⚠ WARNING**

**Never attempt to remove the radiator cap until the engine has been shut off and has cooled down completely. Since the coolant is under pressure, you may suffer serious burns from a spray of boiling hot coolant when the cap is removed.**

### ▼ Checking the coolant level

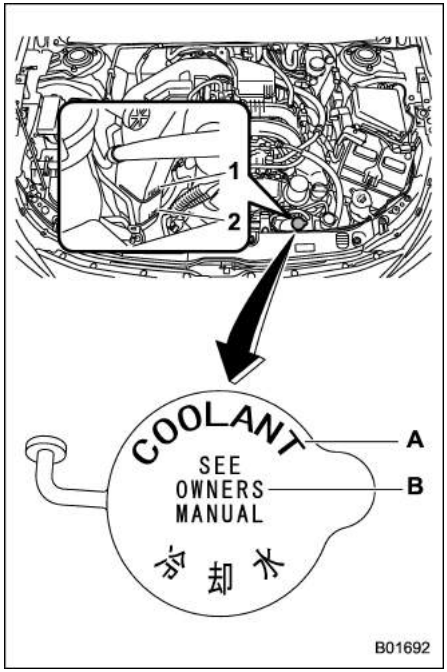


1) “FULL” level mark
2) “LOW” level mark
A) COOLANT
B) SEE OWNER’S MANUAL

Check the coolant level at each fuel stop.

– CONTINUED –

1. Check the coolant level on the outside of the reservoir while the engine is cool.
2. If the level is close to or lower than the “LOW” level mark, add coolant up to the “FULL” level mark.

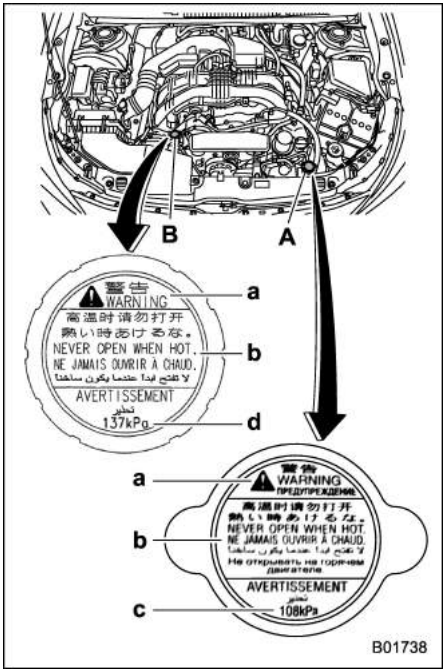


A) Radiator cap
B) Coolant pipe cap

**Label on the cap**

a) WARNING
b) NEVER OPEN WHEN HOT.
c) 108 kPa
d) 137 kPa

3. If the reserve tank is empty, remove the radiator cap and refill coolant up to just below the filler neck as shown in the following illustration.

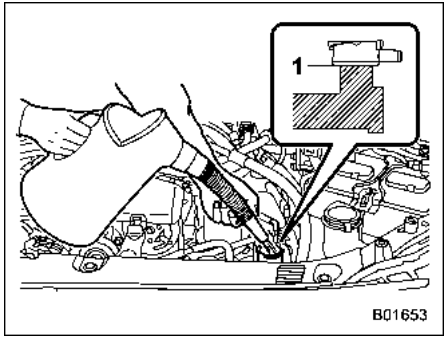


1) Fill up to this level

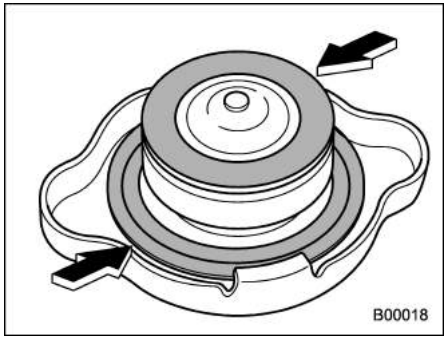


4. After refilling the reserve tank and the

radiator, reinstall the cap and check that the rubber gaskets inside the radiator cap are in the proper position.

**CAUTION**

- **Be careful not to spill engine coolant when adding it. If coolant touches the exhaust pipe, it may cause a bad smell, smoke, and/or a fire. If engine coolant gets on the exhaust pipe, be sure to wipe it off.**
- **Do not splash the engine coolant over painted parts. The alcohol contained in the engine coolant may damage the paint surface.**

### ▼ Changing the coolant

It may be difficult to change the coolant. We recommend that you have the coolant changed by your SUBARU dealer if necessary.

The coolant should be changed according to the maintenance schedule in the "Maintenance schedule" ☞11-3.

**NOTE**

**The coolant pipe cap (without tabs) does not need to be removed. To add coolant, remove the radiator cap (with tabs) on the radiator.**

## Air cleaner element

The air cleaner element functions as a filter screen. When the element is perforated or removed, engine wear will be excessive and engine life shortened.

It is not necessary to clean or wash the air cleaner element.

**WARNING**

**Do not operate the engine with the air cleaner element removed. The air cleaner element not only filters intake air but also stops flames if the engine backfires. If the air cleaner element is not installed when the engine backfires, you could be burned.**

**CAUTION**

**When replacing the air cleaner element, we recommend that you use a genuine SUBARU air cleaner element. If it is not used, there is the possibility of causing a negative effect to the engine.**

– CONTINUED –

## ■ Replacing the air cleaner element

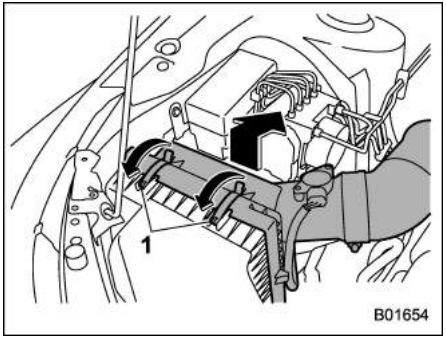


1) Clips

1. Unsnap the two clips holding the air cleaner case (rear).
2. Open the air cleaner case and pull the cover rearward while lifting it up.

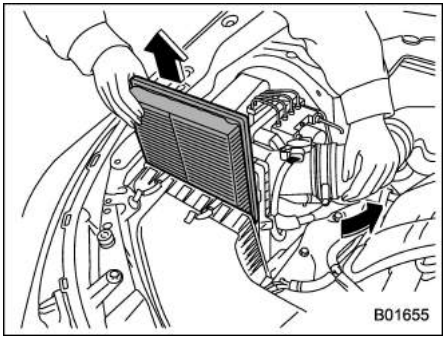


3. Remove the air cleaner element.
4. Clean the inside of the air cleaner case (both front and rear) with a damp cloth and install a new air cleaner element.

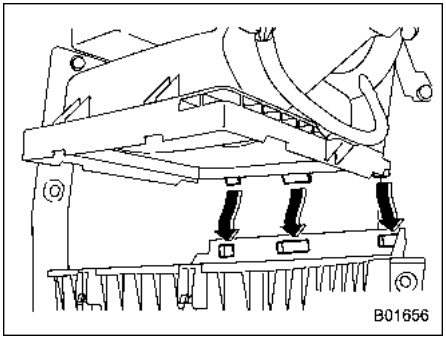


5. To install the air cleaner case (rear), insert the three projections on the air cleaner case (rear) into the slits on the air cleaner case (front).
6. Install in the reverse order of removal.

## NOTE

**Install the air cleaner element so that the surface with "UPR" printed on it faces upward.**

## Spark plugs

It may be difficult to replace the spark plugs. We recommend that you have the spark plugs replaced by your SUBARU dealer.

The spark plugs should be replaced according to the maintenance schedule. Refer to “Maintenance schedule” ☞11-3.

### NOTE

**For the recommended spark plugs, refer to “Electrical system” ☞12-9.**

## Drive belts

It is unnecessary to check the deflection of the drive belt periodically because your engine is equipped with an automatic belt tension adjuster. However, replacement of the belt should be done according to the maintenance schedule in the “Maintenance schedule” ☞11-3. We recommend that you consult your SUBARU dealer for replacement.

If the drive belt is loose, cracked or worn, contact your SUBARU dealer.

## Continuously variable transmission fluid

There is no fluid level gauge. It is unnecessary to check the continuously variable transmission fluid level. However, if necessary, we recommend that you consult your SUBARU dealer for inspection.

## Front differential gear oil (all models) and rear differential gear oil (AWD models)

There is no oil level gauge. To check the front and rear differential gear oil level, we recommend that you consult your SUBARU dealer.

### ■ Recommended grade and viscosity

Each oil manufacturer has its own base oils and additives. Never use different brands together. For details, refer to “Front differential and rear differential gear oil” ☞12-6.

**⚠ CAUTION**

**Using a differential gear oil other than the specified oil may cause a decline in vehicle performance.**

## Brake fluid

### ■ Checking the fluid level

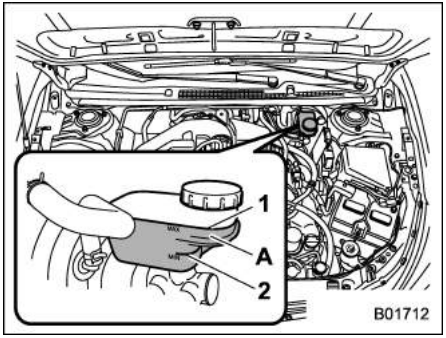


1) “MAX” level line
2) “MIN” level line
A) The fluid level must be checked in this area.

Check the fluid level monthly.

Check the fluid level on the outside of the reservoir. Be sure to check the fluid level for the brake system at the **shaded area in the illustration**. If the level is below “MIN”, add the recommended brake fluid to “MAX”.

Use only brake fluid from a sealed container.

**⚠ WARNING**

- **Never let brake fluid contact your eyes because brake fluid can be harmful to your eyes. If brake fluid gets in your eyes, immediately flush them thoroughly with clean water. For safety, when performing this work, wearing eye protection is advisable.**
- **Brake fluid absorbs moisture from the air. Any absorbed moisture can cause a dangerous loss of braking performance.**
- **If the vehicle requires frequent refilling, there may be a leak. If you suspect a problem, we recommend that you have the vehicle checked at your SUBARU dealer.**

**⚠ CAUTION**

- **When adding brake fluid, be careful not to allow any dirt into the reservoir.**
- **Never splash the brake fluid over painted surfaces or rubber parts. Alcohol contained in the brake fluid may damage them.**

- **Be careful not to spill brake fluid when adding it. If brake fluid touches the exhaust pipe, it may cause a bad smell, smoke, and/or a fire. If brake fluid gets on the exhaust pipe, be sure to wipe it off.**

## ■ Recommended brake fluid

Refer to “Fluids” ☞12-8.

**⚠ CAUTION**

**Never use different brands of brake fluid together. Also, avoid mixing DOT 3 and DOT 4 brake fluids even if they are the same brand.**

# Brake booster

If the brake booster does not operate as described in the following, we recommend that you have it checked by your SUBARU dealer.

1. With the engine off, depress the brake pedal several times, applying the same pedal force each time. The distance the pedal travels should not vary.
2. With the brake pedal depressed, start the engine. The pedal should move slightly down to the floor.
3. With the brake pedal depressed, stop the engine and keep the pedal depressed for 30 seconds. The pedal height should not change.
4. Start the engine again and run for approximately 1 minute then turn it off. Depress the brake pedal several times to check the brake booster. The brake booster operates properly if the pedal stroke decreases with each depression.

# Brake pedal

Check the brake pedal free play and reserve distance according to the maintenance schedule.

## ■ Checking the brake pedal free play

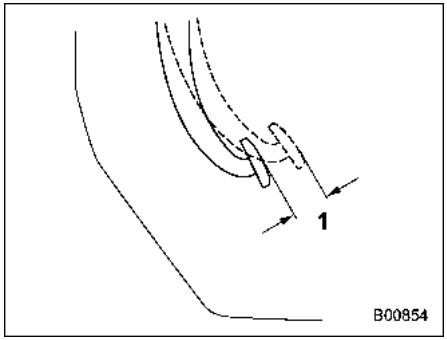


1) 0.5 – 2.7 mm (0.02 – 0.11 in)

Stop the engine and firmly depress the brake pedal several times. Then, check the amount of free play by pulling up the brake pedal with a force of less than 10 N (1 kgf, 2 lbf).

If the free play is not within proper specification, we recommend that you contact your SUBARU dealer.

– CONTINUED –

## ■ Checking the brake pedal reserve distance

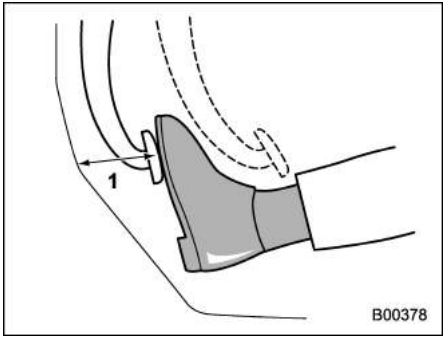


1) Left-hand drive models:
More than 65 mm (2.56 in)
Right-hand drive models:
More than 85 mm (3.35 in)

Depress the pedal with a force of approximately 294 N (30 kgf, 66 lbf) and measure the distance between the upper surface of the pedal pad and the floor.

When the measurement is smaller than the specification, or when the pedal does not operate smoothly, we recommend that you contact your SUBARU dealer.

## Hill start assist system

Ensure that the Hill start assist system operates properly under the following circumstances.

1. Stop the vehicle on an uphill grade by depressing the brake pedal, with the engine running.
2. Make sure that the vehicle does not move backward for several seconds after the brake pedal is released.
3. Then make sure the vehicle starts climbing the grade by following the normal starting procedures.

If the Hill start assist system does not operate as described above, we recommend that you contact your SUBARU dealer.

## Replacement of brake pad

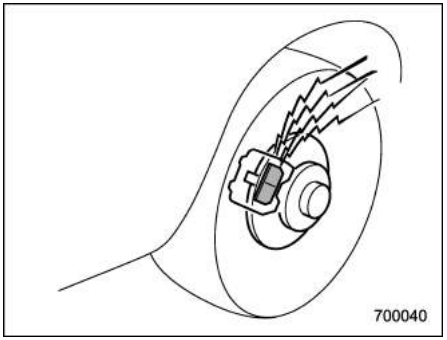


The disc brakes have audible wear indicators on the brake pads. If the brake pads wear close to their service limit, the wear indicator makes a very audible scraping noise when the brake pedal is applied.

If you hear this scraping noise each time you apply the brake pedal, we recommend that you have the brake pads serviced by your SUBARU dealer as soon as possible.

**⚠ CAUTION**

- **If you continue to drive despite the scraping noise from the audible brake pad wear indicator, it will result in the need for costly**

**brake rotor repair or replacement.**

- **It is recommended that you disconnect the vehicle battery before replacing the brake pad. However, it is dangerous to disconnect the vehicle battery. We recommend that you have your SUBARU dealer replace the brake pad.**

## ■ Breaking-in of new brake pads

When replacing the brake pad, we recommend that you use only genuine SUBARU parts. After replacement, the new parts must be broken in as follows:

### ▼ Brake pad

While maintaining a speed of 50 to 65 km/h (30 to 40 mph), step on the brake pedal lightly. Repeat this five or more times.

**⚠ WARNING**

**A safe location and situation should be selected for break-in driving.**

# Tires and wheels

## ■ Types of tires

You should be familiar with type of tires present on your vehicle.

### ▼ All season tires

All season tires are designed to provide an adequate measure of traction, handling and braking performance in year-round driving including snowy and icy road conditions. However all season tires do not offer as much traction performance as winter (snow) tires in heavy or loose snow or on icy roads.

All season tires are identified by “ALL SEASON” and/or “M+S” (Mud & Snow) on the tire sidewall.

### ▼ Summer tires

Summer tires are high-speed capability tires best suited for highway driving under dry conditions.

Summer tires are inadequate for driving on slippery roads such as on snow-covered or icy roads.

If you drive your vehicle on snow-covered or icy roads, we strongly recommend the use of winter (snow) tires.

When installing winter tires, be sure to replace all four tires.

### ▼ Winter (snow) tires

Winter tires are best suited for driving on snow-covered and icy roads. However winter tires do not perform as well as summer tires and all season tires on roads other than snow-covered and icy roads.

## ■ Tire pressure monitoring system (TPMS) (if equipped)

The tire pressure monitoring system provides the driver with a warning message by sending a signal from a sensor that is installed in each wheel when tire pressure is severely low. The tire pressure monitoring system will activate only when the vehicle is driven. Also, this system may not react immediately to a sudden drop in tire pressure (for example, a blow-out caused by running over a sharp object).

If you adjust the tire pressures in a warm garage and will then drive the vehicle in cold outside air, the resulting drop in tire pressures may cause the low tire pressure warning light to illuminate. To avoid this problem when adjusting the tire pressures in a warm garage, inflate the tires to pressures higher than those shown on the tire placard. Specifically, inflate them by an extra 6.9 kPa (0.07 kgf/cm$^2$, 1 psi) for every difference of 5.6°C (10°F) between the temperature in the garage and the

– CONTINUED –

temperature outside. By way of example, the following table shows the required tire pressures that correspond to various outside temperatures when the temperature in the garage is 15.5°C (60°F).

**Example:**

Tire size: 225/60R17 99H

Standard tire pressures:

Front: 230 kPa (2.3 kgf/cm$^2$, 33 psi)

Rear: 220 kPa (2.2 kgf/cm$^2$, 32 psi)

Garage temperature: 15.5°C (60°F)

| Outside temperature | Adjusted pressure [kPa (kgf/cm$^2$, psi)] | |
|---|---|---|
| | Front | Rear |
| −1°C (30°F) | 250 (2.5, 36) | 240 (2.4, 35) |
| −12°C (10°F) | 265 (2.65, 38) | 255 (2.55, 37) |
| −23°C (−10°F) | 280 (2.8, 41) | 270 (2.7, 39) |

If the low tire pressure warning light illuminates when you drive the vehicle in cold outside air after adjusting the tire pressures in a warm garage, re-adjust the tire pressures using the method described above. Then, increase the vehicle speed to at least 40 km/h (25 mph) and check to see that the low tire pressure warning light turns off a few minutes later. If the low tire pressure warning light does not turn off, the tire pressure monitoring system may not be functioning normally. In this event, we recommend that you go to a SUBARU dealer to have the system inspected as soon as possible.

While the vehicle is driven, friction between tires and the road surface causes the tires to warm up. After illumination of the low tire pressure warning light, any increase in the tire pressures caused by an increase in the outside air temperature or by an increase in the temperature in the tires can cause the low tire pressure warning light to turn off.

System resetting is necessary when the wheels are changed (for example, a switch to snow tires) and new TPMS valves are installed on the newly fitted wheels. We recommend that you have this work performed by a SUBARU dealer following wheel replacement.

It may not be possible to install TPMS valves on certain wheels that are on the market. Therefore, if you change the wheels (for example, a switch to snow tires), use wheels that have the same part number as the standard-equipment wheels. Without four operational TPMS valve/sensors on the wheels, the TPMS will not fully function and the warning light on the combination meter will illuminate steadily after blinking for approximately one minute.

When a tire is replaced, adjustments are necessary to ensure continued normal operation of the tire pressure monitoring system. As with wheel replacement, therefore, we recommend that you have the work performed by a SUBARU dealer.

**WARNING**

**If the low tire pressure warning light does not illuminate briefly after the ignition switch is turned ON or the light illuminates steadily after blinking for approximately one minute, we recommend that you have your Tire Pressure Monitoring System checked at a SUBARU dealer as soon as possible.**

**If this light illuminates while driving, never brake suddenly and keep driving straight ahead while gradually reducing speed. Then slowly pull off the road to a safe place. Otherwise an accident involving serious vehicle damage and serious personal injury could occur.**

**If this light still illuminates while driving after adjusting the tire pressure, a tire may have significant damage and a fast leak that causes the tire to lose air rapidly. If you have a flat tire, replace it with a spare tire**

**as soon as possible.**

**When a spare tire is mounted or a wheel rim is replaced without the original pressure sensor/transmitter being transferred, the low tire pressure warning light will illuminate steadily after blinking for approximately one minute. This indicates the TPMS is unable to monitor all four road wheels. We recommend that you contact your SUBARU dealer as soon as possible for tire and sensor replacement and/or system resetting. If the light illuminates steadily after blinking for approximately one minute, we recommend that you promptly contact a SUBARU dealer to have the system inspected.**

## ■ Tire inspection

Check on a daily basis that the tires are free from serious damage, nails, and stones. At the same time, check the tires for abnormal wear.

We recommend that you contact your SUBARU dealer immediately if you find any problem.

### NOTE

- **When the wheels and tires strike curbs or are subjected to harsh treatment as when the vehicle is driven on a rough surface, they can suffer damage that cannot be seen with the naked eye. This type of damage does not become evident until time has passed. Try not to drive over curbs, potholes or on other rough surfaces. If doing so is unavoidable, keep the vehicle's speed down to a walking pace or less, and approach the curbs as squarely as possible. Also, make sure the tires are not pressed against the curb when you park the vehicle.**
- **If you feel unusual vibration while driving or find it difficult to steer the vehicle in a straight line, one of the tires and/or wheels may be damaged. We recommend that you drive slowly to the nearest authorized SUBARU dealer and have the vehicle inspected.**

## ■ Tire pressures and wear

Maintaining the correct tire pressures helps to maximize the tires' service lives and is essential for good running performance. Check and, if necessary, adjust the pressure of each tire (including the spare - if equipped) at least once a month (for example, during a fuel stop) and before any long journey.

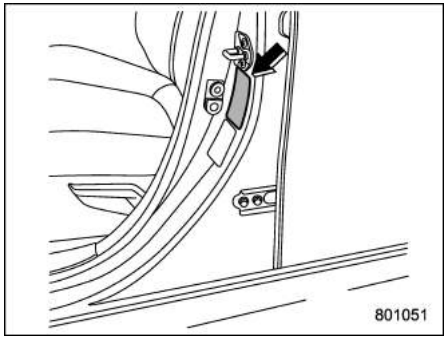


**Tire placard**

Check the tire pressures when the tires are cold. Use a pressure gauge to adjust the tire pressures to the values shown on the tire placard. The tire placard is located on the door pillar on the driver's side.

Driving even a short distance warms up the tires and increases the tire pressures. Also, the tire pressures are affected by the outside temperature. It is best to check tire

– CONTINUED –

pressure outdoors before driving the vehicle.

When a tire becomes warm, the air inside it expands, causing the tire pressure to increase. Be careful not to mistakenly release air from a warm tire to reduce its pressure.

## NOTE

- **The air pressure in a tire increases by approximately 30 kPa (0.3 kgf/cm², 4.3 psi) when the tire becomes warm.**
- **The tires are considered cold when the vehicle has been parked for at least three hours or has been driven less than 1.6 km (1 mile).**

**⚠ WARNING**

**Do not let air out of warm tires to adjust pressure. Doing so will result in low tire pressure.**

Incorrect tire pressures detract from controllability and ride comfort, and they cause the tires to wear abnormally.

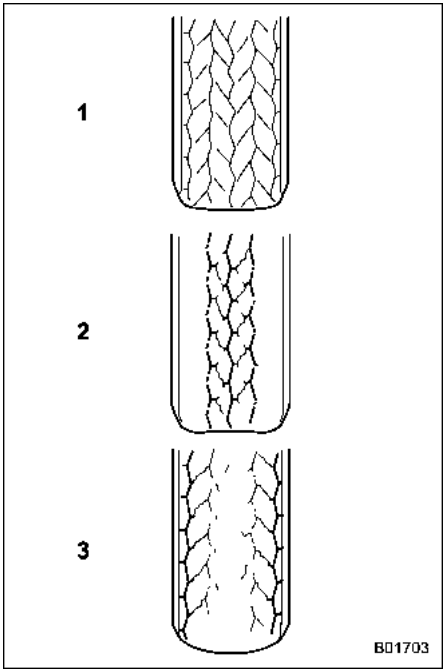


1) Correct tire pressure (tread worn evenly)
   Roadholding is good, and steering is responsive. Rolling resistance is low, so fuel consumption is also lower.
2) Under inflated tire (tread worn on shoulders).
   Rolling resistance is high, so fuel consumption is also higher.
3) Over inflated tire (tread worn in the center).
   Ride comfort is poor. Also, the tire magnifies the effects of road-surface bumps and dips, possibly resulting in vehicle damage.

If the tire placard shows tire pressures for the vehicle when fully loaded and for the vehicle when towing a trailer, adjust the tire pressures to the values that match the loading conditions.

**⚠ WARNING**

**Driving at high speeds with excessively low tire pressures can cause the tires to deform severely and to rapidly heat up. A sharp increase in temperature could cause tread separation, and destruction of the tires. The resulting loss of vehicle control could lead to an accident.**

## ■ Wheel balance

Each wheel was correctly balanced when your vehicle was new, but the wheels will become unbalanced as the tires become worn during use. Wheel imbalance causes the steering wheel to vibrate slightly at certain vehicle speeds and detracts from the vehicle's straight-line stability. It can also cause steering and suspension system problems and abnormal tire wear. If you suspect that the wheels are not correctly balanced, we recommend that you have them checked and adjusted by your SUBARU dealer. Also have them adjusted after tire repairs and after tire rotation.

**⚠ CAUTION**

**Loss of correct wheel alignment causes the tires to wear on one side and reduces the vehicle's running stability. We recommend that you contact your SUBARU dealer if you notice abnormal tire wear.**

### NOTE

**The suspension system is designed to hold each wheel at a certain alignment (relative to the other wheels and to the road) for optimum straight-line stability and cornering performance.**

## ■ Wear indicators

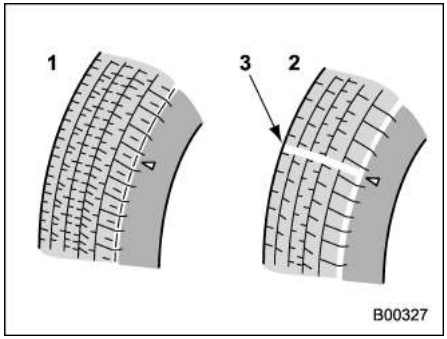


1) New tread
2) Worn tread
3) Tread wear indicator

Each tire incorporates a tread wear indicator, which becomes visible when the depth of the tread grooves decreases to 1.6 mm (0.063 in). A tire must be replaced when the tread wear indicator appears as a solid band across the tread.

**⚠ WARNING**

**When a tire's tread wear indicator becomes visible, the tire is worn beyond the acceptable limit and must be replaced immediately. With a tire in this condition, driving at high speeds in wet weather can cause the vehicle to hydroplane. The resulting loss of vehicle control can lead to an accident.**

### NOTE

**For safety, inspect tire tread regularly and replace the tires before their tread wear indicators become visible.**

## ■ Tire rotation direction mark

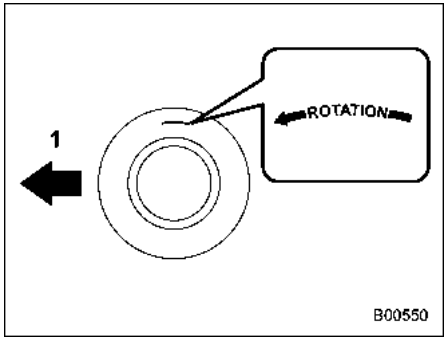


**Example of tire rotation direction mark**
1) Front

If the tire has the rotation direction specification, the tire rotation direction mark is placed on its sidewall.

When you install a tire that has the tire rotation direction mark, install the tire with

– CONTINUED –

the direction mark facing forward.

## ■ Tire rotation

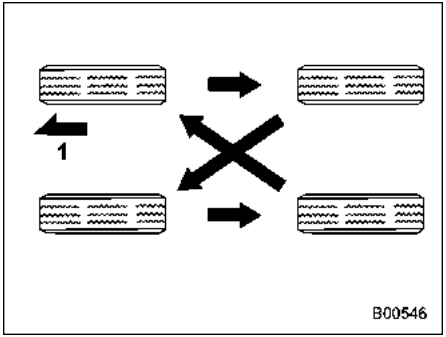


**Models equipped with 4 non-unidirectional tires**
1) Front

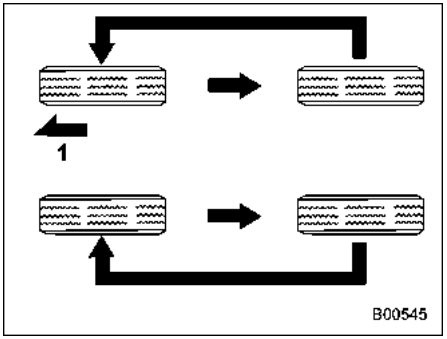


**Models equipped with unidirectional tires**
1) Front

Tire wear varies from wheel to wheel. To maximize the life of each tire and ensure that the tires wear uniformly, it is best to rotate the tires every 10,000 km (6,000 miles). Move the tires to the positions shown in the illustration each time they are rotated.

Replace any damaged or unevenly worn tire at the time of rotation. After tire rotation, adjust the tire pressures and make sure the wheel nuts are correctly tightened.

After driving approximately 1,000 km (600 miles), check the wheel nuts again and retighten any nut that has become loose.

For handling alloy wheels, refer to “Alloy wheels” ☞11-32.

▼ **Models with flat tire repair kit**

### NOTE

**It may be difficult to rotate the tires. We recommend that you have the tires rotated by your SUBARU dealer.**

## ■ Tire replacement

The wheels and tires are important and integral parts of your vehicle’s design; they cannot be changed arbitrarily. The tires fitted as standard equipment are optimally matched to the characteristics of the vehicle and were selected to give the best possible combination of running performance, ride comfort, and service life. It is essential for every tire to have a size and construction matching those shown on the tire placard and to have a speed symbol and load index matching those shown on the tire placard.

Using tires of a non-specified size detracts from controllability, ride comfort, braking performance, speedometer accuracy and odometer accuracy. It also creates incorrect body-to-tire clearances and inappropriately changes the vehicle’s ground clearance.

All four tires must be the same in terms of manufacturer, brand (tread pattern), construction, and size. You are advised to replace the tires with new ones that are identical to those fitted as standard equipment.

For safe vehicle operation, SUBARU recommends replacing all four tires at the same time.

**WARNING**

- **When replacing or installing tire(s), all four tires must be the same for the following items.**
  **(a) Size**
  **(b) Circumference**
  **(c) Speed symbol**
  **(d) Load index**
  **(e) Construction**
  **(f) Manufacturer**
  **(g) Brand (tread pattern)**
  **(h) Degrees of wear**

  **For items (a) to (d), you must obey the specification that is printed on the tire placard. The tire placard is located on the driver's door pillar.**

  **If all four tires are not the same in items (a) to (h), there is a possibility that it may lead to serious mechanical damage to the drive train of your car and affect the following factors.**
  **– Ride**
  **– Handling**
  **– Braking**
  **– Speedometer/Odometer calibration**
  **– Clearance between the body and the tires**

  **It also may be dangerous and lead to loss of vehicle control, and it can lead to an accident.**
- **Use only radial tires. Do not use radial tires together with belted bias tires and/or bias-ply tires. Doing so can dangerously reduce controllability, resulting in an accident.**

## ■ Wheel replacement

When replacing wheels due, for example, to damage, make sure the replacement wheels match the specifications of the wheels that are fitted as standard equipment. Replacement wheels are available from SUBARU dealers.

**WARNING**

**Use only those wheels that are specified for your vehicle. Wheels not meeting specifications could interfere with brake caliper operation and may cause the tires to rub against the wheel well housing during turns. The resulting loss of vehicle control could lead to an accident.**

**NOTE**

**When any of the wheels are removed and replaced for tire rotation or to change a flat tire, always check the tightness of the wheel nuts after driving approximately 1,000 km (600 miles). If any nut is loose, tighten it to the specified torque.**

## Alloy wheels

Alloy wheels can be scratched and damaged easily. Handle them carefully to maintain their appearance, performance, and safety.

- When any of the wheels are removed and replaced for tire rotation or to change a flat, always check the tightness of the wheel nuts after driving approximately 1,000 km (600 miles). If any nut is loose, tighten it to the specified torque.
- Never apply oil to the threaded parts, wheel nuts, or tapered surface of the wheel.
- Never let the wheel rub against sharp protrusions or curbs.
- Be sure to fit tire chains on uniformly and completely around the tire, otherwise the chains may scratch the wheel.
- When wheel nuts, balance weights, or the center cap is replaced, we recommend that you replace them with genuine SUBARU parts designed for alloy wheels.
- When stacking and storing removed tires, place shock-absorbing material between the tires to protect the wheels from becoming scratched.

## Windshield washer fluid

### ■ Checking the windshield washer fluid level

#### ▼ Checking by the windshield washer fluid warning light

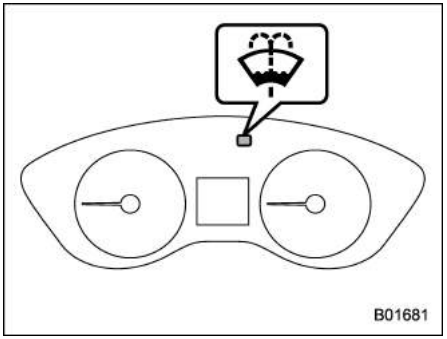


**Windshield washer fluid warning light (type A)**

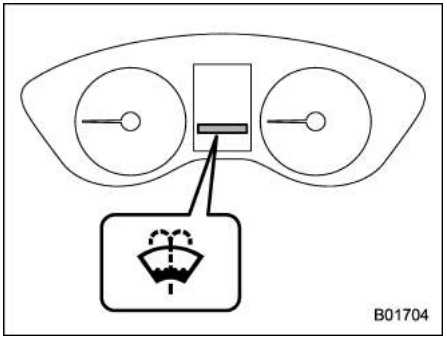


**Windshield washer fluid warning light (type B)**

Check the windshield washer fluid warning light. When the light illuminates, there is only a small amount of washer fluid remaining. In this case, refill the washer fluid.

### ■ Adding the windshield washer fluid

**⚠ CAUTION**

**Never use engine coolant as washer fluid because it could cause paint damage.**

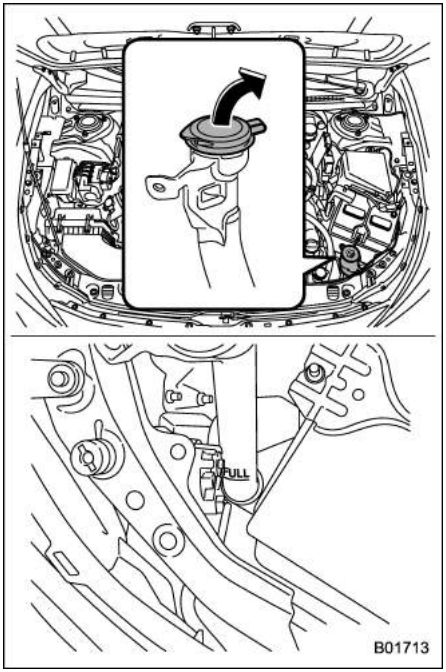


Remove the washer tank filler cap, then add windshield washer fluid until it reaches the “FULL” mark on the tank.

## ■ Windshield washer fluid

Use windshield washer fluid. If windshield washer fluid is unavailable use clean water.

In areas where water freezes in winter, use an anti-freeze type windshield washer fluid.

If you fill the reservoir tank with a fluid with a different concentration from the one used previously, purge the old fluid from the piping between the reservoir tank and washer nozzles by operating the washer for a certain period of time. Otherwise, if the concentration of the fluid remaining in the piping is too low for the outside temperature, it may freeze and block the nozzles.

**⚠ CAUTION**

**Adjust the washer fluid concentration appropriately for the outside temperature. If the concentration is inappropriate, sprayed washer fluid may freeze on the windshield and obstruct your view, and the fluid may freeze in the reservoir tank.**

# Replacement of wiper blades

Grease, wax, insects, or other material on the windshield or the wiper blade results in jerky wiper operation and streaking on the glass. If you cannot remove the streaks after operating the windshield washer or if the wiper operation is jerky, clean the outer surface of the windshield (or rear window) and the wiper blades using a sponge or soft cloth with a neutral detergent or mild-abrasive cleaner. After cleaning, rinse the windshield and wiper blades with clean water. The windshield is clean if beads do not form when you rinse the windshield with water.

**⚠ CAUTION**

- **Do not clean the wiper blades with fuel or a solvent, such as paint thinner or benzine. This will cause deterioration of the wiper blades.**
- **While removing the wiper blades from the wiper arms, do not return the wiper arms to the original positions. Otherwise, the windshield surface may be scratched.**
- **When returning the raised wiper arms to the original positions,**

– CONTINUED –

**carefully return the wiper arms on the windshield by hand. You should not return the wiper arms to the windshield only by the return spring. Otherwise, the wiper arms may be deformed and/or the windshield surface may be scratched.**

- **When you are going to raise the passenger-side wiper arm, first raise the driver-side wiper arm. Otherwise, the passenger-side wiper assembly and driver-side wiper assembly will touch each other, possibly resulting in scratches.**
- **Return the passenger-side wiper arm to its original position before returning the driver-side wiper arm to its original position. Otherwise, the passenger-side wiper assembly and driver-side wiper assembly will touch each other, possibly resulting in scratches.**

If you cannot eliminate the streaking even after following this method, replace the wiper blades using the following procedures.

## ■ Windshield wiper blade assembly

### NOTE

**Do not lower the wiper arm while the wiper blade assembly is removed.**

1. Raise the wiper arm off the windshield.

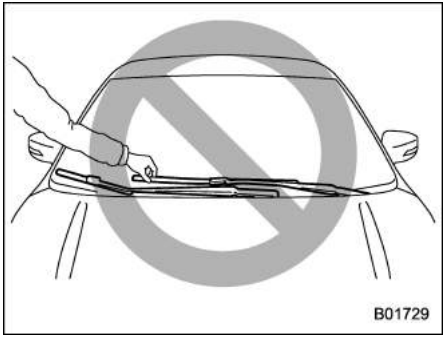


### ⚠ CAUTION

**Hold the wiper arm when replacing the wiper blade. Holding the wiper blade, may result in blade deformation.**

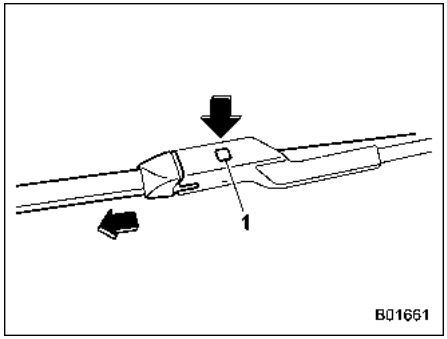


1) Lock knob

2. Hold the wiper blade connection by hand, push the lock knob to release the lock, and then pull out the wiper blade assembly.

### NOTE

**Do not use a hard object to push the lock knob. The lock knob may be scratched.**

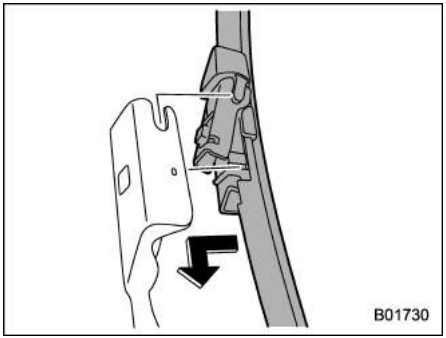


3. When installing the wiper blade assembly, align it with the wiper arm connection part and then slide it in the opposite direction of removal to install. After installing the wiper blade assembly, check that the connection part is locked completely.

4. Hold the wiper arm by hand and slowly lower it in position.

## ■ Window wiper blade rubber

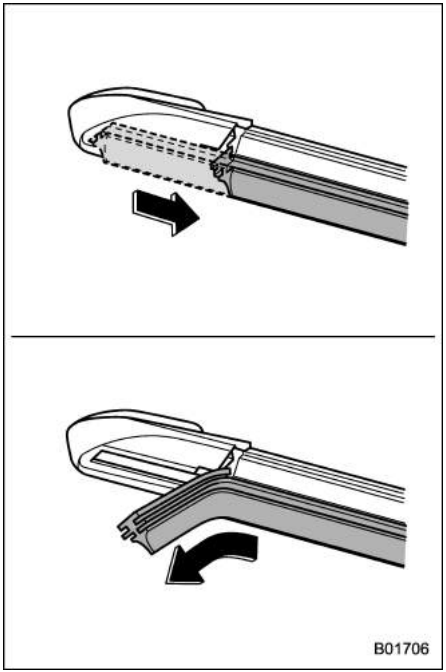


Replace the wiper blade rubber according to the following procedure.

1. Pull the wiper blade rubber until the slit on the underside of the wiper blade is in the removal position, as shown in the illustration, so that it can be removed.

2. Pull the end of the wiper blade rubber through the slit to remove it.

3. To install a new wiper blade rubber, perform the removal procedure in the reverse order. After installation, check that the tip of the wiper rubber has reached the end of the cap.

### NOTE

**It may be difficult to perform the wiper blade rubber replacement. We recommend that you contact your SUBARU dealer for wiper blade rubber replacement if necessary.**

– CONTINUED –

## ■ Rear window wiper blade assembly

1. Raise the wiper arm off the rear window.

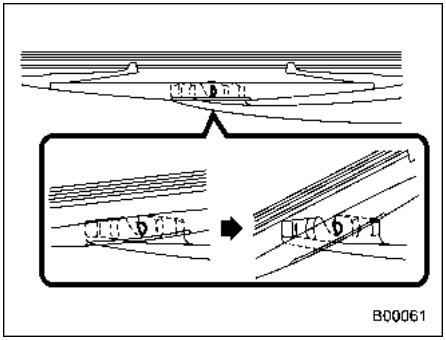


2. Turn the wiper blade assembly counterclockwise.

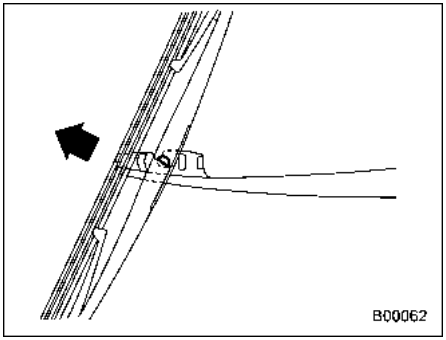


3. Pull the wiper blade assembly toward you to remove it from the wiper arm.
4. Install the wiper blade assembly to the wiper arm. Make sure that it locks in place.
5. Hold the wiper arm by hand and slowly lower it in position.

## ■ Rear window wiper blade rubber

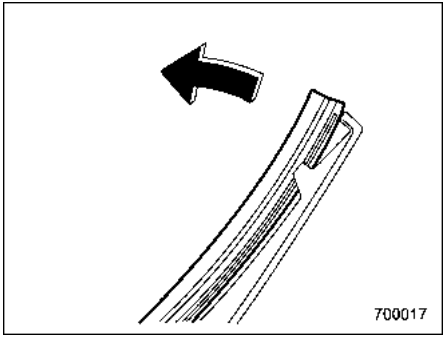


1. Pull out the end of the blade rubber assembly to unlock it from the plastic support.

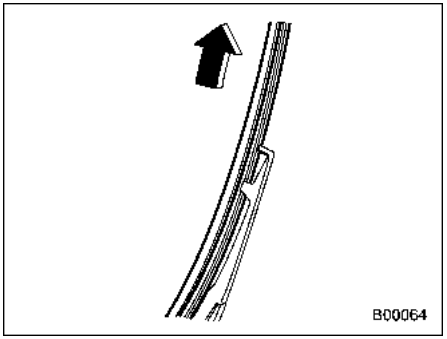


2. Pull the blade rubber assembly out of the plastic support.

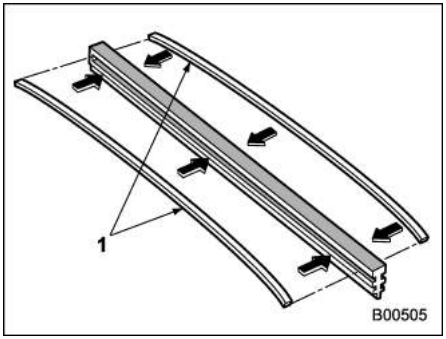


1) Metal spines

3. If the new blade rubber is not provided with two metal spines, remove the metal spines from the old blade rubber and install them in the new blade rubber.

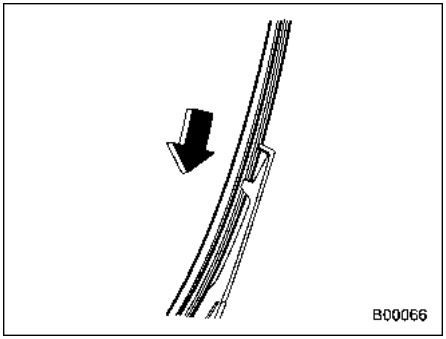


4. Align the claws of the plastic support with the grooves in the blade rubber assembly, then slide the blade rubber assembly into place.

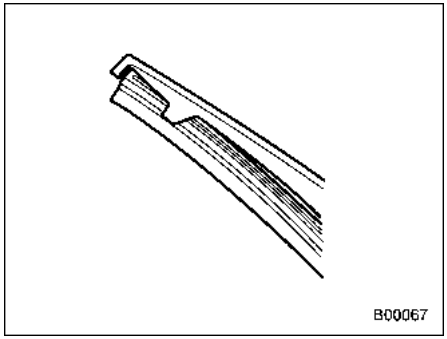


Securely retain both ends of the rubber with the stoppers on the plastic support ends. If the rubber is not retained properly, the wiper may scratch the rear window glass.

5. Install the wiper blade assembly to the wiper arm. Make sure that it locks in place.

6. Hold the wiper arm by hand and slowly lower it in position.

# Battery

## ■ Battery Precautions!

**WARNING**

**Read these instructions carefully:**

**To ensure safe and correct handling of your battery, read the following precautions carefully before using the battery or inspecting it.**

**Wear eye protection:**

**Always wear eye protection when working near your vehicle's battery. Battery fluid contains sulfuric acid, so it can cause blindness if splashed into your eyes. Also, batteries emit highly flammable, explosive hydrogen gas. Eye protection is vital for protection in the event that this gas ignites.**

**Battery fluid contains sulfuric acid:**

**Since battery fluid contains sulfuric acid, be sure to wear eye protection and protective gloves when inspecting your vehicle's battery. Avoid tipping the battery and subjecting it to shocks since this could cause fluid to spill.**

**Under no circumstances allow battery fluid to make contact with your skin, eyes, or clothing since this can cause blindness and burns. If battery fluid splashes onto your skin, eyes or clothing, wash it away immediately with plenty of water. If battery fluid splashes into your eyes, seek medical attention immediately.**

**If battery fluid is accidentally swallowed, immediately drink a large amount of milk or water, and seek medical attention immediately.**

**Battery fluid is corrosive. If it splashes onto your vehicle's paintwork or fabrics, wash it away immediately with plenty of water.**

**Keep children away:**

**Batteries must be handled only by persons who are aware of the potential hazards. Take particular care to keep children away from your vehicle's battery. Improper handling can cause blindness and burns.**

**Keep flames away:**

**Before working on or near your vehicle's battery, extinguish all cigarettes, matches, and lighters. Also, keep the battery away from flammable items and electrical sparks. Since batteries emit highly flammable, explosive hydrogen gas, any flames or sparks in the vicinity could cause an explosion.**

**When working near your vehicle's battery, take care that metal tools do not short-circuit the battery's (+) and (−) terminals or connect the battery's (+) terminal to the vehicle's body. A short circuit could create electrical sparks and lead to an explosion.**

**To prevent electrical sparks, all rings, wristwatches, and other metal accessories must be taken off before work is carried out on or near the battery.**

**Prevent explosions:**

**While being charged, batteries emit highly flammable, explosive hydro-**

**gen gas. To prevent an explosion, charge your vehicle's battery in a well ventilated area and keep flames away.**

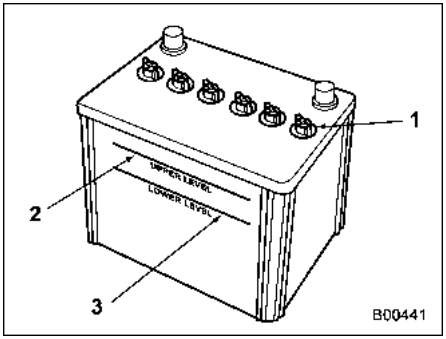


1) Cap
2) Upper level
3) Lower level

It is unnecessary to periodically check the battery fluid level or periodically refill with distilled water.

However, if the battery fluid level is below the lower level, remove the cap. Fill to the upper level with distilled water.

**CAUTION**

**Never use more than 10 amperes when charging the battery because it will shorten battery life.**

## Fuses

**CAUTION**

**Never replace a fuse with one having a higher rating or with material other than a fuse because serious damage or a fire could result.**

The fuses are designed to melt during an overload to prevent damage to the wiring harness and electrical equipment. The fuses are located in two fuse boxes.

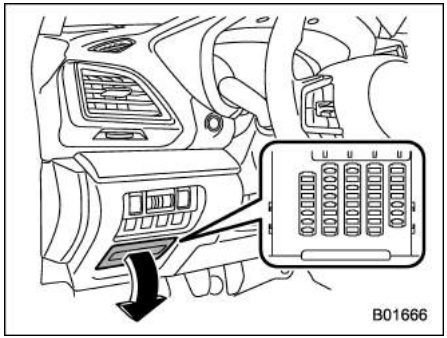


One is located under the instrument panel behind the fuse box cover on the driver's seat side. To remove the cover, pull it out.

– CONTINUED –

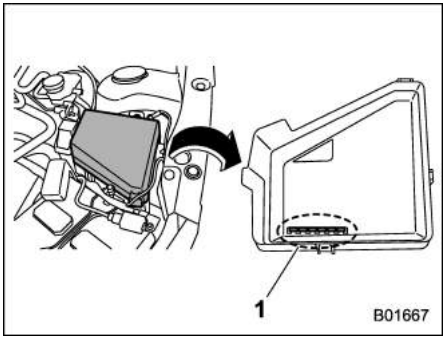


1) Spare fuses

The other one (main fuse box) is housed in the engine compartment. The spare fuses are stored in the fuse box cover.

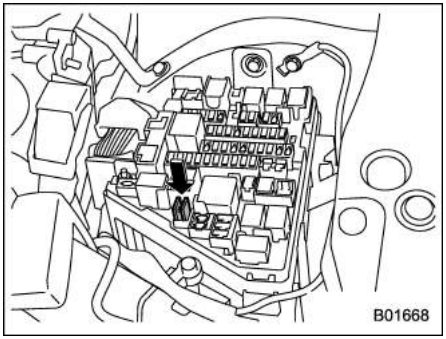


The fuse puller is stored in the main fuse box in the engine compartment.

Pinch the upper part of the fuse puller when removing it from the main fuse box.

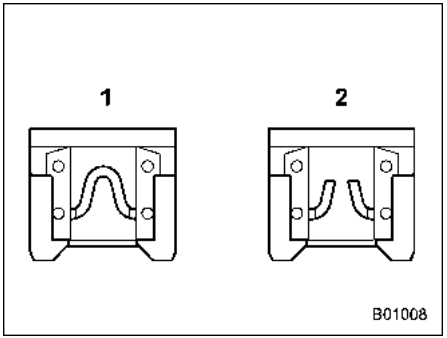


1) Good
2) Blown

If any lights, accessories or other electrical controls do not operate, inspect the corresponding fuse. If a fuse has blown, replace it.

1. Turn the ignition switch to the “LOCK”/ “OFF” position and turn off all electrical accessories.
2. Remove the cover.
3. Determine which fuse may be blown. Look at the back side of each fuse box cover and refer to “Fuses and circuits” ☞12-10.

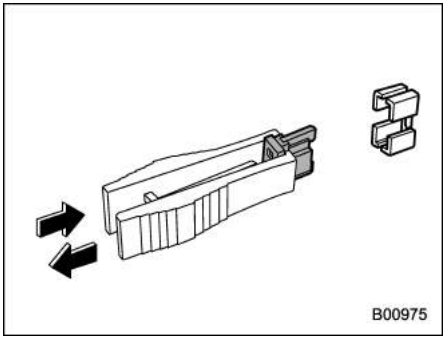


4. Pull out the fuse with the fuse puller.
5. Inspect the fuse. If it has blown, replace it with a spare fuse of the same rating.
6. If the same fuse blows again, this indicates that its system has a problem. We recommend that you contact your SUBARU dealer for repairs.

## Installation of accessories

We recommend that you always consult your SUBARU dealer before installing fog lights or any other electrical equipment in your vehicle. Such accessories may cause the electronic system to malfunction if they are incorrectly installed or if they are not suited for the vehicle. We recommend that you install only genuine SUBARU accessories on your vehicle.

Also, we recommend that you always consult your SUBARU dealer before installing a radio in your vehicle.

## Replacing bulbs

It may be difficult to replace the bulbs. We recommend that you have the bulbs replaced by your SUBARU dealer if necessary.

**WARNING**

**Bulbs may become very hot while illuminated. Before replacing bulbs, turn off the lights and wait until the bulbs cool down. Otherwise, there is the risk of sustaining a burn injury.**

**CAUTION**

**Replace any bulb only with a new bulb of the specified wattage. Using a bulb of different wattage could result in a fire. For the specified wattage of each bulb, refer to "Bulb chart" ☞12-14.**

**Do not touch the glass portion of the light bulb with bare hands. When holding the glass portion is unavoidable, hold it with a clean dry cloth to avoid getting moisture and grease on the bulb. If there are any fingerprints or grease on the bulb surface, wipe them away with a soft cloth moistened with alcohol. Also, if the bulb is scratched or dropped, it may blow out or crack.**

### ■ Headlights (models with LED headlights)

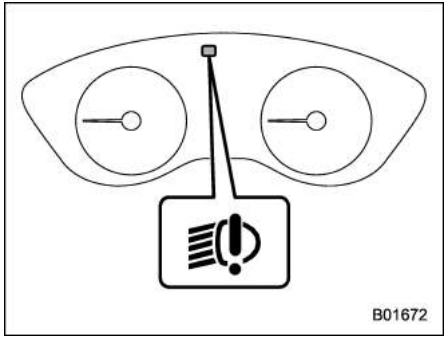


**LED headlight warning light (type A)**

– CONTINUED –

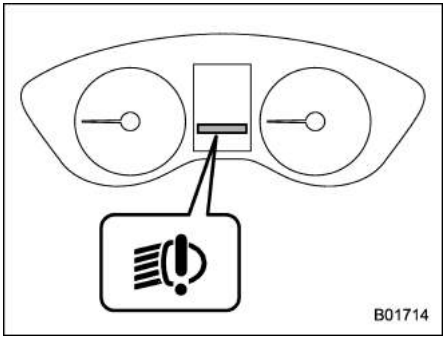


**LED headlight warning light (type B)**

The LED headlight warning light illuminates if the LED headlights malfunction. We recommend that you have your vehicle inspected at a SUBARU dealer as soon as possible.

## ■ Headlights (models with halogen headlights)

**⚠ CAUTION**

**Halogen headlight bulbs become very hot while in use. If you touch the bulb surface with bare hands or greasy gloves, fingerprints or grease on the bulb surface will develop into hot spots, causing the bulb to break. If there are fingerprints or grease on the bulb surface, wipe them away with a soft cloth moistened with alcohol.**

## NOTE

- **If headlight aiming is required, we recommend that you consult your SUBARU dealer for proper adjustment of the headlight aim.**
- **It may be difficult to replace the bulbs. We recommend that you have the bulbs replaced by your SUBARU dealer if necessary.**

### ▼ High and Low beam light bulbs

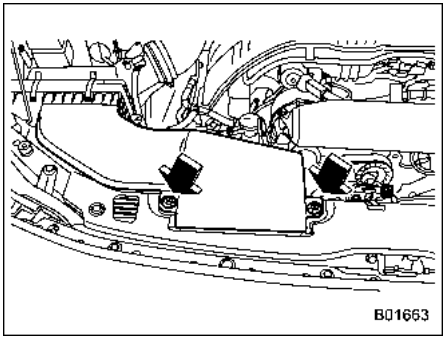


**Right-hand side**

1. Use a screwdriver to undo the clips on the air intake duct, then remove the air intake duct.

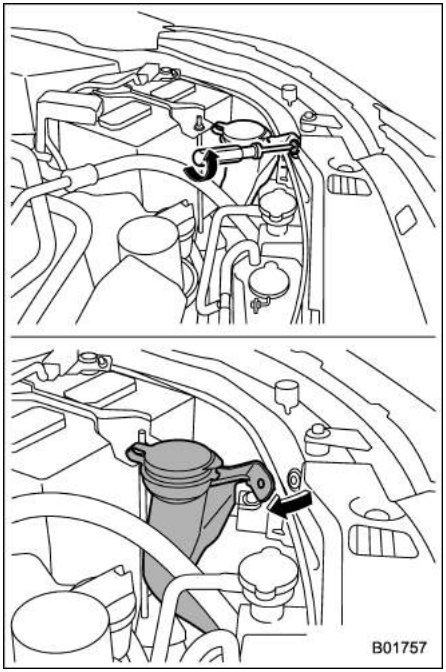


**Left-hand side**

2. Use a screwdriver to remove the secured clip of the washer tank. To make it easy to access the bulb, turn the neck of the washer fluid filler pipe as illustrated.

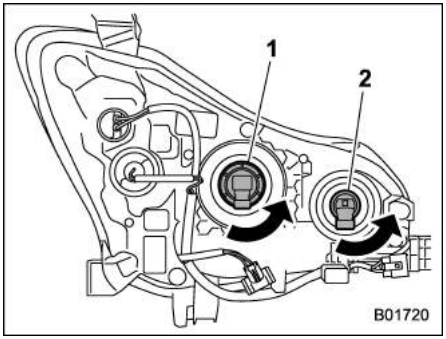


1) Low beam bulb
2) High beam bulb

3. Disconnect the electrical connector from the bulb and remove the bulb from the headlight assembly by turning it counterclockwise.
4. Replace the bulb with new one. At this time, use care not to touch the bulb surface.
5. To install the bulb to the headlight assembly, turn it clockwise until it clicks.
6. Reconnect the electrical connector.
7. Install the air intake duct with clips.
8. Set the washer tank to the original place and secure it by clip.

## ■ Front turn signal light (models with LED headlights)

### NOTE

**It may be difficult to replace the bulbs. We recommend that you have the bulbs replaced by your SUBARU dealer if necessary.**

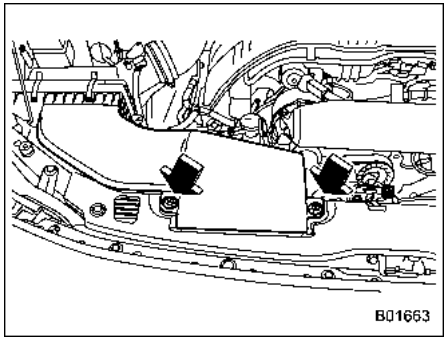


**Right-hand side**

1. Use a screwdriver to undo the clips on the air intake duct, then remove the air intake duct.

– CONTINUED –

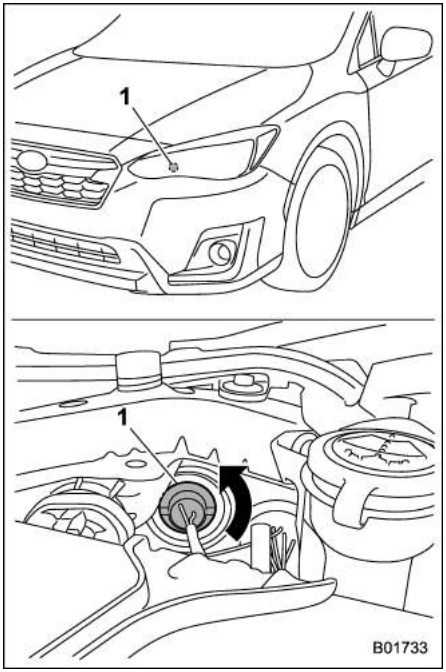


1) Turn signal light

2. Turn the socket counterclockwise and pull it out.
3. Pull out the bulb from the socket and replace the bulb with a new one.
4. Set the bulb socket into the headlight assembly and turn it clockwise until it locks.
5. Install the air intake duct with clips.

## ■ Front turn signal light and position light (models with halogen headlights)

### NOTE

- **It may be difficult to replace the bulbs. We recommend that you have the bulbs replaced by your SUBARU dealer if necessary.**
- **The bulbs used for the position light emit light that is whiter than conventional bulbs. We recommend that you consult your SUBARU dealer for replacement.**

1. Start the engine and turn the steering wheel fully in the opposite direction of the bulb to be replaced.
2. Stop the engine.

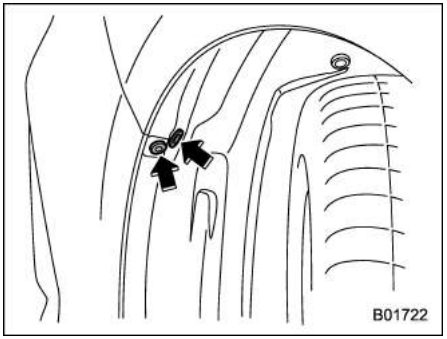


3. Remove the 2 clips from the fender lining.

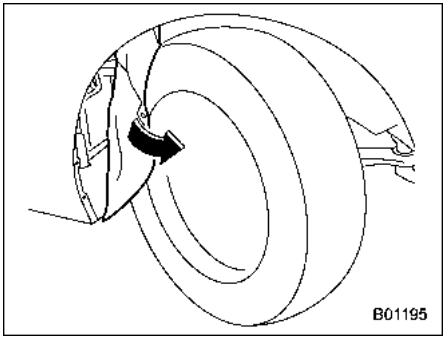


4. Pull off the fender lining.

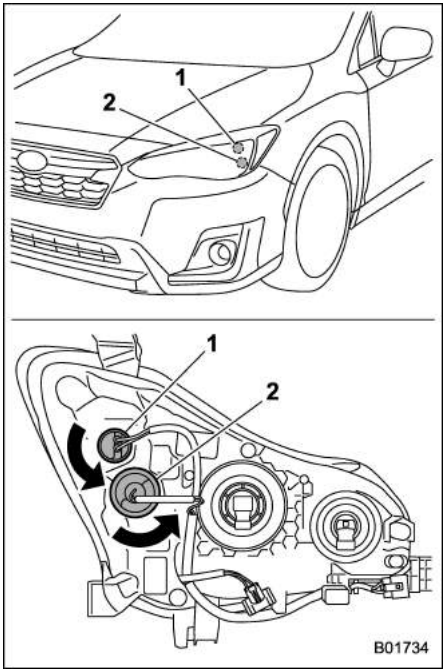


1) Position light
2) Turn signal light

5. Turn the socket counterclockwise and pull it out.
6. Pull out the bulb from the socket and replace the bulb with a new one.

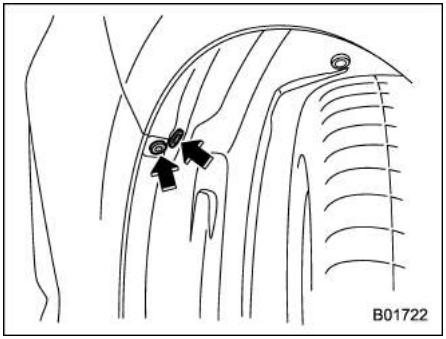


7. After replacing the bulb, reattach the fender lining.

## ■ Front fog light (models with LED front fog light)

We recommend that you have the front fog light assembly checked by your SUBARU dealer.

## ■ Front fog light and daytime running light (if equipped)

### NOTE

**It may be difficult to replace the bulbs. We recommend that you have the bulbs replaced by your SUBARU dealer if necessary.**

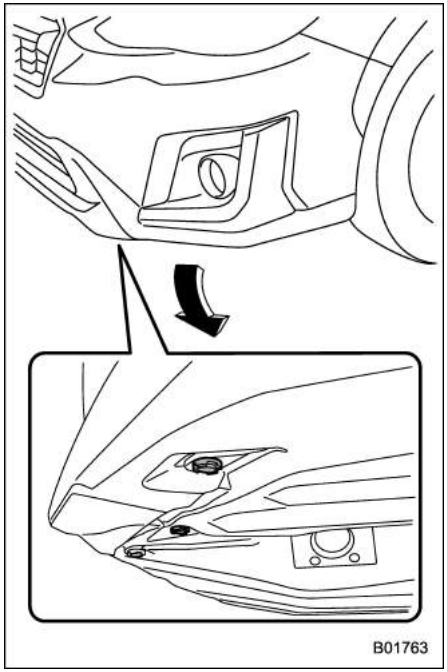


1. Remove the 2 clips and turn over the mud guard.
2. Disconnect the electrical connector from the bulb.

– CONTINUED –

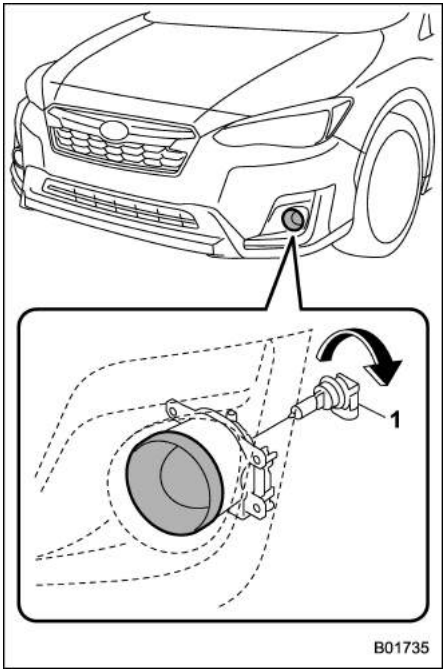


**Type A**
1) Fog light

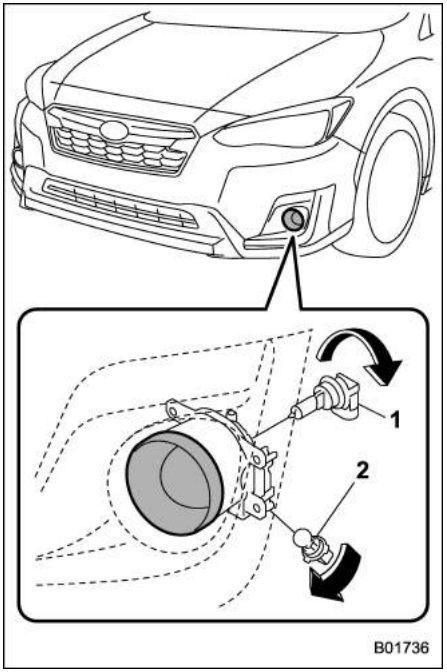


**Type B**
1) Fog light
2) Daytime running light

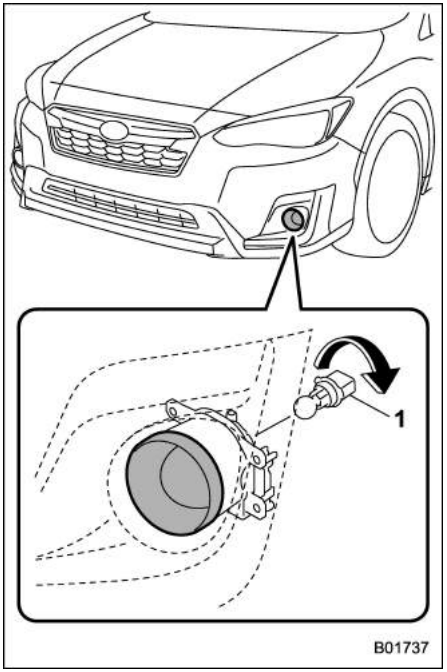


**Type C**
1) Daytime running light

3. Remove the bulb.
4. Replace the bulb with a new one.
5. After replacing the bulb, reattach the mud guard.

## ■ Side turn signal light (if equipped)

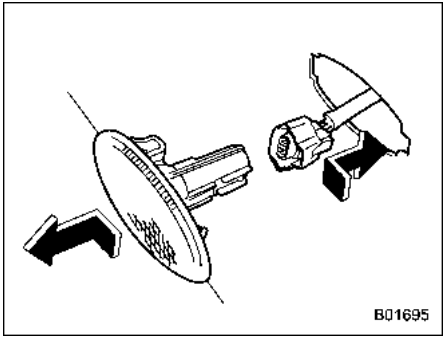


1. Push the lens of the side turn signal light forward and remove it.
2. Pull the connector out of the socket.

### NOTE

**The bulb is an integral part of the side turn signal light assembly. If the bulb fails, the whole side turn signal light assembly must be replaced.**

## ■ Rear combination lights

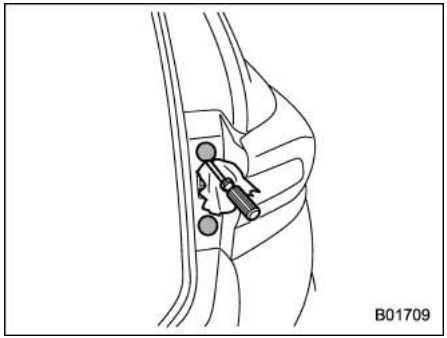


1. Remove the covers.

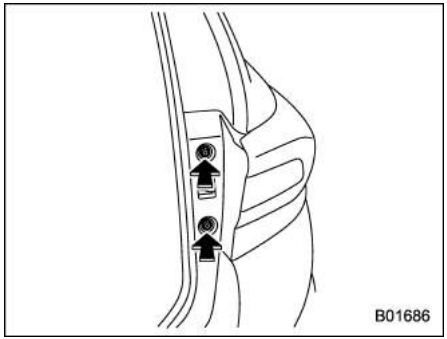


2. Using a Phillips screwdriver, remove the upper and lower screws that secure the rear combination light assembly.

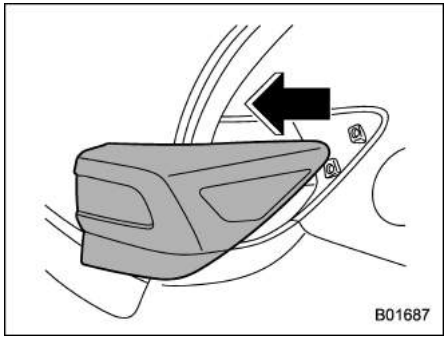


3. Slide the rear combination light assembly rearward and remove it from the vehicle.

– CONTINUED –

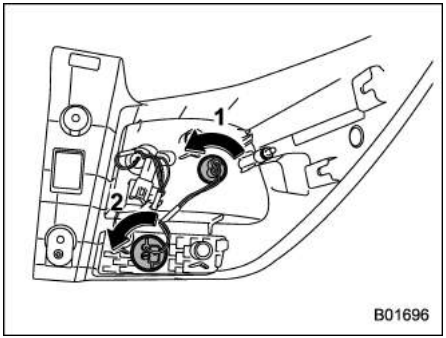


1) Tail light
2) Rear turn signal light

4. Remove the bulb socket from the rear combination light assembly by turning it counterclockwise.
5. Pull the bulb out of the bulb socket and replace it with a new one.
6. Set the bulb socket into the rear combination light assembly and turn it clockwise until it locks.

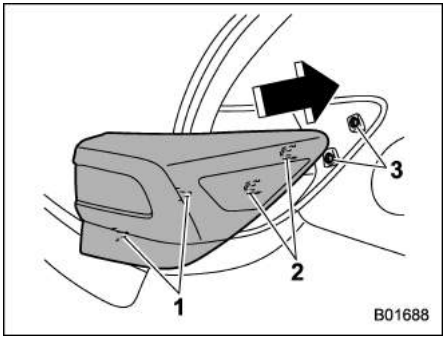


1) Guide pins
2) Catch
3) Clip

7. Put the rear combination light assembly into place while aligning the 2 guide pins and a catch with the guide holes and a clip on the vehicle.

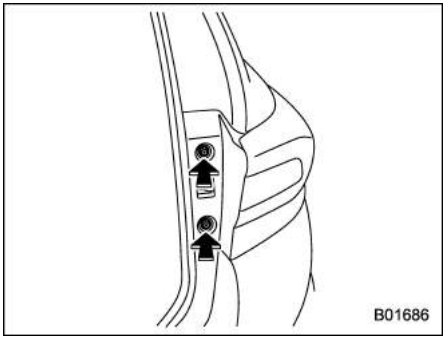


8. Tighten the upper and lower screws.
9. Reinstall the covers.

## ■ Back-up light

### NOTE

**It may be difficult to replace the bulbs. We recommend that you have the bulbs replaced by your SUBARU dealer if necessary.**

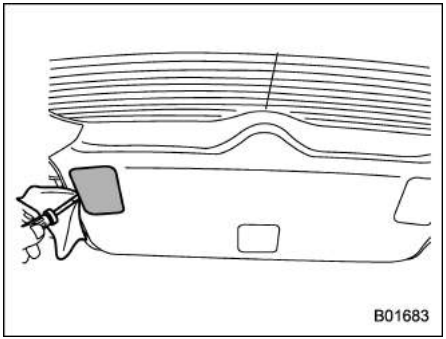


1. Apply a flat-head screwdriver to the light cover as shown in the illustration, and pry the light cover off from the rear gate trim.

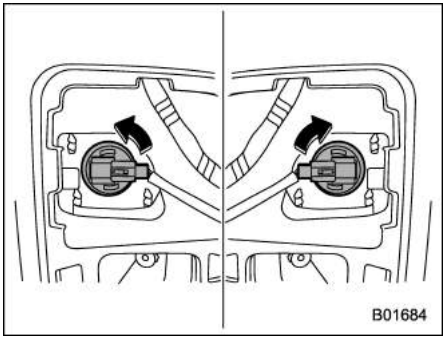


2. For left side light, turn the bulb socket clockwise and remove it.
For right side light, turn the bulb socket counterclockwise and remove it.

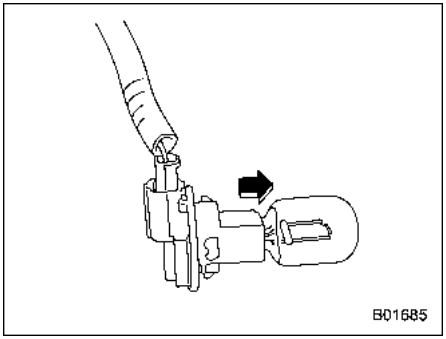


3. Pull the bulb out of the bulb socket and replace it with a new one.
4. Install the bulb socket by turning it clockwise.
5. Install the light cover on the rear gate.

## ■ License plate light

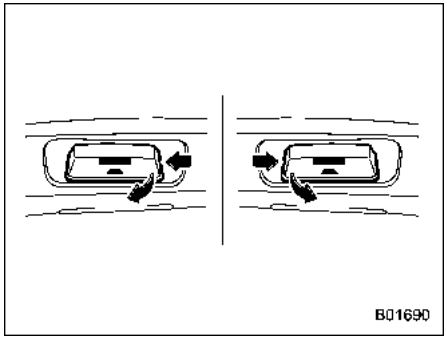


1. License plate light must be pushed outwards, then pulled out to be removed.

– CONTINUED –

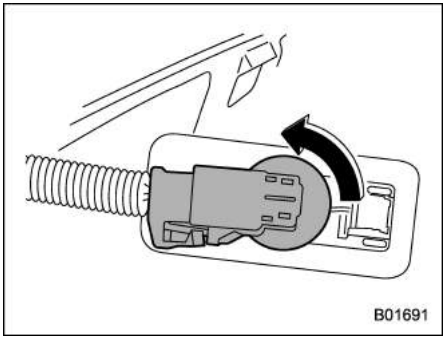


2. Turn the bulb socket counterclockwise and pull out the socket.
3. Pull the bulb out of the socket.
4. Install a new bulb.
5. Reinstall the bulb socket and the license plate light cover.

## ■ Rear fog light (if equipped)

### NOTE

**It may be difficult to replace the bulb. We recommend that you have the bulb replaced by your SUBARU dealer if necessary.**

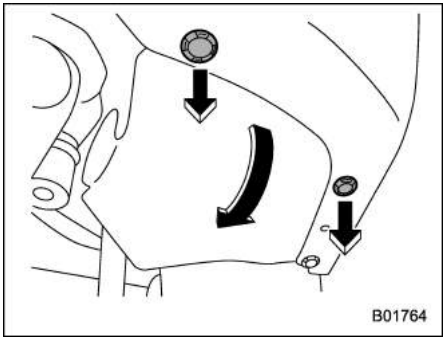


1. Remove the 2 clips and turn over the mud guard.

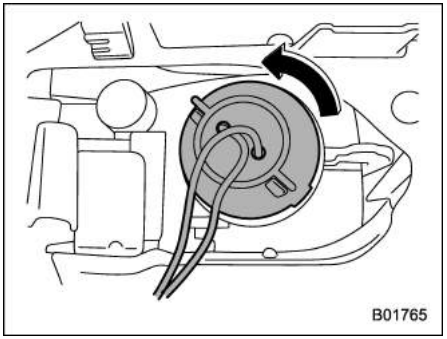


2. Turn the bulb socket counterclockwise and pull it out.
3. Remove the bulb.
4. Replace the bulb with a new one.
5. After replacing the bulb, reattach the mud guard.

## Map light

**CAUTION**

**Replacing the bulb could cause burns since the bulb may be very hot. Have the bulb replaced by your SUBARU dealer.**

## Vanity mirror light (if equipped)

**CAUTION**

**Replacing the bulb could cause burns since the bulb may be very hot. Have the bulb replaced by your SUBARU dealer.**

## Dome light and cargo area light

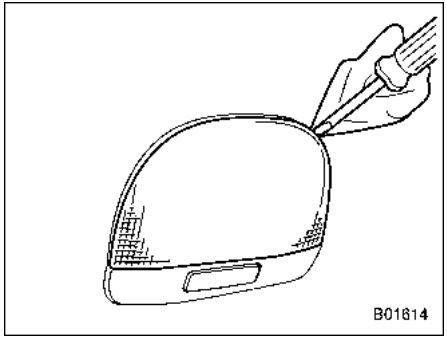


**Dome light**

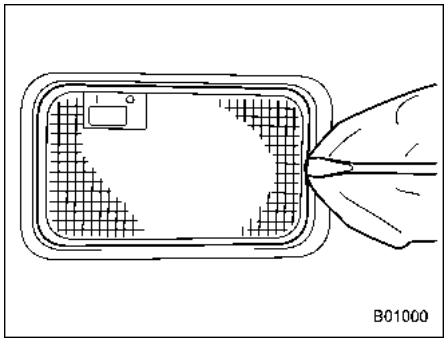


**Cargo area light**

1. Remove the lens by prying the edge of the lens with a flat-head screwdriver.
2. Pull the bulb out of the socket.
3. Install a new bulb.
4. Reinstall the lens.

## Other bulbs

**It may be difficult to replace the bulbs. We recommend that you have the bulbs replaced by your SUBARU dealer if necessary.**

## Replacing key battery

The access key fob/transmitter battery may be discharged under the following conditions.

- The operation of the keyless access function is unstable
- The operating distance of the remote keyless entry system is unstable
- The transmitter does not operate properly when used within the standard distance

Replace the battery with a new one.

### ■ Safety precautions

**WARNING**

**Do not ingest the battery, Chemical Burn Hazard**

**(The remote control supplied with) This product contains a coin/button cell battery. If the coin/button cell battery is swallowed, it can cause severe internal burns in just 2 hours and can lead to death.**

**Keep new and used batteries away from children.**

**If the battery compartment does not close securely, stop using the product and keep it away from children.**

**If you think batteries might have been swallowed or placed inside any part of the body, seek immediate medical attention.**

**CAUTION**

**This symbol is intended to alert the user to the presence of important operating and maintenance (servicing) instructions in the literature accompanying the appliance.**

- **Do not let dust, oil or water get on or in the access key fob/transmitter when replacing battery.**
- **Before replacing the battery, remove any static electricity.**
- **Be careful not to touch or damage the printed circuit board in the access key fob/transmitter when replacing the battery.**
- **Be careful not to allow children to touch the battery and any removed parts; children could swallow them.**
- **Danger of explosion if battery is incorrectly replaced. Replace only with the same or equivalent type.**
- **Do not exposed to excessive heat such as sunshine, fire or the like.**

**NOTE**

- **Replace only with the same or equivalent type of battery recommended by the manufacturer.**
- **Dispose of used batteries according to local laws.**
- **Mount the battery in the correct orientation to prevent fluid leakage. Be careful not to bend the terminals. It may result in a malfunction.**
- **It is recommended that the battery be replaced by a SUBARU dealer.**
- **Use a new battery.**
- **After replacing the battery, confirm that the transmitter functions properly.**

## ■ Replacing battery of access key fob

**⚠ CAUTION**

**When removing or reinstalling the access key fob cover, make sure that the plastic part does not come off or become misaligned.**

**Battery: Button battery CR2032 or equivalent**

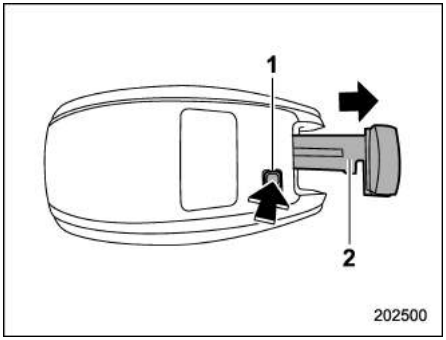


1) Release button
2) Emergency key

1. Take out the emergency key.

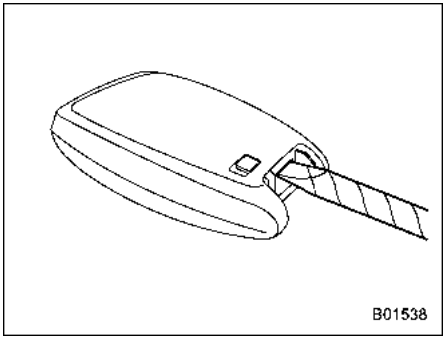


2. Wrap a flat-head screwdriver with vinyl tape or a cloth, and insert it in the gap to remove the cover.

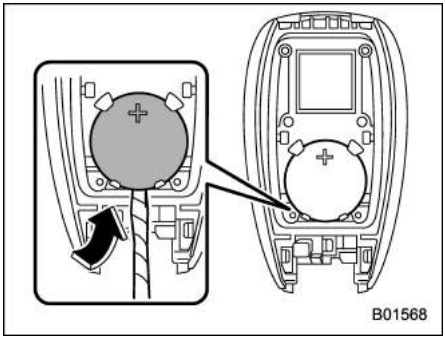


3. Take out the battery using a flat-head screwdriver with vinyl tape or a cloth.

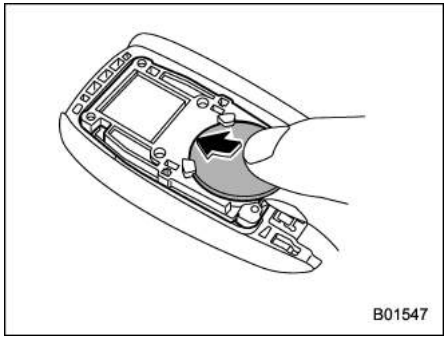


4. Insert a new battery with its positive (+) side facing upward as shown in the figure.

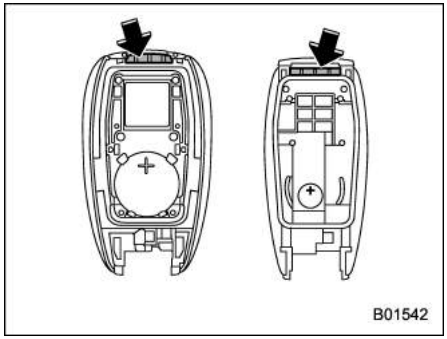


5. Attach the cover to the access key fob by fitting the projections and recesses together.

– CONTINUED –

## ■ Replacing battery of transmitter

**Battery: Button battery CR1620**

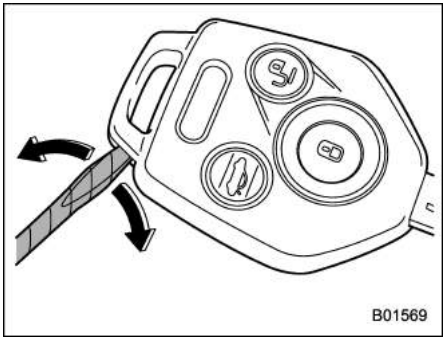


1. Wrap a flat-head screwdriver with vinyl tape or a cloth. Open the key head using the flat-head screwdriver.

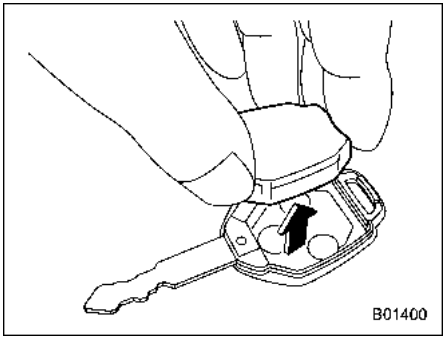


2. Remove the transmitter case from the key head.

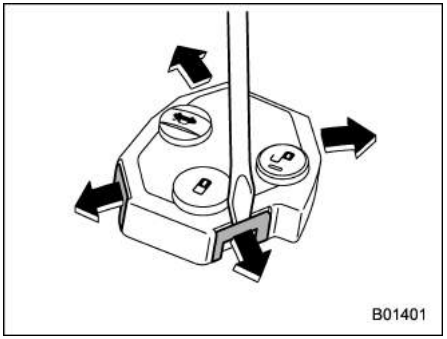


3. Open the transmitter case by releasing the hooks.

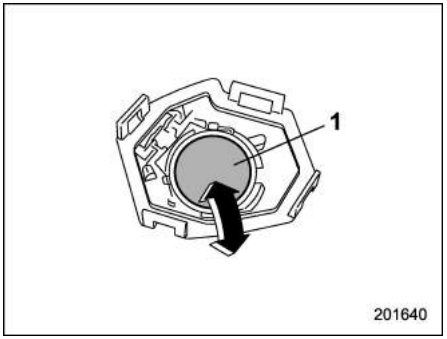


1) Negative (−) side facing up

4. Replace the old battery with a new battery (type **CR1620** or equivalent) making sure to install the new battery with the negative (−) side facing up.
5. Put together the transmitter case by fitting the hooks on the case.
6. Reinstall the transmitter case in the key head.
7. Refit the removed half of the key head.

Specifications ..... 12-2
Dimensions ..... 12-2
Engine ..... 12-3
Fuel ..... 12-3
Engine oil ..... 12-4
Front differential and rear differential gear oil ..... 12-6
Fluids ..... 12-8
Engine coolant ..... 12-8
Electrical system ..... 12-9
Tires ..... 12-9
Temporary spare tires ..... 12-9
Brake disc ..... 12-9
Fuses and circuits ..... 12-10
Fuse panel located in the passenger compartment ..... 12-10
Fuse panel located in the engine compartment ... 12-12
Bulb chart ..... 12-14
Safety precautions ..... 12-14
Bulb chart ..... 12-15
Vehicle identification ..... 12-18
For vehicle body ..... 12-18

# Specifications

The following specifications are subject to change without notice.

## ■ Dimensions

mm (in)

| Item | | |
|---|---|---|
| Overall length | | 4,465 (175.8) |
| Overall width | | 1,800 (71.0) |
| Overall height | | 1,615 (63.6)*1<br>1,595 (62.8)*2 |
| Wheel base | | 2,665 (104.9) |
| Tread | Front | 1,550 (61.0) |
| | Rear | 1,555 (61.2) |
| Ground clearance*3 | | 220 (8.7) |

*1: Models with roof rails
*2: Models without roof rails
*3: Measured with vehicle empty

## ■ Engine

| Engine model | FB16<br>(1.6 L, DOHC, non-turbo) | FB20<br>(2.0 L, DOHC, non-turbo) |
|---|---|---|
| Engine type | Horizontally opposed, liquid cooled 4 cylinder, 4-stroke petrol engine | |
| Displacement cc | 1,600 | 1,995 |
| Bore × Stroke mm (in) | 78.8 × 82.0<br>(3.10 × 3.23) | 84.0 × 90.0<br>(3.31 × 3.54) |
| Compression ratio | 11.0 : 1 | 12.5 : 1 |
| Firing order | 1 – 3 – 2 – 4 | |

## ■ Fuel

| Fuel requirements* | | | Fuel tank capacity |
|---|---|---|---|
| For Australia | Fuel type | Unleaded petrol | 63 liters (16.6 US gal, 13.9 Imp gal) |
| | Research Octane Number (RON) | 91 or higher | |
| | Ethanol content in fuel | Up to 10%. | |
| For Europe | Fuel type | Unleaded petrol | |
| | Research Octane Number (RON) | 95 or higher | |
| | Ethanol content in fuel | Up to 10% or E5, E10 labeled fuel | |
| For Other areas | Fuel type | Unleaded petrol | |
| | Research Octane Number (RON) | 95 or higher | |
| | Ethanol content in fuel | Up to 10%. | |

*: For details, refer to “Fuel” ☞7-3.

– CONTINUED –

## ■ Engine oil

For the checking, adding and replacing procedure or other details, refer to “Engine oil” ☞11-14.

## NOTE

**The procedure for changing the engine oil and oil filter should be performed by a properly-trained expert. It is recommended that you have this service performed by your SUBARU dealer.**

### ▼ Approved engine oil

Always use the SUBARU approved engine oil. For further details, we recommend that you contact your SUBARU dealer.
If the approved engine oil is unavailable, use the alternative engine oil described on the next page.

### ▼ Alternative engine oil

If the SUBARU approved oil is unavailable, the following alternative oil can be used.

## NOTE

**Each quantity indicated here is only a guideline. The necessary quantity for replacement may differ slightly depending on the temperature and other factors.**

| Oil grade | SAE viscosity No. and applicable temperature | Oil capacity |
|---|---|---|
| API (American Petroleum Institute) classification **SN** with the words “RESOURCE CONSERVING”<br>**or**<br>ILSAC (International Lubricant Specification Advisory Committee) **GF-5**, which can be identified with the ILSAC certification mark (Starburst mark)<br>**or**<br>ACEA (Association des Constructeurs Europeens d’Automobiles) specification A3 or A5 | · 0W-20*<br>· 5W-30<br>· 5W-40<br>°C -30 -20 -10 0 10 20 30 40<br>°F -20 0 20 40 60 80 100<br>0W-20*<br>5W-30, 5W-40<br>ZOM0333<br>*: Equivalent to factory-filled oil | – Adding the oil from L to F level: 1.0 liter (1.1 US qt, 0.9 Imp qt)<br>– Changing the oil and oil filter: 4.4 liters (4.7 US qt, 3.9 Imp qt) |

– CONTINUED –

## ■ Front differential and rear differential gear oil

| Oil | Front differential gear oil |
|---|---|
| Oil grade | ● SUBARU Extra MT*3<br>● API classification GL-5 (75W-90) |
| Oil capacity*1 | 1.3 liters (1.4 US qt, 1.1 Imp qt) |
| Remarks*2 | “Front differential gear oil (all models) and rear differential gear oil (AWD models)” ☞11-22 |

*1: The indicated oil quantity is only a guideline. The necessary quantity for replacement may differ slightly depending on the temperature and other factors. After refilling the gearbox with oil, the oil level should be checked.
*2: For more details about maintenance and service, refer to the indicated section.
*3: Equivalent to factory-filled oil.

| | | |
|---|---|---|
| Oil | Rear differential gear oil (AWD models) | |
| Oil grade | Except Australia models | Australia models |
| | ● SUBARU Extra MT*1<br>● API classification GL-5 (75W-90) | API classification GL-5 |
| SAE viscosity No. and applicable temperature | – | ● 75W-90*<br>● 90<br> 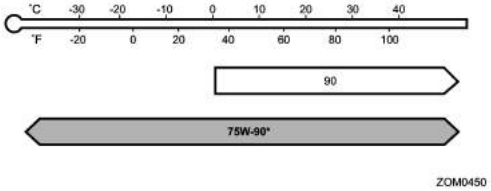 <br><br>*: Recommended |
| Oil capacity*2 | 0.8 liters (0.8 US qt, 0.7 Imp qt) | |
| Remarks*3 | “Front differential gear oil (all models) and rear differential gear oil (AWD models)” ☞11-22 | |

*1: Equivalent to factory-filled oil.
*2: The indicated oil quantity is only a guideline. The necessary quantity for replacement may differ slightly depending on the temperature and other factors. After refilling the gearbox with oil, the oil level should be checked.
*3: For more details about maintenance and service, refer to the indicated section.

– CONTINUED –

## ■ Fluids

| Fluid | Fluid type*1 | Fluid capacity*2 | Remarks*3 |
|---|---|---|---|
| Continuously variable transmission fluid | We recommend that you consult your SUBARU dealer. | Models without Auto Start Stop systems: 10.7 liters (11.3 US qt, 9.4 Imp qt)<br>Models with Auto Start Stop systems: 10.8 liters (11.4 US qt, 9.5 Imp qt) | “Continuously variable transmission fluid” ☞11-21 |
| Brake fluid | FMVSS No. 116, DOT 3 or DOT 4 brake fluid | – | “Brake fluid” ☞11-22 |

*1: Use one of the indicated types of fluid.
*2: The indicated fluid quantity is only a guideline. The necessary quantity for replacement may differ slightly depending on the temperature and other factors.
*3: For more details about maintenance and service, refer to the indicated section.

## ■ Engine coolant

| Vehicle model | Coolant capacity | Coolant type |
|---|---|---|
| 1.6 L models | 7.8 liters (8.2 US qt, 6.9 Imp qt) | SUBARU Super Coolant |
| 2.0 L models | 7.8 liters (8.2 US qt, 6.9 Imp qt) | |

The indicated coolant quantity is only a guideline. The necessary quantity for replacement may differ slightly depending on the temperature and other factors. For more details about maintenance and service, refer to “Cooling system” ☞11-16.

## ■ Electrical system

| | | | |
|---|---|---|---|
| Battery type | Models without Auto Start Stop system | Brazil models | 55D23L |
| | | Other models | 75D23L |
| | Models with Auto Start Stop system | Q-85 | |
| Alternator | | 12 V-130 A | |
| Spark plugs | 1.6 L models | DILZKAR7B11 (NGK) | |
| | 2.0 L models | DILKAR7B8 (NGK) | |

## ■ Tires

For the tire specifications, see the tire pressure label located on the door pillar on the driver's side. When towing, always follow the recommended tire pressure that is specified on the label.

## ■ Temporary spare tires

| | |
|---|---|
| Temporary spare tire size | 185/65R17 |
| Temporary spare tire inflation pressure (recommended cold tire inflation pressure) | 290 kPa (2.9 kgf/cm$^2$, 42 psi) |
| Wheel nut tightening torque | 120 N·m (12 kgf·m, 89 lbf·ft)*1*2 |

*1: This torque is equivalent to applying approximately 40 to 50 kgf (88 to 110 lbf) at the end of the wheel nut wrench. If you have tightened the wheel nuts by yourself, have the tightening torque checked at the nearest automotive service facility as soon as possible.
*2: For the wheel nut tightening procedure, refer to "Changing flat tire" ☞9-5.

## ■ Brake disc

If you need information on the usage limit value of brake discs and the method for measuring them, we recommend that you consult your SUBARU dealer.

# Fuses and circuits

## ■ Fuse panel located in the passenger compartment

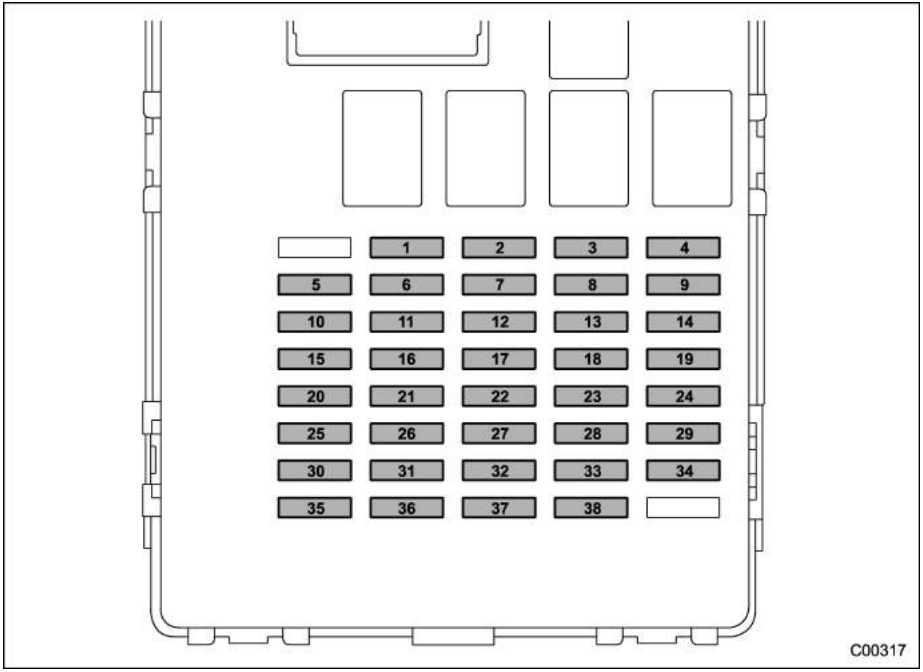


| Fuse panel | Fuse rating | Circuit |
|---|---|---|
| 1 | Empty | |
| 2 | 20 A | CIGAR SEAT/H |
| 3 | 7.5 A | IG A-1 |
| 4 | 15 A | AUDIO NAVI |
| 5 | 15 A | IG B-2 |
| 6 | 7.5 A | METER IG (DCDC) |
| 7 | 15 A | 12 V SOCKET |
| 8 | 15 A | A/C IG |
| 9 | 7.5 A | ACC |
| 10 | 7.5 A | IG B-1 |
| 11 | 10 A | EYE SIGHT (DCDC) |
| 12 | Empty | |
| 13 | 7.5 A | IG A-3 |
| 14 | 7.5 A | UNIT +B |
| 15 | 7.5 A | METER IG |
| 16 | 7.5 A | SRVD (DCDC) |
| 17 | 7.5 A | MIRROR |
| 18 | 7.5 A | LAMP IG |
| 19 | 10 A | IG A-2 |
| 20 | 10 A | SRS AIR BAG |
| 21 | 7.5 A | A/C IG (DCDC) |
| 22 | 15 A | STRG/H |

| Fuse panel | Fuse rating | Circuit |
|---|---|---|
| 23 | 10 A | DRL |
| 24 | 7.5 A | A/C ACC (DCDC) |
| 25 | 7.5 A | UNIT +B (DCDC) |
| 26 | 10 A | BACK UP |
| 27 | 10 A | A/C +B |
| 28 | 20 A | TRAIL R.FOG |
| 29 | 7.5 A | AUDIO ACC (DCDC) |
| 30 | 7.5 A | BACK UP (DCDC) |
| 31 | 7.5 A | SMT (DCDC) |
| 32 | 7.5 A | ILLUMI |
| 33 | 7.5 A | KEY SW A |
| 34 | Empty | |
| 35 | 7.5 A | ILLUMI (DCDC) |
| 36 | 7.5 A | KEY SW B |
| 37 | 7.5 A | STOP |
| 38 | 7.5 A | EYE SIGHT |

– CONTINUED –

## ■ Fuse panel located in the engine compartment

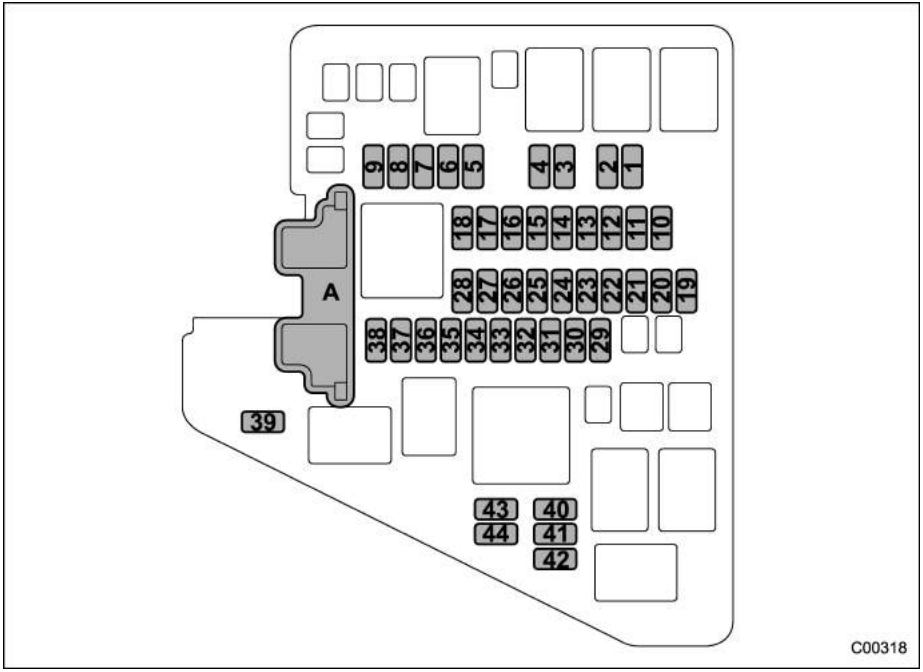


A) Main fuse

| Fuse panel | Fuse rating | Circuit |
|---|---|---|
| 1 | 7.5 A | HORN 2 |
| 2 | 7.5 A | HORN 1 |
| 3 | 15 A | H/L LO RH |
| 4 | 15 A | H/L LO LH |
| 5 | Empty | |
| 6 | 10 A | H/L HI RH |
| 7 | 10 A | H/L HI LH |
| 8 | 10 A | TAIL |
| 9 | 10 A | ODS |
| 10 | 7.5 A | OBD |
| 11 | 7.5 A | PU B/UP |
| 12 | 30 A | JB-B |
| 13 | 15 A | HAZARD |
| 14 | 20 A | FUEL |
| 15 | 7.5 A | D-OP+B |
| 16 | 10 A | MB-B |
| 17 | 15 A | D/L |
| 18 | 10 A | DCM |
| 19 | 20 A | TCU |
| 20 | 7.5 A | CVT SSR |
| 21 | 15 A | IG COIL |
| 22 | 10 A | AVCS |

| Fuse panel | Fuse rating | Circuit |
|---|---|---|
| 23 | 10 A | E/G2 |
| 24 | Empty | |
| 25 | Empty | |
| 26 | 20 A | O2 HTR |
| 27 | 15 A | E/G1 |
| 28 | Empty | |
| 29 | 30 A | BACKUP |
| 30 | 25 A | R. DEF |
| 31 | 20 A | AUDIO |
| 32 | 30 A | VDC SOL |
| 33 | 25 A | MAIN FAN |
| 34 | 25 A | SUB FAN |
| 35 | 10 A | DEICER |
| 36 | 15 A | F. FOG, AGS |
| 37 | 15 A | BLOWER |
| 38 | 15 A | BLOWER |
| 39 | Empty | |
| 40 | 30 A | F. WIPER |
| 41 | 15 A | F. WASH |
| 42 | 15 A | R. WIPER |
| 43 | Empty | |
| 44 | Empty | |

# Bulb chart

## ■ Safety precautions

**WARNING**

**Bulbs may become very hot while illuminated. Before replacing bulbs, turn off the lights and wait until the bulbs cool down. Otherwise, there is a risk of sustaining a burn injury.**

**CAUTION**

**Replace any bulb only with a new bulb of the specified wattage. Using a bulb of different wattage could result in a fire.**

## ■ Bulb chart

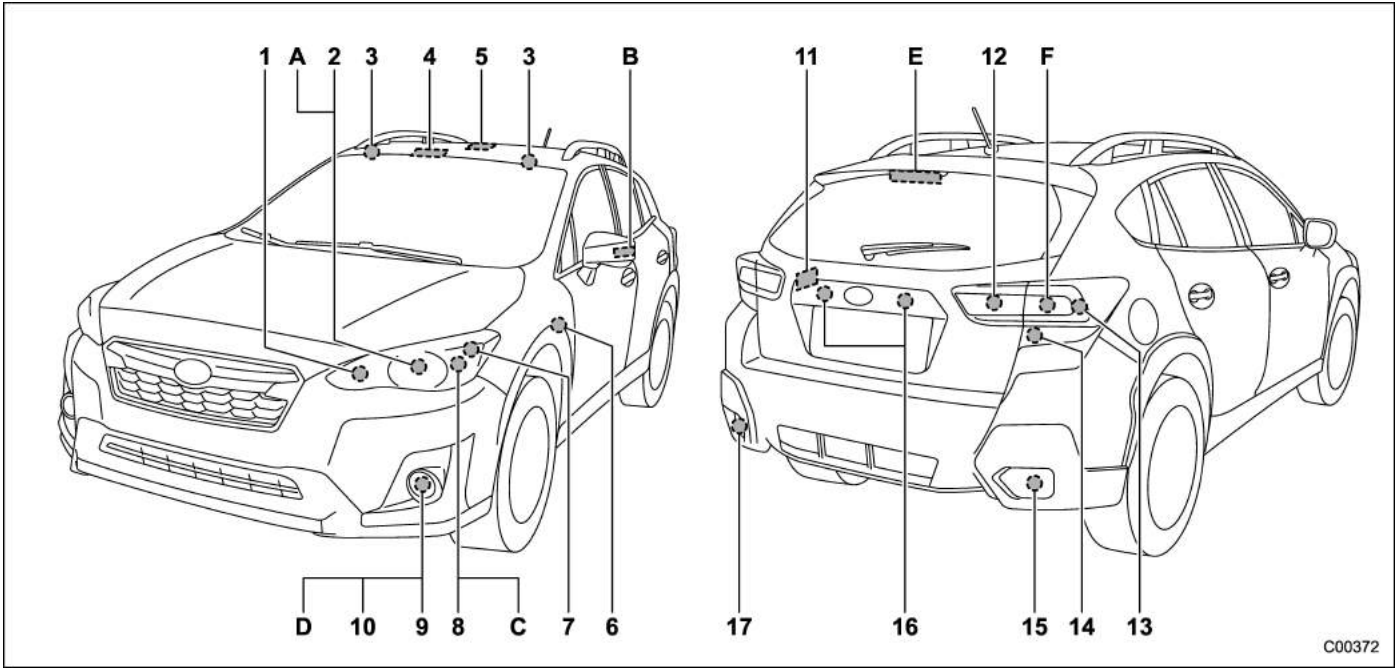


**NOTE**

**Lights A, B, C, D, E and F are the LED (Light Emitting Diode) type. We recommend that you consult your SUBARU dealer for replacement.**

– CONTINUED –

| | | Wattage | Bulb No.*1 |
|---|---|---|---|
| 1) | High beam headlight (models with halogen headlight) | 12 V-60 W | HB3 |
| | Front turn signal light (models with LED headlight) | 12 V-21 W | WY21W |
| 2) | Low beam headlight (models with halogen headlight) | 12 V-55 W | H11 |
| 3) | Vanity mirror light (if equipped) | 12 V-2 W | – |
| 4) | Map light | 12 V-8 W | – |
| 5) | Dome light | 12 V-8 W | – |
| 6) | Side turn signal light (if equipped)*2 | 12 V-5 W | W5W |
| 7) | Front position light (models with halogen headlight) | 12 V-5 W | W5W |
| 8) | Front turn signal light (models with halogen headlight) | 12 V-21 W | WY21W |
| 9) | Daytime running light (if equipped) | 12 V-13 W | P13W |
| 10) | Front fog light (models without LED fog light) (if equipped) | | |
| | Type A | 12 V-19 W | H16 |
| | Type B | 12 V-35 W | H8 |
| 11) | Cargo area light | 12 V-5 W | W5W |
| 12) | Backup light | 12 V-21 W | W21W |
| 13) | Tail light | 12 V-5 W | W5W |
| 14) | Rear turn signal light | 12 V-21 W | WY21W |
| 15) | Rear fog light (RHD models) (if equipped) | 12 V-21 W | W21W |
| 16) | License plate light | 12 V-5 W | W5W |
| 17) | Rear fog light (LHD models) (if equipped) | 12 V-21 W | W21W |

| | | Wattage | Bulb No.*1 |
|---|---|---|---|
| A) | Low and high beam headlight (models with LED headlight) | – | – |
| B) | Side turn signal light (if equipped) | – | – |
| C) | Front position light/Daytime running light (models with LED headlight) | – | – |
| D) | Front fog light (models with LED fog light) | – | – |
| E) | High-mounted stop light | – | – |
| F) | Stop light | – | – |

*1: ECE specification
*2: The bulb is an integral part of the side turn signal light assembly. If the bulb fails, the whole side turn signal light assembly must be replaced.

# Vehicle identification

## ■ For vehicle body

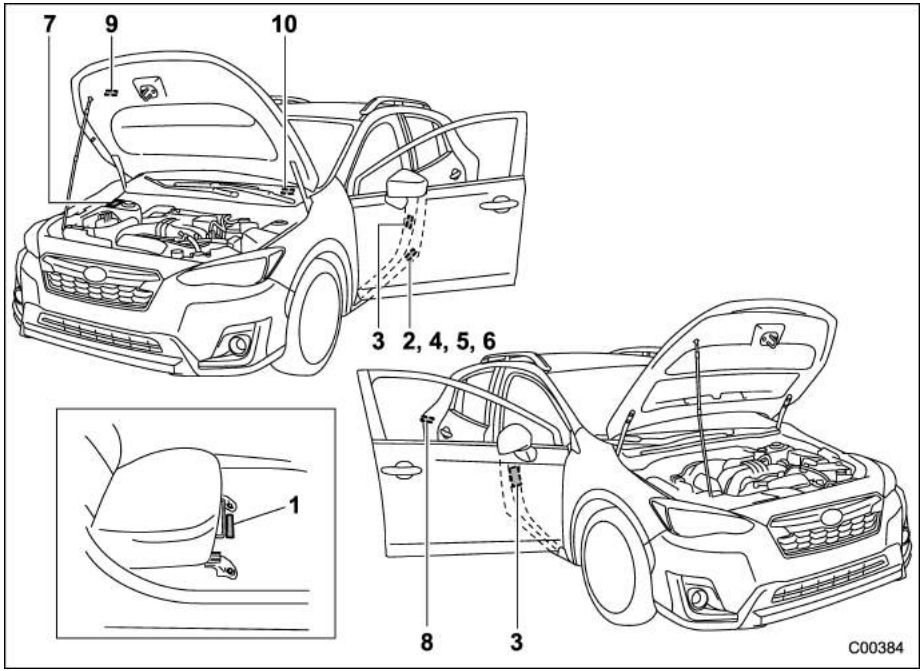


1) Vehicle identification number under the floor carpet of the right-hand front seat
2) ID label (Europe and Russia models)
3) Tire inflation pressure label
4) Year of manufacture label (Middle East models)
5) Model number label (General models)
6) Built date label (Australia models)
7) ADR compliance plate (Australia models)
8) Fuel label
9) Air conditioner label
10) Vehicle identification number plate

ID label (Russia models) ..... 13-3
Built date information (Australia models)..... 13-3
Definition ..... 13-3
Location ..... 13-3
Information for Middle East models ..... 13-3
Year of manufacture and country of origin..... 13-3
Speed limit, maximum torque and maximum power at rpm ..... 13-4
Tires ..... 13-4
Fuel economy tips ..... 13-4
Declaration of conformity in accordance with the radio and telecommunications terminal equipment directive 1999/5/EC ..... 13-5
Immobilizer ..... 13-5
Keyless access with push-button start system .... 13-11
Tire pressure monitoring system ..... 13-12
Declaration of conformity in accordance with EMC Directive 2014/30/EC ..... 13-13
Compressor ..... 13-13
Declaration of conformity in accordance with the Machinery Directive 2006/42/EC ..... 13-14
Jack ..... 13-14
Declaration of conformity in accordance with the Radio Equipment Directive (2014/53/EU)..... 13-15
Replacing a coin/button cell battery precautions..... 13-15
Transmitter for the keyless entry system ..... 13-24
Receiver for the keyless entry system ..... 13-29
Access key ..... 13-34
Immobilizer..... 13-36
Subaru Rear Vehicle Detection (SRVD)..... 13-43
Tire pressure monitoring system ..... 13-48
LF Antenna..... 13-52
Importer Information ..... 13-54
Technical information..... 13-58
Singapore models..... 13-58
Panama models ..... 13-59
Dominican Republic models ..... 13-60
Indonesia models ..... 13-60
Serbia models ..... 13-60
Vietnam models..... 13-62
Philippine models ..... 13-63
Taiwan models..... 13-63
Jordan models ..... 13-66
Argentina models ..... 13-66
Jamaica models..... 13-67
Commonwealth of Dominica models ..... 13-67
Brazil models ..... 13-68
Republic of South Africa models..... 13-70
Russia/Kazakhstan models ..... 13-71
Paraguay models..... 13-72
Bahamas models ..... 13-72
Bahrain models ..... 13-73
British Virgin Islands/Bolivia/Saint Martin models ..... 13-73
Bermuda models ..... 13-73
El Salvador/Grenada models ..... 13-74
Australia/New Zealand models ..... 13-74
Israel models..... 13-75
Ukraine models ..... 13-77

Suriname models ..... 13-78
Venezuela models ..... 13-78
Oman models ..... 13-78
UAE models ..... 13-79
Nigeria models ..... 13-79
Morocco models ..... 13-80

## ID label (Russia models)

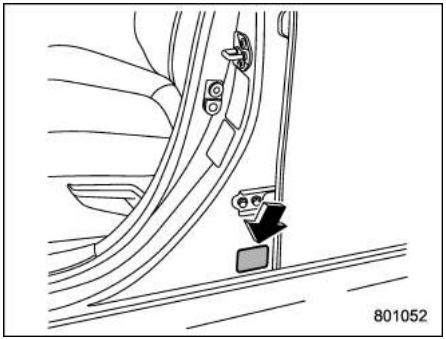


The ID label is located on the left side center pillar as shown in the illustration.

## Built date information (Australia models)

### ■ Definition

The “BUILT DATE” is the calendar month and the year in which the body shell and powertrain sub-assemblies are conjoined and the vehicle is driven or moved from the production line.

### ■ Location

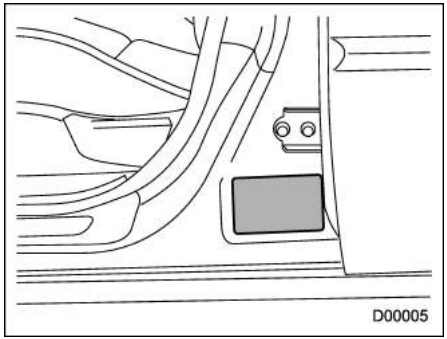


The “BUILT DATE” is indicated on a label which is located on the left side center pillar as shown in the illustration.

## Information for Middle East models

### ■ Year of manufacture and country of origin

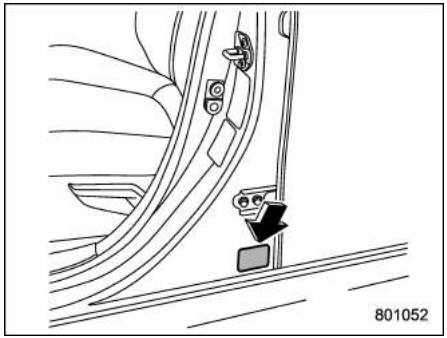


The calendar year when your vehicle was manufactured and the country of origin are indicated in the “Year of manufacture label” attached to the driver’s door jam.

– CONTINUED –

## ■ Speed limit, maximum torque and maximum power at rpm

| Model | 1.6 L models | 2.0 L models |
|---|---|---|
| | CVT | CVT |
| Speed limit km/h | 181 | 197 |
| Maximum torque N·m (kgf·m)/rpm | 150 (15.3) /3,600 | 196 (20.0) /4,000 |
| Maximum power kW (PS)/rpm | 84 (114) /6,200 | 115 (156) /6,000 |

- The performance data above is the numeric value measured according to the GSO-ISO-1585-2008 quality norm.
- The performance data above is the numeric value measured from petrol with an octane rating of 95 (Research Octane number).

## ■ Tires

| Tire size*1 | | 225/60R17 99H<br>225/55R18 98V |
|---|---|---|
| Pressure*1&*2 | Front | 230 kPa (2.3 kgf/cm$^2$, 33 psi) |
| | Rear | 220 kPa (2.2 kgf/cm$^2$, 32 psi) |

*1: For the information about spare tire, refer to “Temporary spare tires” ☞12-9.
*2: Pressures listed above are applied for normal condition. When the vehicle is in full load condition, adjust to the corresponding tire pressure that showing on the tire pressure label located on the driver’s door pillar.

### NOTE

**For the information about wheel nut tightening torque, refer to “Temporary spare tires” ☞12-9.**

## ■ Fuel economy tips

Observe the following in order to improve your vehicle’s fuel economy and reduce $CO_2$ emissions.

- Drive the vehicle appropriately.
- Have your vehicle maintained periodically.
- Do not drive recklessly.
- Do not drive at excessively high speeds.
- Keep the tires inflated to an appropriate tire pressure.
- Minimize engine idling.
- Do not carry excessively heavy cargo.

# Declaration of conformity in accordance with the radio and telecommunications terminal equipment directive 1999/5/EC

## ■ Immobilizer

### ▼ Models with “keyless access with push-button start system”

SUBARU

SUBARU CORPORATION
ENGINEERING DIV.1
1-1, Subaru-cho, Ota-shi, Gunma-ken, 373-8555 JAPAN
TEL +81 276 20 3004 FAX +81 276 20 3879

R&TTE Declaration of Conformity

We,

Manufacturer's Name: SUBARU CORPORATION
Manufacturer's Address: 1-1,Subaru-cho,Ota-shi,Gunma 373-8555 JAPAN

hereby declare under our sole responsibility that the product:

Product Name: Immobilizer
Product Model: SSPIMB02

to which this declaration relates is in conformity with the essential requirements and other relevant requirements of the R&TTE Directive (1999/5/EC). The product is compliant with the following standards and/or other normative documents:

| | |
|---|---|
| -Health & safety requirements: | EN60950-1:2006 +A11:2009 +A1:2010 +A12:2011 +AC:2011 +A2:2013 |
| -EMC requirements | EN301 489-1 V1.9.2 & EN301 489-3 V1.6.1 |
| -Effective uses of radio spectrum: | EN300 330-2 V1.6.1 |

Supplementary information:

| | |
|---|---|
| * CE mark | CE |
| * Member states intended for use | EU and EFTA |

Date: June 6, 2017

Signature: Yuji Kobayashi

D00715

**English**

Hereby, SUBARU CORPORATION, declares that this SSPIMB02 is in compliance with the essential requirements and other relevant provisions of Directive 1999/5/EC.

**Suomi**

SUBARU CORPORATION vakuuttaa täten että SSPIMB02 tyyppinen laite on direktiivin 1999/5/EY oleellisten vaatimusten ja sitä koskevien direktiivin muiden ehtojen mukainen.

**Nederlands**

Hierbij verklaart SUBARU CORPORATION dat het toestel SSPIMB02 in overeenstemming is met de essentiële eisen en de andere relevante bepalingen van richtlijn 1999/5/EG.

**Français**

Par la présente SUBARU CORPORATION déclare que l'appareil SSPIMB02 est conforme aux exigences essentielles et aux autres dispositions pertinentes de la directive 1999/5/CE.

D00716

**Svenska**

Härmed intygar SUBARU CORPORATION att denna SSPIMB02 står I överensstämmelse med de väsentliga egenskapskrav och övriga relevanta bestämmelser som framgår av direktiv 1999/5/EG.

**Dansk**

Undertegnede SUBARU CORPORATION erklærer herved, at følgende udstyr SSPIMB02 overholder de væsentlige krav og øvrige relevante krav i direktiv 1999/5/EF.

**Deutsch**

Hiermit erklärt SUBARU CORPORATION, dass sich das Gerät SSPIMB02 in Übereinstimmung mit den grundlegenden Anforderungen und den übrigen einschlägigen Bestimmungen der Richtlinie 1999/5/EG befindet.

**Ελληνικά**

ΜΕ ΤΗΝ ΠΑΡΟΥΣΑ SUBARU CORPORATION ΔΗΛΩΝΕΙ ΟΤΙ SSPIMB02 ΣΥΜΜΟΡΦΩΝΕΤΑΙ ΠΡΟΣ ΤΙΣ ΟΥΣΙΩΔΕΙΣ ΑΠΑΙΤΗΣΕΙΣ ΚΑΙ ΤΙΣ ΛΟΙΠΕΣ ΣΧΕΤΙΚΕΣ ΔΙΑΤΑΞΕΙΣ ΤΗΣ ΟΔΗΓΙΑΣ 1999/5/ΕΚ.

D00717

**Italiano**

Con la presente SUBARU CORPORATION dichiara che questo SSPIMB02 è conforme ai requisiti essenziali ed alle altre disposizioni pertinenti stabilite dalla direttiva 1999/5/CE.

**Español**

Por medio de la presente SUBARU CORPORATION declara que el SSPIMB02 cumple con los requisitos esenciales y cualesquiera otras disposiciones aplicables o exigibles de la Directiva 1999/5/CE.

**Português**

SUBARU CORPORATION declara que este SSPIMB02 está conforme com os requisitos essenciais e outras disposições da Directiva 1999/5/CE.

**Malti**

Hawnhekk, SUBARU CORPORATION, jiddikjara li dan SSPIMB02 jikkonforma mal-ħtiġijiet essenzjali u ma provvedimenti oħrajn relevanti li hemm fid-Dirrettiva 1999/5/EC.

D00718

**Eesti keel**

Käesolevaga kinnitab SUBARU CORPORATION seadme SSPIMB02 vastavust direktiivi 1999/5/EÜ põhinõuetele ja nimetatud direktiivist tulenevatele teistele asjakohastele sätetele.

**Magyar**

Alulírott, SUBARU CORPORATION nyilatkozom, hogy a SSPIMB02 megfelel a vonatkozó alapvető követelményeknek és az 1999/5/EC irányelv egyéb előírásainak.

**Slovenčina**

SUBARU CORPORATION týmto vyhlasuje, že SSPIMB02 spĺňa základné požiadavky a všetky príslušné ustanovenia Smernice 1999/5/ES.

**Čeština**

SUBARU CORPORATION tímto prohlašuje, že tento SSPIMB02 je ve shodě se základními požadavky a dalšími příslušnými ustanoveními směrnice 1999/5/ES.

D00719

**Slovenščina**

SUBARU CORPORATION izjavlja, da je ta SSPIMB02 v skladu z bistvenimi zahtevami in ostalimi relevantnimi določili direktive 1999/5/ES.

**Lietuvių kalba**

Šiuo SUBARU CORPORATION deklaruoja, kad šis SSPIMB02 atitinka esminius reikalavimus ir kitas 1999/5/EB Direktyvos nuostatas.

**Latviešu valoda**

Ar šo SUBARU CORPORATION deklarē, ka SSPIMB02 atbilst Direktīvas 1999/5/EK būtiskajām prasībām un citiem ar to saistītajiem noteikumiem.

**Polski**

Niniejszym SUBARU CORPORATION oświadcza, że SSPIMB02 jest zgodny z zasadniczymi wymogami oraz pozostałymi stosownymi postanowieniami Dyrektywy 1999/5/EC.

D00720

**Íslenska**

Hér með lýsir SUBARU CORPORATION yfir því að SSPIMB02 er í samræmi við grunnkröfur og aðrar kröfur, sem gerðar eru í tilskipun 1999/5/EC.

**Norsk**

SUBARU CORPORATION erklærer herved at utstyret SSPIMB02 er i samsvar med de grunnleggende krav og øvrige relevante krav i direktiv 1999/5/EF.

**български**

С настоящето, SUBARU CORPORATION, декларира, че SSPIMB02 е в съответствие със съществените изисквания и другите приложими разпоредби на Директива 1999/5/EC.

**Română**

Prin prezenta, SUBARU CORPORATION, declară că aparatul SSPIMB02 este în conformitate cu cerințele esențiale și cu alte prevederi pertinente ale Directivei 1999/5/CE.

D00721

– CONTINUED –

**Црногорски језик**

Ovim, SUBARU CORPORATION, izjavljuje da ovaj SSPIMB02 je usklađen sa bitnim zahtjevima i drugim relevantnim odredbama Direktive 1999/5/EC.

**Hrvatski**

Ovim SUBARU CORPORATION, izjavljuje da je SSPIMB02 u sklau s bitnim zahtjevima i drugim relevantnim odredbama Direktive 1999/5/EC i Pravilnika o RiTT opremi (NN 25/2012).

**Српски/srpski**

Ovim, SUBARU CORPORATION, deklariše da je SSPIMB02 u skladu sa osnovnim zahtevima i ostalim relevantnim odredbama Direktive 1999/5/EC.

**Shqip**

Nepermjet kesaj, SUBARU CORPORATION, deklaroj qe ky SSPIMB02 eshte ne pajtim me kerkesat thelbesore dhe dispozitat e tjera perkatese te Direktives 1999/5/EC.

D00722

**Türkçe**

İşbu belge ile SUBARU CORPORATION, bu SSPIMB02 ürününün 1999/5/EC Yönetmeliği'nin temel gerekliliklerine ve diğer ilgili hükümlerine uygun olduğunu beyan eder.

D00723

## ▼ Models without "keyless access with push-button start system"

### ▽ Models with immobilizer ECU

**English**

Hereby, TOKAI RIKA CO., LTD., declares that this RI-56BFH is in compliance with the essential requirements and other relevant provisions of Directive 1999/5/EC.

**Suomi**

TOKAI RIKA CO., LTD. vakuuttaa täten että RI-56BFH tyyppinen laite on direktiivin 1999/5/EY oleellisten vaatimusten ja sitä koskevien direktiivin muiden ehtojen mukainen.

**Nederlands**

Hierbij verklaart TOKAI RIKA CO., LTD. dat het toestel RI-56BFH in overeenstemming is met de essentiële eisen en de andere relevante bepalingen van richtlijn 1999/5/EG.

**Français**

Par la présente TOKAI RIKA CO., LTD. déclare que l'appareil RI-56BFH est conforme aux exigences essentielles et aux autres dispositions pertinentes de la directive 1999/5/CE.

D00779

**Svenska**

Härmed intygar TOKAI RIKA CO., LTD. att denna RI-56BFH står i överensstämmelse med de väsentliga egenskapskrav och övriga relevanta bestämmelser som framgår av direktiv 1999/5/EG.

**Dansk**

Undertegnede TOKAI RIKA CO., LTD. erklærer herved, at følgende udstyr RI-56BFH overholder de væsentlige krav og øvrige relevante krav i direktiv 1999/5/EF.

**Deutsch**

Hiermit erklärt TOKAI RIKA CO., LTD., dass sich das Gerät RI-56BFH in Übereinstimmung mit den grundlegenden Anforderungen und den übrigen einschlägigen Bestimmungen der Richtlinie 1999/5/EG befindet.

**Ελληνικά**

ΜΕ ΤΗΝ ΠΑΡΟΥΣΑ TOKAI RIKA CO., LTD. ΔΗΛΩΝΕΙ ΟΤΙ RI-56BFH ΣΥΜΜΟΡΦΩΝΕΤΑΙ ΠΡΟΣ ΤΙΣ ΟΥΣΙΩΔΕΙΣ ΑΠΑΙΤΗΣΕΙΣ ΚΑΙ ΤΙΣ ΛΟΙΠΕΣ ΣΧΕΤΙΚΕΣ ΔΙΑΤΑΞΕΙΣ ΤΗΣ ΟΔΗΓΙΑΣ 1999/5/ΕΚ.

D00780

**Italiano**

Con la presente TOKAI RIKA CO., LTD. dichiara che questo RI-56BFH è conforme ai requisiti essenziali ed alle altre disposizioni pertinenti stabilite dalla direttiva 1999/5/CE.

**Español**

Por medio de la presente TOKAI RIKA CO., LTD. declara que el RI-56BFH cumple con los requisitos esenciales y cualesquiera otras disposiciones aplicables o exigibles de la Directiva 1999/5/CE.

**Português**

TOKAI RIKA CO., LTD. declara que este RI-56BFH está conforme com os requisitos essenciais e outras disposições da Directiva 1999/5/CE.

**Malti**

Hawnhekk, TOKAI RIKA CO., LTD., jiddikjara li dan RI-56BFH jikkonforma mal-ħtiġijiet essenzjali u ma provvedimenti oħrajn relevanti li hemm fid-Dirrettiva 1999/5/EC.

D00781

**Eesti keel**

Käesolevaga kinnitab TOKAI RIKA CO., LTD. seadme RI-56BFH vastavust direktiivi 1999/5/EÜ põhinõuetele ja nimetatud direktiivist tulenevatele teistele asjakohastele sätetele.

**Magyar**

Alulírott, TOKAI RIKA CO., LTD. nyilatkozom, hogy a RI-56BFH megfelel a vonatkozó alapvető követelményeknek és az 1999/5/EC irányelv egyéb előírásainak.

**Slovenčina**

TOKAI RIKA CO., LTD. týmto vyhlasuje, že RI-56BFH spĺňa základné požiadavky a všetky príslušné ustanovenia Smernice 1999/5/ES.

**Čeština**

TOKAI RIKA CO., LTD. tímto prohlašuje, že tento RI-56BFH je ve shodě se základními požadavky a dalšími příslušnými ustanoveními směrnice 1999/5/ES.

D00782

*– CONTINUED –*

**Slovenščina**

TOKAI RIKA CO., LTD. izjavlja, da je ta RI-56BFH v skladu z bistvenimi zahtevami in ostalimi relevantnimi določili direktive 1999/5/ES.

**Lietuvių kalba**

Šiuo TOKAI RIKA CO., LTD. deklaruoja, kad šis RI-56BFH atitinka esminius reikalavimus ir kitas 1999/5/EB Direktyvos nuostatas.

**Latviešu valoda**

Ar šo TOKAI RIKA CO., LTD. deklarē, ka RI-56BFH atbilst Direktīvas 1999/5/EK būtiskajām prasībām un citiem ar to saistītajiem noteikumiem.

**Polski**

Niniejszym TOKAI RIKA CO., LTD. oświadcza, że RI-56BFH jest zgodny z zasadniczymi wymogami oraz pozostałymi stosownymi postanowieniami Dyrektywy 1999/5/EC.

D00783

**Íslenska**

Hér með lýsir TOKAI RIKA CO., LTD. yfir því að RI-56BFH er í samræmi við grunnkröfur og aðrar kröfur, sem gerðar eru í tilskipun 1999/5/EC.

**Norsk**

TOKAI RIKA CO., LTD. erklærer herved at utstyret RI-56BFH er i samsvar med de grunnleggende krav og øvrige relevante krav i direktiv 1999/5/EF.

**български**

С настоящето, TOKAI RIKA CO., LTD., декларира, че RI-56BFH е в съответствие със съществените изисквания и другите приложими разпоредби на Директива 1999/5/EC.

**Română**

Prin prezenta, TOKAI RIKA CO., LTD., declară că aparatul RI-56BFH este în conformitate cu cerințele esențiale și cu alte prevederi pertinente ale Directivei 1999/5/CE.

D00784

**Црногорски језик**

Ovim, TOKAI RIKA CO., LTD., izjavljuje da ovaj RI-56BFH je usklađen sa bitnim zahtjevima i drugim relevantnim odredbama Direktive 1999/5/EC.

**Hrvatski**

Ovim TOKAI RIKA CO., LTD., izjavljuje da je RI-56BFH u sklau s bitnim zahtjevima i drugim relevantnim odredbama Direktive 1999/5/EC i Pravilnika o RiTT opremi (NN 25/2012).

**Српски/srpski**

Ovim, TOKAI RIKA CO., LTD., deklariše da je RI-56BFH u skladu sa osnovnim zahtevima i ostalim relevantnim odredbama Direktive 1999/5/EC.

**Shqip**

Nepermjet kesaj, TOKAI RIKA CO., LTD., deklaroj qe ky RI-56BFH eshte ne pajtim me kerkesat thelbesore dhe dispozitat e tjera perkatese te Direktives 1999/5/EC.

D00785

**Türkçe**
İşbu belge ile TOKAI RIKA CO., LTD., bu RI-56BFH ürününün 1999/5/EC Yönetmeliği'nin temel gerekliliklerine ve diğer ilgili hükümlerine uygun olduğunu beyan eder.

D00786

The DECLARATION of CONFORMITY (DoC) is available at the following address:
http://www.tokai-rika.co.jp/pc/

CE

▽ **Models without Immobilizer ECU**

The latest "DECLARATION of CONFORMITY" (DoC) is available at the following address:
https://www.denso.com/global/en/contact-us/doc/

CE

**Црногорски језик**
Ovim, SUBARU CORPORATION, izjavljuje da ovaj FJ16-2 je usklađen sa bitnim zahtjevima i drugim relevantnim odredbama Direktive 1999/5/EC.

**Српски/srpski**
Ovim, SUBARU CORPORATION, deklariše da je FJ16-2 u skladu sa osnovnim zahtevima i ostalim relevantnim odredbama Direktive 1999/5/EC.

**Shqip**
Nepermjet kesaj, SUBARU CORPORATION, deklaroj qe ky FJ16-2 eshte ne pajtim me kerkesat thelbesore dhe dispozitat e tjera perkatese te Direktives 1999/5/EC.

D00746

## ■ Keyless access with push-button start system

- Replace only with the same or equivalent type recommended by the manufacturer.
- Dispose of used batteries according to the local laws.

The latest "DECLARATION of CONFORMITY" (DoC) is available at the following address:
http://www.denso.com/global/en/contact-us/doc/

CE

**Shqip**
Nepermjet kesaj, DENSO CORPORATION, deklaroj qe ky 14AHK eshte ne pajtim me kerkesat thelbesore dhe dispozitat e tjera perkatese te Direktives 1999/5/EC.

D00877

*– CONTINUED –*

**Црногорски језик**

Ovim, SUBARU CORPORATION, izjavljuje da ovaj FJ16-1 je usklađen sa bitnim zahtjevima i drugim relevantnim odredbama Direktive 1999/5/EC.

**Српски/srpski**

Ovim, SUBARU CORPORATION, deklariše da je FJ16-1 u skladu sa osnovnim zahtevima i ostalim relevantnim odredbama Direktive 1999/5/EC.

**Shqip**

Nepermjet kesaj, SUBARU CORPORATION, deklaroj qe ky FJ16-1 eshte ne pajtim me kerkesat thelbesore dhe dispozitat e tjera perkatese te Direktives 1999/5/EC.

D00738

## ■ Tire pressure monitoring system

Hereby, Schrader Electronics Ltd., declares that this TPMS is in compliance with the essential requirements and other provisions of directive 1999/5/EC. The declaration of conformity may be consulted at emcteam@schrader.co.uk

CE

# Declaration of conformity in accordance with EMC Directive 2014/30/EC

## ■ Compressor

YOKOHAMA

EC Declaration of Conformity

Manufacturer: THE YOKOHAMA RUBBER CO., LTD.
Address: 2-1, Oiwake, Hiratsuka city, Kanagawa, Japan

Object of declaration

Product: Compressor
Model No.: C33H-08

conforms with the essential requirements of the EMC Directive 2014/30/EC, based on the following specifications applied:

EU Harmonized standards
EN 61000-6-2:2005
EN 61000-6-4:2007 + A1:2007

Authorized representative in Europe:
YOKOHAMA EUROPE GmbH
Monschauerstrasse 12, D-40549 Düsseldorf, GERMANY

Signed for and on behalf of: THE YOKOHAMA RUBBER CO., LTD.

Signature: _____
Yasuhiko Seita
General Manager
Tire Quality Assurance Department

Date of Issue: 1st August, 2016

D00509

# Declaration of conformity in accordance with the Machinery Directive 2006/42/EC

## ■ Jack

GOODMAN

**DECLARATION OF CONFORMITY**

**For**

**Pantograph Car Jack**

**Models: PJF900 & PJF1000**

**Manufactured by**
Tohei Industrial Co., Ltd.
No.40-1, Kagekatsu-Cho,
Fushimi-Ku
Kyoto 612-8307
Japan

**Means of Conformity**
The Product is in conformity with EU law as approximated by the following directive
Machinery Directive 2006/42/EC based on Technical Documentation File No. **2185 Issue 1, Revision 1.**
January 2016

**Standards used as guidance**

**EN ISO 12100: 2010**
**Limited reference to EN 1494:2000/A1: 2008**
**Refer to complete listing in TF**

**Technical File compiled from manufacturer's documentation and held in the EU, on behalf of the manufacturer by:**
Element Materials Technology Warwick Ltd.
100 Frobisher Business Park,
Leigh Sinton Road, Malvern,
Worcestershire, WR14 1BX
United Kingdom

**Signature of Responsible Person:** **Mr. Masato Nasu**
President

**Date:** 27th January 2016
**Declaration No.** **TRA-015417-01 DofC Issue 2**

D00414

# Declaration of conformity in accordance with the Radio Equipment Directive (2014/53/EU)

## ■ Replacing a coin/button cell battery precautions

This symbol is intended to alert the user to the presence of important operating and maintenance (servicing) instructions in the literature accompanying the appliance.

[CAUTION - Danger of explosion if battery is incorrectly replaced. Replace only with the same or equivalent type.]
[CAUTION - Do not exposed to excessive heat such as sunshine, fire or the like.]
WARNING
Do not ingest the battery, Chemical Burn Hazard
[The remote control supplied with] This product contains a coin/button cell battery. If the coin/button cell battery is swallowed, it can cause severe internal burns in just 2 hours and can lead to death
Keep new and used batteries away from children
If the battery compartment does not close securely, stop using the product and keep it away from children
If you think batteries might have been swallowed or placed inside any part of the body, seek immediate medical attention

Този символ има за цел да предупреди потребителя за наличието на важни инструкции за експлоатация и поддръжка (обслужване) в листовката, придружаваща уреда.

[ВНИМАНИЕ - Опасност от експлозия при неправилна подмяна. Да се подменя само със същия или еквивалентен вид.]
[ВНИМАНИЕ - Да не се излага на висока температура, като например слънчева светлина, огън или други подобни.]
ПРЕДУПРЕЖДЕНИЕ
Да не се поглъща батерията. Опасност от изгаряне с химикали
[Дистанционното управление, доставено с] Този продукт съдържа клетъчна батерия монета/копче.
При поглъщане клетъчната батерия монета/копче може да причини сериозни вътрешни изгаряния само за 2 часа и може да предизвика смърт
Новите и използваните батерии да се пазят далече от достъпа на деца
Ако отделението за батериите не се затваря добре, спрете да използвате продукта и го пазете далече от достъпа на деца
Ако смятате, че батериите може да са били поглъщани или попаднали в някоя от частите на тялото, незабавно потърсете медицинска помощ.

Tento symbol upozorňuje uživatele na důležité pokyny pro provoz a údržbu (servis) v dokumentaci doprovázející spotřebič.

[UPOZORNĚNÍ – Pokud je baterie nesprávně vyměněna, hrozí nebezpečí výbuchu. Vyměňujte pouze za stejný nebo ekvivalentní typ.]
[UPOZORNĚNÍ – Nevystavujte vysokým teplotám, např. od slunce, ohně a podobně.]
VAROVÁNÍ
Nepolykejte baterii, hrozí nebezpečí poleptání
[Dodané dálkové ovládání] Tento produkt obsahuje knoflíkovou baterii. Pokud knoflíkovou baterii spolknete, může způsobit závažné popáleniny vnitřních orgánů již za 2 hodiny a může způsobit i smrt.
Nové i použité baterie uchovávejte mimo dosah dětí.
Pokud nelze prostor pro baterii řádně uzavřít, přestaňte produkt používat a uložte je mimo dosah dětí
Pokud se domníváte, že došlo ke spolknutí baterie, nebo jejímu vniknutí do jakékoliv části těla, okamžitě vyhledejte lékařskou pomoc

D00787

– CONTINUED –

Dette symbol skal gøre brugeren opmærksom på tilslutningsvejledningen og vedligeholdelsesforskriftsinstruktioner i brugervejledningen, der følger med apparatet.

[FORSIGTIG - Fare for eksplosion, hvis batteriet udskiftes forkert. Udskift kun med samme eller tilsvarende type.]
[FORSIGTIG - må ikke udsættes for ekstrem varme fra f.eks. sol, ild eller lignende.]
ADVARSEL
Undgå at indtage batteriet, kemisk brandfare
(I embedsydelsen medfølger) Dette produkt indeholder et mønt-/knapcellebatteri
Hvis mønt-/knapcellebatteriet sluges kan det forårsage alvorlige indre forbrændinger på kun 2 timer og medføre dødsfald.
Opbevar nye og brugte batterier adskilt fra børn
Hvis batterirummet ikke kan lukkes sikkert, skal du stoppe med at bruge produktet og opbevare det adskilt fra børn.
Hvis du tror at batteriet kan være blevet slugt eller placeret inden i en del af kroppen, skal du straks søge lægehjælp

Dieses Symbol soll den Benutzer auf wichtige Bedienungs- und Instandhaltungs/Wartungs-Anweisungen in den Unterlagen des Geräts aufmerksam machen

[VORSICHT – Explosionsgefahr, wenn die Batterie nicht ordnungsgemäß ersetzt wird. Nur mit demselben oder ähnlichem Typ ersetzen.]
[VORSICHT – Nicht zu starker Wärme wie Sonneneinstrahlung, Feuer oder dergl. aussetzen.]
WARNUNG
Batterie nicht verschlucken. Verätzungsgefahr
(Die Fernbedienung bzw.) Dieses Produkt enthält eine Knopfzellenbatterie. Wenn die Knopfzellenbatterie verschluckt wird, kann sie innerhalb von nur 2 Stunden schwere innere Verbrennungen verursachen und zum Tod führen
Neue und gebrauchte Batterien von Kindern fernhalten
Wenn das Batteriefach nicht sicher schließt, verwenden Sie das Produkt nicht mehr und halten Sie es von Kindern fern
Wenn Sie den Verdacht haben, dass die Batterien verschluckt oder in einen Teil des Körpers platziert worden sind, suchen Sie sofort ärztliche Hilfe

See sümbol annab kasutajale marku olulise töö- ja hoolduseeskirjade teavitamiseks seadmega kaasasolevas kõrgenduses.

[HOIATUS! Patarei vahetamisel teisele plahvatusoht. Asendage ainult samaväärse või võrdväärse tüübiga.]
[HOIATUS! Ärge jätke liigse kuumuse näiteks päikesepaiste, tule või muu taolise kätte.]
HOIATUS!
Ärge neelake patareid, söövitusoht
(Kaugjuhtimispult) Toote sisaldab nöppatareid. Nöppatarei neelamisel võib see kõigest paari tunni jooksul põhjustada tõsiseid siseemisi põletusi ja lõppeda surmaga.
Hoiaa uusi ning kasutatud patareid lastele kättesaamatus kohas
Kui patareisõrmed sulge korralikult, lõpetage toote kasutamine ja hoidke seda lastele kättesaamatus kohas
Patareide neelamise või kehasse asetamise ohu korral pöörduge viivitamatult arsti poole

D00788

⚠ Αυτό το σύμβολο σκοπό έχει να ενημερώσει το χρήστη ότι υπάρχουν σημαντικές οδηγίες για τη λειτουργία και τη συντήρηση (service) στην τεκμηρίωση που συνοδεύει τη συσκευή

[ΠΡΟΣΟΧΗ - Κίνδυνος ανώφελης από ευφαμίση ανικατάσταση της μπαταρίας. Χρησιμοποιήστε μόνο μπαταρία ίδιου ή ισοδύναμου τύπου.]
[ΠΡΟΣΟΧΗ - Μην αφήνετε εκτεθειμένη τη συσκευή σε υπερβολική θερμοκρασία, όπως στην άμεση ηλιακή ακτινοβολία, σε εστίες φωτιάς κτλ.]
ΠΡΟΕΙΔΟΠΟΙΗΣΗ
Κίνδυνος χημικού εγκαύματος από την κατάπαση της μπαταρίας
(Το παρεχόμενο τηλεχειριστήριο) Αυτό το προϊόν περιέχει μια στρογγυλή μπαταρία τύπου κουμπιού.
Σε περίπτωση κατάποσης της μπαταρίας, υπάρχει κίνδυνος να προκληθούν σοβαρά εσωτερικά εγκαύματα σε 2 μόλις ώρες, τα οποία μπορεί να είναι θανατηφόρα.
Κρατήστε τις καινούργιες και τις χρησιμοποιημένες μπαταρίες μακριά από παιδιά.
Αν η θήκη της μπαταρίας δεν κλείνει καλά, σταματήστε να χρησιμοποιείτε το προϊόν και φυλάξτε το μακριά από παιδιά.
Αν πιστεύετε ότι υπάρχει περίπτωση να έχουν καταπιεί ή να έχουν βάλει μια μπαταρία σε κάποιο σημείο του σώματός τους, ζητήστε αμέσως ιατρική βοήθεια

⚠ Este símbolo pretende alertar al usuario de la presencia de importantes instrucciones de operación y mantenimiento (servicio) en la documentación que acompaña al aparato.

[PRECAUCIÓN - Peligro de explosión si la pila se sustituye incorrectamente. Sustituir solo por el mismo tipo o equivalente.]
[PRECAUCIÓN - No exponer a excesivo calor como por ejemplo la luz solar, fuego o similares.]
AVISO
No ingerir la pila. Peligro de quemaduras químicas
(El mando a distancia suministrado con) Este producto contiene una pila de botón. Si se traga la pila de botón, puede provocar quemaduras internas graves en solo 2 horas, lo que puede provocar la muerte
Mantenga las pilas nuevas y usadas fuera del alcance de los niños.
Si el compartimiento de la pila no se cierra de forma segura, deje de usar el producto y manténgalo fuera del alcance de los niños.
Si considera que las pilas podrían haberse tragado o situado dentro de cualquier parte del cuerpo, busque atención médica inmediata.

⚠ Ce symbole est destiné à alerter l'utilisateur de la présence d'instructions importantes d'utilisation et de maintenance (service) dans la documentation accompagnant le dispositif.

[ATTENTION - Il existe un risque d'explosion si la batterie n'est pas correctement remplacée. Remplacer uniquement avec un type identique ou équivalent.]
[ATTENTION - Ne pas exposer à une chaleur excessive telle que le soleil, le feu ou autre.]
AVERTISSEMENT
Ne pas ingérer la batterie, Risque de brûlage chimique
(La télécommande est fournie avec) Ce produit contient une pile en forme de pièce de monnaie / bouton.
Si cette pile bouton est avalée, elle peut provoquer en moins de 2 heures de graves brûlures internes pouvant entraîner la mort
Conservez les piles neuves et usées hors de la portée des enfants.
Si le compartiment de la batterie ne se ferme pas de manière sécurisée, cessez d'utiliser le produit et gardez-le hors de la portée des enfants.
Si vous pensez que les piles ont pu être avalées ou placées à l'intérieur de n'importe quelle partie du corps, consultez immédiatement un médecin

D00789

– CONTINUED –

⚠ Questo simbolo avverte l'utente della presenza di importanti istruzioni per l'uso e la manutenzione nel materiale illustrativo allegato all'apparecchiatura.

[ATTENZIONE: se la batteria viene sostituita in modo errato sussiste il pericolo di esplosione. Sostituire solo con lo stesso tipo o equivalente.]
[ATTENZIONE: non esporre a calore eccessivo (raggi diretti del sole, fuoco ecc.).]
AVVERTENZA
Non ingerire la batteria poiché sussiste il pericolo di bruciature di origine chimica.
(Il telecomando in dotazione a) Questo prodotto contiene una batteria a bottone. L'eventuale ingestione della batteria a bottone potrebbe provocare gravi bruciature interne in sole 2 ore e può portare alla morte.
Tenere le batterie nuove e usate lontano dalla portata dei bambini.
Se lo scomparto della batteria non viene chiuso bene, interrompere l'utilizzo del prodotto e tenerlo lontano dalla portata dei bambini.
Se si ritiene che le batterie potrebbero essere state ingerite o inserite in parti del corpo, rivolgersi immediatamente a un medico.

⚠ Šis simbols ir paredzēts, lai brīdinātu lietotāju, ka ierīcei pievienotajā literatūrā ir svarīgi norādījumi par lietošanu un (tehnisko) apkopi.

[UZMANĪBU! Nepareizi nomainot bateriju, rodas sprādziena risks. Mainiet tikai pret tāda pasa vai līdzvērtīga tipa bateriju.]
[UZMANĪBU! Nepakļaujiet karstumam, piemēram, saules gaismai, ugunij u tm.]
BRIDINAJUMS
Bateriju nedrīkst norīt. Pastāv ķīmiska apdeguma risks.
Šis produkts (komplektā iekļauta tālvadības pults) satur podziņelementa tipa bateriju. Ja šī baterija tiek norīta, jau divu stundu laikā tā var izraisīt smagus iekšējus apdegumus un navi.
Sargājiet jaunas un lietotas baterijas no bērniem.
Ja bateriju nodalījumu nevar slīngri aizvērt, pārtrauciet produkta lietošanu un sargājiet to no bērniem.
Ja jums ir aizdomas, ka baterijas ir norītas vai ievietotas jebkurā ķermeņa daļā, nekavējoties vērsieties pie ārsta.

⚠ Šiuo simbolu naudotojas informuojamas, kad su prietaisu pateiktuose dokumentuose pateikiama svarbių naudojimo ir priežiūros (techninės priežiūros) instrukcijų.

[DEMESIO: Netinkamai pakeitus maitinimo elementą, gresia sprogimo pavojus. Keiskite tik to paties arba lygiaverčio tipo maitinimo elementu.]
[DEMESIO: Saugokite nuo didelio karščio, pvz., saules šviesos, ugnies ir pan.]
DĖMESIO
Nenurykite maitinimo elemento, cheminio nudegimo pavojus.
Šiame gaminyje (su jun pateiktame nuotolinio valdymo pulte) yra diskinis maitinimo elementas. Nurijus diskinį maitinimo elementą, vos per 2 valandas jis gali sukelti smarkius vidinius nudegimus, keliančius žūties pavoju.
Saugokite naujus ir panaudotus maitinimo elementus nuo vaikų.
Jei maitinimo elemento skyrelis netinkamai užsidaro, nebenaudokite gaminio ir saugokite jį nuo vaikų.
Jei manote, kad maitinimo elementas galėjo būti nurytas arba kitaip pateko į bet kokią kūno dalį, nedelsdami kreipkitės į gydytojus.

D00790

⚠ Ovaj simbol ima svrhu upozoriti korisnika na postojanje važnih uputa za uporabu i održavanje (servisiranje) u dokumentaciji koja je isporučena uz mađaj

[OPREZ - Opasnost od eksplozije ukoliko se umetne neispravna baterija. Zamijenite bateriju samo istom ili ekvivalentnom.]
[OPREZ - Nemojte izlagati prekomjernoj topl ni poput sunčevih zraka, vatre i slično.]
UPOZORENJE
Nemojte gutati baterije, Opasnost od kemijskog sagonjevanja
(Doljinski upravljač isporučen). Ovaj proizvod sadrži bateriju u obliku gumba/kovanice. Ukoliko se baterija u obliku gumba/kovanice proguta, može uzrokovati ozbiljne unutarnje opekline u samo 2 sata i može dovesti do smrti
Držite nove i rabljene baterije podalje od dohvata djece
Ako pretinac za baterije nije čvrsto zatvoren, prestanite koristiti proizvod, držite ga podalje od dohvata djece
Ako smatrate da je došlo do gutanja baterije ili da je ona dospjela unutar bilo kojeg dijela tijela, zatražite hitnu medicinsku pomoć.

⚠ Ez a szimbólum arra szolgál, hogy figyelmeztesse a felhasználot a készülékhez mellékelt dokumentációban található fontos üzemeltetés és karbantartás (szervizelés) utasításokról.

[VIGYÁZAT! - Az elem helytelen cseréje robbanásveszélyes. Csak azonos vagy egyenértékű típusra cseréljé.]
[VIGYÁZAT! - Ne legye ki túlzott hőhatásnak, például napfénynek, tűznek stb.]
FIGYELMEZTETÉS!
Ne nyelje le az elemet, vegyi egés veszélye áll fenn!
A termék (mellé biztosított távirányító) gombelemmel rendelkezik. A gombelem lenyelés esetén súlyos belső égést okozhat mindössze 2 órán belül, ami halálhoz vezelhet
Tartsa távol gyermekektől az új és használt elemeket
Ha az elemtartó nem záródik biztonságosan, ne használja tovább a terméket és tartsa távol gyermekektől
Ha azt gyanítja, hogy valak megis lenyelt egy elemet vagy az más módon a testébe került, haladéktalanul forduljon orvoshoz

⚠ Dan is-simbolu hu intenzjonat biex iwissi lill-utent dwar il-preżenza tal istruzzjonijiet importanti dwar it-thaddim u l-manutenzjoni (servicing) fil-letteratura li takkumpanja t-tagħmir.

[ATTENZJONI - Perik u ta' splużjoni jekk il-batterija ma tinbidix kif suppost. Ibdel biss bi batterija tal-istess tip jew tal tip ekwivalenti.]
[ATTENZJONI – Tespunix ghal shana eccessiva bhal daw tax-xenix, nar jew affarijiet simili.]
TWISSIJA
Tiblax il-batterija, Perik u ta' Hruq Kimiku (Ir-remote control formut maghha). Dan il-prodott fih batterija tat-tip coin/button cell. Jekk il-batterija coin/button cell tinbela' tista' tikkawza hruc intern sever fisaghtejn u tista' twassal ghall-mewt
Zomm batterji godda u uzati 'l bogħod mit-tfal.
Jekk il kompartment tal batterija ma jinghalqax tajjeb, ikomplix tuza il prodott u żommu 'l boghod mit tfal
Jekk tahseb li l-batterji setghu nbelghu jew (pozitew fi kwalunkwe parti tal-tisem) filtex attenzjoni medika immediata

D00791

– CONTINUED –

Dit symbool is bedoeld om de gebruiker attent te maken op de aanwezigheid van belangrijke bedienings- en onderhoudsinstructies in de literatuur die bij het toestel bijgeleverd is.

[VOORZICHTIG - Explosiegevaar als de batterij onjuist wordt vervangen. Alleen vervangen met hetzelfde type.]
[VOORZICHTIG - Niet blootstellen aan overmatige hitte, zoals zon, vuur of dergelijke.]
WAARSCHUWING
De batterij niet inslikken, gevaar voor chemische brandwonden
(De afstandsbediening is meegeleverd) Dit product bevat een knoopcelbattery. Als de knoopcel battery wordt ingeslikt, kan deze binnen 2 uur emal ge interne brandwonden veroorzaken met de dood als gevolg.
Houd nieuwe en gebruikte batterijen weg van kinderen
Als het batterijcompartiment niet goed sluit, stop dan met het product te gebruiken en hou het weg van kinderen
Als u denkt dat batterijen ingeslikt werden of in het lichaam geplaatst werden, moet u onmiddellijk medische hulp zoeken

Ten symbol ma na celu zwrócenie uwagi użytkownika na ważne wskazówki dotyczące obsługi lub konserwacji (serwisowania), zawarte w dokumentacji załączonej do urządzenia.

[PRZESTROGA – Nieprawidłowa wymiana baterii grozi wybuchem. Baterię należy wymieniać wyłącznie na baterię tego samego lub równoważnego typu.]
[PRZESTROGA – Nie narażać na działanie wysokich temperatur, np. na promienie słoneczne, ogień itp.]
OSTRZEŻENIE
Nie połykać baterii - ryzyko oparzenia chemicznego
(Pilot zdalnego sterowania dostarczany z tym urządzeniem jest zasilany baterią pastylkową/guzikową)
Połknięcie baterii pastylkowej/guzikowej może w ciągu zaledwie 2 godzin spowodować poważne oparzenia wewnętrzne, które mogą prowadzić do śmierci
Nowe i zużyte baterie należy przechowywać poza zasięgiem dzieci.
Jeżeli komora baterii się nie zamyka, należy zaprzestać używania urządzenia i przechowywać go poza zasięgiem dzieci.
Jeżeli występuje podejrzenie połknięcia baterii lub umieszczenia jej w jakiejkolwiek części ciała, należy bezzwłocznie zasięgnąć porady lekarskiej

Pretende-se que este símbolo alerte o utilizador para a presença de importantes instruções de operação e de manutenção (serviço) na literatura que acompanha o aparelho.

[CUIDADO - Perigo de explosão caso a bateria seja substituída de forma incorrecta. Substitua apenas por outra igual ou equivalente.]
[CUIDADO - Não expor a fontes de calor excessivo tais como o sol, fogo ou semelhante.]
AVISO
Não ingerir a pilha. Perigo de Queimadura por Substâncias Químicas(O comando inclui uma pilha)
Este produto contém uma pilha tipo moeda/botão. Caso esta pilha tipo moeda/botão seja engolida, poderá provocar queimaduras internas graves em apenas 2 horas, podendo conduzir à morte.
Mantenha as pilhas novas e usadas longe das crianças.
Caso o compartimento da pilha não feche corretamente, pare de usar o produto e mantenha-o afastado das crianças
Caso acha que uma pilha poderá ter sido engolida alojada em qualquer parte do corpo, procure atenção médica imediata

D00792

Acest simbol are rolul de a alerta utilizatorul de prezența unor importante instrucțiuni de operare și întreținere (servisare) în documentația care însoțește aparatul.

ATENȚIE - Pericol de explozie dacă bateria este introdusă incorect. Înlocuiți doar cu același tip sau unul echivalent.
ATENȚIE - Nu expuneți la căldură excesivă, cum ar fi cea provenită de la razele soarelui, foc sau similare.
AVERTISMENT
Nu ingerați bateria, pericol de arsuri chimice
Produsul (sau telecomanda livrată cu el) conține o baterie tip nasture. Dacă aceasta este înghițită, poate cauza arsuri interne severe, în doar 2 ore, putând conduce la deces.
Nu lăsați bateriile noi sau uzate la îndemâna copiilor.
Dacă compartimentul bateriei nu se închide în siguranță, opriți utilizarea produsului și depozitați-l fără de copii.
Dacă credeți că bateriile au fost înghițite sau plasate în orice parte a corpului, solicitați imediat asistență medicală.

Acest simbol servește ca o informație pentru baterii, în special în documentele care au fost livrate cu aparatul, care conțin instrucțiuni de utilizare și de întreținere (servisare) a dispozitivului.

POZOR! - Ak sa batéria vymení nesprávne, hrozí nebezpečenstvo výbuchu. Ako náhradnú batériu používajte len rovnaký alebo ekvivalentný typ batérie.
POZOR! - Zariadenie nesmie byť vystavované pôsobeniu nadmernej teploty, ako napríklad vplyvom slnečného žiarenia, ohňa alebo podobným vplyvom.
VAROVANIE
Batéria sa nesmie dostať do organizmu, inak hrozí nebezpečenstvo chemických popálenín.
Súčasťou produktu a diaľkového ovládania sú mincové článkové batérie. V prípade prehltnutia batérie môže prísť k vnútorným popáleninám v priebehu 2 hodín, ktoré môžu spôsobiť smrť.
Nové aj použité batérie nesmú byť v dosahu detí.
Ak je uzatváranie priehradky na batériu poškodené, produkt sa nesmie ďalej používať a nesmie byť v dosahu detí.
Ak máte podozrenie, že dieťa batériu prehltlo alebo sa batéria iným spôsobom dostala do organizmu, okamžite vyhľadajte lekársku pomoc.

Ta simbol upozornika opozarja na navodila v zvezi z delovanjem in vzdrževanjem (servisiranjem) v literaturi, ki je priložena napravi.

POZOR - Če baterije ne zamenjate pravilno, lahko eksplodira. Zamenjajte samo z istim, ali ekvivalentnim tipom.
POZOR - Ne izpostavljajte prekomerni vročini toplote, kot je sončna svetloba, ogenj ali podobno.
OPOZORILO
Baterije se ne smejo zaužiti, obstaja nevarnost kemičnih opeklin.
Daljinski upravljalec, ki je priložen temu izdelku, vsebuje ploščato celično baterijo. Pogoltnjena baterija lahko povzroči resne notranje opekline in v roku dveh ur lahko privede do smrtnih poškodb.
Nove in porabljene baterije hranite izven dosega otrok.
Če se predal za baterije ne zapre pravilno, izdelek prenehajte uporabljati in ga hranite izven dosega otrok.
Če sumite, da je baterija pogoltnjena ali kako koli vdela v notranjost telesa, nemudoma poiščite zdravniško pomoč.

D00793

– CONTINUED –

Tämän merkin tarko tuksena on l mpittaa käyttäjalle laitteen mukana tulmitetuista tarkeista käyttö- ja kunnossapito (huolto) -ohjeista

HUOMIO: räjähdysvaara, jos paristo vaihdetaan väär Vaihda käytettyjen paristojen tilalle vain saman tai vastaavan tyypin paristoja
HUOMIO: ala altista laitteelle kuumuudelle, kuten aurinkoenvalolle, tulelle tai vastaavalle.
VAROITUS
Älä n ele paristoa sillä paristo a te ittaa kemal ise n palovaraman vaaran
Ilämä uote (sen mukana toimitettu kaukosäädin) sisältää nappiparisto Jus nappipar sto niellään, se voi aiheuttaa vakava sisäisiä palovammoja vain 2 tun ssa a voi johtaa kuolemaan
Pidä uudet a käytetyt paristot poissa lasten ulottuvilta
Jos par stoloke o ei suljeudu kunnolla lopeta tuotteen käyttö ja ida se poissa lasten ulottuvilta.
Jos luulet, että jok n nielläyt panston tai etta paristo on joutunut jonnekin kehon sisalle, kaanny heti lääkärin puoleen

Denna symbol är avsedd att göra användaren uppmärksam på att det finns viktiga bruks- och underhållsanvisningar i den literatur som levereras med apparaten.

VAKTTA FORSIKTIGHET om batterier ersätts med fel batterityp finns risk för explosion Ersätt endast med samma eller likvärdig typ.
VAKTTA FORSIKTIGHET – får ej utsättas för stark värme, såsom solsken, eld eller liknande.
VARNING
Sval, ej batterier, da det finns risk for kemiska brannskador
Hjärkontrollen som levereras med denna produkt innehaller ett knappcellsbatteri.
Om ett knappcellsbatteri sväljs, kan det på endast 2 timmar orsaka allvarliga invärtes brännskador och även leda till dödsfall.
Håll nya och använda batterier borta från barn
Om inte batterifacket stängs ordentligt bör produkten inte användas. Den bor också hållas borta från barn
Uppsok lakare omedelbart om du misstänker att batterier har svalts eller placerats inuti någon del av kroppen.

Þessu tákni er ætlað að láta notandann vita af nærveru mikilvægra notkunar- og viðhalds (þjónustu) leiðbeiningar í skjölunum sem fylgja tækinu

VARUÐ - Hætta á sprengingu ef rafhlaðan er endurnýjuð á rangan hátt. Endurnýjaðu aðeins með sömu eða jafngildri tegund.
VARUÐ - Ekki hafa berskjaldað gagnvart óhóflegum hita eins og sólskini, eldi, eða þvíumlíku
VIÐVÖRUN
Ekki borða rafhlöðuna, hætta á efnabruna. Þessi vara
(og fjarstýringin sem fylgir henni) inniheldur hnappafrafhlöðu. Ef hnappafrafhlaðan er gleypt getur það valdið alvarlegum innvortis bruna á aðeins 2 klukkustundum og getur leitt til dauða
Haltu nýjum og notuðum rafhlöðum frá börnum.
Ef rafhlaðan ekki lokast ekki tryggilega skaltu hætta að nota vöruna og halda henni frá börnum
Ef þú heldur að rafhlöður hafi verið gleyptar eða komið fyrir einhverrs staðar innan líkamans skaltu samstundis leita læknisaðstoðar

D00794

Dette symbolet skal gjøre brukeren klar over tilstedeværelsen av viktige drifts- og vedlikeholdsanvisninger (serviceanvisninger) i litteraturen som følger med apparatet.

[FORSIKTIG - Eksplosionsfare hvis batteriet skiftes ut feil. Skal bare skiftes ut med samme eller tilsvarende type.]
[FORSIKTIG - Ikke utsett for høye temperaturer som f.eks. sollys, ild og lignende.]
ADVARSEL
Batteriet må ikke svelges, kjemisk brannfare
[Tjenkontrollen som leveres med i dette produktet inneholder et knappcellebatteri. Hvis knappcellebatteriet svelges, kan det medføre alvorlige indre forbrenninger på bare to timer, og kan medføre død
Nye og brukte batterier skal oppbevares utilgjengelig for barn
Hvis batterirommet ikke lukkes riktig, må du slutte å bruke batteriet og holde det unna barn
Hvis du tror batteriene kan ha blitt svelget eller ført inn i kroppen, må du oppsøke lege umiddelbart

Tá an t-siombail seo beartaithe leis an chúram úd den úsáid agus an cothabháil (seirbhís sithe) san ábhar léitheoireachta a ghabhann leis an bhfearas

[RABHADH - Beidh baol pléasóidh ann ma athsholáthraítear an cadhnra go mícheart. Na hathsholáthraí an cadhnra ach leis an gcineál cadhnra céanna nó leis an chomhfhreamh.]
[RABHADH - Ná fág faoi thionchar iomarcach, amhail solas na gréine, tine, na a leithéid.]
RABHADH
Ná hith an cadhnra. Beidh baol dó cheimiceáilte ann
Tá cadhnra cnaipe le (sa tárgeadóra seolta chuig allán a tháinig leis an fárgeadóra seo). Má shloghtar an cadhnra cnaipchille, féadfaidh sé bheith ina chúis le dóinnéan inmheánacha tromchúiseacha agus le bás laobh istigh de 2 uair an chloig.
Coinnigh cadhnraí nua agus úsáidte amach ó leanaí
Mura ndéanann an t-úsáideoir cadhnraí go dtarraingíonn, eitigh as an taiscéal agus coinnigh amach ó leanaí é.
Má cheapann tú go n-slogadh cadhnraí nó gur cuireadh isteach sa chorp iad ar bhealach éigin, cuir fios ar dhochtúir láithreach bonn.

Dèst Symbol soll de Benotzer op wichteg Bedienungs- a Maintenanceuweisungen an déi Ënnerlage vum Apparat opmerksam maachen.

[OPPASSEN – Explosiounsgefor, wann d'Batterie net verdrëngungsgemäss ersat gëtt. Nëmme mat deem selwechten oder ähnlichen Typ ersetzen.]
[OPPASSEN – Net zu staarker Wärmi ewéi Sonnestrahlung, Feier o.ä. aussetzen.]
WARNUNG
D'Batterie net verschécken. Verätzungsgefor
[D'Telecommande bei i Dëst Produkt enthält eng Knapppzellebatterie. Wann d'Knapppzellebatterie verschluckt gëtt, ka se banneng nëmmen 2 Stonde schwéier innerlech Verbrennungen verursachen an zum Doud führen.]
Net a gebraucht Batterie vu Kanner ewechhalen.
Wann d'Batteriefach net sécher schléisst, verwennt d'Produkt net méi an hält et vu Kanner ewech
Wann Dir de Verdacht hutt, datt d'Batterie verschluckt oder an engem Deel vum Kierper placéiert ginn, gitt direkt bei den Dokter.

D00795

– CONTINUED –

## ■ Transmitter for the keyless entry system

Frequency band(s) in which the radio equipment operates: 433.92 MHz. Maximum radio-frequency power transmitted in the frequency band(s) in which the radio equipment operates: 80.5 dBuV/m@3m.

Manufacturer: SUBARU CORPORATION

Address: 1-1, Subaru-cho, Ota-shi, Gunma-ken, 373-8555, Japan

CE

Діапазон радіочастот, в якому працює устаткування: 433,92 МГц.

Максимальна потужність сигналу, що передається у діапазоні радіочастот, в якому працює устаткування: 80,5 дБмкВ/м на відстані 3м.

| | |
|---|---|
| [EN]<br>English | Hereby, ALPS ELECTRIC CO.,LTD , declares that the radio equipment type TB1G077<br>is in compliance with Directive 2014/53/EU<br>The full text of the EU declaration of conformity is available at the following internet address:<br>http://www.alps.com/products/common/pdf/HandUnit/TB1G077 pdf |
| [BG]<br>Bulgarian | С настоящото ALPS ELECTRIC CO.,LTD., декларира, че този тип радиосъоръжение TB1G077<br>е в съответствие с Директива 2014/53/ЕС.<br>Цялостният текст на ЕС декларацията за съответствие може да се намери на следния интернет адрес:<br>http://www.alps.com/products/common/pdf/HandUnit/TB1G077 pdf |
| [CS]<br>Czech | Tímto ALPS ELECTRIC CO.,LTD , prohlašuje, že typ rádiového zařízení TB1G077 je v souladu<br>se směrnicí 2014/53/EU.<br>Úplné znění EU prohlášení o shodě je k dispozici na této internetové adrese<br>http://www.alps.com/products/common/pdf/HandUnit/TB1G077 pdf |
| [DA]<br>Danish | Hermed erklærer ALPS ELECTRIC CO.,LTD., at radioudstyrstypen TB1G077 er i<br>overensstemmelse med direktiv 2014/53/EU.<br>EU-overensstemmelseserklæringens fulde tekst kan findes på følgende internetadresse:<br>http://www.alps.com/products/common/pdf/HandUnit/TB1G077 pdf |
| [DE]<br>German | Hiermit erklärt ALPS ELECTRIC CO.,LTD , dass der Funkanlagentyp TB1G077<br>der Richtlinie 2014/53/EU entspricht.<br>Der vollständige Text der EU-Konform tätserklärung :st unter der folgenden Internetadresse verfügbar:<br>http://www.alps.com/products/common/pdf/HandUnit/TB1G077 pdf |

D00612

| | |
|---|---|
| [ET]<br>Estonian | Käesolevaga deklareerib ALPS ELECTRIC CO.,LTD., et käesolev raadioseadme tüüp TB1G077<br>vastab direktiivi 2014/53/EL nõuetele.<br>ELi vastavusdeklaratsiooni täielik tekst on kättesaadav järgmisel internetiaadressil:<br>http://www.alps.com/products/common/pdf/HandUnit/TB1G077.pdf |
| [EL]<br>Greek | Με την παρούσα η ALPS ELECTRIC CO.,LTD., δηλώνει ότι ο ραδιοεξοπλισμός TB1G077<br>πληροί την οδηγία 2014/53/ΕΕ.<br>Το πλήρες κείμενο της δήλωσης συμμόρφωσης ΕΕ διατίθεται στην ακόλουθη ιστοσελίδα στο διαδίκτυο.<br>http://www.alps.com/products/common/pdf/HandUnit/TB1G077.pdf |
| [ES]<br>Spanish | Por la presente, ALPS ELECTRIC CO.,LTD., declara que el tipo de equipo radioeléctrico TB1G077<br>es conforme con la Directiva 2014/53/UE.<br>El texto completo de la declaración UE de conformidad está disponible en la dirección Internet siguiente.<br>http://www.alps.com/products/common/pdf/HandUnit/TB1G077.pdf |
| [FR]<br>French | Le soussigné, ALPS ELECTRIC CO.,LTD., déclare que l'équipement radioélectrique du type TB1G077<br>est conforme à la directive 2014/53/UE.<br>Le texte complet de la déclaration UE de conformité est disponible à l'adresse internet suivante:<br>http://www.alps.com/products/common/pdf/HandUnit/TB1G077.pdf |
| [IT]<br>Italian | Il fabbricante, ALPS ELECTRIC CO.,LTD., dichiara che il tipo di apparecchiatura radio TB1G077<br>è conforme alla direttiva 2014/53/UE.<br>Il testo completo della dichiarazione di conformità UE è disponibile al seguente indirizzo Internet:<br>http://www.alps.com/products/common/pdf/HandUnit/TB1G077.pdf |
| [LV]<br>Latvian | Ar šo ALPS ELECTRIC CO.,LTD., deklarē, ka radioiekārta TB1G077 atbilst Direktīvai 2014/53/ES.<br>Pilns ES atbilstības deklarācijas teksts ir pieejams šādā interneta vietnē:<br>http://www.alps.com/products/common/pdf/HandUnit/TB1G077.pdf |

D00613

– CONTINUED –

| | |
|---|---|
| [LT]<br>Lithuanian | Aš, ALPS ELECTRIC CO.,LTD., patvirtinu, kad radijo įrenginių tipas TB1G077 atitinka<br>Direktyva 2014/53/ES.<br>Visas ES atitikties deklaracijos tekstas prieinamas šiuo internetio adresu:<br>http://www.alps.com/products/common/pdf/HandUnit/TB1G077.pdf |
| [HR]<br>Croatian | ALPS ELECTRIC CO.,LTD., ovime izjavljuje da je radijska oprema tipa TB1G077 u skladu s<br>Direktivom 2014/53/EU<br>Cjeloviti tekst EU izjave o sukladnosti dostupan je na sljedećoj internetskoj adresi:<br>http://www.alps.com/products/common/pdf/HandUnit/TB1G077.pdf |
| [HU]<br>Hungarian | ALPS ELECTRIC CO.,LTD., igazolja, hogy a TB1G077 típusú rádióberendezés megfelel<br>a 2014/53/EU irányelvnek<br>Az EU-megfelelőségi nyilatkozat teljes szövege elérhető a következő internetes címen:<br>http://www.alps.com/products/common/pdf/HandUnit/TB1G077.pdf |
| [MT]<br>Maltese | B'dan, ALPS ELECTRIC CO.,LTD., niddikjara li dan it-tip ta' tagħmir tar-radju TB1G077<br>huwa konformi mad-Direttiva 2014/53/UE.<br>It-test kollu tad-dikjarazzjoni ta' konformità tal-UE huwa disponibbli f'dan l-indirizz tal-Internet li ġej:<br>http://www.alps.com/products/common/pdf/HandUnit/TB1G077.pdf |
| [NL]<br>Dutch | Hierbij verklaart ik, ALPS ELECTRIC CO.,LTD., dat het type radioapparatuur TB1G077<br>conform is met Richtlijn 2014/53/EU.<br>De volledige tekst van de EU-conformiteitsverklaring kan worden geraadpleegd op het volgende internetadres:<br>http://www.alps.com/products/common/pdf/HandUnit/TB1G077.pdf |
| [PL]<br>Polish | ALPS ELECTRIC CO.,LTD., niniejszym oświadcza, że typ urządzenia radiowego TB1G077<br>jest zgodny z dyrektywą 2014/53/UE.<br>Pełny tekst deklaracji zgodności UE jest dostępny pod następującym adresem internetowym:<br>http://www.alps.com/products/common/pdf/HandUnit/TB1G077.pdf |

D00614

| | |
|---|---|
| [PT]<br>Portuguese | O(a) abaixo assinado(a) ALPS ELECTRIC CO.,LTD., declara que o presente tipo de equipamento de rádio TB1G077 está em conformidade com a Diretiva 2014/53/UE.<br>O texto integral da declaração de conformidade está disponível no seguinte endereço de Internet:<br>http://www.alps.com/products/common/pdf/HandUnit/TB1G077.pdf |
| [RO]<br>Romanian | Prin prezenta, ALPS ELECTRIC CO.,LTD., declară că tipul de echipamente radio TB1G077 este în conformitate cu Directiva 2014/53/UE.<br>Textul integral al declarației UE de conformitate este disponibil la următoarea adresă internet:<br>http://www.alps.com/products/common/pdf/HandUnit/TB1G077.pdf |
| [SK]<br>Slovak | ALPS ELECTRIC CO.,LTD., týmto vyhlasuje, že rádiové zariadenie typu TB1G077 je v súlade so smernicou 2014/53/EÚ.<br>Úplné EÚ vyhlásenie o zhode je k dispozícii na tejto internetovej adrese:<br>http://www.alps.com/products/common/pdf/HandUnit/TB1G077.pdf |
| [SL]<br>Slovenian | ALPS ELECTRIC CO.,LTD., potrjuje, da je tip radijske opreme TB1G077 skladen z Direktivo 2014/53/EU.<br>Celotno besedilo izjave EU o skladnosti je na voljo na naslednjem spletnem naslovu:<br>http://www.alps.com/products/common/pdf/HandUnit/TB1G077.pdf |
| [FI]<br>Finish | ALPS ELECTRIC CO.,LTD., vakuuttaa, etta radiolaitetyyppi TB1G077 on direktiivin 2014/53/EU mukainen.<br>EU-vaatimustenmukaisuusvakuutuksen täysimittainen teksti on saatavilla seuraavassa internetosoitteessa:<br>http://www.alps.com/products/common/pdf/HandUnit/TB1G077.pdf |
| [SV]<br>Swedish | Härmed försäkrar ALPS ELECTRIC CO.,LTD., att denna typ av radioutrustning TB1G077 överensstämmer med direktiv 2014/53/EU.<br>Den fullständiga texten till EU-försäkran om överensstämmelse finns på följande webbadress:<br>http://www.alps.com/products/common/pdf/HandUnit/TB1G077.pdf |

D00615

– CONTINUED –

| | |
|---|---|
| [IS]<br>Icelandic | Hér, ALPS ELECTRIC CO.,LTD., lýsir yfir að radíóbúnaður tegund TB1G077 er í samræmi<br>við tilskipun 2014/53/ESB<br>The full text of ESB-samræmisyfirlýsing er í boði á eftirfarandi veffangi:<br>http://www.alps.com/products/common/pdf/HandUnit/TB1G077.pdf |
| [NO]<br>Norwegian | Herved ALPS ELECTRIC CO.,LTD., erklærer at radioutstyr type TB1G077 er i samsvar<br>med direktiv 2014/53/EU<br>Den fullstendige teksten i EU-erklæring er tilgjengelig på følgende internetteadresse:<br>http://www.alps.com/products/common/pdf/HandUnit/TB1G077.pdf |
| [GLE]<br>Irish | Dearbhaíonn ALPS ELECTRIC CO.,LTD. leis seo go bhfuil an cineál trealamh raidió TB1G077<br>in oiriúint le Treoir 2014/53/AE.<br>Tá téacs iomlán an Dearbhaithe Comhréireachta AE le fáil ag an seoladh idirlín seo a leanas:<br>http://www.alps.com/products/common/pdf/HandUnit/TB1G077.pdf |
| [LTZ]<br>Luxembourgish | Hiermatter deklaréiert ALPS ELECTRIC CO.,LTD., datt d'Funkanlage vum Typ TB1G077<br>konform mat der Direktiv 2014/53/EU sinn.<br>Den integralen Text vun der EU-Konformitéitserklarung ass op folgender Internetadress ze fannen:<br>http://www.alps.com/products/common/pdf/HandUnit/TB1G077.pdf |
| [UA]<br>Ukrainian | Цією декларацією ALPS ELECTRIC CO., LTD. заявляє, що тип радіообладнання<br>TB1G077 відповідає Технічному регламенту радіообладнання;<br>повний текст декларації про відповідність доступний на веб-сайті за такою<br>адресою:<br>https://www.alps.com/products/common/pdf/ukraine/HandUnit/TB1G077.pdf |

D00873

## ■ Receiver for the keyless entry system

Frequency band(s) in which the radio equipment operates: 433.92 MHz.

Manufacturer: SUBARU CORPORATION

Address: 1-1, Subaru-cho, Ota-shi, Gun-ma-ken, 373-8555, Japan

CE

Діапазон радіочастот, в якому працює устаткування: 433,92 МГц.

| | |
|---|---|
| [EN]<br>English | Hereby, ALPS ELECTRIC CO.,LTD., declares that the radio equipment type TD1G049<br>is in compliance with Directive 2014/53/EU.<br>The full text of the EU declaration of conformity is available at the following internet address:<br>http://www.alps.com/products/common/pdf/Tuner/TD1G049.pdf |
| [BG]<br>Bulgarian | С настоящото ALPS ELECTRIC CO.,LTD., декларира, че този тип радиосъоръжение TD1G049<br>е в съответствие с Директива 2014/53/ЕС.<br>Цялостният текст на ЕС декларацията за съответствие може да се намери на следния интернет адрес:<br>http://www.alps.com/products/common/pdf/Tuner/TD1G049.pdf |
| [CS]<br>Czech | Tímto ALPS ELECTRIC CO. LTD., prohlašuje, že typ rádiového zařízení TD1G049 je v souladu<br>se směrnicí 2014/53/EU.<br>Úplné znění EU prohlášení o shodě je k dispozici na této internetové adrese:<br>http://www.alps.com/products/common/pdf/Tuner/TD1G049.pdf |
| [DA]<br>Danish | Hermed erklærer ALPS ELECTRIC CO.,LTD., at radioudstyrstypen TD1G049 er i<br>overensstemmelse med direktiv 2014/53/EU.<br>EU-overensstemmelseserklæringens fulde tekst kan findes på følgende internetadresse.<br>http://www.alps.com/products/common/pdf/Tuner/TD1G049.pdf |
| [DE]<br>German | Hiermit erklärt ALPS ELECTRIC CO.,LTD., dass der Funkanlagentyp TD1G049<br>der Richtlinie 2014/53/EU entspricht<br>Der vollständige Text der EU-Konformitätserklärung ist unter der folgenden Internetadresse verfügbar:<br>http://www.alps.com/products/common/pdf/Tuner/TD1G049.pdf |
| [ET]<br>Estonian | Käesolevaga deklareerib ALPS ELECTRIC CO.,LTD., et kaesolev raadioseadme tüüp TD1G049<br>vastab direktiivi 2014/53/EL nõuetele.<br>ELi vastavusdeklaratsiooni täielik tekst on kättesaadav järgmisel internetiaadressil:<br>http://www.alps.com/products/common/pdf/Tuner/TD1G049.pdf |

D00617

– CONTINUED –

| | |
|---|---|
| [EL]<br>Greek | Με την παρούσα η/η ALPS ELECTRIC CO .,LTD., δηλώνει ότι ο ραδιοεξοπλισμός TD1G049<br>πληροί την οδηγία 2014/53/ΕΕ<br>Το πλήρες κείμενο της δήλωσης συμμόρφωσης ΕΕ διατίθεται στην ακόλουθη ιστοσελίδα στο διαδίκτυο:<br>http://www.alps.com/products/common/pdf/Tuner/TD1G049.pdf |
| [ES]<br>Spanish | Por la presente, ALPS ELECTRIC CO.,LTD., declara que el tipo de equipo radioeléctrico TD1G049<br>es conforme con la Directiva 2014/53/UE.<br>El texto completo de la declaración UE de conformidad está disponible en la dirección Internet siguiente:<br>http://www.alps.com/products/common/pdf/Tuner/TD1G049.pdf |
| [FR]<br>French | Le soussigné, ALPS ELECTRIC CO.,LTD., déclare que l'équipement radioélectrique du type TD1G049<br>est conforme à la directive 2014/53/UE<br>Le texte complet de la déclaration UE de conformité est disponible à l'adresse internet suivante:<br>http://www.alps.com/products/common/pdf/Tuner/TD1G049.pdf |
| [IT]<br>Italian | Il fabbricante, ALPS ELECTRIC CO. ,LTD ., dichiara che il tipo di apparecchiatura radio TD1G049<br>è conforme alla direttiva 2014/53/UE.<br>Il testo completo della dichiarazione di conformità UE è disponibile al seguente indirizzo Internet:<br>http://www.alps.com/products/common/pdf/Tuner/TD1G049.pdf |
| [LV]<br>Latvian | Ar šo ALPS ELECTRIC CO.,LTD., deklarē, ka radioiekārta TD1G049 atbilst Direktīvai 2014/53/ES.<br>Pilns ES atbilstības deklarācijas teksts ir pieejams šādā interneta vietnē:<br>http://www.alps.com/products/common/pdf/Tuner/TD1G049.pdf |
| [LT]<br>Lithuanian | Aš, ALPS ELECTRIC CO.,LTD., patvirtinu, kad radijo įrenginiu tipas TD1G049 atitinka<br>Direktyvą 2014/53/ES.<br>Visas ES atitikties deklaracijos tekstas prieinamas šiuo interneto adresu:<br>http://www.alps.com/products/common/pdf/Tuner/TD1G049.pdf |

D00618

| | |
|---|---|
| [HR]<br>Croatian | ALPS ELECTRIC CO.,LTD., ovime izjavljuje da je radijska oprema tipa TD1G049 u skladu s Direktivom 2014/53/EU<br>Cjeloviti tekst EU izjave o sukladnosti dostupan je na sljedećoj internetskoj adresi:<br>http://www.alps.com/products/common/pdf/Tuner/TD1G049.pdf |
| [HU]<br>Hungarian | ALPS ELECTRIC CO.,LTD., igazolja, hogy a TD1G049 típusú rádióberendezés megfelel a 2014/53/EU irányelvnek.<br>Az EU-megfelelőségi nyilatkozat teljes szövege elérhető a következő internetes címen:<br>http://www.alps.com/products/common/pdf/Tuner/TD1G049.pdf |
| [MT]<br>Maltese | B'dan, ALPS ELECTRIC CO.,LTD., niddikjara li dan it-tip ta' tagħmir tar-radju TD1G049 huwa konformi mad-Direttiva 2014/53/UE<br>It-test kollu tad-dikjarazzjoni ta' konformità tal-UE huwa disponibbli f'dan l-indirizz tal-Internet li ġej:<br>http://www.alps.com/products/common/pdf/Tuner/TD1G049.pdf |
| [NL]<br>Dutch | Hierbij verklaart ALPS ELECTRIC CO.,LTD., dat het type radioapparatuur TD1G049 conform is met Richtlijn 2014/53/EU.<br>De volledige tekst van de EU-conformiteitsverklaring kan worden geraadpleegd op het volgende internetadres:<br>http://www.alps.com/products/common/pdf/Tuner/TD1G049.pdf |
| [PL]<br>Polish | ALPS ELECTRIC CO.,LTD., niniejszym oświadcza, że typ urządzenia radiowego TD1G049 jest zgodny z dyrektywą 2014/53/UE.<br>Pełny tekst deklaracji zgodności UE jest dostępny pod następującym adresem internetowym:<br>http://www.alps.com/products/common/pdf/Tuner/TD1G049.pdf |
| [PT]<br>Portuguese | O(a) abaixo assinado(a) ALPS ELECTRIC CO.,LTD. declara que o presente tipo de equipamento de rádio TD1G049 está em conformidade com a Diretiva 2014/53/UE<br>O texto integral da declaração de conformidade está disponível no seguinte endereço de Internet:<br>http://www.alps.com/products/common/pdf/Tuner/TD1G049.pdf |

D00619

– CONTINUED –

| | |
|---|---|
| [RO]<br>Romanian | Prin prezenta, ALPS ELECTRIC CO.,LTD., declară ca tipul de echipamente radio TD1G049<br>este în conformitate cu Directiva 2014/53/UE.<br>Textul integral al declarației UE de conformitate este disponibil la următoarea adresă internet<br>http://www.alps.com/products/common/pdf/Tuner/TD1G049.pdf |
| [SK]<br>Slovak | ALPS ELECTRIC CO.,LTD , týmto vyhlasuje, že rádiové zariadenie typu TD1G049 je<br>v súlade so smernicou 2014/53/EÚ.<br>Úplné EÚ vyhlásenie o zhode je k dispozícii na tejto internetovej adrese<br>http://www.alps.com/products/common/pdf/Tuner/TD1G049.pdf |
| [SL]<br>Slovenian | ALPS ELECTRIC CO.,LTD., potrjuje, da je tip radijske opreme TD1G049 skladen z Direktivo<br>2014/53/EU.<br>Celotno besedilo izjave EU o skladnosti je na voljo na naslednjem spletnem naslovu:<br>http://www.alps.com/products/common/pdf/Tuner/TD1G049.pdf |
| [FI]<br>Finish | ALPS ELECTRIC CO.,LTD., vakuuttaa, että radiolaitetyyppi TD1G049 on direktiivin 2014/53/EU<br>mukainen<br>EU-vaatimustenmukaisuusvakuutuksen täysimittainen teksti on saatavilla seuraavassa internetosoitteessa:<br>http://www.alps.com/products/common/pdf/Tuner/TD1G049.pdf |
| [SV]<br>Swedish | Härmed försäkrar ALPS ELECTRIC CO.,LTD. att denna typ av radioutrustning TD1G049<br>överensstämmer med direktiv 2014/53/EU.<br>Den fullständiga texten till EU-försäkran om överensstämmelse finns på följande webbadress<br>http://www.alps.com/products/common/pdf/Tuner/TD1G049.pdf |
| [IS]<br>Icelandic | Hér, ALPS ELECTRIC CO.,LTD., lýsir yfir að radíóbúnaður tegund TD1G049 er í samræmi<br>við tilskipun 2014/53/ESB.<br>The fullur texti af ESB-samræmisyfirlýsing er í boði á eftirfarandi veffangi:<br>http://www.alps.com/products/common/pdf/Tuner/TD1G049.pdf |

D00620

| | |
|---|---|
| [NO]<br>Norwegian | Herved ALPS ELECTRIC CO.,LTD., erklærer at radioutstyr type TD1G049 er i samsvar<br>med direktiv 2014/53/EU.<br>Den fullstendige teksten i EU-erklæring er tilgjengelig på følgende internettadresse:<br>http://www.alps.com/products/common/pdf/Tuner/TD1G049.pdf |
| [GLE]<br>Irish | Dearbhaíonn ALPS ELECTRIC CO.,LTD. le seo go bhfuil an cineál trealaimh raidió TD1G049<br>in oiriúint le Treoir 2014/53/AE.<br>Tá téacs iomlán an Dearbhaithe Comhréireachta AE le fáil ag an seoladh Idirlín seo a leanas<br>http://www.alps.com/products/common/pdf/Tuner/TD1G049.pdf |
| [LTZ]<br>Luxembourgish | Heimatter deklaréiert ALPS ELECTRIC CO.,LTD., datt d'Funkanlage vum Typ TD1G049<br>konform mat der Direktiv 2014/53/EU sinn.<br>Den integralen Text vun der EU-Konformitéitserklärung ass op folgender Internetadress ze fannen:<br>http://www.alps.com/products/common/pdf/Tuner/TD1G049.pdf |
| [UA]<br>Ukrainian | Цією декларацією ALPS ELECTRIC CO., LTD. заявляє, що тип радіообладнання TD1G049<br>відповідає Технічному регламенту радіообладнання;<br>повний текст декларації про відповідність доступний на веб-сайті за такою адресою:<br>https://www.alps.com/products/common/pdf/ukraine/Tuner/TD1G049.pdf |

D00884

– CONTINUED –

## ■ Access key

Transmitter:
Model: 14AHK
Operation frequency: 433.92 MHz
Maximum output power (ERP): 0.03 mW
Manufacturer: DENSO CORPORATION
Address: 1-1, Showa-cho, Kariya-shi, Aichi-ken, 448-8661, Japan

передавач: модель: 14AHK
смугу радіочастот: 433.92 МГц
максимальну потужність
випромінювання (ERP): 0.03 мВт

виробник: DENSO CORPORATION
адреса: 1-1, Showa-cho, Kariya-shi, Aichi-ken, 448-8661, Japan

D00894

## NOTE

- **Dispose of used batteries according to the local laws.**
- **Replace only with the same or equivalent type recommended by the manufacturer.**

Hereby, DENSO CORPORATION declares that the radio equipment type 14AHK is in compliance with Directive 2014/53/EU
The full text of the EU declaration of conformity is available at the following internet address:
https://www.denso.co.jp/en/contactus/form/doc/index.html
02

DENSO CORPORATION vakuuttaa, että radiolaitetyyppi 14AHK on direktiivin 2014/53/EU mukainen.
EU-vaatimustenmukaisuusvakuutuksen täysimittainen teksti on saatavilla seuraavassa internetosoitteessa
https://www.denso.co.jp/en/contactus/form/doc/index.html
03

Hierbij verklaart ik, DENSO CORPORATION, dat het type radioapparatuur 14AHK conform is met Richtlijn 2014/53/EU.
De volledige tekst van de EU-conformiteitsverklaring kan worden geraadpleegd op het volgende internetadres
https://www.denso.co.jp/en/contactus/form/doc/index.html
01

Le soussigné, DENSO CORPORATION, déclare que l'équipement radioélectrique du type 14AHK est conforme à la directive 2014/53/UE
Le texte complet de la déclaration UE de conformité est disponible à l'adresse internet suivante:
https://www.denso.co.jp/en/contactus/form/doc/index.html
04

Härmed försäkrar DENSO CORPORATION att denna typ av radioutrustning 14AHK överensstämmer med direktiv 2014/53/EU
Den fullständiga texten till EU-försäkran om överensstämmelse finns på följande webbadress
https://www.denso.co.jp/en/contactus/form/doc/index.html
05

D00601

Hermed erklærer DENSO CORPORATION, at radioudstyrstypen 14AHK er i overensstemmelse med direktiv 2014/53/EU
EU-overensstemmelseserklæringens fulde tekst kan findes på følgende internetadresse:
https://www.denso.co.jp/en/contactus/form/doc/index.html
06

Hiermit erklärt DENSO CORPORATION, dass der Funkanlagentyp 14AHK der Richtlinie 2014/53/EU entspricht.
Der vollständige Text der EU-Konformitätserklärung ist unter der folgenden Internetadresse verfügbar:
https://www.denso.co.jp/en/contactus/form/doc/index.html
07

Με την παρούσα, η DENSO CORPORATION, δηλώνει ότι ο ραδιοεξοπλισμός 14AHK πληροί την οδηγία 2014/53/ΕΕ
Το πλήρες κείμενο της δήλωσης συμμόρφωσης ΕΕ διατίθεται στην ακόλουθη ιστοσελίδα στο διαδίκτυο
https://www.denso.co.jp/en/contactus/form/doc/index.html
08

Il fabbricante, DENSO CORPORATION, dichiara che il tipo di apparecchiatura radio 14AHK è conforme alla direttiva 2014/53/UE.
Il testo completo della dichiarazione di conformità UE è disponibile al seguente indirizzo Internet:
https://www.denso.co.jp/en/contactus/form/doc/index.html
09

Por la presente, DENSO CORPORATION declara que el tipo de equipo radioeléctrico 14AHK es conforme con la Directiva 2014/53/UE
El texto completo de la declaración UE de conformidad está disponible en la dirección Internet siguiente:
https://www.denso.co.jp/en/contactus/form/doc/index.html
10

D00602

O(a) abaixo assinado(a) DENSO CORPORATION declara que o presente tipo de equipamento de rádio 14AHK está em conformidade com a Diretiva 2014/53/UE
O texto integral da declaração de conformidade está disponível no seguinte endereço de Internet
https://www.denso.co.jp/en/contactus/form/doc/index.html
11

B'dan DENSO CORPORATION, niddikjara li dan it-tip ta' tagħmir tar-radju 14AHK huwa konformi mad-Direttiva 2014/53/UE
It-test kollu tad-dikjarazzjoni ta' konformità tal-UE huwa disponibbli f'dan l-indirizz tal-Internet li ġej
https://www.denso.co.jp/en/contactus/form/doc/index.html
12

Käesolevaga deklareerib DENSO CORPORATION, et käesolev raadioseadme tüüp 14AHK vastab direktiivi 2014/53/EL nõuetele
ELi vastavusdeklaratsiooni täielik tekst on kättesaadav järgmisel internetiaadressil
https://www.denso.co.jp/en/contactus/form/doc/index.html
13

DENSO CORPORATION igazolja, hogy a 14AHK típusú rádióberendezés megfelel a 2014/53/EU irányelvnek
Az EU-megfelelőségi nyilatkozat teljes szövege elérhető a következő internetes címen
https://www.denso.co.jp/en/contactus/form/doc/index.html
14

DENSO CORPORATION tímto vyhlašuje, že rádiové zařízení typu 14AHK je v souladu se směrnicí 2014/53/EU
Úplné EU vyhlášení o shodě je k dispozici na tomto internetovém adresu
https://www.denso.co.jp/en/contactus/form/doc/index.html
15

D00603

Tímto DENSO CORPORATION prohlašuje, že typ rádiového zařízení 14AHK je v souladu se směrnicí 2014/53/EU
Úplné znění EU prohlášení o shodě je k dispozici na této internetové adrese:
https://www.denso.co.jp/en/contactus/form/doc/index.html
16

DENSO CORPORATION potrjuje, da je tip radijske opreme 14AHK skladen z Direktivo 2014/53/EU
Celotno besedilo izjave EU o skladnosti je na voljo na naslednjem spletnem naslovu:
https://www.denso.co.jp/en/contactus/form/doc/index.html
17

As, DENSO CORPORATION, patvirtina, kad radijo įrenginių tipas 14AHK atitinka Direktyvą 2014/53/ES
Visas ES atitikties deklaracijos tekstas prieinamas šiuo interneto adresu.
https://www.denso.co.jp/en/contactus/form/doc/index.html
18

Ar šo DENSO CORPORATION deklarē, ka radiokārtas 14AHK atbilst Direktīvai 2014/53/LS
Pilns LS atbilstības deklarācijas teksts ir pieejams šādā interneta vietnē
https://www.denso.co.jp/en/contactus/form/doc/index.html
19

DENSO CORPORATION niniejszym oświadcza, że typ urządzenia radiowego 14AHK jest zgodny z dyrektywą 2014/53/UE.
Pełny tekst deklaracji zgodności UE jest dostępny pod następującym adresem internetowym
https://www.denso.co.jp/en/contactus/form/doc/index.html
20

D00604

Hér með lýsir DENSO CORPORATION yfir því að 14AHK er í samræmi við grunnkröfur og aðrar kröfur, sem gerðar eru í tilskipun 2014/53/ESB
Samræmisyfirlýsing er einnig aðgengileg á eftirfarandi vefslóð
https://www.denso.co.jp/en/contactus/form/doc/index.html
21

DENSO CORPORATION erklærer at 14AHK er i overensstemmelse med direktiv 2014/53/EU.
Samsvarserklæringen i fu llekst er tilgjengelig på følgende internettadresse
https://www.denso.co.jp/en/contactus/form/doc/index.html
22

С настоящото DENSO CORPORATION декларира, че този тип радиосъоръжение 14AHK е в съответствие с Директива 2014/53/ЕС
Цялостният текст на ЕС декларацията за съответствие може да се намери на следния интернет адрес.
https://www.denso.co.jp/en/contactus/form/doc/index.html
23

Prin prezenta, DENSO CORPORATION declară că tipul de echipamente radio 14AHK este în conformitate cu Directiva 2014/53/UE.
Textul integral al declarației UE de conformitate este disponibil la următoarea adresă internet
https://www.denso.co.jp/en/contactus/form/doc/index.html
24

DENSO CORPORATION ovime izjavljuje da je radijska oprema tipa 14AHK u skladu s Direktivom 2014/53/EU
Cjelovati tekst EU izjave o sukladnosti dostupan je na sljedećoj internetskoj adresi
https://www.denso.co.jp/en/contactus/form/doc/index.html
27

D00882

– CONTINUED –

Овиме, DENSO CORPORATION изјављује да је радио опрема тип усаглашена са Директивом 2014/53/EU.
Цео текст ЕУ декларације о усаглашености доступан је на следећој интернет адреси:
https://www.denso.com/global/en/contact-us/doc/

Amb aquest document, DENSO CORPORATION declara que el tipus d'equipament radioelèctric es conforme a la Directiva 2014/53/UE
El text complet de la declaració UE de conformitat està disponible en la següent adreça d'Internet:
https://www.denso.com/global/en/contact-us/doc/

Işbu belge: DENSO CORPORATION telsiz ekipmanı tipinin 2014/53/AB sayılı Direktife uygun olduğunu beyan eder.
AB uygunluk beyanının tam metni aşağıdaki internet adresinde mevcuttur:
https://www.denso.com/global/en/contact-us/doc/

D00889

справжнім DENSO CORPORATION заявляє, що тип радіообладнання відповідає Технічному регламенту радіообладнання;
повний текст декларації про відповідність доступний на веб-сайті за такою адресою:
https://www.denso.com/global/en/contact-us/doc/

The latest "DECLARATION of CONFORMITY" (DoC) is available at the following address:
https://www.denso.co.jp/en/contactus/form/doc/index.html

D00890

## ■ Immobilizer

### ▼ Models with "keyless access with push-button start system"

D00606

D00607

D00608

D00609

D00610

– CONTINUED –

D00611

Справжнім SUBARU CORPORATION заявляє, що тип радіообладнання SSPIMB02 відповідає Технічному регламенту радіообладнання;
КАБІНЕТ МІНІСТРІВ УКРАЇНИ ПОСТАНОВА №.355

Повний текст декларації про відповідність доступний на веб-сайті за такою адресою:
http://www.subaru.eu/owner

Діапазон частот : 119 - 135 kHz
Максимальна потужність радіочастотного випромінювання : 55dBμA/m @10m

Адреса: 1-1, Subaru-cho, Ota-shi, Gunma 373-8555 JAPAN

D00893

Address: 1-1, Subaru-cho, Ota-shi, Gunma 373-8555, Japan

▼ **Models without “keyless access with push-button start system”**

▽ **Models with immobilizer ECU**

D00678

D00679

D00680

D00681

– CONTINUED –

D00682

D00683

CE

Address: 3-260 Toyota, Oguchi-cho, Niwa-gun, Aichi 480-0195, Japan

▽ **Models without immobilizer ECU**

Transmitter:
Model: FJ16-2
Operation frequency: 134.2 kHz
Maximum output power (ERP): 0.000169 mW
Manufacturer: SUBARU CORPORATION
Address: 1-1, Subaru-cho, Ota-shi, Gun-ma-ken, 373-8555, Japan

Hereby, SUBARU CORPORATION declares that the radio equipment type FJ16-2 is in compliance with Directive 2014/53/EU.
The full text of the EU declaration of conformity is available at the following internet address:
https://www.cerso.co.jp/en/contactus/form/doc/index.html

SUBARU CORPORATION vakuuttaa, että radiolaitetyyppi FJ16-2 on direktiivin 2014/53/EU mukainen.
EU-vaatimustenmukaisuusvakuutuksen täysimittainen teksti on saatavilla seuraavassa internetosoitteessa:
https://www.cerso.co.jp/en/contactus/form/doc/index.html

Hierbij verklaart SUBARU CORPORATION, dat het type radioapparatuur FJ16-2 conform is met Richtlijn 2014/53/EU.
De volledige tekst van de EU-conformiteitsverklaring kan worden geraadpleegd op het volgende internetadres:
https://www.cerso.co.jp/en/contactus/form/doc/index.html

Le soussigné, SUBARU CORPORATION, déclare que l'équipement radioélectrique du type FJ16-2 est conforme à la directive 2014/53/UE.
Le texte complet de la déclaration UE de conformité est disponible à l'adresse internet suivante :
https://www.cerso.co.jp/en/contactus/form/doc/index.html

Härmed försäkrar SUBARU CORPORATION att denna typ av radioutrustning FJ16-2 överensstämmer med direktiv 2014/53/EU.
Den fullständiga texten till EU-försäkran om överensstämmelse finns på följande webbadress:
https://www.cerso.co.jp/en/contactus/form/doc/index.html

D00684

Hiermit erklärt SUBARU CORPORATION, dass der Funkanlagentyp FJ16-2 der Richtlinie 2014/53/EU entspricht.
Der vollständige Text der EU-Konformitätserklärung ist unter der folgenden Internetadresse verfügbar:
https://www.cerso.co.jp/en/contactus/form/doc/index.html

Με την παρούσα, η SUBARU CORPORATION, δηλώνει ότι ο ραδιοεξοπλισμός FJ16-2 πληροί την οδηγία 2014/53/ΕΕ.
Το πλήρες κείμενο της δήλωσης συμμόρφωσης ΕΕ είναι διαθέσιμο στη διεύθυνση του διαδικτύου:
https://www.cerso.co.jp/en/contactus/form/doc/index.html

Il fabbricante SUBARU CORPORATION, dichiara che il tipo di apparecchiatura radio FJ16-2 è conforme alla direttiva 2014/53/UE.
Il testo completo della dichiarazione di conformità UE è disponibile al seguente indirizzo Internet:
https://www.cerso.co.jp/en/contactus/form/doc/index.html

Por la presente, SUBARU CORPORATION declara que el tipo de equipo radioeléctrico FJ16-2 es conforme con la Directiva 2014/53/UE.
El texto completo de la declaración UE de conformidad está disponible en la dirección Internet siguiente:
https://www.cerso.co.jp/en/contactus/form/doc/index.html

D00685

Ojal abaixo assinado(a) SUBARU CORPORATION declara que o presente tipo de equipamento de rádio FJ16-2 está em conformidade com a Diretiva 2014/53/UE.
O texto integral da declaração de conformidade está disponível no seguinte endereço de Internet:
https://www.cerso.co.jp/en/contactus/form/doc/index.html

B'dan, SUBARU CORPORATION, niddikjara li dan it-tip ta' tagħmir tar-radju FJ16-2 huwa konformi mad-Direttiva 2014/53/UE.
It-test ta' tul tad-dikjarazzjoni ta' konformità tal-UE huwa disponibbli f'dan l-indirizz tal-Internet li ġej:
https://www.cerso.co.jp/en/contactus/form/doc/index.html

Käesolevaga deklareerib SUBARU CORPORATION, et käesolev raadiosaatmisseadme tüüp FJ16-2 vastab direktiivi 2014/53/EL nõuetele.
ELi vastavusdeklaratsiooni terviktekst on kättesaadav järgmisel internetiaadressil:
https://www.cerso.co.jp/en/contactus/form/doc/index.html

SUBARU CORPORATION ijazinja, li-tipa ta' FJ16-2 tipusa rádióberendezés megfelel a 2014/53/EU irányelvnek.
Az EU megfelelőségi nyilatkozat teljes szövege elérhető a következő internetes címen:
https://www.cerso.co.jp/en/contactus/form/doc/index.html

SUBARU CORPORATION týmto vyhlasuje, že rádiové zariadenie typu FJ16-2 je v súlade so smernicou 2014/53/EU.
Úplné EU vyhlásenie o zhode je k dispozícii na tejto internetovej adrese:
https://www.cerso.co.jp/en/contactus/form/doc/index.html

D00686

– CONTINUED –

Tímto SUBARU CORPORATION prohlašuje, že typ rádiového zařízení FJ16-2 je v souladu se směrnicí 2014/53/EU
Úplné znění EU prohlášení o shodě je k dispozici na této internetové adrese
https://www.denso.co.jp/en/contactus/form/doc/index.html

16

SUBARU CORPORATION potrjuje, da je ta radijska oprema FJ16-2 skladen z Direktivo 2014/53/EU
Celotno besedilo izjave EU o skladnosti je na voljo na naslednjem spletnem naslovu
https://www.denso.co.jp/en/contactus/form/doc/index.html

17

A3. SUBARU CORPORATION patvirtina, kad radijo ir ničinio tipas FJ16-2 atitinka Direktyvą 2014/53/ES
Visas ES atitikties deklaracijos tekstas prieinamas šiuo internetu adresu
https://www.denso.co.jp/en/contactus/form/doc/index.html

18

Ar šo SUBARU CORPORATION deklare, ka radio ekarta FJ16-2 atbilst Direktivai 2014/53/ES
Pilns ES atbilstības deklarācijas teksts ir pieejams šādā internetā vietnē
https://www.denso.co.jp/en/contactus/form/doc/index.html

19

SUBARU CORPORATION niniejszym oświadcza, że typ urządzenia radiowego FJ16-2 jest zgodny z dyrektywą 2014/53/UE
Pełny tekst deklaracji zgodności UE jest dostępny pod następującym adresem internetowym
https://www.denso.co.jp/en/contactus/form/doc/index.html

20

D00687

Hér með lýsir SUBARU CORPORATION yfir þvi að FJ16-2 er i samræmi við grunnkrofur og aðrar kröfur, sem gerðar eru i tilskipun 2014/53/EU
Samræmisyfirlýsing er einnig aðgengileg á ofhrfarandi veistað
https://www.denso.co.jp/en/contactus/form/doc/index.html

21

SUBARU CORPORATION erklærer at FJ16-2 er i overensstemmelse med direktiv 2014/53/EU
Samsvarserklæringen i fulltekst er tilgjengelig på følgende internetadresse
https://www.denso.co.jp/en/contactus/form/doc/index.html

22

С настоящото SUBARU CORPORATION декларира, че този тип радиосъоръжение FJ16-2 е в съответствие с Директива 2014/53/ЕС
Цялостният текст на ЕС декларацията за съответствие може да се намери на следния интернет адрес
https://www.denso.co.jp/en/contactus/form/doc/index.html

23

Prin prezenta, SUBARU CORPORATION declară că tipul de echipamente radio FJ16-2 este în conformitate cu Directiva 2014/53/UE
Textul integral al declarației UE de conformitate este disponibil la următoarea adresă internet:
https://www.denso.co.jp/en/contactus/form/doc/index.html

24

SUBARU CORPORATION izvime izjavljuje da je radijska oprema tipa FJ16-2 u skladu s Direktivom 2014/53/EU
Cjelovati tekst EU izjave o sukladnosti dostapan je na sljedećoj internetskoj adresi
https://www.denso.co.jp/en/contactus/form/doc/index.html

25

CE

The latest "DECLARATION of CONFORMITY" (DoC) is available at the following address:
https://www.denso.co.jp/en/contactus/form/doc/index.html

D00688

## ■ Subaru Rear Vehicle Detection (SRVD)

| | |
|---|---|
| | ADC Automotive Distance Control Systems GmbH<br>Peter-Dornier-Strasse 10, 88131 Lindau, Germany |

| | |
|---|---|
| **ОПРОСТЕНА ЕС ДЕКЛАРАЦИЯ ЗА СЪОТВЕТСТВИЕ** | С настоящото ADC Automotive Distance Control Systems GmbH декларира, че този тип радиосъоръжение SRR 3-A е в съответствие с Директива 2014/53/ЕС. Цялостният текст на ЕС декларацията за съответствие може да се намери на следния интернет адрес:<br>http://continental-automotive-approvals.com/ |
| | радиочестотната лента или ленти, в която или които работи радиосъоръжението:<br>24.05–24.25 GHz |
| | максималната радиочестотна мощност, излъчвана в радиочестотната лента или ленти, в която или които работи радиосъоръжението:<br>100mW (20 dBm) Peak EIRP |

| | |
|---|---|
| **DECLARACIÓN UE DE CONFORMIDAD SIMPLIFICADA** | Por la presente, ADC Automotive Distance Control Systems GmbH declara que el tipo de equipo radioeléctrico SRR 3-A es conforme con la Directiva 2014/53/UE. El texto completo de la declaración UE de conformidad está disponible en la dirección Internet siguiente: |
| | http://continental-automotive-approvals.com/ |
| | Banda o bandas de frecuencia en las que opera el equipo radioeléctrico:<br>24.05–24.25 GHz |
| | Potencia máxima de radiofrecuencia transmitida en la banda o bandas de frecuencia en las que opera el equipo radioeléctrico:<br>100mW (20 dBm) Peak EIRP |

| | |
|---|---|
| **ZJEDNODUŠENÉ EU PROHLÁŠENÍ O SHODĚ** | Tímto ADC Automotive Distance Control Systems GmbH prohlašuje, že typ rádiového zařízení SRR 3-A je v souladu se směrnicí 2014/53/EU. Úplné znění EU prohlášení o shodě je k dispozici na této internetové adrese:<br>http://continental-automotive-approvals.com/ |
| | Kmitočtové pásmo (kmitočtová pásma), v němž (v nichž) rádiové zařízení pracuje:<br>24.05–24.25 GHz |
| | Maximální radiofrekvenční výkon vysílaný v kmitočtovém pásmu (v kmitočtových pásmech), v němž (v nichž) je rádiové zařízení provozováno:<br>100mW (20 dBm) Peak EIRP |

| | |
|---|---|
| **FORENKLET EU-OVERENSSTEMMELSESERKLÆRING** | Hermed erklærer ADC Automotive Distance Control Systems GmbH, at radioudstyrstypen SRR 3-A er i overensstemmelse med direktiv 2014/53/EU. EU-overensstemmelseserklæringens fulde tekst kan findes på følgende internetadresse:<br>http://continental-automotive-approvals.com/ |
| | Frekvensbånd, som radioudstyret fungerer på:<br>24.05–24.25 GHz |
| | Maksimal radiofrekvenseffekt, der udsendes i de frekvensbånd, som radioudstyret fungerer på:<br>100mW (20 dBm) Peak EIRP |

| | |
|---|---|
| **VEREINFACHTE EU-KONFORMITÄTSERKLÄRUNG** | Hiermit erklärt ADC Automotive Distance Control Systems GmbH, dass der Funkanlagentyp SRR 3-A der Richtlinie 2014/53/EU entspricht. Der vollständige Text der EU-Konformitätserklärung ist unter der folgenden Internetadresse verfügbar:<br>http://continental-automotive-approvals.com/ |
| | Das Frequenzband oder die Frequenzbänder, in dem bzw. denen die Funkanlage betrieben wird:<br>24.05–24.25 GHz |
| | Die in dem Frequenzband oder den Frequenzbändern, in dem bzw. denen die Funkanlage betrieben wird, abgestrahlte maximale Sendeleistung:<br>100mW (20 dBm) Peak EIRP |

D00689

– CONTINUED –

| | |
|---|---|
| **LIHTSUSTATUD ELI VASTAVUSDEKLARATSIOON** | Kaesolevaga deklareerib ADC Automotive Distance Control Systems GmbH, et kaesolev raadioseadme tuup SRR 3-A vastab direktiivi 2014/53/EL nouetele. ELi vastavusdeklaratsiooni taielik tekst on kättesaadav järgmisel internetiaadressil: http://continental-automotive-approvals.com/ |
| | Sagedusriba(d), millel raadioseade töötab: 24.05–24.25 GHz |
| | Raadioseadme toosagedus(t)el edastatav maksimaalne saatevõimsus: 100mW (20 dBm) Peak EIRP |

| | |
|---|---|
| **ΑΠΛΟΥΣΤΕΥΜΕΝΗ ΔΗΛΩΣΗ ΣΥΜΜΟΡΦΩΣΗΣ ΕΕ** | Με την παρούσα η ADC Automotive Distance Control Systems GmbH, δηλώνει ότι ο ραδιοεξοπλισμός SRR 3-A πληροί την οδηγία 2014/53/ΕΕ. Το πλήρες κείμενο της δήλωσης συμμόρφωσης ΕΕ διατίθεται στην ακόλουθη ιστοσελίδα στο διαδίκτυο: http://continental-automotive-approvals.com/ |
| | Οι ζώνες συχνοτήτων στις οποίες λειτουργεί ο ραδιοεξοπλισμός: 24.05–24.25 GHz |
| | η μέγιστη ραδιοηλεκτρική ισχύς στις ζώνες συχνοτήτων στις οποίες λειτουργεί ο ραδιοεξοπλισμός: 100mW (20 dBm) Peak EIRP |

| | |
|---|---|
| **SIMPLIFIED EU DECLARATION OF CONFORMITY** | Hereby, ADC Automotive Distance Control Systems GmbH declares that the radio equipment type SRR 3-A is in compliance with Directive 2014/53/EU. The full text of the EU declaration of conformity is available at the following internet address: http://continental-automotive-approvals.com/ |
| | Frequency band(s) in which the radio equipment operates: 24.05–24.25 GHz |
| | Maximum radio-frequency power transmitted in the frequency band(s) in which the radio equipment operates: |
| | 100mW (20 dBm) Peak EIRP |

| | |
|---|---|
| **DECLARATION UE DE CONFORMITE SIMPLIFIEE** | Le soussigné, ADC Automotive Distance Control Systems GmbH, déclare que l'équipement radioélectrique du type SRR 3-A est conforme à la directive 2014/53/UE. Le texte complet de la déclaration UE de conformité est disponible à l'adresse internet suivante: http://continental-automotive-approvals.com/ |
| | Bandes de fréquences utilisées par l'équipement radioélectrique: 24.05–24.25 GHz |
| | Puissance de radiofréquence maximale transmise sur les bandes de fréquences utilisées par l'équipement radioélectrique: 100mW (20 dBm) Peak EIRP |

| | |
|---|---|
| **POJEDNOSTAVLJENA EU IZJAVA O SUKLADNOSTI** | ADC Automotive Distance Control Systems GmbH ovime izjavljuje da je radijska oprema tipa SRR 3-A u skladu s Direktivom 2014/53/EU. Cjelovit tekst EU izjave o sukladnosti dostupan je na sljedećoj internetskoj adresi: http://continental-automotive-approvals.com/ |
| | Frekvencijski pojas (frekvencijski pojasi) u kojem (kojima) radijska oprema radi: 24.05–24.25 GHz |
| | Najveća radiofrekvencijska snaga koja se prenosi u frekvencijskom pojasu (frekvencijskim pojasima) u kojem (kojima) radijska oprema radi: 100mW (20 dBm) Peak EIRP |

| | |
|---|---|
| **DICHIARAZIONE DI CONFORMITÀ UE SEMPLIFICATA** | Il fabbricante, ADC Automotive Distance Control Systems GmbH, dichiara che il tipo di apparecchiatura radio SRR 3-A è conforme alla direttiva 2014/53/UE. Il testo completo della dichiarazione di conformità UE è disponibile al seguente indirizzo Internet: http://continental-automotive-approvals.com/ |
| | Bande di frequenza di funzionamento dell'apparecchiatura radio: 24.05–24.25 GHz |
| | Massima potenza a radiofrequenza trasmessa nelle bande di frequenza in cui opera l'apparecchiatura radio: 100mW (20 dBm) Peak EIRP |

D00690

| | |
|---|---|
| **VIENKARŠOTA ES ATBILSTĪBAS DEKLARĀCIJA** | Ar šo ADC Automotive Distance Control Systems GmbH deklarē, ka radiolekārta SRR 3-A atbilst Direktīvai 2014/53/ES. Pilns ES atbilstības deklarācijas teksts ir pieejams šādā internета vietnē:<br>http://continental-automotive-approvals.com/ |
| | Frekvenču joslā(-ās), kurā(-ās) radiolekārtas darbojas<br>24.05–24.25 GHz |
| | Frekvenču joslā(-ās), kurā(-ās) darbojas radiolekārtas maksimālo pārraidītā signāla jaudu:<br>100mW (20 dBm); Peak EIRP |

| | |
|---|---|
| **SUPAPRASTINTA ES ATITIKTIES DEKLARACIJA** | Aš, ADC Automotive Distance Control Systems GmbH, patvirtinu, kad radijo įrenginių tipas SRR 3-A atitinka Direktyvą 2014/53/ES. Visas ES atitikties deklaracijos tekstas prieinamas šiuo internetо adresu:<br>http://continental-automotive-approvals.com/ |
| | Dažnių juosta(-os), kurioje (-iose) veikia radijo įrenginiai:<br>24.05–24.25 GHz |
| | Didžiausia radijo dažnių galia, perduodama toje (tose) dažnių juostoje (-ose), kurioje (-iose) veikia radijo įrenginiai<br>100mW (20 dBm); Peak EIRP |

| | |
|---|---|
| **EGYSZERŰSÍTETT EU-MEGFELELŐSÉGI NYILATKOZAT** | ADC Automotive Distance Control Systems GmbH igazolja, hogy a SRR 3-A típusú rádióberendezés megfelel a 2014/53/EU irányelvnek. Az EU megfelelőségi nyilatkozat teljes szövege elérhető a következő internетes címen:<br>http://continental-automotive-approvals.com/ |
| | Az(ok) a frekvenciasáv(ok), amely(ek)en a rádióberendezés működik:<br>24.05–24.25 GHz |
| | Az abban a frekvenciasávban vagy azokban a frekvenciasávokban továbbított max. imális jelerősség, amely(ek)ben a rádióberendezés üzemel:<br>100mW (20 dBm); Peak EIRP |

| | |
|---|---|
| **DIKJARAZZJONI SSIMPLIFIKATA TA' KONFORMITÀ TAL-UE** | B'dan, ADC Automotive Distance Control Systems GmbH, niddikjara li dan it-tip ta' tagħmir tar-radju SRR 3-A huwa konformi mad-Direttiva 2014/53/UE. It-test ħieles tad-dikjarazzjoni ta' konformità tal-UE huwa disponibbli f'dan l-indirizzi tal-Internet li ġej:<br>http://continental-automotive-approvals.com/ |
| | Il-medda(i)/medd(a) tal-frekwenza li jaħdem fihom il-tagħmir tar-radju:<br>24.05–24.25 GHz |
| | Il-potenza massima tal-frekwenza tar-radju trażmessa fil-medda(medd(a) tal-frekwenza li jaħdem fihom it-tagħmir tar-radju:<br>100mW (20 dBm); Peak EIRP |

| | |
|---|---|
| **VEREENVOUDIGDE EU-CONFORMITEITSVERKLARING** | Hierbij verklaart ADC Automotive Distance Control Systems GmbH, dat het type radioapparatuur SRR 3-A conform is met Richtlijn 2014/53/EU. De volledige tekst van de EU-conformiteitsverklaring kan worden geraadpleegd op het volgende internetadres:<br>http://continental-automotive-approvals.com/ |
| | Frequentieband(en) waarin de radioapparatuur functioneert:<br>24.05–24.25 GHz |
| | Maximaal radiofrequent vermogen uitgezonden in de frequentieband(en) waarin de radioapparatuur functioneert:<br>100mW (20 dBm); Peak EIRP |

| | |
|---|---|
| **UPROSZCZONA DEKLARACJA ZGODNOŚCI UE** | ADC Automotive Distance Control Systems GmbH niniejszym oświadcza, że typ urządzenia radiowego SRR 3-A jest zgodny z dyrektywą 2014/53/UE. Pełny tekst deklaracji zgodności UE jest dostępny pod następującym adresem internetowym:<br>http://continental-automotive-approvals.com/ |
| | Zakres(-ów) częstotliwości, w którym (których) pracuje urządzenie radiowe:<br>24.05–24.25 GHz |
| | Maksymalnej mocy częstotliwości radiowej emitowanej w zakresie(-ach) częstotliwości, w którym (których) pracuje urządzenie radiowe:<br>100mW (20 dBm); Peak EIRP |

D00691

– CONTINUED –

| | |
|---|---|
| **DECLARAÇÃO UE DE CONFORMIDADE SIMPLIFICADA** | O(a) abaixo assinado(a) ADC Automotive Distance Control Systems GmbH declara que o presente tipo de equipamento de rádio SRR 3-A está em conformidade com a Diretiva 2014/53/UE. O texto integral da declaração de conformidade está disponível no seguinte endereço de Internet:<br>http://continental-automotive-approvals.com/ |
| | A(s) banda(s) de frequências em que o equipamento de rádio funciona<br>24.05–24.25 GHz |
| | A potência máx. da radiofrequências transmitida na(s) banda(s) de frequências em que o equipamento de rádio funciona.<br>100mW (20 dBm) Peak EIRP |

| | |
|---|---|
| **DECLARAȚIA UE DE CONFORMITATE SIMPLIFICATĂ** | Prin prezenta, ADC Automotive Distance Control Systems GmbH declară că tipul de echipamente radio SRR 3-A este în conformitate cu Directiva 2014/53/UE. Textul integral al declarației UE de conformitate este disponibil la următoarea adresă internet:<br>http://continental-automotive-approvals.com/ |
| | Banda (benzile) de frecvențe în care funcționează echipamentul radio<br>24.05–24.25 GHz |
| | Puterea maximă de radiofrecvență transmisă în banda (benzile) de frecvențe în care funcționează echipamentul radio.<br>100mW (20 dBm) Peak EIRP |

| | |
|---|---|
| **ZJEDNODUŠENÉ EÚ VYHLÁSENIE O ZHODE** | ADC Automotive Distance Control Systems GmbH týmto vyhlasuje, že rádiové zariadenie typu SRR 3-A je v súlade so smernicou 2014/53/EÚ. Úplné EÚ vyhlásenie o zhode je k dispozícii na tejto internetovej adrese:<br>http://continental-automotive-approvals.com/ |
| | Frekvenčné pásmo resp. pásma, v ktorých rádiové zariadenie pracuje:<br>24.05–24.25 GHz |
| | Maximálny vysokofrekvenčný výkon prenášaný vo frekvenčnom pásme, resp. pásmach, v ktorých rádiové zariadenie pracuje:<br>100mW (20 dBm) Peak EIRP |

| | |
|---|---|
| **POENOSTAVLJENA IZJAVA EU O SKLADNOSTI** | ADC Automotive Distance Control Systems GmbH potrjuje, da je tip radijske opreme SRR 3-A skladen z Direktivo 2014/53/EU. Celotno besedilo izjave EU o skladnosti je na voljo na naslednjem spletnem naslovu:<br>http://continental-automotive-approvals.com/ |
| | Frekvenčni pas ali pasovi, na katerih deluje radijska oprema.<br>24.05–24.25 GHz |
| | Največja energija za radijsko frekvenco, preneseno po frekvenčnem pasu ali pasovih, na katerih radijska oprema deluje:<br>100mW (20 dBm) Peak EIRP |

| | |
|---|---|
| **YKSINKERTAISTETTU EU-VAATIMUSTENMUKAISUUSVAKUUTUS** | ADC Automotive Distance Control Systems GmbH vakuuttaa, että radiolaitetyyppi SRR 3-A on direktiivin 2014/53/EU mukainen. EU-vaatimustenmukaisuusvakuutuksen täysimittainen teksti on saatavilla seuraavassa internetosoitteessa:<br>http://continental-automotive-approvals.com/ |
| | Radiotaajuudet, joilla radiolaite toimii.<br>24.05–24.25 GHz |
| | Suurin mahdollinen lähetysteho radiotaajuuksilla, joilla radiolaite toimii<br>100mW (20 dBm) Peak EIRP |

| | |
|---|---|
| **FÖRENKLAD EU-FÖRSÄKRAN OM ÖVERENSSTÄMMELSE** | Härmed försäkrar ADC Automotive Distance Control Systems GmbH att denna typ av radioutrustning SRR 3-A överensstämmer med direktiv 2014/53/EU. Den fullständiga texten till EU-försäkran om överensstämmelse finns på följande webbadress:<br>http://continental-automotive-approvals.com/ |
| | Det eller de frekvensband där radioutrustningen arbetar:<br>24.05–24.25 GHz |
| | Den maximala radiofrekvenseffekt som överförs inom det eller de frekvensbanden där radioutrustningen arbetar:<br>100mW (20 dBm) Peak EIRP |

D00692

| | |
|---|---|
| **EINFÖLDUÐ ESB SAMRÆMISYFIRLÝSING** | Hér með lýsir ADC Automotive Distance Control Systems GmbH því yfir, að fjarskiptabúnaðurinn að gerð SRR 3-A er í samræmi við tilskipun 2014/53/ ESB. Textinn í fullri lengd um Samræmisyfirlýsingu ESB er aðgengilegur á eftirfarandi veffangi: http://continental.automotive-approvals.com/ |
| | Bandbreidd(ir), sem fjarskiptabúnaðurinn starfar í: 24.05–24.25 GHz |
| | Hámarks fjarskiptatíðni sendistyrkleika í bandbreiddinni/bandbreiddunum sem fjarskiptabúnaðurinn starfar í: 100mW (20 dBm) Peak EIRP |

| | |
|---|---|
| **BASİTLESTİRİLMİŞ AB UYGUNLUK BEYANI** | İşbu belge ile, ADC Automotive Distance Control Systems GmbH şirketi SRR 3-A tipi radyo ekipmanının 2014/53/AB sayılı direktife uygun olduğunu beyan eder. AB uygunluk beyanının tam metni aşağıdaki İnternet adresinde mevcuttur http://continental.automotive-approvals.com/ |
| | Radyo cihazının çalıştığı frekans bandı/bantları: 24.05–24.25 GHz |
| | Radyo ekipmanının çalıştığı frekans bandında/bantlarında iletilen maksimum radyo frekansı gücü: 100mW (20 dBm) Peak EIRP |

| | |
|---|---|
| **СПРОЩЕНА ДЕКЛАРАЦІЯ ЄС ПРО ВІДПОВІДНІСТЬ** | Цим ADC Automotive Distance Control Systems GmbH заявляє, що радіообладнання типу SRR3-A відповідає вимогам Директиви 2014/53/EU. Повний текст декларації ЄС про відповідність доступний за наступною адресою в мережі Інтернет: http://continental.automotive-approvals.com/ |
| | Частотний діапазон(-и), в якому працює радіообладнання: 24.05–24.25 ГГц |
| | Максимальна потужність радіочастотного сигналу, що передається у частотному діапазоні(-ах), в якому працює радіообладнання: 100 мВт (20 дБм) Пікова ефективна потужність випромінювання |

D00885

– CONTINUED –

## ■ Tire pressure monitoring system

| | | |
|---|---|---|
| English | EN | Manufacturer : Schrader Electronics Ltd.<br>Address : 11 Technology Park, Belfast Road, Antrim BT41 1QS, Northern Ireland United Kingdom<br><br>Model No : SHR3<br>Frequency : 433.92 MHz<br>Power : 23 dBm<br><br>Hereby, Schrader Electronics Ltd. declares that the radio equipment type SHR3 is in compliance with Directive 2014/53/EU<br>The full text of the EU declaration of conformity is available at the following internet address<br>http://www.tpmseuroshop.com/documents/declaration_conformities |
| Bulgarian | BG | С настоящото Schrader Electronics Ltd. декларира, че този тип радиосъоръжение SHR3 е в съответствие с Директива 2014/53/ЕС.<br>Цялостният текст на ЕС декларацията за съответствие може да се намери на следния интернет адрес:<br>http://www.tpmseuroshop.com/documents/declaration_conformities |
| Spanish | ES | Por la presente, Schrader Electronics Ltd. declara que el tipo de equipo radioeléctrico SHR3 es conforme con la Directiva 2014/53/UE.<br>El texto completo de la declaración UE de conformidad está disponible en la dirección Internet siguiente<br>http://www.tpmseuroshop.com/documents/declaration_conformities |
| Croatian | HR | Schrader Electronics Ltd. ovime izjavljuje da je radijska oprema tipa SHR3 u skladu s Direktivom 2014/53/EU<br>Cjelovit tekst EU izjave o sukladnosti dostupan je na sljedećoj internetskoj adresi<br>http://www.tpmseuroshop.com/documents/declaration_conformities |
| Czech | CS | Tímto Schrader Electronics Ltd. prohlašuje, že typ rádiového zařízení SHR3 je v souladu se směrnicí 2014/53/EU.<br>Úplné znění EU prohlášení o shodě je k dispozici na této internetové adrese:<br>http://www.tpmseuroshop.com/documents/declaration_conformities |

D00694

| | | |
|---|---|---|
| Danish | DA | Hermed erklærer Schrader Electronics Ltd., at radioudstyrstypen SHR3 er i overensstemmelse med direktiv 2014/53/EU.<br>EU-overensstemmelseserklæringens fulde tekst kan findes på følgende internetadresse<br>http://www.tpmseuroshop.com/documents/declaration_conformities |
| Dutch | NL | Hierbij verklaart ik, Schrader Electronics Ltd., dat het type radioapparatuur SHR3 conform is met Richtlijn 2014/53/EU<br>De volledige tekst van de EU-conformiteitsverklaring kan worden geraadpleegd op het volgende internetadres:<br>http://www.tpmseuroshop.com/documents/declaration_conformities |
| German | DE | Hiermit erklärt Schrader Electronics Ltd., dass der Funkanlagentyp SHR3 der Richtlinie 2014/53/EU entspricht<br>Der vollständige Text der EU-Konformitätserklärung ist unter der folgenden Internetadresse verfügbar:<br>http://www.tpmseuroshop.com/documents/declaration_conformities |
| Estonian | ET | Käesolevaga deklareerib Schrader Electronics Ltd, et käesolev raadioseadme tüüp SHR3 vastab direktiivi 2014/53/EL nõuetele.<br>ELi vastavusdeklaratsiooni täielik tekst on kättesaadav järgmisel internetiaadressil:<br>http://www.tpmseuroshop.com/documents/declaration_conformities |
| Finish | FI | Schrader Electronics Ltd vakuuttaa, että radiolaitetyyppi SHR3 on direktiivin 2014/53/EU mukainen.<br>EU-vaatimustenmukaisuusvakuutuksen täysimittainen teksti on saatavilla seuraavassa internetosoitteessa:<br>http://www.tpmseuroshop.com/documents/declaration_conformities |

D00695

– CONTINUED –

| | | |
|---|---|---|
| French | FR | Le soussigné, Schrader Electronics Ltd. déclare que l'équipement radioélectrique du type SHR3 est conforme à la directive 2014/53/UE.<br>Le texte complet de la déclaration UE de conformité est disponible à l'adresse internet suivante.<br>http://www.tpmseuroshop.com/documents/declaration_conformities |
| Greek | EL | Με την παρούσα ο/η Schrader Electronics Ltd., δηλώνει ότι ο ραδιοεξοπλισμός SHR3 πληροί την οδηγία 2014/53/ΕΕ.<br>Το πλήρες κείμενο της δήλωσης συμμόρφωσης ΕΕ διατίθεται στην ακόλουθη ιστοσελίδα στο διαδίκτυο<br>http://www.tpmseuroshop.com/documents/declaration_conformities |
| Hungarian | HU | Schrader Electronics Ltd. igazolja, hogy a SHR3 típusú rádióberendezés megfelel a 2014/53/EU irányelvnek.<br>Az EU-megfelelőségi nyilatkozat teljes szövege elérhető a következő internetes címen<br>http://www.tpmseuroshop.com/documents/declaration_conformities |
| Italian | IT | Il fabbricante, Schrader Electronics Ltd., dichiara che il tipo di apparecchiatura radio SHR3 è conforme alla direttiva 2014/53/UE.<br>Il testo completo della dichiarazione di conformità UE è disponibile al seguente indirizzo Internet.<br>http://www.tpmseuroshop.com/documents/declaration_conformities |
| Latvian | LV | Ar šo Schrader Electronics Ltd. deklarē, ka radiotehnika SHR3 atbilst Direktīvai 2014/53/ES.<br>Pilns ES atbilstības deklarācijas teksts ir pieejams šādā interneta vietnē.<br>http://www.tpmseuroshop.com/documents/declaration_conformities |
| Lithuanian | LT | Aš, Schrader Electronics Ltd., patvirtinu, kad radijo įrenginių tipas SHR3 atitinka Direktyvą 2014/53/ES.<br>Visas ES atitikties deklaracijos tekstas prieinamas šiuo interneto adresu:<br>http://www.tpmseuroshop.com/documents/declaration_conformities |

D00696

| | | |
|---|---|---|
| Maltese | MT | B'dan, Schrader Electronics Ltd. niddikjara li dan it-tip ta' taghmir tar-radju SHR3 huwa konformi mad-Direttiva 2014/53/UE<br>It-test kollu tad-dikjarazzjoni ta' konformità tal-UE huwa disponibbli f'dan l-indirizz tal-Internet li ġej:<br>http://www.tpmseuroshop.com/documents/declaration_conformites |
| Polish | PL | Schrader Electronics Ltd. niniejszym oświadcza, że typ urządzenia radiowego SHR3 jest zgodny z dyrektywą 2014/53/UE.<br>Pełny tekst deklaracji zgodności UE jest dostępny pod następującym adresem internetowym:<br>http://www.tpmseuroshop.com/documents/declaration_conformites |
| Portuguese | PT | O(a) abaixo assinado(a) Schrader Electronics Ltd. declara que o presente tipo de equipamento de rádio SHR3 está em conformidade com a Diretiva 2014/53/UE<br>O texto integral da declaração de conformidade está disponível no seguinte endereço de Internet<br>http://www.tpmseuroshop.com/documents/declaration_conformites |
| Romanian | RO | Prin prezenta, Schrader Electronics Ltd. declară că tipul de echipamente radio SHR3 este în conformitate cu Directiva 2014/53/UE<br>Textul integral al declarației UE de conformitate este disponibil la următoarea adresă internet:<br>http://www.tpmseuroshop.com/documents/declaration_conformites |
| Slovak | SK | Schrader Electronics Ltd. týmto vyhlasuje, že rádiové zariadenie typu SHR3 je v súlade so smernicou 2014/53/EÚ<br>Úplné EÚ vyhlásenie o zhode je k dispozícii na tejto internetovej adrese:<br>http://www.tpmseuroshop.com/documents/declaration_conformites |
| Slovenian | SL | Schrader Electronics Ltd. potrjuje, da je tip radijske opreme SHR3 skladen z Direktivo 2014/53/EU.<br>Celotno besedilo izjave EU o skladnosti je na voljo na naslednjem spletnem naslovu:<br>http://www.tpmseuroshop.com/documents/declaration_conformites |
| Swedish | SV | Härmed försäkrar Schrader Electronics Ltd. att denna typ av radioutrustning SHR3 överensstämmer med direktiv 2014/53/EU<br>Den fullständiga texten till EU-försäkran om överensstämmelse finns på följande webbadress.<br>http://www.tpmseuroshop.com/documents/declaration_conformites |

D00697

– CONTINUED –

## ■ LF Antenna

Model: FJ16-1
Operation frequency: 134.2 kHz
Maximum output power (ERP): 6.195 mW
Manufacturer: SUBARU CORPORATION
Address: 1-1, Subaru-cho, Ota-shi, Gunma-ken, 373-8555, Japan

передавач: модель: FJ16-1
смугу радіочастот: 134,2 кГц
максимальну потужність
випромінювання (ERP): 6.195 мВт

виробник: SUBARU CORPORATION
адреса: 1-1, Subaru-cho, Ota-shi, Gunma-ken, 373-8555, Japan

D00895

Hereby, SUBARU CORPORATION declares that the radio equipment type FJ16-1 is in compliance with Directive 2014/53/EU
The full text of the EU declaration of conformity is available at the following internet address:
https://www.subaru.co.jp/en/contactus/form/doc/index.html

SUBARU CORPORATION vakuuttaa, että radiolaitetyyppi FJ16-1 on direktiivi 2014/53/EU mukainen
EU-vaatimustenmukaisuusvakuutuksen täysimittainen teksti on saatavilla seuraavassa internetosoitteessa
https://www.subaru.co.jp/en/contactus/form/doc/index.html

Hierbij verklaart dat, SUBARU CORPORATION, dat het type radioapparatuur FJ16-1 conform is met Richtlijn 2014/53/EU
De volledige tekst van de EU conformiteitsverklaring kan worden geraadpleegd op het volgende internetadres:
https://www.subaru.co.jp/en/contactus/form/doc/index.html

Le soussigné, SUBARU CORPORATION, déclare que l'équipement radioélectrique du type FJ16-1 est conforme à la directive 2014/53/UE
Le texte complet de la déclaration UE de conformité est disponible à l'adresse internet suivante:
https://www.subaru.co.jp/en/contactus/form/doc/index.html

Hermed försäkrar SUBARU CORPORATION att denna typ av radioutrustning FJ16-1 överensstämmer med direktiv 2014/53/EU
Den fullständiga texten till EU-försäkran om överensstämmelse finns på följande webbadress:
https://www.subaru.co.jp/en/contactus/form/doc/index.html

D00698

Hermed erklærer SUBARU CORPORATION, at radioudstyrstypen FJ16-1 er i overensstemmelse med direktiv 2014/53/EU
EU-overensstemmelseserklæringens fuldstændige tekst findes på følgende internetadresse:
https://www.subaru.co.jp/en/contactus/form/doc/index.html

Hiermit erklärt SUBARU CORPORATION, dass der Funkanlagentyp FJ16-1 der Richtlinie 2014/53/EU entspricht
Der vollständige Text der EU-Konformitätserklärung ist unter der folgenden Internetadresse verfügbar:
https://www.subaru.co.jp/en/contactus/form/doc/index.html

Με την παρούσα, η SUBARU CORPORATION, δηλώνει ότι ο ραδιοεξοπλισμός FJ16-1 πληροί την οδηγία 2014/53/ΕΕ
Το πλήρες κείμενο της δήλωσης περιεχομένου ΕΕ διατίθεται στην ακόλουθη ιστοσελίδα στο διαδίκτυο
https://www.subaru.co.jp/en/contactus/form/doc/index.html

Il sottoscritto, SUBARU CORPORATION, dichiara che il tipo di apparecchiatura radio FJ16-1 è conforme alla direttiva 2014/53/UE
Il testo completo della dichiarazione di conformità UE è disponibile al seguente indirizzo Internet
https://www.subaru.co.jp/en/contactus/form/doc/index.html

Por la presente, SUBARU CORPORATION declara que el tipo de equipo radioeléctrico FJ16-1 es conforme con la Directiva 2014/53/UE
El texto completo de la declaración UE de conformidad está disponible en la dirección Internet siguiente:
https://www.subaru.co.jp/en/contactus/form/doc/index.html

D00699

O(a) abaixo assinado(a) SUBARU CORPORATION declara que o presente tipo de equipamento de radio FJ16-1 está em conformidade com a Diretiva 2014/53/UE.
O texto integral da declaração de conformidade está disponível no seguinte endereço de Internet:
https://www.denso.co.jp/en/contactus/form/doc/index.html

11

Bidan SUBARU CORPORATION, niddikjara li dan il tip tal tagħmir tar-radju FJ16-1 huwa konformi mad-Direttiva 2014/53/UE
Il test ko ku tad dikjarazzjoni tal konformità tal UE huwa disponibbli f'dan l-indirizz tal-Internet li ġej:
https://www.denso.co.jp/en/contactus/form/doc/index.html

12

Kaesolevaga dekareerib SUBARU CORPORATION, et kaesolev raadiovaadme tüüp FJ16-1 vastab direktiivi 2014/53/EL nõuetele
EU vastavusdeklaratsiooni tarelik tekst on kattesaadav järgnevse internetiaadressi
https://www.denso.co.jp/en/contactus/form/doc/index.html

13

SUBARU CORPORATION igazolja, hogy a FJ16-1 típusú rádióberendezés megfelel a 2014/53/EU irányelvnek
Az EU megfelelőségi nyilatkozat teljes szövege elérhető a következő internetes címen
https://www.denso.co.jp/en/contactus/form/doc/index.html

14

SUBARU CORPORATION týmto vyhlasuje, že radiové zariadenie typu FJ16-1 je v súlade so smernicou 2014/53/EU
Úplné EU vyhlásenie o zhode je k dispozícii na tejto internetovej adrese
https://www.denso.co.jp/en/contactus/form/doc/index.html

15

D00700

Tímto SUBARU CORPORATION prohlašuje, že typ radiového zařízení FJ16-1 je v souladu se směrnicí 2014/53/EU
Úplné znění EU prohlášení o shodě je k dispozici na této internetové adrese
https://www.denso.co.jp/en/contactus/form/doc/index.html

16

SUBARU CORPORATION potrjuje, da je tip radijske opreme FJ16-1 skladen z Direktivo 2014/53/EU
Celotno besedilo izjave EU o skladnosti je na voljo na naslednjem spletnem naslovu:
https://www.denso.co.jp/en/contactus/form/doc/index.html

17

Aš, SUBARU CORPORATION, patvirtinu, kad radijo įrenginių tipas FJ16-1 atitinka Direktyvą 2014/53/ES
Visas ES atitikties deklaracijos tekstas prieinamas siuo internetu adresu:
https://www.denso.co.jp/en/contactus/form/doc/index.html

18

Ar šo SUBARU CORPORATION deklarē, ka radiolekārta FJ16-1 atbilst Direktivai 2014/53/ES
Pilns ES atbilstības deklarācijas teksts ir pieejams šādā internetā vietnē
https://www.denso.co.jp/en/contactus/form/doc/index.html

19

SUBARU CORPORATION niniejszym oświadcza, że typ urządzenia radiowego FJ16-1 jest zgodny z dyrektywą 2014/53/UE.
Pełny tekst deklaracji zgodności UE jest dostępny pod następującym adresem internetowym:
https://www.denso.co.jp/en/contactus/form/doc/index.html

20

D00701

Her nöð lýsir SUBARU CORPORATION yfir því að FJ16-1 er í samræmi við grunnkrofur og aðrar kröfur, sem gerðar eru í tilskipun 2014/53/EU
Samræmisyfirlýsing er einnig aðgengileg á eftirfarandi vefslóð
https://www.denso.co.jp/en/contactus/form/doc/index.html

21

SUBARU CORPORATION erklærer at FJ16-1 er i overensstemmelse med direktiv 2014/53/EU
Samsvarserklæringen i tilfellekst er tilgjengelig på følgende internetladresse:
https://www.denso.co.jp/en/contactus/form/doc/index.html

22

С настоящото SUBARU CORPORATION декларира, че този тип радиосъоръжение FJ16-1 е в съответствие с Директива 2014/53/ЕС
Целостният текст на ЕС декларацията за съответствие може да се намери на следния интернет адрес:
https://www.denso.co.jp/en/contactus/form/doc/index.html

23

Prin prezenta, SUBARU CORPORATION declară că tipul de echipamente radio FJ16-1 este în conformitate cu Directiva 2014/53/UE
Textul integral al declarației UE de conformitate este disponibil la următoarea adresă internet:
https://www.denso.co.jp/en/contactus/form/doc/index.html

24

SUBARU CORPORATION uvnitř izjavljuje da je radijska oprema tipa FJ16-1 u skladu s Direktivom 2014/53/EU
Cjeloviti tekst EU izjave o sukladnosti dostupan je na sljedećoj internetskoj adresi:
https://www.denso.co.jp/en/contactus/form/doc/index.html

25

D00891

– CONTINUED –

справжнім SUBARU CORPORATION заявляє, що тип радіообладнання відповідає Технічному регламенту радіообладнання;
повний текст декларації про відповідність доступний на веб-сайті за такою адресою:
https://www.denso.com/global/en/contact-us/doc/

The latest "DECLARATION of CONFORMITY" (DoC) is available at the following address:
https://www.denso.co.jp/en/contactus/form/doc/index.html

D00892

## Importer Information

| | | |
|---|---|---|
| United Kingdom | Subaru (UK) Ltd | IM House, South Drive Coleshill Warwickshire B46 1DF, United Kingdom |
| Finland | I.M. Automotive Ltd | I.M. House NVD Complex Brown's Barn Baldonnell Co. Dublin |
| Netherlands | N.V. Subaru Benelux | Zwarteweg 88, 1431 VM AALSMEER, THE NETHERLANDS |
| France | SUBARU FRANCE SAS | P.A. Les Béthunes, 1 Avenue du Fief, BP 10432 - St-Ouen-l'Aumône, 95005 Cergy-Pontoise Cedex |
| Sweden | Subaru Nordic AB | Starrvägen 15 232 61 ARLÖV, Sweden |
| Denmark | Subaru Nordic AB | Starrvägen 15 232 61 ARLÖV, Sweden |

D00673

| | | |
|---|---|---|
| Germany | Subaru Deutschland GmbH | Mielestrasse 6, 61169 Friedberg, Germany |
| Greece | Subaru Italia S. p. A. | 20156 MILANO - Via Montefeltro, 6/A, Italia |
| Italy | Subaru Italia S. p. A. | 20156 MILANO - Via Montefeltro, 6/A, Italia |
| Spain | SUBARU ESPAÑA S.A | C/ Alcalá, 65 28014 Madrid España |
| Malta | Liaco Limited | Liaco Limited Mosta Road Lija, LJA 9012 Malta |
| Estonia | Subaru Nordic AB | Box 21041, 200 21 MALMÖ Starrvägen 15 232 61 ARLÖV |

D00674

– CONTINUED –

| | | |
|---|---|---|
| Hungary | Emil Frey Import Kft | Mogyoródi út 34-40, 1149, Budapest, Hungary |
| Slovakia | Subaru Italia S. p. A. | 20156 MILANO - Via Montefeltro, 6/A, Italia |
| Czech Republic | SUBARU ČR, s.r.o. | Pekařská 5, 155 00 Praha 5, Czech Republic |
| Slovenia | Subaru Italia S. p. A. | 20156 MILANO - Via Montefeltro, 6/A, Italia |
| Lithuania | Subaru Nordic AB | Starrvägen 15 232 61 ARLÖV, Sweden |
| Latvia | Subaru Nordic AB | Starrvägen 15 232 61 ARLÖV, Sweden |

D00675

| | | |
|---|---|---|
| Poland | Subaru Import Polska sp. z o.o. | ul. Josepha Conrada 51, 31-357 Kraków, Poland |
| Iceland | BL ehf. | Sævarhöfða 2 – 110 Reykjavik, Iceland |
| Norway | Subaru Norge AS | Masteveien 4 \| N-1481 HAGAN \| Norway |
| Bulgaria | Subaru Italia S. p. A. | 20156 MILANO - Via Montefeltro, 6/A, Italia |
| Montenegro | NC.Kattamis(Serbia Montenegro)Ltd., | 59 Ayiou Nicplaou Str, Engomi, Nicosia, Republic of Cyprus |
| Croatia | Subaru Italia S. p. A. | 20156 MILANO - Via Montefeltro, 6/A, Italia |

D00676

– CONTINUED –

| | | |
|---|---|---|
| Serbia | NC.Kattamis(Serbia Montenegro)Ltd., | 59 Ayiou Nicplaou Str, Engomi, Nicosia, Republic of Cyprus |
| Turkey | Baytur Motorlu Vasıtalar Ticaret A.Ş | Boyalı Köşk sok No:4/1 Bebek-BEŞİKTAŞ / İST |
| Switzerland | SUBARU Schweiz AG | Emil-Frey-Strasse, CH-5745 Safenwil, Schweiz |
| Tahiti | Royal Automobiles | Avenue George Clemenceau BP20349 Papeete, Tahiti 98713, French Polynesia |
| New Caledonia | Almameto | BP31280 98895 Noumea Cedex Nouvelle Caledonie |
| Ukraine | Subaru Ukraine LLC | Esplanadna street 20 KYIV Ukraine 01601 |

D00875

# Technical information

## ■ Singapore models

### ▼ Access key fob

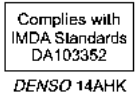


D00574

▼ **Remote keyless entry transmitter**

Complies with
IMDA Standards
DA103352

*ALPS TB1G077*

D00572

▼ **Push-button ignition switch**

Complies with
IMDA Standards
DA103352

*SUBARU* SSPIMB02

D00529

▼ **Tire pressure monitoring system**

Complies with
IMDA Standards
DA105282

D00578

▼ **Subaru Rear Vehicle Detection (SRVD)**

Complies with
IMDA Standards
DA103352

D00580

## ■ Panama models

**⚠ CAUTION**

**FCC WARNING**

**Changes or modifications not expressly approved by the party responsible for compliance could void the user's authority to operate the equipment.**

## NOTE

**This device complies with part 15 of the FCC Rules. Operation is subject to the following two conditions: (1) This device may not cause harmful interference, and (2) this device must accept any interference received, including interference that may cause undesired operation.**

▼ **Access key fob**

FCC ID: HYQ14AHK

▼ **Keyless access with push-button start system**

FCC ID: Y8PFJ16-1

▼ **Immobilizer for models without "keyless access with push-button start system"**

FCC ID: Y8PFJ16-2

– CONTINUED –

## ■ Dominican Republic models

**⚠ CAUTION**

**FCC WARNING**

**Changes or modifications not expressly approved by the party responsible for compliance could void the user's authority to operate the equipment.**

### NOTE

**This device complies with part 15 of the FCC Rules. Operation is subject to the following two conditions: (1) This device may not cause harmful interference, and (2) this device must accept any interference received, including interference that may cause undesired operation.**

▼ **Access key fob**

FCC ID: HYQ14AHK

▼ **Keyless access with push-button start system**

FCC ID: Y8PFJ16-1

▼ **Immobilizer for models with "keyless access with push-button start system"**

FCC ID: Y8PSSPIMB02

▼ **Immobilizer for models without "keyless access with push-button start system"**

FCC ID: Y8PFJ16-2

## ■ Indonesia models

▼ **Subaru Rear Vehicle Detection (SRVD)**

37739/I/SDPPI/2017
2130

D00807

## ■ Serbia models

▼ **Tire pressure monitoring system**

D00499

▼ **Access key fob**

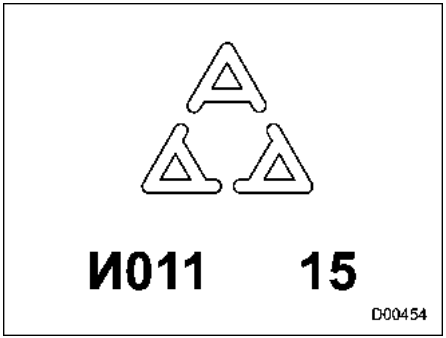

▼ **Remote keyless entry system**

▽ **Transmitter**

Model: TB1G077

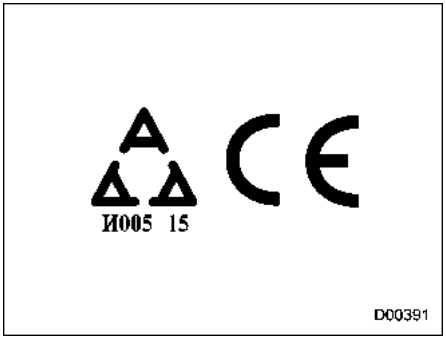


▽ **Receiver**

Model: TD1G049

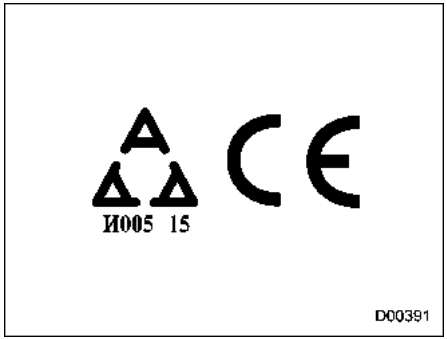


▼ **Subaru Rear Vehicle Detection (SRVD)**

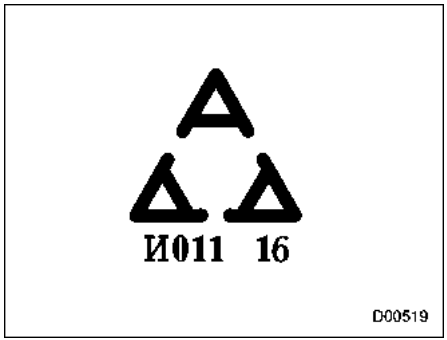


– CONTINUED –

## ■ Vietnam models

### ▼ Tire pressure monitoring system

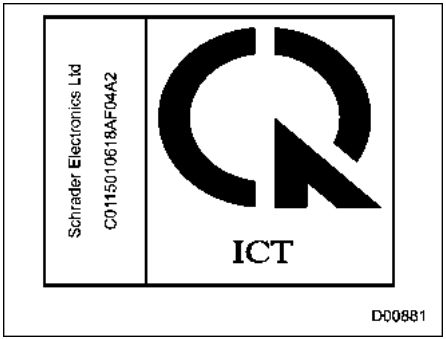


### ▼ Subaru Rear Vehicle Detection (SRVD)

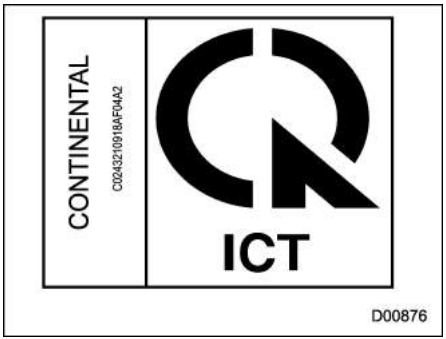


### ▼ Remote keyless entry transmitter

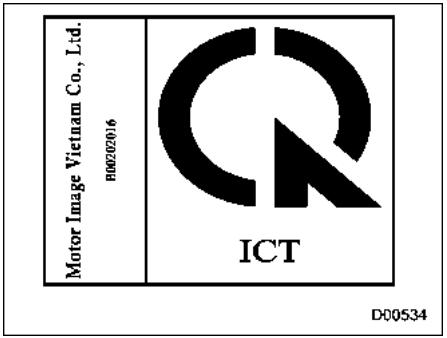


### ▼ Access key fob

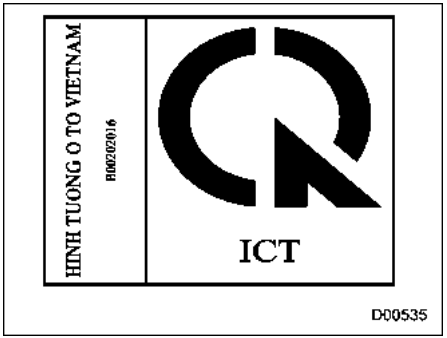


### ▼ Keyless access with push-button start system

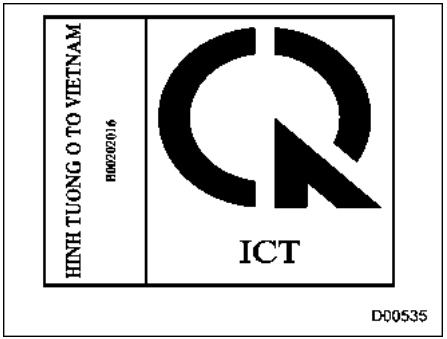


### ▼ Immobilizer for models with “keyless access with push-button start system”

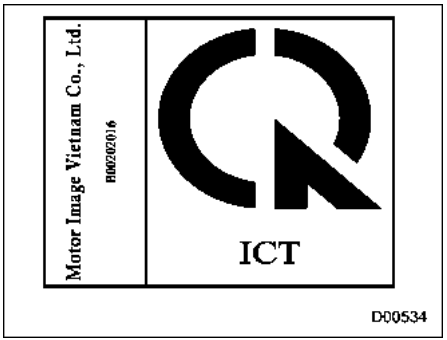

▼ **Immobilizer for models without "keyless access with push-button start system"**

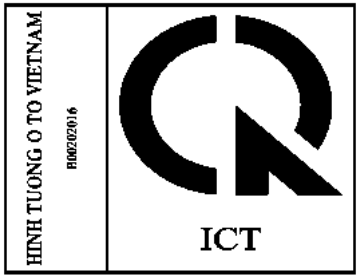


D00535

## ■ Philippine models

▼ **Subaru Rear Vehicle Detection (SRVD)**

D00730

## ■ Taiwan models

▼ **Tire pressure monitoring system**

第十二條
經型式認證合格之低功率射頻電機，非經許可，公司、商號或使用者均不得擅自變更頻率、加大功率或變更原設計之特性及功能。

第十四條
低功率射頻電機之使用不得影響飛航安全及干擾合法通信；經發現有干擾現象時，應立即停用，並改善至無干擾時方得繼續使用。
前項合法通信，指依電信法規定作業之無線電通信。
低功率射頻電機須忍受合法通信或工業、科學及醫療用電波輻射性電機設備之干擾。

500631

– CONTINUED –

### ▼ Access key fob

第十二條
經型式認證合格之低功率射頻電機，非經許可，公司、商號或使用者均不得擅自變更頻率、加大功率或變更原設計之特性及功能。

第十四條
低功率射頻電機之使用不得影響飛航安全及干擾合法通信；經發現有干擾現象時，應立即停用，並改善至無干擾時方得繼續使用。
前項合法通信，指依電信法規定作業之無線電通信。
低功率射頻電機須忍受合法通信或工業、科學及醫療用電波輻射性電機設備之干擾。

500631

### ▼ Keyless access with push-button start system

第十二條
經型式認證合格之低功率射頻電機，非經許可，公司、商號或使用者均不得擅自變更頻率、加大功率或變更原設計之特性及功能。

第十四條
低功率射頻電機之使用不得影響飛航安全及干擾合法通信；經發現有干擾現象時，應立即停用，並改善至無干擾時方得繼續使用。
前項合法通信，指依電信法規定作業之無線電通信。
低功率射頻電機須忍受合法通信或工業、科學及醫療用電波輻射性電機設備之干擾。

500631

### ▼ Immobilizer for models with “keyless access with push-button start system”

第十二條
經型式認證合格之低功率射頻電機，非經許可，公司、商號或使用者均不得擅自變更頻率、加大功率或變更原設計之特性及功能。

第十四條
低功率射頻電機之使用不得影響飛航安全及干擾合法通信；經發現有干擾現象時，應立即停用，並改善至無干擾時方得繼續使用。
前項合法通信，指依電信法規定作業之無線電通信。
低功率射頻電機須忍受合法通信或工業、科學及醫療用電波輻射性電機設備之干擾。

500631

### ▼ Immobilizer for models without "keyless access with push-button start system"

第十二條
經型式認證合格之低功率射頻電機，非經許可，公司、商號或使用者均不得擅自變更頻率、加大功率或變更原設計之特性及功能。

第十四條
低功率射頻電機之使用不得影響飛航安全及干擾合法通信；經發現有干擾現象時，應立即停用，並改善至無干擾時方得繼續使用。
前項合法通信，指依電信法規定作業之無線電通信。
低功率射頻電機須忍受合法通信或工業、科學及醫療用電波輻射性電機設備之干擾。

500631

### ▼ Remote keyless entry system

第十二條
經型式認證合格之低功率射頻電機，非經許可，公司、商號或使用者均不得擅自變更頻率、加大功率或變更原設計之特性及功能。

第十四條
低功率射頻電機之使用不得影響飛航安全及干擾合法通信；經發現有干擾現象時，應立即停用，並改善至無干擾時方得繼續使用。
前項合法通信，指依電信法規定作業之無線電通信。
低功率射頻電機須忍受合法通信或工業、科學及醫療用電波輻射性電機設備之干擾。

500631

### ▼ Subaru Rear Vehicle Detection (SRVD)

電信法第48條，低功率電波輻射性電機管理辦法

第十二條
經型式認證合格之低功率射頻電機，非經許可，公司、商號或使用者均不得擅自變更頻率、加大功率或變更原設計之特性及功能。

第十四條
低功率射頻電機之使用不得影響飛航安全及干擾合法通信；經發現有干擾現象時，應立即停用，並改善至無干擾時方得繼續使用。
前項合法通信，指依電信法規定作業之無線電通信。
低功率射頻電機須忍受合法通信或工業、科學及醫療用電波輻射性電機設備之干擾。

D00563

– CONTINUED –

## ■ Jordan models

### ▼ Access key fob

TRC/LPD/2015/246

D00456

### ▼ Remote keyless entry system

TRC approved the Keyless Transmitter and Receiver.

ALPS ELECTRIC Co., LTD.
MODEL: TB1G077
TRC/LPD/2015/296

ALPS ELECTRIC Co., LTD.
MODEL: TD1G049
TRC/LPD/2015/297

D00459

### ▼ Tire pressure monitoring system

TRC/LPD/2016/327

D00507

### ▼ Subaru Rear Vehicle Detection (SRVD)

TRC's type approval certificate number:
TRC/LPD/2014/254

D00732

## ■ Argentina models

### ▼ Access key

DENSO
14AHK

CNC COMISIÓN NACIONAL DE COMUNICACIONES

ID: H-15252

D00457

### ▼ Remote keyless entry transmitter

ALPS ELECTRIC CO., LTD.
MODEL. TB1G077
Country of origin: Japan, Mexico

CNC COMISIÓN NACIONAL DE COMUNICACIONES

H-15369

D00458

## ■ Jamaica models

### ▼ Access key fob

This product has been Type Approved by Jamaica: SMA-14AHK.

### ▼ Keyless access with push-button start system

This product has been Type Approved by Jamaica: SMA-FJ16-1.

### ▼ Immobilizer for models with “keyless access with push-button start system”

This product has been Type Approved by Jamaica: SMA, Equipment identifier is placed on the product.

### ▼ Immobilizer for models without “keyless access with push-button start system”

This product has been Type Approved by Jamaica: SMA-FJ16-2.

### ▼ Remote keyless entry system

This product has been Type Approved by Jamaica: SMA-“TB1G077”.

This product has been Type Approved by Jamaica: SMA-“TD1G049”.

## ■ Commonwealth of Dominica models

### ▼ Access key fob

Transmitter: Model: 14AHK

Operation frequency: 433.92MHz

Maximum output power(ERP): 0.03 mW

Manufacturer: DENSO CORPORATION

Address: 1-1, Showa-cho, Kariya-shi, Aichi-ken, 448-8661 Japan

### NOTE

– **Dispose of used batteries according to the local laws.**

– **Replace only with the same or equivalent type recommended by the manufacturer.**

Hereby, DENSO CORPORATION declares that the radio equipment type 14AHK is in compliance with Directive 2014/53/EU.

The full text of the EU declaration of conformity is available at the following internet address:

https://www.denso.co.jp/en/contactus/form/doc/index.html

– Replace only with the same or equivalent type recommended by the manufacturer.

– Dispose of used batteries according to the local laws.

### ▼ Keyless access with push-button start system

**⚠ CAUTION**

**FCC WARNING**

**Changes or modifications not expressly approved by the party responsible for compliance could void the user’s authority to operate the equipment.**

### NOTE

**This device complies with part 15 of the FCC Rules. Operation is subject to the following two conditions: (1) This device may not cause harmful interference, and (2) this device must accept any interference received, including interference that may cause undesired operation.**

FCC ID: Y8PFJ16-1

– CONTINUED –

### ▼ Immobilizer for models without "keyless access with push-button start system"

**⚠ CAUTION**

**FCC WARNING**

**Changes or modifications not expressly approved by the party responsible for compliance could void the user's authority to operate the equipment.**

## NOTE

**This device complies with part 15 of the FCC Rules. Operation is subject to the following two conditions: (1) This device may not cause harmful interference, and (2) this device must accept any interference received, including interference that may cause undesired operation.**

FCC ID: Y8PFJ16-2

## ■ Brazil models

### ▼ Access key fob

Este equipamento está homologado pela ANATEL de acordo com os procedimentos regulamentados pela Resolução 242/2000 e atende aos requisitos técnicos aplicados.

Este equipamento opera em caráter secundário, isto é, não tem direito a proteção contra interferência prejudicial, mesmo de estações do mesmo tipo, e não pode causar interferência a sistemas operando em caráter primário.

D00282

ANATEL
2574-15-1732

D00797

### ▼ Keyless access with push-button start system

Este equipamento está homologado pela ANATEL de acordo com os procedimentos regulamentados pela Resolução 242/2000 e atende aos requisitos técnicos aplicados.

Este equipamento opera em caráter secundário, isto é, não tem direito a proteção contra interferência prejudicial, mesmo de estações do mesmo tipo, e não pode causar interferência a sistemas operando em caráter primário.

D00282

### ▼ Immobilizer for models with "keyless access with push-button start system"

Este equipamento está homologado pela ANATEL de acordo com os procedimentos regulamentados pela Resolução 242/2000 e atende aos requisitos técnicos aplicados.

Este equipamento não tem direito à proteção contra interferência prejudicial e não pode causar interferência em sistemas devidamente autorizados.

D00798

D00463

▼ **Immobilizer for models without "keyless access with push-button start system"**

Este equipamento está homologado pela ANATEL de acordo com os procedimentos regulamentados pela Resolução 242/2000 e atende aos requisitos técnicos aplicados.

Este equipamento opera em caráter secundário, isto é, não tem direito a proteção contra interferência prejudicial, mesmo de estações do mesmo tipo, e não pode causar interferência a sistemas operando em caráter primário.

D00282

▼ **Remote keyless entry transmitter**

Este equipamento opera em caráter secundário, isto é, não tem direito a proteção contra interferência prejudicial, mesmo tipo, e não pode causar interferência a sistemas operando em caráter primário.

D00799

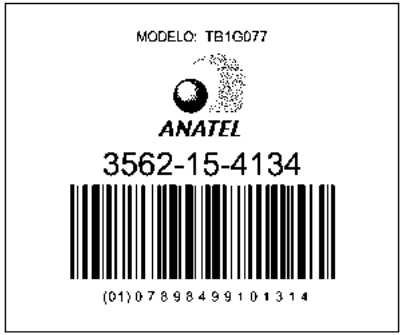


D00462

– CONTINUED –

### ▼ Subaru Rear Vehicle Detection (SRVD)

Este produto está homologado pela ANATEL de acordo com os procedimentos regulamentados pela Resolução 242/2000, e atende aos requisitos técnicos aplicados.

Para maiores informações, consulte o site da ANATEL www.anatel.gov.br

ANATEL
03140-16-06068

"Este equipamento opera em car áter secundário, isto é, não tem direito à proteção contra interferência prejudicial, mesmo de estações do mesmo tipo, e não pode causar interferência a sistemas operand em caráter primário."

D00829

### ▼ Tire pressure monitoring system

ANATEL
02769-16-08001

"Este equipamento opera em caráter secundário, isto é, não tem direito a proteção contra interferência prejudicial, mesmo de estações do mesmo tipo, e não pode causar interferência a sistemas operando em caráter primário."

D00858

## ■ Republic of South Africa models

### ▼ Access key fob

ICASA TA - 2015/661 Approved

D00464

▼ **Remote keyless entry system**

▽ **Transmitter**

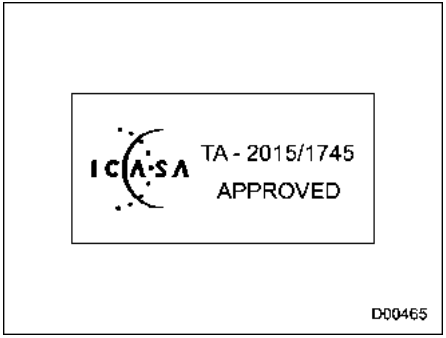


▽ **Receiver**

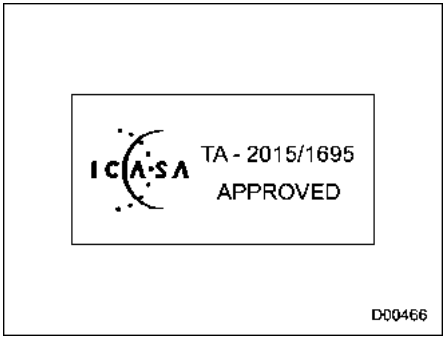


▼ **Subaru Rear Vehicle Detection (SRVD)**

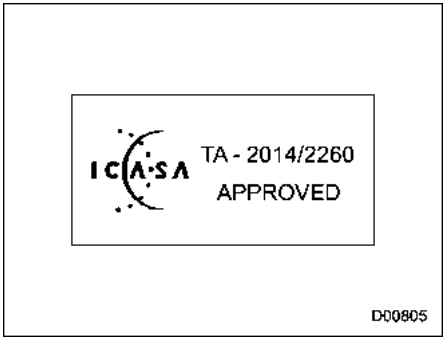


## ■ Russia/Kazakhstan models

▼ **Remote keyless entry system**

– CONTINUED –

▼ **Tire pressure monitoring system**

EAC

D00287

## ■ Paraguay models

▼ **Remote keyless entry transmitter**

CONATEL

NR:2015-09-I-0000269

D00800

Approved Number: 2015-09-I-0000269
Manufacturer: ALPS ELECTRIC CO., LTD.
SUBARU
TB1G077
Vendor: Tokyo Motors S.A.
Address: Av. Eusebio Ayala No. 4649 Km. 5 1/2 Asuncion, Paraguay
+595 21 510981
hlovera@tokyomotors.com.py

▼ **Access key fob**

Vendor: Tokyo Motors S.A.
Address: Av. Eusebio Ayala No. 4649 Km. 5 1/2 Asuncion, Paraguay

▼ **Keyless access with push-button start system**

Vendor: Tokyo Motors S.A.
Address: Av. Eusebio Ayala No. 4649 Km. 5 1/2 Asuncion, Paraguay

▼ **Immobilizer for models without “keyless access with push-button start system”**

Vendor: Tokyo Motors S.A.
Address: Av. Eusebio Ayala No. 4649 Km. 5 1/2 Asuncion, Paraguay

## ■ Bahamas models

▼ **Remote keyless entry system**

ALPS ELECTRIC CO., LTD.
MODEL: TB1G077
FCC ID: CWTB1G077

## ■ Bahrain models

### ▼ Remote keyless entry system

▽ **Transmitter**

ALPS ELECTRIC CO., LTD.
Model: TB1G077

▽ **Receiver**

ALPS ELECTRIC CO., LTD.
Model: TD1G049

### ▼ Tire pressure monitoring system

SCHRADER ELECTRONICS
MODEL: SHR3

### ▼ Subaru Rear Vehicle Detection (SRVD)

The Equipment Identified hereon is approved for use under the following rules.

1. This equipment must not cause harmful interference to other service.
2. This equipment is subject to harmful interference, and the owner of this equipment must not claim for protection.

## ■ British Virgin Islands/Bolivia/ Saint Martin models

### ▼ Remote keyless entry system

**⚠ CAUTION**

**FCC WARNING**

**Changes or modifications not expressly approved by the party responsible for compliance could void the user's authority to operate the equipment.**

**NOTE**

**This device complies with part 15 of the FCC Rules. Operation is subject to the following two conditions: (1) This device may not cause harmful interference, and (2) this device must accept any interference received, including interference that may cause undesired operation.**

## ■ Bermuda models

### ▼ Remote keyless entry system

**⚠ CAUTION**

**FCC WARNING**

**Changes or modifications not expressly approved by the party responsible for compliance could void the user's authority to operate the equipment.**

**NOTE**

**This device complies with part 15 of the FCC Rules. Operation is subject to the following two conditions: (1) This device may not cause harmful interference, and (2) this device must accept any interference received, including interference that may cause undesired operation.**

### ▼ Subaru Rear Vehicle Detection (SRVD)

FCC ID: OAYSRR3A

**⚠ CAUTION**

**FCC WARNING**

**Changes or modifications not expressly approved by the party re-**

– CONTINUED –

**sponsible for compliance could void the user's authority to operate the equipment.**

## NOTE

**This device complies with part 15 of the FCC Rules. Operation is subject to the following two conditions: (1) This device may not cause harmful interference, and (2) this device must accept any interference received, including interference that may cause undesired operation.**

## ■ El Salvador/Grenada models

### ▼ Subaru Rear Vehicle Detection (SRVD)

FCC ID: OAYSRR3A

**⚠ CAUTION**

**FCC WARNING**

**Changes or modifications not expressly approved by the party responsible for compliance could void the user's authority to operate the equipment.**

## NOTE

**This device complies with part 15 of the FCC Rules. Operation is subject to the following two conditions: (1) This device may not cause harmful interference, and (2) this device must accept any interference received, including interference that may cause undesired operation.**

## ■ Australia/New Zealand models

### ▼ Subaru Rear Vehicle Detection (SRVD)

D00804

## ■ Israel models

### ▼ Tire pressure monitoring system

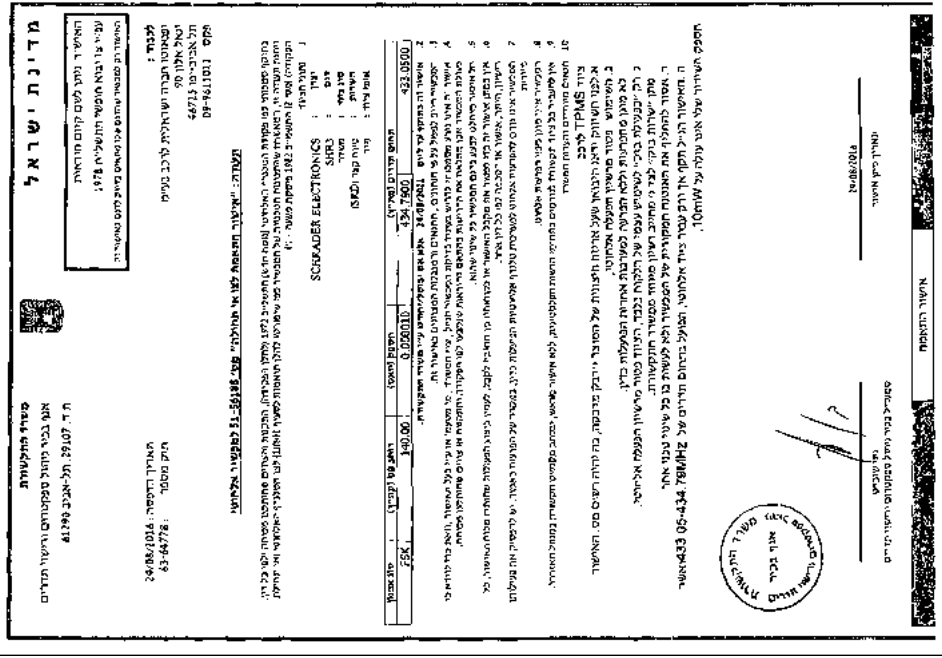

D00522

– CONTINUED –

## ▼ Remote keyless entry system

א. השימוש במכשיר הינו על בסיס "משני" ופטור מרשיון הפעלה אלחוטי.
כלומר – לא מוגן מהפרעות וללא הפרעה למערכות אחרות הפועלות כדין.
ב. רק "בפעולת בזק" לשימוש עצמי של הלקוח בלבד, הציוד פטור מרשיון הפעלה אלחוטי.
מתן "שרות בזק" לצד ג' מחייב רשיון מיוחד ממשרד התקשורת.
ג. אסור להחליף את האנטנה המקורית של המכשיר, ולא לעשות בו כל שינוי טכני אחר.

• Transmitter

ALPS ELECTRIC CO., LTD.
MODEL: TB1G077
JAPAN, MEXICO

• Receiver

ALPS ELECTRIC CO., LTD.
MODEL: TD1G049
JAPAN, MEXICO

D00469

## ▼ Access key fob

| | |
|---|---|
| סימן רשום | DENSO: |
| שנת ייצור | :ראה מוצר |
| מוצר : מפתח אלאקטרוני | |
| דגם | 14AHK : |
| ארץ ייצור | : יפן |

D00867

## ▼ Keyless access with push-button start system

| | |
|---|---|
| מוצר | : שלט רחוק כולל לחצן הפעלה למערכת |
| סימן רשום | SUBARU : |
| ארץ ייצור | : ראה מוצר |
| דגם | FJ16-1 : |
| שנת ייצור | : ראה מוצר |

D00888

## ■ Ukraine models

### ▼ Tire pressure monitoring system

109

D00470

### ▼ Subaru Rear Vehicle Detection (SRVD)

D00870

справжнім (найменування виробника ADC Automotive Distance Control Systems GmbH ) заявляє, що тип радіообладнання (позначення типу радіообладнання SRR3-A) відповідає Технічному регламенту радіообладнання;

повний текст декларації про відповідність доступний на веб-сайті за такою адресою:
http://continental.automotive-approvals.com/

D00909

SRR3-A has been registered with: UA RF: 1CONT 0006

### ▼ Immobilizer for models without “keyless access with push-button start system”

#### ▽ Models without immobilizer ECU

передавач: модель: FJ16-2
смугу радіочастот: 134.2 кГц
максимальну потужність випромінювання (ERP): 0.000169 мВт

виробник: SUBARU CORPORATION
адреса: 1-1, Subaru-cho, Ota-shi, Gunma-ken, 373-8555, Japan

D00896

справжнім SUBARU CORPORATION заявляє, що тип радіообладнання відповідає Технічному регламенту радіообладнання;
повний текст декларації про відповідність доступний на веб-сайті за такою адресою:
https://www.denso.com/global/en/contact-us/doc/

D00898

– CONTINUED –

## ■ Suriname models

### ▼ Remote keyless entry system

#### ▽ Remote keyless entry transmitter

ALPS ELECTRIC CO., LTD.
SUBARU
Transmitter: TB1G077
FCC ID: CWTB1G077/

CE

#### ▽ Receiver

ALPS ELECTRIC CO., LTD.
SUBARU
Receiver: TD1G049
FCC ID: CWTD1G049/

CE

## ■ Venezuela models

### ▼ Remote keyless entry system

ALPS ELECTRIC CO., LTD.
SUBARU
Transmitter: TB1G077
FCC ID: CWTB1G077/

CE

## ■ Oman models

### ▼ Remote keyless entry system

#### ▽ Remote keyless entry transmitter

OMAN-TRA
TRA/TA-R/2851/15
D080134

D00471

#### ▽ Receiver

OMAN-TRA
TRA/TA-R/2853/15
D080134

D00472

### ▼ Tire pressure monitoring system

OMAN TRA
TA-R/3416/16
D080134

D00523

## ■ UAE models

### ▼ Remote keyless entry system

▽ Remote keyless entry transmitter

TRA
REGISTERED No :
ER41647/15

DEALER No :
0034163/10

D00473

▽ Receiver

TRA
REGISTERED No :
ER42093/15

DEALER No :
0034163/10

D00474

### ▼ Tire pressure monitoring system

TRA
REGISTERED No:
ER47291/16

DEALER No:
DA0047074/10

D00503

### ▼ Subaru Rear Vehicle Detection (SRVD)

TRA
REGISTERED No:
ER59360

DEALER No:
DA40068

D00806

## ■ Nigeria models

### ▼ Access key fob

Model: 14AHK

Connection and use of this communications equipment is permitted by the Nigerian Communications Commission.

### ▼ Keyless access with push-button start system

Model: FJ16-1

Connection and use of this communications equipment is permitted by the Nigerian Communications Commission.

### ▼ Remote keyless entry system

▽ Remote keyless entry transmitter

MODEL: TB1G077

Connection and use of this communications equipment is permitted by the Nigerian Communications Commission

D00475

– CONTINUED –

▽ **Receiver**

**MODEL: TD1G049**

Connection and use of this communications equipment is permitted by the Nigerian Communications Commission

D00476

▼ **Immobilizer for models without "keyless access with push-button start system"**

Model: FJ16-2

Connection and use of this communications equipment is permitted by the Nigerian Communications Commission.

▼ **Subaru Rear Vehicle Detection (SRVD)**

Connection and use of this communications equipment is permitted by the Nigerian Communications Commission.

## ■ Morocco models

▼ **Access key fob**

MOROCCO: MR10573/2015
DENSO 14AHK

▼ **Remote keyless entry system**

▽ **Transmitter**

*AGREE PAR L'ANRT MAROC*

Numéro d'agrément : MR 10771 ANRT 2015
Date d'agrément : 2015/9/2

D00467

▽ **Receiver**

*AGREE PAR L'ANRT MAROC*

Numéro d'agrément : MR 10772 ANRT 2015
Date d'agrément : 2015/9/2

D00468

▼ **Tire pressure monitoring system**

*AGREE PAR L'ANRT MAROC*

Numéro d'agrément : MR 12227 ANRT 2016
Date d'agrément : 2016-07-11

D00506

**A**
Abbreviation ..... 3
ABS (Anti-lock Brake System) ..... 7-22
Warning light ..... 3-22
Access key fob ..... 2-3
Warning light ..... 3-28
Accessories ..... 11-41
Accessory power outlet ..... 6-7
Additional information for Europe ..... 8-20
Air cleaner element ..... 11-19
Air conditioner
Automatic climate control ..... 4-6
Manual climate control ..... 4-8
Air filtration system ..... 4-13
Air flow mode ..... 4-8
All-Wheel Drive warning light ..... 3-27
Alloy wheel ..... 11-32
Cleaning ..... 10-4
Antenna
Roof antenna ..... 5-2
Anti-lock Brake System (ABS) ..... 7-22
Ashtray ..... 6-11
AT OIL TEMP warning light ..... 3-20
Audio set ..... 5-2
Auto on/off headlights ..... 3-70
Sensor ..... 3-72
Auto Start Stop system ..... 7-47
Indicator light ..... 3-36
OFF indicator light ..... 3-35
Warning light ..... 3-35
Auto Vehicle Hold function ..... 7-33
ON indicator light ..... 3-26
Operation indicator light ..... 3-26
Auto-dimming mirror ..... 3-91
Automatic headlight beam leveler ..... 3-78
Warning light ..... 3-27
Automatic Locking Retractor/Emergency Locking Retractor (ALR/ELR) ..... 1-14
Automatic rain sensing windshield wipers ..... 3-86
Sensor ..... 3-86
Sensor sensitivity control ..... 3-87

**B**
Battery
Disposal and recycling ..... 9
Drainage prevention function ..... 2-20
Jump starting ..... 9-18
Replacement (access key fob) ..... 11-53
Replacement (remote keyless entry system) ..... 11-54
Replacement (transmitter) ..... 11-54
Vehicle battery ..... 11-38
Booster seat ..... 1-42
Brake
Assist ..... 7-20
Booster ..... 7-20, 11-23
Disc ..... 12-9
Fluid ..... 11-22, 12-8
Pad ..... 11-25
Parking ..... 7-31
Pedal ..... 11-23
System ..... 7-20

Brake pedal
Free play ..... 11-23
Reserve distance ..... 11-24
Brake system ..... 7-20
Warning light ..... 3-24
Braking ..... 7-19
Tips ..... 7-19
Breaking-in of new brake pads ..... 11-25
Bulb
Chart ..... 12-14
Replacing ..... 11-41

**C**

Cargo area
Cover ..... 6-13
Light ..... 6-3, 11-51
Tie-down hooks ..... 6-15
Catalytic converter ..... 8-3
Center console ..... 6-5
Changing
Coolant ..... 11-19
Flat tire ..... 9-5
Oil and oil filter ..... 11-15
Charge warning light ..... 3-19
Checking
Brake pedal free play ..... 11-23
Brake pedal reserve distance ..... 11-24
Coolant level ..... 11-17
Fluid level (brake fluid) ..... 11-22
Fluid level (washer fluid) ..... 11-32
Oil level (engine oil) ..... 11-14
Child restraint systems ..... 1-25
Installation of a booster seat ..... 1-42
Installation with ISOFIX anchor bars ..... 1-44
Installation with seatbelt ..... 1-37
Top tether anchorages ..... 1-47
Child safety ..... 4
Locks ..... 2-24
Chime
Key reminder ..... 3-5
Seatbelt ..... 3-14
Cigarette lighter ..... 6-8
Cleaning
Alloy wheels ..... 10-4
Interior ..... 10-5
Ventilation grille ..... 4-11
Climate control system
Automatic ..... 4-6
Manual ..... 4-8
Clock ..... 3-49, 3-58, 3-66
Coat hook ..... 6-12
Combination meter display (color LCD) ..... 3-37
Console ..... 6-5
Continuously variable transmission
Fluid ..... 11-21, 12-8
Oil temperature warning light (AT OIL TEMP) ..... 3-20
Coolant ..... 11-17, 12-8
Temperature high warning light ..... 3-18
Temperature low indicator light ..... 3-18
Cooling system ..... 11-16
Corrosion protection ..... 10-4
Cruise control ..... 7-43

Indicator light ..... 3-34
Set indicator light ..... 3-35

**D**

Daytime running light system ..... 3-76
Declaration of conformity in accordance with the Machinery Directive 2006/42/EC ..... 13-14
Declaration of conformity in accordance with the radio and telecommunications terminal equipment directive 1999/5/EC ..... 13-5
Declaration of conformity in accordance with the Radio Equipment Directive 2014/53/EU ..... 13-15
Defogger ..... 3-93
Defrosting ..... 4-11
Deicer ..... 3-93
Differential gear oil
Front ..... 11-22, 12-6
Rear ..... 11-22, 12-6
Dimensions ..... 12-2
Disc brake pad wear warning indicators ..... 7-21
Dome light ..... 6-2, 11-51
Door
Locks ..... 2-18
Open warning light ..... 3-26
Double locking system ..... 2-21
Double trip meter ..... 3-10
Drive belts ..... 11-21
Driving
All-Wheel Drive model ..... 8-6
Car phone/cell phone ..... 7
Drinking ..... 6
Drugs ..... 7
Foreign countries ..... 8-4
Off road ..... 8-7
Pets ..... 8
Snowy and icy roads ..... 8-10
Tips ..... 7-18, 8-2, 8-6
Tired or sleepy ..... 7
Winter ..... 8-9

**E**

ECO gauge ..... 3-11
Electrical system ..... 12-9
Electronic Brake Force Distribution (EBD) system ..... 7-23
Warning ..... 3-24
Electronic parking brake ..... 7-31
Automatic release function by accelerator pedal ..... 7-33
Indicator light ..... 3-25
Warning ..... 3-25, 7-37
Emergency Locking Retractor (ELR) ..... 1-14
Emergency stop signal ..... 7-21
Engine
Compartment overview ..... 11-13
Coolant ..... 11-17, 12-8
Exhaust gas (carbon monoxide) ..... 6, 8-2
Hood ..... 11-11
Low oil level warning light ..... 3-19
Oil ..... 11-14, 12-4
Overheating ..... 9-22
Starting & stopping ..... 7-7, 7-9
Exterior care ..... 10-2

**F**
Flat tire repair kit ..... 9-11
Technical data ..... 9-17
Flat tires ..... 9-5
Floor mat ..... 6-11
Fluid level
Brake ..... 11-22
Continuously variable transmission ..... 11-21
Folding mirror switch ..... 3-92
Front
Differential gear oil ..... 11-22, 12-6
Fog light (bulb) ..... 11-45
Seatbelt pretensioners ..... 1-21
Turn signal light ..... 11-44
Front fog light ..... 3-81
Bulb ..... 11-45, 12-14
Indicator light ..... 3-35
Switch ..... 3-81
Fuel ..... 7-3
Consumption indicator ..... 3-40, 3-44, 3-58
Economy hints ..... 8-2
Filler lid and cap ..... 7-4
Gauge ..... 3-10
Requirements ..... 7-3, 12-3
Fuses ..... 11-39
Fuses and circuits ..... 12-10

**G**
Gear shift indicator ..... 9, 3-34, 7-16
Glove box ..... 6-5

**H**
Hazard warning flasher ..... 3-8, 9-2
Headlight ..... 3-70
Beam leveler ..... 3-78
Bulb wattage ..... 12-14
Control switch ..... 3-69
Flasher ..... 3-73
Indicator light ..... 3-35
Off delay setting ..... 3-71
Washer ..... 3-90
High Beam Assist ..... 3-73
High Beam Assist function ..... 3-73
Indicator light ..... 3-34
Warning indicator ..... 3-34
High beam indicator light ..... 3-34
High/low beam change (dimmer) ..... 3-72
Hill descent control ..... 7-27, 7-29
Indicator light ..... 3-36
Hill start assist ..... 7-38, 11-24
Hook
Coat ..... 6-12
Convenient tie-down ..... 6-15
Shopping bag ..... 6-13
Towing and tie-down ..... 9-23
Horn ..... 3-96
Hose and connections ..... 11-17

**I**
Ignition switch ..... 3-4
Light ..... 3-6
Illumination brightness control ..... 3-12

Immobilizer ..... 2-14
Indicator light..... 3-33
Indicator light
Auto Start Stop..... 3-36
Auto Start Stop OFF ..... 3-35
Auto Vehicle Hold ON ..... 3-26
Auto Vehicle Hold operation ..... 3-26
Coolant temperature low..... 3-18
Cruise control..... 3-34
Cruise control set..... 3-35
Electronic parking brake ..... 3-25
Front fog light..... 3-35
Headlight ..... 3-35
High beam ..... 3-34
High Beam Assist ..... 3-34
Hill descent control ..... 3-36
Immobilizer ..... 3-33
Rear fog light ..... 3-35
Rear seatbelt..... 3-15
Security (immobilizer)..... 3-33
SUBARU Rear Vehicle Detection OFF ..... 3-36
Turn signal..... 3-34
Vehicle Dynamics Control OFF..... 3-24
Vehicle Dynamics Control operation..... 3-23
X-MODE..... 3-36
Inside mirror..... 3-90, 3-91
Interior lights ..... 6-2
ISOFIX anchor bars ..... 1-44

**J**

Jack and jack handle ..... 9-4
Jack-up point ..... 9-5
Jump starting..... 9-18

**K**

Key..... 2-2
Number..... 2-2
Reminder chime..... 3-5
Replacement ..... 2-14
Keyless access with push-button start system ..... 2-3
Disabling keyless access functions..... 2-12
Warning chimes and warning light..... 3-28
When access key fob does not operate properly..... 9-27
Keyless entry system..... 2-15

**L**

Lap belt pretensioner..... 1-21
Leather seat materials ..... 10-6
License plate light ..... 11-49
Light
Back-up ..... 11-49
Cargo area ..... 6-3, 11-51
Control switch ..... 3-69
Daytime running..... 3-76, 11-45
Dome..... 6-2, 11-51
Front fog ..... 3-81, 11-45
Front position..... 3-70, 11-44
Ignition switch ..... 3-6
License plate ..... 11-49
Map..... 6-2, 11-51
Rear combination ..... 11-47
Rear fog..... 3-82, 11-50

Tail ..... 11-47
Turn signal ..... 3-83, 11-44, 11-47
Vanity mirror ..... 6-4, 11-51
Loading your vehicle ..... 8-13
Low fuel warning light ..... 3-26
Low tire pressure warning light ..... 3-20

**M**
Maintenance
Precautions ..... 11-7
Schedule ..... 11-3
Seatbelt ..... 1-21
Tips ..... 11-9
Tools ..... 9-3
Malfunction indicator light (Check Engine light) ..... 3-17
Manual
Climate control ..... 4-8
Mode (continuously variable transmission) ..... 7-14
Map light ..... 6-2, 11-51
Meters and gauges ..... 3-9
Mirror defogger ..... 3-93
Mirrors ..... 3-90
Multi-function display (black and white) ..... 3-44
Multi-function display (color LCD) ..... 3-50

**N**
New vehicle break-in driving ..... 8-2

**O**
Odometer ..... 3-9
Off road driving ..... 8-7
Oil filter ..... 11-15
Oil level
Engine ..... 11-14
Front differential gear ..... 11-22
Rear differential gear ..... 11-22
Warning light ..... 3-19
Oil pressure warning light ..... 3-19
Outside
Mirror defogger ..... 3-93
Mirrors ..... 3-91
Temperature indicator ..... 3-49, 3-52
Overheating engine ..... 9-22

**P**
Parking ..... 7-31
Brake ..... 7-31
Tips ..... 7-37
Periodic inspections ..... 8-4
Petrol fuel ..... 7-3
Power
Outlets ..... 6-7
Outside mirrors ..... 3-91
Steering ..... 7-18
Steering warning light ..... 3-27
Windows ..... 2-24
Precautions against vehicle modification ..... 1-25, 1-78
Preparing to drive ..... 7-6
Push-button
Ignition switch ..... 3-6
Starting and stopping engine ..... 7-9

**R**
RAB (Reverse Automatic Braking)
OFF indicator ..... 3-36
ON/OFF setting ..... 7-70
Warning indicator ..... 3-36
Rear
Combination lights ..... 11-47
Differential gear oil ..... 11-22, 12-6
Gate ..... 2-27, 9-29
Turn signal light ..... 11-47
Rear fog light ..... 3-82, 11-50
Indicator light ..... 3-35
Rear window
Defogger ..... 3-93
Wiper and washer switch ..... 3-89
Wiper blades ..... 11-36
Recommended
Brake fluid ..... 12-8
Continuously variable transmission fluid ..... 12-8
Engine oil ..... 12-4
Front differential gear oil ..... 12-6
Rear differential gear oil ..... 12-6
Spark plugs ..... 12-9
Refueling ..... 7-4
Remote keyless entry system ..... 2-15
Replacement
Brake pad and lining ..... 11-24
Wiper blades ..... 11-33
Replacing
Access key fob battery ..... 11-53
Air cleaner element ..... 11-20
Battery of access key fob ..... 11-53
Remote keyless entry transmitter battery ..... 11-54
Replacing bulbs ..... 11-41, 12-14
Back-up light ..... 11-49
Cargo area light ..... 11-51
Daytime running light ..... 11-45
Dome light ..... 11-51
Front fog light ..... 11-45
Front position light ..... 11-44
Front turn signal light ..... 11-44
Halogen headlight ..... 11-42
Headlight ..... 11-41
LED headlight ..... 11-41
License plate light ..... 11-49
Map light ..... 11-51
Rear combination light ..... 11-47
Rear fog light ..... 11-50
Rear turn signal light ..... 11-47
Side turn signal light ..... 11-47
Tail light ..... 11-47
Vanity mirror light ..... 11-51
Reverse Automatic Braking System ..... 7-61
Rocking the vehicle ..... 8-12
Roof molding and load carrier ..... 8-13
Roof rails ..... 8-14

**S**
Safety
Precautions when driving ..... 4
Symbol ..... 2
Warnings ..... 2

Sealing flat tire ..... 9-8
Flat tire repair kit ..... 9-11
How to seal..... 9-13
Safety precautions ..... 9-9
Seat
Fabric..... 10-6
Heater ..... 1-11
Seatbelt ..... 4, 1-12
Fastening..... 1-15
Maintenance ..... 1-21
Pretensioners ..... 1-21
Safety tips..... 1-12
Warning light and chime ..... 3-14
Security
Immobilizer ..... 2-14
Indicator light (immobilizer) ..... 3-33
Select lever
Position indicator ..... 3-33
Shift lock function ..... 7-17
Shopping bag hook ..... 6-13
Snow tires..... 8-11, 11-25
Snowy and icy roads..... 8-10
Spark plugs..... 11-21, 12-9
Specifications ..... 12-2
Speedometer..... 3-9
SRS
Frontal airbag ..... 1-60
SRS airbag (Supplemental Restraint System airbag)..... 4, 1-49
SRS airbag system
Monitors ..... 1-76
Servicing ..... 1-77
Warning light ..... 3-16
Starting & stopping engine ..... 7-7, 7-9
Steering Responsive Headlight ..... 3-77
Steering wheel
Heated Steering Wheel system ..... 3-95
Power ..... 7-18
Tilt/telescopic ..... 3-95
Storage compartment ..... 6-4
SUBARU Rear Vehicle Detection (SRVD) ..... 7-53
OFF indicator..... 3-36, 7-59
OFF switch ..... 7-60
SRVD approach indicator light/warning buzzer..... 7-57
Warning indicator ..... 3-36, 7-59
Sun shade..... 2-30
Sun visors ..... 6-3
Sunroof ..... 2-29, 9-30
Supplemental Restraint System airbag (SRS)..... 4, 1-49
Synthetic leather upholstery..... 10-6

**T**

Tachometer ..... 3-9
Temperature warning light
AT OIL TEMP ..... 3-20
Coolant ..... 3-18
Temporary spare tire..... 9-2, 12-9
Tether (child restraint system) ..... 1-47
Tie-down hooks/holes ..... 9-23
Tire..... 11-25, 12-9
Chains ..... 8-12
Inspection..... 11-27

Pressures and wear ..... 11-27
Replacement ..... 11-30
Rotation ..... 11-30
Size and pressure ..... 12-9
Types ..... 11-25
Tire pressure monitoring system (TPMS) .... 7-40, 9-17, 11-25
TPMS mode setting ..... 7-41
Warning light ..... 3-20
Tires and wheels ..... 11-25
Tools ..... 9-3
Top tether anchorages ..... 1-47
Towing ..... 9-23
All wheels on the ground ..... 9-26
Flat-bed truck ..... 9-26
Hooks ..... 9-23
Weight ..... 8-16
Trailer
Hitch ..... 8-16
Towing ..... 8-15
Towing tips ..... 8-18
Trip meter ..... 3-10
Turn signal
Indicator lights ..... 3-34
Lever ..... 3-83

**U**

Under-floor storage compartment ..... 6-16
USB power supply ..... 6-9

**V**

Vanity mirror ..... 6-4, 11-51
Light ..... 11-51
Vehicle
Identification ..... 12-18
Symbols ..... 3
Vehicle Dynamics Control
OFF indicator light ..... 3-24
OFF switch ..... 7-26
Operation indicator light ..... 3-23
System ..... 7-24
Warning light ..... 3-22
Ventilator ..... 4-2

**W**

Warning and indicator lights ..... 3-13
Warning chimes
Keyless access with push-button start system ..... 3-28
Seatbelt ..... 3-14
Warning light
ABS ..... 3-22
Access key ..... 3-28
All-Wheel Drive ..... 3-27
AT OIL TEMP ..... 3-20
Auto Start Stop ..... 3-35
Automatic headlight beam leveler ..... 3-27
Brake system ..... 3-24
Charge ..... 3-19
Coolant temperature high ..... 3-18
Door open ..... 3-26
Electronic parking brake ..... 3-25
Engine low oil level ..... 3-19
High Beam Assist warning ..... 3-34

Icy road surface ..... 3-37
Keyless access with push-button start system ..... 3-28
LED headlight ..... 3-28
Low fuel ..... 3-26
Low tire pressure ..... 3-20
Oil pressure ..... 3-19
Power steering ..... 3-27
RAB ..... 3-36
Seatbelt ..... 3-14
SRS airbag system ..... 3-16
Steering Responsive Headlight ..... 3-28
SUBARU Rear Vehicle Detection ..... 3-36
Vehicle Dynamics Control ..... 3-22
Windshield washer fluid ..... 3-26
Warranties ..... 1
Washing ..... 10-2
Waxing and polishing ..... 10-3
Wear indicators ..... 11-29
Wheel
Alloy ..... 11-32
Balance ..... 11-29
Nut tightening torque ..... 12-9
Replacement ..... 11-31
Windows ..... 2-24
Windshield
Washer fluid ..... 11-32
Wiper and washer switches ..... 3-86
Wiper blades ..... 11-34
Wiper deicer ..... 3-93
Winter
Driving ..... 8-9
Tires ..... 8-11, 11-25
Wiper and washer ..... 3-83
Wiper deicer ..... 3-93

**X**

X-MODE ..... 7-27
Indicator light ..... 3-36

# GAS STATION REFERENCE

## ■ Fuel

### ▼ For Australia

- Fuel type: **Unleaded petrol** only
- Research Octane Number (RON): **91** or higher is recommended. For optimum engine performance and driveability, it is recommended that you use premium grade unleaded petrol.
- Ethanol blended petrol: Ethanol content is up to 10%.

### ▼ For Europe

- Fuel type: **Unleaded petrol** only
- Research Octane Number (RON): **95** or higher is recommended. If unleaded petrol with 95 RON or higher is not available, unleaded petrol with 90 RON or higher may be used.
- Ethanol blended petrol: **E5, E10** or the ethanol content is up to 10%.

### ▼ For Other areas

- Fuel type: **Unleaded petrol** only
- Research Octane Number (RON): **95** or higher is recommended. If unleaded petrol with 95 RON or higher is not available, unleaded petrol with 90 RON or higher may be used.
- Ethanol blended petrol: Ethanol content is up to 10%.

## ■ Fuel tank capacity

63 liters (16.6 US gal, 13.9 Imp gal)

## ■ Engine oil

Use only the following oils.

- API classification SN with the words “RESOURCE CONSERVING”
- or ILSAC GF-5, which can be identified with the ILSAC certification mark (Starburst mark)
- or ACEA specification A3 or A5

For the complete viscosity requirements, refer to “Engine oil” ☞12-4.

## ■ Engine oil capacity

4.4 liters (4.7 US qt, 3.9 Imp qt)

The indicated oil quantity is only a guideline and is estimated based on a case when the engine oil is changed with an oil filter. After refilling the engine with oil, the oil level should be checked using an oil level gauge. For more details about maintenance and service, refer to “Engine oil” ☞11-14.

## ■ Cold tire pressure

See the label located under the driver’s door latch.