Jeep®

2016 Renegade

OWNER'S MANUAL

VEHICLES SOLD IN CANADA

With respect to any Vehicles Sold in Canada, the name FCA US LLC shall be deemed to be deleted and the name FCA Canada Inc. used in substitution therefore.

DRIVING AND ALCOHOL

Drunken driving is one of the most frequent causes of accidents.

Your driving ability can be seriously impaired with blood alcohol levels far below the legal minimum. If you are drinking, don't drive. Ride with a designated non-drinking driver, call a cab, a friend, or use public transportation.

WARNING!
Driving after drinking can lead to an accident. Your perceptions are less sharp, your reflexes are slower, and your judgment is impaired when you have been drinking. Never drink and then drive.

This manual illustrates and describes the operation of features and equipment that are either standard or optional on this vehicle. This manual may also include a description of features and equipment that are no longer available or were not ordered on this vehicle. Please disregard any features and equipment described in this manual that are not on this vehicle.

FCA US LLC reserves the right to make changes in design and specifications, and/or make additions to or improvements to its products without imposing any obligation upon itself to install them on products previously manufactured.

Copyright © 2015 FCA US LLC

TABLE OF CONTENTS

SECTION		PAGE
1	INTRODUCTION	3
2	CUSTOMER ASSISTANCE	9
3	GRAPHICAL TABLE OF CONTENTS	19
4	GETTING TO KNOW YOUR VEHICLE	27
5	GETTING TO KNOW YOUR INSTRUMENT CLUSTER	177
6	SAFETY	237
7	STARTING AND OPERATING	317
8	IN CASE OF EMERGENCY	433
9	MAINTAINING AND CARING FOR YOUR VEHICLE	519
10	TECHNICAL DATA	595
11	MULTIMEDIA	603
12	INDEX	665

INTRODUCTION

CONTENTS

- INTRODUCTION 4
- HOW TO USE THIS MANUAL 5
- WARNINGS AND CAUTIONS 7
- VEHICLE MODIFICATIONS/ALTERATIONS 7
- ROLLOVER WARNING 7

INTRODUCTION

Congratulations on selecting your new FCA US LLC vehicle. Be assured that it represents precision workmanship, distinctive styling, and high quality - all essentials that are traditional to our vehicles.

This is a specialized utility vehicle. It can go places and perform tasks that conventional passenger cars are not intended. It handles and maneuvers differently from many passenger cars both on-road and off-road, so take time to become familiar with your vehicle.

The two-wheel drive version of this vehicle was designed for on-road use only. It is not intended for off-road driving or use in other severe conditions suited for a four-wheel drive vehicle.

Before you start to drive this vehicle, read the Owner's Manual. Be sure you are familiar with all vehicle controls, particularly those used for braking, steering, transmission, and transfer case shifting. Learn how your vehicle handles on different road surfaces. Your driving skills will improve with experience. When driving off-road or working the vehicle, don't overload the vehicle or expect the vehicle to overcome the natural laws of physics. Always observe federal, state, provincial and local laws wherever you drive.

As with other vehicles of this type, failure to operate this vehicle correctly may result in loss of control or a collision. Refer to "Driving Tips/Off-Road Driving Tips" in "Starting And Operating" for further information.

This Owner's Manual has been prepared with the assistance of service and engineering specialists to acquaint you with the operation and maintenance of your vehicle. It is supplemented by Warranty Information, and various customer-oriented documents. Please take the time to read these publications carefully. Following the instructions and recommendations in this manual will help assure safe and enjoyable operation of your vehicle.

NOTE: After reviewing the owner information, it should be stored in the vehicle for convenient referencing and remain with the vehicle when sold.

When it comes to service, remember that your authorized dealer knows your Jeep® vehicle best, has factory-trained technicians and genuine MOPAR® parts, and cares about your satisfaction.

HOW TO USE THIS MANUAL

Consult the Table of Contents to determine which section contains the information you desire.

Since the specification of your vehicle depends on the items of equipment ordered, certain descriptions and illustrations may differ from your vehicle's equipment.

The detailed index at the back of this Owner's Manual contains a complete listing of all subjects.

Consult the following table for a description of the symbols that may be used on your vehicle or throughout this Owner's Manual:

WATER IN FUEL
REAR WINDOW WIPER
WINDSHIELD WIPER INTERMITTENT
EXTERIOR BULB FAILURE
HIGH BEAM
TURN SIGNALS
UPPER AIR OUTLET
HEATED SEAT LOW
DOOR LOCK
ADJUSTABLE PEDALS
ELECTRONIC SPEED CONTROL
ESP BAS
ELECTRONIC STABILITY PROGRAM / BRAKE ASSIST SYSTEM
FUEL
REAR WINDOW INTERMITTENT WIPER
WINDSHIELD WASHER
MASTER LIGHTING SWITCH
LOW BEAM
KEY ACTIVATE (POWER OUTLET)
UPPER AND LOWER AIR OUTLET
HEATED SEAT HIGH
WINDOW LIFT
TIRE PRESSURE MONITOR
HILL DESCENT CONTROL
BRAKE
BRAKE SYSTEM WARNING PARKING BRAKE
FUEL FILL SIDE
REAR WINDOW WASHER
WINDSHIELD WASHER FLUID LEVEL
DOME LIGHT
FRONT FOG LIGHT
HOOD RELEASE
LOWER AIR OUTLET
RECIRCULATION
CONVERTIBLE 4 WINDOW DOWN
ELECTRONIC STABILITY CONTROL
AWD!
ALL WHEEL DRIVE
ABS
FAILURE OF ANTI-LOCK BRAKING SYSTEM
ENGINE OIL
REAR WINDOW DEFROST
WINDSHIELD, ELECTRICALLY HEATED
PARK LIGHTS
REAR FOG LAMP
LIFTGATE RELEASE AND LIFTGATE OPEN
DEFROST AND LOWER AIR OUTLET
VENTILATING FAN
WINDOW LOCK
ELECTRONIC THROTTLE CONTROL
4WD!
FOUR WHEEL DRIVE
BRAKE
BRAKE SYSTEM WARNING PARKING BRAKE
BATTERY CHARGING
HEATED MIRROR
WINDSHIELD DEFROST
INSTRUMENT PANEL ILLUMINATION
SEAT BELT
SLIDING DOOR
TRUNK / DECK RELEASE
AIR CONDITIONING
CHILD SEAT TETHER ANCHOR
VOICE RECOGNITION BUTTON
WARNING
TOW/ HAUL
TOW / HAUL
GLOW PLUG
POWER STEERING FLUID
WINDSHIELD WIPER AND WASHER
SIDE AIRBAG
AIRBAG
SLIDING DOOR
EMERGENCY RELEASE HANDLE
LIGHTER
LOWER ANCHORS AND TETHER FOR CHILDREN (LATCH)
UCONNECT™ BUTTON
HAZARD
4 LOW
FOUR WHEEL DRIVE LOW
MALFUNCTION INDICATOR LIGHT
TRANS OIL TEMP
ENGINE COOLANT TEMPERATURE
SRS AIRBAG
SUPPLEMENTAL RESTRAINT SYSTEM
PASSENGER AIRBAG OFF
DOOR AJAR
CONVERTIBLE TOP DOWN
CONVERTIBLE TOP UP
HORN
SEE OWNER'S MANUAL ISO
A/C PUSH
AIR CONDITIONER
OFF
ELECTRONIC STABILITY CONTROL OFF
010533317

WARNINGS AND CAUTIONS

This Owner's Manual contains **WARNINGS** against operating procedures that could result in a collision or bodily injury. It also contains **CAUTIONS** against procedures that could result in damage to your vehicle. If you do not read this entire Owner's Manual, you may miss important information. Observe all Warnings and Cautions.

VEHICLE MODIFICATIONS/ALTERATIONS

WARNING!

Any modifications or alterations to this vehicle could seriously affect its roadworthiness and safety and may lead to a collision resulting in serious injury or death.

ROLLOVER WARNING

Utility vehicles have a significantly higher rollover rate than other types of vehicles. This vehicle has a higher ground clearance and a higher center of gravity than many passenger vehicles. It is capable of performing better in a wide variety of off-road applications. Driven in an unsafe manner, all vehicles can go out of control. Because of the higher center of gravity, if this vehicle is out of control it may roll over while some other vehicles may not.

Do not attempt sharp turns, abrupt maneuvers, or other unsafe driving actions that can cause loss of vehicle control. Failure to operate this vehicle safely may result in a collision, rollover of the vehicle, and severe or fatal injury. Drive carefully.

Rollover Warning Label

Failure to use the driver and passenger seat belts provided is a major cause of severe or fatal injury. In fact, the U.S. government notes that the universal use of existing seat belts could cut the highway death toll by 10,000 or more each year and could reduce disabling injuries by two million annually. In a rollover crash, an unbelted person is significantly more likely to die than a person wearing a seat belt. Always buckle up.

CUSTOMER ASSISTANCE

CONTENTS

- SUGGESTIONS FOR OBTAINING SERVICE FOR YOUR VEHICLE 11
  - Prepare For The Appointment 11
  - Prepare A List 11
  - Be Reasonable With Requests 11
- IF YOU NEED ASSISTANCE 11
  - FCA US LLC Customer Center 12
  - FCA Canada Inc. Customer Center 12
  - In Mexico Contact 13
  - Puerto Rico And U.S. Virgin Islands 13
  - Customer Assistance For The Hearing Or Speech Impaired (TDD/TTY) 13
  - Service Contract 13
- WARRANTY INFORMATION 15
- REPORTING SAFETY DEFECTS 15
  - In The 50 United States And Washington, D.C.. .15
  - In Canada 15
- PUBLICATION ORDER FORMS 16

■ DEPARTMENT OF TRANSPORTATION UNIFORM TIRE QUALITY GRADES 17

□ Treadwear 17

□ Traction Grades. 17

□ Temperature Grades 18

SUGGESTIONS FOR OBTAINING SERVICE FOR YOUR VEHICLE

Prepare For The Appointment

If you are having warranty work done, be sure to have the right papers with you. Take your warranty folder. All work to be performed may not be covered by the warranty. Discuss additional charges with the service manager. Keep a maintenance log of your vehicle's service history. This can often provide a clue to the current problem.

Prepare A List

Make a written list of your vehicle's problems or the specific work you want done. If you've had an accident or work done that is not on your maintenance log, let the service advisor know.

Be Reasonable With Requests

If you list a number of items and you must have your vehicle by the end of the day, discuss the situation with the service advisor and list the items in order of priority. At many authorized dealers, you may obtain a rental vehicle at a minimal daily charge. If you need a rental, it is advisable to make these arrangements when you call for an appointment.

IF YOU NEED ASSISTANCE

The manufacturer and its authorized dealer are vitally interested in your satisfaction. We want you to be happy with our products and services.

Warranty service must be done by an authorized dealer. We strongly recommend that you take the vehicle to an authorized dealer. They know your vehicle the best, and are most concerned that you get prompt and high quality service. The manufacturer's authorized dealer have the

facilities, factory-trained technicians, special tools, and the latest information to ensure the vehicle is fixed correctly and in a timely manner.

This is why you should always talk to an authorized dealer service manager first. Most matters can be resolved with this process.

- If for some reason you are still not satisfied, talk to the general manager or owner of the authorized dealer. They want to know if you need assistance.
- If an authorized dealer is unable to resolve the concern, you may contact the manufacturer's customer center.

Any communication to the manufacturer's customer center should include the following information:

- Owner's name and address
- Owner's telephone number (home and office)
- Authorized dealer name
- Vehicle Identification Number (VIN)
- Vehicle delivery date and mileage

FCA US LLC Customer Center

P.O. Box 21–8004

Auburn Hills, MI 48321–8004

Phone: (877) 426-5337

FCA Canada Inc. Customer Center

P.O. Box 1621

Windsor, Ontario N9A 4H6

Phone: (800) 465-2001 English / (800) 387-9983 French

In Mexico Contact

Av. Prolongacion Paseo de la Reforma, 1240

Sante Fe C.P. 05109

Mexico, D. F.

In Mexico City: 5081-7568

Outside Mexico City: 1-800-505-1300

Puerto Rico And U.S. Virgin Islands

Customer Service Chrysler International Services LLC

P.O. Box 191857

San Juan 00919-1857

Tel.: (787) 782-5757

Fax: (787) 782-3345

Customer Assistance For The Hearing Or Speech Impaired (TDD/TTY)

To assist customers who have hearing difficulties, the manufacturer has installed special TDD (Telecommunication Devices for the Deaf) equipment at its customer center. Any hearing or speech impaired customer, who has access to a TDD or a conventional teletypewriter (TTY) in the United States, can communicate with the manufacturer by dialing 1-800-380-CHRY.

Canadian residents with hearing difficulties that require assistance can use the special needs relay service offered by Bell Canada. For TTY teletypewriter users, dial 711 and for Voice callers, dial 1-800-855-0511 to connect with a Bell Relay Service operator.

Service Contract

You may have purchased a service contract for a vehicle to help protect you from the high cost of unexpected repairs after the manufacturer's New Vehicle Limited

Warranty expires. The manufacturer stands behind only the manufacturer's service contracts. If you purchased a manufacturer's service contract, you will receive Plan Provisions and an Owner Identification Card in the mail within three weeks of the vehicle delivery date. If you have any questions about the service contract, call the manufacturer's Service Contract National Customer Hotline at 1-800-521-9922 (Canadian residents, call (800) 465-2001 English / (800) 387-9983 French).

The manufacturer will not stand behind any service contract that is not the manufacturer's service contract. It is not responsible for any service contract other than the manufacturer's service contract. If you purchased a service contract that is not a manufacturer's service contract, and you require service after the manufacturer's New Vehicle Limited Warranty expires, please refer to the contract documents, and contact the person listed in those documents.

We appreciate that you have made a major investment when you purchased the vehicle. An authorized dealer has also made a major investment in facilities, tools, and training to assure that you are absolutely delighted with the ownership experience. You will be pleased with their sincere efforts to resolve any warranty issues or related concerns.

WARNING!

Engine exhaust (internal combustion engines only), some of its constituents, and certain vehicle components contain, or emit, chemicals known to the State of California to cause cancer and birth defects, or other reproductive harm. In addition, certain fluids contained in vehicles and certain products of component wear contain, or emit, chemicals known to the State of California to cause cancer and birth defects, or other reproductive harm.

WARRANTY INFORMATION

See the Warranty Information Booklet, located on the DVD, for the terms and provisions of FCA US LLC warranties applicable to this vehicle and market.

REPORTING SAFETY DEFECTS

In The 50 United States And Washington, D.C.

If you believe that your vehicle has a defect that could cause a crash or cause injury or death, you should immediately inform the National Highway Traffic Safety Administration (NHTSA) in addition to notifying the manufacturer.

If NHTSA receives similar complaints, it may open an investigation, and if it finds that a safety defect exists in a group of vehicles, it may order a recall and remedy campaign. However, NHTSA cannot become involved in individual problems between you, your authorized dealer, and the manufacturer.

To contact NHTSA, you may either call the Auto Safety Hotline toll free at 1-888-327-4236 (TTY: 1-800-424-9153), or go to http://www.safercar.gov; or write to: Administrator, NHTSA, 1200 New Jersey Avenue, SE., West Building, Washington, D.C. 20590.

You can also obtain other information about motor vehicle safety from http://www.safercar.gov.

In Canada

If you believe that your vehicle has a safety defect, you should contact the Customer Service Department immediately. Canadian customers who wish to report a safety defect to the Canadian government should contact Transport Canada, Motor Vehicle Defect Investigations and Recalls at 1-800-333-0510 or go to http://www.tc.gc.ca/roadsafety/

PUBLICATION ORDER FORMS

To order the following manuals, you may use either the website or the phone numbers listed below. Visa, Mastercard, American Express, and Discover orders are accepted. If you prefer mailing your payment, please call for an order form.

NOTE: A street address is required when ordering manuals (no P.O. Boxes).

Service Manuals

These comprehensive Service Manuals provide the information that students and professional technicians need in diagnosing/troubleshooting, problem solving, maintaining, servicing, and repairing FCA US LLC vehicles. A complete working knowledge of the vehicle, system, and/or components is written in straightforward language with illustrations, diagrams, and charts.

Diagnostic Procedure Manuals

Diagnostic Procedure Manuals are filled with diagrams, charts and detailed illustrations. These practical manuals make it easy for students and technicians to find and fix problems on computer-controlled vehicle systems and features. They show exactly how to find and correct problems the first time, using step-by-step troubleshooting and drivability procedures, proven diagnostic tests and a complete list of all tools and equipment.

Owner's Manuals

These Owner's Manuals have been prepared with the assistance of service and engineering specialists to acquaint you with specific FCA US LLC vehicles. Included are starting, operating, emergency and maintenance procedures as well as specifications, capabilities and safety tips.

Call toll free at:

- **1-800-890-4038 (U.S.)**
- **1-800-387-1143 (Canada)**

Or

Visit us on the Worldwide Web at:

- www.techauthority.com

DEPARTMENT OF TRANSPORTATION UNIFORM TIRE QUALITY GRADES

The following tire grading categories were established by the National Highway Traffic Safety Administration. The specific grade rating assigned by the tire's manufacturer in each category is shown on the sidewall of the tires on your vehicle.

All passenger vehicle tires must conform to Federal safety requirements in addition to these grades.

Treadwear

The Treadwear grade is a comparative rating, based on the wear rate of the tire when tested under controlled conditions on a specified government test course. For example, a tire graded 150 would wear one and one-half times as well on the government course as a tire graded 100. The relative performance of tires depends upon the actual conditions of their use, however, and may depart significantly from the norm due to variations in driving habits, service practices, and differences in road characteristics and climate.

Traction Grades

The Traction grades, from highest to lowest, are AA, A, B, and C. These grades represent the tire's ability to stop on wet pavement, as measured under controlled conditions on specified government test surfaces of asphalt and concrete. A tire marked C may have poor traction performance.

WARNING!

The traction grade assigned to this tire is based on straight-ahead braking traction tests, and does not include acceleration, cornering, hydroplaning, or peak traction characteristics.

Temperature Grades

The temperature grades are A (the highest), B, and C, representing the tire's resistance to the generation of heat and its ability to dissipate heat, when tested under controlled conditions on a specified indoor laboratory test wheel. Sustained high temperature can cause the material of the tire to degenerate and reduce tire life, and excessive temperature can lead to sudden tire failure. The grade C corresponds to a level of performance, which all passenger vehicle tires must meet under the Federal Motor Vehicle Safety Standard No. 109. Grades B and A represent higher levels of performance on the laboratory test wheel, than the minimum required by law.

WARNING!

The temperature grade for this tire is established for a tire that is properly inflated and not overloaded. Excessive speed, under-inflation, or excessive loading, either separately or in combination, can cause heat buildup and possible tire failure.

GRAPHICAL TABLE OF CONTENTS

CONTENTS

■ FRONT VIEW 20
- □ Front View (Trailhawk) 21

■ REAR VIEW 22
- □ Rear View (Trailhawk) 23

■ INSTRUMENT PANEL 24

■ INTERIOR 25

FRONT VIEW

Front View

1 — Headlights
2 — Engine Compartment
3 — Windshield
4 — Doors
5 — Exterior Mirrors
6 — Wheels

Front View (Trailhawk)

Front View (Trailhawk)

1 — Headlights
2 — Engine Compartment
3 — Windshield
4 — Doors
5 — Exterior Mirrors
6 — Wheels

REAR VIEW

Rear View

1 — Rear Lights
2 — Rear Windshield Wiper
3 — Liftgate

Rear View (Trailhawk)

Rear View (Trailhawk)

1 — Rear Lights
2 — Rear Windshield Wiper
3 — Liftgate

INSTRUMENT PANEL

Instrument Panel

1 — Headlight Switch
2 — Air Vents
3 — Instrument Cluster
4 — Multifunction Lever
5 — Windshield Wiper Lever
6 — Air Vents
7 — Hand Grip
8 — Glove Compartment
9 — Steering Wheel

INTERIOR

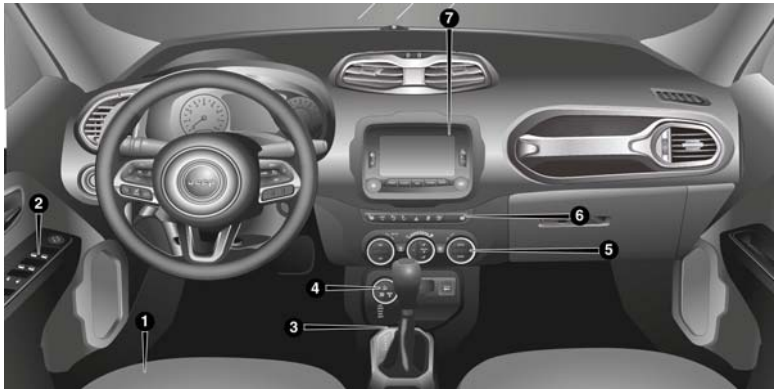

Interior Features

1 — Seats
2 — Power Window Switches
3 — Transmission Shift Lever (Automatic/Manual options)
4 — Selec Terrain Mode Knob — If Equipped
5 — Climate Controls
6 — Switch Panel
7 — Uconnect Radio

GETTING TO KNOW YOUR VEHICLE

CONTENTS

■ KEYS 31

□ Key Fob With Remote Control 31

■ IGNITION SWITCH 41

□ Operation. 41

■ REMOTE STARTING SYSTEM — IF EQUIPPED 45

□ Remote Start Cancel Message — If Equipped 46

□ How To Use Remote Start 46

□ To Enter Remote Start Mode. 47

□ To Exit Remote Start Mode Without Driving The Vehicle 48

□ To Exit Remote Start Mode And Drive The Vehicle. 48

□ Remote Start Comfort Systems — If Equipped 48

□ Remote Start Windshield Wiper De–Icer Activation — If Equipped 49

□ General Information 49

■ SENTRY KEY 50

□ General Information 51

■ VEHICLE SECURITY ALARM 51
□ To Arm The System 52
□ To Disarm The System 53
□ Disabling 54
■ DOORS 54
□ Manual Door Locks 54
□ Central Lock/Unlock 56
□ Keyless Enter-N-Go 58
□ Child Locks 65
■ SEATS 66
□ Manual Front Seats 67
□ Power Adjustment (Front) — If Equipped 69
□ Heated Seats — If Equipped. 71
□ Rear Seats. 72
■ HEAD RESTRAINTS 78
□ Front Head Restraints 79
□ Rear Head Restraints 80
■ STEERING WHEEL 81
□ Tilt/Telescoping Steering Column 81
□ Heated Steering Wheel — If Equipped 82
■ MIRRORS 83
□ Inside Day/Night Mirror 83
□ Auto Dimming Mirror — If Equipped 84
□ Outside Mirrors 85
□ Heated Mirrors — If Equipped 87

■ BLIND SPOT MONITORING (BSM) — IF EQUIPPED 87
□ Rear Cross Path (RCP) 93
□ Mode Of Operation 94
□ Blind Spot Monitoring Fault Warnings 95
□ General Information 96
■ EXTERIOR LIGHTS 97
□ Headlights 97
□ Automatic Lighting — If Equipped 98
□ Daytime Running Lights (DRL) — If Equipped 98
□ Front Fog Lights — If Equipped 99
□ Parking Lights 99
□ Headlight Delay 99
□ Flash-To-Pass 100
□ High Beams 101
□ Turn Signals 101
■ INTERIOR LIGHTS 102
□ Front Lights 102
□ Interior Lights Dimmer Switch 107
■ WIPERS AND WASHERS 108
□ Front Wiper Operation 108
□ Rear Wiper Operation 111
□ Windshield Wiper De-Icer — If Equipped 113
■ WINDOWS 114
□ Power Windows 114

■ CLIMATE CONTROLS 117
- □ Air Outlet And Diffuser Locations — Passenger Compartment 117
- □ Manual Climate Controls — If Equipped 119
- □ Automatic Climate Controls — If Equipped . .123

■ MY SKY SUN ROOF — IF EQUIPPED 136
- □ Removable Roof — IF Equipped 136
- □ Power My Sky — If Equipped 137
- □ Removing And Installing Panels 139
- □ Bag For Housing Panels — If Equipped 145
- □ Emergency Open/Close 148

■ HOOD 150

■ LIFTGATE 152
- □ Opening 152
- □ Closing 155
- □ Cargo Area Features. 156

■ INTERNAL EQUIPMENT 163
- □ Glove Compartment 163
- □ Sun Visors 164
- □ Power Outlets 166
- □ Power Inverter — If Equipped 168
- □ Cigar Lighter — Optional. 169
- □ Ashtray — Optional. 170
- □ Front Armrest 171
- □ Cupholders 172
- □ Handle Grip 173

■ ROOF LUGGAGE RACK — IF EQUIPPED 174

KEYS

Your vehicle uses either a key start ignition system or keyless ignition system. The key start ignition system consists of a Key Fob with a Remote Keyless Entry (RKE) transmitter and an Ignition Node Module (IGNM). The keyless ignition system consists of a Key Fob with Remote Keyless Entry (RKE) transmitter and a Keyless Ignition Node (KIN).

Key Fob With Remote Control

The Key Fob with Remote Control contains a Remote Keyless Entry (RKE) transmitter. The RKE system allows you to lock or unlock the doors and liftgate or activate the Panic Alarm from distances up to approximately 66 ft (20 m) using a handheld Key Fob with a RKE transmitter. The RKE transmitter does not need to be pointed at the vehicle to activate the system.

NOTE: In the ON/RUN position, the LOCK button is disabled. Only the UNLOCK button is enabled.

Vehicles With Keyless Enter-N-Go

Keyless Enter-N-Go Key Fob

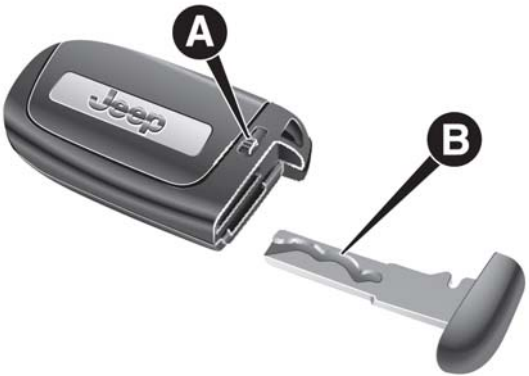

Keyless Enter-N-Go Key Fob Emergency Key Release

A — Emergency Key Release Button
B — Emergency Key

Key Fob With Remote Control And Integrated Vehicle Key

The Key Fob With Remote Control contains the RKE transmitter with an integrated vehicle key. To use the vehicle key, simply push the vehicle key release button.

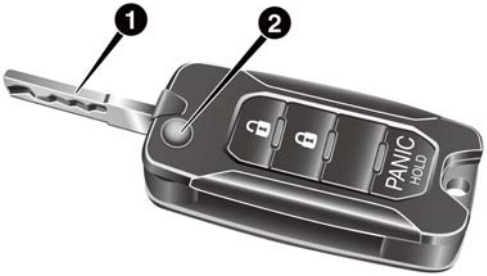

Integrated Vehicle Key

1 — Vehicle Key
2 — Vehicle Key Release Button

General Information

The following regulatory statement applies to all radio frequency (RF) devices equipped in this vehicle:

This device complies with Part 15 of the FCC Rules and with Industry Canada licence-exempt RSS standard(s). Operation is subject to the following two conditions:

1. This device may not cause harmful interference, and
2. This device must accept any interference received, including interference that may cause undesired operation.

NOTE: Changes or modifications not expressly approved by the party responsible for compliance could void the user's authority to operate the equipment.

To Unlock The Doors And Liftgate

The driver's door may be unlocked by inserting the vehicle key into the exterior driver's door lock cylinder. To unlock all the doors, push the interior door unlock button on the door panel.

Push and release the UNLOCK button on the RKE transmitter once to unlock the driver's door or twice within five seconds to unlock all doors and the liftgate. The turn signal lights will flash to acknowledge the unlock signal. The illuminated entry system will also turn on.

1st Push Of Key Fob Unlocks

This feature lets you program the system to unlock either the driver's door or all doors on the first push of the UNLOCK button on the RKE transmitter. To change the current setting, refer to "Uconnect SETTINGS" in "Multimedia" for further information.

NOTE: If the vehicle is equipped with Passive Entry, refer to "Keyless Enter-N-Go" in "Getting To Know Your Vehicle" for further information.

To Lock The Doors And Liftgate

If equipped, the doors may be locked by inserting the vehicle key into the exterior driver's door lock cylinder.

Push and release the LOCK button on the RKE transmitter to lock all doors and liftgate. The turn signal lights will flash and the horn will chirp to acknowledge the signal. Settings in radio can change to lights only, chirp only, or both.

If the vehicle is equipped with Passive Entry, refer to "Keyless Enter-N-Go" in "Getting To Know Your Vehicle" for further information.

Key Fob With Remote Control And Integrated Vehicle Key

If one or more doors are open, or the liftgate is open, the doors will lock. This is signaled by a quick flash of the turn signals.

Vehicles With Keyless Enter-N-Go

If one or more doors are open, or the liftgate is open, the doors will lock. The doors will unlock again only if the key is inside the passenger compartment.

NOTE:

- The current setting can be changed within the Electronic Vehicle Information Center (EVIC) menu or in the Uconnect Settings so that the system will allow/ inhibit the ability to lock the doors when one or more of them are open.
- For more information, refer to "Multi-Functional Display (EVIC)" in "Getting To Know Your Instrument Panel," subsection "Electronic Vehicle Information Center (EVIC)/ Driver Information Display (DID)," or "Uconnect Settings" in "Multimedia."

Replacing The Battery In The Key Fob With Remote Control

The recommended replacement battery is one CR2032 battery.

NOTE:

- Perchlorate Material — special handling may apply. See www.dtsc.ca.gov/hazardouswaste/perchlorate
- Do not touch the battery terminals that are on the back housing or the printed circuit board.

Key Fob With Remote Control

1. Separating RKE halves requires screw removal (if equipped) and gently prying the two halves of the RKE transmitter apart using a screwdriver or similar tool. Make sure not to damage the seal during removal.

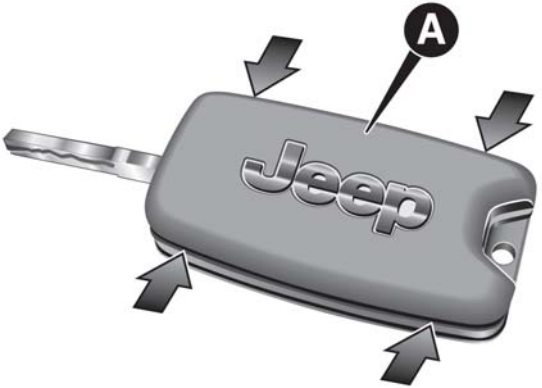

Integrated Vehicle Key Battery Removal

A — RKE Transmitter

2. Remove the battery by turning the back cover over (battery facing downward) and tapping it lightly on a solid surface such as a table or similar surface. Then, replace the battery.

When replacing the battery, match the + sign on the battery to the + sign on the inside of the battery clip, located on the back cover. Avoid touching the new battery with your fingers. Skin oils may cause battery deterioration. If you touch a battery, clean it with rubbing alcohol.

Integrated Vehicle Key Battery Removal

B — Battery

Separating Keyless Enter-N-Go Transmitter Case

1. Remove the emergency key by sliding the mechanical latch on the back of the RKE transmitter sideways with your thumb. Then, pull the key out with your other hand.
2. Separating RKE halves requires screw removal (if equipped) and gently prying the two halves of the RKE transmitter apart with the emergency key. Make sure not to damage the seal during removal.

Separating Keyless Enter-N-Go Transmitter Case

A — RKE Transmitter

3. Remove the battery by turning the back cover over (battery facing downward) and tapping it lightly on a solid surface such as a table or similar surface. Then, replace the battery.

When replacing the battery, match the + sign on the battery to the + sign on the inside of the battery clip, located on the back cover. Avoid touching the new battery with your fingers. Skin oils may cause battery deterioration. If you touch a battery, clean it with rubbing alcohol.

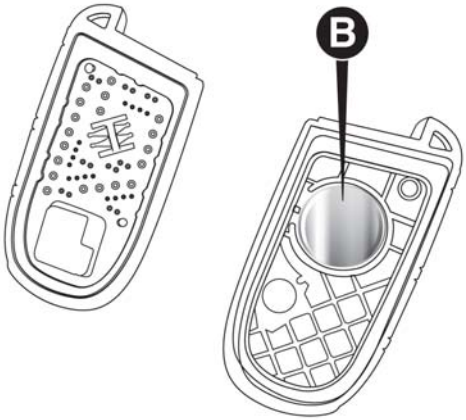

Keyless Enter-N-Go Battery Replacement

B — Battery

4. To assemble the RKE transmitter case, snap the two halves together and insert the emergency key.

Programming Additional Transmitters

Programming Key Fobs or RKE transmitters may be performed at an authorized dealer.

Request For Additional Key Fobs

NOTE: Only Key Fobs that are programmed to the vehicle electronics can be used to start and operate the vehicle. Once a Key Fob is programmed to a vehicle, it cannot be programmed to any other vehicle.

CAUTION!

- **Always remove the Key Fobs from the vehicle and lock all doors when leaving the vehicle unattended.**
- **For vehicles equipped with Keyless Enter-N-Go, always remember to place the ignition in the OFF position.**

At the time of purchase, the original owner is provided with a four-digit Personal Identification Number (PIN). Keep the PIN in a secure location. This number is required for authorized dealer replacement of Key Fobs. Duplication of Key Fobs may be performed at an authorized dealer. This procedure consists of programming a blank Key Fob to the vehicle electronics. A blank Key Fob is one that has never been programmed.

NOTE: When having the Sentry Key Immobilizer System serviced, bring all vehicle keys with you to an authorized dealer.

IGNITION SWITCH

Operation

Your vehicle uses either a key start ignition system or keyless ignition system. The key start ignition system consists of a Key Fob with a Remote Keyless Entry (RKE) transmitter and an Ignition Node Module (IGNM). The keyless ignition system consists of a Key Fob with Remote Keyless Entry (RKE) transmitter and a Keyless Ignition Node (KIN).

Models With Integrated Vehicle Key

The Ignition Node Module (IGNM) operates similar to an ignition switch. It has three operating positions, two with detents and one that is spring-loaded. The detent positions are STOP/OFF, MAR/RUN, and AVV/START. The AVV/START position is a spring-loaded momentary contact position. When released from the AVV/START position, the switch automatically returns to the MAR/RUN position.

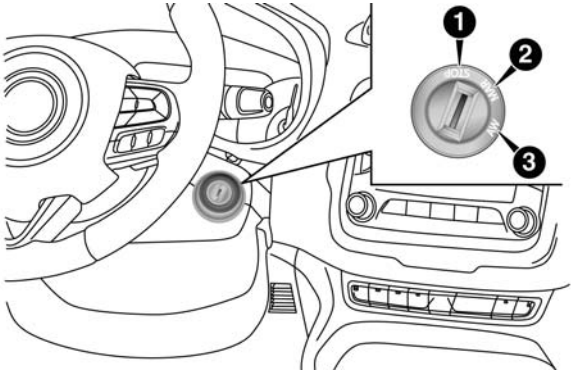

Ignition Node Module (IGNM)

1 — STOP/OFF

- The engine is stopped.
- The key can be removed from the IGNM.
- The steering column can be locked (with the ignition key removed).

- Some electrical devices (e.g. power locks, alarm, etc.) are still available.

2 — MAR/RUN

- Driving position.
- Electrical devices are available.

3 — AVV/START

- Start the engine.

The ignition switch is provided with a safety mechanism. If the engine fails to start, the ignition should be returned to the STOP/OFF position prior to repeating the starting procedure.

On models equipped with an automatic transmission, the ignition key is only removable when the shift lever is in PARK (P).

Models With Keyless Enter-N-Go

This feature allows the driver to operate the ignition switch with the push of a button as long as the Remote Keyless Entry (RKE) transmitter is in the passenger compartment.

The Keyless Ignition Node (KIN System) has three operating positions. The three positions are STOP, RUN, and START.

NOTE: If the ignition switch does not change with the push of a button, the RKE transmitter (Key Fob) may have a low or dead battery. In this situation, a back up method can be used to operate the ignition switch. Put the nose side (side opposite of the emergency key) of the Key Fob against the ENGINE START/STOP button and push to operate the ignition switch.

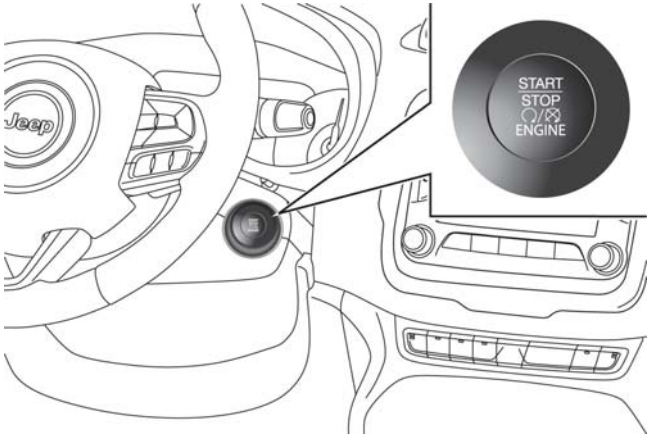

START/STOP Button

The KIN can be placed in the following positions:

STOP

- The engine is stopped.
- Some electrical devices (e.g. Central locking, alarm, etc.) are still available.

RUN

- Driving position.
- All the electrical devices are available.

START

- Start the engine.

NOTE: The vehicle will not start if the FOBIK is located inside the cargo area AND the liftgate is opened.

WARNING!

- **When leaving the vehicle, always remove the Key Fob from the vehicle and lock your vehicle.**
- **Never leave children alone in a vehicle, or with access to an unlocked vehicle.**
- **Allowing children to be in a vehicle unattended is dangerous for a number of reasons. A child or others could be seriously or fatally injured. Children should be warned not to touch the parking brake, brake pedal or the gear selector.**
- **Do not leave the Key Fob in or near the vehicle, or in a location accessible to children, and do not leave the ignition of a vehicle equipped with Keyless Enter-N-Go in the MAR/RUN mode. A child could operate power windows, other controls, or move the vehicle.**

(Continued)

WARNING! ***(Continued)***

- **Do not leave children or animals inside parked vehicles in hot weather. Interior heat build-up may cause serious injury or death.**

CAUTION!

An unlocked car is an invitation to thieves. Always remove key from the ignition and lock all doors when leaving the vehicle unattended.

NOTE: For further information, refer to "Starting the Engine," in "Starting And Operating."

General Information

The following regulatory statement applies to all radio frequency (RF) devices equipped in this vehicle:

This device complies with Part 15 of the FCC Rules and with Industry Canada licence-exempt RSS standard(s). Operation is subject to the following two conditions:

1. This device may not cause harmful interference, and
2. This device must accept any interference received, including interference that may cause undesired operation.

NOTE: Changes or modifications not expressly approved by the party responsible for compliance could void the user's authority to operate the equipment.

REMOTE STARTING SYSTEM — IF EQUIPPED

This system uses the Remote Keyless Entry (RKE) transmitter to start the engine conveniently from outside the vehicle while still maintaining security. The system has a range of 246 ft (75 m).

The Remote Starting System also activates the Climate Control and (if equipped) the optional heated seats and optional heated steering wheel depending on temperatures outside and inside the car.

NOTE:

- The vehicle must be equipped with an automatic transmission to be equipped with Remote Start.
- Obstructions between the vehicle and RKE transmitter may reduce this range.

Remote Start Cancel Message — If Equipped

The following messages will display in the instrument cluster if the vehicle fails to remote start or exits remote start prematurely:

- Remote Start Cancelled — Door Open
- Remote Start Cancelled — Hood Open
- Remote Start Cancelled — Fuel Low
- Remote Start Cancelled — Liftgate Open
- Remote Start Disabled — Start Vehicle To Reset
- Remote Start Cancelled — Too Cold
- Remote Start Cancelled — Time Expired

The message will stay active until the ignition is placed in the MAR/RUN position.

How To Use Remote Start

All of the following conditions must be met before the engine will remote start:

- Shift Lever in PARK
- Doors closed
- Hood closed
- Liftgate closed
- Hazard switch off
- Brake switch inactive (brake pedal not pushed)
- Battery at an acceptable charge level
- RKE PANIC button not pushed
- System not disabled from previous remote start event
- Vehicle alarm system indicator flashing

- Ignition in STOP/OFF position
- Fuel level meets minimum requirement

WARNING!

- **Do not start or run an engine in a closed garage or confined area. Exhaust gas contains Carbon Monoxide (CO) which is odorless and colorless. Carbon Monoxide is poisonous and can cause serious injury or death when inhaled.**
- **Keep Remote Keyless Entry (RKE) transmitters away from children. Operation of the Remote Start System, windows, door locks or other controls could cause serious injury or death.**

To Enter Remote Start Mode

Push and release the REMOTE START button on the RKE transmitter twice within five seconds. The vehicle doors will lock, the turn signals will flash, and the horn will chirp twice. Then, the engine will start, and the vehicle will remain in the Remote Start mode for a 15-minute cycle.

NOTE:

- If an engine fault is present or fuel level is low, the vehicle will start and then shut down in 10 seconds.
- The park lamps will turn on and remain on during Remote Start mode.
- For security, power window operation is disabled when the vehicle is in the Remote Start mode.

To Exit Remote Start Mode Without Driving The Vehicle

Push and release the REMOTE START button one time or allow the engine to run for the entire 15-minute cycle.

NOTE: To avoid unintentional shutdowns, the system will disable the one time push of the REMOTE START button for two seconds after receiving a valid Remote Start request.

To Exit Remote Start Mode And Drive The Vehicle

Before the end of 15-minute cycle, push and release the UNLOCK button on the RKE transmitter to unlock the doors and disarm the Vehicle Security Alarm (if equipped). Then, prior to the end of the 15-minute cycle, for vehicles equipped with the Keyless Enter-N-Go feature push and release the START/STOP button; for vehicles not equipped with Keyless Enter-N-Go feature put the key in RUN position.

NOTE: For vehicles equipped with the Keyless Enter-N-Go feature, the message “Remote Start Active — Push Start Button” will display in the Electronic Vehicle Information Center (EVIC) or the Driver Information Dispay (DID) until you push the START button.

NOTE: For vehicles not equipped with the Keyless Enter-N-Go feature, the message “Remote Start Active — Key to RUN” will display in the Electronic Vehicle Information Center (EVIC) until you put the key in RUN position.

Remote Start Comfort Systems — If Equipped

When Remote Start is activated, the heated steering wheel and driver heated seat features will automatically turn on in cold weather. These features will stay on through the duration of Remote Start or until the ignition switch is cycled to the MAR/RUN position.

NOTE: The Remote Start Comfort System can be activated and deactivated through the Uconnect Settings. For more information on Remote Start Comfort System operation, refer to "Uconnect Settings" in "Multimedia."

Remote Start Windshield Wiper De–Icer Activation — If Equipped

When Remote Start is active and the outside ambient temperature is less than 40° F (4.4° C), the Windshield Wiper De-Icer will be enabled. Exiting Remote Start will resume previous operation, except if the Windshield Wiper De-Icer is active. The Windshield Wiper De-Icer timer and operation will continue.

General Information

The following regulatory statement applies to all radio frequency (RF) devices equipped in this vehicle:

This device complies with Part 15 of the FCC Rules and with Industry Canada licence-exempt RSS standard(s). Operation is subject to the following two conditions:

1. This device may not cause harmful interference, and
2. This device must accept any interference received, including interference that may cause undesired operation.

NOTE: Changes or modifications not expressly approved by the party responsible for compliance could void the user's authority to operate the equipment.

SENTRY KEY

The Sentry Key Immobilizer system prevents unauthorized vehicle operation by disabling the engine. The system does not need to be armed or activated. Operation is automatic, regardless of whether the vehicle is locked or unlocked.

The system uses a Key Fob with a factory-mated Remote Keyless Entry (RKE) transmitter, a Keyless Push Button Ignition, and a RF receiver to prevent unauthorized vehicle operation. Therefore, only Key Fobs that are programmed to the vehicle can be used to start and operate the vehicle. The system will not allow the engine to crank if an invalid Key Fob tries to start the engine.

After placing the ignition to the ON/RUN position, if there is a problem with the system, the Vehicle Security Light will turn on. This condition will result in the engine being shut off after two seconds. Should this occur, have the vehicle serviced as soon as possible by an authorized dealer.

CAUTION!

- **Do not make modifications or alterations to the immobilizer system. Modifications or alterations to the immobilization system may result in a loss of security protection.**
- **The Sentry Key Immobilizer system is not compatible with some aftermarket remote starting systems. Use of these systems may result in vehicle starting problems and loss of security protection.**

General Information

The following regulatory statement applies to all radio frequency (RF) devices equipped in this vehicle:

This device complies with Part 15 of the FCC Rules and with Industry Canada licence-exempt RSS standard(s). Operation is subject to the following two conditions:

1. This device may not cause harmful interference, and
2. This device must accept any interference received, including interference that may cause undesired operation.

NOTE: Changes or modifications not expressly approved by the party responsible for compliance could void the user's authority to operate the equipment.

VEHICLE SECURITY ALARM

The Vehicle Security Alarm monitors the vehicle doors for unauthorized entry and if the ignition switch is cycled to the ON/RUN position without a valid key. While the Vehicle Security Alarm is armed, interior switches for door locks and liftgate release are disabled.

If something triggers the alarm, the Vehicle Security Alarm will provide the following audible and visible signals:

- Horn will pulse.
- Park lamps and/or turn signals will flash.

- Vehicle Security Light in the instrument cluster will flash.

Vehicle Security Light Location

A — Vehicle Security Light

To Arm The System

Follow these steps to arm the Vehicle Security Alarm:

1. Make sure the vehicles ignition is cycled to the STOP/OFF position (refer to "Starting The Engine" in "Starting And Operating" for further information).
   - For vehicles equipped with Keyless Enter-N-Go, make sure the vehicle ignition system is OFF.
   - For vehicles not equipped with Keyless Enter-N-Go, make sure the vehicle ignition system is STOP/OFF, and the key is physically removed from the ignition.
2. Perform one of the following methods to lock the vehicle:
   - Push LOCK on the interior power door lock switch with the driver and/or passenger door open.
   - Push the LOCK button on the exterior Passive Entry Door Handle with a valid Key Fob available in the

same exterior zone (for further information, refer to "Keyless Enter-N-Go" in "Getting To Know Your Vehicle").

- Push the LOCK button on the Remote Keyless Entry (RKE) transmitter.

3. If any doors are open, close them.

NOTE:

- If a second chime is heard after approximately four seconds from arming the alarm, disarm the alarm by pressing the UNLOCK button. Check for the correct closure of doors and liftgate, then reactivate the system by following steps 1 and 2.
- If a second chime is heard after approximately four seconds from arming the alarm, even with the doors and liftgate properly closed, a fault may have occurred during the arming operation. If this occurs, contact your authorized dealer.

To Disarm The System

The Vehicle Security Alarm can be disarmed using any of the following methods:

- Push the UNLOCK button on the Remote Keyless Entry (RKE) transmitter.
- Grasp the Passive Entry Unlock Door Handle with a valid Key Fob available in the same exterior zone (if equipped). Refer to "Keyless Enter-N-Go" in "Getting To Know Your Vehicle" for further information.
- Cycle the vehicle ignition system out of the STOP/OFF position.
  - For vehicles equipped with Keyless Enter-N-Go, push the Keyless Enter-N-Go START/STOP button (requires at least one valid Key Fob in the vehicle).
  - For vehicles not equipped with Keyless Enter-N-Go, insert a valid key into the ignition switch and turn the key to the MAR/RUN position.

NOTE:

- The driver's door key cylinder cannot arm or disarm the Vehicle Security Alarm.
- When the Vehicle Security Alarm is armed, the interior power door lock switches will not unlock the doors.

The Vehicle Security Alarm is designed to protect your vehicle. However, you can create conditions where the system will give you a false alarm. If one of the previously described arming sequences has occurred, the Vehicle Security Alarm will arm regardless of whether you are in the vehicle or not. If you remain in the vehicle and open a door, the alarm will sound. If this occurs, disarm the Vehicle Security Alarm.

If the Vehicle Security Alarm is armed and the battery becomes disconnected, the Vehicle Security Alarm will remain armed when the battery is reconnected.

Disabling

To completely disable the alarm (e.g. in the case of long inactivity of the car), lock the doors by turning the vehicle key in the exterior door lock cylinder.

NOTE: If the batteries in the RKE transmitter discharge in the event of a failure to the system, or to switch off the alarm, place the ignition in the MAR/RUN position.

DOORS

Manual Door Locks

To lock each door, rotate the door lock button on each door trim panel forward. To unlock the doors, pull the inside door handle to the first detent or rotate the door lock button until the lock symbol is no longer visible.

If the lock symbol is visible when the door is shut, the door will lock. Therefore, make sure the Key Fob is not inside the vehicle before closing the door.

Locking/Unlocking Doors From Outside

With the doors closed, insert the key blade into the driver exterior door lock cylinder and turn to the right to lock the driver's door.

To unlock the driver's door, insert the key blade into the driver exterior door lock cylinder and turn to the left to unlock the driver's door.

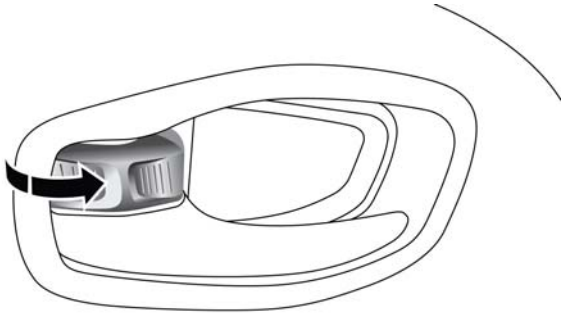

Manual Door Lock

NOTE: The manual lock knob unlocks each individual door separately.

WARNING!

- **For personal security and safety in the event of a collision, lock the vehicle doors before you drive as well as when you park and leave the vehicle.**
- **When leaving the vehicle, always remove the Key Fob from the vehicle and lock your vehicle. Unsupervised use of vehicle equipment may cause severe personal injuries or death.**
- **Never leave children alone in a vehicle, or with access to an unlocked vehicle. Allowing children to be in a vehicle unattended is dangerous for a number of reasons. A child or others could be seriously or fatally injured. Children should be warned not to touch the parking brake, brake pedal or the gear selector.**
- **Do not leave the Key Fob in or near the vehicle, or in a location accessible to children, and do not**

(Continued)

WARNING! ***(Continued)***

leave the ignition of a vehicle equipped with Keyless Enter-N-Go in the RUN mode. A child could operate power windows, other controls, or move the vehicle.

Central Lock/Unlock

A power door lock switch is located on each of the front door trim panels. This switch is used to lock or unlock the doors and liftgate.

Locking/Unlocking From The Inside

Push the button on the driver or passenger door trim panel to lock the doors.

With the doors locked, push the button to unlock the doors.

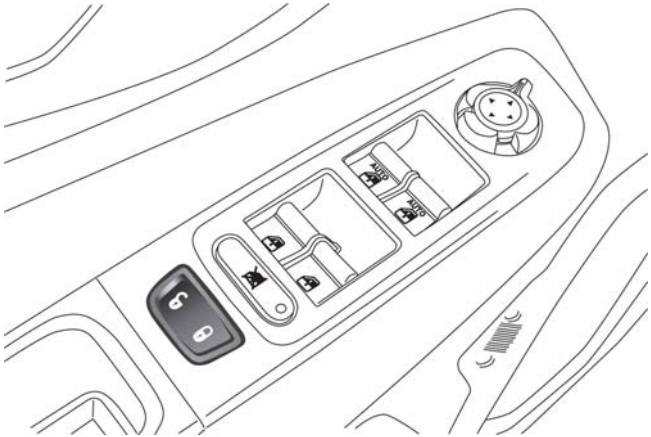

Power Door Lock Switch

The doors can also be locked and unlocked with the Keyless Enter-N-Go (Passive Entry) system if equipped. Refer to “Keyless Enter-N-Go” in “Getting To Know Your Vehicle” for further information.

The power locks will continue to operate while the ignition is in the MAR/RUN and STOP/OFF position. If a door is open, and the ignition is in the MAR/RUN position, a chime will sound as a reminder to remove the key.

NOTE: If all of the doors are closed properly, the door locks will lock automatically when the vehicle’s speed exceeds 12 mph (20 km/h). Refer to “Uconnect SETTINGS” in “Multimedia” for further information.

Keyless Enter-N-Go

The Passive Entry system is an enhancement to the vehicle's Remote Keyless Entry (RKE) system and a feature of Keyless Enter-N-Go. This feature allows you to lock and unlock the vehicle's door(s) without having to push the RKE transmitter LOCK or UNLOCK buttons.

NOTE:

- Passive Entry can be enabled or disabled. Refer to "Uconnect SETTINGS" in "Multimedia" for further information.
- If wearing gloves on your hands, or if it has been raining on the Passive Entry door handle, the unlock sensitivity can be affected, resulting in a slower response time.
- If the vehicle is unlocked by the Passive Entry Door Handle, and no door is opened within 60 seconds, the vehicle will re-lock and if equipped, the security alarm will arm.

To Unlock From The Driver's Side

With a valid Passive Entry RKE transmitter within 5 ft (1.5 m) of the driver's door handle, grab the front driver door handle to unlock the driver's door automatically.

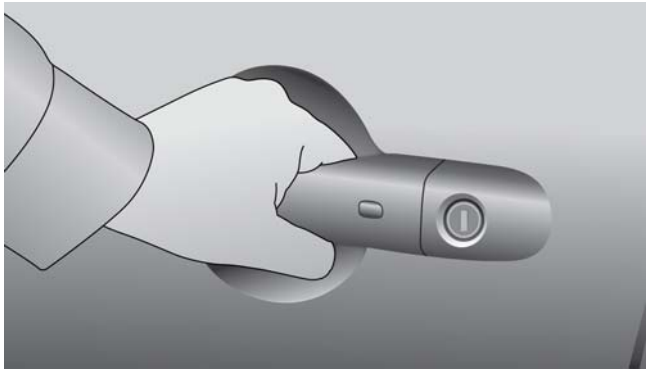

Grab The Door Handle To Unlock

NOTE: If "Unlock All Doors 1st Press" is programmed, all doors will unlock when you grab hold of the front driver's door handle. To select between "Unlock Driver Door 1st Press" and "Unlock All Doors 1st Press," refer to "Uconnect SETTINGS" in "Multimedia" for further information.

To Unlock From The Passenger Side

With a valid Passive Entry RKE transmitter within 5 ft (1.5 m) of the passenger door handle, grab the front passenger door handle to unlock all four doors and the liftgate automatically.

NOTE: All doors will unlock when the front passenger door handle is grabbed regardless of the driver's door unlock preference setting ("Unlock Driver Door 1st Press" or "Unlock All Doors 1st Press").

To Lock The Vehicle's Doors And Liftgate

With one of the vehicle's Passive Entry RKE transmitters within 5 ft (1.5 m) of the driver or passenger front door handles, push the door handle LOCK button to lock all four doors.

Do NOT grab the door handle when pushing the door handle LOCK button. This could unlock the door(s).

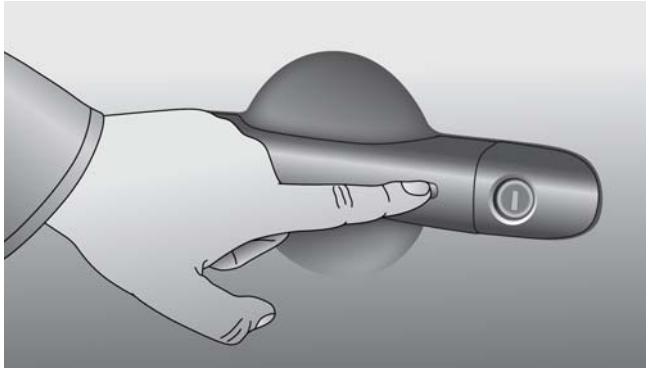

Push The Door Handle Button To Lock

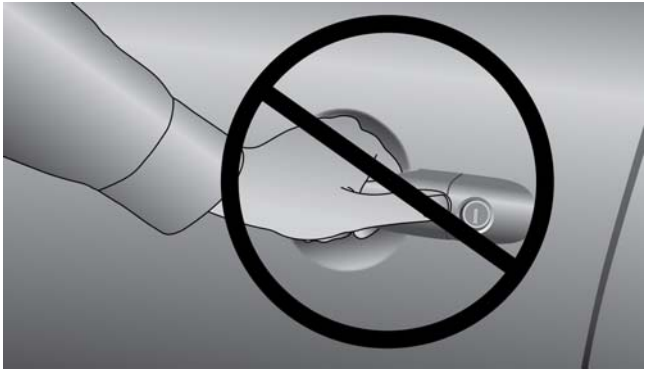

DO NOT Grab The Door Handle When Locking

NOTE: The Passive Entry system will not operate if the RKE transmitter battery is dead.

The vehicle doors can also be locked by using the lock button located on the vehicle's interior door panel.

Preventing Inadvertent Locking Of Passive Entry RKE Transmitter In Vehicle (FOBIK-Safe)

To minimize the possibility of unintentionally locking a Passive Entry RKE transmitter inside your vehicle, the Passive Entry system is equipped with an automatic door unlock feature which will function if the ignition switch is in the OFF position.

FOBIK-Safe only executes in vehicles with Passive Entry. There are three situations that trigger a FOBIK-Safe search in any Passive Entry vehicle:

1. A lock request is made by a valid Passive Entry RKE transmitter while a door is open.
2. A lock request is made by the Passive Entry door handle while a door is open.
3. A lock request is made by the door panel switch while the door is open.

When any of these situations occur, after all open doors are shut, the FOBIK-Safe search will be executed. If it finds a Passive Entry RKE transmitter inside the car, and it does not find any Passive Entry RKE transmitters outside the car, then the car will unlock and alert the customer.

NOTE: The vehicle will only unlock the doors when a valid Passive Entry RKE transmitter is detected inside the vehicle, and no valid Passive Entry RKE transmitter is detected outside the vehicle. The vehicle will not unlock the doors when any of the following conditions are met:

- The doors are manually locked using the door lock knobs.
- There is a valid Passive Entry RKE transmitter outside the vehicle and within 5 ft (1.5 m) of either Passive Entry door handle.

To Unlock/Enter The Liftgate

The liftgate Passive Entry unlock feature is built into the electronic liftgate release. With a valid Passive Entry RKE transmitter within 3 ft (1.0 m) of the liftgate, push the Electronic Liftgate release to open with one fluid motion.

To Lock The Liftgate

With a valid Passive Entry RKE transmitter within 3 ft (1.0 m) of the liftgate, push the Passive Entry LOCK button located to the right of electronic liftgate release.

NOTE: The liftgate Passive Entry lock button will lock the liftgate and the doors. The liftgate unlock feature is built into the Electronic Liftgate release.

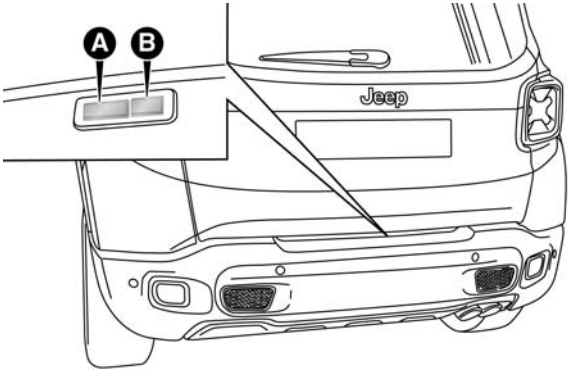

Liftgate Release/Passive Entry

A — Electronic Liftgate Release/Liftgate Passive Entry Location
B — Electronic Liftgate Lock/Liftgate Passive Lock Location

NOTE: If "Unlock All Doors 1st Press" is programmed in EVIC/DID, if equipped, only the liftgate will unlock when you push the Electronic Release. If "Unlock Driver Door 1st Press" is programmed in Uconnect, the liftgate will unlock when you push the electronic lock/unlock button on the liftgate. For further information, refer to "Uconnect SETTINGS" in "Multimedia."

Emergency Unlocking Driver Door

If the Remote Keyless Entry (RKE) transmitter battery is low or dead, the emergency key can be used to unlock the driver side door lock cylinder.

To release the emergency key, proceed as follows:

1. Slide the emergency key release button to the side.
2. Remove the emergency key from the Key Fob with Remote Control housing.

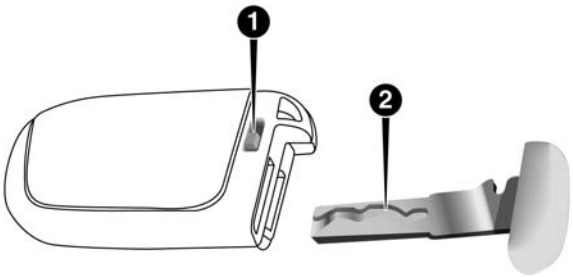

Emergency Key Release

1 — Emergency Key Release Button
2 — Emergency Key

NOTE: The Emergency Key can be inserted into the door lock cylinder from either direction.

WARNING!

- **Never leave children alone in a vehicle, or with access to an unlocked vehicle. Allowing children to be in a vehicle unattended is dangerous for a number of reasons. A child or others could be severely injured or killed. Children should be warned not to touch the parking brake, brake pedal, or the gear selector. Do not leave the Key Fob in or near the vehicle, or in a location accessible to children, and do not leave the ignition of a vehicle equipped with Keyless Enter- N-Go in the MAR/RUN mode. A child could start the vehicle, operate power windows, other controls, or move the vehicle.**
- **Do not leave children or animals inside parked vehicles in hot weather. Interior heat build-up may cause them to be severely injured or killed.**

General Information

The following regulatory statement applies to all radio frequency (RF) devices equipped in this vehicle:

This device complies with Part 15 of the FCC Rules and with Industry Canada licence-exempt RSS standard(s). Operation is subject to the following two conditions:

1. This device may not cause harmful interference, and
2. This device must accept any interference received, including interference that may cause undesired operation.

NOTE: Changes or modifications not expressly approved by the party responsible for compliance could void the user's authority to operate the equipment.

Child Locks

To provide a safer environment for small children riding in the rear seats, the rear doors are equipped with a Child-Protection Door Lock system.

To use the system, open each rear door, use a flat blade screwdriver (or ignition key) and rotate the dial to the LOCK or UNLOCK position. When the system on a door is engaged, that door can only be opened by using the outside door handle even if the inside door lock is in the unlocked position.

Child-Protection Door Lock Location

NOTE:

- When the child lock system is engaged, the door can only be opened by using the outside door handle even though the inside door lock is in the unlocked position.
- After disengaging the Child-Protection Door Lock system, always test the door from the inside to make certain it is in the desired position.
- After engaging the Child-Protection Door Lock system, always test the door from the inside to make certain it is in the desired position.
- For emergency exit with the system engaged, rotate the lock button to the unlocked position, roll down the window, and open the door with the outside door handle.

WARNING!

Avoid trapping anyone in a vehicle in a collision. Remember that the rear doors can only be opened from the outside when the Child-Protection locks are engaged.

SEATS

Seats are a part of the Occupant Restraint System of the vehicle.

WARNING!

- **It is dangerous to ride in a cargo area, inside or outside of a vehicle. In a collision, people riding in these areas are more likely to be seriously injured or killed.**

(Continued)

WARNING! *(Continued)*

- **Do not allow people to ride in any area of your vehicle that is not equipped with seats and seat belts. In a collision, people riding in these areas are more likely to be seriously injured or killed.**
- **Be sure everyone in your vehicle is in a seat and using a seat belt properly.**

Manual Front Seats

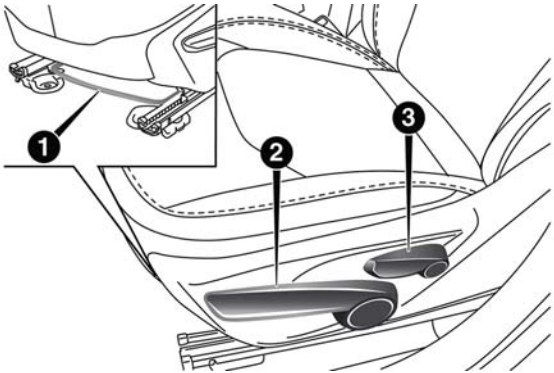

Manual Seat Adjustment Levers

1 — Forward/Rearward Adjustment Bar
2 — Seat Height Adjustment Lever
3 — Recline Lever

Manual Front Seat Forward/Rearward Adjustment

On models equipped with manual seats, the adjusting bar is located at the front of the seats, near the floor.

While sitting in the seat, lift up on the bar and move the seat forward or rearward. Release the bar once you have reached the desired position. Then, using body pressure, move forward and rearward on the seat to be sure that the seat adjusters have latched.

WARNING!

- **Adjusting a seat while the vehicle is moving is dangerous. The sudden movement of the seat could cause you to lose control. The seat belt might not be adjusted properly and you could be injured. Adjust the seat only while the vehicle is parked.**

(Continued)

WARNING! *(Continued)*

- **Do not ride with the seatback reclined so that the shoulder belt is no longer resting against your chest. In a collision you could slide under the seat belt and be seriously or even fatally injured. Use the recliner only when the vehicle is parked.**

Height Adjustment

The driver's seat height can be raised or lowered by using a lever, located on the outboard side of the seat. Pull upward on the lever to raise the seat height or push downward on the lever to lower the seat height.

Recline Adjustment

To adjust the seatback, lift the lever located on the outboard side of the seat, lean back to the desired position and release the lever. To return the seatback, lift the lever, lean forward and release the lever.

Power Adjustment (Front) — If Equipped

The power seat controls are located on the outboard side of the seat, close to the floor.

Use the switch to move the seat up/down, forward/rearward, tilt if equipped and to set the angle of the seatback.

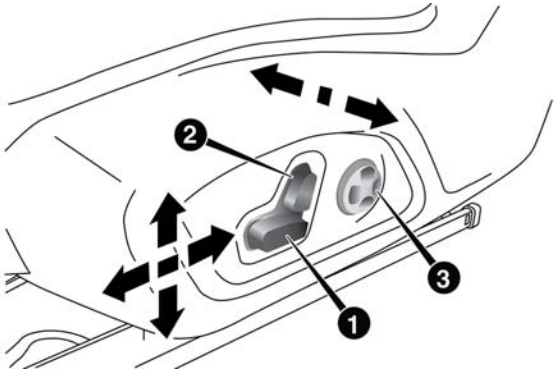

Power Seat Switches

1 — Power Seat Switch
2 — Power Recline Switch
3 — Power Lumbar Switch

Forward Or Rearward Adjustment

The seat can be adjusted both forward and rearward. Push the seat switch forward or rearward, the seat will move in the direction of the switch. Release the switch when the desired position has been reached.

Height Adjustment

The height of the seats can be adjusted up or down. Pull upward or push downward on the seat switch, the seat will move in the direction of the switch. Release the switch when the desired position is reached.

Recline Adjustment

Push the seat recliner switch forward or rearward, the seatback will move in the direction of the switch. Release the switch when the desired position has been reached.

Tilt Adjustment

The angle of the seat cushion can be adjusted up or down. Pull upward or push downward on the front of the seat switch, the front of the seat cushion will move in the direction of the switch.

Power Lumbar Adjustment

Push the switch forward or rearward to increase or decrease the lumbar support. Push the switch upward or downward to raise or lower the lumbar support.

Heated Seats — If Equipped

The heated seat switches are located on the instrument panel.

You can choose between two heating levels:

- Push the heated seat button once to turn the HI setting ON.
- Push the heated seat button a second time to turn the LO setting ON.
- Push the heated seat button a third time to turn the heating elements OFF.

If the HI-level setting is selected, the system will automatically switch to LO-level after approximately 145 minutes of continuous operation. At that time, the display will change from HI to LO, indicating the change. The LO-level setting will turn OFF automatically after approximately 60 minutes.

NOTE: The engine must be running for the heated seats to operate.

Vehicles Equipped With Remote Start

Vehicles equipped with Remote Start, the heated seats can be programed to come on during a Remote Start.

This feature can be programmed through the Uconnect system. Refer to “Uconnect Settings” in “Multimedia” for further information.

Auto Comfort Systems — If Equipped

Vehicles equipped with Auto on Comfort, turning on the car the driver’s heated seat will automatically turn ON when temperatures are below 40° F (4.4° C).

WARNING!

- **Persons who are unable to feel pain to the skin because of advanced age, chronic illness, diabetes, spinal cord injury, medication, alcohol use, exhaustion or other physical condition must exercise care when using the seat heater. It may cause burns even at low temperatures, especially if used for long periods of time.**
- **Do not place anything on the seat or seatback that insulates against heat, such as a blanket or cushion. This may cause the seat heater to overheat. Sitting in a seat that has been overheated could cause serious burns due to the increased surface temperature of the seat.**

Rear Seats

The split rear seat has the ability to fold flat which increases the storage of the rear cargo area.

NOTE:

- Prior to folding the rear seat down, it may be necessary to position the front seat to its mid-track position. Be sure that the front seats are fully upright and positioned forward, this will allow the rear seat to fold down easily.
- Prior to folding the rear seat, you must secure the rear armrest in up position.

WARNING!

- **It is extremely dangerous to ride in a cargo area, inside or outside of a vehicle. In a collision, people riding in these areas are more likely to be seriously injured or killed.**
- **Do not allow people to ride in any area of your vehicle that is not equipped with seats and seat belts.**
- **Be sure everyone in your vehicle is in a seat and using a seat belt properly.**

Removing Shelf — If Equipped

Proceed as follows:

1. Disconnect the two links that support the shelf at the eyelets.

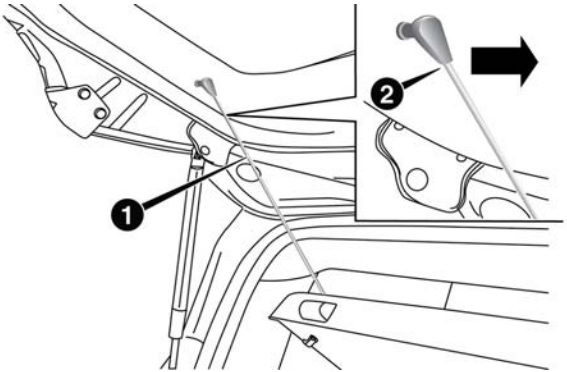

Rear Shelf Support Links

1 — Links
2 — Eyelets

2. Lift the rear part of the overhead luggage shelf.
3. Clear the pins placed outside of the shelf, and then remove the rear shelf pulling it upwards.

4. The rear shelf can be stored in the cargo area, or behind the front seatbacks.

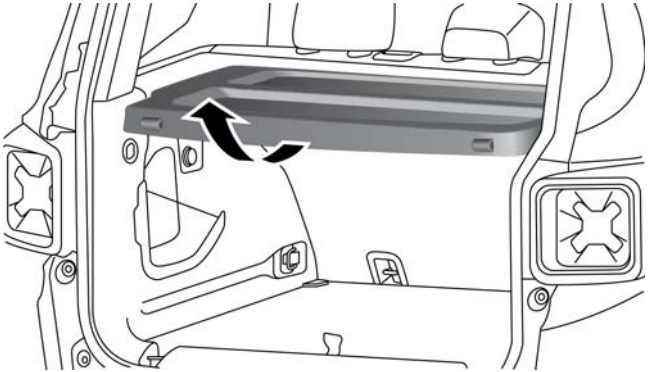

Adjusting The Rear Shelf

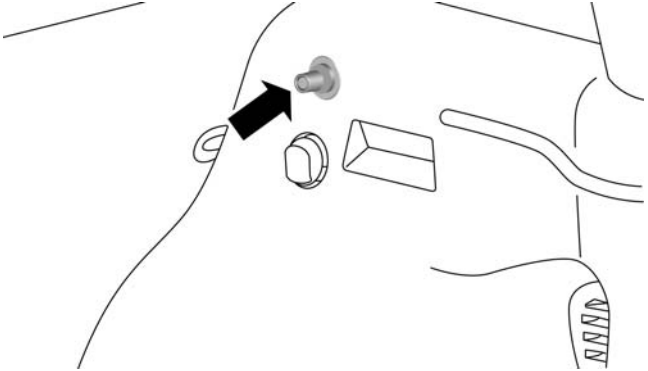

Rear Shelf Pin

Partial Enlargement Of Cargo Area

Enlargement of the left side of the cargo area allows you to carry a single passenger on the right side of the rear seat, while the enlargement of the right side allows you to carry two passengers.

Proceed as follows:

1. Remove the rear shelf (if equipped).
2. Fully lower the rear seat head restraints.
3. Move the safety belts to the outboard side of the seat and rest them on the seat belt guide.
4. Pull the seatback release lever to fold the left or right rear seatback completely forward.

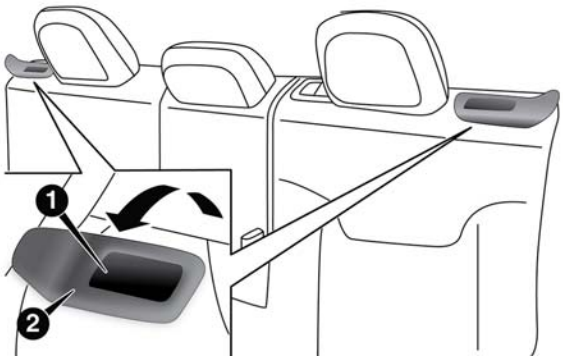

Rear Seat Release

1 — Seatback Release Lever
2 — Seat Belt Guide

Cargo Area Enlargement

Folding both sides of the rear seat provides additional storage in the rear cargo area.

Proceed as follows:

1. Fully lower the rear seat head restraints.
2. Move the safety belts to the outboard side of the seat.
3. Pull the seatback release lever to fold both sides of the rear seatbacks completely forward.

Seatback Repositioning

NOTE: If interference from the cargo area prevents the seatback from fully locking, you will have difficulty returning the seat to its proper position.

1. Move the safety belts to the seat belt guides on the top edge of the seat to ensure the seatbacks properly latch.
2. Lift the seatbacks, pushing them back until they lock on both the latches. Verify the red notches are no longer visible on the release lever. If the red notches are visible, the seatback is not secure.

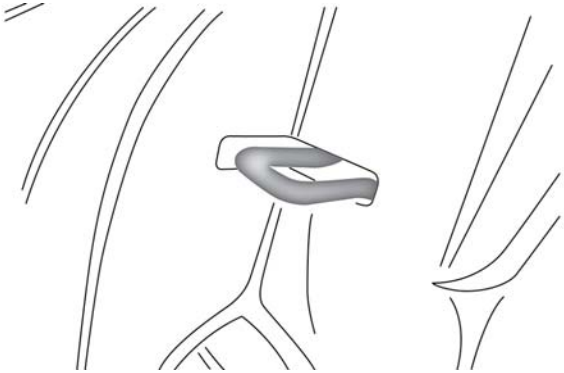

Rear Seat Latch

Unfolding The Rear Armrest 40/20/40

Tilt the head restraint forward and pull the rear armrest tab to release it from the seat and pull forward.

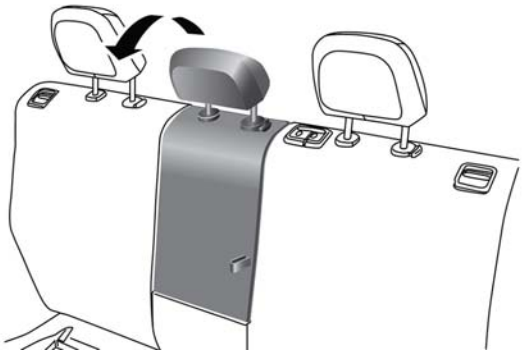

Rear Seat Center Armrest — If Equipped

The center part of the rear seat can also be used as rear armrest with cupholders.

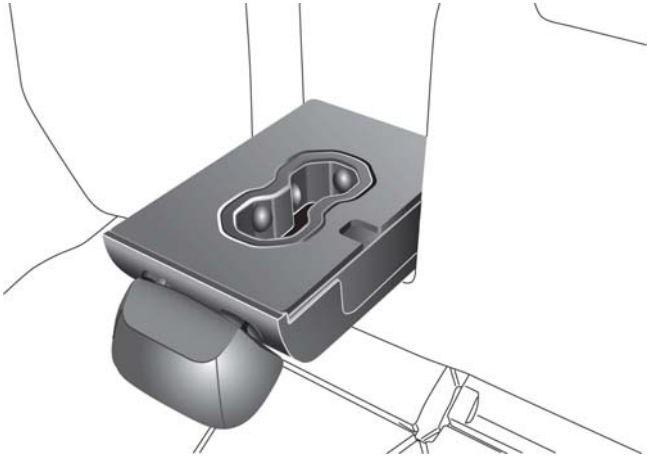

Rear Armrest

WARNING!

Be certain that the seatback is securely locked into position. If the seatback is not securely locked into position the seat will not provide the proper stability for child seats and/or passengers. An improperly latched seat could cause serious injury.

HEAD RESTRAINTS

Head restraints are designed to reduce the risk of injury by restricting head movement in the event of a rear impact. Head restraints should be adjusted so that the top of the head restraint is located above the top of your ear.

WARNING!

The head restraints for all occupants must be properly adjusted prior to operating the vehicle or occupying a seat. Head restraints should never be adjusted while the vehicle is in motion. Driving a vehicle with the head restraints improperly adjusted or removed could cause serious injury or death in the event of a collision.

Front Head Restraints

Your vehicle is equipped with front driver and passenger head restraints.

To raise the head restraint, pull upward on the head restraint. To lower the head restraint, push the adjustment button, located at the base of the head restraint, and push downward on the head restraint.

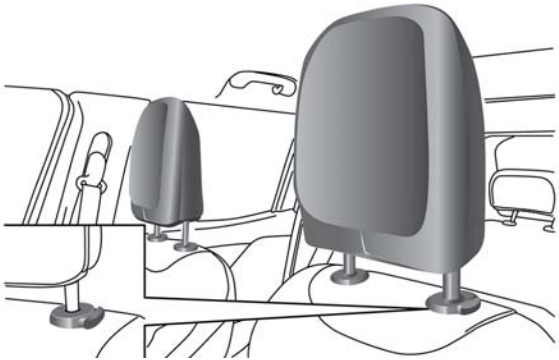

Head Restraint Adjustment Button

NOTE: The head restraints should only be removed by qualified technicians, for service purposes only. If either of the head restraints require removal, see your authorized dealer.

WARNING!

The head restraints for all occupants must be properly adjusted prior to operating the vehicle or occupying a seat. Head restraints should never be adjusted while the vehicle is in motion. Driving a vehicle with the head restraints improperly adjusted or removed could cause serious injury or death in the event of a collision.

Rear Head Restraints

Your vehicle is equipped with 2 outboard head restraints and 1 center head restraint for its rear passengers. The rear head restraints can be raised or lowered. When the center seat is being occupied, the head restraint should be in the raised position. When there are no occupants in the center seat, the head restraint can be lowered for maximum visibility for the driver.

To raise the head restraint, pull upward on the head restraint.

To lower the head restraint, push the adjustment button, located at the base of the head restraint, and push downward on the head restraint.

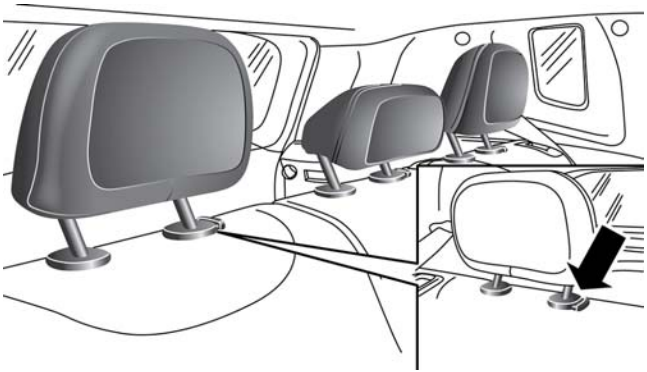

Adjustment Button

NOTE: The head restraints should only be removed by qualified technicians, for service purposes only. If either of the head restraints require removal, see your authorized dealer.

STEERING WHEEL

Tilt/Telescoping Steering Column

This feature allows you to tilt the steering column upward or downward. It also allows you to lengthen or shorten the steering column. The tilt/telescoping lever is located below the steering wheel at the end of the steering column.

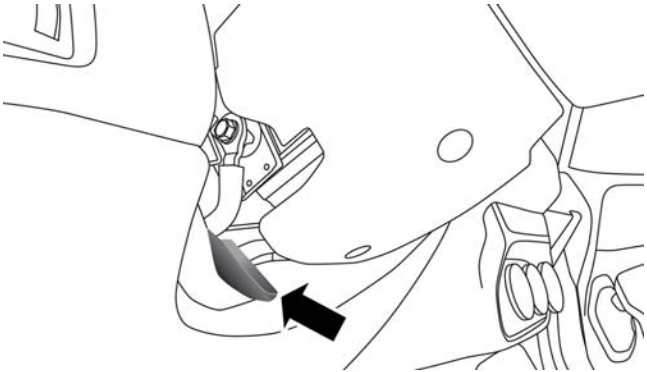

Tilt Steering Wheel Lever

To unlock the steering column, push the tilt/telescoping lever downward (toward the floor). To tilt the steering column, move the steering wheel upward or downward as desired. To lengthen or shorten the steering column, pull the steering wheel outward or push it inward as desired.

To lock the steering column in position, pull the tilt/telescoping lever upward until fully engaged.

WARNING!

Do not adjust the steering column while driving. Adjusting the steering column while driving or driving with the steering column unlocked, could cause the driver to lose control of the vehicle. Failure to follow this warning may result in serious injury or death.

Heated Steering Wheel — If Equipped

The steering wheel contains a heating element that helps warm your hands in cold weather. The heated steering wheel has only one temperature setting. Once the heated steering wheel switch has been turned on, it will operate for up to 100 minutes before automatically shutting off. The heated steering wheel can shut off early or may not turn on when the steering wheel is already warm. The heated steering wheel control button is located on the center of the instrument panel below the radio screen.

Auto Comfort Systems — If Equipped

Vehicles equipped with Auto on Comfort, turning on the car the heated steering wheel will automatically turn ON when temperatures are below 40° F (4.4° C).

WARNING!

- **Persons who are unable to feel pain to the skin because of advanced age, chronic illness, diabetes, spinal cord injury, medication, alcohol use, exhaustion, or other physical conditions must exercise care when using the steering wheel heater. It may cause burns even at low temperatures, especially if used for long periods.**

(Continued)

WARNING! *(Continued)*

- **Do not place anything on the steering wheel that insulates against heat, such as a blanket or steering wheel covers of any type and material. This may cause the steering wheel heater to overheat.**

MIRRORS

Inside Day/Night Mirror

The mirror can be adjusted up, down, left, and right. The mirror should be adjusted to center on the view through the rear window. Headlight glare from vehicles behind you can be reduced by moving the lever under the mirror to the night position (toward the rear of the vehicle). The mirror should be adjusted while the lever under the mirror is set in the day position (toward the windshield).

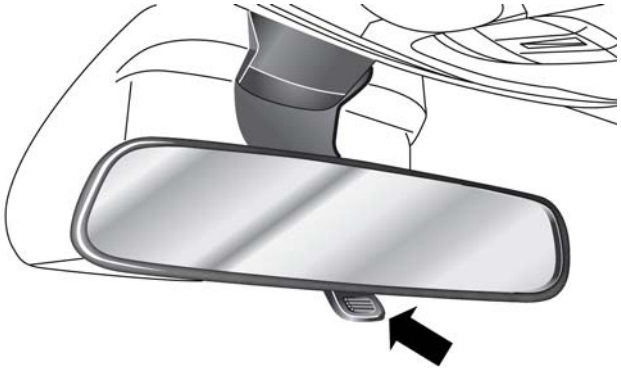

Mirror Adjustment

NOTE: The mirror will automatically release in the event of heavy contact with a passenger.

Auto Dimming Mirror — If Equipped

This mirror automatically adjusts for headlight glare from vehicles behind you. You can turn the feature on or off by pushing the button at the base of the mirror. A light to the left of the button will illuminate to indicate when the dimming feature is activated. The sensor to the right of the button does not illuminate.

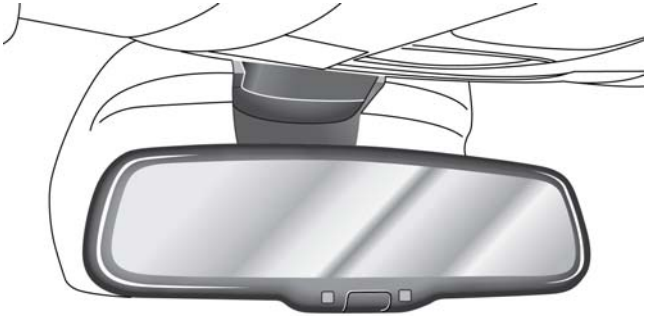

Dimming Mirror

NOTE: This feature is disabled when the vehicle is moving in reverse.

Outside Mirrors

Power Adjustment Mirrors — If Equipped

The power mirror switch is located on the drivers door panel.

To adjust the mirror, push the mirror adjustment switch in the four directions indicated by arrows.

NOTE:

- To adjust the power mirrors, the ignition must be in the MAR/RUN position.
- Once the mirror is adjusted, rotate the control to the neutral position to avoid accidental movements.

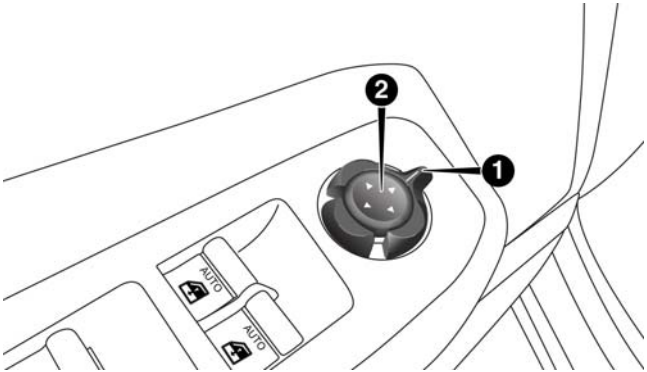

Power Mirror Switch

1 — Mirror Selector Switch
2 — Mirror Adjustment Switch

Manual Adjustment Mirrors — If Equipped

To adjust the exterior mirrors, push the corners of the mirrors till desired alignment is obtained.

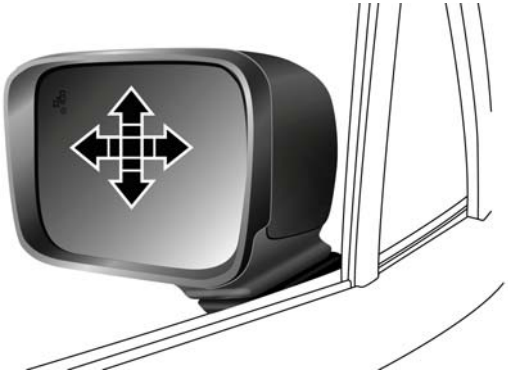

Manual Adjustment Mirror

Folding Mirror

The exterior mirrors are hinged to allow the mirror to pivot forward or rearward to help avoid damage. The mirror has three detent positions: full forward, normal and full rearward.

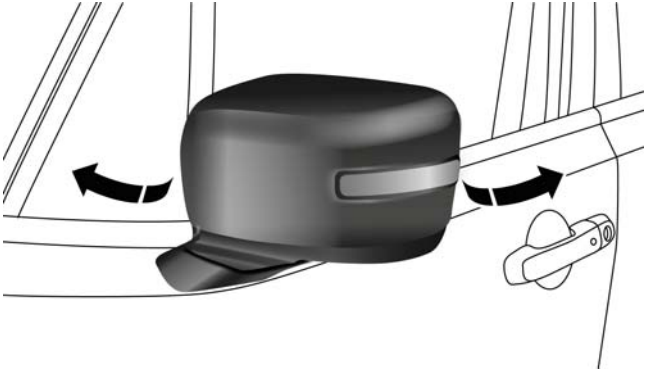

Folding Exterior Mirror

Heated Mirrors — If Equipped

These mirrors are heated to melt frost or ice. This feature can be activated whenever you turn on the Rear Window Defroster.

BLIND SPOT MONITORING (BSM) — IF EQUIPPED

The Blind Spot Monitoring (BSM) system uses two radar-based sensors, located inside the rear bumper fascia, to detect highway licensable vehicles (automobiles, trucks, motorcycles, etc.) that enter the blind spot zones from the rear/front/side of the vehicle.

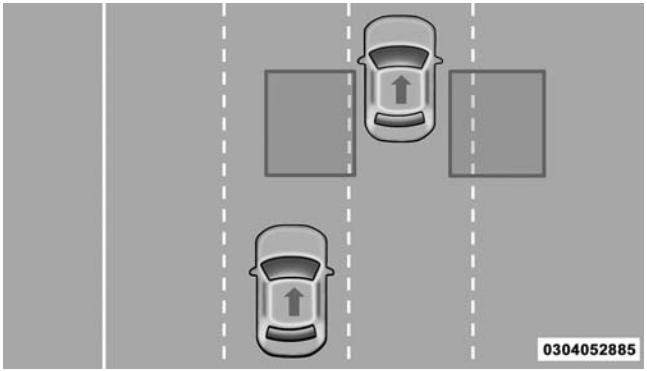

Rear Detection Zones

When the vehicle is started, the BSM warning light will momentarily illuminate in both outside rear view mirrors to let the driver know that the system is operational. The BSM system sensors operate when the vehicle is in any forward gear or REVERSE and enters stand-by mode when the vehicle is in PARK.

The BSM detection zone covers approximately one lane width on both sides of the vehicle, 10 ft (3 m). The zone length starts at the outside mirror and extends approximately 20 ft (6 m) beyond the rear bumper of the vehicle. The BSM system monitors the detection zones on both sides of the vehicle when the vehicle speed reaches approximately 6 mph (10 km/h) or higher and will alert the driver of vehicles in these areas.

NOTE:

- The BSM system does NOT alert the driver about rapidly approaching vehicles that are outside the detection zones.
- If a trailer is connected to the vehicle, it is necessary to deactivate BSM system manually by settings menu to avoid a misdetection. Refer to “Uconnect Settings” in “Multimedia” for further information.

The area on the rear fascia where the radar sensors are located must remain free of snow, ice, and dirt/road contamination so that the BSM system can function properly. Do not block the radar sensors located on the rear fascia with foreign objects (bumper stickers, bicycle racks, etc.).

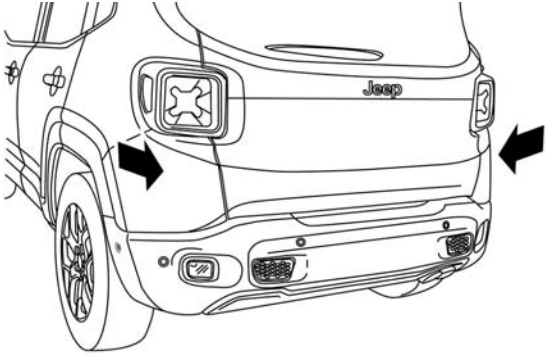

Rear Sensor Locations

The BSM system notifies the driver of objects in the detection zones by illuminating the BSM warning light located in the outside mirrors in addition to sounding an audible (chime) alert and reducing the radio volume. Refer to “Modes Of Operation” for further information.

BSM Warning Light

The BSM system monitors the detection zone from three different entry points (side, rear, front) while driving to see if an alert is necessary. The BSM system will issue an alert during these types of zone entries.

Entering From The Side

Vehicles that move into your adjacent lanes from either side of the vehicle.

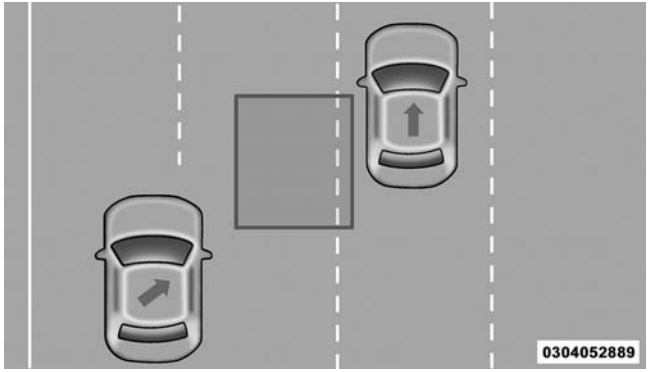

Side Monitoring

Entering From The Rear

Vehicles that come up from behind your vehicle on either side and enter the rear detection zone with a relative speed of less than 31 mph (50 km/h).

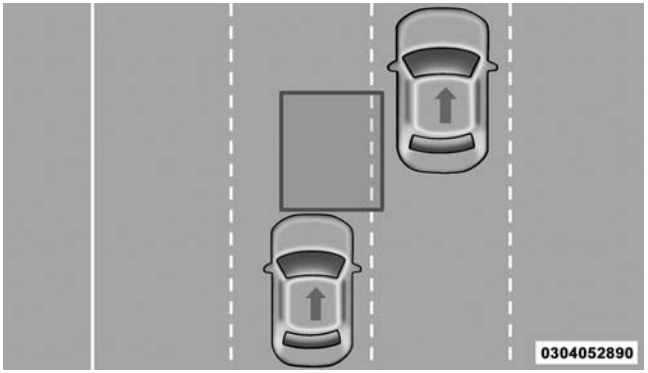

Rear Monitoring

Overtaking Traffic

If you pass another vehicle slowly with a relative speed less than 15 mph (25 km/h) and the vehicle remains in the blind spot for approximately 1.5 seconds, the warning light will be illuminated. If the difference in speed between the two vehicles is greater than 15 mph (25 km/h), the warning light will not illuminate.

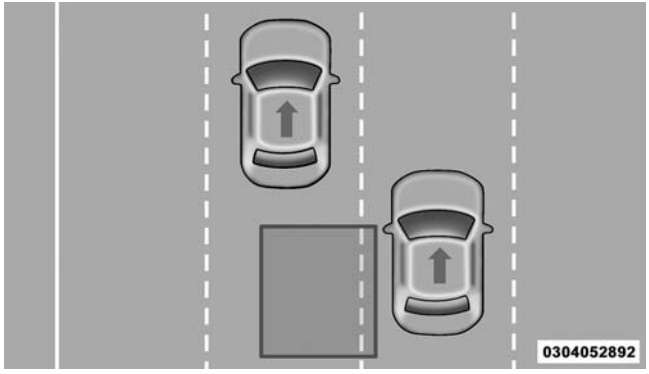

Overtaking/Approaching

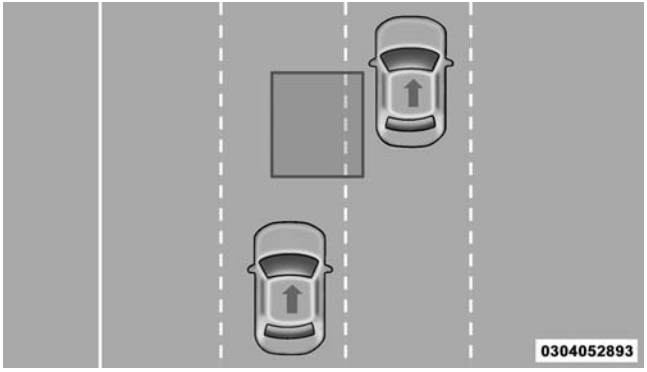

Overtaking/Passing

The BSM system is designed not to issue an alert on stationary objects such as guardrails, posts, walls, foliage, berms, etc. However, occasionally the system may alert on such objects. This is normal operation and your vehicle does not require service.

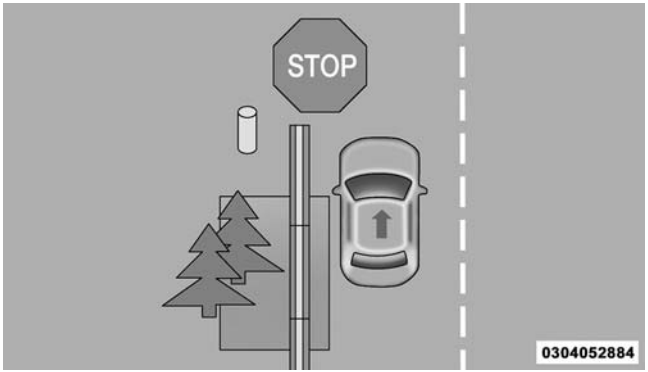

Stationary Objects

The BSM system will not alert you of objects that are traveling in the opposite direction of the vehicle in adjacent lanes.

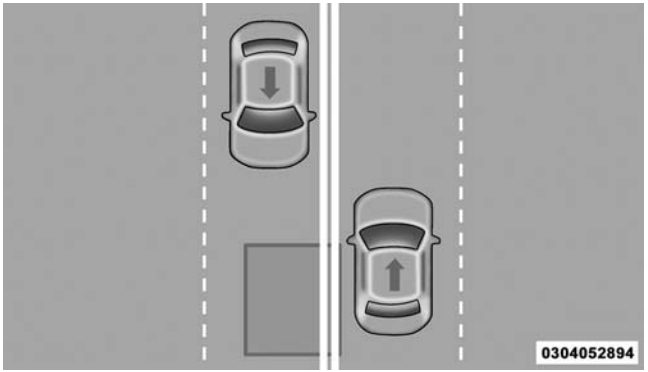

Opposing Traffic

WARNING!

The Blind Spot Monitoring system is only an aid to help detect objects in the blind spot zones. The BSM system is not designed to detect pedestrians, bicyclists, or animals. Even if your vehicle is equipped with the BSM system, always check your vehicles mirrors, glance over your shoulder, and use your turn signal before changing lanes. Failure to do so can result in serious injury or death.

Rear Cross Path (RCP)

The Rear Cross Path (RCP) feature is intended to aid the driver when backing out of parking spaces where their vision of oncoming vehicles may be blocked. Proceed slowly and cautiously out of the parking space until the rear end of the vehicle is exposed. The RCP system will then have a clear view of the cross traffic and if an oncoming vehicle is detected, alert the driver.

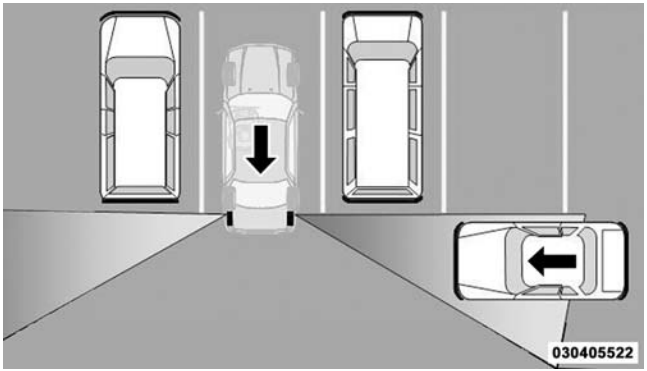

RCP Detection Zones

RCP monitors the rear detection zones on both sides of the vehicle, for objects that are moving toward the side of the vehicle with a minimum speed of approximately 1 mph (2 km/h), to objects moving a maximum of approximately 22 mph (35 km/h), such as in parking lot situations.

NOTE: In a parking lot situation, oncoming vehicles can be obscured by vehicles parked on either side. If the sensors are blocked by other structures or vehicles, the system will not be able to alert the driver.

When RCP is on and the vehicle is in REVERSE, the driver is alerted using both the visual and audible alarms, including reducing the radio volume.

WARNING!

RCP is not a Back Up Aid system. It is intended to be used to help a driver detect an oncoming vehicle in a parking lot situation. Drivers must be careful when backing up, even when using RCP. Always check carefully behind your vehicle, look behind you, and be sure to check for pedestrians, animals, other vehicles, obstructions, and blind spots before backing up. Failure to do so can result in serious injury or death.

Mode Of Operation

Three selectable modes of operation are available in the Uconnect System. Refer to "Uconnect Settings" in "Multimedia" for further information.

Blind Spot Alert Lights Only

When operating in Blind Spot Alert mode, the BSM system will provide a visual alert in the appropriate side view mirror based on a detected object. However, when the system is operating in Rear Cross Path (RCP) mode, the system will respond with both visual and audible alerts when a detected object is present. Whenever an audible alert is requested, the radio is muted.

Blind Spot Alert Lights/Chime

When operating in Blind Spot Alert Lights/Chime mode, the BSM system will provide a visual alert in the appropriate side view mirror based on a detected object. If the turn signal is then activated, and it corresponds to an

alert present on that side of the vehicle, an audible chime will also be sounded. Whenever a turn signal and detected object are present on the same side at the same time, both the visual and audible alerts will be issued. In addition to the audible alert, the radio (if on) will also be muted.

NOTE: Whenever an audible alert is requested by the BSM system, the radio is also muted.

When the system is in RCP, the system will respond with both visual and audible alerts when a detected object is present. Whenever an audible alert is requested, the radio is also muted. Turn/hazard signal status is ignored; the RCP state always requests the chime.

Blind Spot Alert Off

When the BSM system is turned off, there will be no visual or audible alerts from either the BSM or RCP systems.

NOTE: The BSM system will store the current operating mode when the vehicle is shut off. Each time the vehicle is started the previously stored mode will be recalled and used.

Blind Spot Monitoring Fault Warnings

Sensor Blinded

In the case of a sensor blinded:

- BSM Mirror Warning Lights are turned on continuously.
- A instrument cluster message will display **"Blind Spot Monitoring Unavailable - Wipe Rear Bumper Corners."**

NOTE: The rear bumper must be clean and free of any obstructing debris.

System Not Available

In the case of the system being temporary unavailable:

- BSM Mirror Warning Lights are turned on continuously.
- A instrument cluster message will display **"Blind Spot Monitoring Temporary Unavailable."**

In the case of the system being completely unavailable:

- A chime will turn on.
- A instrument cluster message will display **"Blind Spot Monitoring Unavailable - Service Required."**

NOTE: Vehicle must be taken to the nearest authorized dealer for service.

General Information

This vehicle has systems that operate on radio frequency that comply with Part 15 of the Federal Communications Commission (FCC) rules and with Industry Canada Standards RSS- GEN/210/220/310.

Operation is subject to the following two conditions:

1. The device may not cause harmful interference.
2. The device must accept any interference received, including interference that may cause undesired operation of the device.

Changes or modifications to any of these systems by other than an authorized service facility could void authorization to use this equipment.

EXTERIOR LIGHTS

Headlights

The headlight switch is located on the left side of the instrument panel. The headlight switch controls the operation of the headlights, side marker lights, daytime running lights, fog lights and the dimming of the instrument cluster and interior lighting.

Headlight Switch

Turning on the headlights will illuminate the instrument cluster and the controls located on the instrument panel.

Automatic Lighting — If Equipped

Light Sensor

The light sensor is equipped with an infrared LED, located on the windshield. It detects changes in light intensity outside the vehicle, based on the sensitivity of light set by using the Menu on the display or on the Uconnect system.

The higher the sensitivity, the lesser the amount of external light required for controlling the lighting.

Automatic Headlights

Turn the headlight switch to the AUTO position.

When the automatic headlights are enabled, the headlight time delay is active. After the ignition switch is placed in the STOP/OFF position, the headlights will automatically turn off after the time is set by Uconnect Settings.

The timing of the headlights is adjustable between 0, 30, 60 and 90 seconds. Refer to "Uconnect Settings" in "Multimedia" for further information.

NOTE: The engine must be running before the headlights will come on in the automatic mode.

Daytime Running Lights (DRL) — If Equipped

The Daytime Running Lights (DRLs) will turn on when the engine is started and remain on unless the headlights are turned on or the engine is shut off.

The DRLs will be disabled during turn signal operation and resume operation when the turn signal operation has ended.

Front Fog Lights — If Equipped

The front fog light switch is built into the headlight switch.

To activate the front fog lights, turn on the parking lights or the low beam headlights and push the fog light button on the headlight switch. To turn off the front fog lights, push the fog light button on the headlight switch a second time or turn off the headlight switch.

An indicator light in the instrument cluster illuminates when the fog lights are turned on.

NOTE: The fog lights will operate with the low beam headlights or parking lights on. Selecting the high beam headlights will turn off the fog lights.

Parking Lights

Rotate the headlight switch to the parking position to turn on the parking lights. The parking light indicator in the cluster will illuminate.

Headlight Delay

This feature provides the safety of headlight illumination for up to 90 seconds when leaving your vehicle in an unlit area.

The time delay of the headlights is programmable between 0, 30, 60 and 90 seconds. Refer to “Uconnect Settings” in “Multimedia” for further information.

Headlight Delay Activation

To activate the delay feature, place the ignition in the STOP/OFF position while the headlights are still on. Then, turn off the headlights within two minutes. The delay interval begins when the headlight switch is turned off from the "Lowbeam" position.

If the headlight switch is in "Auto" position and headlights were on before Key OFF, the delay interval begins automatically.

Headlight Delay Disable

The feature is disabled by turning on the headlights, the parking lights or by placing the ignition in the MAR/RUN position.

If you shut off the lights before the ignition is turned on, they will turn off in the normal manner.

NOTE: The lights must be turned off within two minutes of placing the ignition in the STOP/OFF position to activate this feature.

Flash-To-Pass

You can signal another vehicle with your headlights by lightly pulling the multifunction lever toward you. This will cause the headlights to turn on at high beam and remain on until the lever is released.

High Beams

To turn on the high beam headlights, push the turn signal lever forward (toward the front of the vehicle) and an indicator will illuminate in the cluster. To turn off the high beams, pull the turn signal lever rearward (toward the rear of the vehicle).

High Beam And Turn Signal Controls

NOTE: The headlights must be on for the high beams to activate.

Turn Signals

Move the multifunction lever up or down and the arrows on each side of the instrument cluster flash to show proper operation of the front and rear turn signal lights.

NOTE: When the Daytime Running Lights are on and a turn signal is activated, the Daytime Running Lamp will turn off on the side of the vehicle in which the turn signal is flashing. The Daytime Running Lamp will turn back on when the turn signal is turned off.

INTERIOR LIGHTS

Front Lights

The courtesy light switches is used to turn the courtesy lights On/Off.

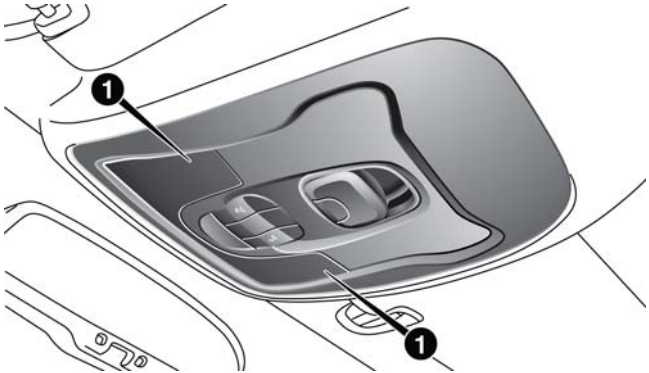

Courtesy Lights

1 — Drivers Courtesy Lights

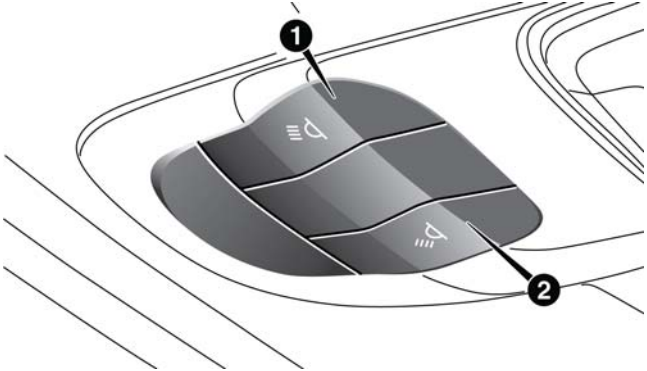

Courtesy Light Switches

1— Left Switch
2— Right Switch

To operate the courtesy lights, push either the drivers or passenger light switch.

NOTE:

- Before exiting the vehicle, make sure that the interior lights are turned off. This will prevent the battery from discharging once the doors are closed.
- If a light is left on it will automatically be turned off after approximately 15 minutes after the ignition is in the STOP/OFF position.

Rear Lights

Push the button on the rear dome light once to turn the light On, the light will remain On at all times. Push the button a second time to turn the light Off, the lights will remain Off at all times.

Rear Dome Light

Vehicles With Retractable Roof

For vehicles equipped with a retractable roof, there are two interior lights located above the grab handles of the rear doors.

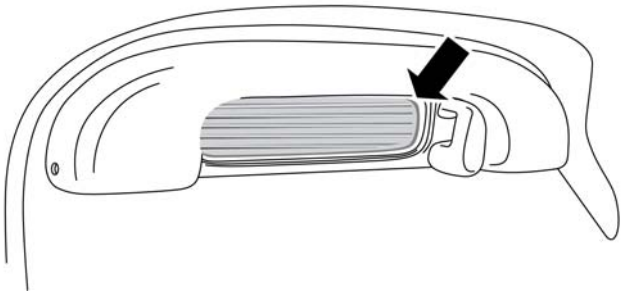

Rear Interior Light

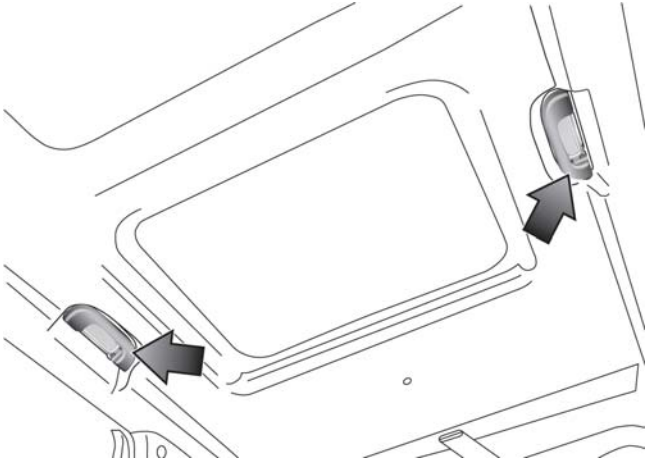

Interior Light Locations

The lights come on by opening any of the doors.

Dome Light Timing

The Dome Light will automatically illuminate when the doors are unlocked, the doors are opened or after the doors are closed.

Timing Entering The Vehicle

The dome lights illuminate in the following ways:

- When the doors are unlocked, the dome light will illuminate for approximately 27 seconds.
- When one of the doors is opened, the dome light will illuminate for approximately three minutes.
- When the doors are closed, the dome light will automatically shut off after approximately 10 seconds.

The timing stops once the ignition is placed in the MAR/RUN or AVV/START position.

The dome light will turn off under any of the following conditions:

- The dome light is disabled when the ignition is placed in the MAR/RUN or AVV/START position.
- The dome lights will turn off automatically when the doors are locked.
- The dome lights will automatically turn off after approximately fifteen minutes of inactivity to preserve the battery.

Timing Exiting The Vehicle

The dome light will illuminate under the following conditions when the ignition is turned to the STOP/OFF position and the key is removed:

- The dome light will illuminate for 27 seconds after the key is removed from the ignition.

- The opening of one of the doors (approximately three minutes).
- After closing a door (approximately 27 seconds).

The dome light timing is disabled when the doors are locked.

Cargo Area Lights

Two interior lights are located in the cargo area on the side trim panels.

These lights automatically turn on/off when the liftgate is opened and closed, regardless of the position of the ignition.

Illuminated Vanity Mirrors — If Equipped

An illuminated vanity mirror is located on each sun visor. To use the mirror, rotate the sun visor down and swing the mirror cover upward. The lights will turn on automatically. Closing the mirror cover will turn the light off.

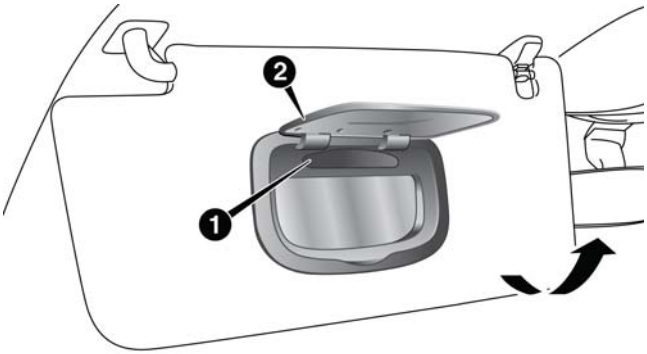

Vanity Mirror

1 — Mirror Light
2 — Mirror Cover

Interior Lights Dimmer Switch

Rotate the ambient dimmer control upward or downward to increase or decrease the brightness of the ambient light located in the overhead console, door handle lights, lower instrument panel lights, door map pocket lights, and cubby bin lights.

With the parking lights or headlights on, rotate the instrument panel dimmer control upward or downward to increase or decrease the brightness of the instrument panel. At the top detent of the instrument panel dimmer, all the interior lights will also illuminate. At the bottom most setting of the thumb wheel will turn all the interior lights to their lowest dimmable setting.

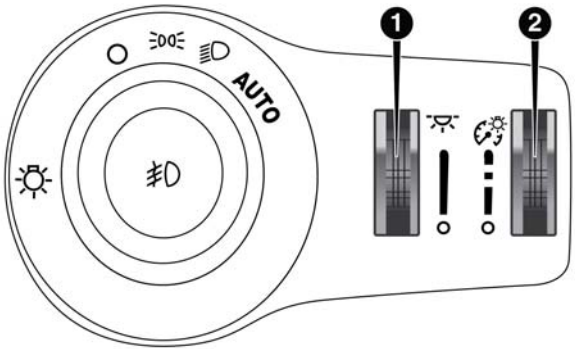

Headlight Switch

1 — Ambient Light Control
2 — Instrument Panel Dimmer

WIPERS AND WASHERS

The windshield wiper/washer controls are located on the lever on the right side of the steering column. The front wipers are operated by rotating a switch, located on the end of the lever.

Windshield Wiper Stalk

CAUTION!

Always remove any buildup of snow that prevents the windshield wiper blades from returning to the "park" position. If the windshield wiper switch is turned off, and the blades cannot return to the "park" position, damage to the wiper motor may occur.

Front Wiper Operation

Rotate the windshield wiper knob to one of the two detent positions for intermittent settings, the third detent for low wiper operation and the fourth for high wiper operation.

Windshield Washer Operation

To use the washer, pull the lever toward you and hold while spray is desired. If the lever is pulled while in the intermittent setting, the wipers will turn on and operate

for several wipe cycles after the lever is released, and then resume the intermittent interval previously selected.

If the lever is pulled while the wipers are in the off position, the wipers will operate for several wipe cycles, then turn off.

WARNING!

Sudden loss of visibility through the windshield could lead to a collision. You might not see other vehicles or other obstacles. To avoid sudden icing of the windshield during freezing weather, warm the windshield with the defroster before and during windshield washer use.

Mist

Use this feature when weather conditions make occasional usage of the wipers necessary. Push the lever upward to the Mist position and release for a single wiping cycle.

NOTE: The mist feature does not activate the washer pump; therefore, no washer fluid will be sprayed on the windshield. The wash function must be used in order to spray the windshield with washer fluid.

Rain Sensing Wipers — If Equipped

This feature senses moisture on the windshield and automatically activates the wipers for the driver. The feature is especially useful for road splash or overspray from the windshield washers of the vehicle ahead. Rotate the end of the multifunction lever to one of the two detent positions for intermittent settings, to activate this feature.

This function can be activated by the Uconnect Settings through the radio. Refer to "Uconnect Settings" in the "Multimedia" for further information.

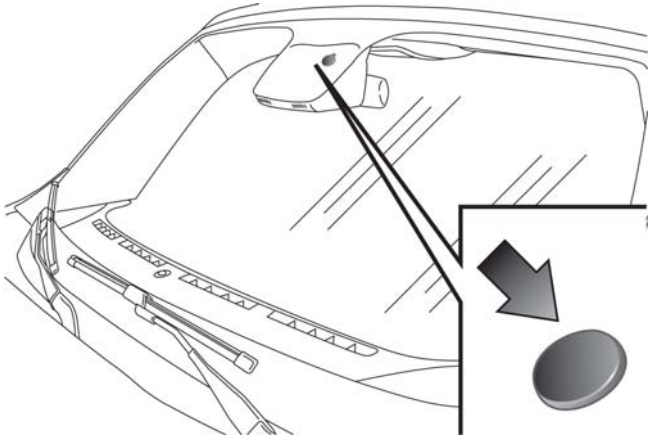

Rain Sensor

The sensitivity of the system can be adjusted with the multifunction lever. Wiper delay position one is the least sensitive, and wiper delay position two is the most sensitive. Place the wiper switch in the OFF position when not using the system.

Rain Sensing Wipers – Inhibition

When the user switches the ignition to STOP, leaving the lever in intermittent positions, no wipe cycle is performed for safety reasons. This temporary inhibition avoids accidental activations of the wiping (e.g during the hand washing of the windscreen, blocking the blades in ice/snow conditions). The user can activate the Rain Sensing Wipers in three ways:

- Moving the level in OFF position and then in Intermittent positions.
- One MIST command actuation.

- The vehicle speed exceeds 3 mph (5 km/h) and the rain sensor detects the presence of rain.

NOTE:

- The Rain Sensing feature will not operate when the wiper switch is in the low or high-speed position.
- The Rain Sensing feature may not function properly when ice, or dried salt water is present on the windshield.
- Use of Rain-X or products containing wax or silicone may reduce Rain Sensing performance.
- The Rain Sensing feature can be turned on and off using the Uconnect System, refer to “Uconnect Settings” in “Multimedia” for further information.

Rear Wiper Operation

The rear wiper/washer controls are located on the lever on the right side of the steering column. The rear wiper/washer is operated by rotating a switch, located at the middle of the lever.

Rotate the center portion of the lever upward to the first detent for intermittent operation and to the second detent for continuous rear wiper operation.

To use the washer, push the lever forward and hold while spray is desired. If the lever is pushed while in the intermittent setting, the wiper will turn on and operate for several wipe cycles after the end of the lever is released, and then resume the intermittent interval previously selected.

If the lever is pushed while the wiper is in the off position, the wiper will operate for several wipe cycles, then turn off.

NOTE: As a protective measure, the pump will stop if the switch is held for more than 30 seconds. Once the lever is released, the pump will resume normal operation.

If the rear wiper is operating when the ignition is turned to the STOP/OFF position, the wiper will automatically return to the "park" position.

Rear Window Defroster

The rear window defroster button is located with the Climate Controls on the instrument panel. Push this button to turn on the rear window defroster. An indicator in the button will illuminate when the rear window defroster is on. The rear window defroster automatically turns off after approximately 20 minutes. To manually shut the defroster off, push the button a second time.

CAUTION!

Failure to follow these cautions can cause damage to the heating elements:

- **Use care when washing the inside of the rear window. Do not use abrasive window cleaners on the interior surface of the window. Use a soft cloth and a mild washing solution, wiping parallel to the heating elements. Labels can be peeled off after soaking with warm water.**
- **Do not use scrapers, sharp instruments, or abrasive window cleaners on the interior surface of the window.**
- **Keep all objects a safe distance from the window.**

Windshield Wiper De-Icer — If Equipped

Your vehicle may be equipped with a Windshield Wiper De-Icer feature that may be activated under the following conditions:

- **Activation By Front Defrost** — The Windshield Wiper De-Icer will be activated automatically in the case of a cold weather manual start with full front defrost, and the ambient temperature is below 40° F (4.4° C).
- **Activation By Rear Defrost** — The Windshield Wiper De-Icer will be activated automatically when the rear defrost is turned on and the ambient temperature is below 40° F (4.4° C).
- **Activation By Remote Start Operation** — When Remote Start is active and the outside ambient temperature is less than 40° F (4.4° C), the Windshield Wiper De-Icer will be enabled. Upon exiting remote start mode the Windshield Wiper De-Icer will remain on.

Auto-On Rear Window Defroster/Windshield Wiper De-Icer— If Equipped

Turning On the car, the Rear Window Defroster and Windshield Wiper De-Icer will automatically turn ON when the outside ambient temperature is less than 40° F (4.4° C).

The Rear Window Defroster and Windshield Wiper De-Icer automatically turn off after approximately 20 minutes. To manually shut the defroster/windshield off, push the button a second time.

WINDOWS

Power Windows

The power window switch is located on the driver's door panel. The driver's power window switch controls the operation of all the windows.

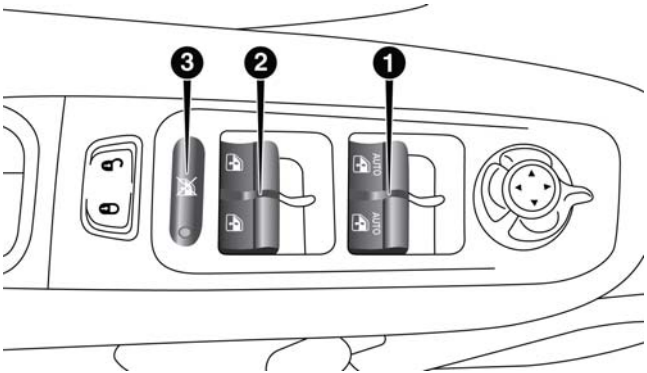

Power Window Switches

1 — Opening/Closing Left/Right Front Window
2 — Opening/Closing Left/Right Rear Window (If Equipped)
3 — Window Lockout Switch (Rear Doors)

There are single window controls on each passenger door trim panel, which operate the passenger door windows.

The window controls will operate only when the ignition is in the MAR/RUN or AVV/START position.

NOTE: For vehicles equipped with Uconnect, the power window switches will remain active for up to three minutes after the ignition is cycled to the STOP/OFF position. Opening either front door will cancel this feature. Refer to "Uconnect Settings" in "Multimedia" for further information.

WARNING!

Never leave children unattended in a vehicle, and do not let children play with power windows. Do not leave the Key Fob in or near the vehicle, or in a location accessible to children, and do not leave the ignition of a vehicle equipped with Keyless Enter-N-Go in the MAR/RUN mode. Occupants, particularly unattended children, can become entrapped by

(Continued)

WARNING! *(Continued)*

the windows while operating the power window switches. Such entrapment may result in serious injury or death.

Controls

AUTO-Down Feature — If Equipped

The driver and passenger power window switches have an AUTO-down feature. Push the switch for half a second and release it, the window will go down automatically.

To partially open the window, push the window switch and release it when you want the window to stop.

To stop the window from going all the way down during the AUTO-down operation, pull up on the switch briefly when the when the window has reached the desired position.

AUTO-Up Feature With Auto-Reverse Protection — If Equipped

Lift and hold the window switch for half a second, release, and the window will go up automatically.

To stop the window from going all the way up during the AUTO operation, push down on the switch briefly.

To partially close the window, lift the window switch and release it when you want the window to stop.

NOTE:

- If the window runs into any obstacle during auto-closure, it will reverse direction and then go back down. Remove the obstacle and use the window switch again to close the window.
- Any impact due to rough road conditions may trigger the auto-reverse function unexpectedly during auto-closure. If this happens, pull the switch lightly and hold to close the window manually.

WARNING!

There is no Auto-Reverse protection when the window is almost closed. Be sure to clear all objects from the window before closing.

Reset Auto-Up

Should the Auto Up feature stop working, the window probably needs to be reset. To reset Auto Up:

1. Pull the window switch up to close the window completely and continue to hold the switch up for an additional two seconds after the window is closed.

Wind Buffeting

Wind buffeting can be described as the perception of pressure on the ears or a helicopter-type sound in the ears. Your vehicle may exhibit wind buffeting with the windows down, or the sunroof in certain open or partially open positions. This is a normal occurrence and can be minimized. If the buffeting occurs with the rear windows open, open the front and rear windows together to minimize the buffeting. If the buffeting occurs with the sunroof open, adjust the sunroof opening to minimize the buffeting or open any window.

CLIMATE CONTROLS

Air Outlet And Diffuser Locations — Passenger Compartment

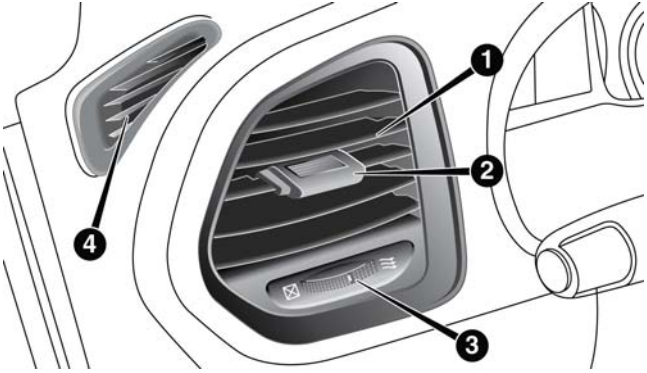

Left Side Air Outlets

1 — Adjustable Air Outlet
2 — Air Vane Adjustment
3 — Air Flow Outlet Adjustment
4 — Fixed Air Outlet

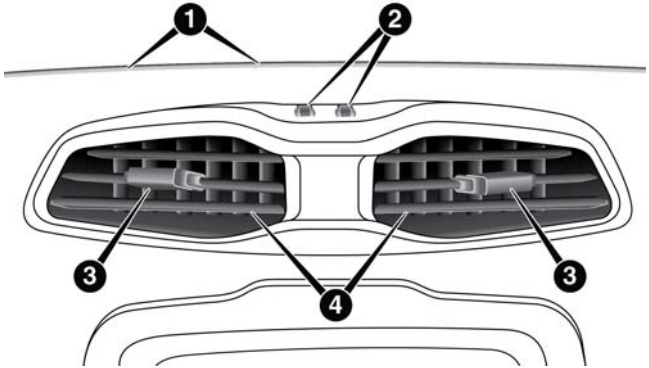

Center Air Outlets

1 — Fixed Air Outlet
2 — Air Flow Outlet Adjustment
3 — Air Vane Adjustment
4 — Adjustable Air Outlet

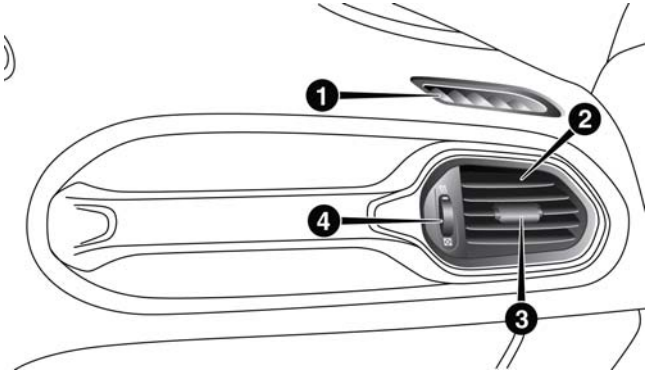

Right Side Air Outlets

1 — Fixed Air Outlet
2 — Adjustable Air Outlet
3 — Air Vane Adjustment
4 — Air Flow Outlet Adjustment

Manual Climate Controls — If Equipped

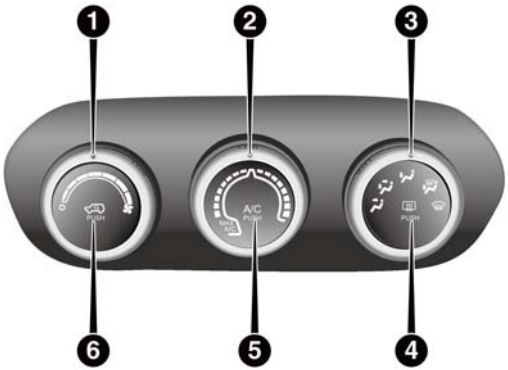

Manual Temperature Controls (MTC)

The Manual Climate Controls consist of a series of rotary dials with inner push buttons.

1. Blower Control

Rotate this control to regulate the amount of air forced through the ventilation system in any mode. The blower speed increases as you move the control clockwise from the "0" (OFF) position.

2. Temperature Control

Rotate this control to regulate the temperature of the air inside the passenger compartment. Rotating the dial counter-clockwise into the blue area of the scale indicates cooler temperatures, while rotating clockwise into the red area indicates warmer temperatures. Rotating the Temperature Control all the way counter-clockwise results in turning on the MAX A/C feature.

3. Mode Control

Rotate this control to change the system between Modes (Panel, Bi-Level, Floor, Mix, Defrost).

- ***Panel***

Air is directed through the outlets in the instrument panel. These outlets can be adjusted to direct airflow.

NOTE: The center instrument panel outlets can be adjusted so that they are directed toward the rear seat passengers for maximum airflow to the rear.

- ***Bi-Level***

Air is directed through the panel and floor outlets.

- ***Floor***

Air is directed through the floor outlets with a small amount flowing through the defrost and side window demister outlets.

- ***Mix***

Air is directed through the floor, defrost, and side window demister outlets. This setting works best in cold or snowy conditions that require extra heat to the windshield. This setting is good for maintaining comfort while reducing moisture on the windshield.

- ***Defrost***

Air is directed through the windshield and side window demister outlets. Use this mode with maximum blower and temperature settings for best windshield and side window defrosting.

NOTE: The air conditioning compressor operates in Mix or Defrost, even if the Air Conditioning (A/C) button is not pushed. This dehumidifies the air to help dry the windshield. To improve fuel economy, use these modes only when required.

4. Rear Defrost Button

Push and release the Rear Defrost Control button to turn ON the rear window defroster and the heated outside mirrors (if equipped). An indicator will illuminate when the rear window defroster is ON. The rear window defroster automatically turns OFF after 20 minutes.

5. A/C Button — If Equipped

Push this button to engage the Air Conditioning. A light will illuminate when the Air Conditioning system is engaged.

6. Recirculation Button

Push this control button to change the system between recirculation mode and outside air mode. Recirculation can be used when outside conditions such as smoke, odors, dust, or high humidity are present.

NOTE:

- Continuous use of the Recirculation mode may make the inside air stuffy and window fogging may occur. Extended use of this mode is not recommended.
- The use of the Recirculation mode in cold or damp weather could cause windows to fog on the inside, because of moisture buildup inside the vehicle. Select the outside air position for maximum defogging.
- Recirculation can be used in all modes except for Defrost.
- The A/C can be deselected manually without disturbing the mode control selection.

Rear Window Defrosting

Push and release the rear window defrost button to turn the function on/off.

Activation of this function is indicated by the rear defrost indicator light on the instrument panel turning on. The function is automatically deactivated after 20 minutes.

If equipped, push the rear defrost button to activate the defrosting of door mirrors and heated rear window.

CAUTION!

To avoid causing damage to the rear window defroster heating filaments do not affix stickers or other objects to the inside of the rear glass.

Air Recirculation

Push and release the Air Recirculation button so that the LED is on, to enter recirculation mode. It is recommended to turn the internal air recirculation on while standing in traffic or in tunnels to prevent the introduction of polluted air.

Do not use the function for a long period of time, particularly if there are many passengers in the vehicle, to prevent the windows from misting up.

NOTE: Internal air recirculation makes it possible to reach the required heating or cooling conditions quickly depending on the mode selected. Do not use the internal air recirculation function on rainy/cold days as it would considerably increase the possibility of the windows misting.

System Maintenance

In Winter, the Climate Control system must be turned on at least once a month for approximately 10 minutes.

Have the system inspected at an authorized dealership before the summer.

NOTE: The system uses R-1234yf (refrigerant) which does not pollute the environment in the event of accidental leakage. Under no circumstances is the use of R-134a (refrigerant) allowed.

Automatic Climate Controls — If Equipped

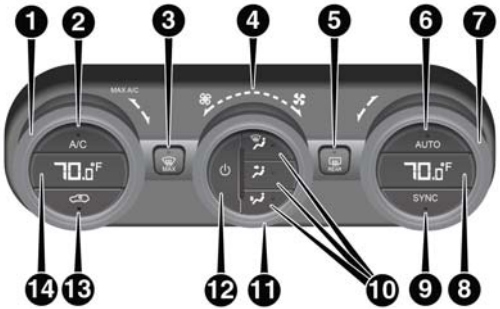

Automatic Climate Controls

1. Driver Temperature Control

Provides the driver with independent temperature control. Rotate the adjustment knob to set desired temperature shown in the Temperature Display. Rotate fully counter-clockwise for maximum A/C (LO).

2. A/C Button

Push the A/C Control Button to change the current setting. The indicator illuminates when the A/C is ON. Pushing the AUTO control button will cause the A/C operation to change to AUTO mode and the A/C indicator will turn OFF.

3. MAX Defrost Button

Push the MAX Defrost button to change the current airflow setting to Defrost mode. The indicator illuminates when this feature is ON. Performing this function will cause the automatic climate controls to change to manual mode. The blower speed increases to full (all LEDs ON) when MAX Defrost mode is selected, the air conditioning compressor is turned ON (LED ON), both driver and passenger temperature controls are set to (HI), defrost mode is selected (LED ON), rear defroster is turned ON (LED ON) and the air recirculation is turned OFF (LED

OFF). If the MAX Defrost mode is turned OFF, the climate system will return to the previous setting.

4. Blower Control Indicator LEDs

A total of eight LEDs illuminate to visually indicate blower speeds.

5. Rear Defrost Button

Push the Rear Defrost button to turn ON the rear window defroster and the heated outside mirrors (if equipped). An indicator will illuminate when the rear window defroster is ON. The rear window defroster automatically turns OFF after 20 minutes.

6. AUTO Button

Pushing this button will automatically control the interior cabin temperature by adjusting airflow distribution and amount. Performing this function will cause the automatic climate controls to change between manual mode and automatic modes.

7. Passenger Temperature Control

Provides the passenger with independent temperature control. Rotate the adjustment knob to set desired temperature shown in the Temperature Display.

NOTE: Rotating the Passenger Temperature Control knob while in Sync mode will automatically exit Sync.

8. Passenger Temperature Display

Rotate the Passenger Temperature Control dial clockwise or counter-clockwise to adjust the air temperature in the front right (Passenger Temperature Control) zone of the passenger compartment. The set temperature is shown on the display. Turning the control knob completely in one direction or the other activates the ″HI″ (maximum heating) or ″LO″ (maximum cooling) functions shown in the display, respectively. To deactivate these functions, turn the temperature knob to the desired temperature.

9. SYNC Button

Push the Sync button to toggle the Sync feature ON/OFF. The Sync indicator will illuminate when this feature is enabled. Sync is used to synchronize the passenger temperature setting with the driver temperature setting. Changing the passenger temperature setting while in Sync mode will automatically exit this feature and return to the separate management of air temperatures in the two zones.

10. Mode Buttons

Airflow distribution modes can be adjusted so air comes from the instrument panel outlets, floor outlets, de-mist outlets and defrost outlets by selecting these buttons. One, two or all modes may be selected at any one time.

11. Blower Control

Blower control is used to regulate the amount of air forced through the climate system. Adjusting the blower will cause the automatic mode to change to manual operation. The speeds can be selected by rotating the Blower Control adjustment knob.

12. ON/OFF Button

Push this button to turn the Climate Control ON/OFF.

13. Recirculation Button

Push to change the current setting. The LED illuminates when ON.

NOTE:

- When in Max Defrost mode, the Recirculation button will change the setting to normal Defrost mode. This indicates that you can not enter to this mode due to fogging risk.
- When the Auto indicator is ON and the Recirculation indicator is OFF, the Recirculation is in AUTO mode. If the Recirculation indicator is ON, the Recirculation setting is manual and Recirculation is ON.

14. Driver Temperature Display

Rotate the Driver Temperature Control dial clockwise or counter-clockwise, to adjust the air temperature in the front left (Driver Temperature Control) zone of the passenger compartment. The set temperature is shown on the display. Turning the control knob completely in one direction or the other activates the "HI" (maximum heating) or "LO" (maximum cooling) functions shown in the display, respectively. To deactivate these functions, turn the temperature knob to the desired temperature.

Description

The Automatic Dual Zone Climate Control system regulates the air temperatures in the passenger compartment in two zones: driver side and passenger side.

The system maintains comfort inside the passenger compartment and compensates for possible variations in external climate conditions.

The Climate Control system can recognize extremely cold (or extremely hot) conditions in the passenger compartment and provide optimal management of the system's capabilities.

NOTE: The reference temperature is 72° F (22° C) for optimal comfort management.

The automatically controlled functions are:

- Air temperature at the driver/front passenger side vents.
- Blower speed (continuous variation of the air flow).
- Compressor engagement (for cooling/dehumidifying the air).
- Air recirculation.

All these functions can be adjusted manually by operating the system, selecting one or more functions and modifying their parameters.

Automatic control of the functions will be suspended: the system will only override the settings for safety reasons.

Manual selections always take priority over automatic ones and are stored until the AUTO button is pushed or the system itself intervenes for specific safety reasons.

The amount of air introduced into the passenger compartment is not affected by car speed; it is regulated by the fan, which is controlled electronically.

The air temperature is always automatically controlled according to the temperature set on the display (except for when the system is off or in certain conditions when the compressor is not running).

The system allows the following to be set or adjusted manually:

- Driver/passenger side air temperature
- Blower speed (continuous variation)
- Air distribution to seven positions
- Compressor activation
- Rapid defrosting/demisting function
- Air recirculation
- Heated rear window
- System deactivation

NOTE: The Climate Control system detects the passenger compartment temperature using a temperature sensor, located in the lower instrument panel between the center console and the steering wheel.

Turning On The Climate Control System

The Climate Control system can be turned on in different ways: it is recommended to turn the Temperature Control knobs to set the desired temperatures and then push the AUTO button.

The system operates automatically to adjust the temperature, quantity and distribution of the air introduced into the passenger compartment. It also manages the air recirculation function and the activation of the air conditioning compressor.

During automatic operation, you can change the set temperatures, air distribution and blower speed at any time by using the relevant buttons or knobs: the system will automatically change the settings to adjust to the new requirements.

During automatic operation (AUTO), varying the air flow and/or distribution or pushing the A/C control button causes the AUTO function LED to turn off and the system to operate in MANUAL mode.

Adjusting The Air Temperature

Rotate the Driver Temperature Control, or the Passenger Temperature Control, dial clockwise or counterclockwise, to adjust the air temperature in the front left (Driver Temperature Control) or right (Passenger Temperature Control) zone of the passenger compartment.

The set temperatures are shown on the displays.

Push the SYNC button to align the air temperature between the two zones.

Turn the Passenger Temperature Control knob to return to the separate management of air temperatures in the two zones.

Turning the control knobs completely in one direction or the other activates the "HI" (maximum heating) or "LO" (maximum cooling) functions respectively.

To deactivate these functions, turn the temperature knob to the desired temperature.

Air Distribution Selection

By pushing the Mode Control buttons (Defrost/Panel/Floor buttons), it is possible to set one of the seven possible air distributions manually by activating one or more mode buttons:

- Defrost Mode – Air flow to the windshield and front side window diffusers to defrost them. Use Defrost mode with maximum temperature settings for best windshield and side window defrosting.
- Panel Mode – Air flow is distributed between the central and side instrument panel vents.
- Floor Mode – Air flow is directed from the front and rear footwell diffusers.
- Floor and Panel Modes – Air flow is distributed between the footwell diffusers and the central and side instrument panel vents.
- Floor and Defrost Modes – Air flow distributed between footwell diffusers and windshield and front side window defrosting diffusers. This distribution setting allows the passenger compartment to be warmed effectively and prevents the windows from misting.
- Defrost and Panel Modes – Air flow distribution between windshield defrosting diffusers and side and central instrument panel vents.
- Defrost, Panel and Floor Modes – Air flow distribution to all the diffusers.

NOTE: Air always flows from the side instrument panel diffusers: it is, however, possible to interrupt the air flow by operating the wheel located near the corresponding vents.

In AUTO mode, the climate control system automatically manages air distribution (LEDs on the Mode Control buttons are off).

When set manually, the air distribution is indicated by the LEDs on the selected buttons turning on.

In combined function mode, functions are enabled together with those already set when the relevant button is pushed. If a button whose function is already active is pushed, the operation is cancelled and the corresponding LED turns off.

To restore automatic control of the air distribution after a manual selection, push the AUTO button.

Adjusting The Fan Speed

Rotate the Blower Control knob to increase/decrease the fan speed.

The speed is indicated by the eight Blower Control Indicator LEDs, located above the Blower Control knob, turning on.

- Maximum blower speed = all LEDs illuminated
- Minimum blower speed = one LED illuminated

The blower can only be turned off if the A/C compressor has been turned off by pushing the A/C Control button.

NOTE: To restore automatic control of the fan speed after a manual adjustment, push the AUTO button.

AUTO Button

When the AUTO button is pushed (LED illuminated), the Climate Control system automatically adjusts the following settings in the corresponding zones:

- Quantity and distribution of the air introduced into the passenger compartment.
- Climate Control system compressor.
- Air Recirculation.

Cancelling all previous manual adjustments.

This is indicated by the AUTO button LED turning on.

If the AUTO button is pushed when the AUTO LED is on, the system changes to manual mode; it displays the current flow and distribution status, which will no longer be managed automatically.

If a manual adjustment is made to the air distribution, the A/C button or the blower speed, the LED turns off to indicate that the system is no longer controlling all functions automatically.

To restore automatic system control after one or more manual adjustments, push the AUTO button.

SYNC Button

Push the "SYNC" button (LED illuminated) to correlate the passenger side air temperature with that of the driver side.

This function makes temperature regulation easier when the driver is travelling alone.

Turn the Passenger Temperature Control knob to set the passenger side temperature and return to separate air temperature management.

Air Recirculation

The Air Recirculation is managed by the following:

- Forced activation (air recirculation always on): indicated by the LED on the Recirculation Control button.
- Forced deactivation (air recirculation always off, air intake from the outside), signalled by the LED on the Recirculation Control button switching off.

Forced activation/deactivation can be selected by pushing the Recirculation Control button.

When the On/Off button is pushed, the Climate Control system automatically activates internal air recirculation (LED on Recirculation Control button on).

In automatic operation, recirculation is managed automatically by the system according to outside environmental conditions.

NOTE:

- Use of the recirculation system makes it possible to reach the required heating/cooling conditions faster. It is not recommended to use it on rainy/cold days as it would considerably increase the possibility of the windows misting up inside (especially if the Climate Control system is off). When the outside temperature is low, recirculation is forced off (air drawn in from the outside) to prevent the windows from misting up.
- It is not recommended to use internal air recirculation when the outside temperature is low, since the windows could mist up rapidly.
- When defrost mode is selected recirculation is turned off to prevent the windows from misting up.

Climate Control System Compressor

Push the A/C Control button to activate/deactivate the compressor (activation is indicated by the LED on the button turning on).

The system remembers that the compressor has been turned off, even after the engine has stopped.

Pushing the A/C button will stop AUTO MODE (AUTO LED will turn off). To restore automatic control of compressor, push the AUTO button again.

NOTE: With the compressor off, air cannot be introduced to the passenger compartment with a temperature lower than the outside temperature. Under certain environmental conditions, windows could mist rapidly since the air is not dehumidified.

MAX A/C

MAX A/C sets the system for maximum cooling performance.

Rotate the driver temperature control adjust knob counter-clockwise for MAX A/C. Both driver and passenger temperature displays will show MAX A/C LO.

In MAX A/C, the blower speed and mode position can be adjusted to desired user settings. Pressing other settings will cause the MAX A/C operation to switch to the selected setting and MAX A/C to exit.

Rapid Window Demisting (MAX-Defrost function)

Push the MAX-defrost button to activate (LED on) the windshield and side window demisting function.

The Climate Control system carries out the following operations:

- Turns on the air conditioning compressor when environmental conditions are suitable.
- Turns air recirculation off.
- Sets blower fan to the maximum speed.
- Directs air flow to windshield and front side window diffusers.
- Activates the heated rear window defrost.
- Activates the heated windshield (if equipped).
- Displays the fan speed (Blower Control Indicator LED illuminated).

When the function is activated, the AUTO button LED turns off. With the function activated, the only possible manual adjustments are pushing the A/C control button, adjusting the fan speed and turning the heated rear window off.

When the Recirculation Control or AUTO buttons are pushed, the Climate Control system will deactivate the Front Defrost (MAX-DEF) function.

Selecting the footwell/windshield or only windshield distribution activates the Climate Control system compressor and the air recirculation is set to "outside air" intake.

This logic guarantees optimum visibility at the windows. Max-defrost is also available in manual mode.

Rear Window Defrosting

Push and release the rear window defrost button to turn the function on/off.

Activation of this function is indicated by the rear defrost indicator light on the instrument panel turning on. The function is automatically deactivated after 20 minutes.

If equipped, push the rear defrost button to activate the defrosting of door mirrors and heated rear window.

CAUTION!

To avoid causing damage to the rear window defroster heating filaments do not affix stickers or other objects to the inside of the rear glass.

Turning Off The Climate Control System

Push the ON/OFF button.

With the Climate Control system off:

- Air recirculation is on, isolating the passenger compartment from the outside.
- The A/C compressor is off.
- The blower is off.
- The heated rear window can be activated/deactivated.

NOTE: The Climate Control unit stores the temperatures set before the system was turned off and restores them when one of the following knobs/buttons is pushed:

- A/C
- Recirculation
- Max Defrost
- Blower Increase
- AUTO

To restart the Climate Control system in fully automatic mode, push the AUTO button.

System Maintenance

In Winter, the Climate Control system must be turned on at least once a month for approximately 10 minutes.

Have the system inspected at an authorized dealership before the summer.

NOTE: The system uses R-1234yf (refrigerant) which does not pollute the environment in the event of accidental leakage. Under no circumstances is the use of R-134a (refrigerant) allowed.

MY SKY SUN ROOF — IF EQUIPPED

Removable Roof — IF Equipped

The roof consists of front and rear panels that can be removed independently.

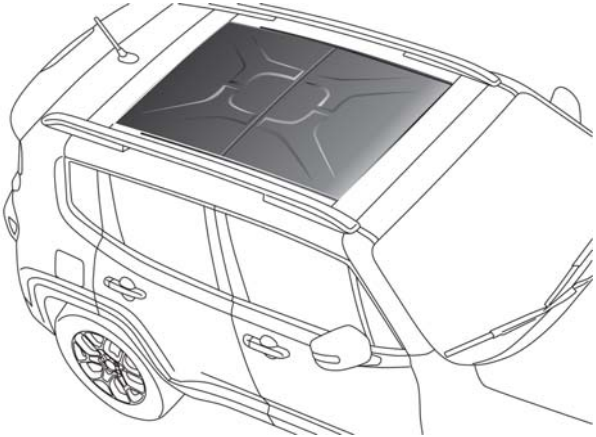

My Sky Retractable Roof

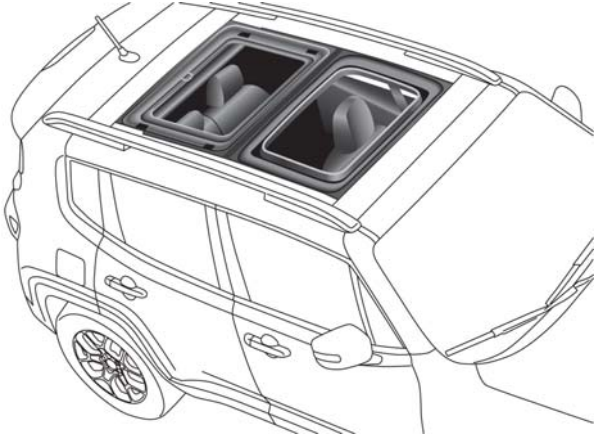

My Sky Retractable Roof Removed

On some vehicles the front panel can be power operated refer to “Power My Sky” in this section.

CAUTION!

The panels are able to withstand the snow. However, it is recommended that you remove excessive layers of snow that have accumulated or damage to the panels may occur.

Power My Sky — If Equipped

Open/Close The Front Panel

The power My Sky switches are located on the overhead console. The switches are used to open and close the front panel.

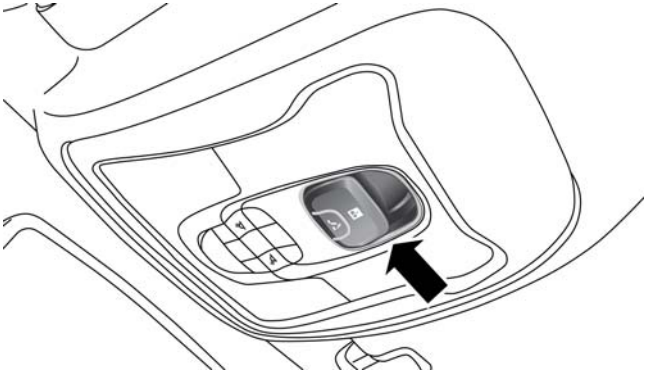

Front Panel Operation Switch

Operation Switch

1 — Front Panel Open/Close Switch
2 — Front Panel Vent Switch

To retract the front panel to the open position, push the Open/Close button.

From the fully open position, pull the Open/Close switch: the front panel will close completely.

Venting The Front Panel

To vent the front panel push and release the vent switch.

During the vent operation any push on the Open/Close switch will stop the closing of the panel.

NOTE: If the My Sky is in open position, the vent switch must be held until the panel vents.

Anti-Pinch Feature

The front panel of the retractable roof is equipped with a anti-pinch safety system that is able to detect the presence of an obstacle during the opening and closing motion of the panel.

When this event occurs, the front panel stops and reverses immediately.

NOTE: With both panels removed the retractable roof cannot be opened or closed.

Removing And Installing Panels

NOTE:

- Remove the panels only when the vehicle is stationary.
- The rear panel can be removed only when the front panel is completely closed or removed.

Removing Panels

1. Front panel must be in the closed position to remove panel.

2. From inside of the passenger compartment, insert the supplied key into the latch key hole.

Supplied Key

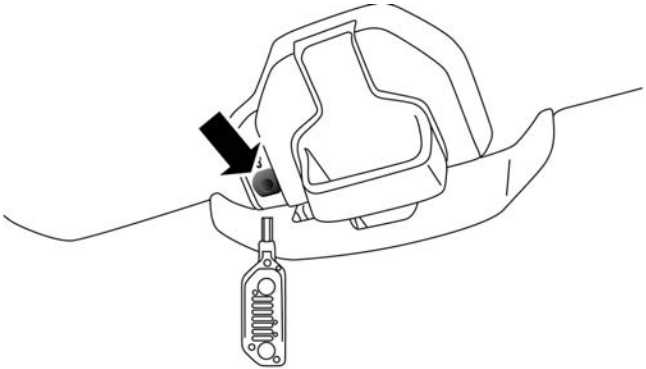

Latch Key Hole

3. Rotate and keep the key turned to the symbol to release the lock and pull the panel handle down and away from the stowed position, unlocking the panel.

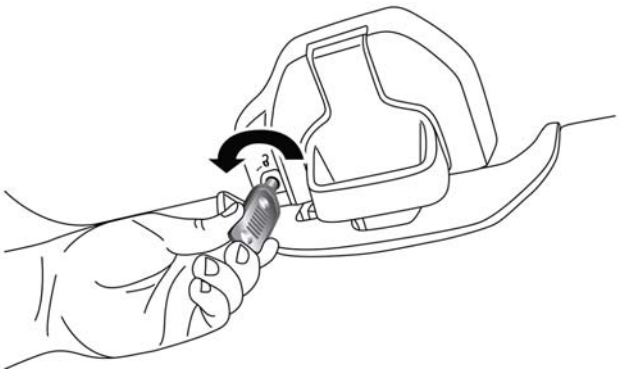

Rotating Supplied Key

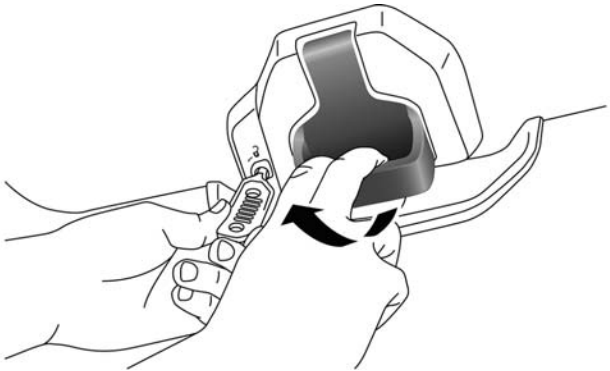

Unlocking Panel Handle

4. Remove the key from the Latch Key Hole.

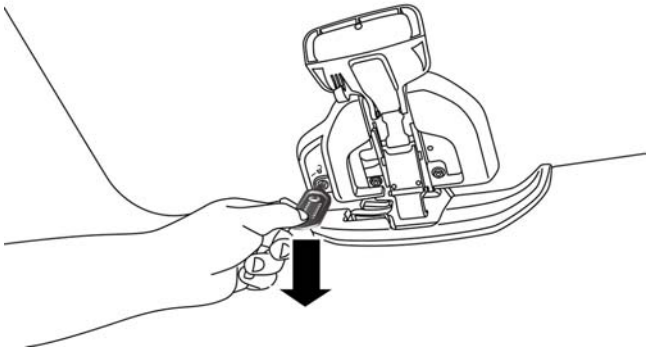

Removing Key

5. Remove the panel(s).

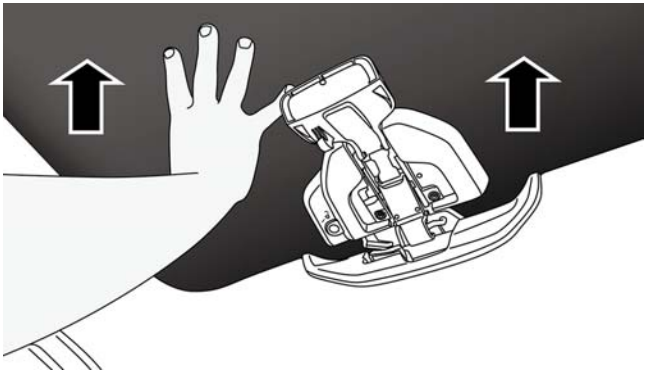

Push Panel Up

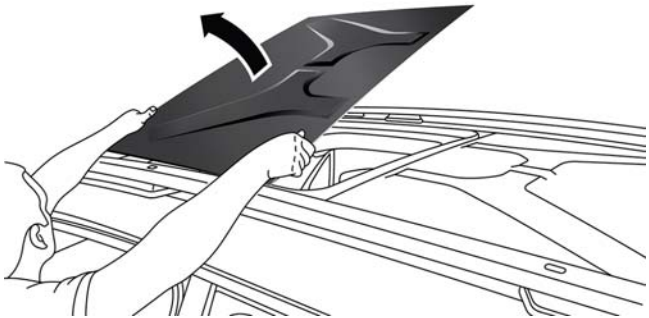

Removing Panel

6. Place the panel(s) inside of the provided bag for storage in the cargo area.

NOTE: An air deflector is available on the Jeep accessory line. This deflector may be used to avoid the "tunnel effect" inside the vehicle, if the front panel is removed.

Installing Panel

1. From outside the vehicle, place the panel(s) on the slides.
2. Gently slide the front panel forward, or the rear panel backwards.

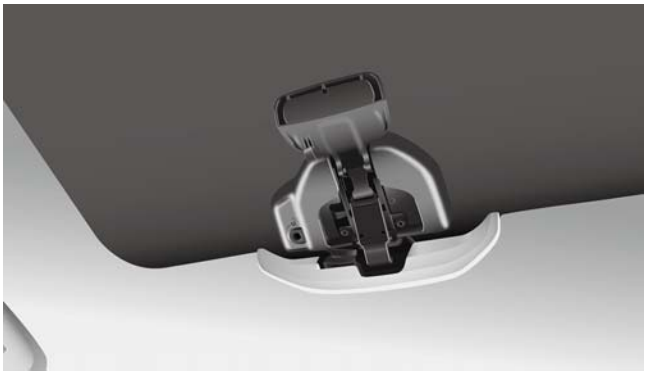

Installing Panel

3. Align the colored guide tabs to ensure the panel(s) close properly. Front panel is labeled with yellow guide tabs. Rear panel is labeled with blue guide tabs.

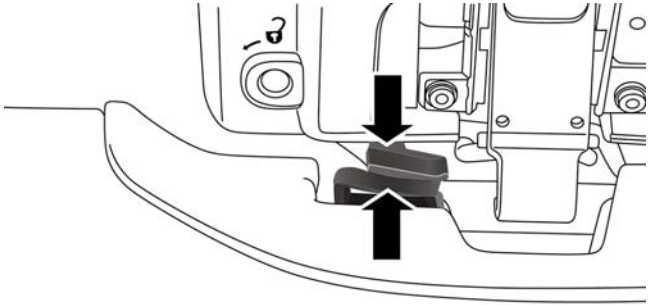

Guide Tabs

4. From inside the vehicle, pull the handle down and toward the stowed position, locking it into place.

Closing Panel Handle

5. Make sure that the panel has been properly refitted. From inside the passenger compartment, push upward on the panel from the bottom, in order to verify that it is properly latched to the clamping locks.

Panel Locked

Bag For Housing Panels — If Equipped

After the panels have been removed, store the roof panels inside of the bag located inside the storage compartment.

NOTE: It is recommended to do this procedure outside of the car.

Roof Panel Bag

For proper housing, proceed as follows:

1. Open the Roof Panel Bag and lift the panel dividers toward the outside.

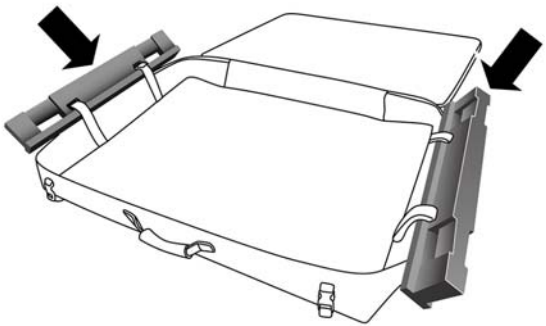

Panel Dividers

2. Place the first panel into the bag, fold the panel dividers and place the second panel into the bag.

First Panel In Storage Bag

Second Panel In Storage Bag

3. Close the bag and place it on the inside the cargo area.
4. Open the Velcro straps provided on the bag. Anchor them firmly at the tie-down hooks located in the cargo area.

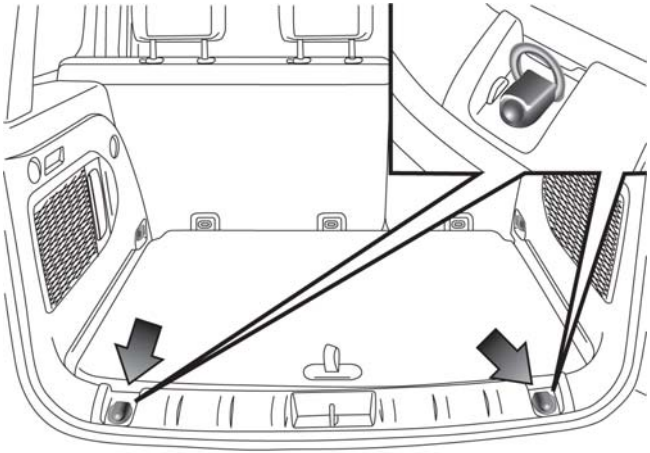

Tie-Down Hook Locations

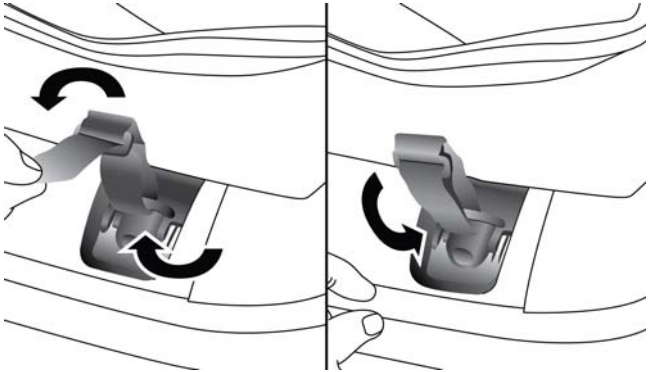

Tie-Down Straps

NOTE:

- Do not load objects that weigh over 165 pounds (75 kg) on top of the roof panel bag.
- The bag is washable. Refer to the documentation that is supplied with the bag.

Emergency Open/Close

If the Power My Sky switch fails, the retractable roof can be operated manually as follows:

1. Remove the protective cap located on the inner lining.
2. Remove the Allen Key or My Sky Key that is supplied in the tool bag in the cargo area.
3. Insert the Allen Key or My Sky Key into the key hole and turn it clockwise to open the roof or counter-clockwise to close.

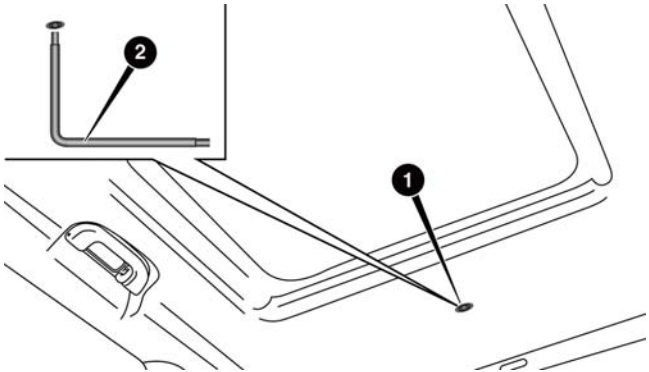

Emergency Key And Key Hole

1 — Key Hole
2 — Allen Key

CAUTION!

- **When refitting panels, be careful to avoid fingers, scarves, ties and items of clothing from getting caught under the panels themselves.**
- **Do not open the roof in the presence of snow or ice. There is risk of damage.**

HOOD

Opening

Two latches must be released to open the hood.

Pull the hood release lever located under the drivers side of the instrument panel.

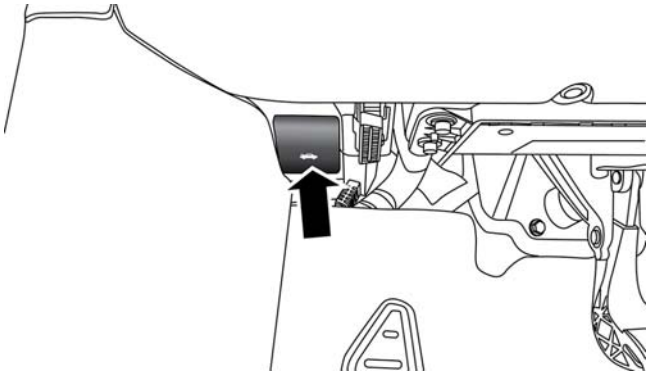

Hood Release Lever

Move to the outside of the vehicle and push the safety latch release lever toward the passenger side of the vehicle. The hood release lever is located behind the center front edge of the hood.

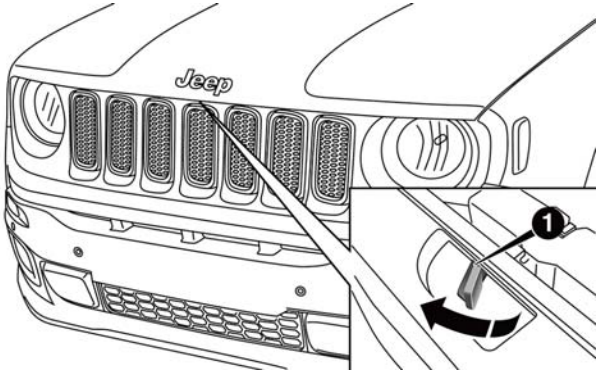

Safety Latch

1 — Safety Latch Location

Remove the support rod from the locking tab and insert it into the seat located on the underside of the hood. Be sure the rod is locked into position.

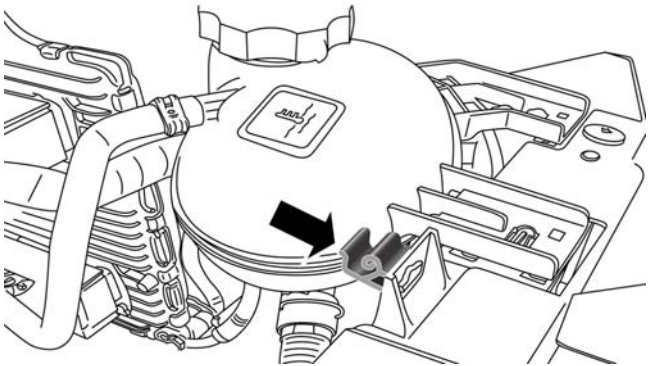

Locking Tab

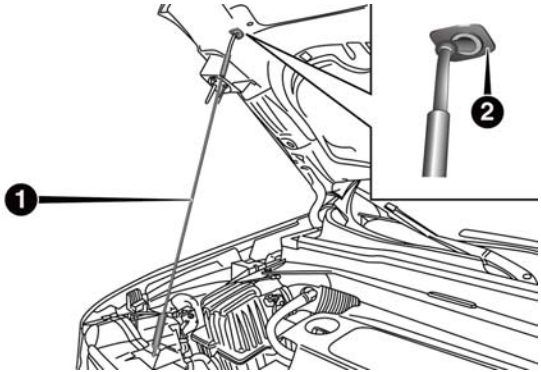

Support Rod And Seat

1 — Support Rod
2 — Support Rod Seat

Closing

Hold up the hood with one hand and with the other hand remove the support rod from its seat and reinsert it into the locking tab.

Lower the hood to approximately 6 inches (15 cm) from the engine compartment and drop it. Make sure that the hood is completely closed.

CAUTION!

To prevent possible damage, do not slam the hood to close it. Lower the hood until it is open approximately 6 inches (15 cm), and then drop it. This should secure both latches. Never drive your vehicle unless the hood is fully closed, with both latches engaged.

WARNING!

Be sure the hood is fully latched before driving your vehicle. If the hood is not fully latched, it could open when the vehicle is in motion and block your vision. Failure to follow this warning could result in serious injury or death.

LIFTGATE

Opening

To unlock the liftgate, use the Remote Keyless Entry (RKE) transmitter or activate the power door lock switches located on the driver door handle.

To open the liftgate, squeeze the electronic liftgate release and pull the liftgate open with one fluid motion.

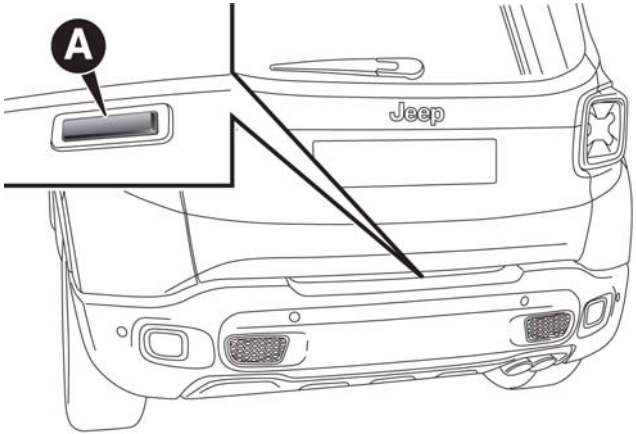

Liftgate Handle Location

A — Liftgate Handle

The Liftgate Passive Entry unlock feature is built into the Electronic Liftgate release. With a valid Passive Entry RKE transmitter within 3 ft (1.0 m) of the Liftgate, push the Electronic Liftgate release to open with one fluid motion.

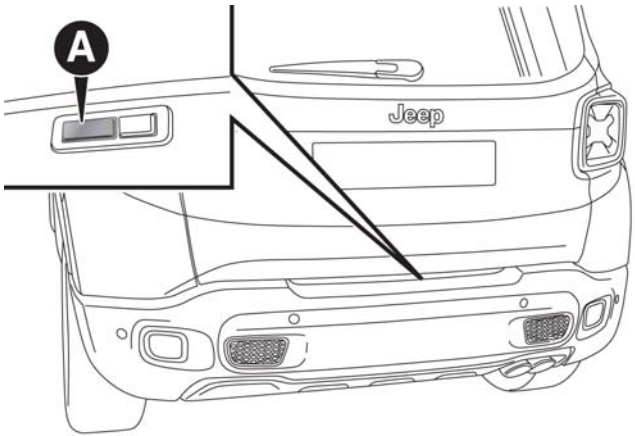

Passive Entry Liftgate Handle Location

A — Electronic Liftgate Release/Liftgate Passive Entry Location

To open the liftgate, squeeze the electronic liftgate release and pull the liftgate open with one fluid motion.

Emergency Opening

Proceed as follows:

1. Remove the rear shelf (if equipped).
2. Fold the rear seats forward.
3. Using the supplied screwdriver (located under cargo floor in tool kit), remove the yellow tab.

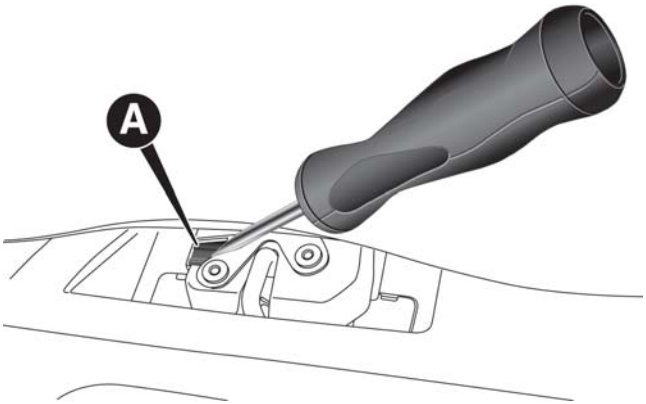

Emergency Opening Tab Location

A — Yellow Tab

4. Insert the screwdriver into the release tab slot to trigger the release tab of the Liftgate.

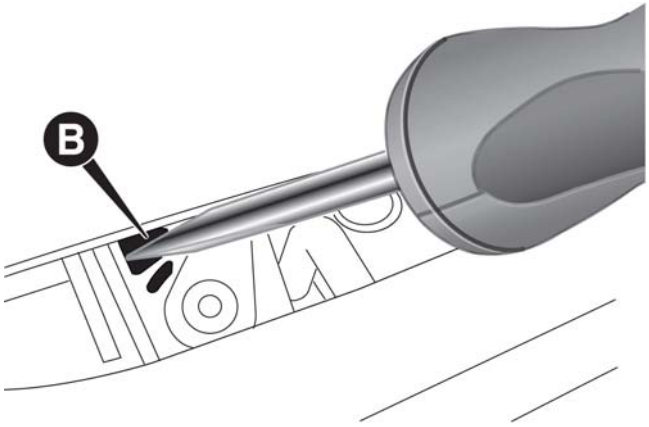

Emergency Release Tab Slot Location

B — Release Tab Slot

Closing

Grasp the liftgate closing handle and initiate lowering the liftgate. Release the handle when the liftgate takes over the closing effort.

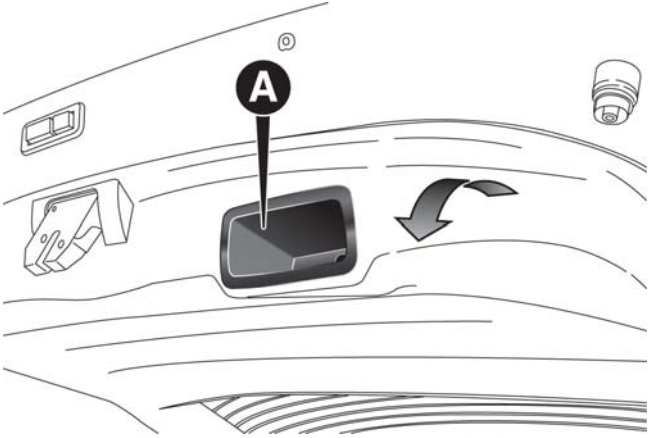

A — Liftgate Closing Handle

NOTE: Before closing the Liftgate, make sure to be in possession of the key because the Liftgate will be locked automatically.

Cargo Area Features

Cargo Load Floor

The vehicle is equipped with a load floor that can be adjusted as needed.

Position 1 (Lowered Position):

This position allows you to make the load floor flat for ease of loading/unloading objects from the cargo area. This position also makes it possible to use the space below as another compartment for storing fragile or smaller objects.

Position 2 (Elevated Position):

When the rear seatbacks and front passenger seat is folded flat, it will allow for loading objects of long dimensions. It is recommended to use this position only during the actual transporting of the objects, then bring the load floor in position 1.

Table Tilt Load

In addition to the two positions described above, the load floor can also be placed in a tilted position (slanted toward the rear seatbacks as to ease the access to the underlying zone of the luggage compartment (e.g. to pick up the spare tire or the Tire Service Kit).

Place the load floor in a way that it rests at the supports 1 and 2 on the sides of the cargo area.

The load floor provides securing of any cargo inside this position, so that the cargo will slide in the case of sudden braking.

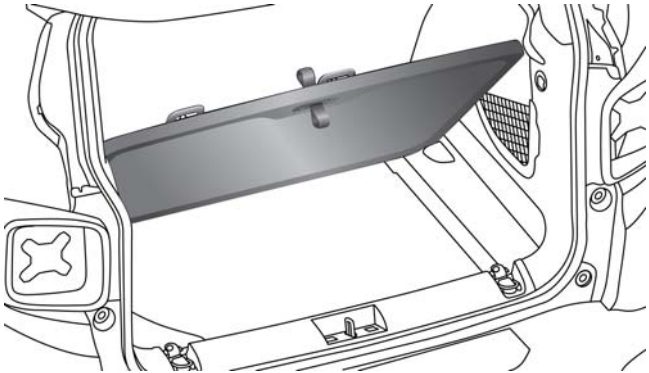

Load Floor

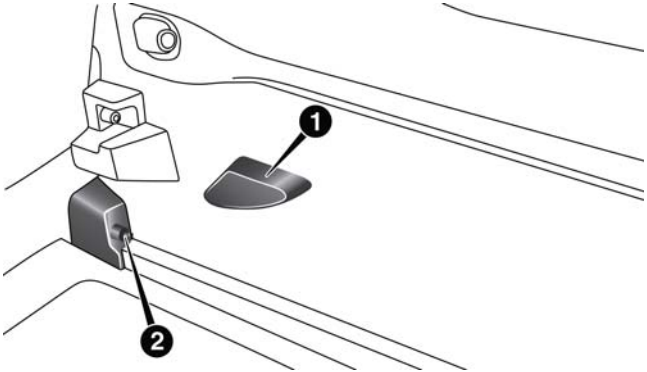

Table Tilt Load Supports

1 — Loading Floor Support One
2 — Loading Floor Support Two

Access To The Loading Floor

To access the double load compartment, proceed as follows:

1. Lift up on the Load Floor Handle.

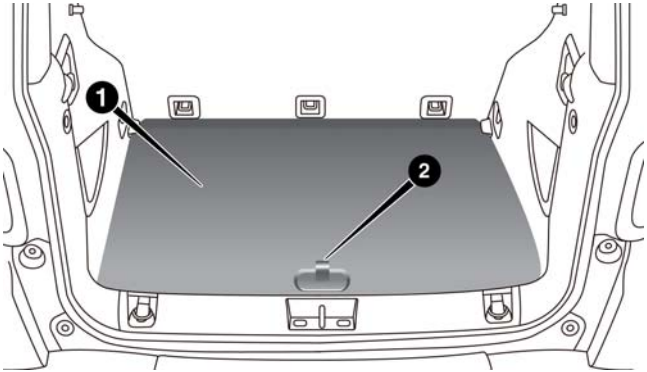

Load Floor Handle

1 — Cargo Load Floor
2 — Cargo Load Floor Handle

2. Place the desired objects inside the compartment.

3. Reposition the load floor.

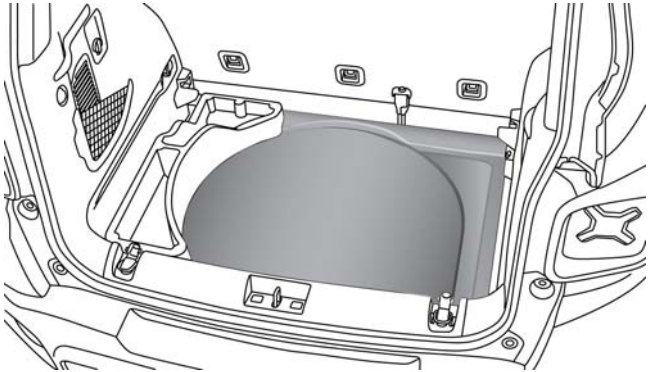

Cargo Area Storage

CAUTION!
The load floor must be arranged in a central position with respect to cargo area.

Displacement Load Floor

To position the load from the lower to the upper position, proceed as follows:

1. Grasp the load floor handle and lift up the load floor.
2. Correctly place the load floor on the side panel guides and on the rear cross member.

Access To Tire Service Kit Or Spare Tire

To access the Tire Service Kit or spare tire and container carrier, proceed as follows:

1. Grasp the load floor handle and remove the floor.
2. Pull the tab and lift up on the carpet.

Anchoring Of The Load

The cargo tie-downs, located on the cargo area floor, should be used to safely secure loads when the vehicle is moving.

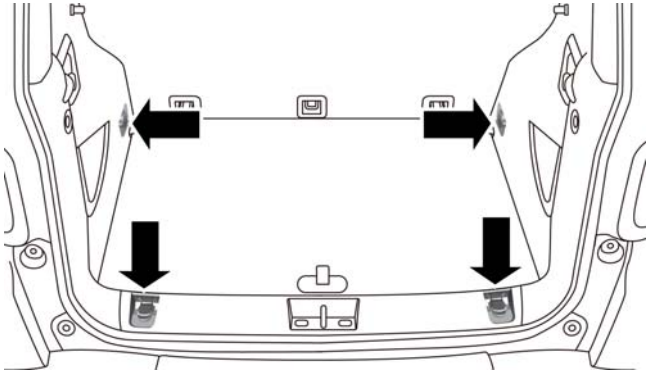

Tie-Downs

The side panels maybe equipped with three grocery hooks (one on the left side and two on the right side) for securing loads that are not excessively heavy.

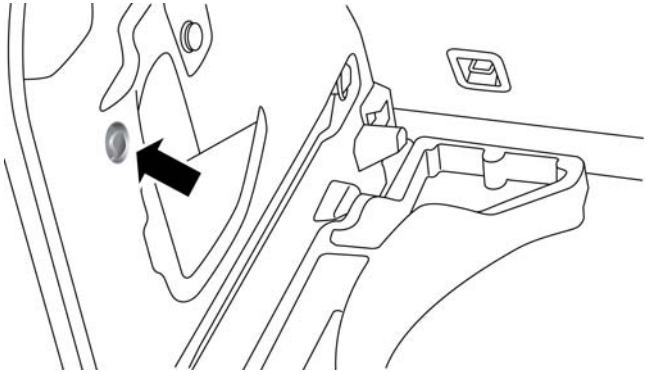

Grocery Hook

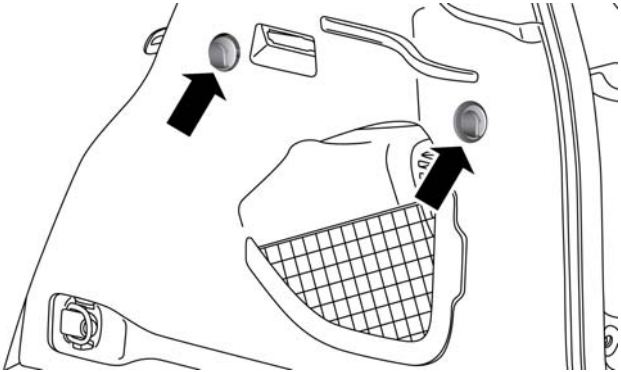

Grocery Hooks

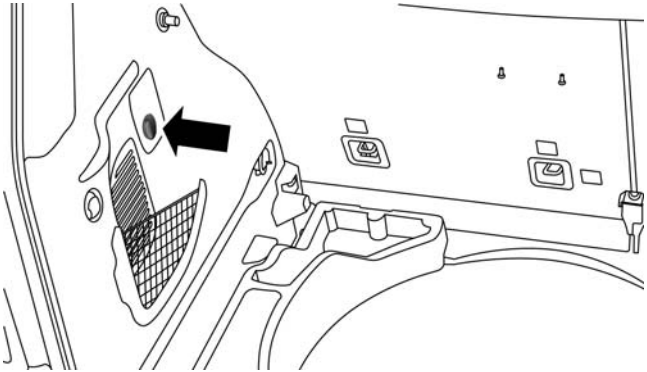

Rear 12 Volt Cargo Power Outlet

Rear Power Outlet

The rear cargo power outlet is located on the left side of the cargo area.

The outlet only works when the ignition is in the MAR/RUN position.

NOTE: The rear cargo power outlet can be changed to "battery" powered all the time by switching the power outlet Integrated Power Module 20A fuse from fuse location F18 to F30. Refer to "Engine Compartment Controller" in "In Case Of Emergency" for further information.

CAUTION!

Do not connect devices with power higher than 180 Watts (15 Amps) to the socket. Do not damage the socket by using unsuitable adaptors. If the 180 Watt (15 Amp) power rating is exceeded the fuse protecting the system will need to be replaced.

WARNING!

To avoid serious injury or death:

- **Only devices designed for use in this type of outlet should be inserted into any 12 Volt outlet.**
- **Do not touch with wet hands.**
- **Close the lid when not in use and while driving the vehicle.**
- **If this outlet is mishandled, it may cause an electric shock and failure.**

Cargo Box — If Equipped

The cargo area contains a preformed cargo box that can be used for the storage of objects that allows you to obtain a uniform level when loading.

Cargo Box

NOTE: The cargo box is sized for a maximum capacity of distributed weight equal to 242 lbs (110 kg).

INTERNAL EQUIPMENT

Glove Compartment

The glove compartment is located on the passengers side of the instrument panel.

To open the glove compartment proceed as follows:

1. Unlock the compartment using the vehicle key.
2. Pull the handle to open the compartment.

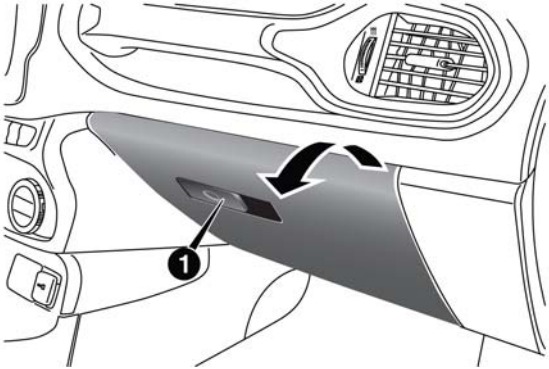

Opening The Glove Compartment

1 — Glove Compartment Handle

Once the glove compartment is open, a light will turn on to illuminate the compartment.

NOTE:

- Do not insert objects in the glove compartment that will not allow the compartment to fully close.
- The glove compartment should be completely closed while the vehicle is in motion.

Sun Visors

Sun visors are located on both sides of the rearview mirror. The visors can be lowered or moved to the side to help block sunlight from entering the windshield or door glass.

To move the sun visor against the driver or passenger door glass, remove the sun visor from the hook and turn it toward the side window.

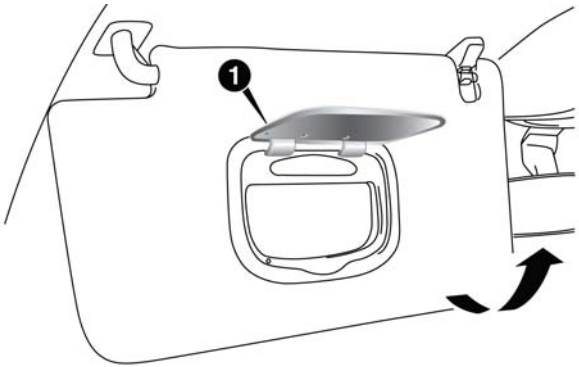

Sun Visor Mirror

1 — Sun Visor Mirror Cover

The visors also have illuminated vanity mirrors to allow use in low light conditions.

Lift upward on the mirror cover to access the mirror.

Extendible Sun Visor

To extend the sun visor, proceed as follows:

1. Place the sun visor against the door glass by detaching it from the hook and turning it toward the side window.
2. Slide the visor along the rod to provide coverage more to the rear.

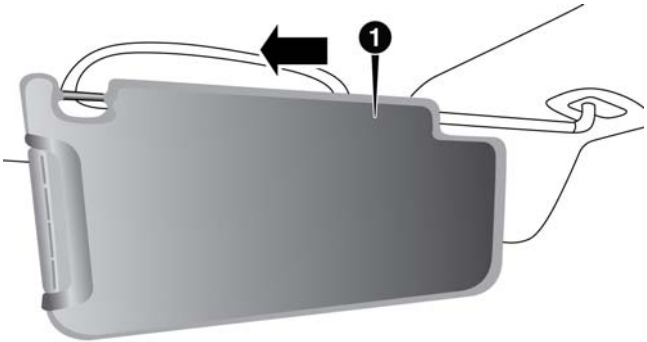

Sliding Sun Visor

1 — Sun Visor

3. Slide out the sun visor extender for even more side coverage toward the rear.

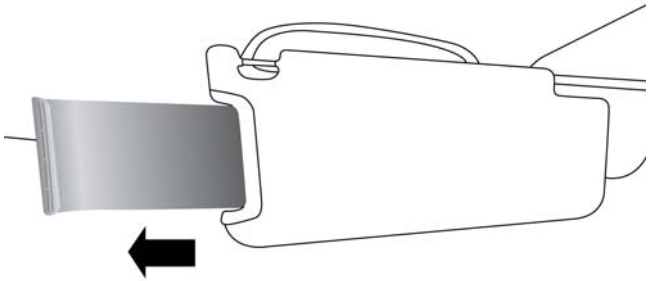

Using The Extender

Power Outlets

The front power outlet is located under the center stack of the instrument panel. It only operates with the ignition in the MAR/RUN position.

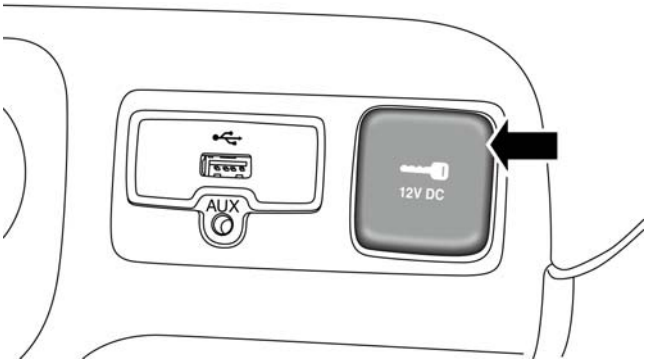

12 Volt Power Outlet

Models equipped with the optional "smoker kit," will have a cigar lighter instead of the power outlet. Refer to "Cigar Lighter" in "Internal Equipment Storage" for further information.

CAUTION!

Do not connect devices with power higher than 180 Watts (15 Amps) to the socket. Do not damage the socket by using unsuitable adaptors. If the 180 Watt (15 Amp) power rating is exceeded the fuse protecting the system will need to be replaced.

WARNING!

To avoid serious injury or death:

- **Only devices designed for use in this type of outlet should be inserted into any 12 Volt outlet.**
- **Do not touch with wet hands.**
- **Close the lid when not in use and while driving the vehicle.**
- **If this outlet is mishandled, it may cause an electric shock and failure.**

CAUTION!

- **Many accessories that can be plugged in draw power from the vehicle's battery, even when not in use (i.e., cellular phones, etc.). Eventually, if plugged in long enough, the vehicle's battery will discharge sufficiently to degrade battery life and/or prevent the engine from starting.**
- **Accessories that draw higher power (i.e., coolers, vacuum cleaners, lights, etc.) will degrade the battery even more quickly. Only use these intermittently and with greater caution.**
- **After the use of high power draw accessories, or long periods of the vehicle not being started (with accessories still plugged in), the vehicle must be driven a sufficient length of time to allow the generator to recharge the vehicle's battery.**

Power Inverter — If Equipped

There is a 115 Volt, 150 Watt Power Inverter outlet located on the back of the center console to convert DC current to AC current. The Power Inverter can power cellular phones, electronics and other low power devices requiring up to 150 Watts. Certain high-end video game consoles, such as Playstation4 and XBox One will exceed this power limit, as will most power tools.

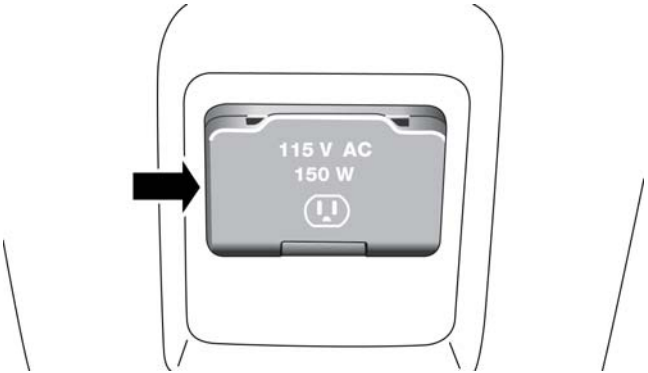

115 Volt Power Inverter

The Power Inverter will automatically turn on and off when the device is plugged in or removed.

The Power Inverter is designed with built-in overload protection. If the power rating of 150 Watts is exceeded, the Power Inverter will automatically shut down. Once the electrical device has been removed from the Power

Inverter it will automatically reset. To avoid overloading the circuit, check the power ratings on electrical devices prior to using the Power Inverter.

WARNING!

To avoid serious injury or death:
- **Do not insert any objects into the receptacles.**
- **Do not touch with wet hands.**
- **Close the lid when not in use.**
- **If this outlet is mishandled, it may cause an electric shock and failure.**

Cigar Lighter — Optional

NOTE: Cigar lighters can be purchased at an authorized dealer through MOPAR parts. To ensure proper cigar lighter operation, a MOPAR knob and element must be used.

The cigar lighter is located on the center console. Push lighter inward to heat.

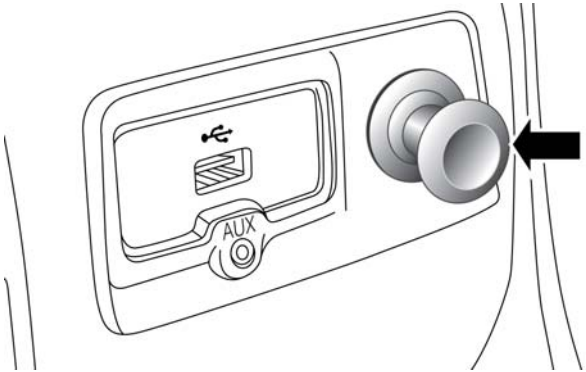

Cigar Lighter

After a few seconds, the lighter automatically returns to its initial position and is ready to be used.

WARNING!

When the cigar lighter is in use it becomes very hot. To avoid serious injury, handle the cigar lighter with care. Always check that the cigar lighter has turned off.

CAUTION!

Do not connect devices with power higher than 180 Watts (15 Amps) to the socket. Do not damage the socket by using unsuitable adaptors. If the 180 Watt (15 Amp) power rating is exceeded the fuse protecting the system will need to be replaced.

Ashtray — Optional

NOTE: Ashtrays can be purchased at an authorized dealer through MOPAR parts.

The ashtray is a plastic container that can be placed into one of the cup holders.

Ashtray Location

Front Armrest

The front armrest is located between the front seats.

The armrest can be adjusted by moving it in the direction indicated by the arrows.

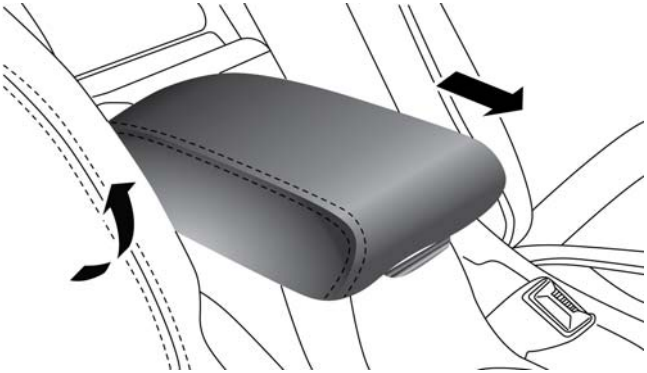

Front Armrest Handle

Storage Compartment

Push the storage handle and lift up the armrest to access the storage compartment.

WARNING!

Do not operate this vehicle with a console compartment lid in the open position. Driving with the console compartment lid open may result in injury in a collision.

Cupholders

There are two cupholders for the front seat passengers, located in the center console.

Front Cupholders

There are two cupholders located in the rear armrest if equipped.

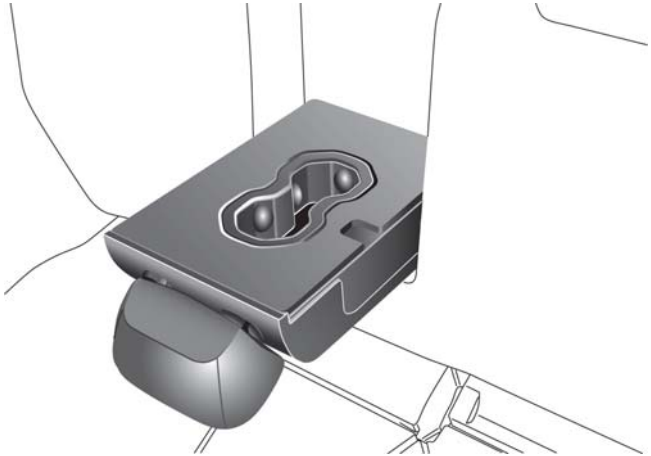

Rear Cupholders

Handle Grip

The handle grip is located on the passenger side of the instrument panel. The handle can be used to enter or exit the vehicle or when traveling on rough terrain.

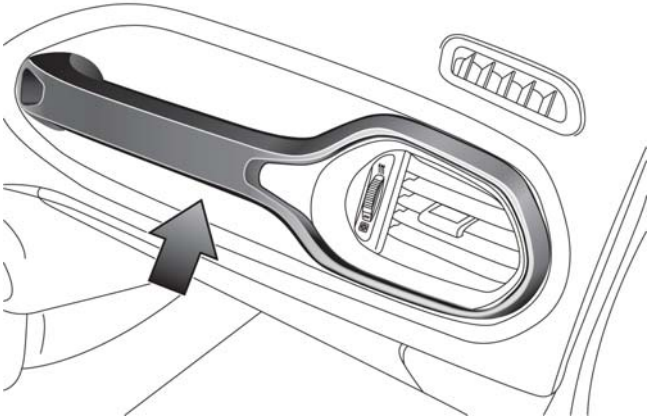

Handle Grip

ROOF LUGGAGE RACK — IF EQUIPPED

Your vehicle may be equipped with a Roof Luggage Rack for transporting accessories.

Crossbars should always be used whenever cargo is placed on the Roof Luggage Rack. Check the straps frequently to be sure that the load remains securely attached.

NOTE: Crossbars can be purchased at a authorized dealer through Mopar parts. External racks do not increase the total load carrying capacity of the vehicle. Be sure that the total occupant and luggage load inside the vehicle, plus the load on the Roof Luggage Rack, do not exceed the maximum vehicle load capacity.

The load carried on the roof, when equipped with a luggage rack, must not exceed 150 lbs (68 kg), and it should be uniformly distributed over the cargo area.

Do not use the retractable roof when using the crossbars.

CAUTION!

- **To avoid damage to the Roof Luggage Rack and vehicle, do not exceed the maximum roof rack load capacity. Always distribute heavy loads as evenly as possible and secure the load appropriately.**
- **Long loads, which extend over the windshield, such as wood panels or surfboards, should be secured to both the front and rear of the vehicle.**
- **Place a blanket or other protection between the surface of the roof and the load.**
- **Travel at reduced speeds and turn corners carefully when carrying large or heavy loads on the roof rack. Wind forces, due to natural causes or nearby truck traffic, can add sudden upward loads. This is especially true on large flat loads and may result in damage to the cargo or your vehicle.**

WARNING!

Roof rack cargo must be securely tied down before driving your vehicle. Improperly secured loads may fall off the vehicle, particularly at high speeds, resulting in personal injury or property damage. Follow the Roof Luggage Rack warnings and cautions when carrying cargo on your roof rack.

GETTING TO KNOW YOUR INSTRUMENT CLUSTER

CONTENTS

■ INSTRUMENT CLUSTER 179

- □ Instrument Cluster With Multi-Functional Display (EVIC) 179
- □ Instrument Cluster With Reconfigurable Multi-Functional Display (DID). 180
- □ Speedometer (EVIC). 181
- □ Speedometer (DID) 182
- □ Odometer 183
- □ Tachometer 183
- □ Fuel Gauge 183
- □ Engine Coolant Temperature Gauge. 184

■ WARNING AND INDICATOR LIGHTS 185

- □ Red Telltale Indicator Lights 186
- □ Yellow Telltale Indicator Lights 198
- □ Green Telltale Indicator Lights 211
- □ Blue Telltale Indicator Light 213
- □ White Telltale Indicator Light 214

■ ONBOARD DIAGNOSTIC SYSTEM (OBD II) . . .215

- □ Onboard Diagnostic System (OBD II) Cybersecurity 215

■ ELECTRONIC VEHICLE INFORMATION CENTER (EVIC) / DRIVER INFORMATION DISPLAY (DID) 216

□ EVIC/DID Description. 216

□ Mapping And Reconfigurable Zone Display (EVIC) — If Equipped 217

□ Mapping And Reconfigurable Zone Display (DID) — (If Equipped) 219

□ Oil Change Reset 221

□ EVIC/DID Control Buttons. 222

□ EVIC/DID Main Menu 223

■ TRIP COMPUTER 234

□ Quantities Displayed 235

□ OK Button 235

INSTRUMENT CLUSTER

Instrument Cluster With Multi-Functional Display (EVIC)

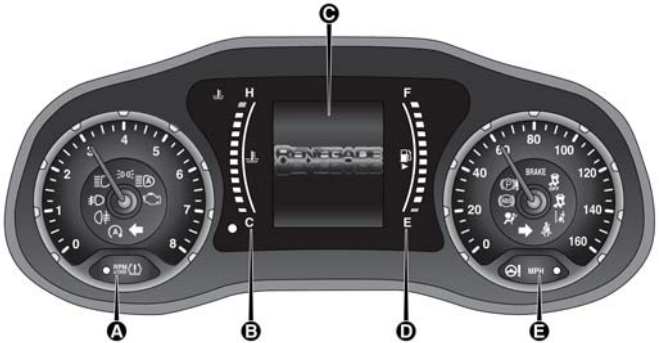

Electronic Vehicle Information Center (EVIC) Cluster

A — Tachometer
B — Digital Indicator Engine Coolant Temperature Warning Light With Maximum Temperature
C — Multi-functional Display
D — Digital Indicator Fuel Level Indicator With The Reserve (the triangle symbol pointing toward the right indicates where the fuel filler door is located)
E — Speedometer (speed indicator)

Instrument Cluster With Reconfigurable Multi-Functional Display (DID)

Driver Information Display (DID) Cluster

A — Tachometer
B — Digital Indicator Engine Coolant Temperature
C — Multi-functional Display
D — Digital Indicator Fuel Level (the triangle symbol pointing toward the right indicates where the fuel filler door is located)
E — Speedometer (speed indicator)

Speedometer (EVIC)

Indicates the speed of the vehicle in MPH or km/h.

Adjusting Instrument Panel Illumination (Light Sensor)

Inside the speedometer, a light sensor detects ambient light conditions and adjusts the brightness of the instrument cluster.

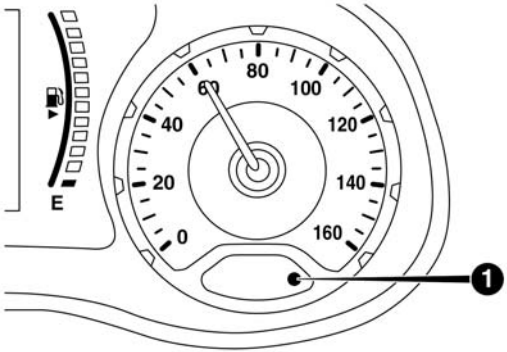

Instrument Panel Light Sensor Zone

1 — Instrument Panel Light Sensor Zone

The instrument works as follows:

- In "day" mode the display, the graphics, and all indexes for the instrument cluster are fully illuminated and are not adjustable
- In "night" mode the display, the graphics, and the indexes are adjusted accordingly. Even the light intensity of the automatic dual zone climate control system and the Uconnect system display

Speedometer (DID)

Indicates the speed of the vehicle in MPH or km/h.

Adjusting Instrument Panel Illumination (Light Sensor)

Inside the speedometer, a light sensor detects ambient light conditions and adjusts the brightness of the instrument cluster.

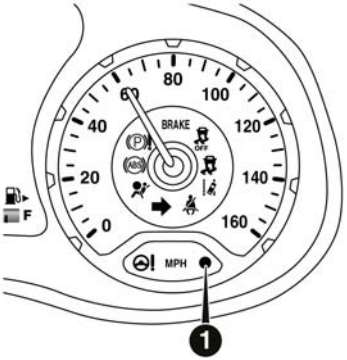

Instrument Panel Light Sensor Zone

1 — Instrument Panel Light Sensor Zone

The instrument works as follows:

- In "day" mode the display, the graphics, and all indexes for the instrument cluster are fully illuminated and are not adjustable
- In "night" mode the display, the graphics, and the indexes are adjusted accordingly. Even the light intensity of the automatic dual zone climate control system and the Uconnect system display

Odometer

The odometer display shows the total distance the vehicle has been driven.

U.S. Federal regulations require that upon transfer of vehicle ownership, the seller certify to the purchaser the correct mileage that the vehicle has been driven. If your odometer needs to be repaired or serviced, the repair technician should leave the odometer reading the same as it was before the repair or service. If s/he cannot do so, then the odometer must be set at zero, and a sticker must be placed in the door jamb stating what the mileage was before the repair or service.

It is a good idea for you to make a record of the odometer reading before the repair/service, so that you can be sure that it is properly reset, or that the door jamb sticker is accurate if the odometer must be reset at zero.

Tachometer

Reports the number of Revolutions Per Minute (RPM) of the engine.

Fuel Gauge

The digital indicator on the display indicates the amount of fuel in the fuel tank.

When the fuel tank level drops to 1.3-1.85 gallons (5-7 liters) remaining, a light will illuminate, a message will display, and a chime will sound.

Engine Coolant Temperature Gauge

The temperature gauge shows engine coolant temperature. Any reading within the normal range indicates that the engine cooling system is operating satisfactorily.

The gauge pointer will likely indicate a higher temperature when driving in hot weather, up mountain grades, or when towing a trailer. It should not be allowed to exceed the upper limits of the normal operating range.

In the normal use of the car, the digital scale may move in different positions.

Instrument Cluster With EVIC/DID

The indicator light will illuminate, a message will display, and a chime will sound to indicate an excessive rise in the temperature of the engine coolant.

In the case of excessive rises in the temperature of the engine coolant, the engine may shut down. See an authorized dealer.

CAUTION!

Driving with a hot engine cooling system could damage your vehicle. If the temperature gauge reads "H" pull over and stop the vehicle. Idle the vehicle with the air conditioner turned off until the pointer drops back into the normal range. If the pointer remains on the "H", turn the engine off immediately and call an authorized dealer for service.

WARNING!

A hot engine cooling system is dangerous. You or others could be badly burned by steam or boiling coolant. You may want to call an authorized dealer for service if your vehicle overheats. If you decide to look under the hood yourself, see "Maintaining And Caring For Your Vehicle." Follow the warnings under the "Cooling System Pressure Cap" paragraph.

WARNING AND INDICATOR LIGHTS

IMPORTANT: The warning / indicator light switches on in the instrument panel together with a dedicated message and/or acoustic signal when applicable. These indications are indicative and precautionary and as such must not be considered as exhaustive and/or alternative to the information contained in the Owner Manual, which you are advised to read carefully in all cases. Always refer to the information in this chapter in the event of a failure indication.

All active telltales will display first if applicable. The system check menu may appear different based upon equipment options and current vehicle status. Some telltales are optional and may not appear.

Red Telltale Indicator Lights

Seat Belt Reminder Warning Light

Red Telltale Light	What It Means
	Seat Belt Reminder Warning Light When the ignition switch is first turned to ON/RUN, this light will turn on for four to eight seconds as a bulb check. During the bulb check, if the driver's seat belt is unbuckled, a chime will sound. After the bulb check or when driving, if the driver seat belt remains unbuckled, the Seat Belt Reminder Light will flash or remain on continuously and a chime will sound. Refer to "Occupant Restraints" in "Things To Know Before Starting Your Vehicle" for further information.

Air Bag Warning Light

Red Telltale Light	What It Means
	Air Bag Warning Light This light will turn on for four to eight seconds as a bulb check when the ignition switch is first turned to ON/RUN. If the light is either not on during starting, stays on, or turns on while driving, have the system inspected at an authorized dealer as soon as possible. This light will illuminate with a single chime when a fault with the Air Bag Warning Light has been detected, it will stay on until the fault is cleared. If the light comes on intermittently or remains on while driving, have an authorized dealer service the vehicle immediately. Refer to “Occupant Restraints” in “Things To Know Before Starting Your Vehicle” for further information.

Brake Warning Light

Red Telltale Light	What It Means
BRAKE United States Canada	**Brake Warning Light** This light monitors various brake functions, including brake fluid level and parking brake application. If the brake light turns on it may indicate that the parking brake is applied, that the brake fluid level is low, or that there is a problem with the anti-lock brake system reservoir. If the light remains on when the parking brake has been disengaged, and the fluid level is at the full mark on the master cylinder reservoir, it indicates a possible brake hydraulic system malfunction or that a problem with the Brake Booster has been detected by the Anti-Lock Brake System (ABS) / Electronic Stability Control (ESC) system. In this case, the light will remain on until the condition has been corrected. If the problem is related to the brake booster, the ABS pump will run when applying the brake, and a brake pedal pulsation may be felt during each stop.

The dual brake system provides a reserve braking capacity in the event of a failure to a portion of the hydraulic system. A leak in either half of the dual brake system is indicated by the Brake Warning Light, which will turn on when the brake fluid level in the master cylinder has dropped below a specified level.

The light will remain on until the cause is corrected.

NOTE: The light may flash momentarily during sharp cornering maneuvers, which change fluid level conditions. The vehicle should have service performed, and the brake fluid level checked.

If brake failure is indicated, immediate repair is necessary.

WARNING!

Driving a vehicle with the red brake light on is dangerous. Part of the brake system may have failed. It will take longer to stop the vehicle. You could have a collision. Have the vehicle checked immediately.

Vehicles equipped with the Anti-Lock Brake System (ABS) are also equipped with Electronic Brake Force Distribution (EBD). In the event of an EBD failure, the Brake Warning Light will turn on along with the ABS Light. Immediate repair to the ABS system is required.

Operation of the Brake Warning Light can be checked by turning the ignition switch from the OFF position to the ON/RUN position. The light should illuminate for approximately two seconds. The light should then turn off unless the parking brake is applied or a brake fault is detected. If the light does not illuminate, have the light inspected by an authorized dealer.

The light also will turn on when the parking brake is applied with the ignition switch in the ON/RUN position.

NOTE: This light shows only that the parking brake is applied. It does not show the degree of brake application.

Vehicle Security Warning Light — If Equipped

Red Telltale Light	What It Means
●	**Vehicle Security Warning Light** This light will flash at a fast rate for approximately 15 seconds when the vehicle security alarm is arming, and then will flash slowly until the vehicle is disarmed.

Oil Pressure Warning Light

Red Telltale Light	What It Means
	Oil Pressure Warning Light This light indicates low engine oil pressure. If the light turns on while driving, stop the vehicle and shut off the engine as soon as possible. A chime will sound when this light turns on. Do not operate the vehicle until the cause is corrected. This light does not indicate how much oil is in the engine. The engine oil level must be checked under the hood.

Oil Temperature Warning Light

Red Telltale Light	What It Means
	Oil Temperature Warning Light This telltale indicates engine oil temperature is high. If the light turns on while driving, stop the vehicle and shut off the engine as soon as possible.

Charging System Warning Light

Red Telltale Light	What It Means
	Charging System Warning Light This light shows the status of the electrical charging system. If the light stays on or comes on while driving, turn off some of the vehicle's nonessential electrical devices or increase engine speed (if at idle). If the charging system light remains on, it means that the vehicle is experiencing a problem with the charging system. Obtain SERVICE IMMEDIATELY. See an authorized dealer. If jump starting is required, refer to "Jump Starting Procedures" in "What To Do In Emergencies."

Electronic Throttle Control (ETC) Warning Light

Red Telltale Light	What It Means
	Electronic Throttle Control (ETC) Warning Light This light informs you of a problem with the Electronic Throttle Control (ETC) system. If a problem is detected while the engine is running, the light will either stay on or flash depending on the nature of the problem. Cycle the ignition key when the vehicle is safely and completely stopped and the shift lever is placed in the PARK position. The light should turn off. If the light remains on with the engine running, your vehicle will usually be drivable; however, see an authorized dealer for service as soon as possible. If the light continues to flash when the engine is running, immediate service is required and you may experience reduced performance, an elevated/rough idle, or engine stall and your vehicle may require towing. The light will come on when the ignition is first turned to ON/RUN and remain on briefly as a bulb check. If the light does not come on during starting, have the system checked by an authorized dealer.

Engine Temperature Warning Light

Red Warning Light	What It Means
	Engine Temperature Warning Light This light warns of an overheated engine condition. As engine coolant temperatures rise and the gauge approaches **H,** this indicator will illuminate and a single chime will sound after reaching a set threshold. If the light turns on while driving, safely pull over and stop the vehicle. If the A/C system is on, turn it off. Also, shift the transmission into NEUTRAL and idle the vehicle. If the temperature reading does not return to normal, turn the engine off immediately and call for service. Refer to “If Your Engine Overheats” in “What To Do In Emergencies” for further information.

Electric Power Steering Fail Warning — If Equipped

Red Telltale Light	What It Means
	Electric Power Steering Fail Warning This light is used to manage the electrical warning of the EPS (Power Steering System). Refer to “Power Steering” in “Starting and Operating” for further information.

Door Open Indicator Light

Red Telltale Light	What It Means
	Door Open Indicator Light This indicator will illuminate when one or more door(s) are not fully closed.

Hood Open Warning Light

Red Telltale Light	What It Means
	Hood Open Warning Light This indicator will illuminate when the hood is ajar/open and not fully closed.

Liftgate Open Warning Light

Red Telltale Light	What It Means
	Liftgate Open Warning Light This indicator will turn when the liftgate is open. **NOTE:** If the vehicle is moving there will also be a single chime.

Transmission Fault Warning Light

Red Telltale Light	What It Means
	Transmission Fault Warning Light This light will illuminate (together with a message in the EVIC and a buzzer) to indicate a transmission fault. Contact your authorized dealer if the message remains after restarting the engine.

Yellow Telltale Indicator Lights

Anti-Lock Brake (ABS) Indicator Light

Yellow Telltale Light	What It Means
(ABS)	**Anti-Lock Brake (ABS) Indicator Light** After the ignition is turned on, the Anti-Lock Brake System (ABS) light illuminates to indicate function check at vehicle startup. If the light remains on after startup or comes on and stays on at road speeds, it may indicate that the ABS has detected a malfunction or has become inoperative. The system reverts to standard non-anti-lock brakes. If both the Brake Warning Light and the ABS Warning Light are on, see an authorized dealer immediately. Refer to “Anti-Lock Brake System” in “Starting And Operating” for further information.

Tire Pressure Monitoring Indicator Light

Yellow Telltale Light	What It Means
	Tire Pressure Monitoring Indicator Light The warning light switches on and a message is displayed to indicate that the tire pressure is lower than the recommended value and/or that slow pressure loss is occurring. In these cases, optimal tire duration and fuel consumption may not be guaranteed. Should one or more tires be in the condition mentioned above, the display will show the indications corresponding to each tire in sequence.

IMPORTANT: Do not continue driving with one or more flat tires as handling may be compromised. Stop the vehicle, avoiding sharp braking and steering. Repair immediately using the dedicated tire repair kit and contact your authorized dealership as soon as possible.

Each tire, including the spare (if provided), should be checked monthly when cold and inflated to the inflation pressure recommended by the vehicle manufacturer on the vehicle placard or tire inflation pressure label. If your vehicle has tires of a different size than the size indicated on the vehicle placard or tire inflation pressure label, you should determine the proper tire inflation pressure for those tires.

As an added safety feature, your vehicle has been equipped with a Tire Pressure Monitoring System (TPMS) that illuminates a low tire pressure telltale when one or more of your tires is significantly under-inflated. Accordingly, when the low tire pressure telltale illuminates, you should stop and check your tires as soon as possible and inflate them to the proper pressure. Driving on a significantly under-inflated tire causes the tire to overheat and can lead to tire failure. Under-inflation also reduces fuel efficiency and tire tread life, and may affect the vehicle's handling and stopping ability.

Please note that the TPMS is not a substitute for proper tire maintenance, and it is the driver's responsibility to maintain correct tire pressure, even if under-inflation has not reached the level to trigger illumination of the TPMS low tire pressure telltale.

Your vehicle has also been equipped with a TPMS malfunction indicator to indicate when the system is not operating properly. The TPMS malfunction indicator is combined with the low tire pressure telltale. When the system detects a malfunction, the telltale will flash for approximately one minute and then remain continuously illuminated. This sequence will continue upon subsequent vehicle start-ups as long as the malfunction exists. When the malfunction indicator is illuminated, the system may not be able to detect or signal low tire pressure as intended. TPMS malfunctions may occur for a variety of reasons, including the installation of replacement or alternate tires or wheels on the vehicle that prevent the TPMS from functioning properly. Always check the TPMS malfunction telltale after replacing one or more tires or wheels on your vehicle, to ensure that the replacement or alternate tires and wheels allow the TPMS to continue to function properly.

CAUTION!

The TPMS has been optimized for the original equipment tires and wheels. TPMS pressures and warning have been established for the tire size equipped on your vehicle. Undesirable system operation or sensor damage may result when using replacement equipment that is not of the same size, type, and/or style. Aftermarket wheels can cause sensor damage. Using aftermarket tire sealants may cause the Tire Pressure Monitoring System (TPMS) sensor to become inoperable. After using an aftermarket tire sealant it is recommended that you take your vehicle to an authorized dealership to have your sensor function checked.

Electronic Stability Control (ESC) Indicator Light — If Equipped

Yellow Telltale Light	What It Means
	Electronic Stability Control (ESC) Indicator Light The "ESC Indicator Light" in the instrument cluster will come on when the ignition switch is turned to the ON/RUN position. It should go out with the engine running. If the "ESC Indicator Light" comes on continuously with the engine running, a malfunction has been detected in the ESC system. If this light remains on after several ignition cycles, and the vehicle has been driven several miles (kilometers) at speeds greater than 30 mph (48 km/h), see your authorized dealer as soon as possible to have the problem diagnosed and corrected. • The "ESC Off Indicator Light" and the "ESC Indicator Light" come on momentarily each time the ignition switch is turned to ON/RUN. • Each time the ignition is turned to ON/RUN, the ESC system will be ON, even if it was turned off previously. • The ESC system will make buzzing or clicking sounds when it is active. This is normal; the sounds will stop when ESC becomes inactive following the maneuver that caused the ESC activation.

Electronic Stability Control (ESC) OFF Indicator Light — If Equipped

Yellow Telltale Light	What It Means
OFF	**Electronic Stability Control (ESC) OFF Indicator Light** This light indicates the Electronic Stability Control (ESC) is off.

Engine Check/Malfunction Indicator Light (MIL)

Yellow Telltale Light	What It Means
	Engine Check/Malfunction Indicator Light (MIL) The Engine Check/Malfunction Indicator Light (MIL) is a part of an Onboard Diagnostic System called OBD II that monitors engine and automatic transmission control systems. The light will illuminate when the ignition is in the ON position before engine start. If the bulb does not come on when turning the key from OFF to ON/RUN, have the condition checked promptly. Certain conditions, such as a loose or missing gas cap, poor quality fuel, etc., may illuminate the light after engine start. The vehicle should be serviced if the light stays on through several typical driving styles. In most situations, the vehicle will drive normally and will not require towing. When the engine is running, the MIL may flash to alert serious conditions that could lead to immediate loss of power or severe catalytic converter damage. The vehicle should be serviced as soon as possible if this occurs.

CAUTION!

Prolonged driving with the Malfunction Indicator Light (MIL) on could cause damage to the engine control system. It also could affect fuel economy and driveability. If the MIL is flashing, severe catalytic converter damage and power loss will soon occur. Immediate service is required.

WARNING!

A malfunctioning catalytic converter, as referenced above, can reach higher temperatures than in normal operating conditions. This can cause a fire if you drive slowly or park over flammable substances such as dry plants, wood, cardboard, etc. This could result in death or serious injury to the driver, occupants or others.

Glow Plug Indicator Light — If Equipped

Yellow Telltale Light	What It Means
	Glow Plug Indicator Light To prevent possible engine damage while starting at low temperatures, this vehicle will inhibit engine cranking and this icon will blink when the ambient temperature is less than –35° C and the oil temperature sensor reading indicates an engine block heater has not been used. The message "plug in engine heater" will be displayed in the instrument cluster when the ambient temperature is below -32° C at the time the engine is shut off as a reminder.

Low Fuel Indicator Light

Yellow Telltale Light	What It Means
	Low Fuel Indicator Light When the fuel level reaches approximately 1.3–1.8 gal (5–7 L) this light will turn on, and remain on until fuel is added.

LaneSense Indicator Light — If Equipped

Yellow Telltale Light	What It Means
	LaneSense Indicator Light — If Equipped The LaneSense system provides the driver with visual and steering torque warnings when the vehicle starts to drift out of its lane unintentionally without the use of a turn signal. • When the LaneSense system senses a lane drift situation, the LaneSense indicator changes from solid green to solid yellow. • When the LaneSense system senses the lane has been approached and is in a lane departure situation, the LaneSense indicator changes from solid white/green to flashing yellow. Refer to “LaneSense - If Equipped” in “Understanding The Features Of Your Vehicle” for further information.

Vehicle Security Indicator Light

Yellow Telltale Light	What It Means
	Vehicle Security Indicator Light This indicator will illuminate when the Vehicle Theft Alarm system has detected an attempt was made to break into the vehicle.

Exterior Bulb Failure Indicator Light

Yellow Telltale Light	What It Means
	Exterior Bulb Failure Indicator Light This light will illuminate when there is a malfunction in one of the exterior bulbs.

Forward Collision Indicator Light — If Equipped

Yellow Telltale Light	What It Means
	Forward Collision Indicator Light This telltale will turn on warn you of a possible collision with the vehicle in front of you.

Forward Collision Warning Off Indicator Light — If Equipped

Yellow Telltale Light	What It Means
OFF	**Forward Collision Off Indicator Light** This light indicates the Forward Collision Warning is off.

Loose Fuel Filler Cap Indicator Light — If Equipped

Yellow Telltale Light	What It Means
	Loose Fuel Filler Cap Indicator Light This light will illuminate when fuel filler cap is loose. Properly close the filler cap to disengage the light. If the light does not turn off, please see your authorized dealer.

Audio System Failure Light — If Equipped

Yellow Telltale Light	What It Means
	Audio System Failure Light The telltale illuminates to report a failure of the Audio System. Contact your authorized dealership as soon as possible.

Green Telltale Indicator Lights

Turn Signal Indicator Lights

Green Telltale Light	What It Means
	Turn Signal Indicator Lights The instrument cluster arrow will flash independently for the LEFT or RIGHT turn signal as selected, as well as the exterior turn signal lamp(s) (front and rear) as selected when the multifunction lever is moved down (LEFT) or up (RIGHT).

Park/Headlight ON Indicator Light

Green Telltale Light	What It Means
	Park/Headlight ON Indicator Light This indicator will illuminate when the park lights or headlights are turned on.

Front Fog Indicator Light — If Equipped

Green Telltale Light	What It Means
	Front Fog Indicator Light This indicator will illuminate when the front fog lights are on.

Cruise Control Engaged Indicator Light

Green Telltale Light	What It Means
	Cruise Control Engaged Indicator Light This light will turn on when the cruise control has been engaged.

Blue Telltale Indicator Light

High Beam Indicator Light

Blue Telltale Light	What It Means
	High Beam Indicator Light This indicator shows that the high beam headlights are on. Push the multifunction control lever away from you to switch the headlights to high beam. Pull the lever toward you to switch the headlights back to low beam.

White Telltale Indicator Light

Electronic Speed Control ON Indicator Light

White Telltale Light	What It Means
	Electronic Speed Control ON Indicator Light This light will turn on when the electronic speed control is ON.

Cruise Control Cancelled Light

White Telltale Light	What It Means
	Cruise Control Cancelled Light This light will turn on when the cruise control has been cancelled by the driver. Refer to "Electronic Speed Control" in "Understanding The Features Of Your Vehicle" for further information.

ONBOARD DIAGNOSTIC SYSTEM (OBD II)

Your vehicle is equipped with a sophisticated onboard diagnostic system called OBD II. This system monitors the performance of the emissions, engine, and automatic transmission control systems. When these systems are operating properly, your vehicle will provide excellent performance and fuel economy, as well as engine emissions well within current government regulations.

If any of these systems require service, the OBD II system will turn on the "Malfunction Indicator Light (MIL)." It will also store diagnostic codes and other information to assist your service technician in making repairs. Although your vehicle will usually be drivable and not need towing, see your authorized dealer for service as soon as possible.

CAUTION!

- **Prolonged driving with the MIL on could cause further damage to the emission control system. It could also affect fuel economy and driveability. The vehicle must be serviced before any emissions tests can be performed.**
- **If the MIL is flashing, while the engine is running, severe catalytic converter damage and power loss will soon occur. Immediate service is required.**

Onboard Diagnostic System (OBD II) Cybersecurity

Your vehicle is required to have an Onboard Diagnostic system (OBD II) and a connection port to allow access to information related to the performance of your emissions controls. Authorized service technicians may need to access this information to assist with the diagnosis and service of your vehicle and emissions system.

WARNING!

- **ONLY an authorized service technician should connect equipment to the OBD II connection port in order to diagnose or service your vehicle.**
- **If unauthorized equipment is connected to the OBD II connection port, such as a driver-behavior tracking device, it may:**
  - **Be possible that vehicle systems, including safety related systems, could be impaired or a loss of vehicle control could occur that may result in an accident involving serious injury or death.**
  - **Access, or allow others to access, information stored in your vehicle systems, including personal information.**

For further information, refer to “Privacy Practices” and “Uconnect CyberSecurity” in “ All About Uconnect Access” in your Owner’s Manual Radio Supplement and “Cybersecurity” in “Multimedia” in your Owner’s Manual on the DVD.

ELECTRONIC VEHICLE INFORMATION CENTER (EVIC) / DRIVER INFORMATION DISPLAY (DID)

EVIC/DID Description

The vehicle can be equipped with multifunctional display (EVIC), or a reconfigurable multifunctional display (DID), which offers useful information to the driver.

With the ignition in the STOP/OFF position (and the key removed, for vehicles with mechanical key), opening/closing of a door will activate the display for viewing, and display the total miles or kilometers in the odometer.

Mapping And Reconfigurable Zone Display (EVIC) — If Equipped

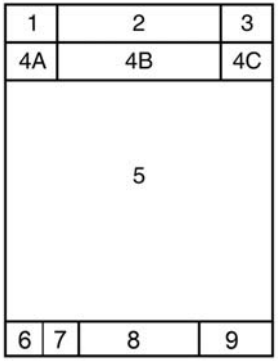

Mapping And Reconfigurable Zone Display

The display shows the following information, if equipped:

- **Zone (1)**
  - Date (Centered)
  - Compass (Centered)
  - Time (Centered)
  - External Temp. (Centered)
- **Zone (2)**
  - Actual Gear Indication (Centered)
  - PRND (Centered)
- **Zone (3)**
  - Date (Centered)
  - Compass (Centered)
  - Time (Centered)
  - External Temp. (Centered)
- **Zone (4)**
  - Audio Info (Centered)
  - Title (Centered)
  - Title Number (Centered)

- **Zone (4A)**
  - Title (Centered)
  - Browsing Arrows (Left)
  - Title Number (Right)
- **Zone (4B)**
  - Title (Centered)
- **Zone (4C)**
  - Title (Centered)
  - Browsing Arrows (Left)
  - Title Number (Right)
- **Zone (5)**
  - Trip and Fuel Label (Left)
  - Trip and Fuel Units (Left)
  - Trip and Fuel Value (Right)
  - Trip and Fuel Progress Bar (Centered)
  - Text (Left)
- **Zone (6)**
  - Red Telltale Lights
- **Zone (7)**
  - White Telltale Lights
- **Zone (8)**
  - Odometer Digits (Left)
  - Odometer Unit (Right)
  - Cruise Control Speed Set (Center)
  - Speed Buzzer (Right)
- **Zone (9)**
  - Yellow Telltale Lights

Mapping And Reconfigurable Zone Display (DID) — (If Equipped)

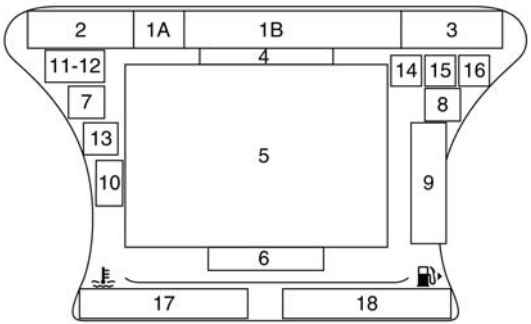

Mapping And Reconfigurable Zone Display (DID)

- **Zone (1)** – Includes 1A and 1B combined
  - TRIP Info (Centered)
  - Title (Centered)
  - Audio Info (Centered)
- **Zone (1A)**
  - Up and down arrow (Left)
  - Title number
- **Zone (1B)**
  - External Temp. (Centered)
  - Title (Centered)
  - Time (Centered)
- **Zones (1, 2 & 3)**
  - Date
  - Compass
  - Time
  - External Temp.
- **Zone (2)**
  - Double scale (Centered)

- **Zone (2 & 3)**
  - Ignition Button Info (Centered)
- **Zone (4)**
  - Speed Warning Title
- **Zone (5)**
  - Text (Centered)
  - Side Distance Warning
  - Park Sense: Front & Rear
- **Zone (6)**
  - Odometer Digits (Left)
  - Odometer Unit (Right)
  - Side Distance Warning
  - Park Sense: Front & Rear
- **Zone (7)**
  - Red Telltales (Centered)
- **Zone (8)**
  - Amber Telltales (Centered)
- **Zone (9)**
  - PRND (Centered)
  - Soft Telltale (Centered)
- **Zone (10)**
  - Hill Decent Control Telltale (Centered)
- **Zone (11–12)**
  - Telltales (Centered)
- **Zone (13)**
  - Forward Collision Telltale (Centered)
- **Zone (14)**
  - Soft Telltale (Centered)
  - Cruise Control ICON (Centered)
- **Zone (15)**
  - Cruise Control Value (Centered)

- **Zone (16)**
  - Soft Telltale (Centered)
  - Speed Buzzer (Right)
- **Zone (17)**
  - Active Park Sense
- **Zone (18)**
  - Active Park Sense

Oil Change Reset

Oil Change Due

Your vehicle is equipped with an engine oil change indicator system. The "Oil Change Due" message will display in the DID for five seconds after a single chime has sounded to indicate the next scheduled oil change interval. The engine oil change indicator system is duty cycle based, which means the engine oil change interval may fluctuate, dependent upon your personal driving style.

Unless reset, this message will continue to display each time you turn the ignition is cycled to the ON/RUN position. To reset the oil change indicator system (after performing the scheduled maintenance), refer to the following procedure.

1. Without pushing the brake pedal, push the ENGINE START/STOP button and cycle the ignition to the ON/RUN position (do not start the engine).
2. Fully depress the accelerator pedal, slowly, three times within 10 seconds.
3. Without pushing the brake pedal, push the ENGINE START/STOP button once to return the ignition to the OFF/LOCK position.

NOTE: If the indicator message illuminates when you start the vehicle, the oil change indicator system did not reset. If necessary, repeat this procedure.

EVIC/DID Control Buttons

The system allows the driver to select information by pushing the following buttons mounted on the steering wheel:

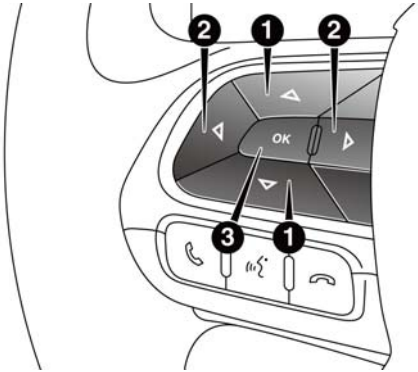

EVIC/DID Control Buttons

1 — Arrow Up/Down Scroll Through Menus And Submenus
2 — Arrow Right/Left Access Information/Submenu Screens
3 — OK Button For Selecting And Resetting Information

- *UP Arrow Button*

△ Push and release the UP arrow button to scroll upward through the main menu and submenus.

- *DOWN Arrow Button*

▽ Push and release the DOWN arrow button to scroll downward through the main menu and submenus.

- *RIGHT Arrow Button*

▷ Push and release the RIGHT arrow button to access the information screens or submenu screens of a main menu item.

- *BACK/LEFT Arrow Button*

◁ Push and release the LEFT arrow button to access the information screens or submenu screens of a main menu item.

- *OK Button*

The OK button may be used for the following:

Select

Reset (hold)

EVIC/DID Main Menu

The Main Menu is composed of several options that can be selected using the control buttons above.

NOTE:

- The display mode of the menu items varies depending on the type of display.
- For some items, a submenu is provided.
- In the Uconnect system, some items on the menu are not shown on the instrument panel display.

Menu Items

The Menu has the following options:

- Speedometer
- Vehicle Info
- Driver Assist
- Fuel Economy
- Trip
- Audio
- Messages
- Screen Setup
- Settings

Speedometer

Push and release the UP or DOWN arrow button until "Speedometer" is highlighted in the EVIC. Push the OK button to change the speedometer scale from MPH to km/h (km/h to MPH).

Vehicle Info

Push and release the UP or DOWN arrow button until "Vehicle Info" is highlighted in the EVIC/DID. Push and release the RIGHT arrow button and Coolant Temp will be displayed. Push the RIGHT or LEFT arrow button to scroll through the following information displays:

- ***Tire Pressure***

View the information relating to the TPMS system (if equipped).

- ***Coolant Temperature***

View the engine coolant temperature.

- ***Oil Temperature***

View the engine oil temperature.

- ***Battery Voltage***

View the voltage value (state of charge) of the battery.

- ***Service***

View the service status message(s).

Driver Assist

This menu item allows you to change the settings ("Notice LaneSense" and "Intensity LaneSense") relating to the LaneSense system (if equipped).

- ***Notice LaneSense***

By selecting this function, you can select the "readiness" of LaneSense, choosing between the options "Near," "Medium," or "Far."

- *Intensity LaneSense*

Using this function, you can select the force applied to the steering wheel to keep the car in the roadway through the electrical drive system due to LaneSense.

Fuel Economy

This menu item allows you to set the unit of measurement for the "Fuel Economy and Range."

- *Average Economy/Instantaneous Economy*

By selecting these options, you can choose the unit of measurement of the average fuel economy and the instantaneous, choosing between "MPG" or "l/100 km" or "km/l."

- *Range*

By selecting this option, you can choose the unit of measurement for Range, choosing between "km" or "miles."

Trip

This menu item allows you to view information about the "Trip Computer."

The information displayed, for Trip A and for Trip B, are:

- *Distance*

(Miles or Km)

- *Average Consumption*

(MPG, or l/ 100km or km/l)

- *Travel Time*

(Hour/Minute)

Audio

This menu item allows you to view the instrument cluster display and the information present on the display of the Uconnect system.

The information displayed is:

- ***"Radio (AM or FM)"***

View Radio Station Name (if equipped), frequency, and graphical icon

- ***"MP3"***

Title display or number song playing

- ***"USB"***

Title display or number song playing

- ***"Ipod"***

Display song title (if equipped)

See Phone

The instrument cluster display can also display the information concerning phone mode.

The information that can be displayed is the connection status of the mobile phone (phone connected or disconnected), the active telephone calls/incoming/on hold, and the management of double calls (first incoming second waiting, etc.).

Messages

This menu item allows you to display the information messages/malfunction stored.

Vehicles With Multi-Functional Display Reconfigurable

The background color of the display varies according to the priorities of the failure:

- ***Failed Messages with low priority***

Displays in yellow

- ***Failed Messages with high priority***

Displays in red

Screen Setup

This menu item allows you to change the position of the information on the display.

Display Gears (Vehicles With Reconfigurable Multi-Functional Display And Automatic Transmission)

By selecting this item, you can select the display mode, the particulars relating to the automatic transmission, and choose between the following options:

- *"Single digit"*

The right side of the display will show the letter concerning the automatic transmission shift lever (P,N,R or D) position. After approximately two seconds, the letter will be displayed in a central position.

- *"Full PNRD"*

(Default): The right side of the display the letters PNRD, the position assumed by the shift lever will be highlighted in the display. During the operation in sequential mode ("AutoStick"), in place of the letter D, the gear will be will be displayed.

In The Upper-Left/Top Right

The information relating to the following can be displayed:

- External temperature
- Compass (If Equipped)

- Date (Month/Day)
- Time (Hours/Minutes)

In the central area of the display, you can view all of the information listed above as well as the following:

- Audio Information
- Speed Display (If Equipped)
- Date (Day/Month/Year)
- Range To Empty
- Menu Item
- Average Consumption
- Current Consumption
- Distance Traveled (Trip)
- Distance Traveled B (Trip B)

Restore Default Settings

Selecting this item, and you can reset and restore the default settings.

Settings

This menu item allows you to change the settings for the following:

- Display
- Units
- Clock and Date
- Security
- Safety and Assistance
- Lights
- Doors and Locks
- Compass (If Equipped)

Vehicles Equipped With Multifunctional Display Reconfigurable: Menu items "Display" (you can select only the items "See Phone" and "See Navigation," "Security," and "Safety & Assistance" (only "Volume Alerts" is selectable) are present.

All other entries are displayed and selected on the display of the Uconnect system.

"Display"

By selecting the "Display," you can access the following settings:

- **Language**: allows you to select the language in which to display the information/warnings.
- **Phone Repetition:** allows you to view, on the instrument cluster display, the information relating to Phone mode displayed on the display of the Uconnect system.
- **NAV Turn By Turn:** allows you to view, on the instrument cluster display, information relating to the navigation mode.

"Units Of Measure"

By selecting the item "Units of measure," you can select the unit of measure to use for displaying various magnitudes.

Possible options are:

- US
- Metric
- Custom

"Clock & Data"

By selecting the item, "Clock & Data" you can adjust the clock.

Possible options are:

- Set Time: adjust hours/minutes
- Set Format: adjust the time format "12h" (12 hours) or " 24h" (24 hours)
- Set Date: adjust day/month/year

Security

By selecting the item "Security," you can make the following adjustments:

- ***Speed Warning:***

Set the vehicle speed limit (km/h or mph), which the driver is notified through a visual and acoustic signaling (display of a message and a symbol on the display).

When the speed warning is set, the icon should remain visualized for the same duration time of the pop up. If the driver exceeded the speed set the icon should remain for however long the vehicle is over the set speed.

Driver may also turn the Speed Warning "OFF" should you choose not to use this feature.

- ***Seat Belt Reminder:***

This function is only viewable when the Seat Belt Reminder (SBR) system is active.

- ***Hill Start Assist:***

Activation/Deactivation of the Hill Start Assist system.

"Safety & Assistance"

By selecting the item "Safety & Assistance," you can make the following adjustments:

- FCW: a selection of operating modes of the system Forward Collision Warning Plus

- FCW Sensitivity: a selection of the "readiness" of intervention of the Forward Collision Warning Plus system, based on the distance to the obstacle
- ParkSense: a selection of the type of information provided by ParkSense
- Rear Parks. Vol.: selection of the volume of acoustic signals provided by ParkSense
- ParkSense Vol.: a selection of the volume of acoustic signals provided by ParkSense
- Front Parks. Vol.: selection of the volume of the beeps provided by ParkSense
- Side Dist. Warn. Vol. (If equipped) : a selection of the volume of the beeps of SideSense system
- Side Dist. Warn. (if Equipped) : Select the type of reporting provided by SideSense system
- Auto Wipers: enabling/disabling the automatic operation of wipers in the event of rain
- LaneSense Warn.: a selection of the "readiness" of intervention of LaneSense
- LaneSense Force: selection of the force to be applied to the steering wheel to put the car in the roadway through the system of electrical drive, in case of operation of the system LaneSense
- Buzzer Volume
- Maintenance Brakes (If Equipped): activation of the procedure to carry out braking system maintenance
- Auto Park Brake (If Equipped): enable/disable auto-insertion of the Electric Parking Brake

"Lights"

By selecting the item "Lights," you can make the following adjustments:

- Headlight Off Delay: set the delay for headlight shutoff after engine shutoff
- Headlight Sensitivity: adjust the sensitivity of headlight brightness
- Daytime Running Lights: activate/deactivate the daytime running lights
- Cornering lights: activate/deactivate the cornering lights (If Equipped)
- Automatic High Beam: activate/deactivate the automatic main beam headlights (If Equipped)

"Doors & Locks"

By selecting the item "Doors & Locks," you can make the following adjustments:

- Auto Door Lock: activate/deactivate the automatic locking of the doors with the vehicle moving
- Auto Unlock On Exit: automatic unlocking of the doors when exiting the vehicle
- Flash Light with Lock: activate the direction indicators when closing the doors
- Sound Horn With Lock: activate/deactivate the horn when pressing the LOCK button on the RKE. The options are "Off," "First Press," and "Second Press."
- Horn With Remote Start: activate/deactivate the horn at the Remote Starting of the engine with the RKE.

- Unlock On First Press Of Key Fob (vehicles without Passive Entry): allows you to choose whether to unlock all the doors or only the driver's side door on the first push of the UNLOCK button on the RKE
- Remote Door Unlock: allows you to open the driver door only on the first push of the UNLOCK button on the RKE
- Passive Entry (If Equipped) : activate the automatic locking of the doors

"Compass"

By selecting the item "Compass," you can view and change the following settings:

- Calibration
- Variance

Calibration

The compass calibrates itself automatically, so you may not need any initial calibration. It is required to confirm the calibration by pressing the OK button and drive in one or more 360–degree turns (in an area free from large metal or metallic objects). The compass will now function normally.

Variance

Compass Variance is the difference between Magnetic North and Geographic North. To compensate for the differences, the variance should be set for the zone where the vehicle is driven, per the zone map. Once properly set, the compass will automatically compensate for the differences and provide the most accurate compass heading.

NOTE: Keep magnetic materials away from the top of the instrument panel, such as iPod's, Mobile Phones, Laptops, and Radar Detectors. This is where the compass module is located, and it can cause interference with the compass sensor, and it may give false readings.

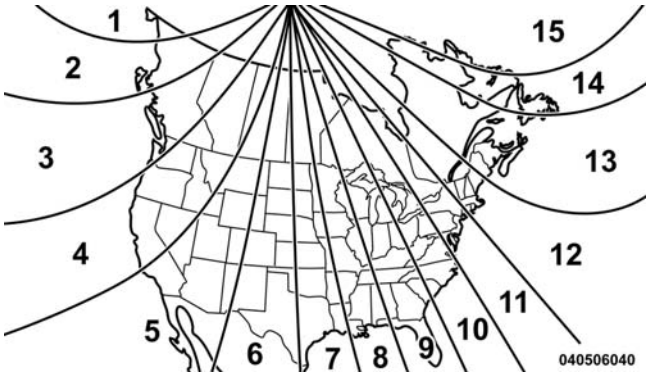

Compass Variance Map

TRIP COMPUTER

The Trip computer is used to display information on car operation when the key is turned to the MAR/RUN position.

This function allows you to define two separate trips called "Trip A" and "Trip B" where the car's "complete trips" are monitored in an independent manner.

Both trips can be reset (reset - start of a new trip). To perform a reset, push and hold the OK button on the steering wheel controls.

"Trip A" is used to display the figures relating to:

- Distance Travelled
- Average Consumption
- Travel Time (driving time)
- Average Speed

Quantities Displayed

Distance Travelled

Indicates the distance travelled by the start of the new trip.

Average Consumption

Represents the average fuel consumption since the start of the new trip.

Average Speed

Represents the average speed since the start of the new trip.

Travel Time

Elapsed time since the start of the new trip.

OK Button

Short Push Of The Button: display of various parameters.

Long Push Of The Button: reset quantities and begin a new trip.

New trip

Starts after reset:

- ″Manual″ by pushing the OK button.
- ″Automatic″ when the ″distance″ reaches the value is 62140 (99999.9 km) or when the ″time travel″ reaches the value of 999.59 (999 hours and 59 minutes).
- After each disconnection and reconnection of the battery.

SAFETY

CONTENTS

■ BRAKE SYSTEM 239

■ ELECTRONIC BRAKE CONTROL SYSTEM 240

- □ Anti-Lock Brake System (ABS) 241
- □ Traction Control System (TCS) 244
- □ Brake Assist System (BAS) 244
- □ Electronic Roll Mitigation (ERM) 245
- □ Hill Start Assist (HSA) 246
- □ Hill Descent Control (HDC) — If Equipped . . .247
- □ Electronic Stability Control (ESC) 250
- □ ESC Activation/Malfunction Indicator Light And ESC OFF Indicator Light 255
- □ Trailer Sway Control (TSC) 256
- □ Dynamic Steering Torque (DST) 257

■ OCCUPANT RESTRAINT SYSTEMS 258

- □ Important Safety Precautions 258
- □ Seat Belt Systems 259
- □ Supplemental Restraint System (SRS) 274
- □ Child Restraints 291
- □ Transporting Pets 312

■ SAFETY TIPS 312
- □ Transporting Passengers 312
- □ Exhaust Gas 313
- □ Safety Checks You Should Make Inside The Vehicle 314
- □ Periodic Safety Checks You Should Make Outside The Vehicle 316

BRAKE SYSTEM

BRAKE

Your vehicle is equipped with dual hydraulic brake systems. If either of the two hydraulic systems loses normal capability, the remaining system will still function. However, there will be some loss of overall braking effectiveness. This will be evident by increased pedal travel during application and greater pedal force required to slow or stop the vehicle. In addition, if the malfunction is caused by a leak in the hydraulic system, the "Brake Warning Light" will turn on as the brake fluid level drops in the master cylinder.

In the event power assist is lost for any reason (i.e., repeated brake applications with the engine OFF) the brakes will still function. However, the effort required to brake the vehicle will be much greater than that required with the power system operating.

WARNING!

- **Riding the brakes can lead to brake failure and possibly a collision. Driving with your foot resting or riding on the brake pedal can result in abnormally high brake temperatures, excessive lining wear, and possible brake damage. You would not have your full braking capacity in an emergency.**
- **Driving a vehicle with the "Brake Warning Light" on is dangerous. A significant decrease in braking performance or vehicle stability during braking may occur. It will take you longer to stop the vehicle or will make your vehicle harder to control. You could have a collision. Have the vehicle checked immediately.**

ELECTRONIC BRAKE CONTROL SYSTEM

This system enhances directional control and stability of the vehicle under various driving conditions. ESC corrects for oversteering or understeering of the vehicle by applying the brake of the appropriate wheel to assist in counteracting the oversteer or understeer condition. Engine power may also be reduced to help the vehicle maintain the desired path.

ESC uses sensors in the vehicle to determine the vehicle path intended by the driver and compares it to the actual path of the vehicle. When the actual path does not match the intended path, ESC applies the brake of the appropriate wheel to assist in counteracting the oversteer or understeer condition.

- Oversteer - when the vehicle is turning more than appropriate for the steering wheel position.
- Understeer - when the vehicle is turning less than appropriate for the steering wheel position.

The "ESC Activation/Malfunction Indicator Light" located in the instrument cluster will start to flash as soon as the tires lose traction and the ESC system becomes active. The "ESC Activation/Malfunction Indicator Light" also flashes when the TCS is active. If the "ESC Activation/Malfunction Indicator Light" begins to flash during acceleration, ease up on the accelerator and apply as little throttle as possible. Be sure to adapt your speed and driving to the prevailing road conditions.

WARNING!

- **The Electronic Stability Control (ESC) cannot prevent the natural laws of physics from acting on the vehicle, nor can it increase the traction afforded by prevailing road conditions. ESC cannot prevent all**

(Continued)

WARNING! *(Continued)*

accidents, including those resulting from excessive speed in turns, driving on very slippery surfaces, or hydroplaning. ESC also cannot prevent collisions resulting from loss of vehicle control due to inappropriate driver input for the conditions. Only a safe, attentive, and skillful driver can prevent accidents. The capabilities of an ESC equipped vehicle must never be exploited in a reckless or dangerous manner which could jeopardize the user's safety or the safety of others.

- **Vehicle modifications, or failure to properly maintain your vehicle, may change the handling characteristics of your vehicle, and may negatively affect the performance of the ESC system. Changes to the steering system, suspension, braking system, tire type and size or wheel size may adversely affect**

(Continued)

WARNING! *(Continued)*

ESC performance. Improperly inflated and unevenly worn tires may also degrade ESC performance. Any vehicle modification or poor vehicle maintenance that reduces the effectiveness of the ESC system can increase the risk of loss of vehicle control, vehicle rollover, personal injury and death.

Anti-Lock Brake System (ABS)

The Anti-Lock Brake System (ABS) is designed to aid the driver in maintaining vehicle control under adverse braking conditions. The system operates with a separate computer to modulate hydraulic pressure, to prevent wheel lock-up and help avoid skidding on slippery surfaces.

All vehicle wheels and tires must be the same size and type, and tires must be properly inflated, to produce accurate signals for the computer.

WARNING!

Significant over or under-inflation of tires or mixing sizes of tires or wheels on the vehicle can lead to loss of braking effectiveness.

The ABS conducts a low-speed self-test at approximately 12 mph (20 km/h). If you have your foot lightly on the brake while this test is occurring, you may feel slight pedal movement. The movement can be more apparent on ice and snow. This is normal.

The ABS pump motor runs during the self-test at 12 mph (20 km/h) and during an ABS stop. The pump motor makes a low humming noise during operation, which is normal.

WARNING!

- **Pumping of the Anti-Lock Brakes will diminish their effectiveness and may lead to a collision. Pumping makes the stopping distance longer. Just press firmly on your brake pedal when you need to slow down or stop.**
- **The ABS cannot prevent the natural laws of physics from acting on the vehicle, nor can it increase braking or steering efficiency beyond that afforded by the condition of the vehicle brakes and tires or the traction afforded.**
- **The ABS cannot prevent collisions, including those resulting from excessive speed in turns, following another vehicle too closely, or hydroplaning.**
- **The capabilities of an ABS equipped vehicle must never be exploited in a reckless or dangerous manner, which could jeopardize the user's safety or the safety of others.**

CAUTION!

The ABS is subject to possible detrimental effects of electronic interference caused by improperly installed aftermarket radios or telephones.

NOTE: During severe braking conditions, a pulsing sensation may occur and a clicking noise will be heard. This is normal, indicating that the ABS is functioning.

- Do not "ride" the brakes by resting your foot on the pedal. This could overheat the brakes and result in unpredictable braking action, longer stopping distances, or brake damage.
- When descending mountains or hills, repeated braking can cause brake fade with loss of braking control. Avoid repeated heavy braking by downshifting the transmission or locking out overdrive whenever possible.
- Engines may idle at higher speeds during warm-up, which could cause rear wheels to spin and result in loss of vehicle control. Be especially careful while driving on slippery roads, in close-quarter maneuvering, parking, or stopping.
- Do not drive too fast for road conditions, especially when roads are wet or slushy. A wedge of water can build up between the tire tread and the road. This hydroplaning action can cause loss of traction, braking ability, and control.
- After going through deep water or a car wash, brakes may become wet, resulting in decreased performance and unpredictable braking action. Dry the brakes by gentle, intermittent pedal action while driving at very slow speeds.

Traction Control System (TCS)

This system monitors the amount of wheel spin of each of the driven wheels. If wheel spin is detected, brake pressure is applied to the slipping wheel(s) and engine power is reduced to provide enhanced acceleration and stability. A feature of the TCS system, Brake Limited Differential (BLD), functions similar to a limited slip differential and controls the wheel spin across a driven axle. If one wheel on a driven axle is spinning faster than the other, the system will apply the brake of the spinning wheel. This will allow more engine torque to be applied to the wheel that is not spinning. This feature remains active even if TCS and ESC are in the "Partial Off" mode or the "Full Off" mode. Refer to "Electronic Stability Control (ESC)" in this section for further information.

Brake Assist System (BAS)

The BAS is designed to optimize the vehicle's braking capability during emergency braking maneuvers. The system detects an emergency braking situation by sensing the rate and amount of brake application and then applies optimum pressure to the brakes. This can help reduce braking distances. The BAS complements the Anti-Lock Brake System (ABS). Applying the brakes very quickly results in the best BAS assistance. To receive the benefit of the system, you must apply continuous braking pressure during the stopping sequence, (do not "pump" the brakes). Do not reduce brake pedal pressure unless braking is no longer desired. Once the brake pedal is released, the BAS is deactivated.

WARNING!

The Brake Assist System (BAS) cannot prevent the natural laws of physics from acting on the vehicle, nor can it increase the traction afforded by prevailing road conditions. BAS cannot prevent collisions, including those resulting from excessive speed in turns, driving on very slippery surfaces, or hydroplaning. The capabilities of a BAS-equipped vehicle must never be exploited in a reckless or dangerous manner, which could jeopardize the user's safety or the safety of others.

Electronic Roll Mitigation (ERM)

This system anticipates the potential for wheel lift by monitoring the driver's steering wheel input and the speed of the vehicle. When ERM determines that the rate of change of the steering wheel angle and vehicle's speed are sufficient to potentially cause wheel lift, it then applies the appropriate brake and may also reduce engine power to lessen the chance that wheel lift will occur. ERM will only intervene during very severe or evasive driving maneuvers. ERM can only reduce the chance of wheel lift occurring during severe or evasive driving maneuvers. It cannot prevent wheel lift due to other factors, such as road conditions, leaving the roadway, or striking objects or other vehicles.

NOTE: ERM is disabled anytime the ESC is in "Full Off" mode. Refer to Electronic Stability Control (ESC) in this section for a complete explanation of the available ESC modes.

WARNING!

Many factors, such as vehicle loading, road conditions, and driving conditions, influence the chance that wheel lift or rollover may occur. Electronic Roll

(Continued)

WARNING! *(Continued)*

Mitigation (ERM) cannot prevent all wheel lift or rollovers, especially those that involve leaving the roadway or striking objects or other vehicles. The capabilities of an ERM-equipped vehicle must never be exploited in a reckless or dangerous manner, which could jeopardize the user's safety or the safety of others.

Hill Start Assist (HSA)

The HSA system is designed to help the driver accelerate the vehicle from a complete stop while on an incline. If the driver releases the brake while stopped on an incline, HSA will continue to hold the brake pressure for a short period. If the driver does not apply the throttle before this time expires, the system will release brake pressure and the vehicle will roll down the hill as normal. The system will release brake pressure in proportion to amount of throttle applied.

The following conditions must be met in order for HSA to activate:

- The vehicle must be stopped.
- The vehicle must be on a 5% (approximate) grade or greater hill.
- The gear selection must match vehicle uphill direction (i.e., vehicle facing uphill is in forward gear; vehicle backing uphill is in REVERSE gear).
- For vehicles equipped with an automatic transmission, the HSA will work in REVERSE gear and all forward gears. The system will not activate if the transmission is in PARK.

WARNING!

There may be situations where the Hill Start Assist (HSA) will not activate and slight rolling may occur, such as on minor hills or with a loaded vehicle, or while pulling a trailer. HSA is not a substitute for active driving involvement. It is always the driver's responsibility to be attentive to distance to other vehicles, people, and objects, and most importantly brake operation to ensure safe operation of the vehicle under all road conditions. Your complete attention is always required while driving to maintain safe control of your vehicle. Failure to follow these warnings can result in a collision or serious personal injury.

Hill Descent Control (HDC) — If Equipped

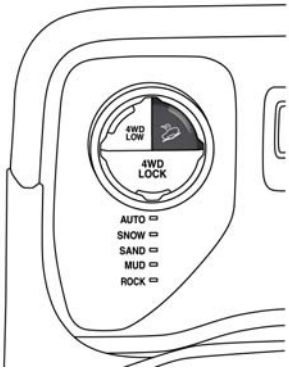

Hill Descent Control (Trailhawk)

HDC is intended for low speed off road driving while in 4WD Low Range. HDC maintains vehicle speed while descending hills during various driving situations. HDC controls vehicle speed by actively controlling the brakes.

HDC has three states:

1. Off (feature is not enabled and will not activate).
2. Enabled (feature is enabled and ready but activation conditions are not met, or driver is actively overriding with brake or throttle application).
3. Active (feature is enabled and actively controlling vehicle speed).

Enabling HDC

HDC is enabled by pushing the HDC switch, but the following conditions must also be met to enable HDC:

- Driveline is in 4WD Low Range.
- Vehicle speed is below 7.5 mph (12 km/h).
- Electric Park Brake (EPB) is released.
- Driver door is closed.

Activating HDC

Once HDC is enabled, it will activate automatically if driven down a grade of sufficient magnitude (greater than approximately 8%). The set speed for HDC is selectable by the driver and can be adjusted using brake and throttle input.

Driver Override:

The driver may override HDC activation with throttle or brake application at anytime.

Deactivating HDC

HDC will be deactivated but remain available if any of the following conditions occur:

- Driver overrides HDC set speed with throttle or brake application.
- Vehicle speed exceeds 7.5 mph (12 km/h) but remains below 25 mph (40 km/h).

- Vehicle is on a downhill grade of insufficient magnitude (less than approximately 8%), is on level ground, or is on an uphill grade.
- Vehicle is shifted to PARK.

Disabling HDC

HDC will be deactivated and disabled if any of the following conditions occur:

- The driver pushes the HDC switch.
- The driveline is shifted out of 4WD Low Range.
- Driver door opens.
- The vehicle is driven greater than 25 mph (40 km/h) (HDC exits immediately.)

Feedback To The Driver:

The instrument cluster has an HDC icon and the HDC switch has an LED which offer feedback to the driver about the state HDC is in.

- The cluster icon and switch lamp will illuminate and remain solid when HDC is enabled or activated. This is the normal operating condition for HDC.
- The switch lamp will flash for several seconds then extinguish when the driver pushes the HDC switch when enable conditions have not been met.

The Hill Descent Switch is located within the Selec-Terrain knob in the upper right position.

WARNING!

HDC is only intended to assist the driver in controlling vehicle speed when descending hills. The driver must remain attentive to the driving conditions and is responsible for maintaining a safe vehicle speed.

Electronic Stability Control (ESC)

This system enhances directional control and stability of the vehicle under various driving conditions. ESC corrects for oversteering or understeering of the vehicle by applying the brake of the appropriate wheel to assist in counteracting the oversteer or understeer condition. Engine power may also be reduced to help the vehicle maintain the desired path.

ESC uses sensors in the vehicle to determine the vehicle path intended by the driver and compares it to the actual path of the vehicle. When the actual path does not match the intended path, ESC applies the brake of the appropriate wheel to assist in counteracting the oversteer or understeer condition.

- Oversteer - when the vehicle is turning more than appropriate for the steering wheel position.
- Understeer - when the vehicle is turning less than appropriate for the steering wheel position.

The "ESC Activation/Malfunction Indicator Light" located in the instrument cluster will start to flash as soon as the tires lose traction and the ESC system becomes active. The "ESC Activation/Malfunction Indicator Light" also flashes when the TCS is active. If the "ESC Activation/Malfunction Indicator Light" begins to flash during acceleration, ease up on the accelerator and apply as little throttle as possible. Be sure to adapt your speed and driving to the prevailing road conditions.

WARNING!

- **The Electronic Stability Control (ESC) cannot prevent the natural laws of physics from acting on the vehicle, nor can it increase the traction afforded by prevailing road conditions. ESC cannot prevent all accidents, including those resulting from excessive speed in turns, driving on very slippery surfaces, or**

(Continued)

WARNING! ***(Continued)***

hydroplaning. ESC also cannot prevent collisions resulting from loss of vehicle control due to inappropriate driver input for the conditions. Only a safe, attentive, and skillful driver can prevent accidents. The capabilities of an ESC equipped vehicle must never be exploited in a reckless or dangerous manner which could jeopardize the user's safety or the safety of others.

- **Vehicle modifications, or failure to properly maintain your vehicle, may change the handling characteristics of your vehicle, and may negatively affect the performance of the ESC system. Changes to the steering system, suspension, braking system, tire type and size or wheel size may adversely affect**

(Continued)

WARNING! ***(Continued)***

ESC performance. Improperly inflated and unevenly worn tires may also degrade ESC performance. Any vehicle modification or poor vehicle maintenance that reduces the effectiveness of the ESC system can increase the risk of loss of vehicle control, vehicle rollover, personal injury and death.

ESC Operation Modes

To disable ESC and other safety systems, follow the instruction below.

There are three modes of active safety systems present on the vehicle:

- ESC On
- Partial Off
- Full Off

ESC On – Two Wheel Drive Vehicles And Four Wheel Drive Vehicles In 2WD And 4WD High Range

This is the normal operating mode for ESC when operating a two-wheel drive vehicle. It is also the normal mode for operating a four-wheel drive vehicle in 2WD or 4WD HIGH range. The ESC system will be in "ESC On" mode whenever the vehicle is started or the power transfer unit (if equipped) is shifted out of 4WD LOW range. This mode should be used for most driving situations. ESC should only be turned to "Partial Off" or "Full Off" for specific reasons as noted. Refer to "Partial Off" and to "Full Off" for additional information.

NOTE: It is recommended to select the mode "Partial Off" or "Full Off" only for specific reasons.

Partial Off – Two Wheel Drive Vehicles And Four Wheel Drive Vehicles In 2WD And 4WD High Range

The "Partial Off" mode is intended for driving in deep snow, sand, or gravel. This mode raises the threshold for TCS and ESC activation, which allows for more wheel spin than what ESC normally allows.

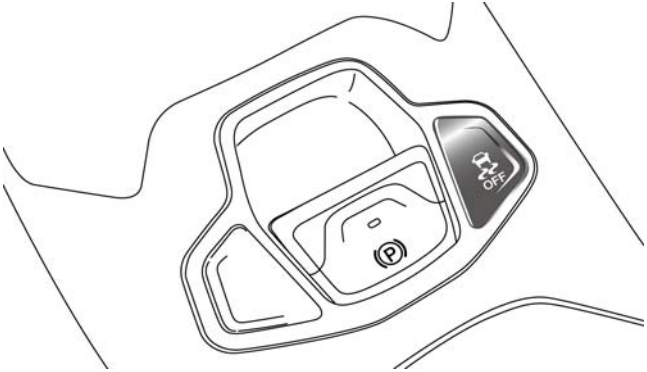

ESC OFF Button

To enter the "Partial Off" mode, momentarily push the "ESC Off" button and the ESC Off indicator light will illuminate. To turn the ESC on again, momentarily push the ESC OFF button and the ESC Off indicator light will turn off. This will restore the normal "ESC On" mode of operation.

NOTE: To improve the vehicle's traction when driving with snow chains, or when starting off in deep snow, sand, or gravel, it may be desirable to switch to the "Partial Off" mode by momentarily pushing the "ESC Off" button. Once the situation requiring "Partial Off" mode is overcome, turn ESC back on by momentarily pushing the "ESC Off" button. This may be done while the vehicle is in motion.

WARNING!

- **When in "Partial Off" mode, the TCS functionality of ESC, (except for the limited slip feature described in the TCS section), has been disabled and the "ESC Off Indicator Light" will be illuminated. When in "Partial Off" mode, the engine power reduction feature of TCS is disabled, and the enhanced vehicle stability offered by the ESC system is reduced.**
- **Trailer Sway control (TSC) is disabled when the ESC system is in the "Partial Off" mode.**

Full Off – Four-Wheel Drive Vehicles In 4WD High And 4WD Low Range

The "Full Off" mode is intended for off-highway and off-road use when ESC stability features could inhibit vehicle maneuverability due to trail conditions. The "ESC Off" button is located in the lower switch bank above the climate control panel. To enter "Full Off" mode, push and hold the "ESC Off" button for five seconds while the vehicle is stopped with the engine running. After five seconds, the ESC Off indicator light will illuminate and an "ESC Off" message will appear in the odometer.

In this mode, ESC and TCS are turned off (except for the "limited slip" feature described in the TCS section) until the vehicle reaches a speed of 40 mph (64 km/h). At speeds over 40 mph (64 km/h), the system automatically switches to "Partial Off" mode, described above. When the vehicle speed returns to less than 35 mph (56 km/h), the ESC system will return to "Full Off" mode. The ESC OFF indicator light is always illuminated when ESC is off. To turn ESC on again, momentarily push the "ESC Off" button. This will restore the normal "ESC On" mode of operation.

NOTE: With the ESC switched off, the enhanced vehicle stability offered by ESC is unavailable. In an emergency evasive maneuver, the ESC system will not engage to assist in maintaining stability. "Full Off" mode is only intended for off-highway or off-road use.

NOTE:

- "Full Off" is the only operating mode for ESC in 4WD LOW range. The ESC system will be in this mode whenever the vehicle is started in 4WD LOW range or the power transfer unit is shifted into 4WD LOW range.

- The "ESC OFF" message will display and a chime will sound when the shift lever is moved from any position to the PARK position and then moved out of the PARK position. This will occur even if the message was cleared previously.

Selec-Terrain — If Equipped

On models equipped with Selec-Terrain, the activation of some driving modes provide partial off or full off of some active safety systems in order to optimize performance in specific modes.

Partial or full off of the active safety systems will be indicated by a light in the instrument cluster.

In "SAND" and "MUD" the active safety systems are partially disabled and put in place to ensure maximum performance in the specific mode of operation. However, you can reactivate them completely at any time by pushing the button.

NOTE: In 4WD LOW, the active safety systems are completely bypassed in order to ensure maximum off-road performance.

ESC Activation/Malfunction Indicator Light And ESC OFF Indicator Light

The "ESC Activation/Malfunction Indicator Light" in the instrument cluster will come on when the ignition switch is turned to the ON position. It should go out with the engine running. If the "ESC Activation/Malfunction Indicator Light" comes on continuously with the engine running, a malfunction has been detected in the ESC system. If this light remains on after several ignition cycles, and the vehicle has been driven several miles/kilometers at speeds greater than 30 mph (48 km/h), see your authorized dealer as soon as possible to have the problem diagnosed and corrected.

The “ESC Activation/Malfunction Indicator Light” (located in the instrument cluster) starts to flash as soon as the tires lose traction and the ESC system becomes active. The “ESC Activation/Malfunction Indicator Light” also flashes when Traction Control System is active. If the “ESC Activation/Malfunction Indicator Light” begins to flash during acceleration, ease up on the accelerator and apply as little throttle as possible. Be sure to adapt your speed and driving to the prevailing road conditions.

NOTE:

- The “ESC Activation/Malfunction Indicator Light” and the “ESC OFF Indicator Light” come on momentarily each time the ignition switch is turned ON.
- Each time the ignition is turned ON, the ESC system will be ON even if it was turned off previously.
- The ESC system will make buzzing or clicking sounds when it is active. This is normal; the sounds will stop when ESC becomes inactive following the maneuver that caused the ESC activation.

The ″ESC OFF Indicator Light″ indicates the Electronic Stability Control (ESC) is partially off or full off.

The ESC OFF switch is located in the center console.

Trailer Sway Control (TSC)

TSC uses sensors in the vehicle to recognize an excessively swaying trailer and will take the appropriate actions to attempt to stop the sway. The system may reduce engine power and apply the brake of the appropriate wheel(s) to counteract the sway of the trailer. TSC will become active automatically once an excessively swaying trailer is recognized.

NOTE: TSC cannot stop all trailers from swaying. Always use caution when towing a trailer and follow the trailer tongue weight recommendations. Refer to "Trailer Towing" in this section for further information. When TSC is functioning, the "ESC Activation/Malfunction Indicator Light" will flash, the engine power may be reduced and you may feel the brakes being applied to individual wheels to attempt to stop the trailer from swaying. TSC is disabled when the ESC system is in the "Partial Off" mode.

WARNING!

If TSC activates while driving, slow the vehicle down, stop at the nearest safe location, and adjust the trailer load to eliminate trailer sway.

Dynamic Steering Torque (DST)

The DST function uses the integration of the ESC system with the electric power steering to increase the safety level of the whole car. In critical situations (understeering, oversteering, braking with different grip conditions), through the DST function the ESC system controls the steering to implement an additional torque contribution on the steering wheel, to suggest the most correct maneuver to the driver. The coordinated action of brakes and steering increases the safety and car control feeling.

NOTE: The DST is a driving aid system and does not replace the driver's actions while driving the car.

OCCUPANT RESTRAINT SYSTEMS

Some of the most important safety features in your vehicle are the restraint systems:

- Seat Belt Systems
- Supplemental Restraint Systems (SRS) Air Bags
- Child Restraints

Important Safety Precautions

Please pay close attention to the information in this section. It tells you how to use your restraint system properly, to keep you and your passengers as safe as possible.

Here are some simple steps you can take to minimize the risk of harm from a deploying air bag:

1. Children 12 years old and under should always ride buckled up in a vehicle with a rear seat.
2. If a child from 2 to 12 years old (not in a rear-facing child restraint) must ride in the front passenger seat, move the seat as far back as possible and use the proper child restraint. (Refer to “Child Restraints”)
3. Children that are not big enough to wear the vehicle seat belt properly (Refer to ″Child Restraints″) should be secured in a vehicle with a rear seat in child restraints or belt-positioning booster seats. Older children who do not use child restraints or belt-positioning booster seats should ride properly buckled up in a vehicle with a rear seat.
4. Never allow children to slide the shoulder belt behind them or under their arm.
5. You should read the instructions provided with your child restraint to make sure that you are using it properly.
6. All occupants should always wear their lap and shoulder belts properly.

7. The driver and front passenger seats should be moved back as far as practical to allow the Advanced Front Air Bags room to inflate.

8. Do not lean against the door or window. If your vehicle has side air bags, and deployment occurs, the side air bags will inflate forcefully into the space between occupants and the door and occupants could be injured.

9. If the air bag system in this vehicle needs to be modified to accommodate a disabled person, contact the Customer Center. Phone numbers are provided under "If You Need Assistance."

WARNING!

- **Never place a rear-facing child restraint in front of an air bag. A deploying passenger Advanced Front Air Bag can cause death or serious injury to a child**

(Continued)

WARNING! ***(Continued)***

12 years or younger, including a child in a rear-facing child restraint.

- **Only use a rear-facing child restraint in a vehicle with a rear seat.**

Seat Belt Systems

Buckle up even though you are an excellent driver, even on short trips. Someone on the road may be a poor driver and could cause a collision that includes you. This can happen far away from home or on your own street.

Research has shown that seat belts save lives, and they can reduce the seriousness of injuries in a collision. Some of the worst injuries happen when people are thrown from the vehicle. Seat belts reduce the possibility of ejection and the risk of injury caused by striking the inside of the vehicle. Everyone in a motor vehicle should be belted at all times.

Enhanced Seat Belt Use Reminder System (BeltAlert)

Driver and Passenger BeltAlert — If Equipped

BeltAlert is a feature intended to remind the driver and outboard front seat passenger (if equipped with outboard front passenger seat BeltAlert) to buckle their seat belts. The Belt Alert feature is active whenever the ignition switch is in the AVV/START or MAR/RUN position.

Initial Indication

If the driver is unbuckled when the ignition switch is first turned to the AVV/START or MAR/RUN position, a chime will signal for a few seconds. If the driver or outboard front seat passenger (if equipped with outboard front passenger seat BeltAlert) is unbuckled when the ignition switch is first turned to the AVV/START or MAR/ RUN position the Seat Belt Reminder Light will turn on and remain on until both outboard front seat belts are buckled. The outboard front passenger seat BeltAlert is not active when the outboard front passenger seat is unoccupied.

BeltAlert Warning Sequence

The BeltAlert warning sequence is activated when the vehicle is moving above a specified vehicle speed range and the driver or outboard front seat passenger is unbuckled (the outboard front passenger seat BeltAlert is not active when the outboard front passenger seat is unoccupied). The BeltAlert warning sequence starts by blinking the Seat Belt Reminder Light and sounding an intermittent chime. Once the BeltAlert warning sequence has completed, the Seat Belt Reminder Light will remain on until the seat belts are buckled. The BeltAlert warning sequence may repeat based on vehicle speed until the driver and occupied outboard front seat passenger seat belts are buckled. The driver should instruct all occupants to buckle their seat belts.

Change Of Status

If the driver or outboard front seat passenger (if equipped with outboard front passenger seat BeltAlert) unbuckles their seat belt while the vehicle is traveling, the BeltAlert warning sequence will begin until the seat belts are buckled again. The outboard front passenger seat BeltAlert is not active when the outboard front passenger seat is unoccupied. BeltAlert may be triggered when an animal or heavy object is on the outboard front passenger seat or when the seat is folded flat (if equipped). It is recommended that pets be restrained in the rear seat (if equipped) in pet harnesses or pet carriers that are secured by seat belts, and cargo is properly stowed.

BeltAlert can be activated or deactivated by your authorized dealer. FCA US LLC does not recommend deactivating BeltAlert.

NOTE: If BeltAlert has been deactivated and the driver or outboard front seat passenger is unbuckled the Seat Belt Reminder Light will turn on and remain on until the driver and outboard front seat passenger seat belts are buckled.

Lap/Shoulder Belts

All seating positions in your vehicle are equipped with lap/shoulder belts.

The seat belt webbing retractor will lock only during very sudden stops or collisions. This feature allows the shoulder part of the seat belt to move freely with you under normal conditions. However, in a collision the seat belt will lock and reduce your risk of striking the inside of the vehicle or being thrown out of the vehicle.

WARNING!

- **Relying on the air bags alone could lead to more severe injuries in a collision. The air bags work with your seat belt to restrain you properly. In some collisions, the air bags won't deploy at all. Always wear your seat belt even though you have air bags.**
- **In a collision, you and your passengers can suffer much greater injuries if you are not properly buckled up. You can strike the interior of your vehicle or other passengers, or you can be thrown out of the vehicle. Always be sure you and others in your vehicle are buckled up properly.**
- **It is dangerous to ride in a cargo area, inside or outside of a vehicle. In a collision, people riding in these areas are more likely to be seriously injured or killed.**

(Continued)

WARNING! ***(Continued)***

- **Do not allow people to ride in any area of your vehicle that is not equipped with seats and seat belts.**
- **Be sure everyone in your vehicle is in a seat and using a seat belt properly.**
- **Wearing your seat belt incorrectly could make your injuries in a collision much worse. You might suffer internal injuries, or you could even slide out of the seat belt. Follow these instructions to wear your seat belt safely and to keep your passengers safe, too.**
- **Two people should never be belted into a single seat belt. People belted together can crash into one another in a collision, hurting one another badly. Never use a lap/shoulder belt or a lap belt for more than one person, no matter what their size.**

(Continued)

WARNING! *(Continued)*

- **A lap belt worn too high can increase the risk of injury in a collision. The seat belt forces won't be at the strong hip and pelvic bones, but across your abdomen. Always wear the lap part of your seat belt as low as possible and keep it snug.**
- **A twisted seat belt may not protect you properly. In a collision, it could even cut into you. Be sure the seat belt is flat against your body, without twists. If you can't straighten a seat belt in your vehicle, take it to your authorized dealer immediately and have it fixed.**
- **A seat belt that is buckled into the wrong buckle will not protect you properly. The lap portion could ride too high on your body, possibly causing internal injuries. Always buckle your seat belt into the buckle nearest you.**

(Continued)

WARNING! *(Continued)*

- **A seat belt that is too loose will not protect you properly. In a sudden stop, you could move too far forward, increasing the possibility of injury. Wear your seat belt snugly.**
- **A seat belt that is worn under your arm is dangerous. Your body could strike the inside surfaces of the vehicle in a collision, increasing head and neck injury. A seat belt worn under the arm can cause internal injuries. Ribs aren't as strong as shoulder bones. Wear the seat belt over your shoulder so that your strongest bones will take the force in a collision.**
- **A shoulder belt placed behind you will not protect you from injury during a collision. You are more likely to hit your head in a collision if you do not wear your shoulder belt. The lap and shoulder belt are meant to be used together.**

(Continued)

WARNING! *(Continued)*

- **A frayed or torn seat belt could rip apart in a collision and leave you with no protection. Inspect the seat belt system periodically, checking for cuts, frays, or loose parts. Damaged parts must be replaced immediately. Do not disassemble or modify the seat belt system. Seat belt assemblies must be replaced after a collision.**

Lap/Shoulder Belt Operating Instructions

1. Enter the vehicle and close the door. Sit back and adjust the seat.
2. The seat belt latch plate is above the back of the front seat, and next to your arm in the rear seat (for vehicles equipped with a rear seat). Grasp the latch plate and pull out the seat belt. Slide the latch plate up the webbing as far as necessary to allow the seat belt to go around your lap.

Pulling Out The Latch Plate

Inserting Latch Plate Into Buckle

3. When the seat belt is long enough to fit, insert the latch plate into the buckle until you hear a “click.”

Inserting Latch Plate Into Buckle

4. Position the lap belt so that it is snug and lies low across your hips, below your abdomen. To remove slack in the lap belt portion, pull up on the shoulder belt. To loosen the lap belt if it is too tight, tilt the latch plate and pull on the lap belt. A snug seat belt reduces the risk of sliding under the seat belt in a collision.

Releasing the Seat Belt

5. Position the shoulder belt across the shoulder and chest with minimal, if any slack so that it is comfortable and not resting on your neck. The retractor will withdraw any slack in the shoulder belt.

6. To release the belt, push the red button on the buckle. The seat belt will automatically retract to its stowed position. If necessary, slide the latch plate down the webbing to allow the seat belt to retract fully.

Lap/Shoulder Belt Untwisting Procedure

Use the following procedure to untwist a twisted lap/shoulder belt.

1. Position the latch plate as close as possible to the anchor point.

2. At about 6 to 12 in (15 to 30 cm) above the latch plate, grasp and twist the seat belt webbing 180 degrees to create a fold that begins immediately above the latch plate.

3. Slide the latch plate upward over the folded webbing. The folded webbing must enter the slot at the top of the latch plate.

4. Continue to slide the latch plate up until it clears the folded webbing and the seat belt is no longer twisted.

Adjustable Upper Shoulder Belt Anchorage

In the driver and front passenger seats, the top of the shoulder belt can be adjusted upward or downward to position the seat belt away from your neck. Push or squeeze the anchorage button to release the anchorage, and move it up or down to the position that serves you best.

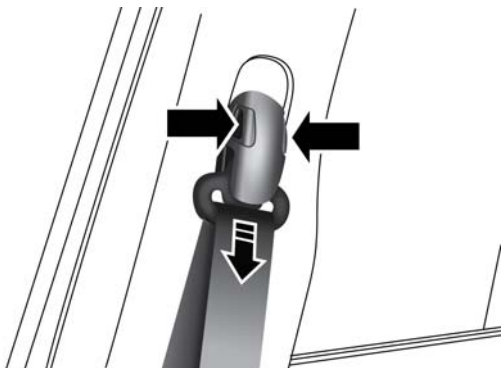

Adjustable Anchorage

As a guide, if you are shorter than average, you will prefer the shoulder belt anchorage in a lower position, and if you are taller than average, you will prefer the shoulder belt anchorage in a higher position. After you release the anchorage button, try to move it up or down to make sure that it is locked in position.

NOTE: The adjustable upper shoulder belt anchorage is equipped with an Easy Up feature. This feature allows the shoulder belt anchorage to be adjusted in the upward position without pushing or squeezing the release button. To verify the shoulder belt anchorage is latched, pull downward on the shoulder belt anchorage until it is locked into position.

Second Row Center Belt Operating Instructions

The second row center seat belt features a seat belt with a mini-latch plate and buckle, which allows the seat belt to detach from the lower anchor when the seat is folded. The mini-latch plate and regular latch plate can then be stored out of the way in the seat for added convenience to open up utilization of the storage areas behind the front seats when the seat is not occupied.

1. Remove the mini-latch plate and regular latch plate from its stowed position on the seat.
2. Grasp the mini-latch plate and pull the seat belt over the seat.

Pulling Out The Latch Plate

3. Route the shoulder belt to the inside of the left head restraint.
4. When the seat belt is long enough to fit, insert the mini-latch plate into the mini-buckle until you hear a “click.”

5. Sit back in seat. Slide the regular latch plate up the webbing as far as necessary to allow the seat belt to go around your lap.
6. When the seat belt is long enough to fit, insert the latch plate into the buckle until you hear a “click.”

Inserting Latch Plate Into Buckle

7. Position the lap belt so that it is snug and lies low across your hips, below your abdomen. To remove slack in the lap belt portion, pull up on the shoulder belt. To loosen the lap belt if it is too tight, pull on the lap belt. A snug seat belt reduces the risk of sliding under the seat belt in a collision.
8. Position the shoulder belt on your chest so that it is comfortable and not resting on your neck. The retractor will withdraw any slack in the seat belt.
9. To release the seat belt, push the red button on the buckle.
10. To disengage the mini-latch plate from the mini-buckle for storage, insert the regular latch plate into the center red slot on the mini-buckle. The seat belt will automatically retract to its stowed position. If necessary, slide the latch plate down the webbing to allow the seat belt to retract fully. Insert the mini-latch plate and regular latch plate into its stowed position.

WARNING!

- **If the mini-latch plate and mini-buckle are not properly connected when the seat belt is used by an occupant, the seat belt will not be able to provide proper restraint and will increase the risk of injury in a collision.**
- **When reattaching the mini-latch plate and mini-buckle, ensure the seat belt webbing is not twisted. If the webbing is twisted, follow the preceding procedure to detach the mini-latch plate and mini-buckle, untwist the webbing, and reattach the mini-latch plate and mini-buckle.**

Seat Belts And Pregnant Women

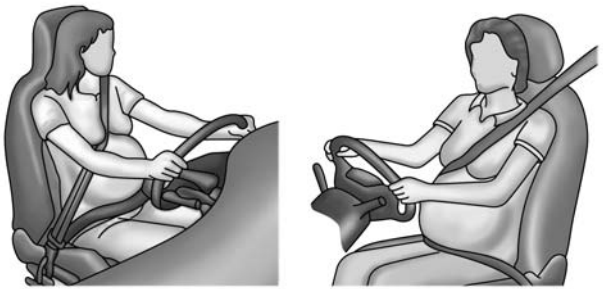

0226075266

Pregnant Women And Seat Belts

Seat belts must be worn by all occupants including pregnant women: the risk of injury in the event of an accident is reduced for the mother and the unborn child if they are wearing a seat belt.

Position the lap belt snug and low below the abdomen and across the strong bones of the hips. Place the shoulder belt across the chest and away from the neck. Never place the shoulder belt behind the back or under the arm .

Seat Belt Pretensioner

The front seat belt system is equipped with pretensioning devices that are designed to remove slack from the seat belt in the event of a collision. These devices may improve the performance of the seat belt by removing slack from the seat belt early in a collision. Pretensioners work for all size occupants, including those in child restraints.

NOTE: These devices are not a substitute for proper seat belt placement by the occupant. The seat belt still must be worn snugly and positioned properly.

The pretensioners are triggered by the Occupant Restraint Controller (ORC). Like the air bags, the pretensioners are single use items. A deployed pretensioner or a deployed air bag must be replaced immediately.

Energy Management Feature

This vehicle has a seat belt system with an Energy Management feature in the front seating positions that may help further reduce the risk of injury in the event of a collision. This seat belt system has a retractor assembly that is designed to release webbing in a controlled manner.

Switchable Automatic Locking Retractor (ALR)

The seat belts in the passenger seating positions are equipped with a Switchable Automatic Locking Retractor (ALR) which is used to secure a child restraint system. For additional information, refer to “Installing Child Restraints Using The Vehicle Seat Belt” under the “Child

Restraints" section of this manual. The table below defines the type of feature for each seating position.

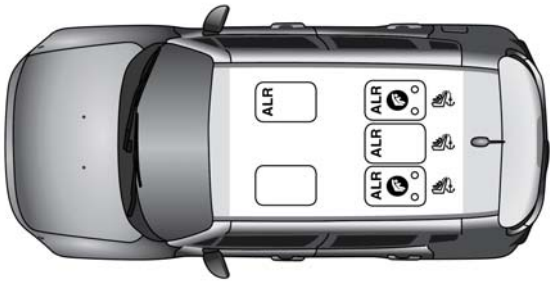

- ALR = Switchable Automatic Locking Retractor

If the passenger seating position is equipped with an ALR and is being used for normal usage, only pull the seat belt webbing out far enough to comfortably wrap around the occupant's mid-section so as to not activate the ALR. If the ALR is activated, you will hear a clicking sound as the seat belt retracts. Allow the webbing to retract completely in this case and then carefully pull out only the amount of webbing necessary to comfortably wrap around the occupant's mid-section. Slide the latch plate into the buckle until you hear a "click."

In Automatic Locking Mode, the shoulder belt is automatically pre-locked. The seat belt will still retract to remove any slack in the shoulder belt. Use the Automatic Locking Mode anytime a child restraint is installed in a seating position that has a seat belt with this feature. Children 12 years old and under should always be properly restrained in a vehicle with a rear seat.

WARNING!

- **Never place a rear-facing child restraint in front of an air bag. A deploying Passenger Advanced Front Air Bag can cause death or serious injury to a child 12 years or younger, including a child in a rear-facing child restraint.**
- **Only use a rear-facing child restraint in a vehicle with a rear seat.**

How To Engage The Automatic Locking Mode

1. Buckle the combination lap and shoulder belt.
2. Grasp the shoulder portion and pull downward until the entire seat belt is extracted.
3. Allow the seat belt to retract. As the seat belt retracts, you will hear a clicking sound. This indicates the seat belt is now in the Automatic Locking Mode.

How To Disengage The Automatic Locking Mode

Unbuckle the combination lap/shoulder belt and allow it to retract completely to disengage the Automatic Locking Mode and activate the vehicle sensitive (emergency) locking mode.

WARNING!

- **The seat belt assembly must be replaced if the switchable Automatic Locking Retractor (ALR) feature or any other seat belt function is not working properly when checked according to the procedures in the Service Manual.**
- **Failure to replace the seat belt assembly could increase the risk of injury in collisions.**

(Continued)

WARNING! *(Continued)*

- **Do not use the Automatic Locking Mode to restrain occupants who are wearing the seat belt or children who are using booster seats. The locked mode is only used to install rear-facing or forward-facing child restraints that have a harness for restraining the child.**

Supplemental Restraint System (SRS)

Air Bag System Components

Your vehicle may be equipped with the following air bag system components:

- Occupant Restraint Controller (ORC)
- Air Bag Warning Light
- Steering Wheel and Column
- Instrument Panel
- Knee Impact Bolsters
- Advanced Front Air Bags
- Supplemental Side Air Bags
- Supplemental Knee Air Bags
- Front and Side Impact Sensors
- Seat Belt Pretensioners
- Seat Belt Buckle Switch
- Seat Track Position Sensors

Advanced Front Air Bags

This vehicle has Advanced Front Air Bags for both the driver and front passenger as a supplement to the seat belt restraint systems. The driver's Advanced Front Air Bag is mounted in the center of the steering wheel. The

passenger's Advanced Front Air Bag is mounted in the instrument panel, above the glove compartment. The words "SRS AIRBAG" or "AIRBAG" are embossed on the air bag covers.

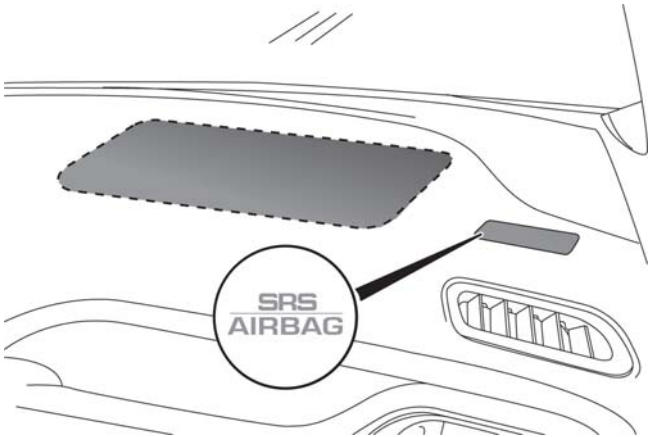

Passenger Advanced Front Air Bag

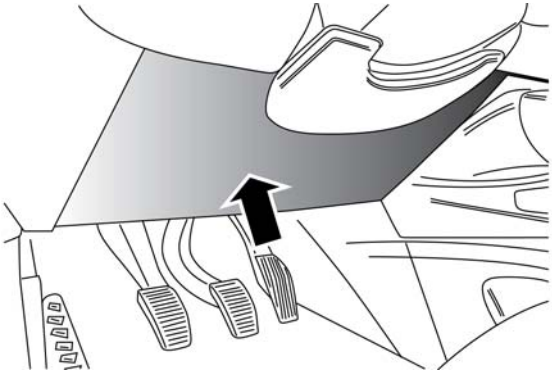

Supplemental Driver Knee Air Bag/Driver Knee Impact Bolster

WARNING!

- **Being too close to the steering wheel or instrument panel during Advanced Front Air Bag deployment could cause serious injury, including death. Air bags need room to inflate. Sit back, comfortably extending your arms to reach the steering wheel or instrument panel.**
- **Never place a rear-facing child restraint in front of an air bag. A deploying Passenger Advanced Front Air Bag can cause death or serious injury to a child 12 years or younger, including a child in a rear-facing child restraint.**
- **Only use a rear-facing child restraint in a vehicle with a rear seat.**

Advanced Front Air Bag Features

The Advanced Front Air Bag system has multistage driver and front passenger air bags. This system provides output appropriate to the severity and type of collision as determined by the Occupant Restraint Controller (ORC), which may receive information from the front impact sensors or other system components.

The first stage inflator is triggered immediately during an impact that requires air bag deployment. A low energy output is used in less severe collisions. A higher energy output is used for more severe collisions.

This vehicle may be equipped with driver and/or front passenger seat track position sensors that may adjust the inflation rate of the Advanced Front Air Bags based upon seat position.

This vehicle may be equipped with a driver and/or front passenger seat belt buckle switch that detects whether the driver or front passenger seat belt is buckled. The seat belt buckle switch may adjust the inflation rate of the Advanced Front Air Bags.

WARNING!

- **No objects should be placed over or near the air bag on the instrument panel or steering wheel, because any such objects could cause harm if the vehicle is in a collision severe enough to cause the air bags to inflate.**
- **Do not put anything on or around the air bag covers or attempt to open them manually. You may damage the air bags and you could be injured because the air bags may no longer be functional. The protective covers for the air bag cushions are designed to open only when the air bags are inflating.**
- **Relying on the air bags alone could lead to more severe injuries in a collision. The air bags work with your seat belt to restrain you properly. In**

(Continued)

WARNING! ***(Continued)***

some collisions, air bags won't deploy at all. Always wear your seat belts even though you have air bags.

Advanced Front Air Bag Operation

Advanced Front Air Bags are designed to provide additional protection by supplementing the seat belts. Advanced Front Air Bags are not expected to reduce the risk of injury in rear, side, or rollover collisions. The Advanced Front Air Bags will not deploy in all frontal collisions, including some that may produce substantial vehicle damage — for example, some pole collisions, truck underrides, and angle offset collisions.

On the other hand, depending on the type and location of impact, Advanced Front Air Bags may deploy in crashes with little vehicle front-end damage but that produce a severe initial deceleration.

Because air bag sensors measure vehicle deceleration over time, vehicle speed and damage by themselves are not good indicators of whether or not an air bag should have deployed.

Seat belts are necessary for your protection in all collisions, and also are needed to help keep you in position, away from an inflating air bag.

When the ORC detects a collision requiring the Advanced Front Air Bags, it signals the inflator units. A large quantity of non-toxic gas is generated to inflate the Advanced Front Air Bags.

The steering wheel hub trim cover and the upper right side of the instrument panel separate and fold out of the way as the air bags inflate to their full size. The Advanced Front Air Bags fully inflate in less time than it takes to blink your eyes. The air bags then quickly deflate while helping to restrain the driver and front passenger.

Knee Impact Bolsters

The Knee Impact Bolsters help protect the knees of the driver and front passenger, and position the front occupants for improved interaction with the Advanced Front Air Bags.

WARNING!

- **Do not drill, cut, or tamper with the knee impact bolsters in any way.**
- **Do not mount any accessories to the knee impact bolsters such as alarm lights, stereos, citizen band radios, etc.**

Supplemental Driver Knee Air Bag

This vehicle is equipped with a Supplemental Driver Knee Air Bag mounted in the instrument panel below the steering column. The Supplemental Driver Knee Air Bag provides enhanced protection during a frontal impact by working together with the seat belts, pretensioners, and Advanced Front Air Bags.

Supplemental Side Air Bags

Your vehicle is equipped with two types of side air bags:

1. Supplemental Seat-Mounted Side Air Bags (SABs): Located in the outboard side of the front seats. The SABs are marked with a "SRS AIRBAG" or "AIRBAG" label sewn into the outboard side of the seats.

Front Supplemental Seat-Mounted Side Air Bag

The SABs may help to reduce the risk of occupant injury during certain side impacts and/or vehicle rollover events, in addition to the injury reduction potential provided by the seat belts and body structure.

When the SAB deploys, it opens the seam on the outboard side of the seatback's trim cover. The inflating SAB deploys through the seat seam into the space between the occupant and the door. The SAB moves at a very high speed and with such a high force that it could injure occupants if they are not seated properly, or if items are positioned in the area where the SAB inflates. Children are at an even greater risk of injury from a deploying air bag.

WARNING!

Do not use accessory seat covers or place objects between you and the Side Air Bags; the performance could be adversely affected and/or objects could be pushed into you, causing serious injury.

2. Supplemental Side Air Bag Inflatable Curtains (SABICs): Located above the side windows. The trim covering the SABICs is labeled "SRS AIRBAG" or "AIRBAG."

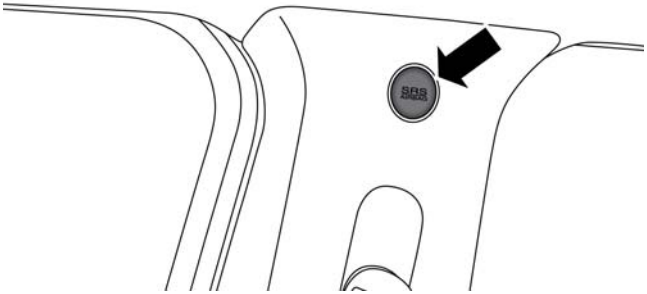

Supplemental Side Air Bag Inflatable Curtain (SABIC) Label Location

SABICs may help reduce the risk of head or other injuries to front and rear seat outboard occupants in certain side impacts and/or vehicle rollover events, in addition to the injury reduction potential provided by the seat belts and body structure.

The SABICs deploy downward, covering the side windows. An inflating SABIC pushes the outside edge of the trim out of the way and covers the window. The SABICs inflate with enough force to injure occupants if they are not belted and seated properly, or if items are positioned in the area where the SABICs inflate. Children are at an even greater risk of injury from a deploying air bag.

The SABICs may help reduce the risk of partial or complete ejection of vehicle occupants through side windows in certain rollover or side impact events.

WARNING!

- **Your vehicle is equipped with left and right Supplemental Side Air Bag Inflatable Curtains (SABICs). Do not stack luggage or other cargo up high enough to block the deployment of the SABICs. The trim covering above the side windows where the SABIC and its deployment path are located should remain free from any obstructions.**
- **Your vehicle is equipped with SABICs. In order for the SABICs to work as intended, do not install any accessory items in your vehicle which could alter the roof. Do not add an aftermarket sunroof to your vehicle. Do not add roof racks that require permanent attachments (bolts or screws) for installation on the vehicle roof. Do not drill into the roof of the vehicle for any reason.**

The SABICs and SABs ("Side Air Bags") are designed to activate in certain side impacts and certain rollover events. The Occupant Restraint Controller ("ORC") determines whether the deployment of the Side Air Bags in a particular side impact or rollover event is appropriate, based on the severity and type of collision. Vehicle damage by itself is not a good indicator of whether or not Side Air Bags should have deployed.

Side Air Bags are a supplement to the seat belt restraint system. Side Air Bags deploy in less time than it takes to blink your eyes. Occupants, including children, who are up against or very close to Side Air Bags can be seriously injured or killed. Occupants, including children, should never lean on or sleep against the door, side windows, or area where the Side Air Bags inflate, even if they are in an infant or child restraint.

Seat belts (and child restraints where appropriate) are necessary for your protection in all collisions. They also help keep you in position, away from inflating Side Air Bags. To get the best protection from the Side Air Bags, occupants must wear their seat belts properly and sit upright with their backs against the seats. Children must be properly restrained in a child restraint or booster seat that is appropriate for the size of the child.

WARNING!

- **Side Air Bags need room to inflate. Do not lean against the door or window. Sit upright in the center of the seat.**
- **Being too close to the Side Air Bags during deployment could cause you to be severely injured or killed.**
- **Relying on the Side Air Bags alone could lead to more severe injuries in a collision. The Side Air Bags work with your seat belt to restrain you**

(Continued)

WARNING! *(Continued)*

properly. In some collisions, Side Air Bags won't deploy at all. Always wear your seat belt even though you have Side Air Bags.

NOTE: Air bag covers may not be obvious in the interior trim, but they will open during air bag deployment.

Side Impacts

In side impacts, the side impact sensors aid the ORC in determining the appropriate response to impact events. The system is calibrated to deploy the Side Air Bags on the impact side of the vehicle during impacts that require Side Air Bag occupant protection. In side impacts, the Side Air Bags deploy independently; a left side impact deploys the left Side Air Bags only and a right side impact deploys the right Side Air Bags only.

The Side Air Bags will not deploy in all side collisions, including some collisions at certain angles, or some side collisions that do not impact the area of the passenger compartment. The Side Air Bags may deploy during angled or offset frontal collisions where the Advanced Front Air Bags deploy.

Rollover Events

Side Air Bags are designed to activate in certain rollover events. The ORC determines whether the deployment of the Side Air Bags in a particular rollover event is appropriate, based on the severity and type of collision. Vehicle damage by itself is not a good indicator of whether or not Side Air Bags should have deployed.

The Side Air Bags will not deploy in all rollover events. The rollover sensing system determines if a rollover event may be in progress and whether deployment is appropriate. In the event the vehicle experiences a rollover or near rollover event, and deployment of the Side

Air Bags is appropriate, the rollover sensing system will also deploy the seat belt pretensioners on both sides of the vehicle.

If A Deployment Occurs

The Advanced Front Air Bags are designed to deflate immediately after deployment.

NOTE: Front and/or side air bags will not deploy in all collisions. This does not mean something is wrong with the air bag system.

If you do have a collision which deploys the air bags, any or all of the following may occur:

- The air bag material may sometimes cause abrasions and/or skin reddening to the occupants as the air bags deploy and unfold. The abrasions are similar to friction rope burns or those you might get sliding along a carpet or gymnasium floor. They are not caused by contact with chemicals. They are not permanent and normally heal quickly. However, if you haven't healed significantly within a few days, or if you have any blistering, see your doctor immediately.
- As the air bags deflate, you may see some smoke-like particles. The particles are a normal by-product of the process that generates the non-toxic gas used for air bag inflation. These airborne particles may irritate the skin, eyes, nose, or throat. If you have skin or eye irritation, rinse the area with cool water. For nose or throat irritation, move to fresh air. If the irritation continues, see your doctor. If these particles settle on your clothing, follow the garment manufacturer's instructions for cleaning.

Do not drive your vehicle after the air bags have deployed. If you are involved in another collision, the air bags will not be in place to protect you.

WARNING!

Deployed air bags and seat belt pretensioners cannot protect you in another collision. Have the air bags, seat belt pretensioners, and the seat belt retractor assemblies replaced by an authorized dealer immediately. Also, have the Occupant Restraint Controller System serviced as well.

NOTE:

- Air bag covers may not be obvious in the interior trim, but they will open during air bag deployment.
- After any collision, the vehicle should be taken to an authorized dealer immediately.

Enhanced Accident Response System

In the event of an impact, if the communication network remains intact, and the power remains intact, depending on the nature of the event, the ORC will determine whether to have the Enhanced Accident Response System perform the following functions:

- Cut off fuel to the engine.
- Flash hazard lights as long as the battery has power or until the hazard light button is pressed. The hazard lights can be deactivated by pressing the hazard light button.
- Turn on the interior lights, which remain on as long as the battery has power or for 15 minutes from the intervention of the Enhanced Accident Response System.
- Unlock the power door locks.
- Turn off the Fuel Pump Heater.
- Turn off the HVAC Blower Motor.
- Close the HVAC Circulation Door.

Enhanced Accident Response System Reset Procedure

After the event occurs, when the system is active, a message regarding fuel cutoff is displayed. Turn the ignition switch from ignition AVV/START or MAR/ACC/ON/RUN to ignition STOP/OFF/LOCK. Carefully check the vehicle for fuel leaks in the engine compartment and on the ground near the engine compartment and fuel tank before resetting the system and starting the engine.

Depending on the nature of the event the left and right turn signal lights, located in the instrument panel, may both be blinking and will continue to blink. In order to move your vehicle to the side of the road, you must follow the system reset procedure.

Customer Action	Customer Will See
1. Turn Ignition OFF. (Turn Signal Switch Must Be Placed In Neutral State).	
2. Turn Ignition ON.	Left Turn Light Is OFF. Right Turn Light BLINKS.
3. Turn Right Turn Signal Switch ON.	Right Turn Light Is ON SOLID. Left Turn Light BLINKS.
4. Turn Left Turn Signal Switch ON.	Left Turn Light Is ON SOLID. Right Turn Signal Light BLINKS.
5. Turn Right Turn Signal Switch ON.	Right Turn Light Is ON SOLID. Left Turn Light BLINKS.

Customer Action	Customer Will See
6. Turn Left Turn Signal Switch ON.	Left Turn Light Is ON SOLID. Right Turn Light Is ON SOLID.
7. Turn Left Turn Signal Switch OFF. (Turn Signal Switch Must Be Placed In Neutral State).	Left Turn light Is OFF. Right Turn Light is OFF.
8. Turn Ignition OFF.	
9. Turn Hazard Flashers OFF (Manually).	System is now reset and the engine may be started.

If a reset procedure step is not completed within 60 seconds, then the turn signal lights will blink and the reset procedure must be performed again in order to be successful.

Air Bag Warning Light

The air bags must be ready to inflate for your protection in a collision. The Occupant Restraint Controller (ORC) monitors the internal circuits and interconnecting wiring associated with air bag system electrical components.

The ORC monitors the readiness of the electronic parts of the air bag system whenever the ignition switch is in the AVV/START or MAR/ACC/ON/RUN position. If the ignition switch is in the STOP/OFF/LOCK position the air bag system is not on and the air bags will not inflate.

The ORC contains a backup power supply system that may deploy the air bags even if the battery loses power or it becomes disconnected prior to deployment.

The ORC turns on the Air Bag Warning Light in the instrument panel for approximately four to eight seconds for a self-check when the ignition switch is first turned to

the MAR/ACC/ON/RUN position. After the self-check, the Air Bag Warning Light will turn off. If the ORC detects a malfunction in any part of the system, it turns on the Air Bag Warning Light, either momentarily or continuously. A single chime will sound to alert you if the light comes on again after initial startup.

The ORC also includes diagnostics that will illuminate the instrument panel Air Bag Warning Light if a malfunction is detected that could affect the air bag system. The diagnostics also record the nature of the malfunction. While the air bag system is designed to be maintenance free, if any of the following occurs, have an authorized dealer service the air bag system immediately.

- The Air Bag Warning Light does not come on during the four to eight seconds when the ignition switch is first turned to the MAR/ACC/ON/RUN position.
- The Air Bag Warning Light remains on after the four to eight-second interval.
- The Air Bag Warning Light comes on intermittently or remains on while driving.

NOTE: If the speedometer, tachometer, or any engine related gauges are not working, the Occupant Restraint Controller (ORC) may also be disabled. In this condition the air bags may not be ready to inflate for your protection. Have an authorized dealer service the air bag system immediately.

WARNING!

Ignoring the Air Bag Warning Light in your instrument panel could mean you won't have the air bags to protect you in a collision. If the light does not come on as a bulb check when the ignition is first placed in the on position, and stays on after you start the vehicle, or if it comes on as you drive, have an authorized dealer service the air bag system immediately.

Redundant Air Bag Warning Light

If a fault with the Air Bag Warning Light is detected, which could affect the Supplemental Restraint System ("SRS"), the Redundant Air Bag Warning Light will illuminate on the instrument panel. The Redundant Air Bag Warning Light will stay on until the fault is cleared. In addition, a single chime will sound to alert you that the Redundant Air Bag Warning Light has come on and a fault has been detected. If the Redundant Air Bag Warning Light comes on intermittently or remains on while driving have an authorized dealer service the vehicle immediately. For additional information regarding the Redundant Air Bag Warning Light refer to the "Instrument Panel" section of this manual.

Maintaining Your Air Bag System

WARNING!

- **Modifications to any part of the air bag system could cause it to fail when you need it. You could be injured if the air bag system is not there to protect you. Do not modify the components or wiring, including adding any kind of badges or stickers to the steering wheel hub trim cover or the upper right side of the instrument panel. Do not modify the front bumper, vehicle body structure, or add aftermarket side steps or running boards.**
- **It is dangerous to try to repair any part of the air bag system yourself. Be sure to tell anyone who works on your vehicle that it has an air bag system.**
- **Do not attempt to modify any part of your air bag system. The air bag may inflate accidentally or may**

(Continued)

WARNING! ***(Continued)***

not function properly if modifications are made. Take your vehicle to an authorized dealer for any air bag system service. If your seat, including your trim cover and cushion, needs to be serviced in any way (including removal or loosening/tightening of seat attachment bolts), take the vehicle to your authorized dealer. Only manufacturer approved seat accessories may be used. If it is necessary to modify the air bag system for persons with disabilities, contact your authorized dealer.

Event Data Recorder (EDR)

This vehicle is equipped with an event data recorder (EDR). The main purpose of an EDR is to record, in certain crash or near crash-like situations, such as an air bag deployment or hitting a road obstacle, data that will assist in understanding how a vehicle's systems performed. The EDR is designed to record data related to vehicle dynamics and safety systems for a short period of time, typically 30 seconds or less. The EDR in this vehicle is designed to record such data as:

- How various systems in your vehicle were operating;
- Whether or not the driver and passenger safety belts were buckled/fastened;
- How far (if at all) the driver was depressing the accelerator and/or brake pedal; and,
- How fast the vehicle was traveling.

These data can help provide a better understanding of the circumstances in which crashes and injuries occur.

NOTE: EDR data are recorded by your vehicle only if a non-trivial crash situation occurs; no data are recorded by the EDR under normal driving conditions and no personal data (e.g., name, gender, age, and crash location) are recorded. However, other parties, such as law enforcement, could combine the EDR data with the type of personally identifying data routinely acquired during a crash investigation.

To read data recorded by an EDR, special equipment is required, and access to the vehicle or the EDR is needed. In addition to the vehicle manufacturer, other parties, such as law enforcement, that have the special equipment, can read the information if they have access to the vehicle or the EDR.

Child Restraints

Everyone in your vehicle needs to be buckled up at all times, including babies and children.

Every state in the United States, and every Canadian province, requires that small children ride in proper restraint systems. This is the law, and you can be prosecuted for ignoring it.

Children 12 years or younger should ride properly buckled up in a rear seat, if available. According to crash statistics, children are safer when properly restrained in the rear seats rather than in the front.

WARNING!

In a collision, an unrestrained child can become a projectile inside the vehicle. The force required to hold even an infant on your lap could become so great that you could not hold the child, no matter how strong you are. The child and others could be badly injured. Any child riding in your vehicle should be in a proper restraint for the child's size.

There are different sizes and types of restraints for children from newborn size to the child almost large enough for an adult safety belt. Always check the child seat Owner's Manual to make sure you have the correct seat for your child. Carefully read and follow all the instructions and warnings in the child restraint Owner's Manual and on all the labels attached to the child restraint.

Before buying any restraint system, make sure that it has a label certifying that it meets all applicable Safety Standards. You should also make sure that you can install it in the vehicle where you will use it.

NOTE:

- For additional information, refer to www.seatcheck.org or call 1–866–732–8243.
- Canadian residents should refer to Transport Canada's website for additional information: www.tc.gc.ca/eng/motorvehiclesafety/safedrivers-childsafety-index-53.htm

Summary Of Recommendations For Restraining Children In Vehicles

	Child Size, Height, Weight Or Age	Recommended Type Of Child Restraint
Infants and Toddlers	Children who are two years old or younger and who have not reached the height or weight limits of their child restraint	Either an Infant Carrier or a Convertible Child Restraint, facing rearward in the rear seat of the vehicle
Small Children	Children who are at least two years old or who have out-grown the height or weight limit of their rear-facing child restraint	Forward-Facing Child Restraint with a five-point Harness, facing forward in the rear seat of the vehicle
Larger Children	Children who have out-grown their forward-facing child restraint, but are too small to properly fit the vehicle's seat belt	Belt Positioning Booster Seat and the vehicle seat belt, seated in the rear seat of the vehicle
Children Too Large for Child Restraints	Children 12 years old or younger, who have out-grown the height or weight limit of their booster seat	Vehicle Seat Belt, seated in the rear seat of the vehicle

Infants And Child Restraints

Safety experts recommend that children ride rear-facing in the vehicle until they are two years old or until they reach either the height or weight limit of their rear-facing child restraint. Two types of child restraints can be used rear-facing: infant carriers and convertible child seats.

The infant carrier is only used rear-facing in the vehicle. It is recommended for children from birth until they reach the weight or height limit of the infant carrier. Convertible child seats can be used either rear-facing or forward-facing in the vehicle. Convertible child seats often have a higher weight limit in the rear-facing direction than infant carriers do, so they can be used rear-facing by children who have outgrown their infant carrier but are still less than at least two years old. Children should remain rear-facing until they reach the highest weight or height allowed by their convertible child seat.

WARNING!

- **Never place a rear-facing child restraint in front of an air bag. A deploying passenger Advanced Front Air Bag can cause death or serious injury to a child 12 years or younger, including a child in a rear-facing child restraint.**
- **Only use a rear-facing child restraint in a vehicle with a rear seat.**

Older Children And Child Restraints

Children who are two years old or who have outgrown their rear-facing convertible child seat can ride forward-facing in the vehicle. Forward-facing child seats and convertible child seats used in the forward-facing direction are for children who are over two years old or who have outgrown the rear-facing weight or height limit of their rear-facing convertible child seat. Children should

remain in a forward-facing child seat with a harness for as long as possible, up to the highest weight or height allowed by the child seat.

All children whose weight or height is above the forward-facing limit for the child seat should use a belt-positioning booster seat until the vehicle's seat belts fit properly. If the child cannot sit with knees bent over the vehicle's seat cushion while the child's back is against the seatback, they should use a belt-positioning booster seat. The child and belt-positioning booster seat are held in the vehicle by the seat belt.

WARNING!

- **Improper installation can lead to failure of an infant or child restraint. It could come loose in a collision. The child could be badly injured or killed. Follow the child restraint manufacturer's**

(Continued)

WARNING! ***(Continued)***

directions exactly when installing an infant or child restraint.

- **After a child restraint is installed in the vehicle, do not move the vehicle seat forward or rearward because it can loosen the child restraint attachments. Remove the child restraint before adjusting the vehicle seat position. When the vehicle seat has been adjusted, reinstall the child restraint.**
- **When your child restraint is not in use, secure it in the vehicle with the seat belt or LATCH anchorages, or remove it from the vehicle. Do not leave it loose in the vehicle. In a sudden stop or accident, it could strike the occupants or seatbacks and cause serious personal injury.**

Children Too Large For Booster Seats

Children who are large enough to wear the shoulder belt comfortably, and whose legs are long enough to bend over the front of the seat when their back is against the seatback, should use the seat belt in a rear seat. Use this simple 5-step test to decide whether the child can use the vehicle's seat belt alone:

1. Can the child sit all the way back against the back of the vehicle seat?
2. Do the child's knees bend comfortably over the front of the vehicle seat – while they are still sitting all the way back?
3. Does the shoulder belt cross the child's shoulder between their neck and arm?
4. Is the lap part of the belt as low as possible, touching the child's thighs and not their stomach?
5. Can the child stay seated like this for the whole trip?

If the answer to any of these questions was "no," then the child still needs to use a booster seat in this vehicle. If the child is using the lap/shoulder belt, check seat belt fit periodically and make sure the seat belt buckle is latched. A child's squirming or slouching can move the belt out of position. If the shoulder belt contacts the face or neck, move the child closer to the center of the vehicle, or use a booster seat to position the seat belt on the child correctly.

WARNING!

Never allow a child to put the shoulder belt under an arm or behind their back. In a crash, the shoulder belt will not protect a child properly, which may result in serious injury or death. A child must always wear both the lap and shoulder portions of the seat belt correctly.

Recommendations For Attaching Child Restraints

Restraint Type	Combined Weight of the Child + Child Restraint	Use any attachment method shown with an "X" Below			
		LATCH – Lower Anchors Only	Seat Belt Only	LATCH – Lower Anchors + Top Tether Anchor	Seat Belt + Top Tether Anchor
Rear-Facing Child Restraint	Up to 65 lbs (29.5 kg)	X	X		
Rear-Facing Child Restraint	More than 65 lbs (29.5 kg)		X		
Forward-Facing Child Restraint	Up to 65 lbs (29.5 kg)			X	X
Forward-Facing Child Restraint	More than 65 lbs (29.5 kg)				X

Lower Anchors And Tethers For CHildren (LATCH) Restraint System

022668173

Your vehicle is equipped with the child restraint anchorage system called LATCH, which stands for Lower Anchors and Tethers for CHildren. The LATCH system has three vehicle anchor points for installing LATCH-equipped child seats. There are two lower anchorages located at the back of the seat cushion where it meets the seatback and one top tether anchorage located behind the seating position. These anchorages are used to install LATCH-equipped child seats without using the vehicle's seat belts. Some seating positions may have a top tether anchorage but no lower anchorages. In these seating positions, the seat belt must be used with the top tether anchorage to install the child restraint. Please see the following table for more information.

LATCH Positions For Installing Child Restraints In This Vehicle

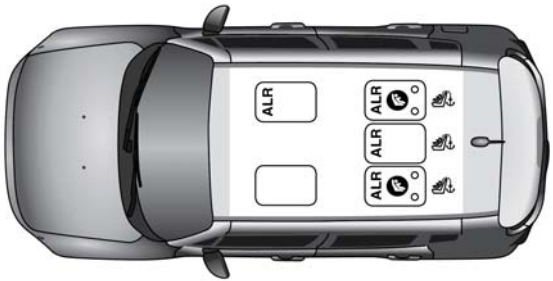

- — Lower Anchorage Symbol 2 anchorages per seating position
- — Top Tether Anchorage Symbol

Frequently Asked Questions About Installing Child Restraints With LATCH		
What is the weight limit (child's weight + weight of the child restraint) for using the LATCH anchorage system to attach the child restraint?	65 lbs (29.5 kg)	Use the LATCH anchorage system until the combined weight of the child and the child restraint is 65 lbs (29.5 kg). Use the seat belt and tether anchor instead of the LATCH system once the combined weight is more than 65 lbs (29.5 kg).
Can the LATCH anchorages and the seat belt be used together to attach a rear-facing or forward-facing child restraint?	No	Do not use the seat belt when you use the LATCH anchorage system to attach a rear-facing or forward-facing child restraint.
Can a child seat be installed in the center position using the inner LATCH lower anchorage?	No	Use the seat belt and tether anchor to install a child seat in the center seating position.

Frequently Asked Questions About Installing Child Restraints With LATCH		
Can two child restraints be attached using a common lower LATCH anchorage?	No	Never “share” a LATCH anchorage with two or more child restraints. If the center position does not have dedicated LATCH lower anchorages, use the seat belt to install a child seat in the center position next to a child seat using the LATCH anchorages in an outboard position.
Can the rear-facing child restraint touch the back of the front passenger seat?	Yes	The child seat may touch the back of the front passenger seat if the child restraint manufacturer also allows contact. See your child restraint owner’s manual for more information.
Can the head restraints be removed?	Yes	The head restraints may be removed in every rear seating position.

Locating LATCH Anchorages

The lower anchorages are round bars that are found at the rear of the seat cushion where it meets the seatback, below the anchorage symbols on the seatback. They are just visible when you lean into the rear seat to install the child restraint. You will easily feel them if you run your finger along the gap between the seatback and seat cushion.

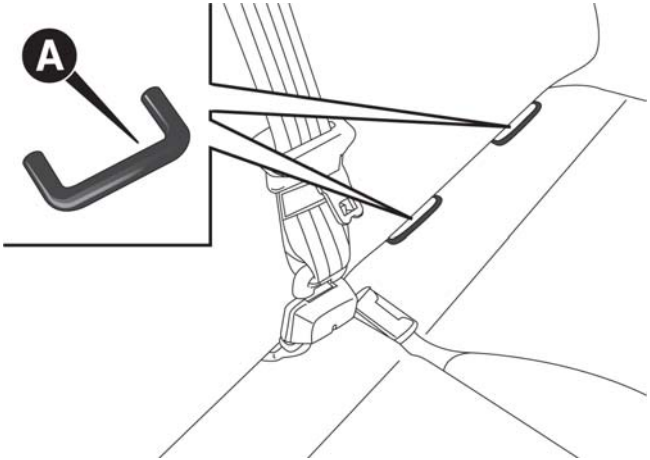

A — Lower Anchorage Location

Locating Tether Anchorages

There are tether strap anchorages behind each rear seating position located on the back of the seat.

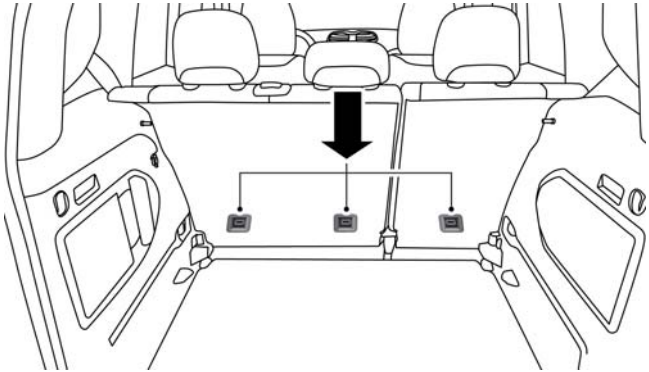

Tether Anchorage Locations

LATCH-compatible child restraint systems will be equipped with a rigid bar or a flexible strap on each side. Each will have a hook or connector to attach to the lower anchorage and a way to tighten the connection to the anchorage. Forward-facing child restraints and some rear-facing child restraints will also be equipped with a tether strap. The tether strap will have a hook at the end to attach to the top tether anchorage and a way to tighten the strap after it is attached to the anchorage.

Center Seat LATCH:

WARNING!

- **Do not install a child restraint in the center position using the LATCH system. This position is not approved for installing child seats using the LATCH attachments. You must use the seat belt and tether anchor to install a child seat in the center seating position.**

(Continued)

WARNING! ***(Continued)***

- **Never use the same lower anchorage to attach more than one child restraint. Please refer to "Installing The LATCH-Compatible Child Restraint System" for typical installation instructions.**

Always follow the directions of the child restraint manufacturer when installing your child restraint. Not all child restraint systems will be installed as described here.

To Install A LATCH-Compatible Child Restraint

If the selected seating position has a Switchable Automatic Locking Retractor (ALR) seat belt, stow the seat belt, following the instructions below. See the section "Installing Child Restraints Using the Vehicle Seat Belt" to check what type of seat belt each seating position has.

1. Loosen the adjusters on the lower straps and on the tether strap of the child seat so that you can more easily attach the hooks or connectors to the vehicle anchorages.
2. Place the child seat between the lower anchorages for that seating position. For some second row seats, you may need to recline the seat and / or raise the head restraint to get a better fit. If the rear seat can be moved forward and rearward in the vehicle, you may wish to move it to its rear-most position to make room for the child seat. You may also move the front seat forward to allow more room for the child seat.
3. Attach the lower hooks or connectors of the child restraint to the lower anchorages in the selected seating position.

4. If the child restraint has a tether strap, connect it to the top tether anchorage. See the section "Installing Child Restraints Using the Top Tether Anchorage" for directions to attach a tether anchor.
5. Tighten all of the straps as you push the child restraint rearward and downward into the seat. Remove slack in the straps according to the child restraint manufacturer's instructions.
6. Test that the child restraint is installed tightly by pulling back and forth on the child seat at the belt path. It should not move more than 1 inch (25.4 mm) in any direction.

How To Stow An Unused ALR Seat Belt:

When using the LATCH attaching system to install a child restraint, stow all ALR seat belts that are not being used by other occupants or being used to secure child restraints. An unused belt could injure a child if they play with it and accidentally lock the seat belt retractor. Before installing a child restraint using the LATCH system, buckle the seat belt behind the child restraint and out of the child's reach. If the buckled seat belt interferes with the child restraint installation, instead of buckling it behind the child restraint, route the seat belt through the child restraint belt path and then buckle it. Do not lock the seat belt. Remind all children in the vehicle that the seat belts are not toys and that they should not play with them.

WARNING!

- **Improper installation of a child restraint to the LATCH anchorages can lead to failure of the restraint. The child could be badly injured or killed. Follow the child restraint manufacturer's directions exactly when installing an infant or child restraint.**
- **Child restraint anchorages are designed to withstand only those loads imposed by correctly-fitted child restraints. Under no circumstances are they to be used for adult seat belts, harnesses, or for attaching other items or equipment to the vehicle.**

Installing Child Restraints Using The Vehicle Seat Belt

The seat belts in the passenger seating positions are equipped with a Switchable Automatic Locking Retractor (ALR) that is designed to keep the lap portion of the seat belt tight around the child restraint so that it is not necessary to use a locking clip. The ALR retractor can be "switched" into a locked mode by pulling all of the webbing out of the retractor and then letting the webbing retract back into the retractor. If it is locked, the ALR will make a clicking noise while the webbing is pulled back into the retractor. Refer to the "Automatic Locking Mode" description under "Occupant Restraints" for additional information on ALR.

Lap/Shoulder Belt Systems For Installing Child Restraints In This Vehicle

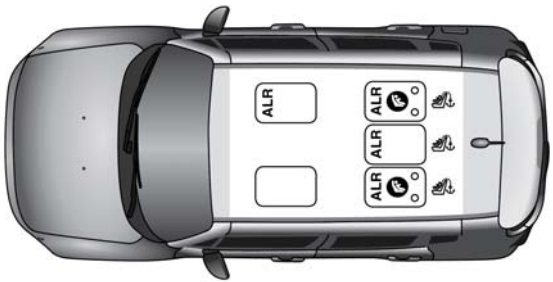

- ALR = Switchable Automatic Locking Retractor
- = Top Tether Anchorage Symbol

Frequently Asked Questions About Installing Child Restraints With Seat Belts		
What is the weight limit (child's weight + weight of the child restraint) for using the Tether Anchor with the seat belt to attach a forward facing child restraint?	Weight limit of the Child Restraint	Always use the tether anchor when using the seat belt to install a forward facing child restraint, up to the recommended weight limit of the child restraint.
Can the rear-facing child restraint touch the back of the front passenger seat?	Yes	Contact between the front passenger seat and the child restraint is allowed, if the child restraint manufacturer also allows contact.
Can the head restraints be removed?	Yes	The head restraints should only be removed by qualified technicians. If any of the head restraints require removal, see your authorized dealer.
Can the buckle stalk be twisted to tighten the seat belt against the belt path of the child restraint?	No	Do not twist the buckle stalk in a seating position with an ALR retractor.

Installing A Child Restraint With A Switchable Automatic Locking Retractor (ALR)

1. Place the child seat in the center of the seating position. For some second row seats, you may need to recline the seat and/or raise the head restraint to get a better fit. If the rear seat can be moved forward and rearward in the vehicle, you may wish to move it to its rear-most position to make room for the child seat. You may also move the front seat forward to allow more room for the child seat.
2. Pull enough of the seat belt webbing from the retractor to pass it through the belt path of the child restraint. Do not twist the belt webbing in the belt path.
3. Slide the latch plate into the buckle until you hear a "click."
4. Pull on the webbing to make the lap portion tight against the child seat.
5. To lock the seat belt, pull down on the shoulder part of the belt until you have pulled all the seat belt webbing out of the retractor. Then, allow the webbing to retract back into the retractor. As the webbing retracts, you will hear a clicking sound. This means the seat belt is now in the Automatic Locking mode.
6. Try to pull the webbing out of the retractor. If it is locked, you should not be able to pull out any webbing. If the retractor is not locked, repeat step 5.
7. Finally, pull up on any excess webbing to tighten the lap portion around the child restraint while you push the child restraint rearward and downward into the vehicle seat.
8. If the child restraint has a top tether strap and the seating position has a top tether anchorage, connect the tether strap to the anchorage and tighten the tether strap. See the section "Installing Child Restraints Using the Top Tether Anchorage" for directions to attach a tether anchor.

9. Test that the child restraint is installed tightly by pulling back and forth on the child seat at the belt path. It should not move more than 1 inch (25.4 mm) in any direction.

Any seat belt system will loosen with time, so check the belt occasionally, and pull it tight if necessary.

Installing Child Restraints Using The Top Tether Anchorage:

WARNING!

Do not attach a tether strap for a rear-facing car seat to any location in front of the car seat, including the seat frame or a tether anchorage. Only attach the tether strap of a rear-facing car seat to the tether anchorage that is approved for that seating position, located behind the top of the vehicle seat. See the

(Continued)

WARNING! *(Continued)*

section "Lower Anchors and Tethers for CHildren (LATCH) Restraint System" for the location of approved tether anchorages in your vehicle.

1. Look behind the seating position where you plan to install the child restraint to find the tether anchorage. You may need to move the seat forward to provide better access to the tether anchorage. If there is no top tether anchorage for that seating position, move the child restraint to another position in the vehicle if one is available.

2. Route the tether strap to provide the most direct path for the strap between the anchor and the child seat. If your vehicle is equipped with adjustable rear head restraints, raise the head restraint, and where possible, route the tether strap under the head restraint and between the two posts. If not possible, lower the head restraint and pass the tether strap around the outboard side of the head restraint.
3. Attach the tether strap hook of the child restraint to the top tether anchorage as shown in the diagram.
4. Remove slack in the tether strap according to the child restraint manufacturer's instructions.

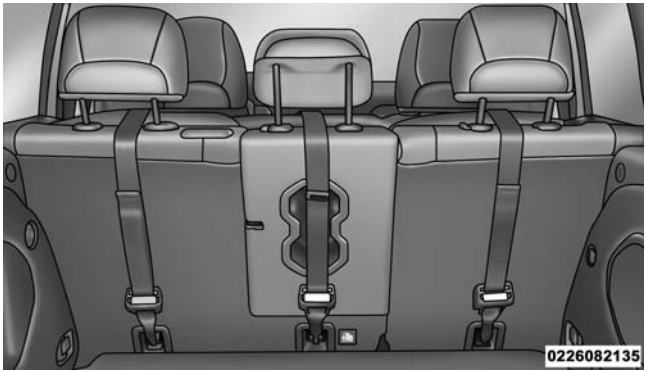

Rear Seat Tether Anchors

WARNING!

- **An incorrectly anchored tether strap could lead to increased head motion and possible injury to the child. Use only the anchorage position directly behind the child seat to secure a child restraint top tether strap.**
- **If your vehicle is equipped with a split rear seat, make sure the tether strap does not slip into the opening between the seatbacks as you remove slack in the strap.**

Transporting Pets

Air Bags deploying in the front seat could harm your pet. An unrestrained pet will be thrown about and possibly injured, or injure a passenger during panic braking or in a collision.

Pets should be restrained in the rear seat in pet harnesses or pet carriers that are secured by seat belts.

SAFETY TIPS

Transporting Passengers

NEVER TRANSPORT PASSENGERS IN THE CARGO AREA.

WARNING!

- **Do not leave children or animals inside parked vehicles in hot weather. Interior heat build-up may cause serious injury or death.**
- **It is extremely dangerous to ride in a cargo area, inside or outside of a vehicle. In a collision, people riding in these areas are more likely to be seriously injured or killed.**
- **Do not allow people to ride in any area of your vehicle that is not equipped with seats and seat belts.**
- **Be sure everyone in your vehicle is in a seat and using a seat belt properly.**

Exhaust Gas

WARNING!

Exhaust gases can injure or kill. They contain carbon monoxide (CO), which is colorless and odorless. Breathing it can make you unconscious and can eventually poison you. To avoid breathing (CO), follow these safety tips:

- **Do not run the engine in a closed garage or in confined areas any longer than needed to move your vehicle in or out of the area.**
- **If you are required to drive with the trunk/liftgate/ rear doors open, make sure that all windows are closed and the climate control BLOWER switch is set at high speed. DO NOT use the recirculation mode.**

(Continued)

WARNING! ***(Continued)***

- **If it is necessary to sit in a parked vehicle with the engine running, adjust your heating or cooling controls to force outside air into the vehicle. Set the blower at high speed.**

The best protection against carbon monoxide entry into the vehicle body is a properly maintained engine exhaust system.

Whenever a change is noticed in the sound of the exhaust system, when exhaust fumes can be detected inside the vehicle, or when the underside or rear of the vehicle is damaged, have a competent mechanic inspect the complete exhaust system and adjacent body areas for broken, damaged, deteriorated, or mispositioned parts. Open seams or loose connections could permit exhaust fumes to seep into the passenger compartment. In addition, inspect the exhaust system each time the vehicle is raised for lubrication or oil change. Replace as required.

Safety Checks You Should Make Inside The Vehicle

Seat Belts

Inspect the seat belt system periodically, checking for cuts, frays, and loose parts. Damaged parts must be replaced immediately. Do not disassemble or modify the system.

Front seat belt assemblies must be replaced after a collision. Rear seat belt assemblies must be replaced after a collision if they have been damaged (i.e., bent retractor, torn webbing, etc.). If there is any question regarding seat belt or retractor condition, replace the seat belt.

Air Bag Warning Light

The Air Bag warning light will turn on for four to eight seconds as a bulb check when the ignition switch is first turned to ON/RUN. If the light is either not on during starting, stays on, or turns on while driving, have the system inspected at an authorized dealer as soon as possible. This light will illuminate with a single chime when a fault with the Air Bag Warning Light has been detected, it will stay on until the fault is cleared. If the light comes on intermittently or remains on while driving, have an authorized dealer service the vehicle immediately. Refer to “Occupant Restraints” in “Things To Know Before Starting Your Vehicle” for further information.

Defroster

Check operation by selecting the defrost mode and place the blower control on high speed. You should be able to feel the air directed against the windshield. See your authorized dealer for service if your defroster is inoperable.

Floor Mat Safety Information

Always use floor mats designed to fit the footwell of your vehicle. Use only floor mats that leave the pedal area

unobstructed and that are firmly secured so that they cannot slip out of position and interfere with the pedals or impair safe operation of your vehicle in other ways.

WARNING!

Pedals that cannot move freely can cause loss of vehicle control and increase the risk of serious personal injury.

- **Always make sure that floor mats are properly attached to the floor mat fasteners.**
- **Never place or install floor mats or other floor coverings in the vehicle that cannot be properly secured to prevent them from moving and interfering with the pedals or the ability to control the vehicle.**
- **Never put floor mats or other floor coverings on top of already installed floor mats. Additional floor**

(Continued)

WARNING! ***(Continued)***

mats and other coverings will reduce the size of the pedal area and interfere with the pedals.

- **Check mounting of mats on a regular basis. Always properly reinstall and secure floor mats that have been removed for cleaning.**
- **Always make sure that objects cannot fall into the driver footwell while the vehicle is moving. Objects can become trapped under the brake pedal and accelerator pedal causing a loss of vehicle control.**
- **If required, mounting posts must be properly installed, if not equipped from the factory.**

Failure to properly follow floor mat installation or mounting can cause interference with the brake pedal and accelerator pedal operation causing loss of control of the vehicle.

Periodic Safety Checks You Should Make Outside The Vehicle

Tires

Examine tires for excessive tread wear and uneven wear patterns. Check for stones, nails, glass, or other objects lodged in the tread or sidewall. Inspect the tread for cuts and cracks. Inspect sidewalls for cuts, cracks, and bulges. Check the wheel nuts for tightness. Check the tires (including spare) for proper cold inflation pressure.

Lights

Have someone observe the operation of brake lights and exterior lights while you work the controls. Check turn signal and high beam indicator lights on the instrument panel.

Door Latches

Check for proper closing, latching, and locking.

Fluid Leaks

Check area under vehicle after overnight parking for fuel, engine coolant, oil, or other fluid leaks. Also, if gasoline fumes are detected, or if fuel or brake fluid leaks are suspected, the cause should be located and corrected immediately.

STARTING AND OPERATING

CONTENTS

■ STARTING THE ENGINE 321
- □ Tip Start Feature 322
- □ If Engine Fails To Start 322
- □ Cold Weather Operation 323
- □ Extended Park Starting. 324
- □ After Starting — Warming Up The Engine 325
- □ Stopping The Engine 325
- □ Turbocharger “Cool Down” — If Equipped. 326

■ ENGINE BREAK-IN RECOMMENDATIONS . . .326

■ ELECTRIC PARK BRAKE (EPB) 327
- □ Auto Park Brake 332
- □ SafeHold 332
- □ Brake Service Mode 333

■ MANUAL TRANSMISSION 334
- □ Shifting. 336
- □ Downshifting 337

■ AUTOMATIC TRANSMISSION 339
- □ Shift Lever 341
- □ Gear Ranges 343

- Transmission Limp Home Mode 349
- Key Ignition Park Interlock. 350
- Brake/Transmission Shift Interlock System. . . .350

■ SPEED CONTROL — IF EQUIPPED 351
- Activation. 352
- Setting A Desired Speed 352
- Deactivation 353
- Resume Speed. 353
- Varying The Speed. 353
- Accelerating For Passing 355

■ FOUR WHEEL DRIVE — JEEP ACTIVE DRIVE (4WD) AND JEEP ACTIVE DRIVE LOW (4WD LOW). 355
- Four Wheel Drive (4x4) 356

■ SELEC-TERRAIN 358
- Mode Selection Guide 358

■ FORWARD COLLISION WARNING (FCW) WITH MITIGATION — IF EQUIPPED 360
- Forward Collision Warning (FCW) With Mitigation Operation — If Equipped 360
- Turning FCW ON Or OFF 363
- Changing FCW Sensitivity 364
- FCW Limited Warning 364
- Service FCW Warning 365
- Precautions While Driving With FCW 366
- General Information 370

■ LANESENSE — IF EQUIPPED 370
- LaneSense Operation 370

- Turning LaneSense ON Or OFF 371
- LaneSense Warning Message 372
- Changing LaneSense Status 380

■ REAR PARKSENSE — IF EQUIPPED 381
- Rear ParkSense Sensors 381
- Enabling And Disabling Rear ParkSense 383
- Service The Rear ParkSense System 384
- ParkSense System Usage Precautions 385

■ REAR BACK UP CAMERA — IF EQUIPPED . . .386

■ TIRE PRESSURE MONITOR SYSTEM (TPMS) . .389
- Base System 392
- Premium System — If Equipped 395
- General Information 400

■ FUEL REQUIREMENTS 400
- 1.4L Turbo Engine 400
- 2.4L Engine 401
- Reformulated Gasoline 401
- Gasoline/Oxygenate Blends 402
- E-85 Usage In Non-Flex Fuel Vehicles 402
- MMT In Gasoline 403
- Materials Added To Fuel 403
- Fuel System Cautions 404
- Carbon Monoxide Warnings 405

■ ADDING FUEL 405

■ VEHICLE LOADING 409
- Certification Label 409

■ ON-ROAD DRIVING TIPS 411
■ OFF-ROAD DRIVING TIPS 412
□ When To Use 4WD LOW Range 412
□ Driving Through Water 412
□ Driving In Snow, Mud And Sand 413
□ Hill Climbing 414
□ Traction Downhill 415
□ After Driving Off-Road 415
■ POWER STEERING 416
■ TRAILER TOWING 417
□ Common Towing Definitions 417
□ Trailer Hitch Classification 420
□ Trailer Towing Weights (Maximum Trailer Weight Ratings) 421
□ Trailer And Tongue Weight 422
□ Towing Requirements 423
□ Towing Tips 428
■ RECREATIONAL TOWING. 430
□ Towing This Vehicle Behind Another Vehicle . .430
□ Recreational Towing. 431

STARTING THE ENGINE

Before starting your vehicle, adjust your seat, adjust the inside and outside mirrors, fasten your seat belt, and if present, instruct all other occupants to buckle their seat belts.

WARNING!

- **Never leave children alone in a vehicle, or with access to an unlocked vehicle.**
- **Allowing children to be in a vehicle unattended is dangerous for a number of reasons. A child or others could be seriously or fatally injured. Children should be warned not to touch the parking brake, brake pedal or the gear selector.**
- **Do not leave the Key Fob in or near the vehicle (or in a location accessible to children), and do not leave the ignition of a vehicle equipped with**

(Continued)

WARNING! ***(Continued)***

Keyless Enter-N-Go in the MAR/RUN mode. A child could operate power windows, other controls, or move the vehicle.

Start the engine with the shift lever in the NEUTRAL or PARK position. Apply the brake before shifting to any driving range.

Manual Transmission

Proceed as follows:

1. Set the Electric Park Brake (EPB) and put the shift lever in the NEUTRAL position.
2. Press the clutch pedal to the floor, without pressing the accelerator.
3. Cycle the ignition to the AVV/START position and release it as soon as the engine is started.

4. If the engine does not start, place the ignition in the STOP/OFF position and wait 10-15 seconds before attempting to restart the engine.

Automatic Transmission

Proceed as follows:

1. Set the Electric Park Brake (EPB) and put the shift lever in the PARK or NEUTRAL position.
2. Press on the brake pedal, without pressing the accelerator.
3. Cycle the ignition to the AVV/START position and release it as soon as the engine is started.
4. If the engine does not start, place the ignition in the STOP/OFF position and wait 10-15 seconds before attempting to restart the engine.

Tip Start Feature

Do not press the accelerator. Cycle the ignition switch briefly to the AVV/START position and release it. The starter motor will continue to run but will automatically disengage when the engine is running.

If Engine Fails To Start

WARNING!

Never pour fuel or other flammable liquid into the throttle body air inlet opening in an attempt to start the vehicle. This could result in flash fire causing serious personal injury.

If the engine fails to start after you have followed the "Normal Starting" or "Extreme Cold Weather" procedure, and has not experienced an extended park condition as identified in "Extended Park Starting" procedure it may be flooded. Push the accelerator pedal all the way to the

floor and hold it there. Crank the engine for no more than 15 seconds. This should clear any excess fuel in case the engine is flooded. Leave the ignition key in the MAR/RUN position, release the accelerator pedal and repeat the "Normal Starting" procedure.

CAUTION!

To prevent damage to the starter, do not continuously crank the engine for more than 25 seconds at a time. Wait 60 seconds before trying again.

WARNING!

- **Never pour fuel or other flammable liquid into the throttle body air inlet opening in an attempt to start the vehicle. This could result in flash fire causing serious personal injury.**

(Continued)

WARNING! ***(Continued)***

- **Do not attempt to push or tow your vehicle to get it started. Vehicles equipped with an automatic transmission cannot be started this way. Unburned fuel could enter the catalytic converter and once the engine has started, ignite and damage the converter and vehicle.**
- **If the vehicle has a discharged battery, booster cables may be used to obtain a start from a booster battery or the battery in another vehicle. This type of start can be dangerous if done improperly. Refer to "Jump-Starting" in "In Case Of Emergency" for further information.**

Cold Weather Operation

To ensure reliable starting under extreme cold conditions an externally powered electric block heater (available from your authorized dealer) is required for the 1.4L

Turbo engine below -20°F (-29°C) and for the 2.4L engine below -29°F (-34°C) and is recommended for the 2.4L engine below -20°F (-29°C).

To prevent possible engine damage while starting at low temperatures, this vehicle will inhibit engine cranking when the ambient temperature is less than -34°F (-35°C) and the oil temperature sensor reading indicates an engine block heater has not been used. The message "plug in engine heater" will be displayed in the instrument cluster when the ambient temperature is below -4°F (-20°C) at the time the engine is shut off as a reminder to avoid possible crank delays at the next cold start.

Extended Park Starting

NOTE: Extended Park condition occurs when the vehicle has not been started or driven for at least 30 days.

1. Install a battery charger or jumper cables to the battery to ensure a full battery charge during the crank cycle.
2. Cycle the ignition in the START position and release it when the engine starts.
3. If the engine fails to start within ten seconds, cycle the ignition to the STOP (OFF/LOCK) position, wait five seconds to allow the starter to cool, then repeat the Extended Park Starting procedure.
4. If the engine fails to start after eight attempts, allow the starter to cool for at least 10 minutes, then repeat the procedure.

CAUTION!

To prevent damage to the starter, do not crank continuously for more than 10 seconds at a time. Wait 10 to 15 seconds before trying again.

After Starting — Warming Up The Engine

Proceed as follows:

- Travel slowly, letting the engine run at a reduced RPM, without accelerating suddenly.
- It is recommended to wait until the engine coolant temperature gauge starts to rise for maximum performance.

Stopping The Engine

Vehicles Equipped With A Mechanical Key Fob:

To turn off the engine with, proceed as follows:

1. Park the car in a position that does not cause a traffic hazard.
2. Place the transmission in gear (models with a manual transmission) or place the transmission in PARK (P) (models with automatic transmission).
3. With the engine idling, place the ignition in the STOP/OFF position.
4. Remove the key from the ignition when the engine is shut off.

Vehicles Equipped With Electronic Key (Keyless Enter-N-Go):

To shut off the engine with vehicle speed greater than 5 mph (8 km/h) you must push and hold the ignition or push the START/STOP button three times consecutively within a few seconds. The engine will shut down and the ignition will be placed in the RUN position.

Turning Off the car (placing the ignition from the RUN position to the STOP position), the power supply to the accessories are maintained for a period of three minutes.

Opening the driver side door with the ignition RUN will sound a short chime, to remind the driver to place the ignition to STOP.

When the ignition is in the STOP/OFF position, the window switches remains active for three minutes. Opening a front door will cancel this function.

After severe driving, idle the engine to allow the temperature inside the engine compartment to cool before shutting off the engine.

Turbocharger "Cool Down" — If Equipped

This vehicle is equipped with an after-run pump to cool the turbocharger after the engine is shut off. Depending on the type of driving and the amount of cargo, the pump will run for up to 10 minutes after the engine has been shut off to circulate coolant through the turbocharger. Although the pump is rubber-mounted for quiet operation, it is normal to hear it running during this time.

ENGINE BREAK-IN RECOMMENDATIONS

A long break-in period is not required for the engine and drivetrain (transmission and axle) in your vehicle.

Drive moderately during the first 300 miles (500 km). After the initial 60 miles (100 km), speeds up to 50 or 55 mph (80 or 90 km/h) are desirable.

While cruising, brief full-throttle acceleration within the limits of local traffic laws contributes to a good break-in. Wide-open throttle acceleration in low gear can be detrimental and should be avoided.

The engine oil installed in the engine at the factory is a high-quality energy conserving type lubricant. Oil changes should be consistent with anticipated climate conditions under which vehicle operations will occur. For the recommended viscosity and quality grades, refer to "Maintenance Procedures" in "Maintaining And Caring For Your Vehicle."

CAUTION!

Never use Non-Detergent Oil or Straight Mineral Oil in the engine or damage may result.

NOTE: A new engine may consume some oil during its first few thousand miles (kilometers) of operation. This should be considered a normal part of the break-in and not interpreted as a problem.

ELECTRIC PARK BRAKE (EPB)

Your vehicle is equipped with an Electric Park Brake System (EPB) that offers simple operation, and some additional features that make the parking brake more convenient and useful.

The parking brake is primarily intended to prevent the vehicle from rolling while parked. Before leaving the vehicle, make sure that the parking brake is applied. Also, be certain to leave the transmission in PARK.

The EPB switch is located in the center console.

You can engage the EPB in two ways;

- Manually, by applying the park brake switch.
- Automatically, by enabling the Auto Park Brake feature in the customer programmable features section of the Uconnect settings or in “Safe Hold” conditions.

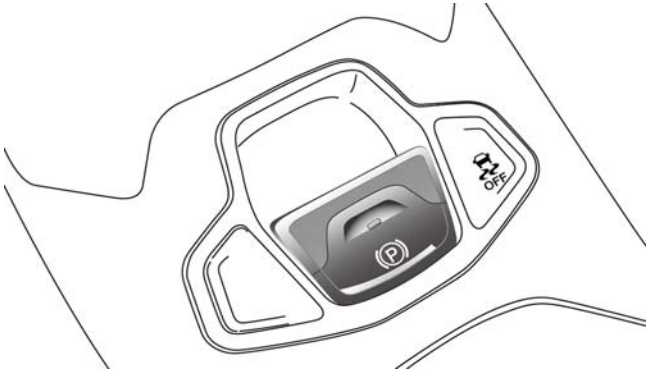

Electric Park Brake Switch

To apply the EPB manually, pull up on the switch momentarily. You may hear a slight whirring sound from the back of the vehicle while the EPB engages. Once the parking brake is fully engaged, the BRAKE warning lamp in the instrument cluster and an indicator on the switch will illuminate. If your foot is on the brake pedal while you apply the EPB, you may notice a small amount of brake pedal movement. The EPB can be applied even when the ignition switch is in the STOP/OFF position but the BRAKE warning lamp will not illuminate, however, it can only be released when the ignition switch is in the MAR/RUN position.

NOTE: The EPB fault lamp will illuminate if the EPB switch is held for longer than 10 seconds (static conditions) or 30 seconds (dynamic conditions) in either the released or applied position. The light will extinguish upon releasing the switch.

If the Auto Park Brake feature is enabled, the EPB will automatically engage whenever the transmission is moved into PARK, or with a manual transmission, when the ignition switch is in the STOP/OFF position. If your foot is on the brake pedal, you may notice a small amount of brake pedal movement while the EPB is engaging.

The electric park brake will be automatically released if the driver's seat belt is buckled and driver's intention to start (in forward or reverse direction) is recognized by the system

To release the EPB manually, the ignition switch must be in the MAR/RUN position. Put your foot on the brake pedal, then push the EPB switch down momentarily. You may hear a slight whirring sound from the back of the car while the parking brake disengages. You may also notice a small amount of movement in the brake pedal. Once the EPB is fully disengaged, The BRAKE warning lamp in the instrument cluster and the LED indicator on the switch will extinguish.

NOTE:

- When parking on a hill, it is important to turn the front wheels toward the curb on a downhill grade and away from the curb on an uphill grade. Apply the EPB before placing the shift lever in PARK, otherwise the load on the transmission locking mechanism may make it difficult to move the shift lever out of PARK. The EPB should always be applied whenever the driver is not in the vehicle.
- If the clutch pedal is released at the same time the gas pedal is pressed, the EPB will be automatically released (manual transmissions only).

WARNING!

- **Never use the PARK position as a substitute for the parking brake. Always apply the parking brake fully when parked to guard against vehicle movement and possible injury or damage.**
- **When leaving the vehicle, always remove the key fob from the ignition and lock your vehicle. If equipped with Keyless Enter-N-Go, always make sure the keyless ignition node is in "OFF" mode, remove the Key Fob from the vehicle and lock the vehicle**
- **Never leave children alone in a vehicle, or with access to an unlocked vehicle. Allowing children to be in a vehicle unattended is dangerous for a number of reasons. A child or others could be seriously or fatally injured. Children should be warned not to touch the parking brake, brake pedal or the transmission gear selector.**

(Continued)

WARNING! ***(Continued)***

- **Do not leave the Key Fob in or near the vehicle (or in a location accessible to children), and do not leave the ignition of a vehicle equipped with Keyless Enter-N-Go in the ON/RUN mode. A child could operate power windows, other controls, or move the vehicle.**
- **Be sure the parking brake is fully disengaged before driving; failure to do so can lead to brake failure and a collision.**
- **Always fully apply the parking brake when leaving your vehicle, or it may roll and cause damage or injury. Also be certain to leave the transmission in PARK. Failure to do so may allow the vehicle to roll and cause damage or injury.**

CAUTION!

If the Brake System Warning Light remains on with the parking brake released, a brake system malfunction is indicated. Have the brake system serviced by an authorized dealer immediately.

If exceptional circumstances should make it necessary to engage the EPB while the vehicle is in motion, maintain upward pressure on the EPB switch for as long as engagement is desired. The brake warning lamp could illuminate in case of the hydraulic system is not available. The rear stop lamps will also be illuminated automatically while the vehicle remains in motion.

To disengage the EPB while the vehicle is in motion, release the switch. If the vehicle is brought to a complete stop using the EPB, when the vehicle reaches approximately 1.9 mph (3 km/h) the EPB will remain engaged.

WARNING!

Driving the vehicle with the parking brake engaged, or repeated use of the parking brake to slow the vehicle may cause serious damage to the brake system; failure to do so can lead to brake failure and a collision.

In the unlikely event of a malfunction of the EPB system, a yellow EPB fault lamp will illuminate. This may be accompanied by the Brake warning lamp flashing. In this status some EPB functionalities may be deactivated. In this event, urgent service of the EPB system is required. Do not rely on the EPB to hold the vehicle stationary.

Auto Park Brake

The EPB can be programmed to be applied automatically whenever the vehicle speed is below 1.9 mph (3 km/h) and the automatic transmission is placed in PARK, or with a manual transmission, whenever the ignition switch is in the STOP/OFF position. Auto Park Brake is enabled and disabled by customer selection through the Customer Programmable Features section of the Uconnect Settings.

Any single Auto Park Brake application can be bypassed by pushing the EPB switch to the release position while the transmission is placed in PARK (automatic transmission) and the ignition is in the MAR/RUN position.

SafeHold

SafeHold is a safety feature of the EPB system that will engage the park brake automatically if the vehicle is left unsecured while the ignition switch is in MAR/RUN.

For automatic transmissions, the EPB will automatically engage if all of the following conditions are met:

- Vehicle speed is below 1.9 mph (3 km/h).
- There is no attempt to depress the brake pedal or accelerator pedal.
- The seat belt is unbuckled.
- The driver door is open.
- The vehicle is not in the PARK position.

For manual transmissions, the EPB will automatically engage if all of the following conditions are met:

- Vehicle speed is below 1.9 mph (3 km/h).
- There is no attempt to depress the brake pedal or accelerator pedal.
- The clutch pedal is not pressed.

- The seat belt is unbuckled.
- The driver door is open.

SafeHold can be temporarily bypassed by pushing the EPB Switch while the driver door is open and the brake pedal is pressed. Once manually bypassed, SafeHold will be enabled again once the vehicle reaches 12 mph (20 km/h) or the ignition is turned to the STOP/OFF position and back to MAR/RUN again.

Brake Service Mode

We recommend having your brakes serviced by your authorized dealer. You should only make repairs for which you have the knowledge and the right equipment. You should only enter Brake Service Mode during brake service.

When servicing your rear brakes, it may be necessary for you or your technician to push the rear piston into the rear caliper bore. With the electric park brake system, this can only be done after retracting the EPB actuator. The actuator retraction can be done easily by entering the Brake Service Mode through the Uconnect Settings in your vehicle. This menu based system will guide you through the steps necessary to retract the EPB actuator in order to perform rear brake service.

Service Mode has requirements that must be met in order to be activated:

- The vehicle must be at a standstill.
- The parking brake must be disabled.
- The transmission must be in park or neutral.
- The EPB switch not activated.
- The vehicle in ignition MAR/ON position.
- The brake pedal not pressed.

While in service mode, the EPB fault lamp will flash continuously while the ignition switch is MAR/ON.

NOTE: A dedicated message will appear in the EVIC if Brake Service Mode cannot be activated.

When brake service work is complete, the following steps must be followed to reset the parking brake system to normal operation:

- Ensure the vehicle is at a standstill.
- Press the brake pedal with moderate force.
- Apply the EPB Switch.

NOTE: A dedicated message will appear in the EVIC if Brake Service Mode cannot be deactivated.

WARNING!

You can be badly injured working on or around a motor vehicle. Do only that service work for which you have the knowledge and the right equipment. If

(Continued)

WARNING! ***(Continued)***

you have any doubt about your ability to perform a service job, take your vehicle to a competent mechanic.

MANUAL TRANSMISSION

WARNING!

You or others could be injured if you leave the vehicle unattended without having the parking brake fully applied. The parking brake should always be applied when the driver is not in the vehicle, especially on an incline.

CAUTION!

Never drive with your foot resting on the clutch pedal, or attempt to hold the vehicle on a hill with the clutch pedal partially engaged, as this will cause abnormal wear on the clutch.

NOTE: During cold weather, you may experience increased effort in shifting until the transmission fluid warms up. This is normal.

To shift the gears, press the clutch pedal to the floor and put the shift lever to the desired position (the diagram for the engagement of the gears is displayed on the handle of the lever).

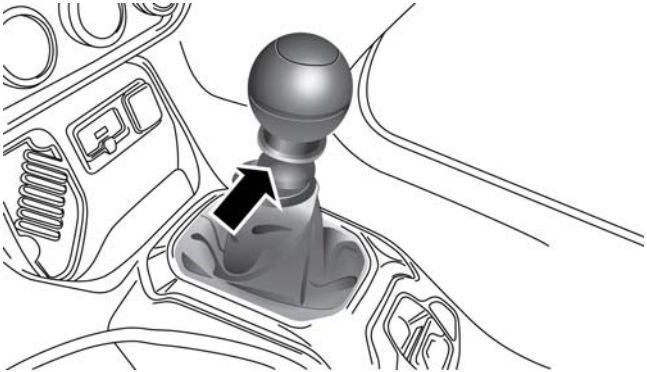

REVERSE Ring

To engage REVERSE gear from the NEUTRAL position lift the REVERSE ring, located below the knob and simultaneously move the lever to the left and then forward.

Shifting

Fully press the clutch pedal before shifting gears. As you release the clutch pedal, lightly press the accelerator pedal.

You should always use first gear when starting from a standing position.

Recommended Vehicle Shift Speeds

To utilize your manual transmission efficiently for fuel economy and performance, it should be upshifted as listed in the recommended shift speed chart. Shift at the vehicle speeds listed for acceleration. When heavily loaded or pulling a trailer, these recommended up-shift speeds may not apply.

Manual Transmission Shift Speeds in MPH (KM/H)					
All Engines	Gear Selection	2 to 3	3 to 4	4 to 5	5 to 6
	Accel.	24 (39)	34 (55)	47 (76)	56 (90)
	Cruise	19 (31)	27 (43)	37 (60)	41 (66)

Downshifting

Moving from a high gear down to a lower gear is recommended to preserve brakes when driving down steep hills. In addition, downshifting at the right time provides better acceleration when you desire to resume speed. Downshift progressively. Do not skip gears to avoid overspeeding the engine and clutch.

WARNING!

Do not downshift for additional engine braking on a slippery surface. The drive wheels could lose their grip, and the vehicle could skid.

CAUTION!

- **Skipping gears and downshifting into lower gears at higher vehicle speeds can damage the engine and clutch systems, Any attempt to shift into lower gear with clutch pedal depressed may result damage to the clutch system. Shifting into lower gear and releasing the clutch may result in engine damage.**
- **When descending a hill, be very careful to downshift one gear at a time to prevent overspeeding the engine which can cause engine damage, and/or clutch damage, even if the clutch pedal is pressed. If transfer case is in low range the vehicle speeds to cause engine and clutch damage are significantly lower.**

(Continued)

CAUTION! *(Continued)*

- **Failure to follow the maximum recommended downshifting speeds may cause the engine damage and/or damage the clutch, even if the clutch pedal is pressed.**
- **Descending a hill in low range with clutch pedal depressed could result in clutch damage.**

Maximum Recommended Downshift Speeds

CAUTION!

Failure to follow the maximum recommended downshifting speeds may cause the engine to overspeed and/or damage the clutch disc, even if the clutch pedal is pressed.

Manual Transmission Shift Speeds in MPH (KM/H)					
Gear Selection	6 to 5	5 to 4	4 to 3	3 to 2	2 to 1
Maximum Speed	80 (129)	70 (113)	50 (81)	30 (48)	15 (24)

CAUTION!

If you skip a gear while downshifting or downshift at too high of a vehicle speed, these conditions may cause the engine to overspeed if too low of a gear is selected and the clutch pedal is released. Damage to the clutch and the transmission can result from skipping a gear while downshifting or downshifting at too high of a vehicle speed even if the clutch pedal is held pressed (i.e., not released).

AUTOMATIC TRANSMISSION

Your vehicle is equipped with a state of the art, fuel efficient nine-speed transmission.

The transmission gear range (PRND) is displayed beside the shift lever and in the Electronic Vehicle Information Center (EVIC)/Driver Information Display (DID). To select a gear range, push the lock button on the shift lever and move the lever rearward or forward. You must also press the brake pedal to shift the transmission out of PARK, or to shift from NEUTRAL into DRIVE or REVERSE when the vehicle is stopped or moving at low speeds (refer to "Brake/Transmission Shift Interlock System" in this section). Select the DRIVE range for normal driving.

The electronically-controlled transmission provides a precise shift schedule. The transmission electronics are self-calibrating; therefore, the first few shifts on a new vehicle may be somewhat abrupt. This is a normal condition, and precision shifts will develop within a few hundred miles (kilometers).

WARNING!

- **It is dangerous to shift out of PARK or NEUTRAL if the engine speed is higher than idle speed. If your foot is not firmly pressing the brake pedal, the**

(Continued)

WARNING! *(Continued)*

vehicle could accelerate quickly forward or in REVERSE. You could lose control of the vehicle and hit someone or something. Only shift into gear when the engine is idling normally and your foot is firmly pressing the brake pedal.

- Unintended movement of a vehicle could injure those in or near the vehicle. As with all vehicles, you should never exit a vehicle while the engine is running. Before exiting a vehicle, always apply the parking brake, shift the transmission into PARK, turn the engine STOP/OFF, and remove the Key Fob. When the ignition is in the STOP/OFF (key removal) position, the transmission is locked in PARK, securing the vehicle against unwanted movement.

(Continued)

WARNING! *(Continued)*

- When leaving the vehicle, always make sure the ignition is in the STOP/OFF position, remove the Key Fob from the vehicle, and lock the vehicle.
- Never leave children alone in a vehicle, or with access to an unlocked vehicle. Allowing children to be in a vehicle unattended is dangerous for a number of reasons. A child or others could be seriously or fatally injured. Children should be warned not to touch the parking brake, brake pedal or the transmission shift lever.
- Do not leave the Key Fob in or near the vehicle (or in a location accessible to children), and do not leave the ignition (of a vehicle equipped with Keyless Enter-N-Go) in the MAR/RUN position. A child could operate power windows, other controls, or move the vehicle.

CAUTION!

Damage to the transmission may occur if the following precautions are not observed:

- **Shift into or out of PARK or REVERSE only after the vehicle has come to a complete stop.**
- **Do not shift between PARK, REVERSE, NEUTRAL, or DRIVE when the engine is above idle speed.**
- **Before shifting into any gear, make sure your foot is firmly pressing the brake pedal.**

NOTE: You must press and hold the brake pedal while shifting out of PARK.

Shift Lever

The transmission shift lever has PARK, REVERSE, NEUTRAL, DRIVE, and AutoStick (+/-) shift positions. Manual shifts can be made using the AutoStick shift control (refer to "AutoStick" in this section for further information). Toggling the shift lever forward (-) or rearward (+) while in the AutoStick position (beside the DRIVE position) will manually select the transmission gear, and will display the current gear in the instrument cluster as 1, 2, 3, etc.

NOTE: If the shift lever cannot be moved to the PARK, REVERSE, or NEUTRAL position (when pushed forward) it is probably in the AutoStick (+/-) position (beside the DRIVE position). In AutoStick mode, the transmission gear (1, 2, 3, etc.) is displayed in the instrument cluster. Move the shift lever to the right (into the DRIVE [D] position) for access to PARK, REVERSE, and NEUTRAL.

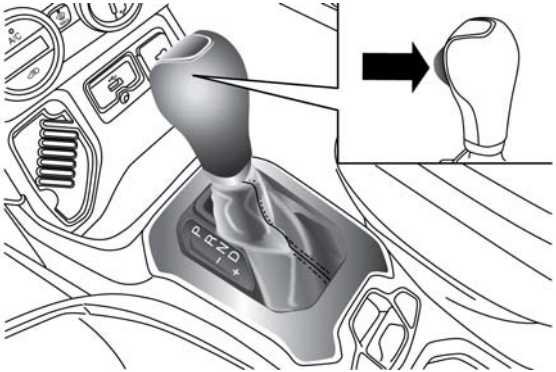

Shift Lever Lock Button

The electronically-controlled transmission provides a precise shift schedule. The transmission electronics are self-calibrating. The first few shifts on a new vehicle may be somewhat abrupt. This is a normal condition, and precision shifts will develop within a few hundred miles (kilometers).

The nine-speed transmission has been developed to meet the needs of FCA current and future lineup of FWD/AWD vehicles. Software and calibration is refined to optimize the customer's driving experience and fuel economy. By design, some vehicle and drive-line combinations utilize 9th gear only in very specific driving situations and conditions.

Only shift from DRIVE to PARK or REVERSE when the accelerator pedal is released and the vehicle is stopped. Be sure to keep your foot on the brake pedal when shifting between these gears.

DO NOT race the engine when shifting from PARK or NEUTRAL into another gear range.

CAUTION!

After selecting any gear range, wait a moment to allow the selected gear to engage before accelerating. This is especially important when the engine is cold.

Gear Ranges

PARK (P)

This range supplements the Electric Park Brake (EPB) by locking the transmission. The engine can be started in this range. Never attempt to use PARK while the vehicle is in motion. Apply the EPB when leaving the vehicle in this range.

When parking on a level surface, you may shift the transmission into PARK first, and then apply the EPB.

When parking on a hill, apply the EPB before shifting the transmission to PARK, otherwise the load on the transmission locking mechanism may make it difficult to move the shift lever out of PARK. As an added precaution, turn the front wheels toward the curb on a downhill grade and away from the curb on an uphill grade.

WARNING!

- **Never use the PARK position as a substitute for the Electric Parking Brake (EPB). Always apply the EPB fully when parked to guard against vehicle movement and possible injury or damage.**
- **Your vehicle could move and injure you and others if it is not completely in PARK. Check by trying to move the shift lever out of PARK with the brake pedal released. Make sure the transmission is in PARK before leaving the vehicle.**
- **It is dangerous to shift out of PARK or NEUTRAL if the engine speed is higher than idle speed. If your foot is not firmly pressing the brake pedal, the vehicle could accelerate quickly forward or in REVERSE. You could lose control of the vehicle and hit someone or something. Only shift into gear when the engine is idling normally and your foot is firmly pressing the brake pedal.**

(Continued)

WARNING! *(Continued)*

- **Unintended movement of a vehicle could injure those in or near the vehicle. As with all vehicles, you should never exit a vehicle while the engine is running. Before exiting a vehicle, always apply the EPB, shift the transmission into PARK, turn the engine OFF, and remove the Key Fob. When the ignition is in the STOP/OFF (key removal) position, the transmission is locked in PARK, securing the vehicle against unwanted movement.**
- **When leaving the vehicle, always make sure the ignition is in the STOP/OFF position, remove the Key Fob from the vehicle, and lock the vehicle.**
- **Never leave children alone in a vehicle, or with access to an unlocked vehicle. Allowing children to be in a vehicle unattended is dangerous for a number of reasons. A child or others could be**

(Continued)

WARNING! *(Continued)*

seriously or fatally injured. Children should be warned not to touch the parking brake, brake pedal or the shift lever.

- **Do not leave the Key Fob in or near the vehicle (or in a location accessible to children), and do not leave the ignition (of a vehicle equipped with Keyless Enter-N-Go) in the MAR/RUN position. A child could operate power windows, other controls, or move the vehicle.**

CAUTION!

- **Before moving the shift lever out of PARK, you must turn the ignition switch from the STOP/OFF position to the MAR/RUN position, and also press the brake pedal. Otherwise, damage to the shift lever could result.**

(Continued)

CAUTION! *(Continued)*

- **DO NOT race the engine when shifting from PARK or NEUTRAL into another gear range, as this can damage the drivetrain.**

The following indicators should be used to ensure that you have engaged the transmission into the PARK position:

- When shifting into PARK, press the LOCK button on the shift lever and firmly move the shift lever all the way forward until it stops and is fully seated.
- Look at the transmission gear position display and verify that it indicates the PARK position (P).
- With the brake pedal released, verify that the shift lever will not move out of PARK.

Reverse (R)

This range is for moving the vehicle backward. Shift into REVERSE only after the vehicle has come to a complete stop.

Neutral (N)

Use this range when the vehicle is standing for prolonged periods with the engine running. The engine may be started in this range. Apply the electric park brake and shift the transmission into PARK if you must leave the vehicle.

WARNING!

Do not coast in NEUTRAL and never turn off the ignition to coast down a hill. These are unsafe practices that limit your response to changing traffic or road conditions. You might lose control of the vehicle and have a collision.

CAUTION!

Towing the vehicle, coasting, or driving for any other reason with the transmission in NEUTRAL can cause severe transmission damage. Refer to "Recreational Towing" in "Starting And Operating" and "Towing A Disabled Vehicle" in "In Case Of Emergency" for further information.

Drive (D)

This range should be used for most city and highway driving. It provides the smoothest upshifts and downshifts, and the best fuel economy. The transmission automatically upshifts through all forward gears. The DRIVE position provides optimum driving characteristics under all normal operating conditions.

When frequent transmission shifting occurs (such as when operating the vehicle under heavy loading conditions, in hilly terrain, traveling into strong head winds or while towing a heavy trailer), use the AutoStick shift control (refer to "AutoStick" in this section for further information) to select a lower gear. Under these conditions, using a lower gear will improve performance and extend transmission life by reducing excessive shifting and heat buildup.

If the transmission temperature exceeds normal operating limits, the transmission controller may modify the transmission shift schedule, reduce engine torque, and/or expand the range of torque converter clutch engagement. This is done to prevent transmission damage due to overheating.

If the transmission becomes extremely hot, the "Transmission Temperature Warning Light" may illuminate and the transmission may operate differently until the transmission cools down.

During cold temperatures, transmission operation may be modified depending on engine and transmission

temperature as well as vehicle speed. This feature improves warm up time of the engine and transmission to achieve maximum efficiency. Engagement of the torque converter clutch, and shifts into 8th or 9th gear, are inhibited until the transmission fluid is warm. Normal operation will resume once the transmission temperature has risen to a suitable level.

AutoStick

AutoStick is a driver-interactive transmission feature providing manual shift control, giving you more control of the vehicle. AutoStick allows you to maximize engine braking, eliminate undesirable upshifts and downshifts, and improve overall vehicle performance. This system can also provide you with more control during passing, city driving, cold slippery conditions, mountain driving, trailer towing and many other situations.

Operation

When the shift lever is in the AutoStick position (beside the DRIVE position), it can be moved forward and rearward. This allows the driver to manually select the transmission gear being used. Moving the shift lever forward (-) triggers a downshift, and rearward (+) an upshift. The current gear is displayed in the instrument cluster.

NOTE: In AutoStick mode, the transmission will only shift up or down when the driver moves the shift lever rearward (+) or forward (-), except as described below.

- The transmission will automatically upshift when necessary to prevent engine over-speed.
- The transmission will automatically downshift as the vehicle slows (to prevent engine lugging) and will display the current gear.

- The transmission will automatically downshift to first or second gear (depending on model) when coming to a stop. After a stop, the driver should manually upshift (+) the transmission as the vehicle is accelerated.
- You can start out (from a stop) in first or second gear. Starting out in second gear can be helpful in snow or icy conditions. Tap the shift lever forward or rearward to select the desired gear after the vehicle is brought to a stop.
- If a requested downshift would cause the engine to over-speed, that shift will not occur.
- The system will ignore attempts to upshift at too low of a vehicle speed.
- Avoid using speed control when AutoStick is engaged because the transmission will not shift automatically.
- Transmission shifting will be more noticeable when AutoStick is enabled.
- The system may revert to automatic shift mode if a fault or overheat condition is detected.

To disengage AutoStick mode, return the shift lever to the DRIVE position. You can shift in or out of the AutoStick position at any time without taking your foot off the accelerator pedal.

WARNING!

Do not downshift for additional engine braking on a slippery surface. The drive wheels could lose their grip and the vehicle could skid, causing a collision or personal injury.

Transmission Limp Home Mode

Transmission function is electronically monitored for abnormal conditions. If a condition is detected that could result in transmission damage, Transmission Limp Home Mode is activated. In this mode, the transmission remains in fourth gear regardless of which forward gear is selected. PARK, REVERSE, and NEUTRAL will continue to operate. The Malfunction Indicator Light (MIL) may be illuminated. Limp Home Mode allows the vehicle to be driven to an authorized dealer for service without damaging the transmission.

In the event of a momentary problem, the transmission can be reset to regain all forward gears by performing the following steps:

1. Stop the vehicle.
2. Shift the transmission into PARK.
3. Turn the ignition switch to the STOP/OFF position.
4. Wait approximately 10 seconds.
5. Restart the engine.
6. Shift into the desired gear range. If the problem is no longer detected, the transmission will return to normal operation.

NOTE: Even if the transmission can be reset, we recommend that you visit your authorized dealer at your earliest possible convenience. Your authorized dealer has diagnostic equipment to determine if the problem could recur. If the transmission cannot be reset, authorized dealer service is required.

Key Ignition Park Interlock

Vehicles Equipped With Keyless Enter-N-Go:

This vehicle is equipped with a Key Ignition Park Interlock which requires the transmission to be in PARK before the ignition can be turned to the STOP/OFF position. Also, the transmission is locked in PARK whenever the ignition is in the STOP/OFF position.

Vehicles With Mechanical Key:

This vehicle is equipped with a Key Ignition Park Interlock which requires the transmission to be in PARK before the ignition can be turned to the STOP/OFF (key removal) position. The key can only be removed from the ignition when the ignition is in the STOP/OFF position, and the transmission is locked in PARK whenever the ignition is in the STOP/OFF position.

If the vehicle's battery becomes discharged, the key will be trapped in the ignition switch even when the shift lever is in PARK. To extract the key, refer to "Ignition Key Removal Override" in "In Case Of Emergency".

Brake/Transmission Shift Interlock System

This vehicle is equipped with a Brake Transmission Shift Interlock system (BTSI) that holds the shift lever in PARK unless the brakes are applied. To shift the transmission out of PARK, the ignition switch must be turned to the MAR/RUN position (engine running or not) and the brake pedal must be pressed.

The brake pedal must also be pressed before pushing the button on the shift lever to shift from NEUTRAL into DRIVE or REVERSE when the vehicle is stopped or moving at low speeds.

SPEED CONTROL — IF EQUIPPED

When engaged, the Electronic Speed Control takes over accelerator operations at speeds greater than 25 mph (40 km/h).

The Electronic Speed Control buttons are located on the right side of the steering wheel.

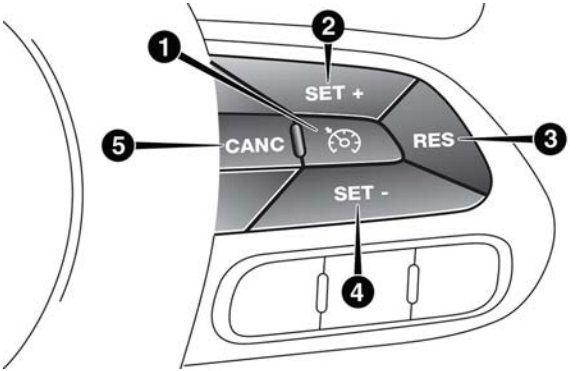

Electronic Speed Control Buttons

1 — ON/OFF
2 — SET+/ACCEL
3 — RESUME
4 — SET-/DECEL
5 — CANCEL

NOTE:

- In order to ensure proper operation, the Electronic Speed Control System has been designed to shut down if multiple Speed Control functions are operated at the same time. If this occurs, the Electronic Speed Control System can be reactivated by pushing the Electronic Speed Control ON/OFF button and resetting the desired vehicle set speed.
- The Electronic Speed Control function will not work in 4WD Low Range.

Activation

Push the ON/OFF button to activate the Electronic Speed Control. The Cruise Indicator Light in the Electronic Vehicle Information Center (EVIC) or Driver Information Display (DID) will illuminate. To turn the system off, push the ON/OFF button a second time. The Cruise Indicator Light will turn off. The system should be turned off when not in use.

WARNING!

Leaving the Electronic Speed Control system on when not in use is dangerous. You could accidentally set the system or cause it to go faster than you want. You could lose control and have an accident. Always leave the system OFF when you are not using it.

Setting A Desired Speed

Turn the Electronic Speed Control ON.

NOTE: The vehicle should be traveling at a steady speed and on level ground before pushing the SET (+) or SET (-) button.

When the vehicle has reached the desired speed, push the SET (+) or SET (-) button and release. Release the accelerator and the vehicle will operate at the selected speed.

Deactivation

A soft tap on the brake pedal, pushing the CANCEL button, or normal brake pressure while slowing the vehicle will deactivate the Electronic Speed Control without erasing the set speed from memory.

Pushing the ON/OFF button or turning the ignition switch OFF erases the set speed from memory.

Resume Speed

To resume a previously set speed, push the RES button and release. Resume can be used at any speed above 20 mph (32 km/h).

Varying The Speed

To Increase Speed

When the Electronic Speed Control is set, you can increase speed by pushing the SET + button.

The driver's preferred units can be selected through the Uconnect system if equipped. Refer to "Uconnect Settings" in Multimedia" for more information. The speed increment shown is dependant on the chosen speed unit of U.S. (mph) or Metric (km/h):

U.S. Speed (mph)

- Pushing the SET + button once will result in a 1 mph increase in set speed. Each subsequent tap of the button results in an increase of 1 mph.
- If the button is continually pushed, the set speed will continue to increase until the button is released, then the new set speed will be established.

Metric Speed (km/h)

- Pushing the SET **+** button once will result in a 1 km/h increase in set speed. Each subsequent tap of the button results in an increase of 1 km/h.
- If the button is continually pushed, the set speed will continue to increase until the button is released, then the new set speed will be established.

To Decrease Speed

When the Electronic Speed Control is set, you can decrease speed by pushing the SET **-** button.

The driver's preferred units can be selected through the Uconnect system if equipped. Refer to "Uconnect Settings" in "Multimedia" for more information. The speed increment shown is dependant on the chosen speed unit of U.S. (mph) or Metric (km/h):

U.S. Speed (mph)

- Pushing the SET **-** button once will result in a 1 mph decrease in set speed. Each subsequent tap of the button results in a decrease of 1 mph.
- If the button is continually pushed, the set speed will continue to decrease until the button is released, then the new set speed will be established.

Metric Speed (km/h)

- Pushing the SET **-** button once will result in a 1 km/h decrease in set speed. Each subsequent tap of the button results in a decrease of 1 km/h.
- If the button is continually pushed, the set speed will continue to decrease until the button is released, then the new set speed will be established.

Accelerating For Passing

Push the accelerator as you would normally. When the pedal is released, the vehicle will return to the set speed.

FOUR WHEEL DRIVE — JEEP ACTIVE DRIVE (4WD) AND JEEP ACTIVE DRIVE LOW (4WD LOW)

Your vehicle may be equipped with a Power Transfer Unit (PTU). This system is automatic with no driver inputs or additional driving skills required. Under normal driving conditions, the front wheels provide most of the traction. If the front wheels begin to lose traction, power is shifted automatically to the rear wheels. The greater the front wheel traction loss, the greater the power transfer to the rear wheels.

Additionally, on dry pavement under heavy throttle input (where one may have no wheel spin), torque will be sent to the rear in a preemptive effort to improve vehicle launch and performance characteristics.

CAUTION!

All wheels must have the same size and type tires. Unequal tire sizes must not be used. Unequal tire size may cause failure of the power transfer unit.

Four Wheel Drive (4x4)

The four wheel drive (4WD) is fully automatic in normal driving mode.

NOTE: It is not possible to carry out the change of mode when the vehicle exceeds the speed of 75 mph (120 km/h).

Enabling Four Wheel Drive (4x4)

The buttons for the activation of four wheel drive are located on the device Selec-Terrain and allow you to select the following:

- 4WD LOCK
- 4WD LOW — (Trailhawk models only)

Active Drive Control — If Equipped

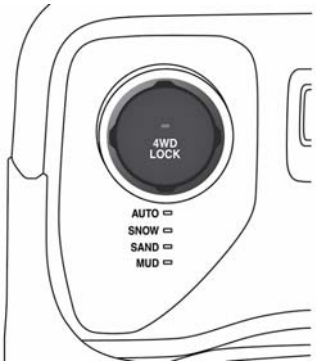

Selec-Terrain Switch

The Power Transfer Unit (PTU) is locked to ensure immediate availability of torque to the rear drive axles. This feature is selectable in AUTO mode and automatic in the other driving mode. 4WD LOCK can be enabled by the following ways:

- When the 4WD LOCK button is pushed.

- When the Selec-Terrain switch is rotated from AUTO to any other off-road modes.

Active Drive With Low Control — (Trailhawk models only)

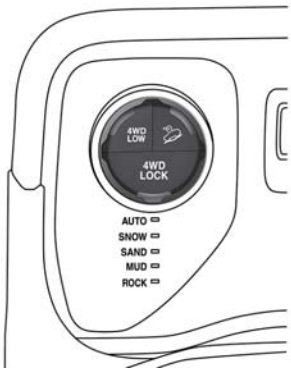

Selec-Terrain Switch (Trailhawk)

The 4WD LOW mode helps to improve the off-road performance in all modes. To enable 4WD Low please follow the steps below:

Enabling 4WD LOW

With the vehicle stationary, the ignition in the MAR/RUN or with the engine running, shift the transmission into DRIVE, REVERSE or NEUTRAL and push the button once 4WD LOW. The EVIC/DID will display the message "4WD LOW" once the shift is complete.

NOTE:

- Both LOCK and LOW LEDs will blink and then become active on the Selec-Terrain switch until the shift is complete.
- The EVIC display will illuminate the "4WD Low" icon.

Disabling 4WD LOW

To disable the 4WD LOW mode, the vehicle must be stationary and the transmission shifted into NEUTRAL. Push the 4WD LOW button once.

SELEC-TERRAIN

Selec-Terrain combines the capabilities of the vehicle control systems, along with driver input, to provide the best performance for all terrains.

Mode Selection Guide

Rotate the Selec-Terrain knob to select the desired mode.

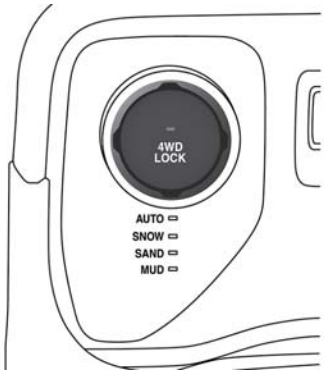

Selec-Terrain Switch

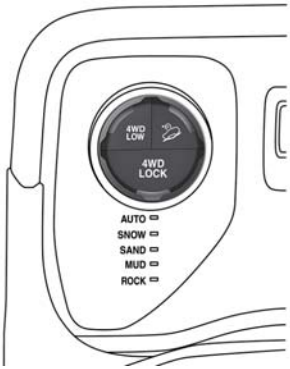

Selec-Terrain Switch (Trailhawk)

- **AUTO**: This four-wheel drive operation is a continuous operation, is fully automatic and can be used on and off road. This mode balances traction to ensure maneuverability and acceleration improvement compared to a vehicle with two wheel drive. This mode also reduces fuel consumption, since it allows the disconnect of the drive shaft where conditions permit.
- **SNOW**: This mode allows you to have greater stability under conditions of bad weather. For use on and off road on surfaces with poor traction, such as roads covered with snow. When in SNOW mode (depending on certain operating conditions), the transmission may use second gear (rather than first gear) during launches, to minimize wheel slippage.
- **SAND**: For off-road driving or use on surfaces with poor traction, such as sandy bottoms. The transmission is set to provide maximum traction.
- **MUD**: For off-road driving or use on surfaces with poor traction, such as roads covered by mud or wet grass.

- **ROCK** (Trailhawk only): This mode is only available in 4WD LOW range. The device sets the vehicle to maximize traction and allow the highest steering capacity for off-road surfaces. This mode gives you the maximum performance off-road. Use for low speed obstacles such as large rocks, deep ruts, etc.

NOTE:

- Rock mode is only available on the vehicles equipped with the Off-Road package.
- Activate the Hill Descent Control or Selec Speed Control for steep downhill control. See "Electronic Brake Control System" in this section for further information.

FORWARD COLLISION WARNING (FCW) WITH MITIGATION — IF EQUIPPED

Forward Collision Warning (FCW) With Mitigation Operation — If Equipped

The Forward Collision Warning (FCW) system with mitigation provides the driver with audible warnings, visual warnings (within the EVIC/DID), and may apply a brake jerk to warn the driver when it detects a potential frontal collision. The warnings and limited braking are intended to provide the driver with enough time to react, avoid or mitigate the potential collision.

NOTE:

- FCW monitors the information from the forward looking sensors as well as the Electronic Brake Controller (EBC), to calculate the probability of a forward collision. When the system determines that a forward collision is probable, the driver will be provided with audible and visual warnings and may provide a brake jerk warning.
- If the driver does not take action based upon these progressive warnings, then the system will provide a limited level of active braking to help slow the vehicle and mitigate the potential forward collision. If the driver reacts to the warnings by braking and the system determines that the driver intends to avoid the collision by braking but has not applied sufficient brake force, the system will compensate and provide additional brake force as required.

Vehicles With A Manual Transmission: After the end of the intervention of automatic braking, the engine could stall, unless the driver can depress the clutch pedal.

Vehicles With Automatic Transmission: After the end of the intervention of automatic braking, the transmission may remain in last gear stored: therefore the car could lurch forward, once the brakes release a few seconds later. If the Forward Collision Warning with Mitigation event stops the vehicle completely, the system will hold the vehicle at standstill for two seconds and then release the brakes.

If a Forward Collision Warning with Mitigation event begins at a speed below 20 mph (32 km/h), the system may provide the maximum braking possible to mitigate the potential forward collision. If the Forward Collision Warning with Mitigation event stops the vehicle completely, the system will hold the vehicle at standstill for two seconds and then release the brakes.

FCW Message

When the system determines a collision with the vehicle in front of you is no longer probable, the warning message will be deactivated.

NOTE:

- The minimum speed for FCW activation is 4 mph (7 km/h).
- The maximum speed for FCW activation is 124 mph (200 km/h).
- The FCW alerts may be triggered on objects other than vehicles such as guard rails or sign posts based on the course prediction. This is expected and is a part of normal FCW activation and functionality.
- The FCW system is intended for on-road use only. If the vehicle is taken off-road, the FCW system should be deactivated to prevent unnecessary warnings to the surroundings.
- If the vehicle enters 4WD Low Range, the FCW system will be automatically deactivated.

- The active braking is enabled only if the front seat belts are fastened.
- The active braking is disabled when a trailer is connected with a Mopar Trailer Towing system. If the vehicle is equipped with an aftermarket system, it is recommended that the Active Braking is turned off manually.

WARNING!

Forward Collision Warning (FCW) is not intended to avoid a collision on its own, nor can FCW detect every type of potential collision. The driver has the responsibility to avoid a collision by controlling the vehicle via braking and steering. Failure to follow this warning could lead to serious injury or death.

Turning FCW ON Or OFF

The forward collision menu setting is located in the Uconnect settings.

NOTE: The default status of FCW is "Warning + Active Braking," this allows the system to warn you of a possible collision with the vehicle in front of you and enable the active braking.

- Changing the FCW status to "Off" deactivates the system, so no warning or active braking will be available in case of a possible collision
- Changing the FCW status to "Only warning" prevents the system from providing limited active braking, or additional brake support if the driver is not braking adequately in the event of a potential frontal collision, but maintains the audible and visual warnings.

Changing the status of the system is only possible with the vehicle at a complete stop.

NOTE: The FCW system state is not kept in memory from one key cycle to the next. If the system is turned OFF, it will turn On when the vehicle is restarted.

Changing FCW Sensitivity

By changing the settings on the menu of the Uconnect system, you can change the sensitivity of the system by choosing one of the following three options: "Near", "Medium" or "Far". Refer to "Multimedia" for further information.

The default option is "Medium". This setting provides that the system notify the driver of a possible accident with the vehicle ahead of it when the latter is at a standard distance, intermediate between the other two possible settings.

By setting the sensitivity of the system to "Far", the system will warn the driver of a possible accident with the vehicle in front when the latter is at a greater distance, giving you the chance to act on the brakes in a more limited and gradual. This setting gives the driver the maximum possible time of reaction to prevent a possible accident.

By changing the option to "Near", the system will warn the driver of a possible accident with the vehicle ahead of it when the latter is a reduced distance. This setting offers a reaction time to the driver lower than the settings "Medium" and "Far", in the case of a potential accident, while a more dynamic driving of the car.

The setting of the sensitivity of the system is maintained in memory when the engine is switched off.

FCW Limited Warning

If the EVIC/DID displays "FCW Limited Functionality" or "FCW Limited Functionality Wipe Front Windshield" momentarily, there may be a condition that limits FCW functionality. Although the vehicle is still drivable under normal conditions, the active braking may not be fully available. Once the condition that limited the system

performance is no longer present, the system will return to its full performance state. If the problem persists, see your authorized dealer.

Service FCW Warning

If the system turns off, and the EVIC/DID displays:

- FCW Unavailable Service Required

This indicates there is an internal system fault. Although the vehicle is still drivable under normal conditions, have the system checked by an authorized dealer.

"Wipe Front Radar Sensor In Front Of Vehicle" Warning

The "FCW Front Radar Sensor Temporarily Blocked" warning will display when conditions temporarily limit system performance. This most often occurs at times of poor visibility, such as in snow or heavy rain. The system may also become temporarily blinded due to obstructions, such as mud, dirt or ice. In these cases, the EVIC/DID will display "FCW Front Radar Sensor Temporarily Blocked" and the system will deactivate.

The "FCW Front Radar Sensor Temporarily Blocked" message can sometimes be displayed while driving in highly reflective areas (i.e. tunnels with reflective tiles, or ice and snow). The system will recover after the vehicle has left these areas. Under rare conditions, when the radar is not tracking any vehicles or objects in its path this warning may temporarily occur.

If weather conditions are not a factor, the driver should examine the sensor. It may require cleaning or removal of an obstruction. The sensor is located behind the lower grille. In absence of visible obstructions on the bumper, it could be necessary to wipe off the radar directly on the surface, after having the radar cover removed. It's recommended that your authorized dealer perform's this operation.

NOTE:

- If the "FCW Front Radar Sensor Temporarily Blocked" message occurs frequently (e.g. more than once on every trip) without any snow, rain, mud, or other obstruction, have the radar sensor realigned at your authorized dealer.
- Installing a snow plow, front-end protector, an after-market grille or modifying the grille is not recommended. Doing so may block the sensor and inhibit FCW operation.

Precautions While Driving With FCW

In certain driving conditions, such as:

- Driving in the vicinity of a curve
- Small vehicles and/or not aligned to the lane
- Lane changing of other vehicles
- Passing of vehicles in an oncoming intersection

The intervention of the system could be unexpected or delayed. The driver must therefore always pay particular attention, while maintaining control of the car to drive in complete safety.

Driving In The Vicinity Of A Curve

Entering or exiting a large curve, the system could detect the presence of a vehicle that is in front of the car, but that does not preside in the same lane. In cases such as this, the system might respond.

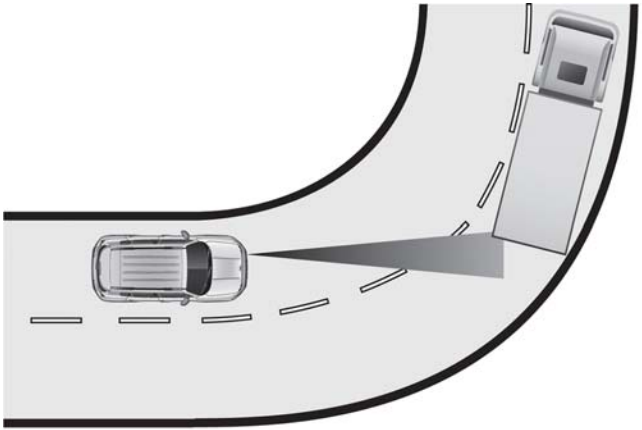

Driving In The Vicinity Of A Curve

Small Vehicles And/Or Not Aligned To The Lane

The system is not able to detect the presence of vehicles that are in front of the car but placed outside the field of action of the radar sensor and could therefore not react in the presence of small vehicles such as bicycles or motorcycles.

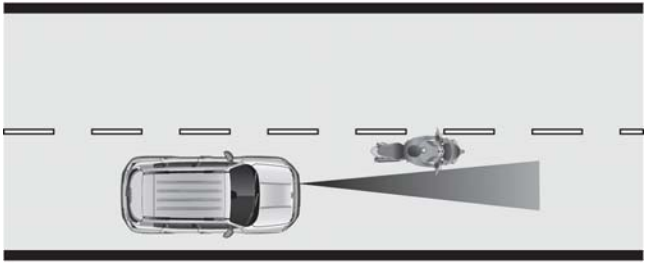

Small Vehicles And/Or Not Aligned To The Lane

Lane Changing Of Other Vehicles

Vehicles that suddenly change lane, while standing in the traffic lane of their car and inside the field of action of the radar sensor may cause the intervention of the system.

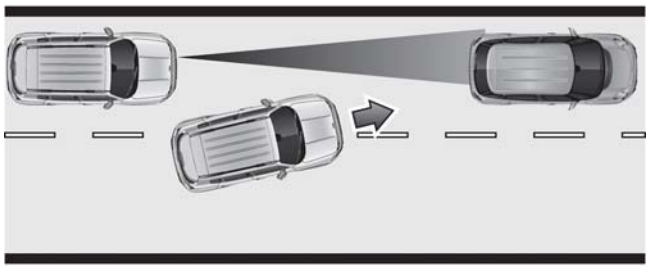

Lane Changing Of Other Vehicles

Passing Of Vehicles In An Oncoming Intersection

The system could temporarily react to a vehicle that crossed the range of the radar sensor, in an oncoming intersection.

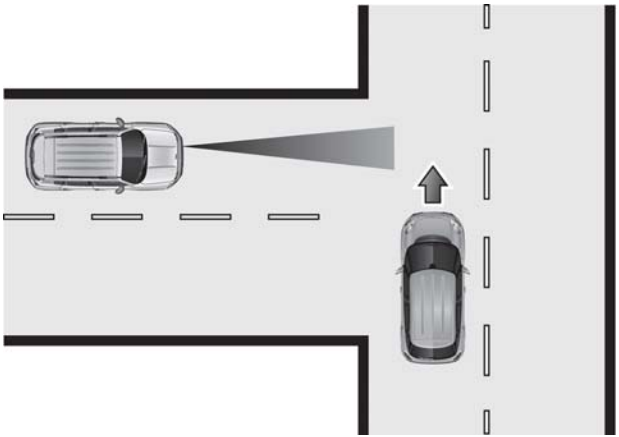

Passing Of Vehicles In An Oncoming Intersection

General Information

This vehicle has systems that operate on radio frequency that comply with Part 15 of the Federal Communications Commission (FCC) rules and with Industry Canada Standards RSS- GEN/210/220/310.

Operation is subject to the following two conditions:

1. The device may not cause harmful interference.
2. The device must accept any interference received, including interference that may cause undesired operation of the device.

Changes or modifications to any of these systems by other than an authorized service facility could void authorization to use this equipment.

LANESENSE — IF EQUIPPED

LaneSense Operation

The LaneSense system is operational at speeds above 37 mph (60 km/h) and below 112 mph (180 km/h). The LaneSense system uses a forward looking camera to detect lane markings and measure vehicle position within the lane boundaries.

When both lane markings are detected and the driver unintentionally drifts out of the lane (no turn signal applied), the LaneSense system provides a haptic warning in the form of torque applied to the steering wheel to prompt the driver to remain within the lane boundaries. If the driver continues to unintentionally drift out of the lane, the LaneSense system provides a visual warning through the Electronic Vehicle Information Center (EVIC) or Driver Information Display (DID) to prompt the driver to remain within the lane boundaries.

The driver may manually override the haptic warning by applying torque into the steering wheel at any time.

When only a single lane marking is detected and the driver unintentionally drifts across the lane marking (no turn signal applied), the LaneSense system provides a visual warning through the EVIC/DID to prompt the driver to remain within the lane. When only a single lane marking is detected, a haptic (torque) warning will not be provided.

NOTE: When operating conditions have been met, the LaneSense system will monitor if the driver's hands are on the steering wheel and provides an audible warning to the driver when the driver's hands are not detected on the steering wheel. The system will cancel if the driver does not return their hands to the wheel.

Turning LaneSense ON Or OFF

The default status of LaneSense is "OFF".

The LaneSense button is located on the switch panel below the Uconnect display.

To turn the LaneSense system ON, push the LaneSense button (LED turns on). A "Lane Sense On" message is shown in the EVIC/DID.

To turn the LaneSense system OFF, push the LaneSense button once (LED turns off).

NOTE: The LaneSense system will retain the last system state ON or OFF from the last ignition cycle when the ignition is changed to the ON/RUN position.

LaneSense Warning Message

The LaneSense system will indicate the current lane drift condition through the Electronic Vehicle Information Center (EVIC) or Driver Information Display (DID).

3.5 EVIC Screen — If Equipped

When the LaneSense system is ON, the lane lines are gray when both of the lane boundaries have not been detected and the LaneSense indicator is solid white.

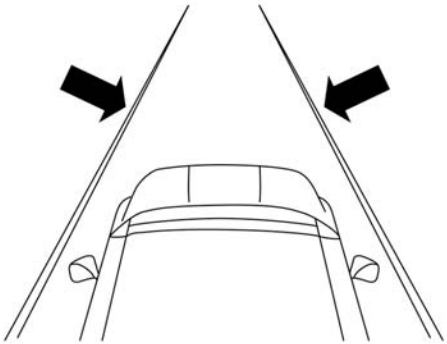

System ON (Gray Lines/White Indicator)

Left Lane Departure — Only Left Lane Detected

- When the LaneSense system is ON, the LaneSense indicator is solid white when only the left lane marking has been detected and the system is ready to provide visual warnings in the EVIC if an unintentional lane departure occurs.
- When the LaneSense system senses the lane has been approached and is in a lane departure situation, the left thick lane line flashes from white to gray, the left thin line remains solid white and the LaneSense indicator changes from solid white to flashing yellow.

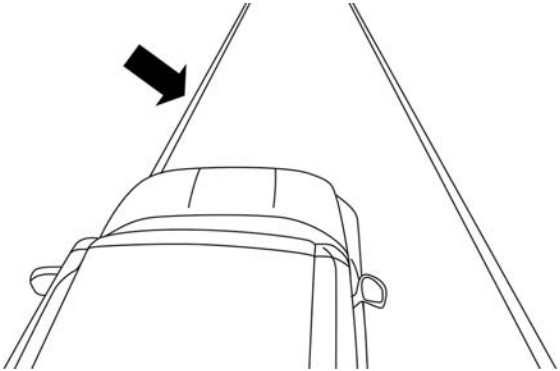

Lane Approached (Flashing White To Gray Thick Line/Flashing Yellow Indicator)

NOTE: The LaneSense system operates with the similar behavior for a right lane departure when only the right lane marking has been detected.

Left Lane Departure — Both Lanes Detected

- When the LaneSense system is ON, the lane lines turn from gray to white to indicate that both of the lane markings have been detected. The LaneSense indicator is solid green when both lane markings have been detected and the system is "armed" to provide visual warnings in the EVIC and a torque warning in the steering wheel if an unintentional lane departure occurs.

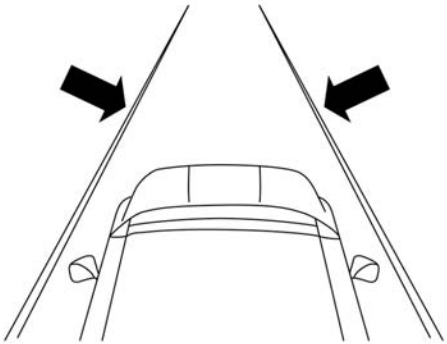

Lanes Sensed (White Lines/Green Indicator)

- When the LaneSense system senses a lane drift situation, the left thick lane line and the left thin line turn solid white. The LaneSense indicator changes from solid green to solid yellow. At this time torque is applied to the steering wheel in the opposite direction of the lane boundary.

- For example: If approaching the left side of the lane, the steering wheel will turn to the right.

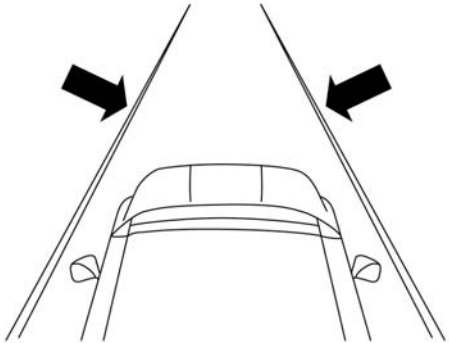

Lane Sensed (Solid White Thick Line, Solid White Thin Line/Solid Yellow Indicator)

- When the LaneSense system senses the lane has been approached and is in a lane departure situation, the left thick lane line flashes from white to gray, the left thin line remains solid white and the LaneSense indicator changes from solid yellow to flashing yellow. At this time, torque is applied to the steering wheel in the opposite direction of the lane boundary.

- For example: If approaching the left side of the lane, the steering wheel will turn to the right.

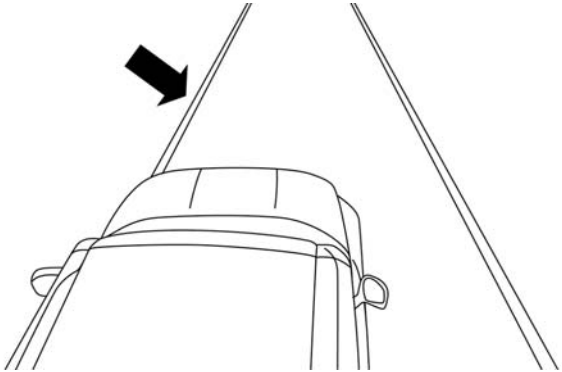

Lane Approached (Flashing White To Gray Thick Line, Solid White Thin Line/Flashing Yellow Indicator)

NOTE: The LaneSense system operates with the similar behavior for a right lane departure.

7.0 DID Screen — If Equipped

When the LaneSense system is ON, the lane lines are gray when both of the lane boundaries have not been detected and the LaneSense indicator is solid white.

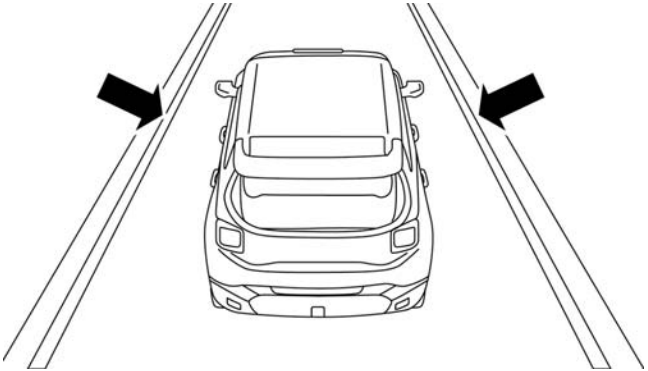

System ON (Gray Lines/White Indicator)

Left Lane Departure — Only Left Lane Detected

- When the LaneSense system is ON, the LaneSense indicator is solid white when only the left lane marking has been detected and the system is ready to provide visual warnings in the DID if an unintentional lane departure occurs.
- When the LaneSense system senses the lane has been approached and is in a lane departure situation, the left thick lane line flashes yellow (on/off), the left thin line remains solid yellow and the LaneSense indicator changes from solid white to flashing yellow.

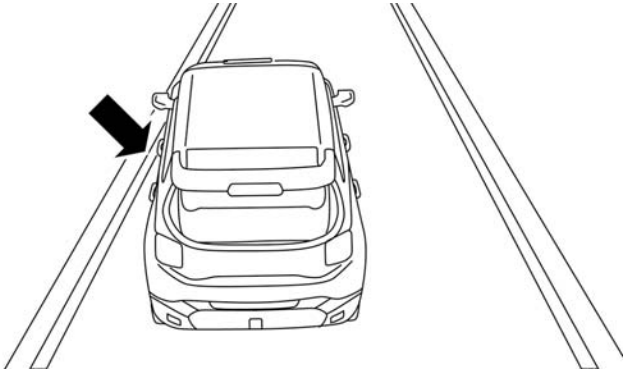

Lane Approached (Flashing Yellow Thick Line, Solid Yellow Thin Line/Flashing Yellow Indicator)

NOTE: The LaneSense system operates with the similar behavior for a right lane departure when only the right lane marking has been detected.

Left Lane Departure — Both Lanes Detected

- When the LaneSense system is ON, the lane lines turn from gray to white to indicate that both of the lane markings have been detected. The LaneSense indicator is solid green when both lane markings have been detected and the system is "armed" to provide visual warnings in the DID and a torque warning in the steering wheel if an unintentional lane departure occurs.

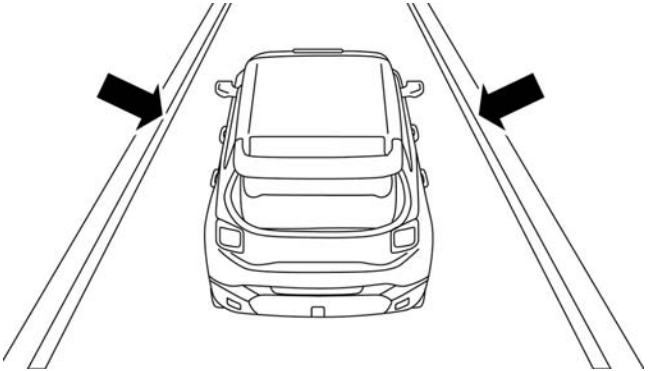

Lanes Sensed (White Lines/Green Indicator)

- When the LaneSense system senses a lane drift situation, the left thick lane line and left thin line turn solid yellow. The LaneSense indicator changes from solid green to solid yellow. At this time torque is applied to the steering wheel in the opposite direction of the lane boundary.

- For example: If approaching the left side of the lane the steering wheel will turn to the right.

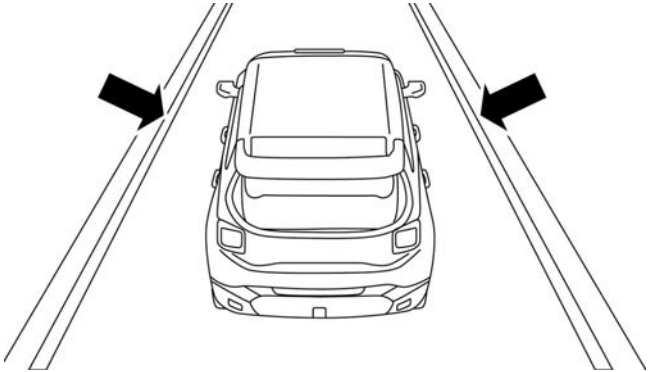

Lane Sensed (Solid Yellow Thick Line, Solid Yellow Thin Line/Solid Yellow Indicator)

- When the LaneSense system senses the lane has been approached and is in a lane departure situation, the left thick lane line flashes yellow (on/off) and the left thin line remains solid yellow. The LaneSense indicator changes from solid yellow to flashing yellow. At this time torque is applied to the steering wheel in the opposite direction of the lane boundary.

- For example: If approaching the left side of the lane the steering wheel will turn to the right.

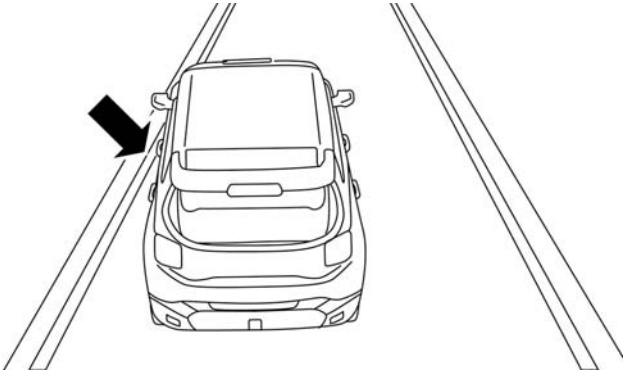

Lane Approached (Flashing Yellow Thick Line, Solid Yellow Thin Line/Flashing Yellow Indicator)

NOTE: The LaneSense system operates with the similar behavior for a right lane departure.

Changing LaneSense Status

The LaneSense system has settings to adjust the intensity of the torque warning and the warning zone sensitivity (early/late) that you can configure through the Uconnect system screen. Refer to "Uconnect Settings" in "Multimedia" for further information.

NOTE:

- When enabled the system operates above 37 mph (60 km/h) and below 112 mph (180 km/h).
- Use of the turn signal suppresses the warnings.
- The system will not apply torque to the steering wheel whenever a safety system engages. (anti-lock brakes, traction control system, electronic stability control, forward collision warning, etc.).

REAR PARKSENSE — IF EQUIPPED

The Rear ParkSense system provides visual and audible indications of the distance between the rear fascia and a detected obstacle when backing up, e.g. during a parking maneuver. Refer to ParkSense System Usage Precautions for limitations of this system and recommendations.

Rear ParkSense will retain the last system state (enabled or disabled) from the last ignition cycle when the ignition is changed to the MAR/RUN position.

Rear ParkSense can be active only when the shift lever is in REVERSE.

Rear ParkSense Sensors

The four Rear ParkSense sensors, located in the rear fascia/bumper, monitor the area behind the vehicle that is within the sensors' field of view. The sensors can detect obstacles from approximately 12 inches (30 cm) up to 59 inches (150 cm) from the rear fascia/bumper in the horizontal direction, depending on the location, type and orientation of the obstacle.

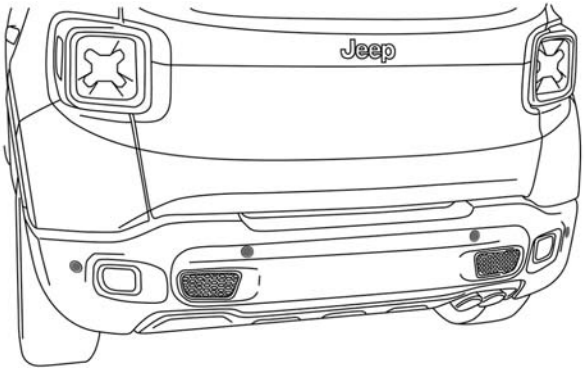

Parking Sensors

Chime

By shifting the vehicle in REVERSE and in the case of the presence of a rear obstacle, an acoustic signal that varies with the distance of the obstacle from the bumper is activated.

The frequency of the acoustic signal:

- Increases with the distance between car and object decreases.
- Becomes continuous when the distance that separates the car from the obstacle is less than approximately 12 inches (30 cm), while terminates immediately if the distance to the obstacle increases.
- Remains constant if the distance between car and obstacle remains unchanged. If this situation occurs for the side sensors, the signal is stopped after approximately three seconds to avoid, for example, it activates in case of maneuver along a wall.

When the system emits a beeping sound, the volume of the Uconnect system, if turned on, is automatically lowered by Rear ParkSense.

Detection Distances

If the sensors detect more obstacles, it is taken into account only what is the shorter distance.

Instrument Cluster Display

Rear ParkSense is displayed on the instrument cluster only if you have selected the item "beep and display" inside the "Settings" menu of the Uconnect system.

If an obstacle is detected in the center rear region, the display will show a single solid arc in the center rear region and will produce a one-half second tone. As the vehicle moves closer to the obstacle, the display will show the single arc moving closer to the vehicle and the sound tone will change from slow, to fast, to continuous.

If an obstacle is detected in the left and/or right rear region, the display will show a single flashing arc in the left and/or right rear region and will produce a fast sound tone. As the vehicle moves closer to the obstacle, the display will show the single arc moving closer to the vehicle and the tone will change from fast to continuous.

In general, the car is closest to the obstacle when the display shows only a flashing arc and the chime becomes continuous.

The color on the display depends on the distance and location of the obstacle.

Enabling And Disabling Rear ParkSense

Rear ParkSense can be enabled and disabled with the Rear ParkSense switch.

When the Rear ParkSense switch is pressed to disable the system, the instrument cluster will display the “PARKSENSE DISABLED” message for approximately five seconds. Refer to “Electronic Vehicle Information Center (EVIC)” or “Driver Information Display (DID)” in “Getting To Know Your Instrument Panel” for further information. When the shift lever is moved to REVERSE and the system is disabled, the EVIC/DID will display the “PARKSENSE DISABLED” message for as long as the vehicle is in REVERSE.

The Rear ParkSense switch LED will be ON when Rear ParkSense is disabled or requires service. The Rear ParkSense switch LED will be OFF when the system is enabled. If the Rear ParkSense switch is pushed, and requires service, the Rear ParkSense switch LED will blink momentarily, and then the LED will be ON.

Rear ParkSense will remember the previous state when the vehicle is switch off.

CAUTION!

After turning off the ignition, the Rear ParkSense remains in this setting until the next key cycle, even in the case of changing the setting of starting MAR/RUN to STOP/OFF and then again in MAR/RUN.

Service The Rear ParkSense System

During vehicle start up, when the Rear ParkSense System has detected a faulted condition, the instrument cluster will actuate a single chime, once per ignition cycle, and it will display the "PARKSENSE UNAVAILABLE WIPE REAR SENSORS" or the "PARKSENSE UNAVAILABLE SERVICE REQUIRED" message. Refer to "Electronic Vehicle Information Center (EVIC) or Driver Information Display (DID)" for further information. When the shift lever is moved to REVERSE and the system has detected a faulted condition, the EVIC/DID will display the "PARKSENSE UNAVAILABLE WIPE REAR SENSORS" or "PARKSENSE UNAVAILABLE SERVICE REQUIRED" message for as long as the vehicle is in REVERSE. Under this condition, Rear ParkSense will not operate.

If "PARKSENSE UNAVAILABLE WIPE REAR SENSORS" appears in the Electronic Vehicle Information Center (EVIC) or Driver Information Display (DID) make sure the outer surface and the underside of the rear fascia/bumper is clean and clear of snow, ice, mud, dirt or other obstructions and then cycle the ignition. If the message continues to appear, see an authorized dealer.

If "PARKSENSE UNAVAILABLE SERVICE REQUIRED" appears in the EVIC/DID, see an authorized dealer.

ParkSense System Usage Precautions

NOTE:

- Ensure that the outer surface and the underside of the rear bumper is clean and clear of snow, ice, mud, dirt or other obstruction to keep the Rear ParkSense system operating properly.
- Jackhammers, large trucks, and other vibrations could affect the performance of Rear ParkSense.
- Clean the Rear ParkSense sensors regularly, taking care not to scratch or damage them. The sensors must not be covered with ice, snow, slush, mud, dirt or debris. Failure to do so can result in the system not working properly. The Rear ParkSense system might not detect an obstacle behind the fascia/bumper, or it could provide a false indication that an obstacle is behind the fascia/bumper.
- Objects such as bicycle carriers, etc., must not be placed within 12 inches (30 cm) from the rear fascia/bumper while driving the vehicle. Failure to do so can result in the system misinterpreting a close object as a sensor problem, causing a failure indication to be displayed in the instrument cluster.

CAUTION!

- **ParkSense is only a parking aid and it is unable to recognize every obstacle, including small obstacles. Parking curbs might be temporarily detected or not detected at all. Obstacles located above or below the sensors will not be detected when they are in close proximity.**
- **The vehicle must be driven slowly when using ParkSense in order to be able to stop in time when an obstacle is detected. It is recommended that the driver looks over his/her shoulder when using ParkSense.**

WARNING!

- **Drivers must be careful when backing up even when using ParkSense. Always check carefully behind your vehicle, look behind you, and be sure to check for pedestrians, animals, other vehicles, obstructions, and blind spots before backing up. You are responsible for safety and must continue to pay attention to your surroundings. Failure to do so can result in serious injury or death.**
- **Before using ParkSense, it is strongly recommended that the ball mount and hitch ball assembly is disconnected from the vehicle when the vehicle is not used for towing. Failure to do so can result in injury or damage to vehicles or obstacles because the hitch ball will be much closer to the obstacle than the rear fascia when the loudspeaker sounds the continuous tone. Also, the sensors**

(Continued)

WARNING! ***(Continued)***

could detect the ball mount and hitch ball assembly, depending on its size and shape, giving a false indication that an obstacle is behind the vehicle.

If it's necessary to keep the trailer hitch and hitch ball assembly mounted for a long period, it is possible to filter out the trailer hitch and hitch ball assembly presence in sensor field of view. The filtering operation must be performed only by an authorized dealer.

REAR BACK UP CAMERA — IF EQUIPPED

The Rear Back Up Camera that allows you to see an on-screen image of your vehicle's rear surroundings when the shift lever is put into REVERSE. The image will be displayed on the touchscreen display along with a note to "check entire surroundings" across the top of the screen. After five seconds this note will disappear. The camera is located above the rear license plate.

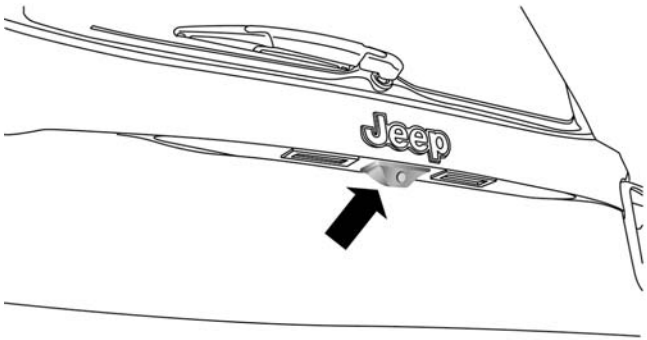

Parking Camera

When the vehicle is shifted out of REVERSE (with camera delay turned OFF), the rear camera mode is exited and the navigation or audio screen appears again.

When the vehicle is shifted out of REVERSE (with camera delay turned ON), the camera image will continue to be displayed for up to 10 seconds after shifting out of REVERSE unless the vehicle speed exceeds 8 mph (13 km/h), the vehicle is shifted into PARK or the ignition is switched to the STOP/OFF position.

A touchscreen button to disable the camera is available when the vehicle is not in REVERSE. Display of the camera image after shifting out of REVERSE can be disabled via Uconnect Settings.

When enabled, active guide lines are overlaid on the image to illustrate the width of the vehicle and its projected backup path based on the steering wheel position.

When enabled, fixed guide lines are overlaid on the image to illustrate the width of the vehicle.

Different colored zones indicate the distance to the rear of the vehicle.

The following table shows the approximate distances for each zone:

Zone	Distance to the rear of the vehicle
Red	0 - 1 ft (0 - 30 cm)
Yellow	1 ft - 3 ft (30 cm - 1 m)
Green	3 ft or greater (1 m or greater)

NOTE: If snow, ice, mud, or any foreign substance builds up on the camera lens, clean the lens, rinse with water, and dry with a soft cloth. Do not cover the lens.

WARNING!

Drivers must be careful when backing up even when using the Rear Back Up Camera. Always check carefully behind your vehicle, and be sure to check for pedestrians, animals, other vehicles, obstructions, or

(Continued)

WARNING! ***(Continued)***

blind spots before backing up. You are responsible for the safety of your surroundings and must continue to pay attention while backing up. Failure to do so can result in serious injury or death.

CAUTION!

- **To avoid vehicle damage, Rear Back Up Camera should only be used as a parking aid. The Rear Back Up Camera is unable to view every obstacle or object in your drive path.**
- **To avoid vehicle damage, the vehicle must be driven slowly when using the Rear Back Up Camera to be able to stop in time when an obstacle is seen. It is recommended that the driver look frequently over his/her shoulder when using the Rear Back Up Camera.**

TIRE PRESSURE MONITOR SYSTEM (TPMS)

The Tire Pressure Monitor System (TPMS) will warn the driver of a low tire pressure based on the vehicle recommended cold placard pressure.

The tire pressure will vary with temperature by approximately 1 psi (7 kPa) for every 12°F (6.5°C). This means that when the outside temperature decreases, the tire pressure will decrease. Tire pressure should always be set based on cold inflation tire pressure. This is defined as the tire pressure after the vehicle has not been driven for at least three hours, or driven less than 1 mile (1.6 km) after a three hour period. The cold tire inflation pressure must not exceed the maximum inflation pressure molded into the tire sidewall. Refer to "Tires – General Information" in "Starting And Operating" for information on how to properly inflate the vehicle's tires. The tire pressure will also increase as the vehicle is driven. This is normal and there should be no adjustment for this increased pressure.

The TPMS will warn the driver of a low tire pressure if the tire pressure falls below the low-pressure warning limit for any reason, including low temperature effects and natural pressure loss through the tire.

The TPMS will continue to warn the driver of low tire pressure as long as the condition exists, and will not turn off until the tire pressure is at or above the recommended cold placard pressure. Once the low tire pressure warning (Tire Pressure Monitoring Telltale Light) illuminates, you must increase the tire pressure to the recommended cold placard pressure in order for the "Tire Pressure Monitoring Telltale Light" to turn off.

NOTE: When filling warm tires, the tire pressure may need to be increased up to an additional 4 psi (30 kPa) above the recommended cold placard pressure in order to turn the Tire Pressure Monitoring Telltale Light off.

The system will automatically update and the "Tire Pressure Monitoring Telltale Light" will turn off once the system receives the updated tire pressures. The vehicle may need to be driven for up to 20 minutes above 15 mph (24 km/h) in order for the TPMS to receive this information.

For example, your vehicle may have a recommended cold (parked for more than three hours) placard pressure of 33 psi (227 kPa). If the ambient temperature is 68°F (20°C) and the measured tire pressure is 28 psi (193 kPa), a temperature drop to 20°F (-7°C) will decrease the tire pressure to approximately 24 psi (165 kPa). This tire pressure is low enough to turn ON the "Tire Pressure Monitoring Telltale Light." Driving the vehicle may cause the tire pressure to rise to approximately 28 psi (193 kPa), but the "Tire Pressure Monitoring Telltale Light" will still be on. In this situation, the "Tire Pressure Monitoring Telltale Light" will turn off only after the tires are inflated to the vehicle's recommended cold placard pressure value.

NOTE: When filling warm tires, the tire pressure may need to be increased up to an additional 4 psi (30 kPa) above the recommended cold placard pressure in order to turn the Tire Pressure Monitoring Telltale Light off.

CAUTION!

- **The TPMS has been optimized for the original equipment tires and wheels. TPMS pressures and warning have been established for the tire size equipped on your vehicle. Undesirable system operation or sensor damage may result when using replacement equipment that is not of the same size, type, and/or style. Aftermarket wheels can cause sensor damage.**
- **Using aftermarket tire sealants may cause the Tire Pressure Monitoring System (TPMS) sensor to become inoperable. After using an aftermarket tire sealant it is recommended that you take your vehicle to an authorized dealership to have your sensor function checked.**

(Continued)

CAUTION! ***(Continued)***

- **After inspecting or adjusting the tire pressure always reinstall the valve stem cap. This will prevent moisture and dirt from entering the valve stem, which could damage the TPMS sensor.**

NOTE:

- The TPMS is not intended to replace normal tire care and maintenance, or to provide warning of a tire failure or condition.
- The TPMS should not be used as a tire pressure gauge while adjusting your tire pressure.
- Driving on a significantly underinflated tire causes the tire to overheat and can lead to tire failure. Underinflation also reduces fuel efficiency and tire tread life, and may affect the vehicle's handling and stopping ability.

- The TPMS is not a substitute for proper tire maintenance, and it is the driver's responsibility to maintain correct tire pressure using an accurate tire pressure gauge, even if underinflation has not reached the level to trigger illumination of the "Tire Pressure Monitoring Telltale Light".
- Seasonal temperature changes will affect tire pressure, and the TPMS will monitor the actual tire pressure in the tire.

Base System

The Tire Pressure Monitor System (TPMS) uses wireless technology with wheel rim mounted electronic sensors to monitor tire pressure levels. Sensors, mounted to each wheel as part of the valve stem, transmit tire pressure readings to the receiver module.

NOTE: It is particularly important for you to check the tire pressure in all of the tires on your vehicle monthly and to maintain the proper pressure.

The TPMS consists of the following components:

- Receiver Module
- Four Tire Pressure Monitoring Sensors
- Tire Pressure Monitoring Telltale Light

Tire Pressure Monitoring Low Pressure Warnings

The "Tire Pressure Monitoring Telltale Light" will illuminate in the instrument cluster, a "LOW TIRE PRESSURE" message will display in the instrument cluster, an "Inflate to XX" message will be displayed and a chime will sound when tire pressure is low in one or more of the four active road tires. Should this occur, you should stop as soon as possible, check the inflation pressure of each tire on your vehicle, and inflate each tire to the vehicle's recommended cold placard pressure

value as shown in the "Inflate to XX" message. Once the system receives the updated tire pressures, the system will automatically update and the "Tire Pressure Monitoring Telltale Light" will turn off.

NOTE: When filling warm tires, the tire pressure may need to be increased up to an additional 4 psi (30 kPa) above the recommended cold placard pressure in order to turn the Tire Pressure Monitoring Telltale Light off. The vehicle may need to be driven for up to 20 minutes above 15 mph (24 km/h) in order for the TPMS to receive this information.

Service TPMS Warning

When a system fault is detected, the "Tire Pressure Monitoring Telltale Light" will flash on and off for 75 seconds and then remain on solid. The system fault will also sound a chime. If the ignition is cycled, this sequence will repeat, providing the system fault still exists. The "Tire Pressure Monitoring Telltale Light" will turn off when the fault condition no longer exists. A system fault can occur due to any of the following:

1. Jamming due to electronic devices or driving next to facilities emitting the same radio frequencies as the TPMS sensors.
2. Installing some form of aftermarket window tinting that affects radio wave signals.
3. Lots of snow or ice around the wheels or wheel housings.
4. Using tire chains on the vehicle.
5. Using wheels/tires not equipped with TPMS sensors.

Vehicles With Compact Spare or non-Matching Full Size Spare

1. The compact spare tire or non-matching full size spare tire does not have a tire pressure monitoring sensor. Therefore, the TPMS will not monitor the pressure in the spare tire.
2. If you install the compact or non-matching full size spare tire in place of a road tire that has a pressure below the low-pressure warning limit, a chime will sound and the "TPMS Telltale Light" and "LOW TIRE PRESSURE" and "Inflate to XX" messages will turn on upon the next ignition cycle.
3. After driving the vehicle for up to 20 minutes above 15 mph (24 km/h), the "TPMS Telltale Light" will flash on and off for 75 seconds and then remain on solid.
4. For each subsequent ignition cycle, a chime will sound and the "TPMS Telltale Light" will flash on and off for 75 seconds and then remain on solid.
5. Once you repair or replace the original road tire and reinstall it on the vehicle in place of the compact spare or non-matching full size spare, the TPMS will update automatically and the "TPMS Telltale Light" will turn off, as long as no tire pressure is below the low-pressure warning limit in any of the four active road tires. The vehicle may need to be driven for up to 20 minutes above 15 mph (24 km/h) in order for the TPMS to receive this information.

Premium System — If Equipped

The Tire Pressure Monitor System (TPMS) uses wireless technology with wheel rim mounted electronic sensors to monitor tire pressure levels. Sensors, mounted to each wheel as part of the valve stem, transmit tire pressure readings to the receiver module.

NOTE: It is particularly important for you to check the tire pressure in all of the tires on your vehicle monthly and to maintain the proper pressure.

The TPMS consists of the following components:

- Receiver Module
- Four Tire Pressure Monitoring Sensors
- Various Tire Pressure Monitoring System messages, which display in the Electronic Vehicle Information Center (EVIC) or Driver Information Display (DID).
- Tire Pressure Monitoring Telltale Light

Tire Pressure Monitoring Low Pressure Warnings

The "Tire Pressure Monitoring Telltale Light" will illuminate in the instrument cluster and a chime will sound when tire pressure is low in one or more of the four active road tires. In addition, the Electronic Vehicle Information Center (EVIC)/Driver information Display (DID) will display a "Tire Low" message for a minimum of five seconds, an "Inflate to XX" message and a graphic showing the pressure values of each tire with the low tire pressure values in a different color.

Tire Pressure Monitoring Low Pressure Warning

Should this occur, you should stop as soon as possible and inflate the tires with low pressure (those in a different color in the EVIC/DID graphic) to the vehicle's recommended cold placard pressure value as shown in the "Inflate to XX" message. Once the system receives the updated tire pressures, the system will automatically

update, the pressure values in the graphic display in the EVIC/DID will return to their original color, and the "Tire Pressure Monitoring Telltale Light" will turn off.

NOTE: When filling warm tires, the tire pressure may need to be increased up to an additional 4 psi (30 kPa) above the recommended cold placard pressure in order to turn the Tire Pressure Monitoring Telltale Light off. The vehicle may need to be driven for up to 20 minutes above 15.5 mph (25 km/h) in order for the TPMS to receive this information.

SERVICE TPMS Warning

When a system fault is detected, the "Tire Pressure Monitoring Telltale Light" will flash on and off for 75 seconds and then remain on solid. The system fault will also sound a chime. In addition, the EVIC/DID will display a "SERVICE TPM SYSTEM" message for a minimum of five seconds and then display dashes (- -) in place of the pressure value to indicate which sensor is not being received.

If the ignition key is cycled, this sequence will repeat, providing the system fault still exists. If the system fault no longer exists, the "Tire Pressure Monitoring Telltale Light" will no longer flash, and the "SERVICE TPM SYSTEM" message will no longer display, and a pressure value will display in place of the dashes. A system fault can occur due to any of the following:

1. Jamming due to electronic devices or driving next to facilities emitting the same radio frequencies as the TPMS sensors.
2. Installing some form of aftermarket window tinting that affects radio wave signals.

3. Lots of snow or ice around the wheels or wheel housings.
4. Using tire chains on the vehicle.
5. Using wheels/tires not equipped with TPMS sensors.

Vehicles With Matching Full-Size Spare

1. The matching full size spare wheel and tire assembly has a tire pressure monitoring sensor that can be monitored by the TPMS.
2. If you install the full size spare in place of a road tire that has a pressure below the low-pressure warning limit, a chime will sound and the "TPMS Telltale Light" will turn on upon the next ignition key cycle. In addition, the EVIC/DID will display a Tire Low message, an "Inflate to XX" message and a graphic showing the low tire pressure value in a different color.
3. After driving the vehicle for up to 20 minutes above 15.5 mph (25 km/h) the "TPMS Telltale Light" will turn OFF, as long as no tire pressure is below the low-pressure warning limit in any of the four active road tires.
4. The EVIC/DID will display a graphic showing the tire pressure value in the same color as the other pressure values in place of the different color low tire pressure value. The EVIC/DID will also display a "SPARE LOW PRESSURE" message to remind you to service the flat tire.

Vehicles With Compact Spare or Non-Matching Full Size Spare

1. The compact spare tire or non-matching full size does not have a tire pressure monitoring sensor. Therefore, the TPMS will not monitor the pressure in the compact spare tire.

2. If you install the compact or non-matching full size spare tire in place of a road tire that has a pressure below the low-pressure warning limit, upon the next ignition key cycle, the "TPMS Telltale Light" will remain on and a chime will sound. In addition, the graphic in the EVIC/DID will still display a different color pressure value and an "Inflate to XX" message.
3. After driving the vehicle for up to 20 minutes above 15.5 mph (25 km/h), the "TPMS Telltale Light" will flash on and off for 75 seconds and then remain on solid. In addition, the EVIC/DID will display a "SERVICE TPM SYSTEM" message for five seconds and then display dashes (- -) in place of the pressure value.
4. For each subsequent ignition key cycle, a chime will sound, the "TPMS Telltale Light" will flash on and off for 75 seconds and then remain on solid, and the EVIC/DID will display a "SERVICE TPM SYSTEM" message for five seconds and then display dashes (- -) in place of the pressure value.
5. Once you repair or replace the original road tire and reinstall it on the vehicle in place of the compact spare or non-matching full size, the TPMS will update automatically. In addition, the "TPMS Telltale Light" will turn off and the graphic in the EVIC/DID will display a new pressure value instead of dashes (- -), as long as no tire pressure is below the low-pressure warning limit in any of the four active road tires. The vehicle may need to be driven for up to 20 minutes above 15.5 mph (25 km/h) in order for the TPMS to receive this information.

General Information

This device complies with Part 15 of the FCC rules and RSS-210 of Industry Canada. Operation is subject to the following two conditions:

(1) This device may not cause harmful interference.

(2) This device must accept any interference received, including interference that may cause undesired operation.

NOTE: Changes or modifications not expressly approved by the party responsible for compliance could void the user's authority to operate the equipment.

FUEL REQUIREMENTS

1.4L Turbo Engine

This engine is designed to meet all emission regulations and provide satisfactory fuel economy and performance when using high-quality unleaded "regular" gasoline having an octane rating of 87 using the (R+M)/2 method. For optimum performance and fuel economy the use of 91 octane or higher is recommended.

While operating on gasoline with an octane number of 87, hearing a light knocking sound from the engine is not a cause for concern. However, if the engine is heard making a heavy knocking sound, see your dealer immediately. Use of gasoline with an octane number lower than 87 can cause engine failure and may void or not be covered by the New Vehicle Limited Warranty.

Poor quality gasoline can cause problems such as hard starting, stalling, and hesitations. If you experience these symptoms, try another brand of gasoline before considering service for the vehicle.

2.4L Engine

800dfab6

All available gasoline engines are designed to meet all emissions regulations and provide excellent fuel economy and performance when using high quality unleaded "regular" gasoline having a octane rating of 87 using the (R+M)/2 method. The use of premium gasoline is not recommended, as it will not provide any benefit over regular gasoline in these engines.

While operating on gasoline with an octane number of 87, hearing a light knocking sound from the engine is not a cause for concern. However, if the engine is heard making a heavy knocking sound, see your dealer immediately. Use of gasoline with an octane number lower than 87 can cause engine failure and may void or not be covered by the New Vehicle Limited Warranty.

Poor quality gasoline can cause problems such as hard starting, stalling, and hesitations. If you experience these symptoms, try another brand of gasoline before considering service for the vehicle.

Reformulated Gasoline

Many areas of the country require the use of cleaner burning gasoline referred to as "Reformulated Gasoline". Reformulated gasoline contains oxygenates and are specifically blended to reduce vehicle emissions and improve air quality.

The use of reformulated gasoline is recommended. Properly blended reformulated gasoline will provide improved performance and durability of engine and fuel system components.

Gasoline/Oxygenate Blends

Some fuel suppliers blend unleaded gasoline with oxygenates such as ethanol.

CAUTION!

DO NOT use gasoline containing methanol or gasoline containing more than 15% ethanol (E-15). Use of these blends may result in starting and drivability problems, damage critical fuel system components, cause emissions to exceed the applicable standard, and/or cause the "Malfunction Indicator Light" to illuminate. Please observe pump labels as they should clearly communicate if a fuel contains greater than 15% ethanol (E-15).

Problems that result from using gasoline containing more than 15% ethanol (E-15) or gasoline containing methanol are not the responsibility of the manufacturer and may void or not be covered under New Vehicle Limited Warranty.

E-85 Usage In Non-Flex Fuel Vehicles

Non-Flex Fuel Vehicles (FFV) are compatible with gasoline containing up to 15% ethanol (E-15). Gasoline with higher ethanol content may void the New Vehicle Limited Warranty.

If a Non-FFV vehicle is inadvertently fueled with E-85 fuel, the engine will have some or all of these symptoms:

- Operate in a lean mode.
- OBD II "Malfunction Indicator Light" on.
- Poor engine performance.
- Poor cold start and cold drivability.
- Increased risk for fuel system component corrosion.

MMT In Gasoline

Methylcyclopentadienyl Manganese Tricarbonyl (MMT) is a manganese-containing metallic additive that is blended into some gasoline to increase octane. Gasoline blended with MMT provides no performance advantage beyond gasoline of the same octane number without MMT. Gasoline blended with MMT reduces spark plug life and reduces emissions system performance in some vehicles. The manufacturer recommends that gasoline without MMT be used in your vehicle. The MMT content of gasoline may not be indicated on the gasoline pump, therefore, you should ask your gasoline retailer whether the gasoline contains MMT. MMT is prohibited in Federal and California reformulated gasoline.

Materials Added To Fuel

Besides using unleaded gasoline with the proper octane rating, gasolines that contain detergents, corrosion and stability additives are recommended. Using gasolines that have these additives will help improve fuel economy, reduce emissions, and maintain vehicle performance. Designated TOP TIER Detergent Gasoline contains a higher level of detergents to further aide in minimizing engine and fuel system deposits. When available the usage of Top Tier Detergent gasoline is recommended. Visit www.toptiergas.com for a list of TOP TIER Detergent Gasoline Retailers.

Indiscriminate use of fuel system cleaning agents should be avoided. Many of these materials intended for gum and varnish removal may contain active solvents or similar ingredients. These can harm fuel system gasket and diaphragm materials.

Fuel System Cautions

CAUTION!

Follow these guidelines to maintain your vehicle's performance:

- **The use of leaded gasoline is prohibited by Federal law. Using leaded gasoline can impair engine performance and damage the emissions control system.**
- **An out-of-tune engine or certain fuel or ignition malfunctions can cause the catalytic converter to overheat. If you notice a pungent burning odor or some light smoke, your engine may be out of tune or malfunctioning and may require immediate service. Contact your authorized dealer for service assistance.**

(Continued)

CAUTION! *(Continued)*

- **The use of fuel additives, which are now being sold as octane enhancers, is not recommended. Most of these products contain high concentrations of methanol. Fuel system damage or vehicle performance problems resulting from the use of such fuels or additives is not the responsibility of the manufacturer and may void or not be covered under the New Vehicle Limited Warranty.**

NOTE: Intentional tampering with the emissions control system can result in civil penalties being assessed against you.

Carbon Monoxide Warnings

WARNING!

Carbon monoxide (CO) in exhaust gases is deadly. Follow the precautions below to prevent carbon monoxide poisoning:

- **Do not inhale exhaust gases. They contain carbon monoxide, a colorless and odorless gas, which can kill. Never run the engine in a closed area, such as a garage, and never sit in a parked vehicle with the engine running for an extended period. If the vehicle is stopped in an open area with the engine running for more than a short period, adjust the ventilation system to force fresh, outside air into the vehicle.**

(Continued)

WARNING! ***(Continued)***

- **Guard against carbon monoxide with proper maintenance. Have the exhaust system inspected every time the vehicle is raised. Have any abnormal conditions repaired promptly. Until repaired, drive with all side windows fully open.**

ADDING FUEL

The Capless Fuel System uses a flapper placed at the filler pipe of the fuel tank; it opens and closes automatically upon insertion/extraction of the fuel nozzle.

The Capless Fuel System is designed so that it prevents the filling of an incorrect type of fuel.

Opening The Door

For filling proceed as follows:

- Open the door, by pushing and releasing on the indentation point indicated by the arrow.

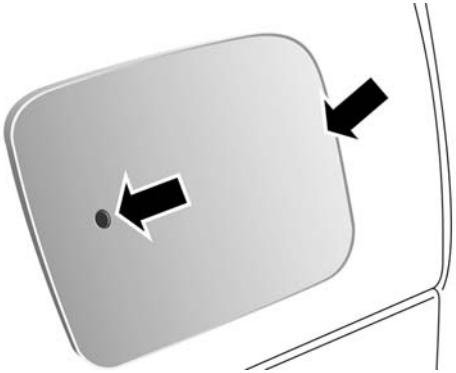

Fuel Filler Door

- Insert the fuel nozzle in the filler pipe and proceed with filling the fuel tank.

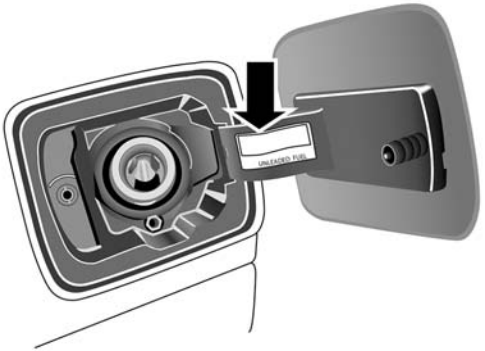

Filling Procedure

- Before removing the nozzle, wait at least 10 seconds to allow the fuel to flow inside of the tank.
- Pull the nozzle from the filler pipe and then close the door.

Emergency Refueling Procedure

If the vehicle is out of fuel proceed as follows:

- Open the liftgate and remove the emergency fuel fill funnel located in the cargo area.

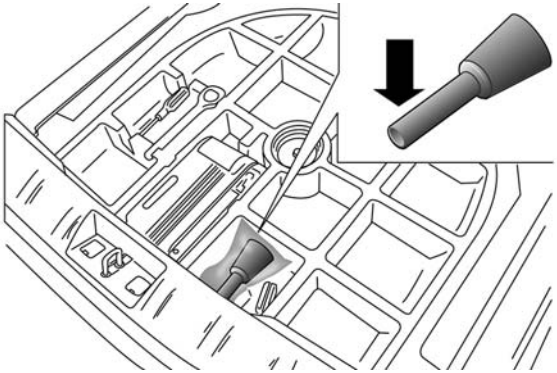

Emergency Fuel Fill Funnel

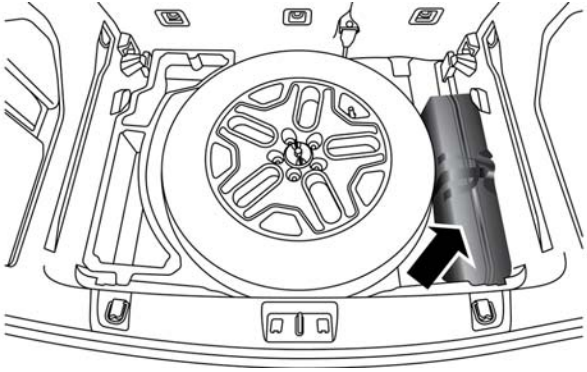

Emergency Fuel Fill Funnel – If Equipped with Full Size Spare Tire

- Open the fuel door.
- Insert the emergency fuel fill funnel in the filler pipe and proceed to fill the fuel tank.

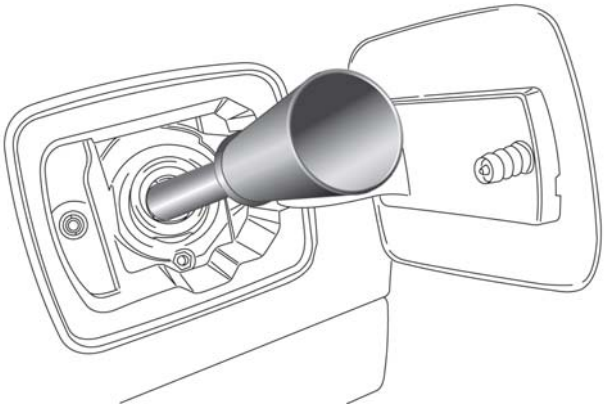

Fueling with Emergency Fuel Fill Funnel

- Remove the emergency fuel fill funnel, and close the door.
- Store the emergency fuel fill funnel in the cargo area.

WARNING!

- **Do not to affix objects/plugs to the end of the filler neck other than is provided on the car.**
- **The use of objects/plugs do not comply with the vehicle and may cause pressure increases inside the tank, creating dangerous conditions.**
- **Do not approach the neck of the tank with open flames or lit cigarettes its an extreme fire hazard. Also, avoid close contact with the filler pipe with your face, do not inhale harmful vapors.**
- **Do not use your mobile phone in the vicinity of the pump fuel nozzle, it can be a possible risk of fire.**

VEHICLE LOADING

Certification Label

As required by National Highway Traffic Safety Administration regulations, your vehicle has a certification label affixed to the driver's side door or pillar.

This label contains the month and year of manufacture, Gross Vehicle Weight Rating (GVWR), Gross Axle Weight Rating (GAWR) front and rear, and Vehicle Identification Number (VIN). A Month-Day-Hour (MDH) number is included on this label and indicates the Month, Day and Hour of manufacture. The bar code that appears on the bottom of the label is your VIN.

Gross Vehicle Weight Rating (GVWR)

The GVWR is the total permissible weight of your vehicle including driver, passengers, vehicle, options and cargo. The label also specifies maximum capacities of front and rear axle systems (GAWR). Total load must be limited so GVWR and front and rear GAWR are not exceeded.

Payload

The payload of a vehicle is defined as the allowable load weight a truck can carry, including the weight of the driver, all passengers, options and cargo.

Gross Axle Weight Rating (GAWR)

The GAWR is the maximum permissible load on the front and rear axles. The load must be distributed in the cargo area so that the GAWR of each axle is not exceeded.

Each axle GAWR is determined by the components in the system with the lowest load carrying capacity (axle, springs, tires or wheels). Heavier axles or suspension components sometimes specified by purchasers for increased durability does not necessarily increase the vehicle's GVWR.

Tire Size

The tire size on the Vehicle Certification Label represents the actual tire size on your vehicle. Replacement tires must be equal to the load capacity of this tire size.

Rim Size

This is the rim size that is appropriate for the tire size listed.

Inflation Pressure

This is the cold tire inflation pressure for your vehicle for all loading conditions up to full GAWR.

Curb Weight

The curb weight of a vehicle is defined as the total weight of the vehicle with all fluids, including vehicle fuel, at full capacity conditions, and with no occupants or cargo loaded into the vehicle. The front and rear curb weight values are determined by weighing your vehicle on a commercial scale before any occupants or cargo are added.

Loading

The actual total weight and the weight of the front and rear of your vehicle at the ground can best be determined by weighing it when it is loaded and ready for operation.

The entire vehicle should first be weighed on a commercial scale to insure that the GVWR has not been exceeded. The weight on the front and rear of the vehicle should then be determined separately to be sure that the load is properly distributed over the front and rear axle. Weighing the vehicle may show that the GAWR of either the front or rear axles has been exceeded but the total load is within the specified GVWR. If so, weight must be shifted from front to rear or rear to front as appropriate until the specified weight limitations are met. Store the heavier

items down low and be sure that the weight is distributed equally. Stow all loose items securely before driving.

Improper weight distributions can have an adverse effect on the way your vehicle steers and handles and the way the brakes operate.

CAUTION!

Do not load your vehicle any heavier than the GVWR or the maximum front and rear GAWR. If you do, parts on your vehicle can break, or it can change the way your vehicle handles. This could cause you to lose control. Also overloading can shorten the life of your vehicle.

ON-ROAD DRIVING TIPS

Utility vehicles have higher ground clearance and a narrower track to make them capable of performing in a wide variety of off-road applications. Specific design characteristics give them a higher center of gravity than ordinary cars.

An advantage of the higher ground clearance is a better view of the road, allowing you to anticipate problems. They are not designed for cornering at the same speeds as conventional two-wheel drive vehicles any more than low-slung sports cars are designed to perform satisfactorily in off-road conditions. If at all possible, avoid sharp turns or abrupt maneuvers. As with other vehicles of this type, failure to operate this vehicle correctly may result in loss of control or vehicle rollover.

OFF-ROAD DRIVING TIPS

When To Use 4WD LOW Range

When off-road driving, shift to 4WD LOW for additional traction and control on slippery or difficult terrain, ascending or descending steep hills, and to increase low-speed pulling power (refer to "All Wheel Drive and Four-Wheel Drive Operation" in this section for further details). This range should be limited to extreme situations such as deep snow, mud, or sand where additional low speed pulling power is needed. Vehicle speeds in excess of 25 mph (40 km/h) should be avoided when in 4WD LOW range.

Driving Through Water

Although your vehicle is capable of driving through water, there are a number of precautions that must be considered before entering the water:

CAUTION!

When driving through water, do not exceed 5 mph (8 km/h). Always check water depth before entering as a precaution, and check all fluids afterward. Driving through water may cause damage that may not be covered by the New Vehicle Limited Warranty.

Driving through water more than a few inches/centimeters deep will require extra caution to ensure safety and prevent damage to your vehicle. If you must drive through water, try to determine the depth and the bottom condition (and location of any obstacles) prior to entering. Proceed with caution and maintain a steady controlled speed less than 5 mph (8 km/h) in deep water to minimize wave effects.

Flowing Water

If the water is swift flowing and rising (as in storm run-off) avoid crossing until the water level recedes and/or the flow rate is reduced. If you must cross flowing-water, avoid depths in excess of 9 inches (22 cm). The flowing water can erode the streambed causing your vehicle to sink into deeper water. Determine exit point(s) that are downstream of your entry point to allow for drifting.

Standing Water

Avoid driving in standing water deeper than 19 inches (48 cm), and reduce speed appropriately to minimize wave effects. Maximum speed in 19 inches (48 cm) of water is less than 5 mph (8 km/h).

Maintenance

After driving through deep water, inspect your vehicle fluids and lubricants (engine, transmission, Power Transfer Unit and Rear Drive Module) to assure they have not been contaminated. Contaminated fluids and lubricants (milky, foamy in appearance) should be flushed/changed as soon as possible to prevent component damage.

Driving In Snow, Mud And Sand

In heavy snow, when pulling a load, or for additional control at slower speeds, shift the transmission to a low gear and shift the 4WD system to the appropriate terrain mode, using 4WD LOW if necessary. Refer to “Four-Wheel Drive Operation” in “Starting And Operating” for further information. Do not shift to a lower gear than necessary to maintain headway. Over-revving the engine can spin the wheels and traction will be lost.

Avoid abrupt downshifts on icy or slippery roads because engine braking may cause skidding and loss of control.

Hill Climbing

NOTE: Before attempting to climb a hill, determine the conditions at the crest and/or on the other side.

Before climbing a steep hill, shift the transmission to a lower gear and shift the 4WD System to 4WD LOW. Use first gear and 4WD LOW for very steep hills.

If you stall or begin to lose headway while climbing a steep hill, allow your vehicle to come to a stop and immediately apply the brakes. Restart the engine and shift to REVERSE. Back slowly down the hill allowing the compression braking of the engine to help regulate your speed. If the brakes are required to control vehicle speed, apply them lightly and avoid locking or skidding the tires.

WARNING!

If the engine stalls or you lose headway or cannot make it to the top of a steep hill or grade, never attempt to turn around. To do so may result in tipping and rolling the vehicle. Always back straight down a hill in REVERSE gear carefully. Never back down a hill in NEUTRAL using only the brake.

NOTE: Remember, never drive diagonally across a hill - drive straight up or down.

If the wheels start to slip as you approach the crest of a hill, ease off the accelerator and maintain headway by turning the front wheels slowly left and right. This may provide a fresh “bite” into the surface and will usually provide traction to complete the climb.

Traction Downhill

Shift the transmission into a low gear and the 4WD System to 4WD LOW range or Select Hill Descent Control if equipped (refer to "Electronic Brake Control System" in this section for further information). Let the vehicle go slowly down the hill with all four wheels turning against engine compression drag. This will permit you to control the vehicle speed and direction.

When descending mountains or hills, repeated braking can cause brake fade with loss of braking control. Avoid repeated heavy braking by downshifting the transmission whenever possible.

After Driving Off-Road

Off-road operation puts more stress on your vehicle than does most on-road driving. After going off-road, it is always a good idea to check for damage. That way you can get any problems taken care of right away and have your vehicle ready when you need it.

- Completely inspect the underbody of your vehicle. Check tires, body structure, steering, suspension, and exhaust system for damage.
- Inspect the radiator for mud and debris and clean as required.
- Check threaded fasteners for looseness, particularly on the chassis, drivetrain components, steering, and suspension. Retighten them, if required, and torque to the values specified in the Service Manual.
- Check for accumulations of plants or brush. These things could be a fire hazard. They might hide damage to fuel lines, brake hoses, axle pinion seals, and propeller shafts.
- After extended operation in mud, sand, water, or similar dirty conditions, have the radiator, fan, brake rotors, wheels, brake linings, and axle yokes inspected and cleaned as soon as possible.

WARNING!

Abrasive material in any part of the brakes may cause excessive wear or unpredictable braking. You might not have full braking power when you need it to prevent a collision. If you have been operating your vehicle in dirty conditions, get your brakes checked and cleaned as necessary.

- If you experience unusual vibration after driving in mud, slush or similar conditions, check the wheels for impacted material. Impacted material can cause a wheel imbalance and freeing the wheels of it will correct the situation.

POWER STEERING

The electric power steering system will give you good vehicle response and increased ease of maneuverability in tight spaces. The system will vary its assist to provide light efforts while parking and good feel while driving. If the electric steering system experiences a fault that reduces assist or prevents the vehicle from providing assist, you will still have the ability to steer the vehicle manually.

WARNING!

Continued operation with reduced assist could pose a safety risk to yourself and others. Service should be obtained as soon as possible.

If the "SERVICE POWER STEERING" OR "POWER STEERING ASSIST OFF - SERVICE SYSTEM" message and a steering wheel icon are displayed on the EVIC/DID screen, it indicates that the vehicle needs to be taken to the dealer for service. It is likely the vehicle has lost power steering assistance. Refer to "Electronic Vehicle Information (EVIC) or "Driver Information Display (DID)" in "Getting To Know Your Instrument Cluster" for further information.

NOTE:

- Even if the power steering assistance is no longer operational, it is still possible to steer the vehicle. Under these conditions there will be a substantial increase in steering effort, especially at low speeds and during parking maneuvers.
- If the condition persists, see your authorized dealer for service.

TRAILER TOWING

In this section you will find safety tips and information on limits to the type of towing you can reasonably do with your vehicle. Before towing a trailer, carefully review this information to tow your load as efficiently and safely as possible.

To maintain the New Vehicle Limited Warranty coverage, follow the requirements and recommendations in this manual concerning vehicles used for trailer towing.

Common Towing Definitions

The following trailer towing related definitions will assist you in understanding the following information:

Gross Vehicle Weight Rating (GVWR)

The GVWR is the total allowable weight of your vehicle. This includes driver, passengers, cargo and tongue weight. The total load must be limited so that you do not exceed the GVWR. Refer to "Vehicle Loading/Vehicle Certification Label" in "Starting And Operating" for further information.

Gross Trailer Weight (GTW)

The GTW is the weight of the trailer plus the weight of all cargo, consumables and equipment (permanent or temporary) loaded in or on the trailer in its "loaded and ready for operation" condition.

The recommended way to measure GTW is to put your fully loaded trailer on a vehicle scale. The entire weight of the trailer must be supported by the scale.

Gross Combination Weight Rating (GCWR)

The GCWR is the total permissible weight of your vehicle and trailer when weighed in combination.

Gross Axle Weight Rating (GAWR)

The GAWR is the maximum capacity of the front and rear axles. Distribute the load over the front and rear axles evenly. Make sure that you do not exceed either front or rear GAWR. Refer to "Vehicle Loading/Vehicle Certification Label" in "Starting And Operating" for further information.

WARNING!

It is important that you do not exceed the maximum front or rear GAWR. A dangerous driving condition can result if either rating is exceeded. You could lose control of the vehicle and have a collision.

Tongue Weight (TW)

The tongue weight is the downward force exerted on the hitch ball by the trailer. The recommended tongue weight is 10% to 15% of the vehicle's GTW for a conventional hitch. You must consider this as part of the load on your vehicle.

Frontal Area

The frontal area is the maximum height multiplied by the maximum width of the front of a trailer.

Trailer Sway Control — Mechanical

The trailer sway control is a telescoping link that can be installed between the hitch receiver and the trailer tongue that typically provides adjustable friction associated with the telescoping motion to dampen any unwanted trailer swaying motions while traveling.

Weight-Carrying Hitch

A weight-carrying hitch supports the trailer tongue weight, just as if it were luggage located at a hitch ball or some other connecting point of the vehicle. These kinds of hitches are the most popular on the market today and they are commonly used to tow small and medium sized trailers.

Weight-Distributing Hitch

A weight-distributing system works by applying leverage through spring (load) bars. They are typically used for heavier loads to distribute trailer tongue weight to the tow vehicle's front axle and the trailer axle(s). When used in accordance with the manufacturer's directions, it provides for a more level ride, offering more consistent steering and brake control thereby enhancing towing safety. The addition of a friction/hydraulic sway control also dampens sway caused by traffic and crosswinds and contributes positively to tow vehicle and trailer stability. Trailer sway control and a weight distributing (load equalizing) hitch are recommended for heavier Tongue Weights (TW) and may be required depending on vehicle and trailer configuration/loading to comply with Gross Axle Weight Rating (GAWR) requirements.

WARNING!

- **An improperly adjusted Weight Distributing Hitch system may reduce handling, stability, braking performance, and could result in a collision.**

(Continued)

WARNING! *(Continued)*

- **Weight Distributing Systems may not be compatible with Surge Brake Couplers. Consult with your hitch and trailer manufacturer or a reputable Recreational Vehicle dealer for additional information.**

Trailer Hitch Classification

The following chart provides the industry standard for the maximum trailer weight a given trailer hitch class can tow and should be used to assist you in selecting the correct trailer hitch for your intended towing condition.

Trailer Hitch Classification Definitions	
Class	**Max. Trailer Hitch Industry Standards**
Class I - Light Duty	2,000 lbs (907 kg)
Class II - Medium Duty	3,500 lbs (1 587 kg)
Class III - Heavy Duty	5,000 lbs (2 268 kg)
Class IV - Extra Heavy Duty	10,000 lbs (4 540 kg)
Refer to the "Trailer Towing Weights (Maximum Trailer Weight Ratings)" chart for the Maximum Gross Trailer Weight (GTW) towable for your given drivetrain.	
All trailer hitches should be professionally installed on your vehicle.	

Trailer Towing Weights (Maximum Trailer Weight Ratings)

The following chart provides the maximum trailer weight ratings towable for your given drivetrain.

1.4L Turbo Engine

Trailer towing is not recommended.

Engine	Max. GTW (Gross Trailer Wt.)	Max. Tongue Wt. (See Note)
2.4L	2,000 lbs (900 kg)	200 lbs (90 kg)
Refer to local laws for maximum trailer towing speeds.		
NOTE: The trailer tongue weight must be considered as part of the combined weight of occupants and cargo and should never exceed the weight referenced on the Tire and Loading Information placard. Refer to "Tire Safety Information" in "Starting And Operating" for further information.		

Trailer And Tongue Weight

Always load a trailer with 60% to 65% of the weight in the front of the trailer. This places 10% to 15% of the Gross Trailer Weight (GTW) on the tow hitch of your vehicle. Loads balanced over the wheels or heavier in the rear can cause the trailer to sway **severely** side to side which will cause loss of control of the vehicle and trailer. Failure to load trailers heavier in front is the cause of many trailer collisions.

Never exceed the maximum tongue weight stamped on your bumper or trailer hitch.

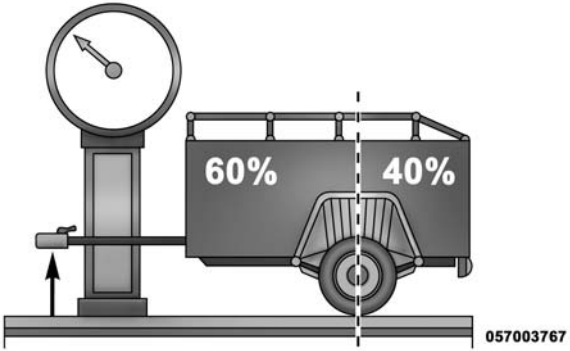

Consider the following items when computing the weight on the rear axle of the vehicle:

- The tongue weight of the trailer.
- The weight of any other type of cargo or equipment put in or on your vehicle.
- The weight of the driver and all passengers.

NOTE: Remember that everything put into or on the trailer adds to the load on your vehicle. Also, additional factory-installed options or dealer-installed options must be considered as part of the total load on your vehicle. Refer to the "Tire And Loading Information" placard for the maximum combined weight of occupants and cargo for your vehicle.

Towing Requirements

To promote proper break-in of your new vehicle drive-train components, the following guidelines are recommended:

WARNING!

Improper towing can lead to a collision. Follow these guidelines to make your trailer towing as safe as possible:

(Continued)

WARNING! ***(Continued)***

- **Make certain that the load is secured in the trailer and that it will not shift during travel. When trailering cargo that is not fully secured, dynamic load shifts can occur that may be difficult for the driver to control. You could lose control of your vehicle and have a collision.**
- **When hauling cargo, or towing a trailer, do not overload your vehicle or trailer. Overloading can cause a loss of control, poor performance, or damage to brakes, axle, engine, transmission, steering, suspension, chassis structure, or tires.**
- **Safety chains must always be used between your vehicle and trailer. Always connect the chains to the frame or hook retainers of the vehicle hitch. Cross the chains under the trailer tongue and allow enough slack for turning corners.**

(Continued)

WARNING! *(Continued)*

- **Vehicles with trailers should not be parked on a grade. When parking, apply the parking brake on the tow vehicle. Put the tow vehicle transmission in PARK. Always, block or "chock" the trailer wheels.**
- **GCWR must not be exceeded.**
- **Total weight must be distributed between the tow vehicle and the trailer such that the following four ratings are not exceeded:**

  1. GVWR

  2. GTW

  3. GAWR

  4. Tongue weight rating for the trailer hitch utilized.

CAUTION!

- **Do not tow a trailer at all during the first 500 miles (805 km) the new vehicle is driven. The engine, axle or other parts could be damaged.**
- **Then, during the first 500 miles (805 km) that a trailer is towed, do not drive over 50 mph (80 km/h) and do not make starts at full throttle. This helps the engine and other parts of the vehicle wear in at the heavier loads.**

Towing Requirements — Tires

- Do not attempt to tow a trailer while using a compact spare tire.
- Proper tire inflation pressures are essential to the safe and satisfactory operation of your vehicle. Refer to "Tires – General Information" in "Starting And Operating" for proper tire inflation procedures.

- Check the trailer tires for proper tire inflation pressures before trailer usage.
- Check for signs of tire wear or visible tire damage before towing a trailer. Refer to "Tires – General Information" in "Starting And Operating" for the proper inspection procedure.
- When replacing tires, refer to "Tires – General Information" in "Starting And Operating" for the proper tire replacement procedures. Replacing tires with a higher load carrying capacity will not increase the vehicle's GVWR and GAWR limits.

Towing Requirements — Trailer Brakes

- Do **not** interconnect the hydraulic brake system or vacuum system of your vehicle with that of the trailer. This could cause inadequate braking and possible personal injury.
- An electronically actuated trailer brake controller is required when towing a trailer with electronically actuated brakes. When towing a trailer equipped with a hydraulic surge actuated brake system, an electronic brake controller is not required.
- Trailer brakes are recommended for trailers over 1,000 lbs (454 kg) and required for trailers in excess of 2,000 lbs (907 kg).

WARNING!

- **Do not connect trailer brakes to your vehicle's hydraulic brake lines. It can overload your brake system and cause it to fail. You might not have brakes when you need them and could have a collision.**

(Continued)

WARNING! *(Continued)*

- **Towing any trailer will increase your stopping distance. When towing you should allow for additional space between your vehicle and the vehicle in front of you. Failure to do so could result in a collision.**

CAUTION!

If the trailer weighs more than 1,000 lbs (454 kg) loaded, it should have its own brakes and they should be of adequate capacity. Failure to do this could lead to accelerated brake lining wear, higher brake pedal effort, and longer stopping distances.

Towing Requirements — Trailer Lights And Wiring

Whenever you pull a trailer, regardless of the trailer size, stoplights and turn signals on the trailer are required for motoring safety.

The Trailer Tow Package may include a four- and seven-pin wiring harness. Use a factory approved trailer harness and connector.

NOTE: Do not cut or splice wiring into the vehicles wiring harness.

The electrical connections are all complete to the vehicle but you must mate the harness to a trailer connector. Refer to the following illustrations.

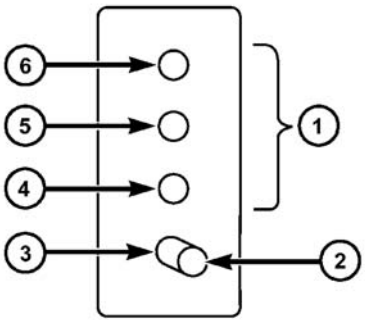

057003766

Four-Pin Connector

1 — Female Pins
2 — Male Pin
3 — Ground
4 — Park
5 — Left Stop/Turn
6 — Right Stop/Turn

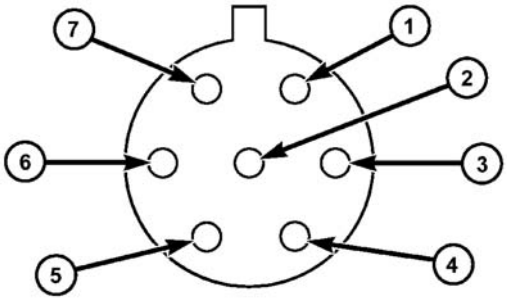

057003765

Seven-Pin Connector

1 — Battery
2 — Backup Lamps
3 — Right Stop/Turn
4 — Electric Brakes
5 — Ground
6 — Left Stop/Turn
7 — Running Lamps

Towing Tips

Before setting out on a trip, practice turning, stopping, and backing the trailer in an area located away from heavy traffic.

Automatic Transmission — If Equipped

The DRIVE range can be selected when towing. The transmission controls include a drive strategy to avoid frequent shifting when towing. However, if frequent shifting does occur while in DRIVE, you can use the AutoStick shift control to manually select a lower gear.

NOTE: Using a lower gear while operating the vehicle under heavy loading conditions will improve performance and extend transmission life by reducing excessive shifting and heat build up. This action will also provide better engine braking.

AutoStick

- When using the AutoStick shift control, select the highest gear that allows for adequate performance and avoids frequent downshifts. For example, choose “5” if the desired speed can be maintained. Choose “4” or “3” if needed to maintain the desired speed.
- To prevent excess heat generation, avoid continuous driving at high RPM. Reduce vehicle speed as necessary to avoid extended driving at high RPM. Return to a higher gear or vehicle speed when grade and road conditions allow.

Electronic Speed Control — If Equipped

- Do not use in hilly terrain or with heavy loads.
- When using the speed control, if you experience speed drops greater than 10 mph (16 km/h), disengage until you can get back to cruising speed.
- Use speed control in flat terrain and with light loads to maximize fuel efficiency.

Cooling System

To reduce potential for engine and transmission overheating, take the following actions:

City Driving

When stopped for short periods of time, shift the transmission into NEUTRAL and increase engine idle speed.

Highway Driving

Reduce speed.

Air Conditioning

Turn off temporarily.

RECREATIONAL TOWING

Towing This Vehicle Behind Another Vehicle

		FRONT WHEEL DRIVE (FWD)		FOUR-WHEEL DRIVE (4WD)
TOWING CONDITION	WHEELS OFF THE GROUND	AUTOMATIC TRANSMISSION	MANUAL TRANSMISSION	MANUAL/ AUTOMATIC TRANSMISSION
Flat Tow	NONE	NOT ALLOWED	NOT ALLOWED	NOT ALLOWED
Dolly Tow	REAR	NOT ALLOWED	NOT ALLOWED	NOT ALLOWED
	FRONT	OK	OK	NOT ALLOWED
On Trailer	ALL	BEST METHOD	BEST METHOD	OK

NOTE:

- When recreational towing your vehicle, always follow applicable state and provincial laws. Contact state and provincial Highway Safety offices for additional details.
- You must ensure that the Auto Park Brake feature is disabled before towing this vehicle, to avoid inadvertent Electric Park Brake engagement. The Auto Park Brake feature is enabled or disabled via the customer programmable features in the Uconnect Settings.

Recreational Towing

Models With Front-Wheel Drive (FWD)

Recreational towing is allowed ONLY if the front wheels are OFF the ground. This may be accomplished using a tow dolly (front wheels off the ground) or vehicle trailer (all four wheels off the ground). If using a tow dolly, follow this procedure:

- Properly secure the dolly to the tow vehicle, following the dolly manufacturer's instructions.
- Drive the front wheels onto the tow dolly.
- Apply the Electronic Parking Brake (EPB). Place the transmission in PARK. Turn the engine OFF.
- Properly secure the front wheels to the dolly, following the dolly manufacturer's instructions.
- Turn the ignition to the MAR/RUN position, but do not start the engine.
- Press and hold the brake pedal.
- Release the Electric Park Brake (EPB).
- Turn the ignition OFF, remove the key, and release the brake pedal.

CAUTION!

- **DO NOT flat tow this vehicle. Damage to the drivetrain will result. If this vehicle requires towing, make sure the drive wheels are OFF the ground.**
- **Ensure that the Electric Park Brake is released, and remains released, while being towed.**
- **Towing this vehicle in violation of the above requirements can cause severe transmission damage. Damage from improper towing is not covered under the New Vehicle Limited Warranty.**

Models With Four-Wheel Drive (4WD)

Recreational towing (with all four wheels on the ground, or using a towing dolly) is NOT ALLOWED. This vehicle may be towed on a flatbed or vehicle trailer provided all four wheels are OFF the ground.

CAUTION!

Towing this vehicle with ANY of its wheels on the ground can cause severe transmission and/or power transfer unit damage. Damage from improper towing is not covered under the New Vehicle Limited Warranty.

IN CASE OF EMERGENCY

CONTENTS

- HAZARD WARNING FLASHERS 435
- ASSIST AND 9–1–1 — IF EQUIPPED 435
- BULB REPLACEMENT 442
  - General Information. 442
  - Replacement Bulbs. 443
  - Replacing Exterior Bulbs 445
  - Replacing Interior Bulbs 463
- FUSES 469
  - General Information. 470
  - Access To The Fuses 471
  - Engine Compartment Fuses/Distribution Unit 472
  - Body Computer Fuse Center. 476
  - Rear Cargo Fuse/Relay Distribution Unit. 480
- JACKING AND TIRE CHANGING 483
  - Jack Location/Spare Tire Stowage 484
  - Preparations For Jacking 486
  - Jacking Instructions 486
  - Road Tire Installation. 494

■ TIRE SERVICE KIT STORAGE 495
□ Tire Service Kit — If Equipped 495
■ JUMP STARTING 499
□ Preparations For Jump Start 500
□ Jump Starting Procedure 502
■ Enhanced Accident Response System 504
□ System Reset Procedure 504
■ REFUELING IN EMERGENCY 506
■ IF YOUR ENGINE OVERHEATS 506
■ SHIFT LEVER OVERRIDE 507
■ IGNITION KEY REMOVAL OVERRIDE 509
■ FREEING A STUCK VEHICLE 512
■ TOWING A DISABLED VEHICLE 514
□ Front Wheel Drive (FWD). 515
□ Four-Wheel Drive (4WD) 516
■ EMERGENCY TOW HOOKS —
IF EQUIPPED 516

HAZARD WARNING FLASHERS

The Hazard Warning flasher switch is located on the switch bank below the radio.

Push the switch to turn on the Hazard Warning Flasher. When the switch is activated, all directional turn signals will flash on and off to warn oncoming traffic of an emergency. Push the switch a second time to turn off the Hazard Warning flashers.

This is an emergency warning system and it should not be used when the vehicle is in motion. Use it when your vehicle is disabled and it is creating a safety hazard for other motorists.

When you must leave the vehicle to seek assistance, the Hazard Warning flashers will continue to operate even though the ignition is placed in the STOP/OFF position.

NOTE: With extended use the Hazard Warning flashers may wear down your battery.

ASSIST AND 9–1–1 — IF EQUIPPED

If equipped, the overhead console contains an ASSIST and a 9-1-1 button.

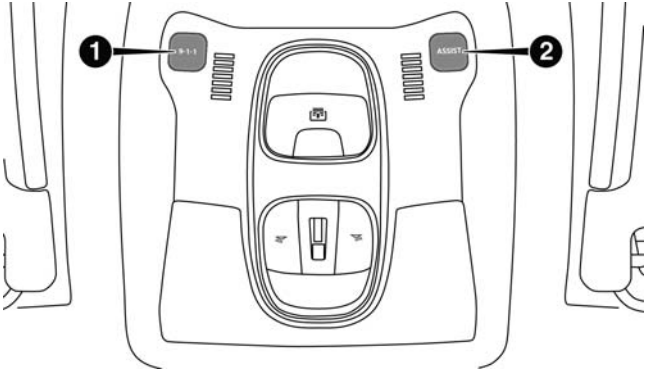

Driver Assistance Call Buttons

1 — 9–1–1 Button
2 — Assist Button

WARNING!

ALWAYS obey traffic laws and pay attention to the road. Some Uconnect Access services, including 9-1-1 and Assist, will NOT work without an operable 1X (voice/data) or 3G (data) network connection.

NOTE:

- Your vehicle may be transmitting data as authorized by the subscriber.
- The ASSIST and 9–1–1 features operate through the Uconnect Access service. These buttons will only operate as long as your Uconnect Access service is active. Refer to your "Uconnect Radio supplement" for further information.

ASSIST Call

The ASSIST Button is used to automatically connect you to any one of the following support centers:

- Roadside Assistance – If you get a flat tire, or need a tow, just push the Assist button and you'll be connected to someone who can help. Roadside Assistance will know what vehicle you're driving and its location. Additional fees may apply for Roadside Assistance.
- Uconnect Access Customer Care – In-vehicle support for Uconnect Access and Uconnect Access Via Mobile features.
- Vehicle Customer Care – Total support for all other vehicle issues.

9-1-1 Call

1. Push the 9-1-1 Call button on the overhead console.

NOTE: In case the 9-1-1 Call button is pushed in error, there will be a 10 second delay before the 9-1-1 Call system initiates a call to a 9-1-1 operator. To cancel the 9-1-1 Call connection, push the 9-1-1 Call button on the overhead console or press the cancellation button on the Device Screen. Termination of the 9-1-1 Call will turn the green LED light on the overhead console off.

2. The LED light located on the Assist and 9-1-1 buttons in the overhead console will turn green once you push these buttons and will remain on until the call is ended.
3. Once a connection between the vehicle and a 9-1-1 operator is made, the 9-1-1 Call system may transmit the following important vehicle information to a 9-1-1 operator:
   - Indication that the occupant placed a 9-1-1 Call.
   - The vehicle brand.
   - The last known GPS coordinates of the vehicle.
4. You should be able to speak with the 9-1-1 operator through the vehicle audio system to determine if additional help is needed.

WARNING!

ALWAYS obey traffic laws and pay attention to the road. Some Uconnect Access services, including 9-1-1 and Assist, will NOT work without an operable 1X (voice/data) or 3G (data) network connection.

NOTE:

- Your vehicle may be transmitting data as authorized by the subscriber.
- Once a connection is made between the vehicle's 9-1-1 Call system and the 9-1-1 operator, the 9-1-1 operator may be able to open a voice connection with the vehicle to determine if additional help is needed. Once the 9-1-1 operator opens a voice connection with the vehicle's 9-1-1 Call system, the operator should be able to speak with you or other vehicle occupants and hear sounds occurring in the vehicle. The vehicle's 9-1-1 Call system will attempt to remain connected with the 9-1-1 operator until the 9-1-1 operator terminates the connection.

5. The 9-1-1 operator may attempt to contact appropriate emergency responders and provide them with important vehicle information and GPS coordinates.

WARNING!

- **If anyone in the vehicle could be in danger (e.g., fire or smoke is visible, dangerous road conditions or location), do not wait for voice contact from a 9-1-1 operator. All occupants should exit the vehicle immediately and move to a safe location.**
- **The 9-1-1 Call system is embedded into the vehicle's electrical system. Do not add aftermarket electrical equipment to the vehicle's electrical system. This may prevent your vehicle from sending a signal to initiate an emergency call. To avoid interference that can cause the 9-1-1 Call system to fail, never add aftermarket equipment (e.g., two-way mobile radio, CB radio, data recorder, etc.) to your vehicle's electrical system or modify the antennas on your vehicle. IF YOUR VEHICLE LOSES BATTERY POWER FOR ANY REASON (INCLUDING**

(Continued)

WARNING! ***(Continued)***

DURING OR AFTER AN ACCIDENT), THE UCONNECT FEATURES, APPS AND SERVICES, AMONG OTHERS, WILL NOT OPERATE.

- **Modifications to any part of the 9-1-1 Call system could cause the air bag system to fail when you need it. You could be injured if the air bag system is not there to help protect you.**

9-1-1 Call System Limitations

Vehicles sold in Canada and Mexico **DO NOT** have 9-1-1 Call system capabilities.

9-1-1 or other emergency line operators in Canada and Mexico may not answer or respond to 9-1-1 system calls.

If the 9-1-1 Call system detects a malfunction, any of the following may occur at the time the malfunction is detected, and at the beginning of each ignition cycle:

- The overhead console lights located on the Assist and 9-1-1 buttons will continuously be illuminated red.
- The Device Screen will display the following message "Vehicle device requires service. Please contact your dealer."
- An In-Vehicle Audio message will state "Vehicle device requires service. Please contact your dealer."

WARNING!

- **Ignoring the Assist and 9-1-1 buttons light could mean you will not have 9-1-1 Call services. If the Assist and 9-1-1 buttons light is illuminated, have an authorized dealer service the 9-1-1 Call system immediately.**

(Continued)

WARNING! ***(Continued)***

- **The Occupant Restraint Control module turns on the air bag Warning Light on the instrument panel if a malfunction in any part of the system is detected. If the air bag Warning Light is illuminated, have an authorized dealer service the ORC system immediately.**

Even if the 9-1-1 Call system is fully functional, factors beyond FCA US LLC's control may prevent or stop the 9-1-1 Call system operation. These include, but are not limited to, the following factors:

- The ignition key has been removed from the ignition and the delayed accessories mode is active.
- The ignition key is in STOP/OFF position.
- The vehicle's electrical systems are not intact.
- The 9-1-1 Call system software and/or hardware are damaged during a crash.
- The vehicle battery loses power or becomes disconnected during a vehicle crash.
- Operable 1X(voice/data) or 3G(data) network and/or Global Positioning Satellite signals are unavailable or obstructed.
- Equipment malfunction at the 9-1-1 operator facility.
- Operator error by the 9-1-1 operator.
- Operable 1X(voice/data) or 3G(data) network congestion.
- Weather.
- Buildings, structures, geographic terrain, or tunnels.

WARNING!

ALWAYS obey traffic laws and pay attention to the road. Some Uconnect Access services, including 9-1-1 and Assist, will NOT work without an operable 1X (voice/data) or 3G (data) network connection.

NOTE:

- Your vehicle may be transmitting data as authorized by the subscriber
- Never place anything on or near the vehicle's operable 1X(voice/data) or 3G(data) network and GPS antennas. You could prevent operable 1X(voice/data) or 3G(data) network and GPS signal reception, which can prevent your vehicle from placing an emergency call. Operable 1X(voice/data) or 3G(data) network and GPS signal reception is required for the 9-1-1 Call system to function properly.

General Information

This device complies with Part 15 of the FCC Rules. Operation is subject to the following two conditions: (1) This device may not cause harmful interference, and (2) this device must accept any interference received, including interference that may cause undesired operation.

BULB REPLACEMENT

General Information

- Before you replace a bulb check the contacts to be sure they are not oxidized.
- Replace the bulbs with the same type and wattage.
- After replacing a light bulb always check the correct orientation.
- Before replacing a bulb that is not functioning check that the fuse is intact.

NOTE: Lens fogging can occur under certain atmospheric conditions. This will usually clear as atmospheric conditions change to allow the condensation to change back into a vapor. Turning the lamps on will usually accelerate the clearing process.

Replacement Bulbs

Interior Bulbs

Lamps	Bulb Number
Front Courtesy Light	C5W
Front Courtesy Lights (Sun Visors)	C5W
Rear Dome Light (Models Without Retractable roof)	C5W
Rear Interior Lights (Models With Retractable roof)	C5W
Interior Lights	W5W
Dome Light (Glove Box)	W5W

Exterior Bulbs

Lamps	Bulb Number
Low Beam/High Beam Headlamps	H13
Front Position/Daytime Running Lights (DRL)	P21/5W
Front Direction Indicator Lamps	PY21W
Front Fog Lamps	H11
Side Indicators (Front And Side View Mirror)	WY5W
Tail/Brake Lights/Turn Indicators	P21W
Center High Mounted Stop Lamp (CHMSL)	LED (Serviced at an Authorized Dealer)
Reverse	W16W
License Plate Lamp	W5W

Replacing Exterior Bulbs

Headlamps

Hi/Lo Beam Light Halogen

To replace the bulbs proceed as follows:

1. Open the engine compartment and remove the headlamp bulb cap.

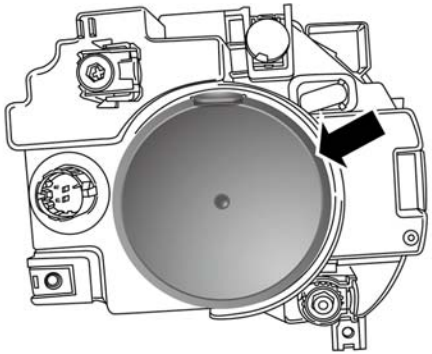

Headlamp Bulb Cap

2. Rotate the headlamp bulb socket counterclockwise then pull outwards.

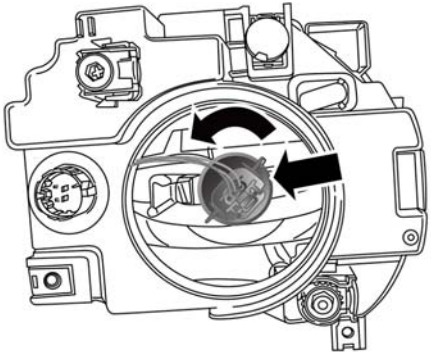

Headlamp Bulb Socket

3. Push on the locking tab on the headlamp bulb connector and remove the bulb and socket.

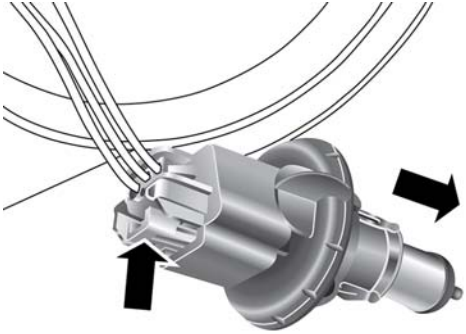

Headlamp Bulb Connector

Headlamp Bulb

4. Install the new headlamp bulb making sure it is properly locked.
5. Install the headlamp bulb and socket; turn it clockwise making sure it is properly locked.

WARNING!

Carry out the operation of replacing lamps only with the engine off. Also make sure that the engine is cold, to avoid the danger of burns.

Position Lights/Daytime Running Lights/Fog Lights

To replace the bulbs proceed as follows:

1. Turn the front wheels completely.
2. Use a suitable tool to remove the access door.

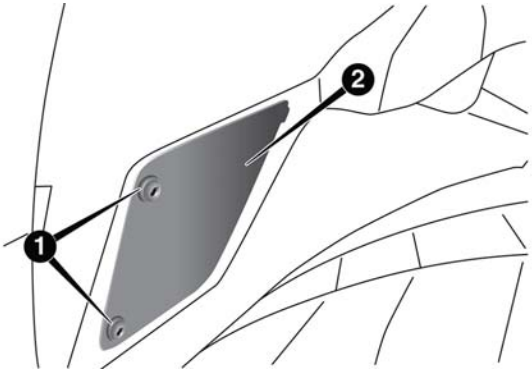

Position Light/Daytime Running Light/Fog Light Access

1 — Screws
2 — Access Door

3. Remove the electrical connectors.

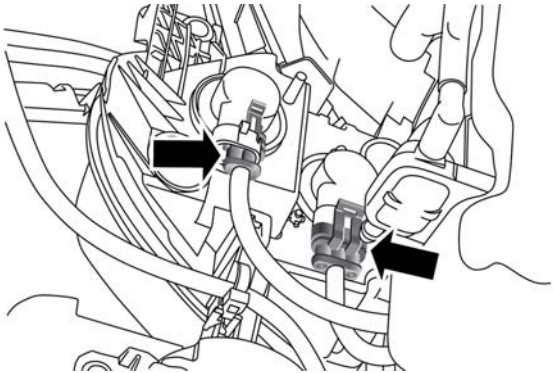

Electrical Connectors

4. Rotate in a counterclockwise direction (on the left-hand socket) or in a clockwise direction (on the right-hand socket) and remove the bulb and bulb socket.

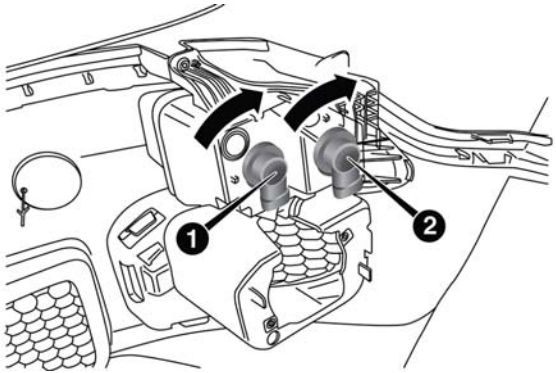

Position Light/Daytime Running Light Assembly

1 — DRL Bulb Socket
2 — Turn Signal Bulb Socket

5. To replace the bulb gently push bulb and rotate counterclockwise.

Bulb and Socket Assembly

1 — Bulb
2 — Rotate Bulb

6. Insert the new bulb by pushing on it and turning it clockwise. Make sure the bulb is correctly locked in place.
7. Install the bulb and sockets and rotate them clockwise (right side) and clockwise (left side), making sure that it is properly locked.
8. Reconnect the electrical connectors.
9. Reinstall the access door.

Front Fog Lights

To replace the bulbs proceed as follows:

1. Turn the front wheels completely.
2. Use a suitable tool to remove the access door.

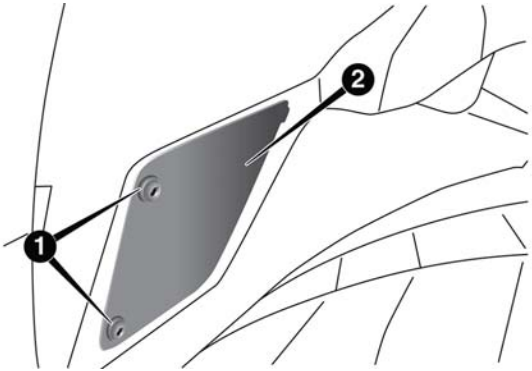

Position Light/Daytime Running Light/Fog Light Access

1 — Screws
2 — Access Door

3. By pushing the electrical connector tab remove the electrical connector.

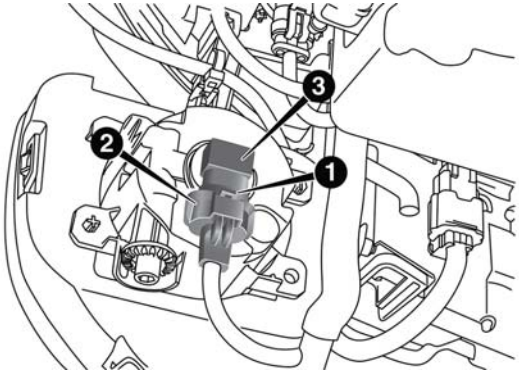

Fog Light Assembly

1 — Bulb Socket
2 — Electrical Connector
3 — Bulb

4. Rotate the bulb counterclockwise, and then replace the bulb.
5. Insert the new bulb in the socket, making sure the bulb is locked into place.
6. Reconnect the electrical connector.
7. Reinstall the access door.

Side Indicators

Front Side Indicators

To replace the bulb proceed as follows:

1. Operating from inside the engine compartment using a suitable tool release the retaining clip.

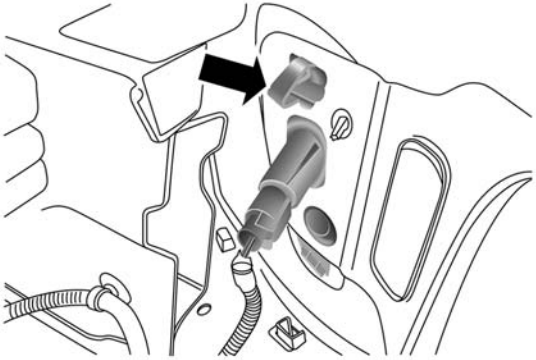

Lamp Retaining Clip

2. Remove lamp assembly by sliding it toward the outside.

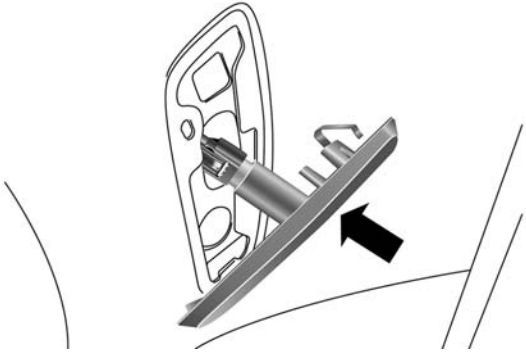

Lamp Assembly

3. Remove the electrical connector by pushing the tab then disconnect the electrical connector.

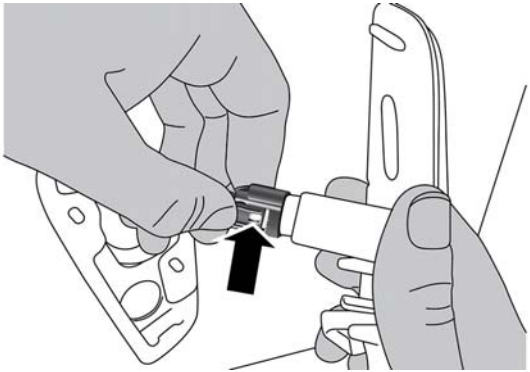

Electrical Connector

4. Rotate counterclockwise to release the bulb socket from the lamp assembly, and remove it.

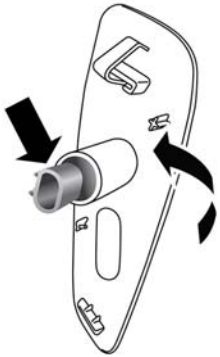

Bulb Socket

5. Remove the bulb from the socket

Bulb

6. Insert the new bulb in the socket.
7. Reinstall the bulb and socket into the lamp assembly by turning it clockwise, making sure it is locked into place.
8. Reconnect the electrical connector.
9. Reinstall the lamp assembly on the car, making sure it is locked into place.

Side Indicators on External Rear View Mirrors – (If Equipped)

CAUTION!
The procedure is described as a guideline. For the replacement of the lamp it is recommended that you contact your authorized dealer.

To replace the bulb proceed as follows:

1. Remove the mirror cap on the outside rear view mirror.

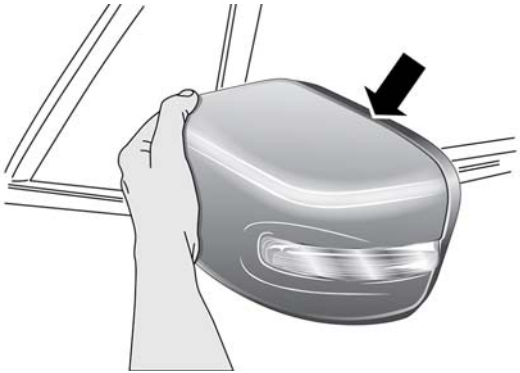

Mirror Cap

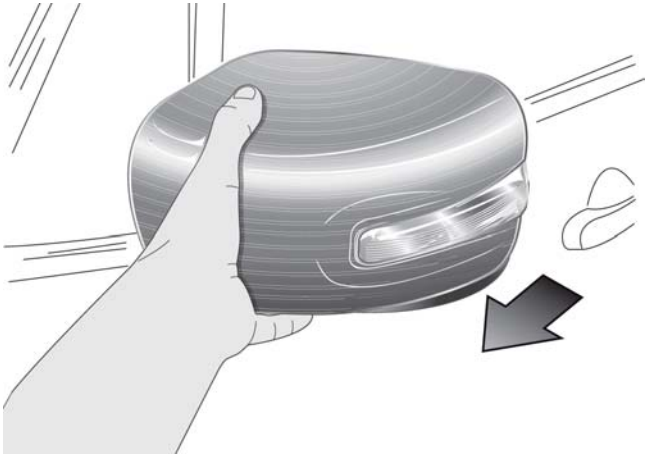

Removing the mirror cap

2. Remove the transparent lens assembly as shown.

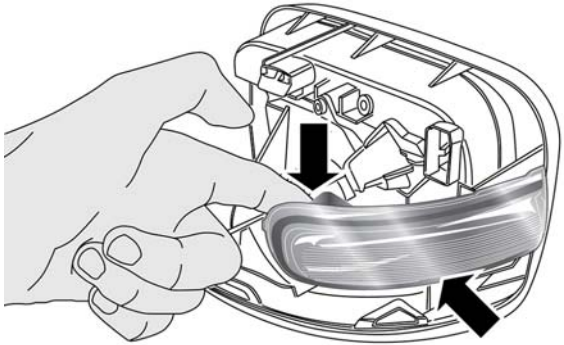

Transparent Lens

3. Remove the bulb socket and bulb from the transparent lens assembly by rotating the socket counterclockwise.

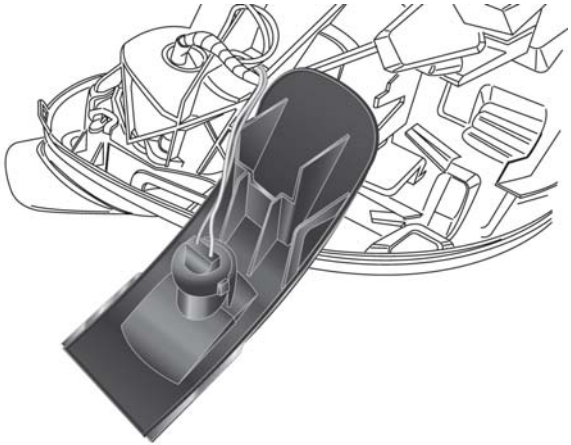

Transparent Lens Assembly

4. Remove the bulb from the bulb socket by pulling the bulb straight out.

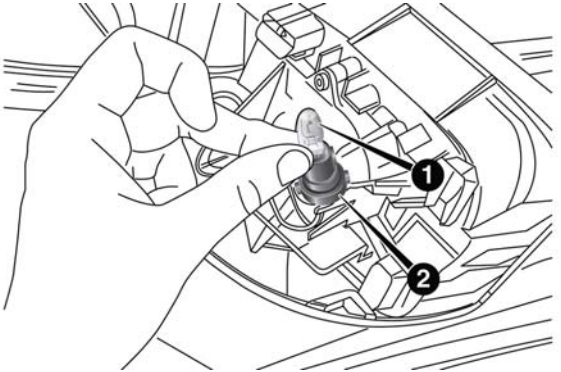

Bulb And Socket Assembly

1 — Bulb
2 — Bulb Socket

5. Insert the new bulb, making sure that it is locked into place
6. Reinstall the socket in to the transparent lens assembly.
7. Reinstall the cover on the outside rear view mirror, making sure it is locked into place.

Rear Tail Lamps

Contain the following:

- Position lights
- Stop lights
- Direction indicator
- REVERSE lights

To replace the bulbs proceed as follows:

1. Open the liftgate.
2. Using a suitable tool remove the door as shown.

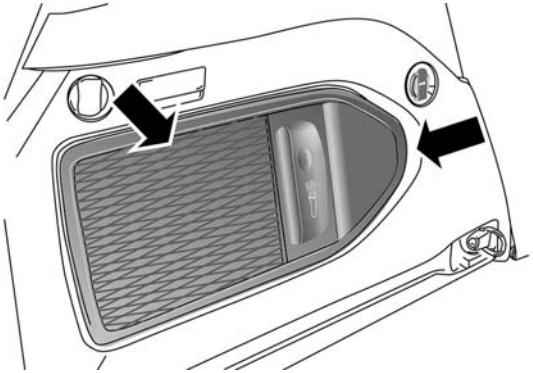

Trim Panel Door

3. Using a suitable tool remove fastener.
4. Disconnect the electrical connector by pushing the release.

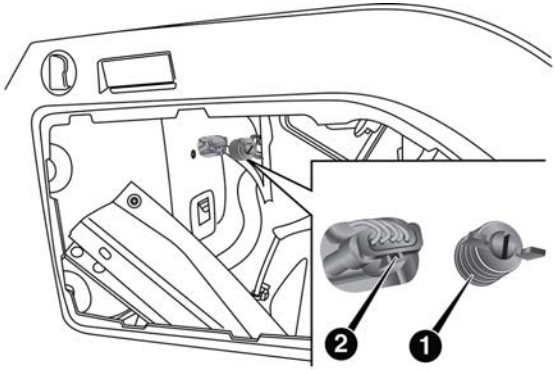

Rear Lamp Fastener and Electrical Connector

1 — Fastener
2 — Electrical Connector

5. Remove the rear tail lamp, sliding it toward the outside as shown.

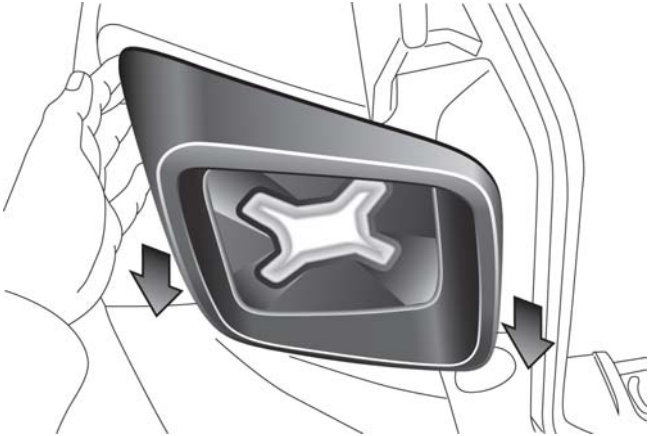

Tail Lamp Removal

6. Unscrew the screws and remove the rear tail lamp holder.

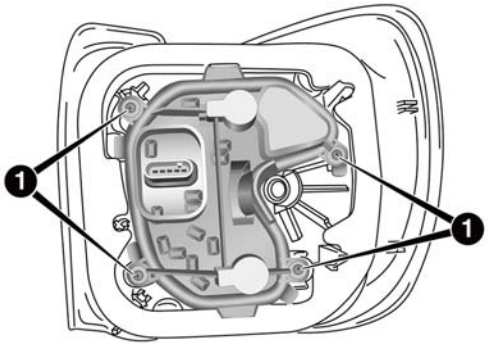

Rear Lamp Assembly

1 — Mounting Screws

7. Replace the bulb as necessary.

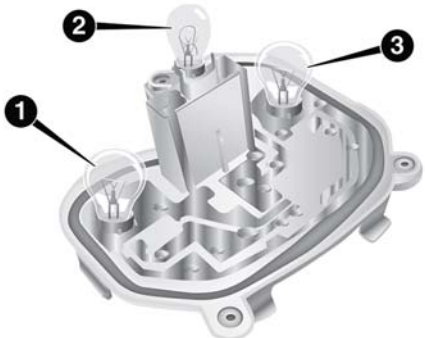

Rear Tail Lamp Holder

1 — Tail Light
2 — Reverse Bulb
3 — Position Light/Stop Light/Turn Signal

8. Insert the new bulb, making sure it is properly locked;
9. Reassemble the lamp assembly on the rear tail lamp housing, tightening the screws.
10. Reposition the rear tail lamp on the car.
11. Secure the fastener of the rear tail lamp and reconnect the electrical connector.
12. Reinstall the door making sure of its correct locked
13. Finally close the tailgate.

3th Stop Lamp

The CHMSL is LED. For their replacement see your authorized dealer.

License Plate Lights

To replace the bulbs proceed as follows:

1. Using a suitable tool remove the license plate lens.

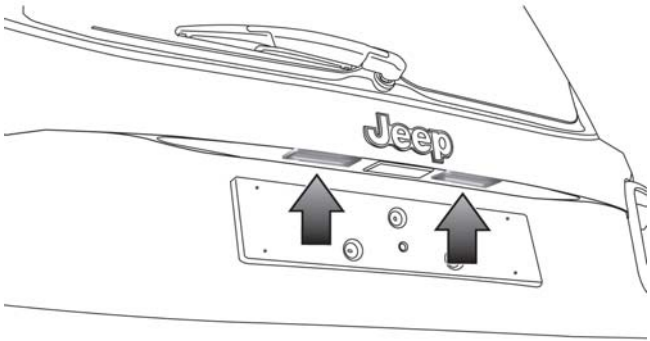

License Plate Light Location

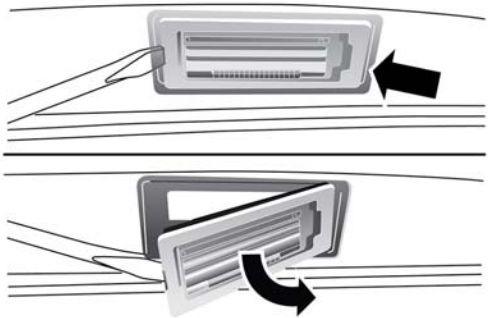

License Plate Light

2. Remove the bulbs from the individual side contacts.
3. Insert the new bulbs, and ensure that they are properly locked between the contacts.
4. Reinstall the license plate lens.

NOTE: If removal the license plate lens using a screwdriver, be sure to cover the tip of the screwdriver with a cloth so no damage is done to the lenses or the vehicle paint.

Replacing Interior Bulbs

Front Courtesy Light

To replace the bulbs proceed as follows:

1. Using a suitable tool remove the front courtesy light as shown.

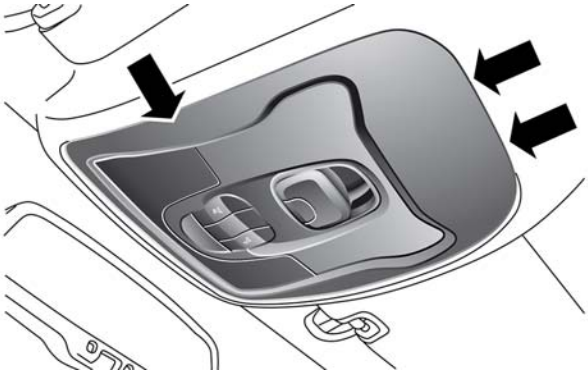

Front Courtesy Light Housing

2. Release the retainer clips and bulb housing as shown.

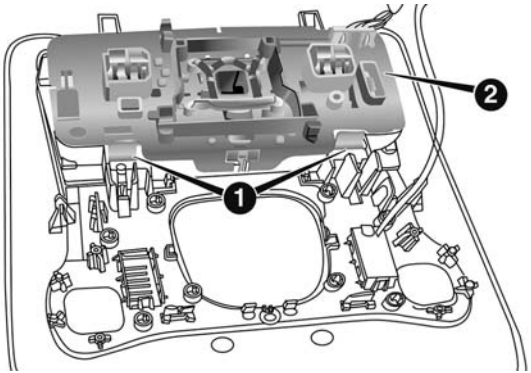

Front Courtesy Bulb Housing

1 — Retaining Clips
2 — Bulb Housing

3. Replace the bulbs by pulling straight out of bulb housing.

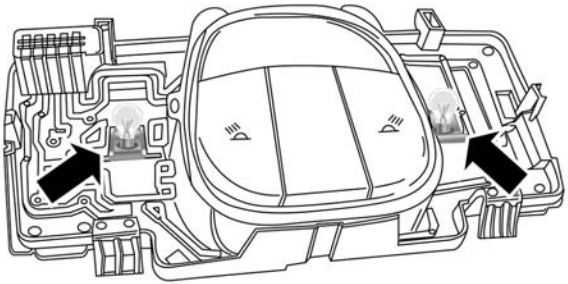

Front Courtesy Bulb Housing

4. Insert the new bulbs, making sure that they are properly locked.
5. Reassemble the bulb housing and courtesy light housing making sure that they are properly locked.

6. Install the front courtesy light making sure that it is properly locked.

Dome Light Vanity Mirror

To replace the bulbs proceed as follows:

1. Lift the cover of the mirror and pull out the visor mirror light cover.
2. Replace the bulb, releasing it from the side contacts, and then insert the new bulb, making sure that it is properly locked between the contacts.

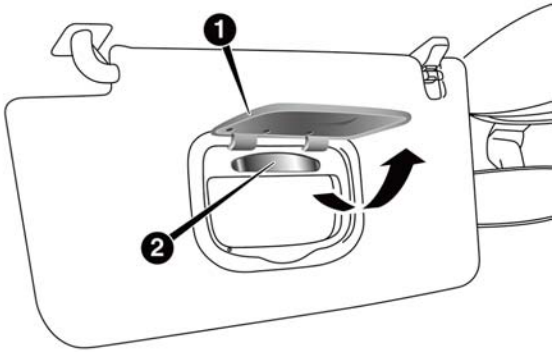

Visor

1 — Visor Mirror Cover
2 — Visor Mirror Light

3. Reinstall the visor mirror light cover making sure that it is properly locked.
4. Finally lower the visor mirror cover to the mirror.

Dome Light Glove Compartment

To replace the bulb proceed as follows:

1. Open the glove compartment;
2. Place your fingers inside the light assembly, pull the bulb to replace it.

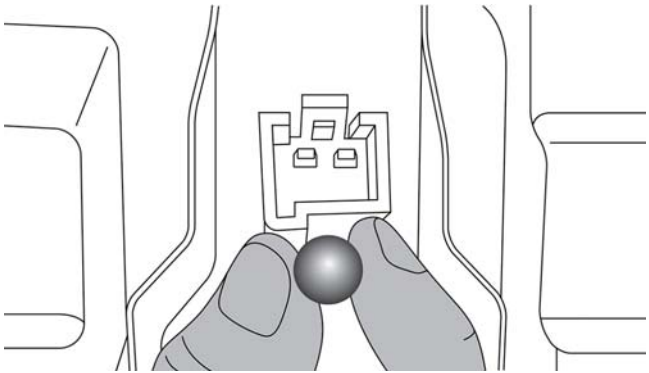

Bulb Removal/Installation

3. Insert the new bulb, making sure it is properly locked.

Rear Dome Light — Without Retractable Roof

To replace the bulbs proceed as follows:

1. Using a suitable tool release the lamp assembly at both the ends.
2. Open the flap and replace the bulb.

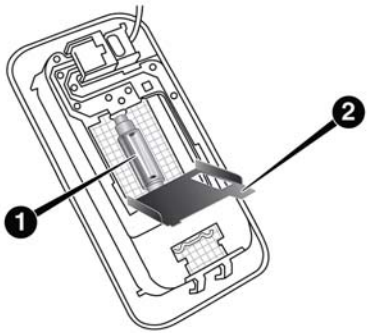

Rear Dome Light Housing

1 — Bulb
2 — Flap

3. Insert the new bulb, locking it between the contacts.
4. Reinstall the dome light.

Dome Light — MY SKY

To replace the bulbs proceed as follows:

1. Lower the handle in the direction shown remove the dome light.

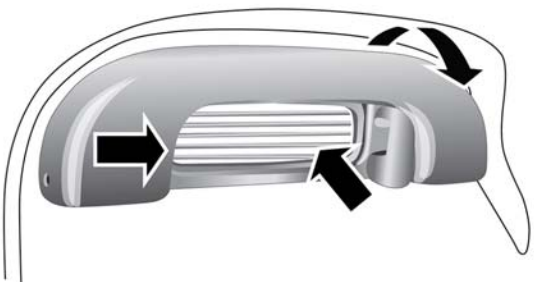

Retractable Roof Light

2. Replace the bulb by removing it from the side contacts.

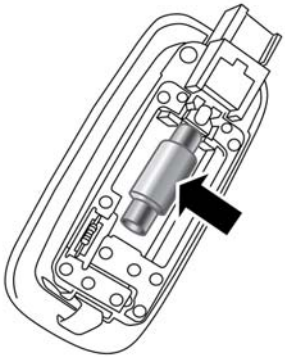

Bulb

3. Insert the new bulb, locking it between the contacts.
4. Reinstall the dome light.

Interior Cargo Lights

To replace the bulbs proceed as follows:

1. Open the luggage compartment and remove the dome light assembly.
2. Open the light cover and replace the bulb.

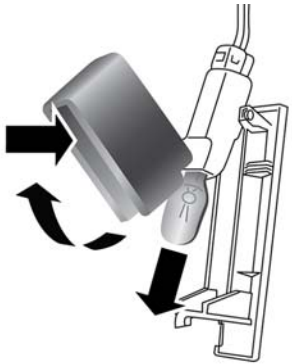

Light Cover

3. Close the light cover over the bulb.
4. Reinstall the dome light in its correct position.

WARNING!

- **Before proceeding with the replacement of the lamp wait for the exhaust pipes are cool: DANGER OF BURNS!**
- **Modifications or repair of the electrical system performed incorrectly and without taking into account the technical characteristics can cause malfunctions with the risk of fire.**
- **Halogen lamps contain gas under pressure, in the event of breakage be careful of the projection of fragments of glass.**
- **Halogen lamps must be handled by touching only the metallic part. If the transparent bulb is in contact with the fingers, reduces the intensity of the emitted**

(Continued)

WARNING! ***(Continued)***

light and you can also affect the life of the lamp. In case of accidental contact, rub the bulb with a cloth dampened with alcohol and allow to dry.

FUSES

WARNING!

- **When replacing a blown fuse, always use an appropriate replacement fuse with the same amp rating as the original fuse. Never replace a fuse with another fuse of higher amp rating. Never replace a blown fuse with metal wires or any other material. Failure to use proper fuses may result in serious personal injury, fire and/or property damage.**

(Continued)

WARNING! ***(Continued)***

- **Before replacing a fuse, make sure that the ignition is off and that all the other services are switched off and/or disengaged.**
- **If the replaced fuse blows again, contact an authorized dealer.**
- **If a general protection fuse for safety systems (air bag system, braking system), power unit systems (engine system, gearbox system) or steering system blows, contact an authorized dealer.**

General Information

The fuses protect electrical systems against excessive current.

When a device does not work you must check the electrical circuit inside the fuse for a break/melt.

Also please be aware that when using power outlets for extended periods of time with the engine off may result in vehicle battery discharge.

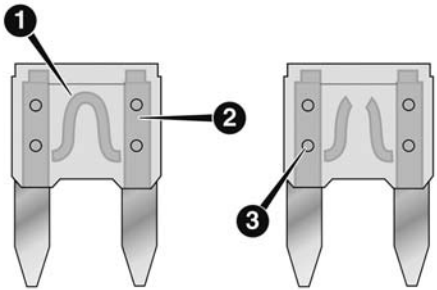

Blade Fuses

1 — Electrical Circuit
2 — Blade Fuse With Good Electrical Circuit
3 — Blade Fuse With Bad Electrical Circuit

Fuse Removal

To replace a fuse use the extractor attached to the fuse cover (located on the inside of the engine compartment fuse cover.

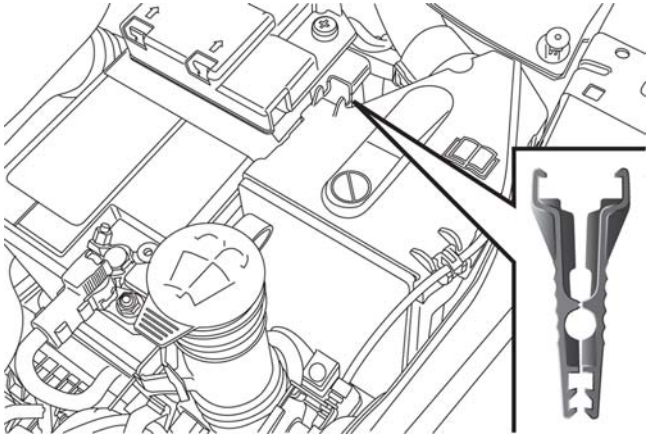

Fuse Extractor Location

Access To The Fuses

The fuses are grouped into four controllers located in the engine compartment, under the instrument panel and on the inside of the left side cargo trim panel.

Engine Compartment Fuses/Distribution Unit

The engine compartment fuse panel is located on the left side of the engine compartment.

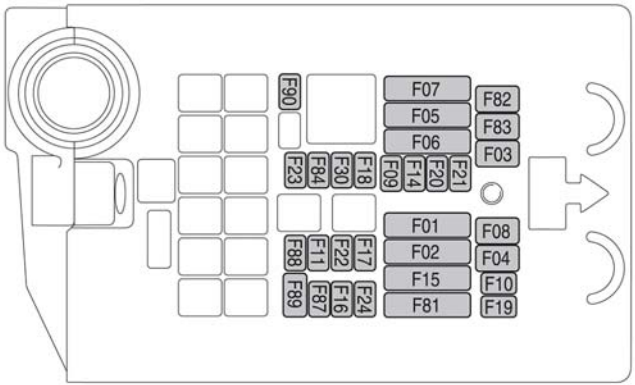

Engine Compartment Fuse Cavities

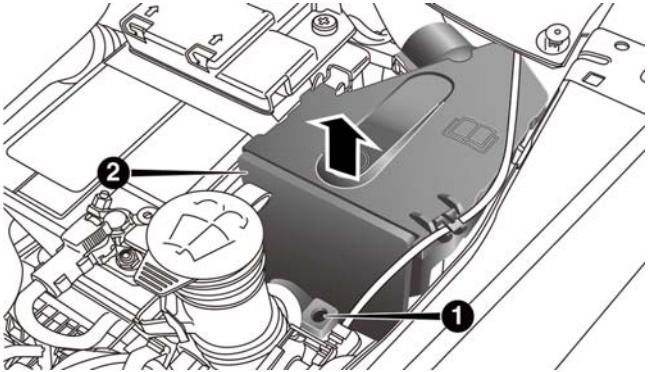

Fuse Panel & Cover Location

1 — Mounting Screw
2 — Fuse Cover

Removing Fuse Cover and Locking Screw

Proceed as follows:

- Slowly turn the screw counterclockwise.
- Slowly release the screw.
- Remove the fuse cover by sliding it upward.

Mounting Fuse Cover and Locking Screw

Proceed as follows:

- Properly secure the fuse cover to the box, slide completely from top to bottom.
- Fully depress the screw, using the special screwdriver supplied.
- Slowly turn the screw clockwise.
- Release the screw.

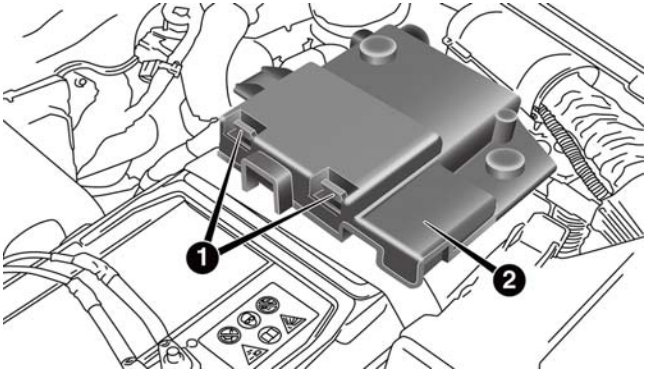

Battery Fuse Cover Location

1 — Fuse Cover Tabs
2 — Fuse Cover

Cavity	Maxi Fuse	Cartridge Fuse	Micro Fuse	Description
F01	70 Amp Tan	–	–	Module Body Computer
F02	70 Amp Tan	–	–	Module Body Computer, Rear Distribution Units
F03	–	20 Amp Blue	–	Controller Power Supply Body Computer
F04	–	30 Amp Pink	–	Brake Control Electronics Module
F05	70 Amp Tan	–	–	Electric Power-Assisted Steering
F06	20 Amp Yellow	–	–	Engine Cooling fan
F07	40 Amp Orange – 1.4 Without A/C 50 Amp Red – 1.4 With A/C And All 2.4 Models	–	–	Engine Cooling fan
F08	–	30 Amp Pink	–	Automatic Transmission, GSM
F09	–	–	5 Amp Tan	Control Module Engine
F10	–	–	15 Amp Blue	Horn

Cavity	Maxi Fuse	Cartridge Fuse	Micro Fuse	Description
F11	–	–	10 Amp Red – 1.4 Engines 25 Amp Clear – 2.4 Engines	Supply Secondary Loads
F14	–	–	7.5 Amp Brown	Heater "Blow By"
F14	–	–	5 Amp Tan	Pump Power "After Run"
F15	40 Amp Orange	–	–	Brake Control Module Pump
F16	–	–	5 Amp Tan	Engine Control Module Power, Automatic Transmission
F17	–	–	10 Amp Red – 1.4 Engines 15 Amp Blue – 2.4 Engines	Supply Primary Loads
F18	–	–	20 Amp Yellow	12V Rear Cargo Outlet Ignition Powered
F19	–	–	7.5 Amp Brown	Air Conditioner Compressor
F20	–	–	5 Amp Tan	Electronic Power Four-Wheel Drive

Cavity	Maxi Fuse	Cartridge Fuse	Micro Fuse	Description
F21	–	–	15 Amp Blue	Fuel Pump
F22	–	–	20 Amp Yellow	Power Control Module Engine
F23	–	–	30 Amp Green	Heated Windshield – If Equipped
F24	–	–	15 Amp Blue	Electronic Unit Supply Automatic Transmission
F30	–	–	20 Amp Yellow (Customer Installed)	12V Rear Cargo Outlet Constant Battery Powered
F83	–	40 Amp Green	–	Air Conditioning Fan
F84	–	–	30 Amp Green	Power Supply All Wheel Drive
F87	–	–	5 Amp Tan	Shift Lever Automatic Transmission
F88	–	–	7.5 Amp Brown	Heated Outside Mirrors
F89	–	–	30 Amp Green	Heated Rear Window
F90	–	–	5 Amp Tan	IBS Sensor (Battery State Of Charge)

Body Computer Fuse Center

The controller is located at the left side of the steering column at the bottom of the instrument panel.

For the fuse replacement see your authorized dealer.

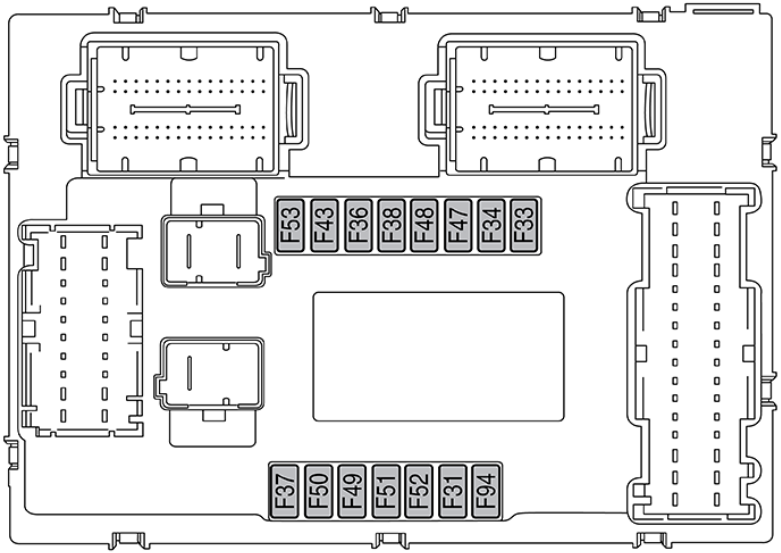

Body Controller Fuse Cavities

Cavity	Mini Fuse	Description
F31	7.5 Amp Brown	Flashes/Electrical Movement Front Seats/Fan Air Conditioning
F33	20 Amp Yellow	Power Window Front (Driver Side)
F34	20 Amp Yellow	Power Window Front (Passenger Side)
F36	15 Amp Blue	Supply Uconnect System, Air Conditioning, Alarm, Power Folding Outside Mirrors, USB Port
F37	10 Amp Red	System Power Forward Collision Warning Plus, All Wheel Drive (AWD), IPC
F38	20 Amp Yellow	Central Locking
F42	7.5 Amp Brown	Power Under Lock and Key
F43	20 Amp Yellow	Bi-directional Pump Washer
F47	20 Amp Yellow	Power Rear Window (Driver Side)
F48	20 Amp Yellow	Power Rear Window (Passenger Side)

Cavity	Mini Fuse	Description
F49	7.5 Amp Brown	Supply ParkSense, Spot Lights Front Dome, Mirror, Electric Motor Retractable Roof, Heated Front Seats, Stabilizer Battery, ESC System, ESL
F50	7.5 Amp Brown	Supply Air Bag
F51	7.5 Amp Brown	Alarm Power, Front Courtesy Light, Air Conditioning Compressor, Brake Pedal Switch (NC), Plaque Automatic Transmission, Compass, Rear Camera, Leveling Headlights, Air Conditioning
F53	7.5 Amp Brown	Supply IPC/Starter Device/System Keyless Enter-N-Go
F94	15 Amp Blue	Power Socket

Rear Cargo Fuse/Relay Distribution Unit

To access the fuses, remove the access door from the left rear panel of the rear cargo area.

The fuses may be contained in two units. fuse holder No. 1 is located closest to the rear of the vehicle and fuse holder No. 2 (if equipped with trailer towing) is located closest to the front of the vehicle.

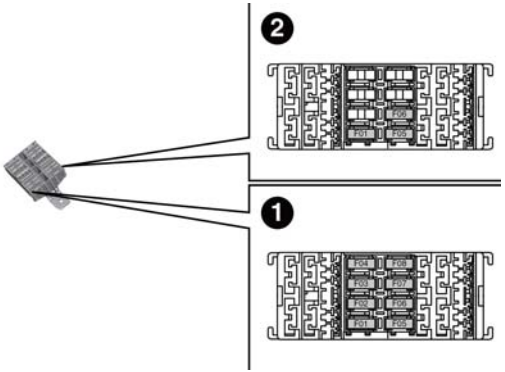

Rear Cargo Fuse Cavities

1 — Fuse Holder No. 1
2 — Fuse Holder No. 2

Fuse Holder No. 1

Cavity	Mini Fuse	Description
F1	30 Amp Blue	Power Inverter
F2	20 Amp Yellow	HIFI Audio System
F3	20 Amp Yellow	MY SKY
F4	7.5 Amp Brown	Lumbar Adjustment Front Seat (Driver Side)
F5	30 Amp Green	Power Seat (Driver Side)
F6	7.5 Amp Brown	Power Seat (Driver Side And Passenger Side)
F7	30 Amp Green	Lumbar Adjustment Front Seats (Driver Side And Passenger Side)
F8	20 Amp Yellow	Heating Front Seats

On the controller there is also a 20 amp fuse for the sun visor of the retractable roof.

Fuse Holder No. 2

Cavity	Mini Fuse	Description
F1	10 Amp Red	Controller Exterior Lighting On Trailer
F5	15 Amp Blue	Controller Exterior Lighting Lights (Drivers Side)
F6	15 Amp Blue	Controller Exterior Lighting Lights (Passenger Side)

JACKING AND TIRE CHANGING

WARNING!

- **Do not attempt to change a tire on the side of the vehicle close to moving traffic. Pull far enough off the road to avoid the danger of being hit when operating the jack or changing the wheel.**
- **Being under a jacked-up vehicle is dangerous. The vehicle could slip off the jack and fall on you. You could be crushed. Never put any part of your body**

(Continued)

WARNING! ***(Continued)***

under a vehicle that is on a jack. If you need to get under a raised vehicle, take it to a service center where it can be raised on a lift.
- **Never start or run the engine while the vehicle is on a jack.**
- **The jack is designed to be used as a tool for changing tires only. The jack should not be used to lift the vehicle for service purposes. The vehicle should be jacked on a firm level surface only. Avoid ice or slippery areas.**

Jack Location/Spare Tire Stowage

The jack and tools are located in the rear storage compartment if equipped, inside a special container.

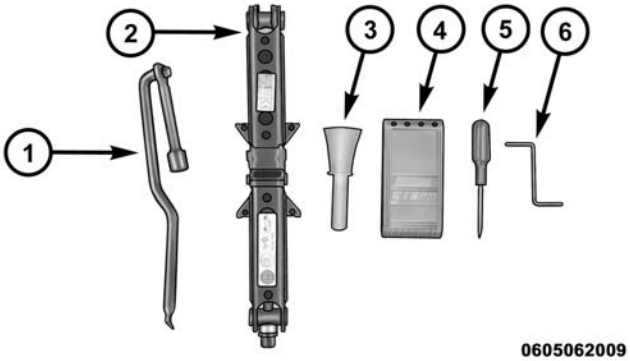

Jack And Tools

1 — Wheel Bolt Wrench
2 — Jack
3 — Emergency Funnel
4 — Wheel Chocks
5 — Screwdriver
6 — Emergency Allen Key

1. Open the liftgate.
2. Lift the access cover using the load floor pull strap.

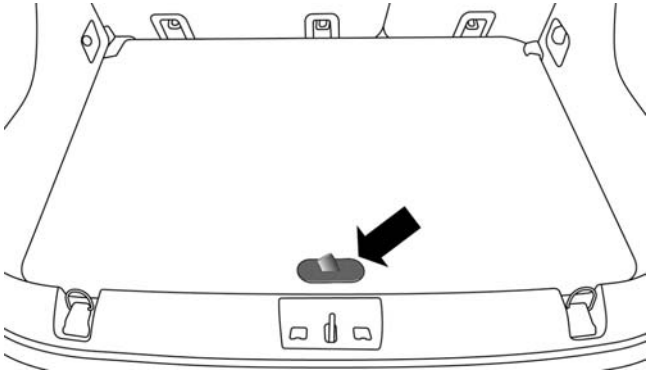

Load Floor Pull Strap

3. Remove the fastener securing the spare tire.
4. Remove the chocks.
5. Remove the jack and wheel bolt wrench.
6. Remove the spare tire.

WARNING!

A loose tire or jack thrown forward in a collision or hard stop could endanger the occupants of the vehicle. Always stow the jack parts and the spare tire in the places provided. Have the deflated (flat) tire repaired or replaced immediately.

Preparations For Jacking

1. Park the vehicle on a firm level surface as far from the edge of the roadway as possible. Avoid icy or slippery areas.

WARNING!

Do not attempt to change a tire on the side of the vehicle close to moving traffic, pull far enough off the road to avoid being hit when operating the jack or changing the wheel.

2. Turn on the Hazard Warning flasher.
3. Set the Electric Park Brake.
4. Place the shift lever into PARK (automatic transmission) or REVERSE (manual transmission).
5. Turn the ignition off to the STOP/OFF position.
6. Chock both the front and rear of the wheel diagonally opposite of the jacking position. For example, if changing the right front tire, chock the left rear wheel.

NOTE: Passengers should not remain in the vehicle when the vehicle is being jacked.

Jacking Instructions

WARNING!

Carefully follow these tire changing warnings to help prevent personal injury or damage to your vehicle:

- **Always park on a firm, level surface as far from the edge of the roadway as possible before raising the vehicle.**

(Continued)

WARNING! *(Continued)*

- Turn on the Hazard Warning flasher.
- Chock the wheel diagonally opposite the wheel to be raised.
- Apply the parking brake and place an automatic transmission in PARK.
- Never start or run the engine with the vehicle on a jack.
- Do not let anyone sit in the vehicle when it is on a jack.
- Do not get under the vehicle when it is on a jack. If you need to get under a raised vehicle, take it to a service center where it can be raised on a lift.
- Only use the jack in the positions indicated and for lifting this vehicle during a tire change.
- If working on or near a roadway, be extremely careful of motor traffic.

(Continued)

WARNING! *(Continued)*

- To assure that spare tires, flat or inflated, are securely stowed, spares must be stowed with the valve stem facing the ground.

Jack Warning Label

CAUTION!

Do not attempt to raise the vehicle by jacking on locations other than those indicated in the Jacking Instructions for this vehicle.

1. Remove the spare tire, jack, and wheel bolt wrench.
2. If equipped with wheels where the center cap covers the wheel bolts, use the wheel bolt wrench to pry the center cap off carefully before raising the vehicle.
3. Before raising the vehicle, use the wheel bolt wrench to loosen, but not remove, the wheel bolts on the wheel with the flat tire. Turn the wheel bolts counter-clockwise one turn while the wheel is still on the ground.
4. Place the jack underneath the lift area that is closest to the flat tire. Turn the jack screw clockwise to firmly engage the jack saddle with the lift area of the sill flange, centering the jack saddle inside the cutout in the sill cladding.

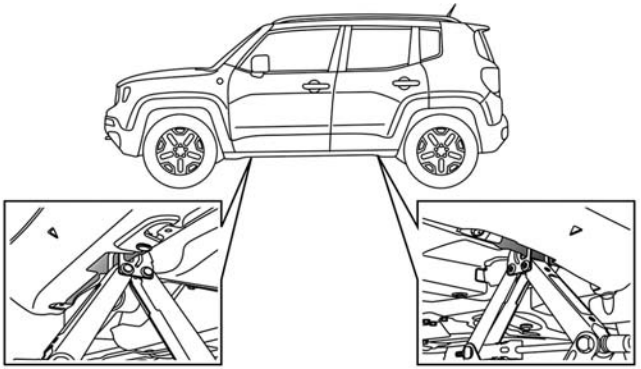

Jacking Locations

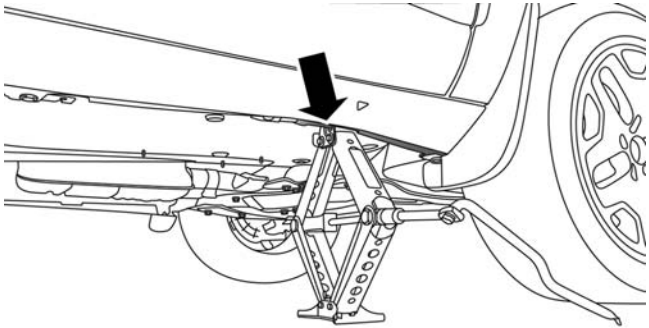

Front Jacking Location

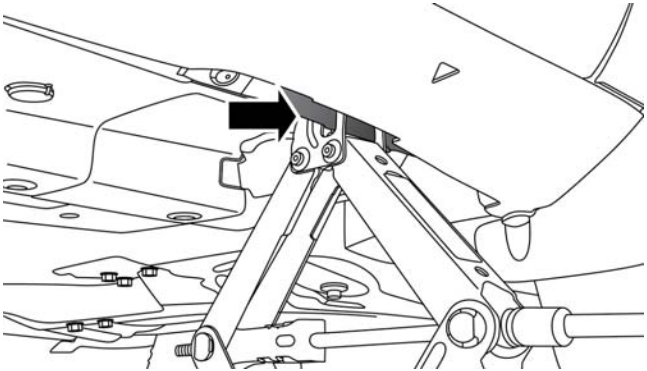

Front Jacking Engagement Point

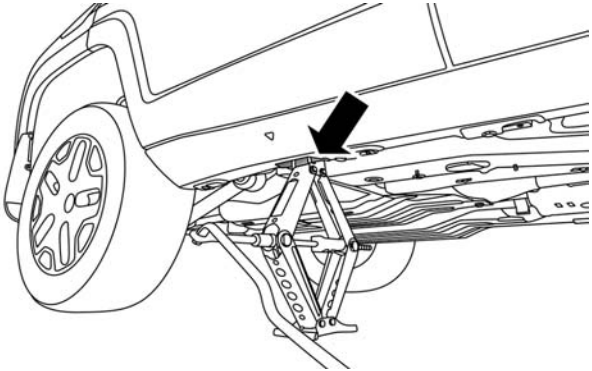

Rear Jacking Location

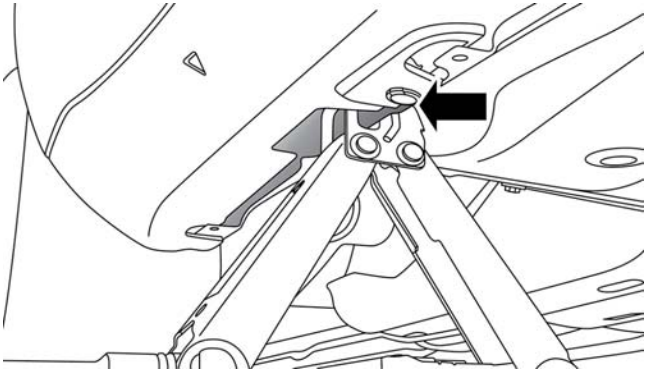

Rear Jacking Engagement Point

5. Raise the vehicle just enough to remove the flat tire.

WARNING!

Raising the vehicle higher than necessary can make the vehicle less stable. It could slip off the jack and hurt someone near it. Raise the vehicle only enough to remove the tire.

6. Remove the wheel bolts and tire.
7. Mount the spare tire.

CAUTION!

Be sure to mount the spare tire with the valve stem facing outward. The vehicle could be damaged if the spare tire is mounted incorrectly.

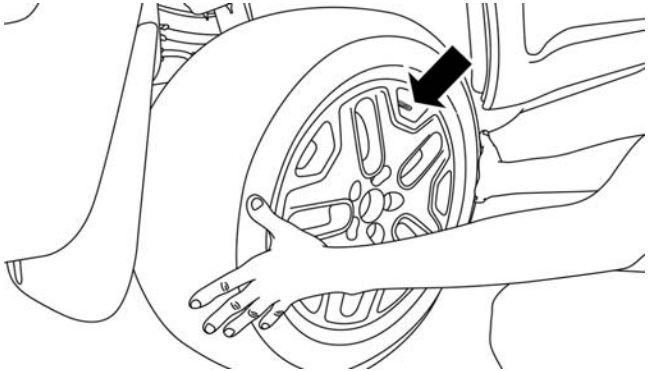

Mounting Spare Tire

NOTE:

- Your vehicle may be equipped with a compact spare tire or a limited — use spare tire. For further information refer to "Tires — General Information" in "Maintaining And Caring For Your Vehicle".
- For vehicles so equipped, do not attempt to install a center cap or wheel cover on the compact spare.

8. Install the wheel bolts with the threaded end of the wheel bolt toward the wheel. Lightly tighten the wheel bolts.

WARNING!

To avoid the risk of forcing the vehicle off the jack, do not fully tighten the wheel bolts until the vehicle has been lowered. Failure to follow this warning may result in serious injury.

9. Lower the vehicle to the ground by turning the jack handle counterclockwise.
10. Finish tightening the wheel bolts. Push down on the wrench while at the end of the handle for increased leverage. Tighten the wheel bolts in a star pattern until each wheel bolt has been tightened twice. Refer to "Torque Specifications" in this section for the proper lug bolt torque. If in doubt about the correct tightness, have them checked with a torque wrench by your authorized dealer or at a service station.

11. Securely stow the jack, tools, chocks and flat tire.

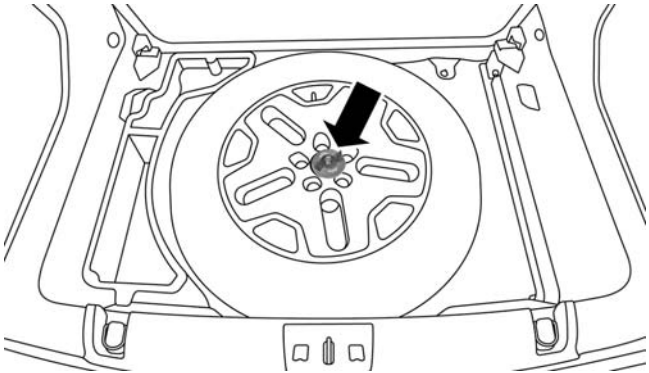

Properly Stowed Tire

WARNING!

A loose tire or jack thrown forward in a collision or hard stop could endanger the occupants of the vehicle. Always stow the jack parts and the spare tire in the places provided. Have the deflated (flat) tire repaired or replaced immediately.

Road Tire Installation

1. Mount the road tire on the axle.
2. Install the remaining wheel bolts with the threaded end of the wheel bolt toward the wheel. Lightly tighten the wheel bolts.

WARNING!

To avoid the risk of forcing the vehicle off the jack, do not tighten the lug nuts fully until the vehicle has been lowered. Failure to follow this warning may result in serious injury.

3. Lower the vehicle to the ground by turning the jack handle counterclockwise.
4. Finish tightening the wheel bolts. Push down on the wrench while at the end of the handle for increased leverage. Tighten the wheel bolts in a star pattern until each wheel bolt has been tightened twice. Refer to "Torque Specifications" in the "Technical Data" section for the proper lug bolt torque. If in doubt about the correct tightness, have them checked with a torque wrench by your authorized dealer or service station.
5. Lower the jack until it is free. Remove the wheel chocks. Stow the jack and tools back in the proper storage location. Release the Electric Park Brake before driving the vehicle.
6. After 25 miles (40 km) check the wheel bolt torque with a torque wrench to ensure that all wheel bolts are properly seated against the wheel.

TIRE SERVICE KIT STORAGE

The Tire Service Kit is located in the rear storage compartment inside a storage container. Located inside the container are a screwdriver and the emergency fuel funnel. To access the Tire Service Kit open the liftgate and remove the load floor.

Tire Service Kit — If Equipped

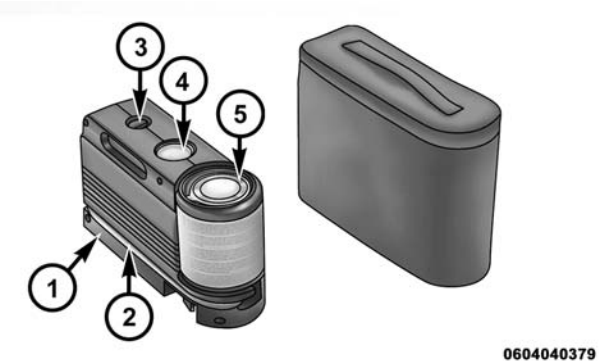

Tire Service Kit Components

1 — Power Plug (located on bottom side of Tire Service Kit)
2 — Sealant Hose (Clear)
3 — Power Button
4 — Pressure Gauge
5 — Sealant Bottle

If a tire is punctured, you can make a first emergency repair using the Tire Service Kit located in the rear storage compartment inside the storage container.

Tire punctures of up to 1/4 inch (6 mm) can be repaired; the kit can be used in all weather conditions. Do not remove the foreign object from the punctured tire, i.e., screw or nail.

Remove the Tire Service Kit from the vehicle, take it out from the bag and place it near the punctured tire. Screw the clear flexible filling tube to the tire valve.

WARNING!

- **Do not attempt to seal a tire on the side of the vehicle closest to traffic. Pull far enough off the road to avoid the danger of being hit when using the Tire Service Kit.**

(Continued)

WARNING! ***(Continued)***

- **Do not use Tire Service Kit or drive the vehicle under the following circumstances:**
  - **If the puncture in the tire tread is approximately 1/4 inch (6 mm) or larger.**
  - **If the tire has any sidewall damage.**
  - **If the tire has any damage from driving with extremely low tire pressure.**
  - **If the tire has any damage from driving on a flat tire.**
  - **If the wheel has any damage.**
  - **If you are unsure of the condition of the tire or the wheel.**
- **Keep Tire Service Kit away from open flames or heat source.**

(Continued)

WARNING! ***(Continued)***

- **A loose Tire Service Kit thrown forward in a collision or hard stop could endanger the occupants of the vehicle. Always stow the Tire Service Kit in the place provided. Failure to follow these warnings can result in injuries that are serious or fatal to you, your passengers, and others around you.**
- **Take care not to allow the contents of Tire Service Kit to come in contact with hair, eyes, or clothing. Tire Service Kit sealant is harmful if inhaled, swallowed, or absorbed through the skin. It causes skin, eye, and respiratory irritation. Flush immediately with plenty of water if there is any contact with eyes or skin. Change clothing as soon as possible, if there is any contact with clothing.**

(Continued)

WARNING! ***(Continued)***

- **Tire Service Kit Sealant solution contains latex. In case of an allergic reaction or rash, consult a physician immediately. Keep Tire Service Kit out of reach of children. If swallowed, rinse mouth immediately with plenty of water and drink plenty of water. Do not induce vomiting! Consult a physician immediately.**

Insert the power plug into the vehicle power outlet socket. Start the vehicle engine.

Push the Tire Service Kit power button to the “I” position. The electric compressor will be turned on, sealant and air will inflate the tire.

Minimum 26 psi (1.8 bar) of pressure should be reached within 20 minutes. If the pressure has not been reached turn off and remove the Tire Service Kit, drive the vehicle 30 feet (10 meters) back and forth, to better distribute the sealant inside the tire.

Attach the clear flexible filling tube of the compressor directly to the tire valve and repeat the inflation process.

When the correct pressure has been reached, start driving the vehicle to uniformly distribute the sealant inside the tire. After 10 minutes, stop and check the tire pressure. If the pressure is below 19 psi (1.3 bar), do not drive the vehicle, as the tire is too damaged, contact the nearest Authorized Dealer.

WARNING!

Tire Service Kit is not a permanent flat tire repair. Have the tire inspected and repaired or replaced after using Tire Service Kit. Do not exceed 65 mph (110 km/h) until the tire is repaired or replaced. Failure to follow this warning can result in injuries that are serious or fatal to you, your passengers, and others around you. Have the tire checked as soon as possible at an Authorized Dealer.

If the pressure is at 19 psi (1.3 bar) or above repeat the inflation process to reach the correct tire pressure and continue driving.

Peel off the warning label from the bottle and place it on the dashboard as a reminder to the driver that the tire has been treated with Tire Service Kit.

WARNING!

The metal end fitting from Power Plug may get hot after use, so it should be handled carefully.

NOTE: Replace the sealant canister prior to the expiration date at your authorized dealer.

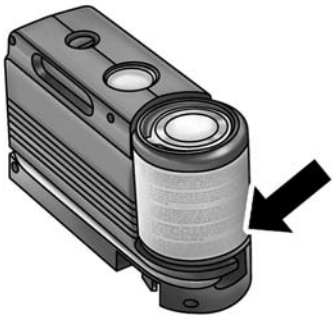

Tire Service Kit Expiration Date Location

WARNING!

Store the sealant canister in its special compartment, away from sources of heat. Failure to follow this WARNING may result in sealant canister rupture and serious injury or death.

JUMP STARTING

If your vehicle has a discharged battery it can be jump-started using a set of jumper cables and a battery in another vehicle or by using a portable battery booster pack. Jump starting can be dangerous if done improperly so please follow the procedures in this section carefully.

NOTE: When using a portable battery booster pack follow the manufacturer's operating instructions and precautions.

CAUTION!

Do not use a portable battery booster pack or any other booster source with a system voltage greater than 12 Volts or damage to the battery, starter motor, alternator or electrical system may occur.

WARNING!

Do not attempt jump starting if the battery is frozen. It could rupture or explode and cause personal injury.

Preparations For Jump Start

The battery in your vehicle is located in the front of the engine compartment, behind the left headlight assembly.

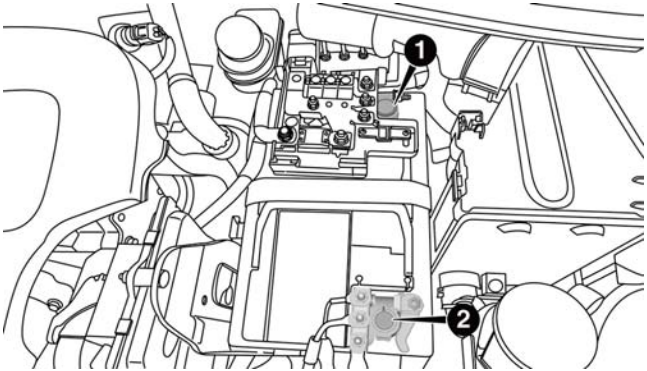

Battery Posts

1 — Positive Battery Post
2 — Negative Battery Post

NOTE: The positive battery post is covered with a protective cap. Lift up on the cap to gain access to the positive battery post.

WARNING!

- **Take care to avoid the radiator cooling fan whenever the hood is raised. It can start anytime the ignition switch is ON. You can be injured by moving fan blades.**
- **Remove any metal jewelry such as rings, watch bands and bracelets that could make an inadvertent electrical contact. You could be seriously injured.**
- **Batteries contain sulfuric acid that can burn your skin or eyes and generate hydrogen gas which is flammable and explosive. Keep open flames or sparks away from the battery.**

Proceed as follows:

1. Set the Electric Park Brake, shift the automatic transmission into PARK (manual transmission in NEUTRAL) and turn the ignition to STOP/OFF.
2. Turn off the heater, radio, and all unnecessary electrical accessories.
3. If using another vehicle to jump start the battery, park the vehicle within the jumper cables reach, set the parking brake and make sure the ignition is STOP/OFF.

WARNING!

Do not allow vehicles to touch each other as this could establish a ground connection and personal injury could result.

Jump Starting Procedure

WARNING!

Failure to follow this jump-starting procedure could result in personal injury or property damage due to battery explosion.

CAUTION!

Failure to follow these procedures could result in damage to the charging system of the booster vehicle or the discharged vehicle.

Connecting The Jumper Cables

1. Connect the positive **(+)** end of the jumper cable to the positive **(+)** post of the discharged vehicle.
2. Connect the opposite end of the positive **(+)** jumper cable to the positive **(+)** post of the booster battery.
3. Connect the negative **(-)** end of the jumper cable to the negative **(-)** post of the booster battery.
4. Connect the opposite end of the negative **(-)** jumper cable to a good engine ground (exposed metal part of the discharged vehicle's engine) away from the battery and the fuel injection system.

WARNING!

Do not connect the jumper cable to the negative (-) post of the discharged battery. The resulting electrical spark could cause the battery to explode and could result in serious injury. Only use the specific ground point, do not use any other exposed metal parts.

5. Start the engine in the vehicle that has the booster battery, let the engine idle a few minutes, and then start the engine in the vehicle with the discharged battery.
6. Once the engine is started, remove the jumper cables in the reverse sequence:

Disconnecting The Jumper Cables

1. Disconnect the negative **(-)** end of the jumper cable from the engine ground of the vehicle with the discharged battery.
2. Disconnect the opposite end of the negative **(-)** jumper cable from the negative **(-)** post of the booster battery.
3. Disconnect the positive **(+)** end of the jumper cable from the positive **(+)** post of the booster battery.
4. Disconnect the opposite end of the positive **(+)** jumper cable from the positive **(+)** post of the vehicle with the discharged battery.

If frequent jump starting is required to start your vehicle you should have the battery and charging system inspected at your authorized dealer.

CAUTION!

Accessories plugged into the vehicle power outlets draw power from the vehicle's battery, even when not in use (i.e., cellular devices, etc.). Eventually, if plugged in long enough without engine operation, the vehicle's battery will discharge sufficiently to degrade battery life and/or prevent the engine from starting.

Enhanced Accident Response System

In the event of an impact, if the communication network remains intact, and the power remains intact, depending on the nature of the event, the ORC will determine whether to have the Enhanced Accident Response System perform the following functions:

- Cut off fuel to the engine.
- Flash hazard lights as long as the battery has power or until the ignition is placed in the “OFF” position. The hazard lights flasher can be deactivated by pressing the hazard flasher button.
- Turn on the interior lights, which remain on as long as the battery has power or for 15 minutes from the intervention of the Enhanced Accident Response System.
- Unlock the doors automatically.
- Turn off the Fuel Pump Heater.
- Turn Off the HVAC Blower Motor.
- Close the HVAC Circulation Door.

System Reset Procedure

Depending on the nature of the event the left and right turn signal lights, located in the instrument panel, may both be blinking and will continue to blink until the ignition switch is turned to the OFF position. After an accident, turn the ignition switch to STOP/OFF position, check that there aren’t any losses of fuel/liquids. In order to move your vehicle to the side of the road, you must follow the system reset procedure.

Customer Action	Customer Will See
1. Turn ignition OFF. (Turn Signal Switch Must be placed in Neutral State).	
2. Turn ignition ON.	Left Turn Light is OFF. Right Turn Light BLINKS.
3. Turn Right Turn Signal Switch ON.	Right Turn Light is ON SOLID. Left Turn Light BLINKS.
4. Turn Left Turn Signal Switch ON.	Left Turn Light is ON SOLID. Right Turn Light BLINKS.
5. Turn Right Turn Signal Switch ON.	Right Turn Light is ON SOLID. Left Turn Light BLINKS.
6. Turn Left Turn Signal Switch ON.	Left Turn Light is ON SOLID. Right Turn Light is ON SOLID.
7. Turn Left Turn Signal Switch OFF. (Turn Signal Switch Must be placed in Neutral State).	Left Turn Light is OFF. Right Turn Light is OFF.
8. Turn ignition OFF.	
9. Turn Hazard Flashers OFF (Manually).	System is now reset and the engine may be started.

If a reset procedure step is not completed within 60 seconds, then the turn signal lights will turn off and the reset procedure must be performed again in order to be successful.

REFUELING IN EMERGENCY

The fuel filling procedure in case of emergency is described in the "Emergency Refueling Procedure". Refer to "Adding Fuel" in "Starting And Operating" for further information.

IF YOUR ENGINE OVERHEATS

In any of the following situations, you can reduce the potential for overheating your engine by taking the appropriate action.

- On the highways — slow down.
- In city traffic — while stopped, put transmission in NEUTRAL, but do not increase engine idle speed.

CAUTION!

Driving with a hot cooling system could damage your vehicle. If the temperature gauge reads "H," pull over and stop the vehicle. Idle the vehicle with the air conditioner turned off until the pointer drops back into the normal range. If the pointer remains on the "H" and you hear continuous chimes, turn the engine off immediately and call for service.

NOTE: There are steps that you can take to slow down an impending overheat condition:

- If your air conditioner (A/C) is on, turn it off. The A/C system adds heat to the engine cooling system and turning the A/C off can help remove this heat.

- You can also turn the temperature control to maximum heat, the mode control to floor and the blower control to high. This allows the heater core to act as a supplement to the radiator and aids in removing heat from the engine cooling system.

WARNING!

You or others can be badly burned by hot engine coolant (antifreeze) or steam from your radiator. If you see or hear steam coming from under the hood, do not open the hood until the radiator has had time to cool. Never try to open a cooling system pressure cap when the radiator or coolant bottle is hot.

SHIFT LEVER OVERRIDE

If a malfunction occurs and the shift lever cannot be moved out of the PARK position, you can use the following procedure to temporarily move the shift lever:

1. Turn the engine OFF.
2. Apply the Electric Park Brake.

3. Carefully separate the shift lever bezel and boot assembly from the center console.

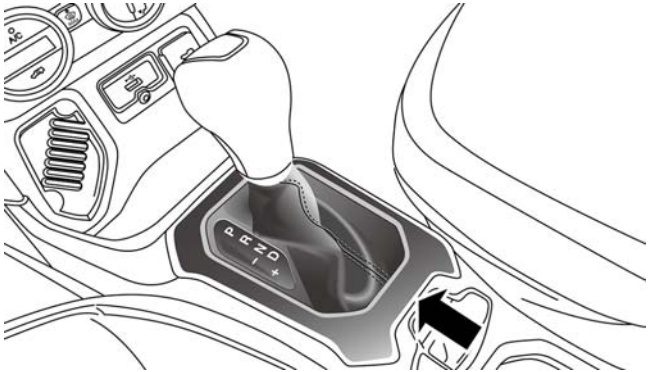

Shift Lever Bezel Location

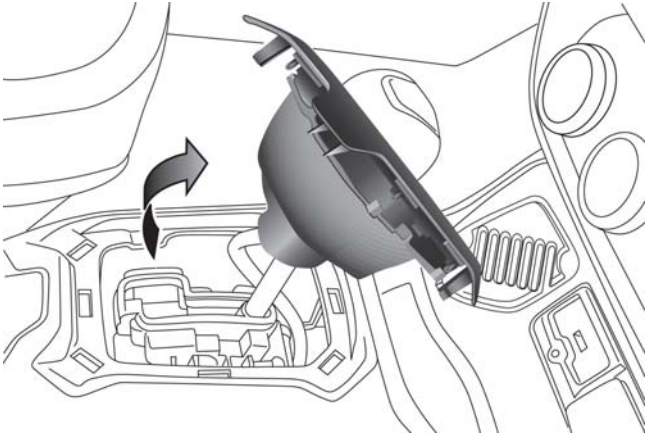

Removing Shift Lever Bezel

4. Press and maintain firm pressure on the brake pedal.

5. Insert a small screwdriver or similar tool down into the shift lever override access hole (at the right front corner of the shift lever assembly), and push and hold the override release lever down.

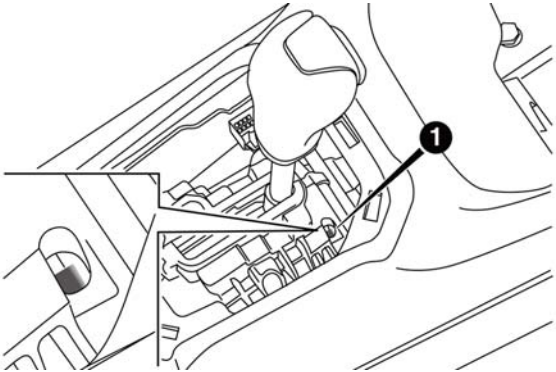

Shift Lever Override Location

1 — Shift Lever Opening

6. Move the shift lever to the NEUTRAL position.
7. The vehicle may then be started in NEUTRAL.
8. Reinstall the shift lever bezel.

IGNITION KEY REMOVAL OVERRIDE

This vehicle is equipped with a Key Ignition Park Interlock which requires the transmission to be in PARK before the ignition switch can be turned to the STOP/OFF (key removal) position. To remove the key manually, proceed as follows:

1. Make sure the vehicle is in a safe location and set the Electric Park Brake.
2. Unlock the steering column, and pull the tilt/telescoping control handle down.
3. Pull the steering wheel outward until it is in the end of the travel position, then lock the steering column in position and push the control handle up until fully engaged.

4. Using the special tool supplied (located in the tool bag), remove the screws in the lower steering column trim cover and remove it.

Special Tool

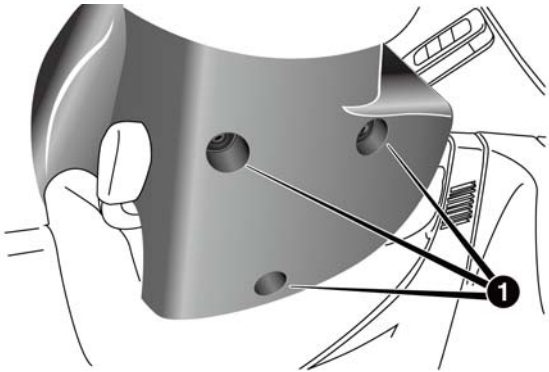

Lower Steering Column Cover

1 — Trim Screws

5. With one hand, pull down on the release tab and with the other, pull out the ignition key.

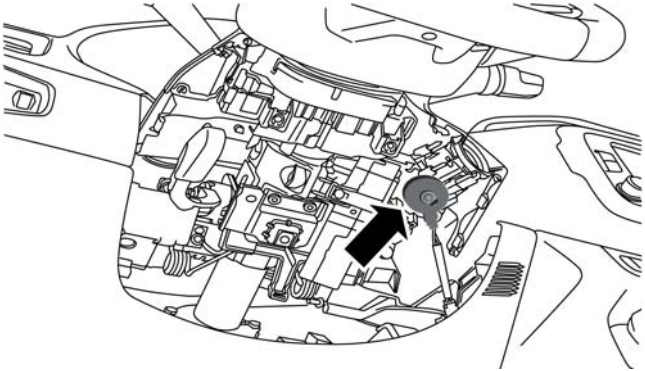

Release Tab Location

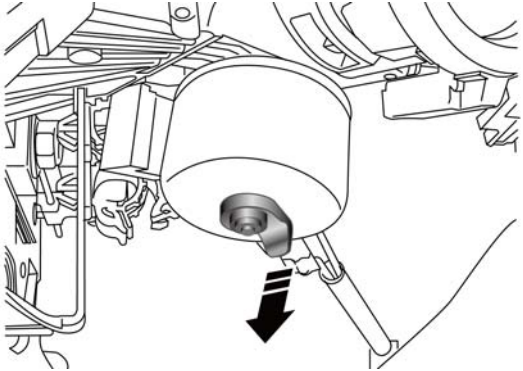

Release Tab Direction

6. Once the key is removed, reinstall the steering column cover.

FREEING A STUCK VEHICLE

If your vehicle becomes stuck in mud, sand or snow, it can often be moved using a rocking motion. Turn the steering wheel right and left to clear the area around the front wheels. For vehicles with automatic transmission, push and hold the lock button on the shift lever. Then shift back and forth between DRIVE and REVERSE (with automatic transmission) or 2ND GEAR and REVERSE (with manual transmission), while gently pressing the accelerator.

Use the least amount of accelerator pedal pressure that will maintain the rocking motion without spinning the wheels or racing the engine.

For Vehicles With Automatic Transmission:

Shifts between DRIVE and REVERSE can only be achieved at wheel speeds of 5 mph (8 km/h) or less. Whenever the transmission remains in NEUTRAL for more than two seconds, you must press the brake pedal to engage DRIVE or REVERSE.

NOTE: Push the "ESC Off" switch (if necessary), to place the Electronic Stability Control (ESC) system in "Partial Off" mode, before rocking the vehicle. Refer to "Electronic Brake Control" in "Starting And Operating" for further information. Once the vehicle has been freed, push the "ESC Off" switch again to restore "ESC On" mode.

CAUTION!

- Racing the engine or spinning the wheels may lead to transmission overheating and failure. Allow the engine to idle with the transmission in NEUTRAL for at least one minute after every five rocking-motion cycles. This will minimize overheating and reduce the risk of clutch or transmission failure during prolonged efforts to free a stuck vehicle.
- When "rocking" a stuck vehicle by shifting between DRIVE/2nd gear and REVERSE, do not spin the wheels faster than 15 mph (24 km/h), or drive-train damage may result.
- Revving the engine or spinning the wheels too fast may lead to transmission overheating and failure. It can also damage the tires. Do not spin the wheels above 30 mph (48 km/h) while in gear (no transmission shifting occurring).

WARNING!

Fast spinning tires can be dangerous. Forces generated by excessive wheel speeds may cause damage, or even failure, of the axle and tires. A tire could explode and injure someone. Do not spin your vehicle's wheels faster than 30 mph (48 km/h) or for longer than 30 seconds continuously without stopping when you are stuck and do not let anyone near a spinning wheel, no matter what the speed.

TOWING A DISABLED VEHICLE

This section describes procedures for towing a disabled vehicle using a commercial towing service.

		FWD MODELS		FOUR WHEEL DRIVE
Towing Condition	**Wheels OFF the Ground**	**AUTOMATIC TRANSMISSION**	**MANUAL TRANSMISSION**	**AUTOMATIC/MANUAL TRANSMISSION 4X4**
Flat Tow	NONE	**NOT ALLOWED**	**NOT ALLOWED**	**NOT ALLOWED**
Wheel Lift or Dolly Tow	Rear	**NOT ALLOWED**	**NOT ALLOWED**	**NOT ALLOWED**
	Front	OK	OK	**NOT ALLOWED**
Flatbed	**ALL**	**BEST METHOD**	**BEST METHOD**	**OK**

Proper towing or lifting equipment is required to prevent damage to your vehicle. Use only tow bars and other equipment designed for this purpose, following equipment manufacturer's instructions. Use of safety chains is mandatory. Attach a tow bar or other towing device to main structural members of the vehicle, not to bumpers or associated brackets. State and local laws regarding vehicles under tow must be observed.

NOTE:

- Vehicles with a discharged battery or total electrical failure when the Electric Park Brake (EPB) is engaged, will need a wheel dolly or jack to raise the rear wheels off the ground when moving the vehicle onto a flatbed.
- You must ensure that the Auto Park Brake feature is disabled before towing this vehicle, to avoid inadvertent Electric Park Brake engagement. The Auto Park Brake feature is enabled or disabled via the customer programmable features in the Uconnect Settings.

If you must use the accessories (wipers, defrosters, etc.) while being towed, the ignition must be in the MAR/RUN position. If the key fob is unavailable, or the vehicle's battery is discharged, refer to "Shift Lever Override" in this section for instructions on shifting the transmission out of PARK so that the vehicle can be moved.

CAUTION!

- **Do not use sling type equipment when towing. Vehicle damage may occur.**
- **When securing the vehicle to a flat bed truck, do not attach to front or rear suspension components. Damage to your vehicle may result from improper towing.**

Front Wheel Drive (FWD)

The manufacturer recommends towing your vehicle with all four wheels OFF the ground on a flatbed.

If flatbed equipment is not available, this vehicle must towed with the front wheels OFF the ground (using a towing dolly, or wheel lift equipment with the front wheels raised).

NOTE: Ensure that the Electric Park Brake is released, and remains released, while being towed.

CAUTION!

Towing this vehicle in violation of the above requirements can cause severe transmission damage. Damage from improper towing is not covered under the New Vehicle Limited Warranty.

Four-Wheel Drive (4WD)

The manufacturer requires towing with all four wheels OFF the ground. Acceptable methods are to tow the vehicle on a flatbed, or with one end of the vehicle raised and the opposite end on a towing dolly.

CAUTION!

- **DO NOT tow this vehicle with ANY of its wheels on the ground. Damage to the drivetrain will result.**
- **Front or rear wheel lifts must not be used. Internal damage to the transmission or power transfer unit will occur if a front or rear wheel lift is used when towing.**
- **Towing this vehicle in violation of the above requirements can cause severe transmission and/or power transfer unit damage. Damage from improper towing is not covered under the New Vehicle Limited Warranty.**

EMERGENCY TOW HOOKS — IF EQUIPPED

If your vehicle is equipped with tow hooks, there will be one in the rear and two mounted on the front of the vehicle. The rear hook will be located on the driver's side of the vehicle.

NOTE: For off-road recovery, it is recommended to use both of the front tow hooks to minimize the risk of damage to the vehicle.

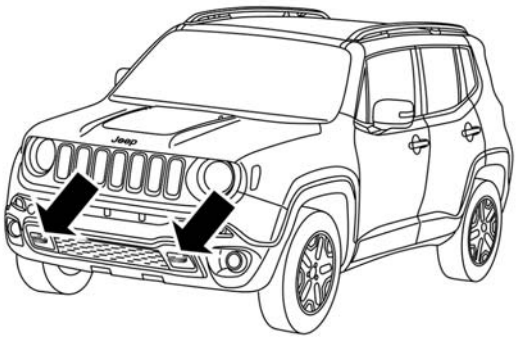

Front Tow Hook Locations

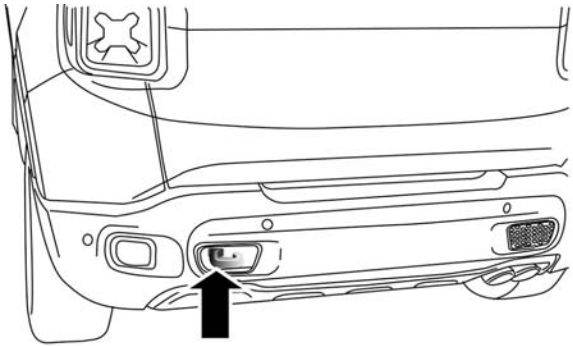

Rear Tow Hook Location

Vehicles Equipped With RKE Transmitter With An Integrated Vehicle Key

Turn the ignition key to the MAR/RUN and then STOP/OFF position, without removing it. By extracting the key this will automatically engage the steering wheel lock. Place the transmission into NEUTRAL.

Vehicles With Keyless Enter-N-Go

Place the ignition in the RUN and subsequently on STOP, without opening the door. During towing remember that not having the aid of the power brakes and the electro-mechanical power steering, greater force is needed in applying the brakes and steering of the vehicle.

WARNING!

- **Do not use a chain for freeing a stuck vehicle. Chains may break, causing serious injury or death.**
- **Stand clear of vehicles when pulling with tow hooks. Tow straps may become disengaged, causing serious injury.**

CAUTION!

Tow hooks are for emergency use only, to rescue a vehicle stranded off road. Do not use tow hooks for tow truck hookup or highway towing. You could damage your vehicle.

MAINTAINING AND CARING FOR YOUR VEHICLE

CONTENTS

- EMISSIONS INSPECTION AND MAINTENANCE PROGRAMS 522
- REPLACEMENT PARTS 523
- DEALER SERVICE 523
- MAINTENANCE SCHEDULE 524
  - Maintenance Chart. 526
- ENGINE COMPARTMENT — 1.4L TURBO ENGINE 533
- ENGINE COMPARTMENT — 2.4L ENGINE. . . .534
- MAINTENANCE PROCEDURES 535
  - Engine Oil 535
  - Engine Oil Filter 538
  - Engine Air Cleaner Filter 539
  - Maintenance-Free Battery 539
  - Air Conditioner Maintenance 540
  - Body Lubrication 542
  - Wiper Blades 542

- Adding Washer Fluid 545
- Exhaust System 545
- Cooling System 547
- Brake System 553
- Manual Transmission — If Equipped 555
- Automatic Transmission — If Equipped 556
- Appearance Care And Protection From Corrosion 558

■ LIFTING A VEHICLE 565

■ TIRE SAFETY INFORMATION 567

- Tire Markings 567
- Tire Identification Number (TIN). 570
- Tire Terminology And Definitions 572
- Tire Loading And Tire Pressure 573

■ TIRES — GENERAL INFORMATION 578

- Tire Pressure 578
- Tire Inflation Pressures 580
- Tire Pressures For High Speed Operation 581
- Radial Ply Tires 582
- Tire Types. 582
- Run Flat Tires — If Equipped 584
- Spare Tires — If Equipped 585
- Tire Spinning 585
- Tread Wear Indicators 586
- Life Of Tire 586
- Replacement Tires 587

■ TIRE CHAINS (TRACTION DEVICES) 589
■ TIRE ROTATION RECOMMENDATIONS 590
■ STORING THE VEHICLE 592

EMISSIONS INSPECTION AND MAINTENANCE PROGRAMS

In some localities, it may be a legal requirement to pass an inspection of your vehicle's emissions control system. Failure to pass could prevent vehicle registration.

For states that require an Inspection and Maintenance (I/M), this check verifies the "Malfunction Indicator Light (MIL)" is functioning and is not on when the engine is running, and that the OBD II system is ready for testing.

Normally, the OBD II system will be ready. The OBD II system may **not** be ready if your vehicle was recently serviced, recently had a dead battery or a battery replacement. If the OBD II system should be determined not ready for the I/M test, your vehicle may fail the test.

Your vehicle has a simple ignition actuated test, which you can use prior to going to the test station. To check if your vehicle's OBD II system is ready, you must do the following:

1. Cycle the ignition switch to the ON position, but do not crank or start the engine.

NOTE: If you crank or start the engine, you will have to start this test over.

2. As soon as you cycle the ignition switch to the ON position, you will see the Malfunction Indicator Light (MIL) symbol come on as part of a normal bulb check.
3. Approximately 15 seconds later, one of two things will happen:

- The MIL will flash for about 10 seconds and then return to being fully illuminated until you turn OFF the ignition or start the engine. This means that your vehicle's OBD II system is **not ready** and you should **not** proceed to the I/M station.

- The MIL will not flash at all and will remain fully illuminated until you place the ignition in the off position or start the engine. This means that your vehicle's OBD II system is **ready** and you can proceed to the I/M station.

If your OBD II system is **not ready,** you should see your authorized dealer or repair facility. If your vehicle was recently serviced or had a battery failure or replacement, you may need to do nothing more than drive your vehicle as you normally would in order for your OBD II system to update. A recheck with the above test routine may then indicate that the system is **now ready**.

Regardless of whether your vehicle's OBD II system is ready or not, if the MIL is illuminated during normal vehicle operation you should have your vehicle serviced before going to the I/M station. The I/M station can fail your vehicle because the MIL is on with the engine running.

REPLACEMENT PARTS

Use of genuine parts for normal/scheduled maintenance and repairs is highly recommended to ensure the designed performance. Damage or failures caused by the use of parts which are not quality-equivalent to genuine parts for maintenance and repairs will not be covered by the manufacturer's warranty.

DEALER SERVICE

Your authorized dealer has the qualified service personnel, special tools, and equipment to perform all service operations in an expert manner. Service Manuals are available which include detailed service information for your vehicle. Refer to these Service Manuals before attempting any procedure yourself.

NOTE: Intentional tampering with emissions control systems may void your warranty and could result in civil penalties being assessed against you.

WARNING!

You can be badly injured working on or around a motor vehicle. Only do service work for which you have the knowledge and the proper equipment. If you have any doubt about your ability to perform a service job, take your vehicle to a competent mechanic.

MAINTENANCE SCHEDULE

Your vehicle is equipped with an automatic oil change indicator system. The oil change indicator system will remind you that it is time to take your vehicle in for scheduled maintenance.

Based on engine operation conditions, the oil change indicator message will illuminate in the instrument cluster. This means that service is required for your vehicle. Operating conditions such as frequent short-trips, trailer tow and extremely hot or cold ambient temperatures will influence when the "Change Oil" or "Oil Change Required" message is displayed. Severe Operating Conditions can cause the change oil message to illuminate as early as 3,500 miles (5,600 km) since last reset. Have your vehicle serviced as soon as possible, within the next 500 miles (805 km).

Your authorized dealer will reset the oil change indicator message after completing the scheduled oil change. If a scheduled oil change is performed by someone other than your authorized dealer, the message can be reset by referring to the steps described under "Electronic Vehicle Information Center (EVIC)/Driver Information Display (DID)" in "Getting To Know Your Instrument Panel" for further information.

NOTE: Under no circumstances should oil change intervals exceed 10,000 miles (16,000 km), one year or 350 hours of engine run time, whichever comes first. The 350 hours of engine run or idle time is generally only a concern for fleet customers.

Severe Duty All Models

Change Engine Oil at 4,000 miles (6,500 km) if the vehicle is operated in a dusty and off road environment or is operated predominately at idle or only very low engine RPM's. This type of vehicle use is considered Severe Duty.

NOTE: The Oil Change Indicator will not illuminate under these conditions.

Once A Month Or Before A Long Trip:

- Check engine oil level.
- Check windshield washer fluid level.
- Check the tire inflation pressures and look for unusual wear or damage.
- Check the fluid levels of the coolant reservoir, and brake master cylinder reservoir, and fill as needed.
- Check function of all interior and exterior lights.

Required Maintenance Intervals.

At Every Oil Change Interval As Indicated By Oil Change Indicator System:
Change oil and filter.
Inspect battery and clean and tighten terminals as required.
Inspect brake pads, shoes, rotors, drums, and hoses.
Inspect engine cooling system protection and hoses.
Check and adjust hand brake.
Inspect exhaust system.
Inspect engine air filter if using in dusty or off-road conditions.

Refer to the "Maintenance Chart" on the following page for the required maintenance intervals.

Maintenance Chart

Mileage or time passed (whichever comes first)	10,000	20,000	30,000	40,000	50,000	60,000	70,000	80,000	90,000	100,000	110,000	120,000	130,000	140,000	150,000
Years	1	2	3	4	5	6	7	8	9	10	11	12	13	14	15
Or Kilometers	16,000	32,000	48,000	64,000	80,000	96,000	112,000	128,000	144,000	160,000	176,000	192,000	208,000	224,000	240,000
Check tire condition/wear and adjust pressure, if necessary, check TIREKIT expiration date (if provided).	•	•	•	•	•	•	•	•	•	•	•	•	•	•	•
Check operation of lighting system (headlamps, direction indicators, hazard warning lights, luggage compartment, passenger compartment, glove compartment, instrument panel warning lights, etc.).	•	•	•	•	•	•	•	•	•	•	•	•	•	•	•
Check and, if necessary, top up fluid levels (brakes/hydraulic clutch, windshield washer, battery, engine coolant, etc.).	•	•	•	•	•	•	•	•	•	•	•	•	•	•	•

Mileage or time passed (whichever comes first)	10,000	20,000	30,000	40,000	50,000	60,000	70,000	80,000	90,000	100,000	110,000	120,000	130,000	140,000	150,000
Years	1	2	3	4	5	6	7	8	9	10	11	12	13	14	15
Or Kilometers	16,000	32,000	48,000	64,000	80,000	96,000	112,000	128,000	144,000	160,000	176,000	192,000	208,000	224,000	240,000
Check engine control system operation (via diagnostic tool).	•	•	•	•	•	•	•	•	•	•	•	•	•	•	•
Visually inspect condition of: exterior bodywork, underbody protection, pipes and hoses (exhaust - fuel system - brakes), rubber elements (boots, sleeves, bushings, etc.).		•		•		•		•		•		•		•	
Check windshield/rear window wiper blade position/wear.	•		•		•		•		•		•		•		•
Check operation of windshield washer system and adjust jets if necessary.	•		•		•		•		•		•		•		•

Mileage or time passed (whichever comes first)	10,000	20,000	30,000	40,000	50,000	60,000	70,000	80,000	90,000	100,000	110,000	120,000	130,000	140,000	150,000
Years	1	2	3	4	5	6	7	8	9	10	11	12	13	14	15
Or Kilometers	16,000	32,000	48,000	64,000	80,000	96,000	112,000	128,000	144,000	160,000	176,000	192,000	208,000	224,000	240,000
Check cleanliness of hood and tailgate locks and cleanliness and lubrication of linkages.	•		•		•		•		•		•		•		•
Visually check the condition and wear of the front and rear brakes.	•	•	•	•	•	•	•	•	•	•	•	•	•	•	•
Check the front suspension, tie rods, CV joints and replace if necessary.		•		•		•		•		•		•		•	
Visual inspect the condition of the accessory drive belt.				•				•				•			
Check the tension of the accessory drive belt.		•		•		•		•		•		•		•	

Mileage or time passed (whichever comes first)	10,000	20,000	30,000	40,000	50,000	60,000	70,000	80,000	90,000	100,000	110,000	120,000	130,000	140,000	150,000
Years	1	2	3	4	5	6	7	8	9	10	11	12	13	14	15
Or Kilometers	16,000	32,000	48,000	64,000	80,000	96,000	112,000	128,000	144,000	160,000	176,000	192,000	208,000	224,000	240,000
Replace the accessory drive belt.															•
Inspect and replace PCV valve if necessary.										•					
Change engine oil and replace oil filter (*).															
Inspect the PTU fluid level.				•				•				•			
Inspect the rear differential fluid level.				•				•				•			
Replace spark plugs (1.4L Turbo engine). (**)			•			•			•			•			•
Replace spark plugs (2.4L engine). (**)										•					
Replace engine air filter. (#)			•			•			•			•			•

Mileage or time passed (whichever comes first)	10,000	20,000	30,000	40,000	50,000	60,000	70,000	80,000	90,000	100,000	110,000	120,000	130,000	140,000	150,000
Years	1	2	3	4	5	6	7	8	9	10	11	12	13	14	15
Or Kilometers	16,000	32,000	48,000	64,000	80,000	96,000	112,000	128,000	144,000	160,000	176,000	192,000	208,000	224,000	240,000
Replace brake fluid every two years.		•		•		•		•		•		•		•	
Replace cabin filter.	○	•	○	•	○	•	○	•	○	•	○	•	○	•	○
Change the manual transmission fluid if using your vehicle for any of the following: trailer towing, heavy loading, taxi, police, delivery service (commercial service), off-road, desert operation or more than 50% of your driving is at sustained speeds during hot weather, above 90°F (32°C).					•										•
Flush and replace the engine coolant at 10 years or 150,000 miles (240,000 km) whichever comes first.										•					•

Mileage or time passed (whichever comes first)	10,000	20,000	30,000	40,000	50,000	60,000	70,000	80,000	90,000	100,000	110,000	120,000	130,000	140,000	150,000
Years	1	2	3	4	5	6	7	8	9	10	11	12	13	14	15
Or Kilometers	16,000	32,000	48,000	64,000	80,000	96,000	112,000	128,000	144,000	160,000	176,000	192,000	208,000	224,000	240,000
Replace the timing belt (1.4L Turbo Engine).															•

○ Recommend replacement

• Mandatory service

(#) The engine air cleaner should be inspected at every oil change if used in dusty areas.

(*) The oil and oil filter replacement must be carried out when indicated by a warning light or message on the instrument panel, or in any case should not exceed 1 year or 10,000 miles (16,000 km).

(**) The spark plug change is distance based only, yearly intervals do not apply. The following are essential to ensure correct operation and prevent serious damage to the engine:

- Only use spark plugs of the same make and type which are specially certified for such engines (refer to “Engine Information” in “Technical Data” for further information).

- Strictly comply with the spark plug replacement interval given in the "Maintenance Schedule" for spark plug replacement.
- Contact your authorized dealer if you have any questions.

WARNING!

- **You can be badly injured working on or around a motor vehicle. Do only service work for which you have the knowledge and the right equipment. If you have any doubt about your ability to perform a service job, take your vehicle to a competent mechanic.**
- **Failure to properly inspect and maintain your vehicle could result in a component malfunction and effect vehicle handling and performance. This could cause an accident.**

ENGINE COMPARTMENT — 1.4L TURBO ENGINE

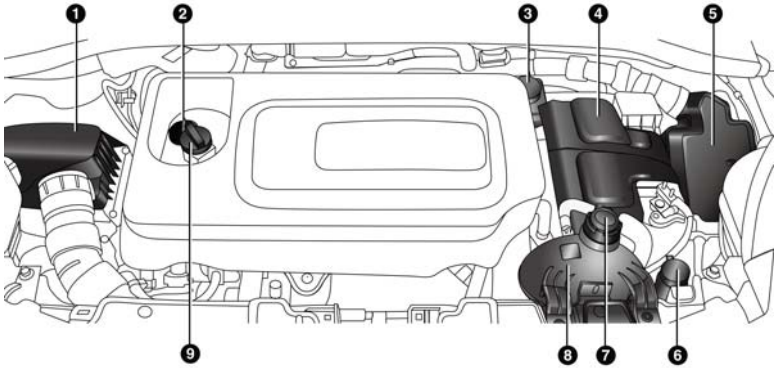

1 — Air Cleaner Filter
2 — Engine Oil Dipstick
3 — Brake Fluid Reservoir
4 — Battery
5 — Power Distribution Center (Fuses)
6 — Washer Fluid Reservoir
7 — Coolant Pressure Cap
8 — Coolant Pressure Bottle
9 — Oil Fill Cap

ENGINE COMPARTMENT — 2.4L ENGINE

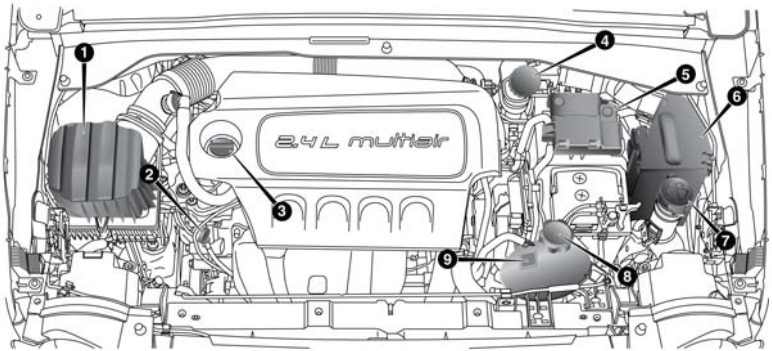

1 — Engine Air Cleaner Filter
2 — Engine Oil Dipstick
3 — Engine Oil Fill Cap
4 — Brake Fluid Reservoir
5 — Battery
6 — Power Distribution Center (Fuses)
7 — Washer Fluid Reservoir
8 — Coolant Pressure Cap
9 — Coolant Pressure Bottle

MAINTENANCE PROCEDURES

The pages that follow contain the **required** maintenance services determined by the engineers who designed your vehicle.

Besides those maintenance items specified in the fixed maintenance schedule, there are other components which may require servicing or replacement in the future.

CAUTION!

- **Failure to properly maintain your vehicle or perform repairs and service when necessary could result in more costly repairs, damage to other components or negatively impact vehicle performance. Immediately have potential malfunctions examined by an authorized dealer or qualified repair center.**

(Continued)

CAUTION! *(Continued)*

- **Your vehicle has been built with improved fluids that protect the performance and durability of your vehicle and also allow extended maintenance intervals. Do not use chemical flushes in these components as the chemicals can damage your engine, transmission, or air conditioning. Such damage is not covered by the New Vehicle Limited Warranty. If a flush is needed because of component malfunction, use only the specified fluid for the flushing procedure.**

Engine Oil

Checking Oil Level

To assure proper engine lubrication, the engine oil must be maintained at the correct level. Check the oil level at regular intervals, such as every fuel stop. The best time to check the engine oil level is approximately five minutes

after a fully warmed engine is shut off. Do not check oil level before starting the engine after it has sat overnight. Checking engine oil level when the engine is cold will give you an incorrect reading.

Checking the oil while the vehicle is on level ground, and approximately five minutes after a fully warmed engine is shut off, will improve the accuracy of the oil level readings. Maintain the oil level between the range markings on the dipstick. The safe range is indicated by a crosshatch zone. Adding 1 quart (0.9 Liters) of oil when the reading is at the low end of the indicated range will result in the oil level at the full end of the indicator range.

CAUTION!

Do not overfill the engine with oil. Overfilling the engine with oil will cause oil aeration, which can lead to loss of oil pressure and an increase in oil

(Continued)

CAUTION! *(Continued)*

temperature. This loss of oil pressure and increased oil temperature could damage your engine.

Change Engine Oil

The oil change indicator system will remind you that it is time to take your vehicle in for scheduled maintenance. Refer to the "Maintenance Schedule" for further information.

NOTE: Under no circumstances should oil change intervals exceed 10,000 miles (16,000 km), twelve months or 350 hours of engine run time, whichever comes first. The 350 hours of engine run or idle time is generally only a concern for fleet customers.

Engine Oil Selection — 1.4L Turbo Engine

For best performance and maximum protection for turbocharged engines under all types of operating conditions, the manufacturer recommends synthetic engine oils that are API Certified and meet the requirements of FCA Material Standard MS-12991.

Engine Oil Selection — 2.4L Engine

For best performance and maximum protection under all types of operating conditions, the manufacturer only recommends 0W-20 engine oils that are API Certified and meet the requirements of FCA Material Standard MS-6395.

Engine Oil Viscosity (SAE Grade) — 1.4L Turbo Engine

MOPAR SAE 5W-40 synthetic engine oil approved to FCA Material Standard MS-12991 such as Pennzoil, Shell Helix or equivalent is recommended for all operating temperatures. This engine oil improves low temperature starting and vehicle fuel economy.

The engine oil filler cap also shows the recommended engine oil viscosity for your engine. For information on engine oil filler cap location, refer to “Engine Compartment” in this section.

Lubricants which do not have both the engine oil certification mark and the correct SAE viscosity grade number should not be used.

Engine Oil Viscosity (SAE Grade) — 2.4L Engine

MOPAR SAE 0W-20 engine oil approved to FCA Material Standard MS-6395 such as Pennzoil, Shell Helix or equivalent is recommended for all operating temperatures. This engine oil improves low temperature starting and vehicle fuel economy.

The engine oil filler cap also shows the recommended engine oil viscosity for your engine. For information on engine oil filler cap location, refer to "Engine Compartment" in this section.

Lubricants which do not have both the engine oil certification mark and the correct SAE viscosity grade number should not be used.

Materials Added To Engine Oil

The manufacturer strongly recommends against the addition of any additives (other than leak detection dyes) to the engine oil. Engine oil is an engineered product and its performance may be impaired by supplemental additives.

Disposing Of Used Engine Oil And Oil Filters

Care should be taken in disposing of used engine oil and oil filters from your vehicle. Used oil and oil filters, indiscriminately discarded, can present a problem to the environment. Contact your authorized dealer, service station or governmental agency for advice on how and where used oil and oil filters can be safely discarded in your area.

Engine Oil Filter

The engine oil filter should be replaced with a new filter at every engine oil change.

Engine Oil Filter Selection

This manufacturer's engines have a full-flow type disposable oil filter. Use a filter of this type for replacement. The quality of replacement filters varies considerably. Only high quality filters should be used to assure most efficient service. MOPAR engine oil filters are high quality oil filters and are recommended.

Engine Air Cleaner Filter

Refer to the "Maintenance Schedule" in the "Maintenance Schedules" section for the proper maintenance intervals.

WARNING!

The air induction system (air cleaner, hoses, etc.) can provide a measure of protection in the case of engine backfire. Do not remove the air induction system (air cleaner, hoses, etc.) unless such removal is necessary for repair or maintenance. Make sure that no one is near the engine compartment before starting the vehicle with the air induction system (air cleaner, hoses, etc.) removed. Failure to do so can result in serious personal injury.

Engine Air Cleaner Filter Selection

The quality of replacement engine air cleaner filters varies considerably. Only high quality filters should be used to assure most efficient service. MOPAR engine air cleaner filters are a high quality filter and are recommended.

Maintenance-Free Battery

Your vehicle is equipped with a maintenance-free battery. You will never have to add water, nor is periodic maintenance required.

WARNING!

- **Battery fluid is a corrosive acid solution and can burn or even blind you. Do not allow battery fluid to contact your eyes, skin, or clothing. Do not lean over a battery when attaching clamps. If acid**

(Continued)

WARNING! *(Continued)*

splashes in eyes or on skin, flush the area immediately with large amounts of water. Refer to "Jump-Starting Procedures" in the "In Case Of Emergencies" section for further information.

- **Battery gas is flammable and explosive. Keep flame or sparks away from the battery. Do not use a booster battery or any other booster source with an output greater than 12 Volts. Do not allow cable clamps to touch each other.**
- **Battery posts, terminals, and related accessories contain lead and lead compounds. Wash hands after handling.**
- **The battery in this vehicle has a vent hose that should not be disconnected and should only be replaced with a battery of the same type (vented).**

CAUTION!

- **It is essential when replacing the cables on the battery that the positive cable is attached to the positive post and the negative cable is attached to the negative post. Battery posts are marked positive (+) and negative (-) and are identified on the battery case. Cable clamps should be tight on the terminal posts and free of corrosion.**
- **If a "fast charger" is used while the battery is in the vehicle, disconnect both vehicle battery cables before connecting the charger to the battery. Do not use a "fast charger" to provide starting voltage.**

Air Conditioner Maintenance

For best possible performance, your air conditioner should be checked and serviced by an authorized dealer at the start of each warm season. This service should include

cleaning of the condenser fins and a performance test. Drive belt tension should also be checked at this time.

WARNING!

- **Use only refrigerants and compressor lubricants approved by the manufacturer for your air conditioning system. Some unapproved refrigerants are flammable and can explode, injuring you. Other unapproved refrigerants or lubricants can cause the system to fail, requiring costly repairs. Refer to Warranty Information Book, located on the DVD, for further warranty information.**
- **The air conditioning system contains refrigerant under high pressure. To avoid risk of personal injury or damage to the system, adding refrigerant or any repair requiring lines to be disconnected should be done by an experienced technician.**

CAUTION!

Do not use chemical flushes in your air conditioning system as the chemicals can damage your air conditioning components. Such damage is not covered by the New Vehicle Limited Warranty.

Refrigerant Recovery And Recycling HFO 1234yf

HFO 1234yf Air Conditioning Refrigerant is a hydrofluoolefine HFO that is endorsed by the Environmental Protection Agency and is an ozone-saving product. The manufacturer recommends that air conditioning service be performed by authorized dealer using recovery and recycling equipment.

NOTE: Use only manufacturer approved A/C system PAG compressor oil, and refrigerants.

A/C Air Filter

See your Authorized Dealer for service.

Body Lubrication

Locks and all body pivot points, including such items as seat tracks, door hinge pivot points and rollers, liftgate, tailgate, decklid, sliding doors and hood hinges, should be lubricated periodically with a lithium based grease, such as MOPAR Spray White Lube to assure quiet, easy operation and to protect against rust and wear. Prior to the application of any lubricant, the parts concerned should be wiped clean to remove dust and grit; after lubricating excess oil and grease should be removed. Particular attention should also be given to hood latching components to ensure proper function. When performing other underhood services, the hood latch, release mechanism and safety catch should be cleaned and lubricated.

The external lock cylinders should be lubricated twice a year, preferably in the Fall and Spring. Apply a small amount of a high quality lubricant, such as MOPAR Lock Cylinder Lubricant directly into the lock cylinder.

Wiper Blades

Clean the rubber edges of the wiper blades and the windshield and rear window periodically with a sponge or soft cloth and a mild nonabrasive cleaner. This will remove accumulations of salt, waxes, or road film, and help reduce streaking and smearing.

Operation of the wipers on dry glass for long periods may cause deterioration of the wiper blades. Always use washer fluid when using the wipers to remove salt or dirt from a dry windshield or rear window.

Avoid using the wiper blades to remove frost or ice from the windshield or rear window. Make sure that they are not frozen to the glass before turning them on to avoid damaging the blade. Keep the wiper blade out of contact with petroleum products such as engine oil, gasoline, etc.

NOTE: Life expectancy of wiper blades varies depending on geographical area and frequency of use. Poor performance of blades may be present with chattering, marks, water lines or wet spots. If any of these conditions are present, clean the wiper blades or replace as necessary.

Service Position Strategy

The service position allows the wiper blades to be placed in a position that allows the wiper blades to be easily changed.

To enable the Service Position Strategy the wipers must be in the Park position before placing the ignition in the STOP/OFF position.

Service mode must be activated within two minutes after the ignition is placed in the STOP/OFF position.

To have a correct activation of strategy, the Service Position command (antipanic) must be active for at least half a second.

At every valid activation of Service Position command, the wiper blades are activated for 250 ms.

The Service Position command can be repeated several times to bring the blades into the desired position, up to a maximum of three times.

After three subsequent activations the strategy is disabled.

Function Deactivation:

The functionality is reset if:

- Turn the ignition to the MAR/RUN position.
- Number of subsequent activations is three.
- Two minutes timer has expired after turning the ignition OFF.

NOTE: When turning the ignition ON, the blades will go into the parking position.

Front Wiper Blade Removal/Installation

1. Lift the front wiper arm upward to raise the wiper blade off of the windshield.
2. Push the release button on the arm of the wiper blade.
3. Push the wiper blade up the and remove it.

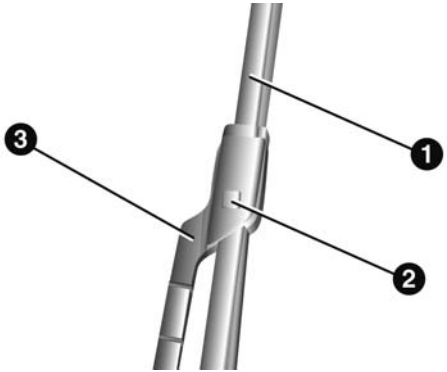

1 — Wiper Blade
2 — Release Button
3 — Wiper Arm

4. Install the wiper blade and firmly push the wiper blade until it snaps into place.

Rear Wiper Blade Removal/Installation

1. Carefully lift the rear wiper arm upward to raise the wiper blade off of the liftgate glass.
2. Grab and hold the wiper arm closest to the wiper blade end while pushing the wiper blade towards the liftgate glass to unsnap the blade pivot pin from the wiper blade holder on the wiper arm.
3. Install the wiper blade pivot pin into the wiper blade holder at the end of the wiper arm, and firmly push the wiper blade until it snaps into place.

Adding Washer Fluid

The windshield washer fluid reservoir is located in the engine compartment, and the fluid level should be checked at regular intervals. Fill the reservoir with windshield washer solvent (not engine coolant/ antifreeze). Refer to "Engine Compartment" in this section for further information.

WARNING!

Commercially available windshield washer solvents are flammable. They could ignite and burn you. Care must be exercised when filling or working around the washer solution.

Exhaust System

The best protection against carbon monoxide entry into the vehicle body is a properly maintained engine exhaust system.

If you notice a change in the sound of the exhaust system; or if the exhaust fumes can be detected inside the vehicle; or when the underside or rear of the vehicle is damaged; have an authorized technician inspect the complete exhaust system and adjacent body areas for broken, damaged, deteriorated, or mispositioned parts. Open seams or loose connections could permit exhaust fumes to seep into the passenger compartment. In addition, have the

exhaust system inspected each time the vehicle is raised for lubrication or oil change. Replace as required.

WARNING!

- **Exhaust gases can injure or kill. They contain carbon monoxide (CO), which is colorless and odorless. Breathing it can make you unconscious and can eventually poison you. To avoid breathing CO, refer to "Safety Tips/Exhaust Gas" in the "Safety" section for further information.**
- **A hot exhaust system can start a fire if you park over materials that can burn. Such materials might be grass or leaves coming into contact with your exhaust system. Do not park or operate your vehicle in areas where your exhaust system can contact anything that can burn.**

CAUTION!

- **The catalytic converter requires the use of unleaded fuel only. Leaded gasoline will destroy the effectiveness of the catalyst as an emissions control device and may seriously reduce engine performance and cause serious damage to the engine.**
- **Damage to the catalytic converter can result if your vehicle is not kept in proper operating condition. In the event of engine malfunction, particularly involving engine misfire or other apparent loss of performance, have your vehicle serviced promptly. Continued operation of your vehicle with a severe malfunction could cause the converter to overheat, resulting in possible damage to the converter and vehicle.**

Under normal operating conditions, the catalytic converter will not require maintenance. However, it is important to keep the engine properly tuned to assure proper catalyst operation and prevent possible catalyst damage.

NOTE: Intentional tampering with emissions control systems can result in civil penalties being assessed against you.

In unusual situations involving grossly malfunctioning engine operation, a scorching odor may suggest severe and abnormal catalyst overheating. If this occurs, stop the vehicle, turn off the engine and allow it to cool. Service, including a tune-up to manufacturer's specifications, should be obtained immediately.

To minimize the possibility of catalytic converter damage:

- Do not shut off the engine or interrupt the ignition, when the transmission is in gear and the vehicle is in motion.
- Do not try to start the engine by pushing or towing the vehicle.
- Do not idle the engine with any spark plug wires disconnected or removed, such as when diagnostic testing, or for prolonged periods during very rough idle or malfunctioning operating conditions.

Cooling System

WARNING!

- **When working near the radiator cooling fan, disconnect the fan motor lead or turn the ignition switch to the OFF position. The fan is temperature controlled and can start at any time the ignition switch is in the ON position.**

(Continued)

WARNING! *(Continued)*

- **You or others can be badly burned by hot engine coolant (antifreeze) or steam from your radiator. If you see or hear steam coming from under the hood, do not open the hood until the radiator has had time to cool. Never try to open a cooling system pressure cap when the radiator is hot.**

Coolant Checks

Check engine coolant (antifreeze) protection every 12 months (before the onset of freezing weather, where applicable). If the engine coolant (antifreeze) is dirty or rusty in appearance, the system should be drained, flushed and refilled with fresh engine coolant (antifreeze). Check the front of the A/C condenser for any accumulation of bugs, leaves, etc. If dirty, clean by gently spraying water from a garden hose vertically down the face of the condenser.

Cooling System — Drain, Flush And Refill

NOTE: Some vehicles require special tools to add coolant properly. Failure to fill these systems properly could lead to severe internal engine damage. If any coolant is needed to be added to the system please contact your local authorized dealer.

If the engine coolant (antifreeze) is dirty or contains visible sediment, have an authorized dealer clean and flush with OAT coolant (antifreeze) (conforming to MS.90032).

Refer to the “Maintenance Schedule” for the proper maintenance intervals.

Selection Of Coolant

Refer to “Fluids, Lubricants, And Genuine Parts” in the “Technical Data” section for further information.

CAUTION!

- **Mixing of engine coolant (antifreeze) other than specified Organic Additive Technology (OAT) engine coolant (antifreeze), may result in engine damage and may decrease corrosion protection. Organic Additive Technology (OAT) engine coolant is different and should not be mixed with Hybrid Organic Additive Technology (HOAT) engine coolant (antifreeze) or any "globally compatible" coolant (antifreeze). If a non-OAT engine coolant (antifreeze) is introduced into the cooling system in an emergency, the cooling system will need to be drained, flushed, and refilled with fresh OAT coolant (conforming to MS.90032), by an authorized dealer as soon as possible.**
- **Do not use water alone or alcohol-based engine coolant (antifreeze) products. Do not use additional**

(Continued)

CAUTION! ***(Continued)***

rust inhibitors or antirust products, as they may not be compatible with the radiator engine coolant and may plug the radiator.
- **This vehicle has not been designed for use with propylene glycol-based engine coolant (antifreeze). Use of propylene glycol-based engine coolant (antifreeze) is not recommended.**

Adding Coolant

Your vehicle has been built with an improved engine coolant (OAT coolant conforming to MS.90032) that allows extended maintenance intervals. This engine coolant (antifreeze) can be used up to ten years or 150,000 miles (240,000 km) before replacement. To prevent reducing this extended maintenance period, it is important that you use the same engine coolant (OAT coolant conforming to MS.90032) throughout the life of your vehicle.

Please review these recommendations for using Organic Additive Technology (OAT) engine coolant (antifreeze) that meets the requirements of FCA Material Standard MS.90032. When adding engine coolant (antifreeze):

- We recommend using MOPAR Antifreeze/Coolant 10 Year/150,000 Mile Formula OAT (Organic Additive Technology) that meets the requirements of FCA Material Standard MS.90032.
- Mix a minimum solution of 50% OAT engine coolant that meets the requirements of FCA Material Standard MS.90032 and distilled water. Use higher concentrations (not to exceed 70%) if temperatures below –34°F (–37°C) are anticipated.
- Use only high purity water such as distilled or deionized water when mixing the water/engine coolant (antifreeze) solution. The use of lower quality water will reduce the amount of corrosion protection in the engine cooling system.

Please note that it is the owner's responsibility to maintain the proper level of protection against freezing according to the temperatures occurring in the area where the vehicle is operated.

NOTE:

- Some vehicles require special tools to add coolant properly. Failure to fill these systems properly could lead to severe internal engine damage. If any coolant is needed to be added to the system, please contact your local authorized dealer.
- Mixing engine coolant (antifreeze) types is not recommended and can result in cooling system damage. If HOAT and OAT coolant are mixed in an emergency, have a authorized dealer drain, flush, and refill with OAT coolant (conforming to MS.90032) as soon as possible.

Cooling System Pressure Cap

The cap must be fully tightened to prevent loss of engine coolant (antifreeze) and to ensure that engine coolant (antifreeze) will return to the radiator from the coolant recovery tank.

The cap should be inspected and cleaned if there is any accumulation of foreign material on the sealing surfaces.

WARNING!

- **Do not open hot engine cooling system. Never add engine coolant (antifreeze) when the engine is overheated. Do not loosen or remove the cap to cool an overheated engine. Heat causes pressure to build up in the cooling system. To prevent scalding or injury, do not remove the pressure cap while the system is hot or under pressure.**

(Continued)

WARNING! *(Continued)*

- **Do not use a pressure cap other than the one specified for your vehicle. Personal injury or engine damage may result.**

Disposal Of Used Engine Coolant

Used ethylene glycol-based engine coolant (antifreeze) is a regulated substance requiring proper disposal. Check with your local authorities to determine the disposal rules for your community. To prevent ingestion by animals or children, do not store ethylene glycol-based engine coolant in open containers or allow it to remain in puddles on the ground. If ingested by a child or pet, seek emergency assistance immediately. Clean up any ground spills immediately.

Coolant Level

The coolant expansion bottle provides a quick visual method for determining that the coolant level is adequate. With the engine off and cold, the level of the engine coolant (antifreeze) in the bottle should be between the “MIN” and “MAX” marks.

As long as the engine operating temperature is satisfactory, the coolant bottle need only be checked once a month.

When additional engine coolant (antifreeze) is needed to maintain the proper level, it should be added to the coolant bottle. Do not overfill.

Points To Remember

NOTE: When the vehicle is stopped after a few miles/kilometers of operation, you may observe vapor coming from the front of the engine compartment. This is normally a result of moisture from rain, snow, or high humidity accumulating on the radiator and being vaporized when the thermostat opens, allowing hot engine coolant (antifreeze) to enter the radiator.

If an examination of your engine compartment shows no evidence of radiator or hose leaks, the vehicle may be safely driven. The vapor will soon dissipate.

- Do not overfill the coolant expansion bottle.
- Check the coolant freeze point in the radiator and in the coolant expansion bottle. If engine coolant (antifreeze) needs to be added, the contents of the coolant expansion bottle must also be protected against freezing.

- If frequent engine coolant (antifreeze) additions are required, the cooling system should be pressure tested for leaks.
- Maintain engine coolant (antifreeze) concentration at a minimum of 50% OAT coolant (conforming to MS.90032) and distilled water for proper corrosion protection of your engine which contains aluminum components.
- Keep the front of the radiator clean. If your vehicle is equipped with air conditioning, keep the front of the condenser clean.
- Do not change the thermostat for Summer or Winter operation. If replacement is ever necessary, install ONLY the correct type thermostat. Other designs may result in unsatisfactory engine coolant (antifreeze) performance, poor gas mileage, and increased emissions.

Brake System

In order to assure brake system performance, all brake system components should be inspected periodically. Refer to the "Maintenance Schedule" for the proper maintenance intervals.

WARNING!

Riding the brakes can lead to brake failure and possibly a collision. Driving with your foot resting or riding on the brake pedal can result in abnormally high brake temperatures, excessive lining wear, and possible brake damage. Riding the brakes may also reduce braking capacity in an emergency.

Brake Master Cylinder

The fluid level in the master cylinder should be checked when performing under hood services, or immediately if the "Brake Warning Light" is on.

Be sure to clean the top of the master cylinder area before removing the cap. If necessary, add fluid to bring the fluid level up to the requirements described on the brake fluid reservoir. Fluid level can be expected to fall as the brake pads wear. The brake fluid level should be checked when the pads are replaced. However, low fluid level may be caused by a leak and a checkup may be needed.

NOTE: If your vehicle is equipped with a **manual transmission**, the brake fluid reservoir supplies fluid to both the brake system and the clutch release system. The two systems are separated in the reservoir, and a leak in one system will not affect the other system. The **manual transmission** clutch release system should not require fluid replacement during the life of the vehicle. If the brake fluid reservoir is low and the brake system does not indicate any leaks or other problems, it may be a result of a leak in the hydraulic clutch release system. See your local authorized dealer for service.

Use only manufacturer's recommended brake fluid. Refer to "Fluids, Lubricants, And Genuine Parts" in the "Technical Data" section for further information.

WARNING!

- **Use only manufacturer's recommended brake fluid. Refer to "Fluids, Lubricants, And Genuine Parts" in the "Technical Data" section for further information. Using the wrong type of brake fluid can severely damage your brake system and/or impair its performance. The proper type of brake fluid for your vehicle is also identified on the original factory installed hydraulic master cylinder reservoir.**
- **To avoid contamination from foreign matter or moisture, use only new brake fluid or fluid that has been in a tightly closed container. Keep the master**

(Continued)

WARNING! *(Continued)*

cylinder reservoir cap secured at all times. Brake fluid in a open container absorbs moisture from the air resulting in a lower boiling point. This may cause it to boil unexpectedly during hard or prolonged braking, resulting in sudden brake failure. This could result in a collision.

- **Overfilling the brake fluid reservoir can result in spilling brake fluid on hot engine parts, causing the brake fluid to catch fire. Brake fluid can also damage painted and vinyl surfaces, care should be taken to avoid its contact with these surfaces.**
- **Overfilling the brake fluid reservoir can result in spilling brake fluid on hot engine parts, causing the brake fluid to catch fire. Brake fluid can also damage painted and vinyl surfaces, care should be taken to avoid its contact with these surfaces.**

CAUTION!

Use of improper brake fluids will affect overall clutch system performance. Improper brake fluids may damage the clutch system resulting in loss of clutch function and the ability to shift the transmission.

Manual Transmission — If Equipped

Lubricant Selection

Use only the manufacturers recommended transmission fluid. Refer to “Fluids, Lubricants, And Genuine Parts” in “Maintaining And Caring For Your Vehicle” for further information.

Please see your authorized dealer for service.

Fluid Level Check

Check the fluid level by removing the fill plug. The fluid level should be between the bottom of the fill hole and a point not more than 3/16 inch (4.7 mm) below the bottom of the hole.

Add fluid, if necessary, to maintain the proper level.

Please see your authorized dealer for service.

Frequency Of Fluid Change

Under normal operating conditions, the fluid installed at the factory will give satisfactory lubrication for the life of the vehicle. Fluid changes are not necessary unless lubricant has become contaminated with water.

NOTE: If contaminated with water, the fluid should be changed immediately.

Automatic Transmission — If Equipped

Selection Of Lubricant

It is important to use the proper transmission fluid to ensure optimum transmission performance and life. Use only the manufacturer's specified transmission fluid. Refer to "Fluids, Lubricants, And Genuine Parts" in "Technical Data" for fluid specifications. It is important to maintain the transmission fluid at the correct level using the recommended fluid.

NOTE: No chemical flushes should be used in any transmission; only the approved lubricant should be used.

CAUTION!

Using a transmission fluid other than the manufacturer's recommended fluid may cause deterioration in transmission shift quality and/or torque converter shudder. Refer to "Fluids, Lubricants, And Genuine Parts" in "Technical Data" for fluid specifications.

Special Additives

The manufacturer strongly recommends against using any special additives in the transmission. Automatic Transmission Fluid (ATF) is an engineered product and its performance may be impaired by supplemental additives. Therefore, do not add any fluid additives to the transmission. Avoid using transmission sealers as they may adversely affect seals.

CAUTION!

Do not use chemical flushes in your transmission as the chemicals can damage your transmission components. Such damage is not covered by the New Vehicle Limited Warranty.

Fluid Level Check

The fluid level is preset at the factory and does not require adjustment under normal operating conditions. Routine fluid level checks are not required, therefore the transmission has no dipstick. Your authorized dealer can check your transmission fluid level using special service tools. If you notice fluid leakage or transmission malfunction, visit your authorized dealer immediately to have the transmission fluid level checked. Operating the vehicle with an improper fluid level can cause severe transmission damage.

CAUTION!

If a transmission fluid leak occurs, visit your authorized dealer immediately. Severe transmission damage may occur. Your authorized dealer has the proper tools to adjust the fluid level accurately.

Fluid And Filter Changes

Under normal operating conditions, the fluid installed at the factory will provide satisfactory lubrication for the life of the vehicle.

Routine fluid and filter changes are not required. However, change the fluid and filter if the fluid becomes contaminated (with water, etc.), or if the transmission is disassembled for any reason.

Appearance Care And Protection From Corrosion

Protection Of Body And Paint From Corrosion

Vehicle body care requirements vary according to geographic locations and usage. Chemicals that make roads passable in snow and ice and those that are sprayed on trees and road surfaces during other seasons are highly corrosive to the metal in your vehicle. Outside parking, which exposes your vehicle to airborne contaminants, road surfaces on which the vehicle is operated, extreme hot or cold weather and other extreme conditions will have an adverse effect on paint, metal trim, and underbody protection.

The following maintenance recommendations will enable you to obtain maximum benefit from the corrosion resistance built into your vehicle.

What Causes Corrosion?

Corrosion is the result of deterioration or removal of paint and protective coatings from your vehicle.

The most common causes are:

- Road salt, dirt and moisture accumulation.
- Stone and gravel impact.
- Insects, tree sap and tar.
- Salt in the air near seacoast localities.
- Atmospheric fallout/industrial pollutants.

Washing

- Wash your vehicle regularly. Always wash your vehicle in the shade using MOPAR Car Wash, or a mild car wash soap, and rinse the panels completely with clear water.
- If insects, tar, or other similar deposits have accumulated on your vehicle, use MOPAR Super Kleen Bug and Tar Remover to remove.
- Use a high quality cleaner wax, such as MOPAR Cleaner Wax to remove road film, stains and to protect your paint finish. Take care never to scratch the paint.
- Avoid using abrasive compounds and power buffing that may diminish the gloss or thin out the paint finish.

CAUTION!

- **Do not use abrasive or strong cleaning materials such as steel wool or scouring powder that will scratch metal and painted surfaces.**
- **Use of power washers exceeding 1,200 psi (8 274 kPa) can result in damage or removal of paint and decals.**

(Continued)

CAUTION! ***(Continued)***

- **If the engine compartment is washed with an high pressure jet, keep it at a distance of at least 8 inches (20 centimeters) from filler surface.**

Special Care

- If you drive on salted or dusty roads or if you drive near the ocean, hose off the undercarriage at least once a month.
- It is important that the drain holes in the lower edges of the doors, rocker panels, and trunk be kept clear and open.
- If you detect any stone chips or scratches in the paint, touch them up immediately. The cost of such repairs is considered the responsibility of the owner.
- If your vehicle is damaged due to a collision or similar cause that destroys the paint and protective coating, have your vehicle repaired as soon as possible. The cost of such repairs is considered the responsibility of the owner.
- If you carry special cargo such as chemicals, fertilizers, de-icer salt, etc., be sure that such materials are well packaged and sealed.
- If a lot of driving is done on gravel roads, consider mud or stone shields behind each wheel.
- Use MOPAR Touch Up Paint on scratches as soon as possible. Your authorized dealer has touch up paint to match the color of your vehicle.

Wheel And Wheel Trim Care

- All wheels and wheel trim, especially aluminum and chrome plated wheels, should be cleaned regularly with a mild soap and water to prevent corrosion.
- To remove heavy soil and/or excessive brake dust, use MOPAR Wheel Cleaner.

NOTE: If your vehicle is equipped with Dark Vapor or Black Satin Chrome wheels DO NOT USE wheel cleaners, abrasives or polishing compounds. They will permanently damage this finish and such damage is not covered by the New Vehicle Limited Warranty. USE ONLY MILD SOAP AND WATER WITH A SOFT CLOTH. Used on a regular basis this is all that is required to maintain this finish.

CAUTION!

Do not use scouring pads, steel wool, a bristle brush, or metal polishes. Do not use oven cleaner. These products may damage the wheel's protective finish. Avoid automatic car washes that use acidic solutions or harsh brushes that may damage the wheel's protective finish. Only MOPAR Wheel Cleaner or equivalent is recommended.

Stain Repel Fabric Cleaning Procedure — If Equipped

Stain Repel seats may be cleaned in the following manner:

- Remove as much of the stain as possible by blotting with a clean, dry towel.
- Blot any remaining stain with a clean, damp towel.
- For tough stains, apply MOPAR Total Clean, or a mild soap solution to a clean, damp cloth and remove stain. Use a fresh, damp towel to remove soap residue.
- For grease stains, apply MOPAR Multi-Purpose Cleaner to a clean, damp cloth and remove stain. Use a fresh, damp towel to remove soap residue.
- Do not use any harsh solvents or any other form of protectants on Stain Repel products.

Interior Care

Use MOPAR Total Clean to clean fabric upholstery and carpeting.

Use MOPAR Total Clean to clean vinyl upholstery.

MOPAR Total Clean is specifically recommended for leather upholstery.

Your leather upholstery can be best preserved by regular cleaning with a damp soft cloth. Small particles of dirt can act as an abrasive and damage the leather upholstery and should be removed promptly with a damp cloth. Stubborn soils can be removed easily with a soft cloth and MOPAR Total Clean. Care should be taken to avoid soaking your leather upholstery with any liquid. Please do not use polishes, oils, cleaning fluids, solvents, detergents, or ammonia-based cleaners to clean your leather upholstery. Application of a leather conditioner is not required to maintain the original condition.

WARNING!

Do not use volatile solvents for cleaning purposes. Many are potentially flammable, and if used in closed areas they may cause respiratory harm.

CAUTION!

Direct contact of air fresheners, insect repellents, suntan lotions, or hand sanitizers to the plastic, painted, or decorated surfaces of the interior may cause permanent damage. Wipe away immediately.

CAUTION!

Damage caused by these type of products may not be covered by your New Vehicle Limited Warranty.

CAUTION!

Do not use Alcohol and Alcohol-based and/or Keton based cleaning products to clean leather seats, as damage to the seat may result.

Cleaning Headlights

Your vehicle has plastic headlights that are lighter and less susceptible to stone breakage than glass headlights.

Plastic is not as scratch resistant as glass and therefore different lens cleaning procedures must be followed.

To minimize the possibility of scratching the lenses and reducing light output, avoid wiping with a dry cloth. To remove road dirt, wash with a mild soap solution followed by rinsing.

Do not use abrasive cleaning components, solvents, steel wool or other aggressive material to clean the lenses.

Glass Surfaces

All glass surfaces should be cleaned on a regular basis with MOPAR Glass Cleaner, or any commercial household-type glass cleaner. Never use an abrasive type cleaner. Use caution when cleaning the inside rear window equipped with electric defrosters or windows equipped with radio antennas. Do not use scrapers or other sharp instrument that may scratch the elements.

When cleaning the rear view mirror, spray cleaner on the towel or cloth that you are using. Do not spray cleaner directly on the mirror.

Instrument Panel Cover

The instrument panel cover has a low glare surface which minimizes reflections on the windshield. Do not use protectants or other products which may cause undesirable reflections. Use soap and warm water to restore the low glare surface.

Instrument Panel Bezels

CAUTION!

When installing hanging air fresheners in your vehicle, read the installation instructions carefully. Some air fresheners will damage the finish of painted or decorated parts if allowed to directly contact any surface.

Cleaning Plastic Instrument Cluster Lenses

The lenses in front of the instruments in this vehicle are molded in clear plastic. When cleaning the lenses, care must be taken to avoid scratching the plastic.

1. Clean with a wet soft cloth. A mild soap solution may be used, but do not use high alcohol content or abrasive cleaners. If soap is used, wipe clean with a clean damp cloth.
2. Dry with a soft cloth.

Seat Belt Maintenance

Do not bleach, dye or clean the belts with chemical solvents or abrasive cleaners. This will weaken the fabric. Sun damage can also weaken the fabric.

If the belts need cleaning, use a mild soap solution or lukewarm water. Do not remove the belts from the vehicle to wash them. Dry with a soft cloth.

Replace the belts if they appear frayed or worn or if the buckles do not work properly.

WARNING!

A frayed or torn belt could rip apart in a collision and leave you with no protection. Inspect the belt system periodically, checking for cuts, frays, or loose parts.

(Continued)

WARNING! *(Continued)*

Damaged parts must be replaced immediately. Do not disassemble or modify the system. Seat belt assemblies must be replaced after a collision if they have been damaged (i.e., bent retractor, torn webbing, etc.).

LIFTING A VEHICLE

In the case where it is necessary to lift the vehicle, go to a your authorized dealer or service station.

The lifting points on the vehicle are marked on side skirts with symbols (▽ see example shown).

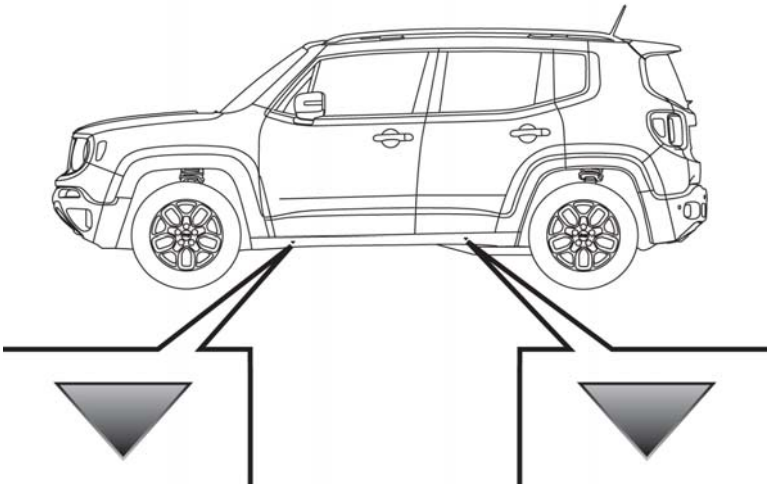

Lifting Point Locations

TIRE SAFETY INFORMATION

Tire Markings

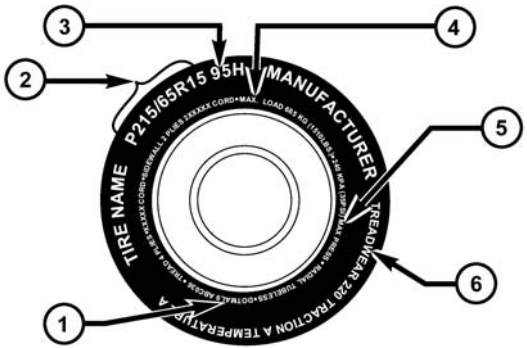

1 — U.S. DOT Safety Standards Code (TIN)
2 — Size Designation
3 — Service Description
4 — Maximum Load
5 — Maximum Pressure
6 — Treadwear, Traction and Temperature Grades

NOTE:

- P (Passenger) — Metric tire sizing is based on U.S. design standards. P-Metric tires have the letter “P” molded into the sidewall preceding the size designation. Example: P215/65R15 95H.
- European — Metric tire sizing is based on European design standards. Tires designed to this standard have the tire size molded into the sidewall beginning with the section width. The letter ″P″ is absent from this tire size designation. Example: 215/65R15 96H.
- LT (Light Truck) — Metric tire sizing is based on U.S. design standards. The size designation for LT-Metric tires is the same as for P-Metric tires except for the letters “LT” that are molded into the sidewall preceding the size designation. Example: LT235/85R16.

- Temporary spare tires are designed for temporary emergency use only. Temporary high pressure compact spare tires have the letter "T" or "S" molded into the sidewall preceding the size designation. Example: T145/80D18 103M.
- High flotation tire sizing is based on U.S. design standards and it begins with the tire diameter molded into the sidewall. Example: 31x10.5 R15 LT.

Tire Sizing Chart

EXAMPLE:

Example Size Designation: P215/65R15XL 95H, 215/65R15 96H, LT235/85R16C, T145/80D18 103M, 31x10.5 R15 LT
P = Passenger car tire size based on U.S. design standards, or **"....blank...."** = Passenger car tire based on European design standards, or **LT** = Light truck tire based on U.S. design standards, or **T or S** = Temporary spare tire or **31** = Overall diameter in inches (in)
215, 235, 145 = Section width in millimeters (mm)
65, 85, 80 = Aspect ratio in percent (%) – Ratio of section height to section width of tire, or **10.5** = Section width in inches (in)

EXAMPLE:
R = Construction code – ″R″ means radial construction, or – ″D″ means diagonal or bias construction
15, 16, 18 = Rim diameter in inches (in)
Service Description:
95 = Load Index – A numerical code associated with the maximum load a tire can carry
H = Speed Symbol – A symbol indicating the range of speeds at which a tire can carry a load corresponding to its load index under certain operating conditions – The maximum speed corresponding to the speed symbol should only be achieved under specified operating conditions (i.e., tire pressure, vehicle loading, road conditions, and posted speed limits)

EXAMPLE:

Load Identification:
Absence of the following load identification symbols on the sidewall of the tire indicates a Standard Load (SL) tire:

- **XL** = Extra load (or reinforced) tire, or
- **LL** = Light load tire or
- **C, D, E, F, G** = Load range associated with the maximum load a tire can carry at a specified pressure

Maximum Load – Maximum load indicates the maximum load this tire is designed to carry

Maximum Pressure – Maximum pressure indicates the maximum permissible cold tire inflation pressure for this tire

Tire Identification Number (TIN)

The TIN may be found on one or both sides of the tire, however, the date code may only be on one side. Tires with white sidewalls will have the full TIN, including the date code, located on the white sidewall side of the tire. Look for the TIN on the outboard side of black sidewall tires as mounted on the vehicle. If the TIN is not found on the outboard side, then you will find it on the inboard side of the tire.

EXAMPLE:
DOT MA L9 ABCD 0301
DOT = Department of Transportation – This symbol certifies that the tire is in compliance with the U.S. Department of Transportation tire safety standards and is approved for highway use
MA = Code representing the tire manufacturing location (two digits)
L9 = Code representing the tire size (two digits)
ABCD = Code used by the tire manufacturer (one to four digits)
03 = Number representing the week in which the tire was manufactured (two digits) – 03 means the 3rd week
01 = Number representing the year in which the tire was manufactured (two digits) – 01 means the year 2001 – Prior to July 2000, tire manufacturers were only required to have one number to represent the year in which the tire was manufactured. Example: 031 could represent the 3rd week of 1981 or 1991

Tire Terminology And Definitions

Term	Definition
B-Pillar	The vehicle B-Pillar is the structural member of the body located behind the front door.
Cold Tire Inflation Pressure	Cold tire inflation pressure is defined as the tire pressure after the vehicle has not been driven for at least three hours, or driven less than 1 mile (1.6 km) after sitting for a minimum of three hours. Inflation pressure is measured in units of PSI (pounds per square inch) or kPa (kilopascals).
Maximum Inflation Pressure	The maximum inflation pressure is the maximum permissible cold tire inflation pressure for this tire. The maximum inflation pressure is molded into the sidewall.
Recommended Cold Tire Inflation Pressure	Vehicle manufacturer's recommended cold tire inflation pressure as shown on the tire placard.
Tire Placard	A label permanently attached to the vehicle describing the vehicle's loading capacity, the original equipment tire sizes and the recommended cold tire inflation pressures.

Tire Loading And Tire Pressure

Tire And Loading Information Placard Location

NOTE: The proper cold tire inflation pressure is listed on the driver's side B-Pillar or the rear edge of the driver's side door.

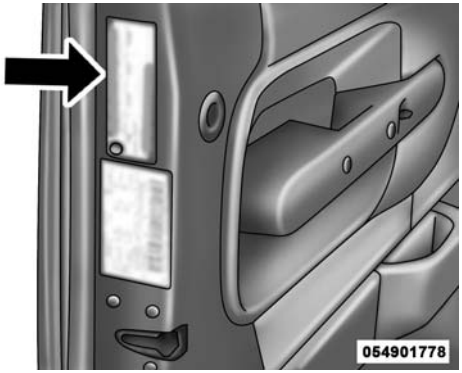

Example Tire Placard Location (Door)

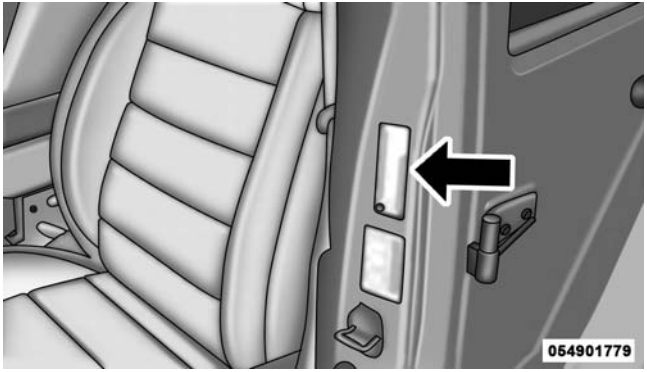

Example Tire Placard Location (B-Pillar)

Tire And Loading Information Placard

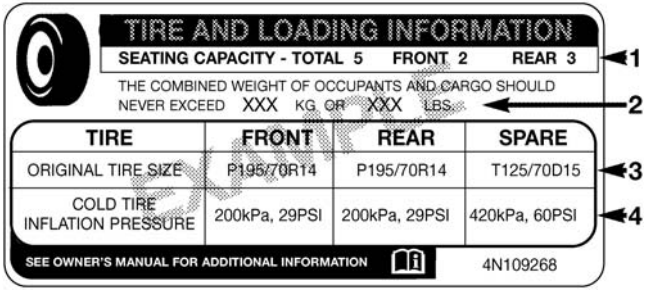

811b5a9a

Tire And Loading Information Placard

This placard tells you important information about the:

1. Number of people that can be carried in the vehicle.
2. Total weight your vehicle can carry.
3. Tire size designed for your vehicle.
4. Cold tire inflation pressures for the front, rear, and spare tires.

Loading

The vehicle maximum load on the tire must not exceed the load carrying capacity of the tire on your vehicle. You will not exceed the tire's load carrying capacity if you adhere to the loading conditions, tire size, and cold tire inflation pressures specified on the Tire and Loading Information placard in "Vehicle Loading" in the "Starting And Operating" section of this manual.

NOTE: Under a maximum loaded vehicle condition, gross axle weight ratings (GAWRs) for the front and rear axles must not be exceeded. For further information on GAWRs, vehicle loading, and trailer towing, refer to "Vehicle Loading" in the "Starting And Operating" section of this manual.

To determine the maximum loading conditions of your vehicle, locate the statement "The combined weight of occupants and cargo should never exceed XXX lbs or XXX kg" on the Tire and Loading Information placard. The combined weight of occupants, cargo/luggage and trailer tongue weight (if applicable) should never exceed the weight referenced here.

Steps For Determining Correct Load Limit

1. Locate the statement "The combined weight of occupants and cargo should never exceed XXX lbs or XXX kg" on your vehicle's placard.
2. Determine the combined weight of the driver and passengers that will be riding in your vehicle.
3. Subtract the combined weight of the driver and passengers from XXX lbs or XXX kg.
4. The resulting figure equals the available amount of cargo and luggage load capacity. For example, if "XXX" amount equals 1,400 lbs (635 kg) and there will be five 150 lb (68 kg) passengers in your vehicle, the amount of available cargo and luggage load capacity is 650 lbs (295 kg) (since 5 x 150 lbs (68 kg) = 750 lbs (340 kg), and 1400 lbs (635 kg) – 750 lbs (340 kg) = 650 lbs [295 kg]).
5. Determine the combined weight of luggage and cargo being loaded on the vehicle. That weight may not safely exceed the available cargo and luggage load capacity calculated in step 4.

NOTE:

- If your vehicle will be towing a trailer, load from your trailer will be transferred to your vehicle. The following table shows examples on how to calculate total load, cargo/luggage, and towing capacities of your vehicle with varying seating configurations and number and size of occupants. This table is for illustration purposes only and may not be accurate for the seating and load carry capacity of your vehicle.
- For the following example, the combined weight of occupants and cargo should never exceed 865 lbs (392 kg).

Occupants			Combined weight of occupants and cargo from Tire Placard	MINUS	Combined Occupant's weight	=	AVAILABLE Cargo/Luggage and Trailer Tongue Weight
TOTAL	FRONT	REAR					
EXAMPLE 1							
5	2	3	865 lbs	minus	Occupant 1: 200 lbs Occupant 2: 130 lbs Occupant 3: 160 lbs Occupant 4: 100 lbs Occupant 5: 80 lbs TOTAL WEIGHT: 670 lbs 670 lbs	=	195 lbs
EXAMPLE 2							
3	2	1	865 lbs	minus	Occupant 1: 210 lbs Occupant 2: 180 lbs Occupant 3: 150 lbs TOTAL WEIGHT: 540 lbs 540 lbs	=	325 lbs
EXAMPLE 3							
2	2	0	865 lbs	minus	Occupant 1: 200 lbs Occupant 2: 200 lbs TOTAL WEIGHT: 400 lbs 400 lbs	=	465 lbs

EXAMPLE

811a4d11

WARNING!

Overloading of your tires is dangerous. Overloading can cause tire failure, affect vehicle handling, and increase your stopping distance. Use tires of the recommended load capacity for your vehicle. Never overload them.

TIRES — GENERAL INFORMATION

Tire Pressure

Proper tire inflation pressure is essential to the safe and satisfactory operation of your vehicle. Four primary areas are affected by improper tire pressure:

- Safety and Vehicle Stability
- Economy
- Tread Wear
- Ride Comfort

Safety

WARNING!

- **Improperly inflated tires are dangerous and can cause collisions.**
- **Underinflation increases tire flexing and can result in overheating and tire failure.**
- **Overinflation reduces a tire's ability to cushion shock. Objects on the road and chuckholes can cause damage that result in tire failure.**
- **Overinflated or underinflated tires can affect vehicle handling and can fail suddenly, resulting in loss of vehicle control.**
- **Unequal tire pressures can cause steering problems. You could lose control of your vehicle.**

(Continued)

WARNING! ***(Continued)***

- **Unequal tire pressures from one side of the vehicle to the other can cause the vehicle to drift to the right or left.**
- **Always drive with each tire inflated to the recommended cold tire inflation pressure.**

Both under-inflation and over-inflation affect the stability of the vehicle and can produce a feeling of sluggish response or over responsiveness in the steering.

NOTE:

- Unequal tire pressures from side to side may cause erratic and unpredictable steering response.
- Unequal tire pressure from side to side may cause the vehicle to drift left or right.

Fuel Economy

Underinflated tires will increase tire rolling resistance resulting in higher fuel consumption.

Tread Wear

Improper cold tire inflation pressures can cause abnormal wear patterns and reduced tread life, resulting in the need for earlier tire replacement.

Ride Comfort And Vehicle Stability

Proper tire inflation contributes to a comfortable ride. Over-inflation produces a jarring and uncomfortable ride.

Tire Inflation Pressures

The proper cold tire inflation pressure is listed on the driver's side B-Pillar or rear edge of the driver's side door.

At least once a month:

- Check and adjust tire pressure with a good quality pocket-type pressure gauge. Do not make a visual judgement when determining proper inflation. Tires may look properly inflated even when they are under-inflated.
- Inspect tires for signs of tire wear or visible damage.

CAUTION!

After inspecting or adjusting the tire pressure, always reinstall the valve stem cap. This will prevent moisture and dirt from entering the valve stem, which could damage the valve stem.

Inflation pressures specified on the placard are always "cold tire inflation pressure". Cold tire inflation pressure is defined as the tire pressure after the vehicle has not been driven for at least three hours, or driven less than 1 mile (1.6 km) after sitting for a minimum of three hours. The cold tire inflation pressure must not exceed the maximum inflation pressure molded into the tire sidewall.

Check tire pressures more often if subject to a wide range of outdoor temperatures, as tire pressures vary with temperature changes.

Tire pressures change by approximately 1 psi (7 kPa) per 12°F (7°C) of air temperature change. Keep this in mind when checking tire pressure inside a garage, especially in the Winter.

Example: If garage temperature = 68°F (20°C) and the outside temperature = 32°F (0°C) then the cold tire inflation pressure should be increased by 3 psi (21 kPa), which equals 1 psi (7 kPa) for every 12°F (7°C) for this outside temperature condition.

Tire pressure may increase from 2 to 6 psi (13 to 40 kPa) during operation. DO NOT reduce this normal pressure build up or your tire pressure will be too low.

Tire Pressures For High Speed Operation

The manufacturer advocates driving at safe speeds and within posted speed limits. Where speed limits or conditions are such that the vehicle can be driven at high speeds, maintaining correct tire inflation pressure is very important. Increased tire pressure and reduced vehicle loading may be required for high-speed vehicle operation. Refer to your authorized tire dealer or original equipment vehicle dealer for recommended safe operating speeds, loading and cold tire inflation pressures.

WARNING!

High speed driving with your vehicle under maximum load is dangerous. The added strain on your tires could cause them to fail. You could have a serious collision. Do not drive a vehicle loaded to the maximum capacity at continuous speeds above 75 mph (120 km/h).

Radial Ply Tires

WARNING!

Combining radial ply tires with other types of tires on your vehicle will cause your vehicle to handle poorly. The instability could cause a collision. Always use radial ply tires in sets of four. Never combine them with other types of tires.

Tire Repair

If your tire becomes damaged, it may be repaired if it meets the following criteria:

- The tire has not been driven on when flat.
- The damage is only on the tread section of your tire (sidewall damage is not repairable).
- The puncture is no greater than a ¼ of an inch (6 mm).

Consult an authorized tire dealer for tire repairs and additional information.

Damaged Run Flat tires, or Run Flat tires that have experienced a loss of pressure should be replaced immediately with another Run Flat tire of identical size and service description (Load Index and Speed Symbol).

Tire Types

All Season Tires — If Equipped

All Season tires provide traction for all seasons (Spring, Summer, Fall and Winter). Traction levels may vary between different all season tires. All season tires can be identified by the M+S, M&S, M/S or MS designation on the tire sidewall. Use all season tires only in sets of four; failure to do so may adversely affect the safety and handling of your vehicle.

Summer Or Three Season Tires — If Equipped

Summer tires provide traction in both wet and dry conditions, and are not intended to be driven in snow or on ice. If your vehicle is equipped with Summer tires, be aware these tires are not designed for Winter or cold driving conditions. Install Winter tires on your vehicle when ambient temperatures are less than 40°F (5°C) or if roads are covered with ice or snow. For more information, contact an authorized dealer.

Summer tires do not contain the all season designation or mountain/snowflake symbol on the tire sidewall. Use Summer tires only in sets of four; failure to do so may adversely affect the safety and handling of your vehicle.

WARNING!

Do not use Summer tires in snow/ice conditions. You could lose vehicle control, resulting in severe injury or death. Driving too fast for conditions also creates the possibility of loss of vehicle control.

Snow Tires

Some areas of the country require the use of snow tires during the Winter. Snow tires can be identified by a "mountain/snowflake" symbol on the tire sidewall.

If you need snow tires, select tires equivalent in size and type to the original equipment tires. Use snow tires only in sets of four; failure to do so may adversely affect the safety and handling of your vehicle.

Snow tires generally have lower speed ratings than what was originally equipped with your vehicle and should not be operated at sustained speeds over 75 mph (120 km/h). For speeds above 75 mph (120 km/h) refer to original equipment or an authorized tire dealer for recommended safe operating speeds, loading and cold tire inflation pressures.

While studded tires improve performance on ice, skid and traction capability on wet or dry surfaces may be poorer than that of non-studded tires. Some states prohibit studded tires; therefore, local laws should be checked before using these tire types.

Run Flat Tires — If Equipped

Run Flat tires allow you the capability to drive 50 miles (80 km) at 50 mph (80 km/h) after a rapid loss of inflation pressure. This rapid loss of inflation is referred to as the Run Flat mode. A Run Flat mode occurs when the tire inflation pressure is of/or below 14 psi (96 kPa). Once a Run Flat tire reaches the run flat mode it has limited driving capabilities and needs to be replaced immediately. A Run Flat tire is not repairable.

It is not recommended driving a vehicle loaded at full capacity or to tow a trailer while a tire is in the run flat mode.

See the tire pressure monitoring section for more information.

Spare Tires — If Equipped

NOTE: For vehicles equipped with Tire Service Kit instead of a spare tire, please refer to "Tire Service Kit" in "In Case Of Emergency" for further information.

CAUTION!

Because of the reduced ground clearance, do not take your vehicle through an automatic car wash with a compact or limited-use temporary spare installed. Damage to the vehicle may result.

Tire Spinning

When stuck in mud, sand, snow, or ice conditions, do not spin your vehicle's wheels above 30 mph (48 km/h) or for longer than 30 seconds continuously without stopping.

Refer to "Freeing A Stuck Vehicle" in "In Case Of Emergency" for further information.

WARNING!

Fast spinning tires can be dangerous. Forces generated by excessive wheel speeds may cause tire damage or failure. A tire could explode and injure someone. Do not spin your vehicle's wheels faster than 30 mph (48 km/h) for more than 30 seconds continuously when you are stuck, and do not let anyone near a spinning wheel, no matter what the speed.

Tread Wear Indicators

Tread wear indicators are in the original equipment tires to help you in determining when your tires should be replaced.

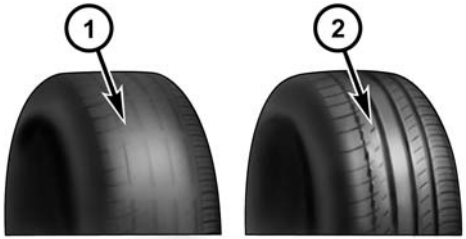

055007576

Tire Tread

1 — Worn Tire
2 — New Tire

These indicators are molded into the bottom of the tread grooves. They will appear as bands when the tread depth becomes a 1/16 of an inch (1.6 mm). When the tread is worn to the tread wear indicators, the tire should be replaced. Refer to “Replacement Tires” in this section for further information.

Life Of Tire

The service life of a tire is dependent upon varying factors including, but not limited to:

- Driving style.
- Tire pressure - Improper cold tire inflation pressures can cause uneven wear patterns to develop across the tire tread. These abnormal wear patterns will reduce tread life, resulting in the need for earlier tire replacement.
- Distance driven.

- Performance tires, tires with a speed rating of V or higher, and Summer tires typically have a reduced tread life. Rotation of these tires per the vehicle maintenance schedule is highly recommended.

WARNING!

Tires and the spare tire should be replaced after six years, regardless of the remaining tread. Failure to follow this warning can result in sudden tire failure. You could lose control and have a collision resulting in serious injury or death.

Keep dismounted tires in a cool, dry place with as little exposure to light as possible. Protect tires from contact with oil, grease, and gasoline.

Replacement Tires

The tires on your new vehicle provide a balance of many characteristics. They should be inspected regularly for wear and correct cold tire inflation pressures. The manufacturer strongly recommends that you use tires equivalent to the originals in size, quality and performance when replacement is needed. Refer to the paragraph on "Tread Wear Indicator". Refer to the Tire and Loading Information placard or the Vehicle Certification Label for the size designation of your tire. The Load Index and Speed Symbol for your tire will be found on the original equipment tire sidewall. See the Tire Sizing Chart example found in the "Tire Safety Information" section of this manual for more information relating to the Load Index and Speed Symbol of a tire.

It is recommended to replace the two front tires or two rear tires as a pair. Replacing just one tire can seriously affect your vehicle's handling. If you ever replace a wheel, make sure that the wheel's specifications match those of the original wheels.

It is recommended you contact your authorized tire dealer or original equipment dealer with any questions you may have on tire specifications or capability. Failure to use equivalent replacement tires may adversely affect the safety, handling, and ride of your vehicle.

WARNING!

- **Do not use a tire, wheel size or rating other than that specified for your vehicle. Some combinations of unapproved tires and wheels may change suspension dimensions and performance characteristics, resulting in changes to steering, handling, and**

(Continued)

WARNING! ***(Continued)***

braking of your vehicle. This can cause unpredictable handling and stress to steering and suspension components. You could lose control and have a collision resulting in serious injury or death. Use only the tire and wheel sizes with load ratings approved for your vehicle.

- **Never use a tire with a smaller load index or capacity, other than what was originally equipped on your vehicle. Using a tire with a smaller load index could result in tire overloading and failure. You could lose control and have a collision.**
- **Failure to equip your vehicle with tires having adequate speed capability can result in sudden tire failure and loss of vehicle control.**

CAUTION!

Replacing original tires with tires of a different size may result in false speedometer and odometer readings.

TIRE CHAINS (TRACTION DEVICES)

Use of traction devices require sufficient tire-to-body clearance. Follow these recommendations to guard against damage.

- Traction device must be of proper size for the tire, as recommended by the traction device manufacturer.
- Install on front tires only
- Due to limited clearance, the following traction devices are recommended:

All Models:

- The use of 7mm tire chains is permitted with the use of 215/60R16 only. Front tires ONLY.
- Original Equipment 215/60R17, 215/65R17 and 225/55R18 tire sizes are NOT chainable.

CAUTION!

- **Use on front tires ONLY.**
- **Damage may result if tire chains or traction devices are used with original equipment size tires.**

WARNING!

Using tires of different size and type (M+S, Snow) between front and rear axles can cause unpredictable handling. You could lose control and have a collision.

CAUTION!

To avoid damage to your vehicle or tires, observe the following precautions:

- **Because of restricted traction device clearance between tires and other suspension components, it is important that only traction devices in good condition are used. Broken devices can cause serious damage. Stop the vehicle immediately if noise occurs that could indicate device breakage. Remove the damaged parts of the device before further use.**
- **Install device as tightly as possible and then retighten after driving about ½ mile (0.8 km).**
- **Do not exceed 30 mph (48 km/h).**
- **Drive cautiously and avoid severe turns and large bumps, especially with a loaded vehicle.**
- **Do not drive for a prolonged period on dry pavement.**

(Continued)

CAUTION! *(Continued)*

- **Observe the traction device manufacturer's instructions on the method of installation, operating speed, and conditions for use. Always use the suggested operating speed of the device manufacturer's if it is less than 30 mph (48 km/h).**
- **Do not use traction devices on a compact spare tire.**

TIRE ROTATION RECOMMENDATIONS

The tires on the front and rear of your vehicle operate at different loads and perform different steering, handling, and braking functions. For these reasons, they wear at unequal rates.

These effects can be reduced by timely rotation of tires. The benefits of rotation are especially worthwhile with aggressive tread designs such as those on On/Off Road

type tires. Rotation will increase tread life, help to maintain mud, snow, and wet traction levels, and contribute to a smooth, quiet ride.

Refer to the "Maintenance Schedule" for the proper maintenance intervals. The reasons for any rapid or unusual wear should be corrected prior to rotation being performed.

The suggested Front Wheel Drive (FWD) rotation method is the "rearward cross" shown in the following diagram. This rotation pattern does not apply to some directional tires that must not be reversed.

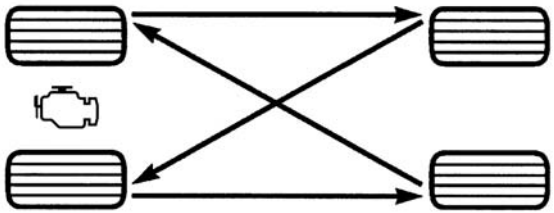

Front Wheel Drive (FWD) Tire Rotation

The suggested Four Wheel Drive (4WD) Tire rotation method is the "forward-cross" shown in the following diagram.

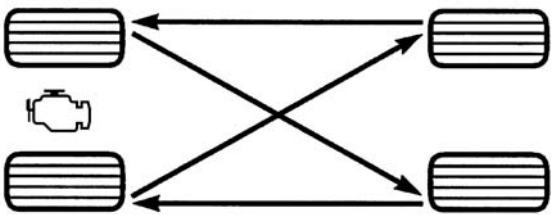

Four Wheel Drive (4WD) Tire Rotation

CAUTION!

Proper operation of four-wheel drive vehicles depends on tires of equal size, type and circumference on each wheel. Any difference in tire size can cause damage to the power transfer unit. Tire rotation schedule should be followed to balance tire wear.

STORING THE VEHICLE

If the vehicle should remain stationary for more than a month, observe the following precautions:

- Park your vehicle in a covered, dry and possibly airy location the windows open slightly;
- Check that the Electric Park Brake is not engaged.
- Disconnect the negative (-) terminal from the battery post and be sure that the battery is fully charged. During storage check battery charge quarterly.

- If you do not disconnect the battery from the electrical system, check the battery charge every thirty days.
- Clean and protect the painted parts by applying protective waxes.
- Clean and protect polished metal parts by applying protective waxes.
- Apply talcum powder to the front and rear wiper blades and leave raised from the glass.
- Cover the vehicle with an appropriate cover taking care not to damage the painted surface by dragging across dirty surfaces. Do not use plastic sheeting which will not allow the evaporation of moisture present on the surface of the vehicle.
- Inflate the tires at a pressure of +7.25 psi (+0.5 bar) is higher than recommended on the tire placard and check it periodically.
- Do not drain the engine cooling system.
- Whenever you leave the vehicle is stationary for two weeks or more, run the at engine idling and for approximately five minutes, with the air conditioning system on and high fan speed. This will ensure a proper lubrication of the system, thus minimizing the possibility of damage to the compressor when the vehicle is put back into operation.

CAUTION!

Before removal of the positive and negative terminals to the battery, wait at least a minute with ignition switch in the OFF position and close the drivers door. When reconnecting the positive and negative terminals to the battery be sure the ignition switch is in the OFF position and the drivers door is closed.

TECHNICAL DATA

CONTENTS

- VEHICLE IDENTIFICATION 596
  - Chassis Number 596
- WHEEL AND TIRE TORQUE SPECIFICATIONS 597
  - Torque Specifications 597
- FLUID CAPACITIES 600
- FLUIDS, LUBRICANTS, AND GENUINE PARTS 601
  - Engine 601
  - Chassis 602

VEHICLE IDENTIFICATION

Chassis Number

The chassis number (VIN) is stamped on a plate located on the left front corner of the instrument panel cover, which is visible from outside the car through the windshield.

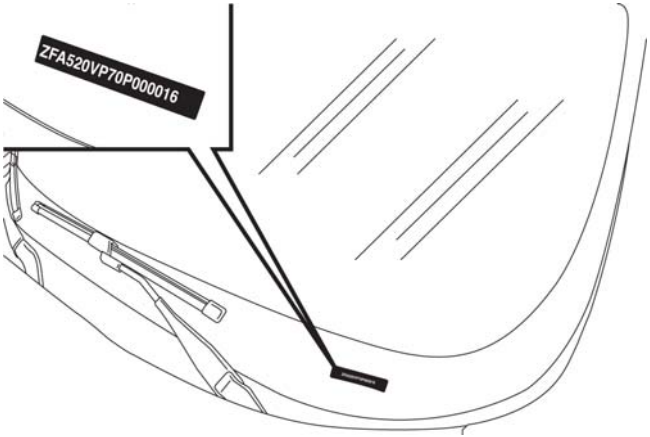

Vehicle Identification Number (VIN)

This number is also stamped on the floor of the passenger compartment, near the right front seat.

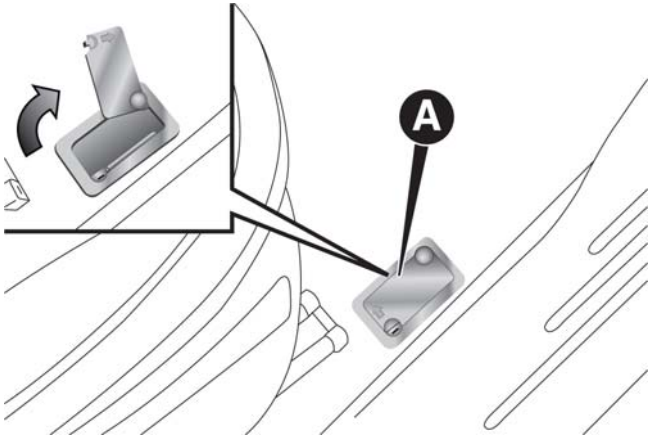

Vehicle Identification Number (VIN)

A. Cover

WHEEL AND TIRE TORQUE SPECIFICATIONS

Proper lug nut/bolt torque is very important to ensure that the wheel is properly mounted to the vehicle. Any time a wheel has been removed and reinstalled on the vehicle the lug nuts/bolts should be torqued using a properly calibrated torque wrench.

Torque Specifications

Lug Nut/Bolt Torque	**Lug Nut/ Bolt Size	Lug Nut/ Bolt Socket Size
89 Ft-Lbs (120 N·m)	M12 x 1.25	17 mm

**Use only your Authorized Dealer recommended lug nuts/bolts and clean or remove any dirt or oil before tightening.

Inspect the wheel mounting surface prior to mounting the tire and remove any corrosion or loose particles.

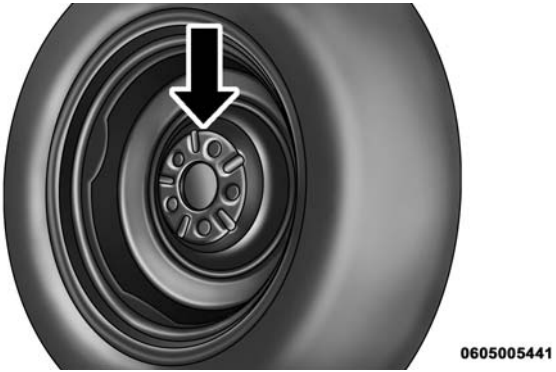

Wheel Mounting Surface

Tighten the lug nuts/bolts in a star pattern until each nut/bolt has been tightened twice.

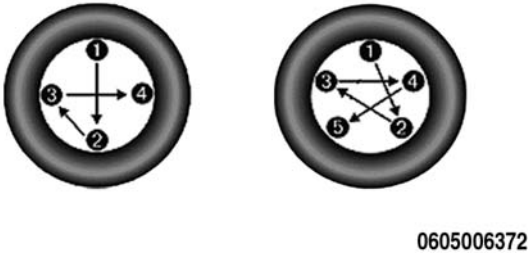

Torque Patterns

After 25 miles (40 km) check the lug nut/bolt torque to be sure that all the lug nuts/bolts are properly seated against the wheel.

WARNING!

To avoid the risk of forcing the vehicle off the jack, do not tighten the lug nuts fully until the vehicle has been lowered. Failure to follow this warning may result in personal injury.

FLUID CAPACITIES

	U.S	Metric
Fuel (Approximate)		
1.4L Turbo/2.4L Engine	12.7 Gallons	48 Liters
Engine Oil With Filter		
1.4L Turbo Engine (SAE 5W-40 Synthetic, API Certified)	4.0 Quarts	3.8 Liters
2.4L Engine (SAE 0W-20, API Certified)	5.5 Quarts	5.2 Liters
Cooling System *		
1.4L Turbo Engine (MOPAR Antifreeze/Engine Coolant 10 Year/150,000 Mile Formula)	5.5 Quarts	5.2 Liters
2.4L Engine (MOPAR Antifreeze/Engine Coolant 10 Year/ 150,000 Mile Formula)	6.8 Quarts	6.5 Liters
* Includes heater and coolant recovery bottle filled to MAX level.		

FLUIDS, LUBRICANTS, AND GENUINE PARTS

Engine

Component	Fluid, Lubricant, or Genuine Part
Engine Coolant	We recommend you use MOPAR Antifreeze/Coolant 10 Year/150,000 Mile Formula OAT (Organic Additive Technology) or equivalent meeting the requirements of FCA Material Standard MS.90032.
Engine Oil – 1.4L Turbo Engine	We recommend you use SAE 5W-40 API Certified Synthetic Engine Oil, meeting the requirements of FCA Material Standard MS-12991 such as MOPAR, Pennzoil, and Shell Helix. Refer to your engine oil filler cap for correct SAE grade.
Engine Oil – 2.4L Engine	We recommend you use SAE 0W-20 API Certified Engine Oil, meeting the requirements of FCA Material Standard MS-6395 such as MOPAR, Pennzoil, and Shell Helix. Refer to your engine oil filler cap for correct SAE grade.
Engine Oil Filter	We recommend you use a MOPAR Engine Oil Filter.
Spark Plugs	We recommend you use MOPAR Spark Plugs.
Fuel Selection – 1.4L Turbo Engine	91 Octane Recommended, 87 Octane Acceptable, 0-15% Ethanol
Fuel Selection – 2.4L Engine	87 Octane, 0-15% Ethanol

Chassis

Component	Fluid, Lubricant, or Genuine Part
Manual Transmission – If Equipped	We recommend you use MOPAR C Series Manual & Dual Dry Clutch Transmission Fluid.
Automatic Transmission – If Equipped	Use only MOPAR ZF 8&9 Speed ATF Automatic Transmission Fluid, or equivalent. Failure to use the correct fluid may affect the function or performance of your transmission.
Power Transfer Unit (PTU) – If Equipped	We recommended you use of synthetic lubricant SAE 75W-90 API GL5
Rear Differential (RDM) – If Equipped	We recommended you use of synthetic lubricant SAE 75W-90 API GL5
Brake Master Cylinder	We recommend you use MOPAR DOT 4. If DOT 4 brake fluid is not available, then DOT 3 is acceptable.

MULTIMEDIA

CONTENTS

- CYBERSECURITY 605
- UCONNECT SETTINGS 606
  - Buttons On The Faceplate 608
  - Buttons On The Touchscreen 608
  - Customer Programmable Features — Uconnect 5.0 Settings 608
  - Customer Programmable Features — Uconnect 6.5AN Settings 624
- UCONNECT RADIOS 640
- USB/MEDIA PLAYER CONTROL — IF EQUIPPED 641
- STEERING WHEEL AUDIO CONTROLS 642
  - Radio Operation 643
  - Media Mode 643
- RADIO OPERATION AND MOBILE DEVICES . .644
  - Regulatory And Safety Information 644
- UCONNECT VOICE RECOGNITION QUICK TIPS 646
  - Introducing Uconnect 646
  - Get Started 647
  - Basic Voice Commands 648

- Radio 650
- Media. 652
- Phone. 653
- Voice Text Reply 655
- Navigation (6.5AN) 656
- Uconnect Access* (6.5A/6.5AN) 657
- Registration (6.5A/6.5AN) 658
- Mobile App (6.5AN) 659
- Voice Texting (6.5AN) 659
- Yelp (6.5AN) 660
- SiriusXM Travel Link (6.5AN). 661
- General Information 662
- Additional Information 663

CYBERSECURITY

Your vehicle may be a connected vehicle and may be equipped with both wired and wireless networks. These networks allow your vehicle to send and receive information. This information allows systems and features in your vehicle to function properly.

Your vehicle may be equipped with certain security features to reduce the risk of unauthorized and unlawful access to vehicle systems and wireless communications. Vehicle software technology continues to evolve over time and FCA US LLC, working with its suppliers, evaluates and takes appropriate steps as needed. Similar to a computer or other devices, your vehicle may require software updates to improve the usability and performance of your systems or to reduce the potential risk of unauthorized and unlawful access to your vehicle systems.

The risk of unauthorized and unlawful access to your vehicle systems may still exist, even if the most recent version of vehicle software (such as Uconnect software) is installed.

WARNING!

- **It is not possible to know or to predict all of the possible outcomes if your vehicle's systems are breached. It may be possible that vehicle systems, including safety related systems, could be impaired or a loss of vehicle control could occur that may result in an accident involving serious injury or death.**

(Continued)

WARNING! ***(Continued)***

- **ONLY insert media (e.g., USB, SD card, or CD) into your vehicle if it came from a trusted source. Media of unknown origin could possibly contain malicious software, and if installed in your vehicle, it may increase the possibility for vehicle systems to be breached.**
- **As always, if you experience unusual vehicle behavior, take your vehicle to your nearest authorized dealer immediately.**

NOTE:

- FCA or your dealer may contact you directly regarding software updates.
- To help further improve vehicle security and minimize the potential risk of a security breach, vehicle owners should:
  - Routinely check www.driveuconnect.com/software-update to learn about available Uconnect software updates.
  - Only connect and use trusted media devices (e.g. personal mobile phones, USBs, CDs).

Privacy of any wireless and wired communications cannot be assured. Third parties may unlawfully intercept information and private communications without your consent. For further information, refer to "Onboard Diagnostic System (OBD II) Cybersecurity" in "Getting To Know Your Instrument Panel" in your Owner's Manual on the DVD.

UCONNECT SETTINGS

The Uconnect system uses a combination of buttons on the touchscreen and buttons on the faceplate located on the center of the instrument panel that allow you to access and change the customer programmable features. Many features can vary by vehicle.

Uconnect 5.0 Buttons On The Touchscreen And Buttons On The Faceplate

1 — Uconnect Buttons On The Touchscreen
2 — Uconnect Buttons On The Faceplate

Uconnect 6.5AN Buttons On The Touchscreen And Buttons On The Faceplate

1 — Uconnect Buttons On The Touchscreen
2 — Uconnect Buttons On The Faceplate

Buttons On The Faceplate

Buttons on the faceplate are located below, and beside the Uconnect system in the center of the instrument panel. In addition, there is a Scroll/Enter control knob located on the right side. Turn the control knob to scroll through menus and change settings (i.e., 30, 60, 90), push the center of the control knob one or more times to select or change a setting (i.e., ON, OFF).

Your Uconnect system may also have Display Off and back arrow buttons on the faceplate.

Push the Display Off button on the faceplate to turn off the Uconnect screen. Push the Display Off button on the faceplate a second time to turn the screen on.

Push the Back Arrow button on the faceplate to exit out of a Menu or certain option on the Uconnect system.

Buttons On The Touchscreen

Buttons on the touchscreen are accessible on the Uconnect touchscreen.

Customer Programmable Features — Uconnect 5.0 Settings

Push the + MORE button on the faceplate, then press the "Settings" button on the touchscreen to display the settings menu screen. In this mode the Uconnect system allows you to access programmable features that may be equipped such as Display, Clock, Safety/Assistance, Lights, Doors & Locks, Engine Off Options, Compass Settings, Audio, Phone/Bluetooth, Radio Setup, Restore Settings and Clear Personal Data.

NOTE: Only one touchscreen area may be selected at a time.

When making a selection, press the button on the touchscreen to enter the desired mode. Once in the desired mode, press and release the preferred setting and make

your selection. Once the setting is complete, either press the Back Arrow button on the touchscreen or the Back button on the faceplate to return to the previous menu or press the "X" button on the touchscreen to close out of the settings screen. Pressing the Up or Down Arrow buttons on the right side of the screen will allow you to toggle up or down through the available settings.

NOTE: All settings should be changed with the ignition in the "MAR/RUN" position.

Display

After pressing the "Display" button on the touchscreen the following settings will be available.

- ***Display Mode***

When in this display you may select the "Auto" or "Manual" display settings. To change Mode status, press and release the "Auto" or "Manual" button on the touchscreen.

- ***Brightness***

When in this display, you may select the overall screen brightness with the headlights on or off. Adjust the brightness with the "+" and "–" setting buttons on the touchscreen or by selecting any point on the scale between the "+" and "–" buttons on the touchscreen.

- ***Language***

When in this display, you may select one of multiple languages (English/Español/Français) for all display nomenclature, including the trip functions and the navigation system (if equipped). Press the "Language" button on the touchscreen, then press the desired language button on the touchscreen.

- *Touchscreen Beep*

When in this display, you may turn on or shut off the sound heard when a touchscreen button is pressed. Press the "Touchscreen Beep" button on the touchscreen until a check-mark appears next to the setting, showing that setting has been selected.

Units

After pressing the "Units" button on the touchscreen you may select each unit of measure independently displayed in the Electronic Vehicle Information System (EVIC) or Driver Information Display (DID). The following selectable units of measure are listed below:

- *US*

Changes the EVIC/DID to US units of measure.

- *Metric*

Changes the EVIC/DID to Metric units of measure.

- *Custom*
- *Distance*
  Select from: "mi" or "km."
- *Fuel Consumption*
  Select from: "MPG" (US), "MPG" (UK), "L/100 km" or "km/L."
- *Pressure*
  Select from: "psi," "kPa," or "bar."
- *Temperature*
  Select from: "°C," or "°F."

Clock & Date

After pressing the "Clock & Date" button on the touchscreen the following settings will be available:

- *Set Time and Format*

When in this display, you may set the time and format manually. Press the "Set Time and Format" button then

choose from a 12 hour or 24 hour format. Press the corresponding arrow above and below the current time to adjust, then select “AM” or “PM.”

- ***Show Time Status***

When in this display, you may turn on or shut off the digital clock in the status bar. To change the Show Time Status setting press the “Show Time Status” button on the touchscreen and select from “ON” or “OFF.”

- ***Set Date***

When in this display, you may set the date manually. Press the “Set Date” button on the touchscreen then press the corresponding arrows above and below the current date to adjust.

- ***Sync Time — If Equipped***

When in this display, you may sync the time with GPS. Press the “Sync Time” button on the touchscreen and select from “ON” or “OFF.”

Safety/Assistance

After pressing the “Safety/Assistance” button on the touchscreen the following settings will be available:

- ***ParkView Backup Camera — If Equipped***

When the vehicle is shifted out of REVERSE (with camera delay turned OFF), the rear camera mode is exited and the navigation or audio screen appears again. When the vehicle is shifted out of REVERSE (with camera delay turned ON), the rear view image with dynamic grid lines will be displayed for up to 10 seconds after shifting out of “REVERSE” unless the forward vehicle speed exceeds 8 mph (13 km/h), the transmission is shifted into PARK or the ignition is switched to the OFF position.

- ***ParkView Backup Camera — If Equipped***
  To change the setting, press the “On” or “Off” button until it is highlighted.

- ***ParkView Backup Camera Delay — If Equipped***

  Press the "Parkview Backup camera Delay" button on the touchscreen to turn the ParkView Delay ON or OFF.

- ***ParkView Backup Camera Active Guide Lines — If Equipped***

  When this feature is enabled, active (dynamic) grid lines are overlaid on the Rear Backup Camera image to illustrate the width of the vehicle and its projected back up path based on the steering wheel position. A dashed center line overlay indicates the center of the vehicle to assist with parking or aligning to a hitch/receiver.

- ***ParkView Backup Camera Fixed Guide Lines — If Equipped***

  When this feature is enabled, fixed (static) grid lines are overlaid on the Rear Backup Camera image to illustrate the width of the vehicle.

- ***Forward Collision Warning-Plus (FCW+) — If Equipped***

The Front Collision Warning (FCW+) feature can be can be set to Far, or set to Near. The default status of FCW+ is the Far setting. This means the system will warn you of a possible collision with the vehicle in front of you when you are farther away. This gives you the most reaction time. To change the setting for a more dynamic driving experience, select the Near setting. This warns you of a possible collision when you are much closer to the vehicle in front of you. To change the FCW+ status, press and release the "Near" or "Far" button.

- ***Forward Collision Warning-Plus (FCW+) Active Braking — If Equipped***

  The FCW+ system includes Advanced Brake Assist (ABA). When this feature is selected, it will apply the brakes to slow your vehicle in case of potential forward collision. The ABA applies additional brake pressure when the driver requests insufficient brake

pressure to avoid a potential frontal collision. The ABA system becomes active at 5 mph (8 km/h).

For further information, refer to "Forward Collision Warning-Plus (FCW+) With Mitigation" in "Safety."

- ***ParkSense — If Equipped***

The ParkSense system will scan for objects behind the vehicle when the transmission shift lever/gear selector is in REVERSE and the vehicle speed is less than 11 mph (18 km/h). It will provide an alert (audible and/or visual) to indicate the proximity to other objects. The system can be enabled with Sound Only, or Sound and Display. To change the ParkSense status, press and release the "Sound Only" or "Sounds and Display" button. Refer to "ParkSense" in "Starting And Operating" for system function and operating information.

- ***Rear ParkSense Volume — If Equipped***
  Rear Park Assist chime volume settings can be selected from the EVIC/DID or Uconnect System (if equipped). The chime volume settings include "LOW," "MEDIUM," and "HIGH." The factory default volume setting is MEDIUM.
- ***Front ParkSense Volume — If Equipped***
  Front Park Assist chime volume settings can be selected from the EVIC/DID or Uconnect System (if equipped). The chime volume settings include "LOW," "MEDIUM," and "HIGH." The factory default volume setting is MEDIUM.
- ***Rear ParkSense Braking Assist — If Equipped***
  When this feature is selected, the park assist system will detect objects located behind the vehicle and utilize autonomous braking to stop the vehicle.

  Refer to "ParkSense Rear Park Assist" in "Starting and Operating" for system function and operating information.

- *LaneSense Warning — If Equipped*

When this feature is selected, it sets the distance at which the steering wheel will provide feedback for potential lane departures. The LDW sensitivity can be set to provide either an "early," "medium," or "late" warning zone start point.

For further information, refer to "LaneSense Warning (LDW)" in "Starting and Operating."

- *LaneSense Strength — If Equipped*

When this feature is selected, it sets the strength of the steering wheel feedback for potential lane departures. The amount of directional torque the steering system can apply to the steering wheel to correct for vehicle lane departure can be set at "Low," "Medium" or "High."

For further information, refer to "Lane Departure Warning (LDW)" in "Starting and Operating."

- *Blind Spot Alert — If Equipped*

When this feature is selected, the Blind Spot Alert feature can be set to Off, Lights or Lights and Chime. The Blind Spot Alert feature can be activated in Lights mode. When this mode is selected, the Blind Spot Monitor (BSM) system is activated and will only show a visual alert in the outside mirrors. When Lights & Chime mode is activated, the Blind Spot Monitor (BSM) will show a visual alert in the outside mirrors as well as an audible alert when the turn signal is on. When Off is selected, the Blind Spot Monitor (BSM) system is deactivated. To change the Blind Spot Alert status, press the "Off," "Lights" or "Lights & Chime" button on the touchscreen. Then press the back arrow button on the touchscreen.

NOTE: If your vehicle has experienced any damage in the area where the sensor is located, even if the fascia is not damaged, the sensor may have become misaligned. Take your vehicle to an authorized dealer to verify sensor alignment. A sensor that is misaligned will result in the BSM not operating to specification.

- *Electric Park Brake Service Mode*

This feature provides a means for a technician or vehicle owner to utilize a vehicle integrated, menu driven system, to command the electric park brake retraction, to service the rear foundation brakes (brake pads, calipers, rotors, etc.).

For further information, refer to "Electric Park Brake (EPD)" in "Starting and Operating."

Lights

After pressing the "Lights" button on the touchscreen the following settings will be available.

- *Headlight Sensitivity*

When this feature is selected, it allows the Headlight Sensitivity to be adjusted according to three levels:

Level 1 = minimum sensitivity

Level 2 = medium sensitivity

Level 3 = maximum sensitivity

NOTE: The greater the sensitivity set, the less the external light variation required to turn on the lights (e.g. with a setting on level 3 at sunset the headlights turn on earlier than in levels 1 and 2). To change the Headlight Sensitivity setting, press the "1," "2" or "3" button on the touchscreen to select your desired Headlight Sensitivity level.

- *Headlight Off Delay*

When this feature is selected, it allows the adjustment of the amount of time the headlights remain on after the engine is shut off. To change the Headlights Off Delay setting, press the Headlights Off Delay button on the touchscreen, and choose either 0 sec, 30 sec, 60 sec or 90 seconds. The selected button will highlight indicating that the setting has been selected.

- *Greeting Lights*

When this feature is selected, it allows the greeting lights to be turned On or Off. To change the Greeting Lights setting, press the "On" or "Off" button on the touchscreen to select your desired Greeting Light setting.

- *Automatic High Beam Headlamps — If Equipped*

When this feature is selected, the high beam headlights will activate/deactivate automatically under certain conditions. To make your selection, press the "Auto High Beams" button on the touchscreen, then select from "On" or "Off."

- *Daytime Running Lights*

When this feature is selected, the headlights will turn on while the engine is running. To make your selection, press the "Daytime Running Lights" button on the touchscreen, then choose "Yes" or "No." The button will highlight indicating that the setting has been selected.

- *Cornering Lights*

When this feature is selected, if the steering wheel rotation angle is large or the turn signal indicators are on, a light (incorporated in the fog light) will turn on, on the relevant side to improve visibility at night. To change the Cornering Lights setting, press the "On" or "Off" button on the touchscreen to select your desired Cornering Lights setting.

- *Flash Lights With Lock — If Equipped*

When this feature is selected, the exterior lights will flash when the doors are locked or unlocked with the Remote Keyless Entry (RKE) transmitter. This feature may be selected with or without the Sound Horn on Lock feature selected. To make your selection, press the "Flash Lights w/Lock" button on the touchscreen, then choose "On" or "Off."

Doors & Locks

After pressing the "Doors & Locks" button on the touchscreen the following settings will be available.

- ***Auto Door Locks***

When this feature is selected, all doors will lock automatically when the vehicle reaches a speed of 12 mph (20 km/h). To make your selection, press the "Auto Door Locks" button on the touchscreen and select from "On" or "Off."

- ***Auto Unlock On Exit***

When this feature is selected, all doors will unlock when the vehicle is stopped and the transmission is in the PARK or NEUTRAL position and the driver's door is opened. To make your selection, press the "Auto Unlock on Exit" button on the touchscreen and select from "On" or "Off."

- ***Flash Lights With Lock***

When this feature is selected, the exterior lights will flash when the doors are locked or unlocked with the Remote Keyless Entry (RKE) transmitter or the Passive Entry Feature. To make your selection, press the "Flash Lights w/Lock" button on the touchscreen and select from "On" or "Off."

- ***Horn With Lock***

When this feature is selected, the horn will sound when the Key Fob Lock button is pressed. To make your selection, press the "Horn w/Lock" button on the touchscreen and select from "Off," "1st Press," or "2nd Press"

- *Horn With Remote Start — If Equipped*

Press the "Horn w/Remote Start" button on the touchscreen to change this display. When this feature is selected, the horn will sound when the remote start is activated. To make your selection, press the "Sound Horn With Remote Start" button on the touchscreen and select "ON" or "OFF."

- *Passive Entry*

This feature allows you to lock and unlock the vehicle's door(s) without having to press the Remote Keyless Entry (RKE) transmitter lock or unlock buttons. To make your selection, press the "Passive Entry" button on the touchscreen and select from "On" or "Off. Refer to "Keyless Enter-N-Go" in "Getting To Know Your Vehicle" for further information.

- *Remote Door Unlock/Door Unlock*

When "Driver" is selected, only the driver's door will unlock on the first push of the Remote Keyless Entry (RKE) transmitter UNLOCK button, you must push the RKE transmitter UNLOCK button twice to unlock the passenger's doors. When "All" is selected, all of the doors will unlock on the first press of the RKE transmitter UNLOCK button.

NOTE: If "All" is programmed, all doors will unlock no matter which Passive Entry equipped door handle is grasped. If "Driver" is programmed, only the driver's door will unlock when the driver's door is grasped. Touching the handle more than once will only result in the driver's door opening once. If the driver door is opened, the interior door lock/unlock switch can be used to unlock all doors (or use RKE transmitter).

Engine Off Options

After pressing the "Engine Off Options" button on the touchscreen the following settings will be available.

- ***Engine Off Power Delay — If Equipped***

When this feature is selected, the power window switches, radio, Uconnect phone system (if equipped), DVD video system (if equipped), power sunroof (if equipped), and power outlets will remain active for up to 10 minutes after the ignition is cycled to OFF. Opening either front door will cancel this feature. To change the Engine Off Power Delay status press the "0 seconds," "45 seconds," "5 minutes" or "10 minutes" button on the touchscreen.

- ***Headlight Off Delay***

When this feature is selected, the driver can choose to have the headlights remain on for 0, 30, 60, or 90 seconds when exiting the vehicle. To change the Headlight Off Delay status press the "+" or "–" button on the touchscreen to select your desired time interval.

- ***Radio Off Delay***

When this feature is selected, the radio will stay on for a preset time after the ignition key is turned to STOP/OFF. To change the Radio Off Delay status, press the "0 MIN" or "20 MIN" button on the touchscreen to select your desired time interval.

Compass Settings — If Equipped

After pressing the "Compass Settings" button on the touchscreen the following settings will be available:

NOTE: Before compass calibration is performed, the compass variance zone should be set for best results.

- *Compass Variance*

Press "Compass Variance" on the touchscreen to change this setting. You will then be able to select a compass variance of 1 through 15 per the compass variance zone map figure.

Compass Variance is the difference between Magnetic North and Geographic North. To compensate for the differences the variance should be set for the zone where the vehicle is being driven, illustrated in the zone map. Once properly set, the compass will automatically compensate for the differences when calibrated, and provide the most accurate compass headings.

Compass Variance Zone Map

- *Compass Calibration*

Press "Compass Calibration" on the touchscreen to enter calibration. To start calibration of the compass, press the "YES" button on the touchscreen and complete one or more 360-degree turns (in an area free from large metal or

metallic objects). A message will appear on the touchscreen when the compass has been successfully calibrated.

NOTE: Keep magnetic materials away from the top of the instrument panel, such as Mobile Phones, Laptops and Radar Detectors. This is where the compass module is located, and it can cause interference with the compass sensor, and it may give false readings.

Audio

After pressing the "Audio" button on the touchscreen the following settings will be available:

- ***Equalizer***

When in this display you may adjust the Bass, Mid and Treble settings. Adjust the settings with the "+" and "–" setting buttons on the touchscreen or by selecting any point on the scale between the "+" and "–" buttons on the touchscreen.

NOTE: Bass/Mid/Treble allow you to simply slide your finger up or down to change the setting as well as press directly on the desired setting.

- ***Balance/Fade***

When in this display you may adjust the Balance and Fade settings.

- ***Speed Adjusted Volume***

This feature increases or decreases volume relative to vehicle speed. To change the Speed Adjusted Volume press the "Off," "1," "2" or "3" button on the touchscreen.

- ***Surround Sound — If Equipped***

This feature provides simulated surround sound mode. To make your selection, press the "Surround Sound" button on the touchscreen, select "On" or "Off".

- *Loudness — If Equipped*

Loudness improves sound quality at lower volumes. To make your selection, press the "Loudness" button on the touchscreen, then choose "Yes" or "No." The button will highlight indicating that the setting has been selected.

- *AUX Volume Offset — If Equipped*

This feature provides the ability to tune the audio level for portable devices connected through the AUX input. To make your selection, press the "AUX Volume Offset" button on the touchscreen, select "On" or "Off".

- *Auto-On Radio*

The Radio automatically turns on when vehicle is in run or will recall whether it was on or off at last ignition off. To make your selection, press the "Loudness" button on the touchscreen, select "On," "Off" or "Recall Last".

Phone/Bluetooth

After pressing the "Phone/Bluetooth" button on the touchscreen the following settings will be available:

- *Paired Phones*

This feature shows which phones are paired to the Phone/Bluetooth system. For further information, refer to the Uconnect Supplement Manual.

SiriusXM Setup — If Equipped

After pressing the "SiriusXM Setup" button on the touchscreen, the following settings will be available:

- *Channel Skip*

SiriusXM can be programmed to designate a group of channels that are the most desirable to listen to or to exclude undesirable channels while scanning. To make your selection, press the "Channel Skip" button on the touchscreen, select the channels you would like to skip.

- *Subscription Information*

New vehicle purchasers or lessees will receive a free limited time subscription to SiriusXM Satellite Radio with your radio. Following the expiration of the free services, it will be necessary to access the information on the Subscription Information screen to re-subscribe.

Press the "Subscription Info" button on the touchscreen to access the Subscription Information screen.

Write down the SIRIUS ID numbers for your receiver. To reactivate your service, either call the number listed on the screen or visit the provider online.

NOTE: SiriusXM Travel Link is a separate subscription and is available for U.S. residents only.

Restore Settings

After pressing the "Restore Settings" button on the touchscreen the following settings will be available:

- *Restore Settings*

When this feature is selected it will reset all settings to their default settings. To restore the settings to their default setting, press the Restore Settings button. A pop-up will appear asking "Are you sure you want to reset your settings to default?" select "Yes" to restore, or "Cancel" to exit. Once the settings are restored, a pop up appears stating "settings reset to default."

Clear Personal Data

After pressing the "Clear Personal Data Settings" button on the touchscreen the following settings will be available:

- *Clear Personal Data*

When this feature is selected it will remove personal data including Bluetooth devices and presets. To remove personal information, press the "Clear Personal Data" button and a pop-up will appear asking "Are you sure you want to clear all personal data?" select "OK" to Clear, or "Cancel" to exit. Once the data has been cleared, a pop up appears stating "Personal data cleared".

Customer Programmable Features — Uconnect 6.5AN Settings

Press the Settings button to display the menu setting screen. In this mode the Uconnect system allows you to access programmable features that may be equipped such as Display, Clock, Safety & Driving Assistance, Lights, Doors & Locks, engine Off Options, Audio, Phone/Bluetooth, SiriusXM Setup, Restore Settings Defaults, Clear Personal Data and System Information.

NOTE:

- Only one touchscreen area may be selected at a time.
- Depending on the vehicles options, feature settings may vary.

When making a selection, press the button on the touchscreen to enter the desired mode. Once in the desired mode, press and release the preferred setting and make your selection. Once the setting is complete, either press the Back Arrow button on the touchscreen to return to the previous menu, or press the "X" button on the touchscreen to close out of the settings screen. Pressing the Up or Down Arrow button on the right side of the screen will allow you to toggle up or down through the available settings.

Display

After pressing the "Display" button on the touchscreen the following settings will be available:

- *Display Mode*

This feature will allow you to select one of the auto display settings. To change Mode status, press and release the "Auto" or "Manual" button on the touchscreen.

NOTE: When Day or Night is selected for the Display Mode, the usage of the Parade Mode feature will cause the radio to activate the Display Brightness Day control even though the headlights are on.

- *Display Brightness With Headlights ON*

This feature will allow you to select the brightness with the headlights on. Adjust the brightness with the "+" and "–" setting buttons on the touchscreen or by selecting any point on the scale between the "+" and "–" buttons on the touchscreen.

- *Display Brightness With Headlights OFF*

When in this display, you may select the brightness with the headlights off. Adjust the brightness with the "+" and "–" setting buttons on the touchscreen or by selecting any point on the scale between the "+" and "–" buttons on the touchscreen.

- *Set Language*

When in this display, you may select one of multiple languages (English/Español/Français) for all display nomenclature, including the trip functions and the navigation system (if equipped). Press the Set Language button on the touchscreen, then press the desired language button on the touchscreen.

- *Touchscreen Beep*

When in this display, you may turn on or shut off the sound heard when a touchscreen button (button on the touchscreen) is pressed. Press the "Touchscreen Beep"

button on the touchscreen. Press the “On” or “Off” button on the touchscreen to turn the Touchscreen Beep ON or OFF.

Units

- ***Units***

When in this display, you may select to have the Electronic Vehicle Information System (EVIC) or Driver Information Display (DID), odometer, and navigation system (if equipped) changed between US and Metric units of measure. Press “US,” “Metric” or “Custom.”

- ***Custom***

When “Custom” is selected, you may select each unit of measure independently displayed in the DID, and navigation system. The following selectable units of measure are listed below:

Distance — Select from: “MI” or “KM.”

Fuel Consumption — Select from: “MPG” (US), “MPG” (UK), L/100 km, or km/L.

Tire Pressure — Select from: “psi”, “kPa”, or “bar.”

Temperature — Select from: “°F” or “°C.”

Voice

After pressing the “Voice” button on the touchscreen the following settings will be available:

- ***Voice Response Length***

When in this display, you may change the Voice Response Length settings. To change the Voice Response Length, press the “Voice Response Length” button on the touchscreen and select from “Brief” or “Detailed.”

- ***Show Command List***

When in this display, you may change the Show Command List settings. To change the Show Command List

settings, press the “Show Command List” button on the touchscreen and select from “Always,” “With Help” or “Never.”

Clock

After pressing the “Clock” button on the touchscreen the following settings will be available:

- ***Show Time In Status Bar***

This feature will allow you to turn on or shut off the digital clock in the status bar. To change the Show Time Status setting press the “On” or “Off” button on the touchscreen.

- ***Sync Time With GPS***

This feature will allow you to automatically have the radio set the time. To change the Sync Time setting, press the “Sync Time with GPS” button on the touchscreen then select from “On” or “Off.” When “On” is selected you can only set the day, month and year. If ″Off″ is selected you can set hour, minutes, format, show time in status bar, day, month, and year.

- ***Set Day***

This feature will allow you to set the day. To make your selection, press the “–” or “+” buttons on the touchscreen to adjust the day up or down.

- ***Set Month***

This feature will allow you to set the month. To make your selection, press the “–” or “+” buttons on the touchscreen to adjust the month up or down.

- ***Set Year***

This feature will allow you to set the year. To make your selection, press the “–” or “+” buttons on the touchscreen to adjust the year up or down.

- *Set Hours*

This feature will allow you to adjust the hours. The Sync Time with GPS "On" button must not be selected. To make your selection, press the "–" or "+" buttons on the touchscreen to adjust the hours up or down.

- *Set Minutes*

This feature will allow you to adjust the minutes. The Sync Time with GPS "On" button must not be selected. To make your selection, press the "–" or "+" buttons on the touchscreen to adjust the minutes up or down.

- *Time Format*

This feature will allow you to select the time format display setting. Press the "Time Format" button on the touchscreen. Press the "12hrs" or "24hrs" button on the touchscreen.

Safety & Driving Assistance

After pressing the "Safety & Driving Assistance" button on the touchscreen the following settings will be available:

- ***Forward Collision Warning-Plus (FCW+) — If Equipped***

The Front Collision Warning (FCW+) feature can be can be set to Far, or Near. The default status of FCW+ is the Far setting. This means the system will warn you of a possible collision with the vehicle in front of you when you are farther away. This gives you the most reaction time. To change the setting for a more dynamic driving experience, select the Near setting. This warns you of a possible collision when you are much closer to the vehicle in front of you. To change the FCW+ status, press the "Fwd Collision Warning" button and select the "Near" or "Far" button.

- ***Forward Collision Warning-Plus (FCW+) Active Braking — If Equipped***

The FCW+ system includes Advanced Brake Assist (ABA). When this feature is selected, it will apply the brakes to slow your vehicle in case of potential forward collision. The ABA applies additional brake pressure when the driver requests insufficient brake pressure to avoid a potential frontal collision. The ABA system becomes active at 5 mph (8 km/h). To change the Active Braking status, press the "Active Braking" button and select the "On" or "Off" button.

For further information, refer to "Forward Collision Warning-Plus (FCW+) With Mitigation" in "Safety."

- ***LaneSense Warning — If Equipped***

When this feature is selected, it sets the distance at which the steering wheel will provide feedback for potential lane departures. The LDW sensitivity can be set to provide either an "early," "medium," or "late" warning zone start point. To change the LaneSense Warning status, press the "LaneSense Warning" button and select from the "Early," "Med," or "Late" buttons.

For further information, refer to "LaneSense Warning (LDW)" in "Starting And Operating."

- ***LaneSense Strength — If Equipped***

When this feature is selected, it sets the strength of the steering wheel feedback for potential lane departures. The amount of directional torque the steering system can apply to the steering wheel to correct for vehicle lane departure can be set at "Low," "Med" or "High." To change the LaneSense Strength status, Press the "LaneSense Strength" button and select from the "Low," "Medium" or "High" buttons.

For further information, refer to "Lane Departure Warning (LDW)" in "Starting And Operating."

- ***ParkSense — If Equipped***

The ParkSense system will scan for objects behind the vehicle when the transmission shift lever/gear selector is in REVERSE and the vehicle speed is less than 11 mph (18 km/h). It will provide an alert (audible and/or visual) to indicate the proximity to other objects. The system can be enabled with Sound Only, or Sound and Display. To change the ParkSense status, press and release the "Off," "Sound Only," or "Sound & Display" button. Refer to "ParkSense" in "Starting And Operating" for system function and operating information.

Refer to "ParkSense Rear Park Assist" in "Starting And Operating" for system function and operating information.

- ***Front ParkSense Volume — If Equipped***

Front Park Assist chime volume settings can be selected from the EVIC or Uconnect System (if equipped). The chime volume settings include "LOW," "MEDIUM," and "HIGH." The factory default volume setting is MEDIUM.

- ***Blind Spot Alert — If Equipped***

When this feature is selected, the Blind Spot Alert feature can be set to Off, Lights or Lights and Chime. The Blind Spot Alert feature can be activated in Lights mode. When this mode is selected, the Blind Spot Monitor (BSM) system is activated and will only show a visual alert in the outside mirrors. When Lights & Chime mode is activated, the Blind Spot Monitor (BSM) will show a visual alert in the outside mirrors as well as an audible alert when the turn signal is on. When Off is selected, the Blind Spot Monitor (BSM) system is deactivated. To change the Blind Spot Alert status, press the "Blind Spot Alert" button and select from "Off," "Lights" or "Lights & Chimes."

NOTE: If your vehicle has experienced any damage in the area where the sensor is located, even if the fascia is not damaged, the sensor may have become misaligned. Take your vehicle to an authorized dealer to verify sensor alignment. A sensor that is misaligned will result in the BSM not operating to specification.

- ***ParkView Backup Camera Active Guidelines — If Equipped***

Your vehicle may be equipped with the ParkView Rear Back Up Camera Active Guidelines that allows you to see active guidelines over the ParkView Back up camera display whenever the shift lever/gear selector is put into REVERSE. The image will be displayed on the radio touchscreen display along with a caution note to "check entire surroundings" across the top of the screen. After five seconds, this note will disappear. To change the Active Guideline Status, press the "Active Guidelines" button and select the "On" or "Off" button.

- ***ParkView Backup Camera Delay***

When the vehicle is shifted out of REVERSE (with camera delay turned OFF), the rear camera mode is exited and the navigation or audio screen appears again. When the vehicle is shifted out of REVERSE (with camera delay turned ON), the rear view image with dynamic grid lines will be displayed for up to 10 seconds after shifting out of "REVERSE" unless the forward vehicle speed exceeds 8 mph (12 km/h), the transmission is shifted into PARK or the ignition is switched to the OFF position. To set the ParkView Backup Camera Delay press the "MORE" button on the faceplate, the "settings" button on the touchscreen, then the "Safety & Driving Assistance" button on the touchscreen. Press the "Parkview Backup camera Delay" button on the touchscreen to turn the ParkView Delay ON or OFF.

- *Brakes*

This feature provides a means for a technician or vehicle owner to utilize a vehicle integrated, menu driven system, to command the electric park brake retraction, to service the rear foundation brakes (brake pads, calipers, rotors, etc.). For further information, refer to "Service Mode (Unlocking rear brake pads)" in "Maintaining And Caring For Your Vehicle."

- *Auto Park Brake*

This feature provides a means for a technician or vehicle owner to enable/disable auto insertion of the Electric Park Brake. For further information, refer to "Auto Park Brake" in "Starting And Operating."

- *Rain Sensing Auto Wipers*

When this feature is selected, the system will automatically activate the windshield wipers if it senses moisture on the windshield. To make your selection, press the "Rain Sensing" button on the touchscreen, and select "On" or "Off." Press the back arrow button on the touchscreen to return to the previous menu.

- *Electric Park Brake Service Mode*

This feature provides a means for a technician or vehicle owner to utilize a vehicle integrated, menu driven system, to command the electric park brake retraction, to service the rear foundation brakes (brake pads, calipers, rotors, etc.).

For further information, refer to "Electric Parking Brake (EPD)" in "Starting and Operating."

Lights

After pressing the "Lights" button on the touchscreen the following settings will be available:

- ***Headlight Sensitivity***

When this feature is selected, it allows the Headlight Sensitivity to be adjusted according to three levels:

Level 1 = minimum sensitivity

Level 2 = medium sensitivity

Level 3 = maximum sensitivity

NOTE: The greater the sensitivity set, the less the external light variation required to turn on the lights (e.g. with a setting on level 3 at sunset the headlights turn on earlier than in levels 1 and 2). To change the Headlight Sensitivity setting, press the "1," "2" or "3" button on the touchscreen to select your desired Headlight Sensitivity level.

- ***Headlight Off Delay***

When this feature is selected, it allows the adjustment of the amount of time the headlights remain on after the engine is shut off. To change the Headlights Off Delay setting, press the Headlights Off Delay button on the touchscreen, and choose either 0 sec, 30 sec, 60 sec or 90 seconds. The selected button will highlight indicating that the setting has been selected.

- ***Greeting Lights***

When this feature is selected, it allows the greeting lights to be turned On or Off. To change the Greeting Lights setting, press the "On" or "Off" button on the touchscreen to select your desired Greeting Light setting.

- *Auto Dim High Beams — If Equipped*

When this feature is selected, the high beam headlights will deactivate automatically under certain conditions. To make your selection, press the "Auto High Beams" button on the touchscreen, then choose "Yes" or "No."

- *Daytime Running Lights*

When this feature is selected, the headlights will turn on while the engine is running. To make your selection, press the "Daytime Running Lights" button on the touchscreen, then choose "Yes" or "No." The button will highlight indicating that the setting has been selected.

- *Cornering Lights*

When this feature is selected, if the steering wheel rotation angle is large or the turn signal indicators are on, a light (incorporated in the fog light) will turn on, on the relevant side to improve visibility at night. To change the Cornering Lights setting, press the "On" or "Off" button on the touchscreen to select your desired Cornering Lights setting.

- *Flash Lights With Lock*

When this feature is selected, the exterior lights will flash when the doors are locked or unlocked with the Remote Keyless Entry (RKE) transmitter. This feature may be selected with or without the Sound Horn on Lock feature selected. To make your selection, press the "Flash Lights with Lock" button on the touchscreen, then choose "On" or "Off."

- *Steering Directed Headlights — If Equipped*

When this feature is selected, the headlights turn relative to a change in direction of the steering wheel. To make your selection, press the "Steering Directed Headlights" button on the touchscreen, then choose "On" or "Off."

- ***Headlights With Wipers — If Equipped***

When this feature is selected, and the headlight switch is in the AUTO position, the headlights will turn on approximately 10 seconds after the wipers are turned on. The headlights will also turn off when the wipers are turned off if they were turned on by this feature. To make your selection, press the "Headlights With Wipers" button on the touchscreen, then choose "On" or "Off."

Doors & Locks

After pressing the "Doors & Locks" button on the touchscreen the following settings will be available:

- ***Auto Door Locks***

When this feature is selected, all doors will lock automatically when the vehicle reaches a speed of 15 mph (24 km/h). To make your selection, press the "Auto Lock" button on the touchscreen, then choose "Yes" or "No." The button will highlight indicating that the setting has been selected.

- ***Auto Unlock On Exit***

When this feature is selected, all doors will unlock when the vehicle is stopped and the transmission is in the PARK or NEUTRAL position and the driver's door is opened. To make your selection, press the "Auto Lock On Exit" button on the touchscreen, then choose "Yes" or "No." The button will highlight indicating that the setting has been selected.

- ***Flash Lights With Lock***

When this feature is selected, the exterior lights will flash when the doors are locked with the Remote Keyless Entry (RKE) transmitter. To make your selection, press the "Flash Headlights With Lock" button on the touchscreen, then choose "Yes" or "No." The button will highlight indicating that the setting has been selected.

- ***Sound Horn With Remote Lock***

When this feature is selected, the horn will sound when the door locks are activated. To make your selection, press the "Sound Horn With Remote Lock" button on the touchscreen, then choose "On" or "Off." The button will highlight indicating that the setting has been selected.

- ***Sound Horn With Start — If Equipped***

When this feature is selected, the horn will sound when the Remote Start is activated. To make your selection, press the "Sound Horn With Remote Start" button on the touchscreen, then choose "On" or "Off." The button will highlight indicating that the setting has been selected.

- ***Remote Door Unlock***

This feature will allow you to program your remote door locks to open "All" or only the "Driver" with the first push of the Remote Keyless Entry (RKE) transmitter or grabbing the Passive Entry door handle. To make your selection, press the "Remote Door Unlock" button on the touchscreen and choose from "All" or "Driver."

NOTE: If "Driver Door" is selected, the (RKE) transmitter will have to be pushed two times in order to unlock all doors.

- ***Passive Entry***

This feature allows you to lock and unlock the vehicles door(s) without having to press the Remote Keyless Entry (RKE) transmitter lock or unlock buttons. To make your selection, press the "Passive Entry" button on the touchscreen, then choose "On" or "Off." The button will highlight indicating that the setting has been selected.

- ***Memory Linked To Key Fob — If Equipped***

This feature provides automatic driver seat positioning to enhance driver mobility when entering and exiting the vehicle. To make your selection, press the "Memory Linked To Key Fob" button on the touchscreen and select from "On" or "Off."

NOTE: The seat will return to the memorized seat location (if Recall Memory with Remote Key Unlock is set to ON) when the Remote Keyless Entry (RKE) transmitter is used to unlock the door.

Engine Off Options

After pressing the "Engine Off Options" button on the touchscreen the following settings will be available:

- ***Radio Off Delay***

When this feature is selected, the radio will stay on for a preset time after the ignition key is turned to STOP/OFF. To change the Radio Off Delay status, press the "0 MIN" or "20 MIN" button on the touchscreen to select your desired time interval.

- ***Headlight Off Delay — If Equipped***

When this feature is selected, the driver can choose to have the headlights remain on for 0, 30, 60, or 90 seconds when exiting the vehicle. To change the Headlight Off Delay status press the "+" or "–" button on the touchscreen to select your desired time interval.

- ***Engine Off Power Delay — If Equipped***

When this feature is selected, the power window switches, radio, Uconnect phone system (if equipped), DVD video system (if equipped), power sunroof (if equipped), and power outlets will remain active for up to 10 minutes after the ignition is cycled to OFF. Opening either front door will cancel this feature. To change the Engine Off Power Delay status press the "0 seconds," "45 seconds," "5 minutes" or "10 minutes" button on the touchscreen.

Audio

After pressing the "Audio" button on the touchscreen the following settings will be available:

- ***Balance/Fade***

When in this display you may adjust the Balance and Fade settings. Press and drag the speaker icon, use the arrows to adjust, or tap the speaker icon to readjust to the center.

- ***Equalizer***

When in this display you may adjust the Bass, Mid and Treble settings. Adjust the settings with the "+" and "–" buttons on the touchscreen or by selecting any point on the scale between the "+" and "–" buttons on the touchscreen.

NOTE: Bass/Mid/Treble allow you to simply slide your finger up or down to change the setting as well as press directly on the desired setting.

- ***Speed Adjusted Volume***

This feature increases or decreases volume relative to vehicle speed. To change the Speed Adjusted Volume press the "Off," "1," "2" or "3" button on the touchscreen.

- ***Surround Sound — If Equipped***

This feature provides simulated surround sound mode. To make your selection, press the "Surround Sound" button on the touchscreen, select On or Off.

- ***Loudness — If Equipped***

Press the "On" button to activate Loudness. Press "Off" to deactivate this feature. When Loudness is On, the loudness setting increases dynamic range of audio at higher volumes.

- ***AUX Volume Offset — If Equipped***

This feature provides the ability to tune the audio level for portable devices connected through the AUX input.

To make your selection, press the "AUX Volume Offset" button on the touchscreen, select any point on the scale between the "+" and "–" buttons on the touchscreen.

- *Auto-On Radio*

The Radio automatically turns on when vehicle is in run or will recall whether it was on or off at last ignition off. To make your selection, press the "Loudness" button on the touchscreen, select "On," "Off" or "Recall Last".

Phone/Bluetooth

After pressing the "Phone/Bluetooth" button on the touchscreen the following settings will be available:

- *Paired Phones*

This feature shows which mobile phones are paired to the Phone/Bluetooth system.

- *Paired Audio Sources*

This feature shows which audio devices are paired to the Phone/Bluetooth system.

SiriusXM Setup — If Equipped

After pressing the "SiriusXM Setup" button on the touchscreen, the following settings will be available:

- *Channel Skip*

SiriusXM can be programmed to designate a group of channels that are the most desirable to listen to or to exclude undesirable channels while scanning. To make your selection, press the "Channel Skip" button on the touchscreen, select the channels you would like to skip.

- *Subscription Information*

New vehicle purchasers or lessees will receive a free limited time subscription to SiriusXM Satellite Radio with your radio. Following the expiration of the free services, it will be necessary to access the information on the Subscription Information screen to re-subscribe.

Press the "Subscription Info" button on the touchscreen to access the Subscription Information screen.

Write down the SIRIUS ID numbers for your receiver. To reactivate your service, either call the number listed on the screen or visit the provider online.

NOTE: SiriusXM Travel Link is a separate subscription and is available for U.S. residents only.

Restore Settings Defaults

After pressing the "Restore Settings Defaults" button on the touchscreen the following settings will be available:

- ***Restore Settings***

When this feature is selected it will reset Display, Clock, Audio, and Radio Settings to their default. Once in the desired mode, press and release the preferred setting and make your selection.

Clear Personal Data

After pressing the "Clear Personal Data Settings" button on the touchscreen the following settings will be available:

- ***Clear Personal Data***

When this feature is selected it will remove personal data including Bluetooth devices and presets. To Clear Personal Data press the "Yes" or "No" button on the touchscreen.

UCONNECT RADIOS

For detailed information about your Uconnect 3.0, 5.0 or 6.5AN radio, refer to your Uconnect Supplement Manual.

USB/MEDIA PLAYER CONTROL — IF EQUIPPED

This feature allows an external device to be plugged into the USB port or AUX Jack.

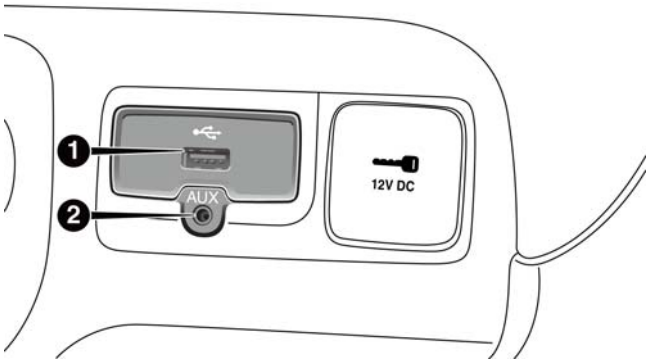

Front USB Port And AUX Jack

1 — USB Port
2 — AUX/Cable Jack

Located below the heating ventilation and air conditioning controls is the front USB port.

Refer to the Uconnect Radio Supplement for external USB support capability.

Center Console USB Port

Located in the center console is a second USB port.

NOTE: Depending on vehicle configuration, the USB port may be charge only, or media file capable.

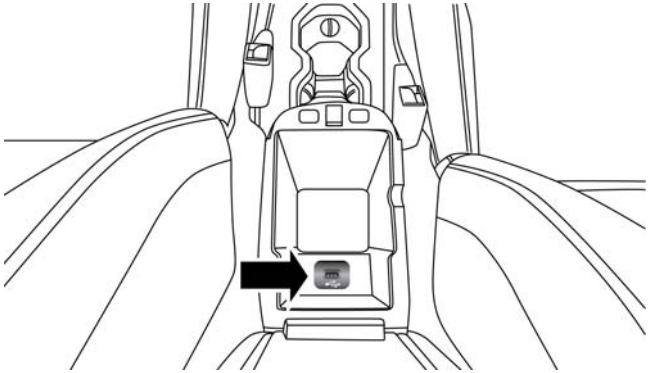

Center Console USB (Charge Only) Port — If Equipped

STEERING WHEEL AUDIO CONTROLS

The remote sound system controls are located at the rear of the steering wheel. Reach behind the wheel to access the switches.

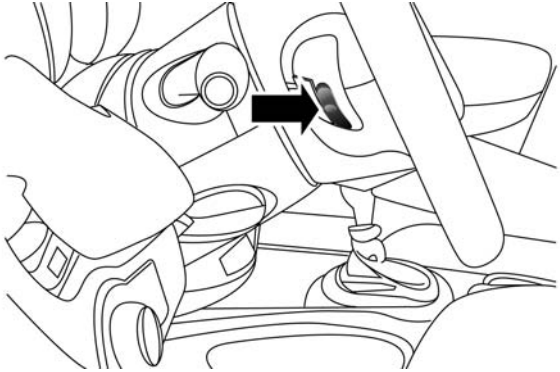

Remote Sound System Controls (Back View Of Steering Wheel)

The right-hand control is a rocker-type switch with a pushbutton in the center and controls the volume and mode of the sound system. Pushing the top of the rocker switch will increase the volume, and pushing the bottom of the rocker switch will decrease the volume.

Pushing the center button will make the radio switch between the various modes available (AM/FM/SAT/AUX/Media Player, etc.) and can also be used to select/enter an item while scrolling through menu.

The left-hand control is a rocker-type switch with a pushbutton in the center. The function of the left-hand control is different depending on which mode you are in.

The following describes the left-hand control operation in each mode.

Radio Operation

Pushing the top of the switch will “Seek” up for the next listenable station and pushing the bottom of the switch will “Seek” down for the next listenable station.

The button located in the center of the left-hand control will tune to the next preset station that you have programmed in the radio preset button.

Media Mode

Pushing the top of the switch once will go to the next track on the selected media (AUX/USB, Bluetooth). Pushing the bottom of the switch once will go to the beginning of the current track, or to the beginning of the previous track if it is within eight seconds after the current track begins to play.

If you push the switch up or down twice, it plays the second track; three times, it will play the third, etc.

RADIO OPERATION AND MOBILE DEVICES

Under certain conditions, the mobile device being on in your vehicle can cause erratic or noisy performance from your radio. This condition may be lessened or eliminated by relocating the mobile device antenna. This condition is not harmful to the radio. If your radio performance does not satisfactorily "clear" by the repositioning of the antenna, it is recommended that the radio volume be turned down or off during mobile device operation when not using Uconnect (if equipped).

Regulatory And Safety Information

USA/CANADA

Exposure to Radio Frequency Radiation

The radiated output power of the internal wireless radio is far below the FCC radio frequency exposure limits. Nevertheless, the wireless radio will be used in such a manner that the radio is 20 cm or further from the human body.

The internal wireless radio operates within guidelines found in radio frequency safety standards and recommendations, which reflect the consensus of the scientific community.

The radio manufacturer believes the internal wireless radio is safe for use by consumers. The level of energy emitted is far less than the electromagnetic energy emitted by wireless devices such as mobile phones. However, the use of wireless radios may be restricted in some situations or environments, such as aboard airplanes. If you are unsure of restrictions, you are encouraged to ask for authorization before turning on the wireless radio.

This device complies with Part 15 of the FCC Rules and with Industry Canada license-exempt RSS standard(s). Operation is subject to the following two conditions:

1. This device may not cause harmful interference.
2. This device must accept any interference received, including interference that may cause undesired operation.

NOTE:

- This equipment has been tested and found to comply with the limits for a Class B digital device, pursuant to Part 15 of the FCC Rules. These limits are designed to provide reasonable protection against harmful interference in a residential installation. This equipment generates, uses and can radiate radio frequency energy and, if not installed and used in accordance with the instructions, may cause harmful interference to radio communications. However, there is no guarantee that interference will not occur in a particular installation.
- If this equipment does cause harmful interference to radio or television reception, which can be determined by turning the equipment off and on, the user is encouraged to try to correct the interference by one or more of the following measures:
- Increase the separation between the equipment and receiver.
- Consult the dealer or an experienced radio technician for help.

UCONNECT VOICE RECOGNITION QUICK TIPS

Introducing Uconnect

Start using Uconnect Voice Recognition with these helpful quick tips. It provides the key Voice Commands and tips you need to know to control your Uconnect 3.0, 5.0 or 6.5AN system.

Uconnect 3.0

Uconnect 5.0

Uconnect 6.5AN

Get Started

All you need to control your Uconnect system with your voice are the buttons on your steering wheel.

1. Visit **UconnectPhone.com to check mobile device and feature compatibility and to find phone pairing instructions.**
2. Reduce background noise. Wind and passenger conversations are examples of noise that may impact recognition.
3. Speak clearly at a normal pace and volume while facing straight ahead. The microphone is positioned on the rearview mirror and aimed at the driver.
4. Each time you give a Voice Command, you must first push either the VR or Phone button, wait until **after** the beep, then say your Voice Command.

5. You can interrupt the help message or system prompts by pushing the VR or Phone button and saying a Voice Command from current category.

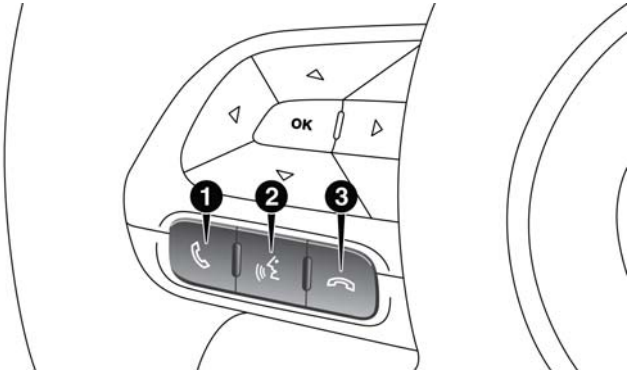

Uconnect Voice Command Buttons

1 — Push To Initiate Or To Answer A Phone Call, Send Or Receive A Text
2 — Push To Begin Radio, Navigation, Or Media functions
3 — Push To End Call

Basic Voice Commands

The basic Voice Commands below can be given at any point while using your Uconnect system.

Push the VR button . After the beep, say...

- **Cancel** to stop a current voice session.
- **Help** to hear a list of suggested Voice Commands.
- **Repeat** to listen to the system prompts again.

Notice the visual cues that inform you of your voice recognition system's status. Cues appear on the touch-screen.

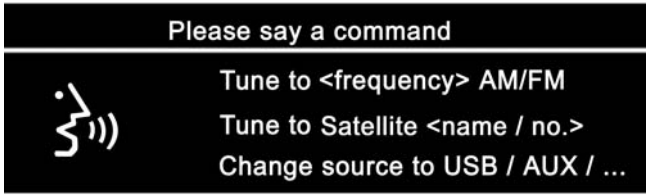

0415077826

Uconnect 3.0

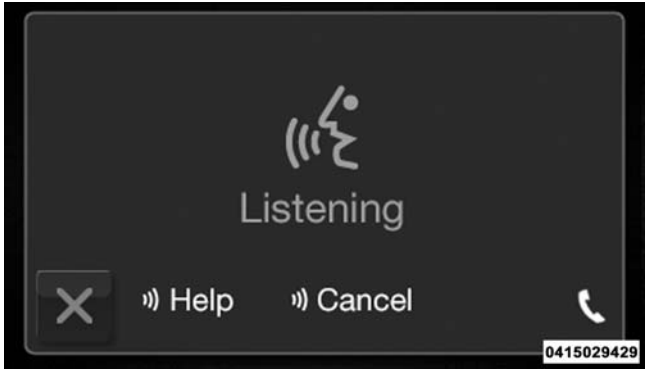

Uconnect 5.0

Uconnect 6.5AN

Radio

Use your voice to quickly get to the AM, FM or SiriusXM Satellite Radio stations you would like to hear. (Subscription or included SiriusXM Satellite Radio trial required.)

Push the VR button . After the beep, say...

- **Tune to** ninety-five-point-five FM.
- **Tune to** Satellite Channel Hits 1.

TIP: At any time, if you are not sure of what to say or want to learn a Voice Command, press the VR button and say **"Help."** The system will provide you with a list of commands.

Uconnect 5.0 Radio

Uconnect 6.5AN Radio

Media

Uconnect offers connections via USB Port, Bluetooth and Auxiliary Ports (If Equipped). Voice operation is only available for connected USB and iPod devices. (Remote CD player optional and not available on all vehicles.)

Push the VR button . After the beep, say one of the following commands and follow the prompts to switch your media source or choose an artist.

- **Change source** to Bluetooth.
- **Change source** to iPod.
- **Change source** to USB.
- **Play artist** Beethoven; **Play album** Greatest Hits; **Play song** Moonlight Sonata; **Play genre** Classical.

TIP: For the Uconnect 5.0 and 6.5AN systems, press the Browse button on the touchscreen to see all of the music on your iPod or USB device. Your Voice Command must match **exactly** how the artist, album, song and genre information is displayed.

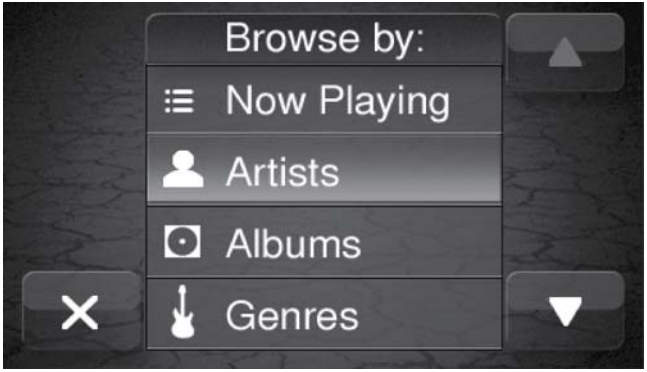

Uconnect 5.0 Media

Uconnect 6.5AN Media

Phone

Making and answering hands-free phone calls is easy with Uconnect. When the Phonebook button is illuminated on your touchscreen, your system is ready. Check UconnectPhone.com for mobile phone compatibility and pairing instructions.

Push the Phone button . After the beep, say one of the following commands...

- **Call** John Smith.
- **Dial** 123-456-7890 and follow the system prompts.
- **Redial** (call previous outgoing phone number).
- **Call back** (call previous incoming phone number).

TIP: When providing a Voice Command, push the Phone button and say **"Call,"** then pronounce the name **exactly** as it appears in your phone book. When a contact has multiple phone numbers, you can say **"Call** John Smith **work."**

Uconnect 5.0 Phone

Uconnect 6.5AN Phone

Voice Text Reply

Uconnect will announce **incoming** text messages. Push the Phone button and say **"Listen."** (Must have compatible mobile phone paired to Uconnect system.)

1. Once an incoming text message is read to you, push the Phone button . After the beep, say: **"Reply."**
2. Listen to the Uconnect prompts. After the beep, repeat one of the pre-defined messages and follow the system prompts.

PRE-DEFINED VOICE TEXT REPLY RESPONSES

Yes.	Stuck in Traffic.	See you later.
No.	Start without me.	I'll be Late.
Okay.	Where are you?	I will be <number> minutes late.
Call me.	Are you there yet?	

PRE-DEFINED VOICE TEXT REPLY RESPONSES

I'll call you later.	I need directions.	See you in <number> of minutes.
I'm on my way.	Can't talk right now.	
I'm lost.		Thanks.

TIP: Your mobile phone must have the full implementation of the **Message Access Profile (MAP)** to take advantage of this feature. For details about MAP, visit UconnectPhone.com. Apple iPhone iOS6 or later supports reading **incoming** text messages only.

Navigation (6.5AN)

The Uconnect navigation feature helps you save time and become more productive when you know exactly how to get to where you want to go.

1. To enter a destination, push the VR button . After the beep, say:
   - For the 6.5AN Uconnect System, say: **"Navigate to** 800 Chrysler Drive Auburn Hills, Michigan."
2. Then follow the system prompts.

TIP: To start a POI search, push the VR button . After the beep, say: " **Find nearest** coffee shop."

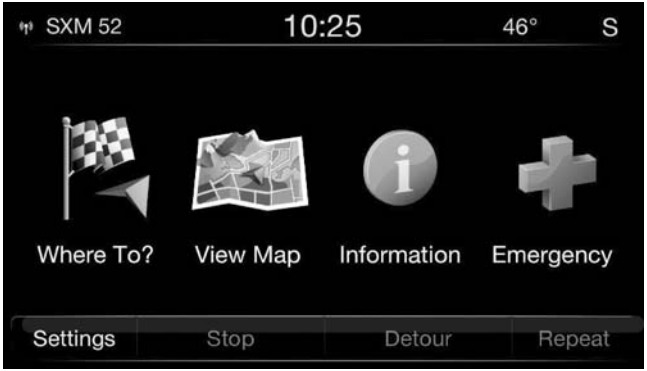

Uconnect 6.5AN Navigation

Uconnect Access* (6.5A/6.5AN)

WARNING!

Some Uconnect Access services, including 9-1-1 and assist will NOT work without an operable 1X (voice/data) or 3G (data) network connection.

NOTE: Your vehicle may be transmitting data as authorized by the subscriber.

An included trial and/or subscription is required to take advantage of the Uconnect Access services in the next section of this guide. To register with Uconnect Access, push the MORE button below the 6.5-inch touchscreen to get started. Detailed registration instructions can be found on the next page.

*Uconnect Access is available only on equipped vehicles purchased within the continental United States, Alaska and Hawaii. Services can only be used where coverage is available; see coverage map for details.

- 9-1-1 Call
- Security Alarm Notification
- Remote Door Lock/Unlock
- Stolen Vehicle Assistance
- Remote Vehicle Start**
- Remote Horn and Lights
- Yelp Search
- Voice Texting
- Roadside Assistance Call
- Wi-Fi Hotspot***

**If vehicle is equipped.

***Extra charges apply.

Registration (6.5A/6.5AN)

1. Push the ASSIST button located in the overhead console.

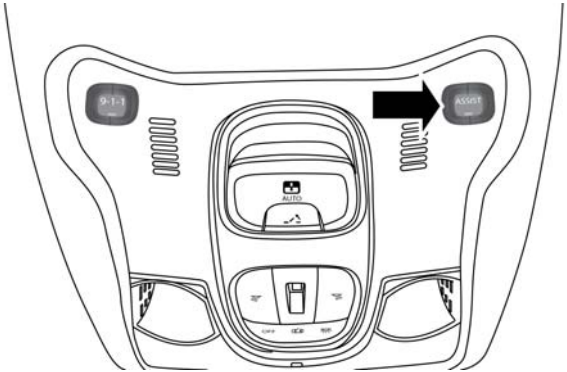

2. Press the "Uconnect Care" button on the touchscreen.
3. A helpful Uconnect Care Agent will register your vehicle and handle all of the details.

Signing up is easy! Simply follow the steps above. Or, press the "Apps" button on the touchscreen to "Register By Web" to complete the process using your wireless device or computer.

For further information please visit DriveUconnect.com.

Mobile App (6.5AN)

You're only a few steps away from using remote commands and playing your favorite music in your vehicle.

0307077996

Mobile App

To link your internet radio accounts:

1. Download the Uconnect Access App from the App Store or Google Play.
2. Open the app and tap Create Account.
3. Enter your email address and click Next.
4. Once your email address is verified, enter a password and full name to create an account.

NOTE: Once you download the App to your compatible mobile device, you will also be able to start your vehicle and lock/unlock its doors from virtually anywhere. For further information please visit DriveUconnect.com.

Voice Texting (6.5AN)

1. To send a message, push the Phone button . After the beep, say the following command: **"Send message** to John Smith."

2. Listen to the prompt. After the beep, dictate the message you would like to send. Wait for Uconnect to process your message.
3. The Uconnect system will repeat your message and provide a variety of options to add to, delete, send or hear the message again. After the beep, tell Uconnect what you'd like to do. For instance, if you're happy with your message, after the beep, say: **"Send."**

You must be registered with Uconnect Access and have a compatible MAP – enabled smartphone to use your voice to send a personalized text message.

TIP:

- Not compatible with iPhone.
- Messages are limited to 140 characters.
- The Messaging button on the touchscreen must be illuminated to use the feature.

Yelp (6.5AN)

Once registered with Uconnect Access, you can use your voice to search for the most popular places or things around you.

1. Push the MORE button on the faceplate.
2. Press the "Apps" button then the "All Apps" button on the touchscreen.
3. Press the "Yelp" button on the touchscreen.
4. Once the YELP home screen appears, push the VR button , then say: **"YELP search."**
5. Listen to the system prompts and after the beep, tell Uconnect the place or business that you'd like Uconnect to find.

TIP: Once you perform a search, you can reorganize the results by selecting either the Best Match, Rating or Distance tab on the top of the touchscreen display.

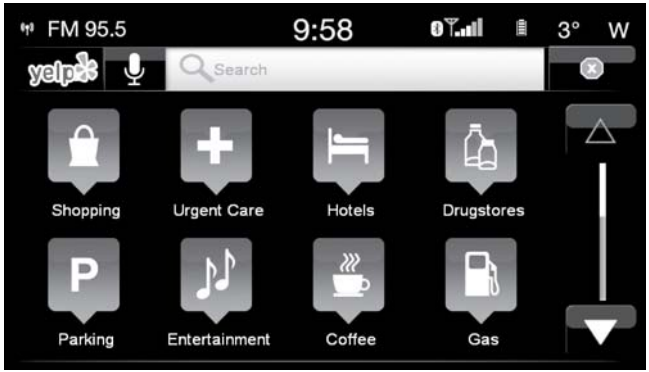

Yelp

SiriusXM Travel Link (6.5AN)

Need to find a gas station, view local movie listings, check a sports score or the 5 - day weather forecast? SiriusXM Travel Link is a suite of services that brings a wealth of information right to your Uconnect 6.5AN system.

Push the VR button . After the beep, say one of the following commands:

- **Show fuel prices**.
- **Show 5 - day weather forecast**.
- **Show extended weather**.

TIP: Traffic alerts are not accessible with Voice Command.

SiriusXM Travel Link

General Information

This device complies with FCC rules Part 15 and Industry Canada RSS-210. Operation is subject to the following two conditions:

1. This device may not cause harmful interference.
2. This device must accept any interference that may be received including interference that may cause undesired operation.

NOTE:

- The transmitter has been tested and it complies with FCC and IC rules. Changes or modifications not expressly approved by the party responsible for compliance could void the user's authority to operate the device.
- The term IC before the certification/registration number only signifies that Industry Canada technical specifications were met.

Additional Information

© 2015 FCA US LLC. All rights reserved. Mopar and Uconnect are registered trademarks and Mopar Owner Connect is a trademark of FCA US LLC. Android is a trademark of Google Inc. SiriusXM and all related marks and logos are trademarks of SiriusXM Radio Inc. Yelp, Yelp logo, Yelp burst and related marks are registered trademarks of Yelp.

Uconnect System Support:

- U.S. residents call 1-877-855-8400 (24 hours a day 7 days a week) or visit DriveUconnect.com
- Canadian residents call 1-800-465-2001 (English) or 1-800-387-9983 (French) or visit DriveUconnect.ca
- Mon. – Fri., 8:00 am – 8:00 pm, ET
- Sat., 9:00 am – 5:00 pm, ET
- Sun., Closed

Uconnect Access Services Support 1-855-792-4241. Please have your Uconnect Security PIN ready when you call.

INDEX

About Your Brakes 239
ABS (Anti-Lock Brake System) 241
Adding Engine Coolant (Antifreeze) 549
Adding Fuel 405
Adding Washer Fluid 545
Additives, Fuel 403
Air Bag 274
  Advance Front Air Bag 274, 276
  Air Bag Operation 277
  Air Bag Warning Light 287
  Driver Knee Air Bag 279
  Event Data Recorder (EDR) 290
  Front Air Bag 274
  If A Deployment Occurs 284
  Knee Impact Bolsters 278
  Maintaining Your Air Bag System 289
  Redundant Air Bag Warning Light 289
  Side Air Bags 279
  Transporting Pets 312
Air Bag Deployment 274
Air Bag Light 187, 287, 314
Air Bag Maintenance 289
Air Cleaner, Engine (Engine Air Cleaner Filter) 539
Air Conditioner Maintenance 122, 135, 540
Air Conditioning 119, 132
Air Conditioning Controls 119
Air Conditioning Filter 541
Air Conditioning Refrigerant 540, 541
Air Conditioning System 119, 540
Air Pressure, Tires 580
Air Recirculation 122, 131
Alarm
  Arm The System 52
Alarm (Security Alarm) 51, 190
Alarm System (Security Alarm) 51
Alterations/Modifications, Vehicle 7
Antifreeze (Engine Coolant) 548, 600
  Disposal 551

Anti-Lock Brake System (ABS) 241
Anti-Lock Warning Light 208
Appearance Care 558
Arming System (Security Alarm) 51
Assist, Hill Start 246
Audio Systems (Radio) 640
Auto Down Power Windows 115
Automatic Headlights 98
Automatic Temperature Control (ATC)
SYNC Temperature Button 131
Automatic Transmission 339, 556, 558
Adding Fluid 558, 602
Fluid And Filter Changes 558
Fluid Change 558
Fluid Level Check 557
Fluid Type 556, 602
Special Additives 557
Auto Up Power Windows 115
Auxiliary Electrical Outlet (Power Outlet) 166
Auxiliary Power Outlet 166
Axle Fluid 602
Axle Lubrication 602

Battery 192, 539
Charging System Light 192
Belts, Seat. 314
Blind Spot Monitoring. 87
Body Mechanism Lubrication 542
B-Pillar Location 573
Brake Assist System 244
Brake Fluid 602
Brakes 239, 553
Brake System 239, 553
Anti-Lock (ABS) 241
Fluid Check 602
Master Cylinder 553
Warning Light 188
Brightness, Interior Lights 107

Bulbs, Light 316

Camera, Rear 386
Capacities, Fluid 600
Caps, Filler
  Oil (Engine) 537
Carbon Monoxide Warning 313, 405
Car Washes 559
Certification Label. 409
Changing A Flat Tire. 483, 565
Chart, Tire Sizing 568
Check Engine Light (Malfunction Indicator Light) . .522
Checking Your Vehicle For Safety 312
Checks, Safety 312
Child Restraint 291
Child Restraints
  Booster Seats 296
  Child Restraints 291
  Child Seat Installation 309
  How To Stow An Unused ALR Seat Belt 305
  Infants And Child Restraints 294
  Install A LATCH-Compatible Child Restraint 304
  Installing Child Restraints Using The Vehicle Seat Belt 306
  LATCH Positions 299
  Locating The LATCH Anchorages 302
  Lower Anchors And Tethers For Children 298
  Older Children And Child Restraints 294
  Seating Positions 297
Child Safety Locks 65
Clean Air Gasoline 401
Cleaning
  Wheels 560
  Windshield Wiper Blades 542
Climate Control 117
  Automatic 123, 127, 128, 134
  Manual 117
Clutch 553

Clutch Fluid 553
Coin Holder 171
Cold Weather Operation 323
Connector
UCI 641
Universal Consumer Interface (UCI) 641
Console 171
Console, Floor 171
Contract, Service. 13
Cooling System. 547
Adding Coolant (Antifreeze) 549
Coolant Capacity 600
Coolant Level 548, 552
Disposal Of Used Coolant 551
Drain, Flush, And Refill 548
Inspection 552
Points To Remember 551, 552
Pressure Cap 551
Selection Of Coolant (Antifreeze) 548, 600, 601
Corrosion Protection 558
Cruise Light. 212, 214
Cupholders 172
Customer Assistance 11
Customer Programmable Features 608

Data Recorder, Event. 290
Daytime Running Lights 98
Dealer Service. 523
Defroster, Rear Window 111, 121, 134
Defroster, Windshield. 120, 133, 314
Dimmer Switch, Headlight. 101
Disabled Vehicle Towing 514
Disposal
Antifreeze (Engine Coolant) 551
Door Ajar 195, 196
Door Ajar Light 195, 196
Door Locks
Door Locks 54

Key Fob 54
Remote 54
Remote Keyless Entry (RKE) 54
Driver Information Display (DID)
Instrument Cluster 221
Oil Change 221
Driver's Seat Back Tilt 67
Driving 411

Electrical Outlet, Auxiliary (Power Outlet) 166
Electric Park Brake 327
Electric Parking Brake 327
Electronic Roll Mitigation (ERM) 245
Electronic Speed Control (Cruise Control) 351
Electronic Stability Control (ESC) 240, 250
Electronic Throttle Control Warning Light 193
Electronic Vehicle Information Center (EVIC) 386
Electronic Vehicle Information Center (EVIC) 216
Emergency, In Case Of
Hazard Warning Flasher 435
Jacking 483, 565
Jump Starting 499
Overheating 506
Tow Hooks 516
Towing 514
Emission Control System Maintenance 522
Engine
Air Cleaner 539
Break-In Recommendations 326
Checking Oil Level 535
Compartment 533
Coolant (Antifreeze) 601
Cooling 547
Exhaust Gas Caution 313, 405
Fails To Start 322
Flooded, Starting 322
Fuel Requirements 400

Jump Starting 499
Oil 535, 600, 601
Oil Filler Cap 537
Oil Filter 538
Oil Selection 537, 600
Overheating 506
Starting 321
Engine Oil Viscosity 537
Engine Oil Viscosity Chart 537
Ethanol 402
Event Data Recorder 290
Exhaust Gas Caution 313, 405
Exhaust System 313, 545
Exterior Lighting 97
Exterior Lights. 97, 316

Filters
Air Cleaner 539
Air Conditioning 541
Engine Oil 538, 601
Engine Oil Disposal 538
Flashers
Hazard Warning 435
Turn Signal 101, 211, 316
Flash-To-Pass 100
Flooded Engine Starting 322
Floor Console 171
Fluid, Brake 602
Fluid Capacities 600
Fluid Leaks 316
Fluids, Lubricants And Genuine Parts 601
Fog Lights 99
Forward Collision Warning 360
Freeing A Stuck Vehicle 512
Fuel. 400
Adding 405
Additives 403
Clean Air 401

Ethanol 402
Gasoline 400
Light 206
Materials Added 403
Methanol 402
Octane Rating 400, 601
Requirements 400
Specifications 601
Tank Capacity 600

Gasoline, Clean Air 401
Gasoline (Fuel) 400
Gasoline, Reformulated 401
Gear Ranges 336
Gear Select Lever Override 507
General Information 370
General Maintenance 535
Glass Cleaning 563
Gross Axle Weight Rating 418
Gross Vehicle Weight Rating 417
GVWR 409

Hazard Warning Flasher 435
Headlights
Automatic 98
Cleaning 563
Delay 99
High Beam/Low Beam Select Switch 101
Lights On Reminder 99
Passing 100
Switch 97
Time Delay 99
Head Restraints 78
Head Rests 78
Heated Mirrors 87
Heater 119
High Beam/Low Beam Select (Dimmer) Switch 101
Hill Descent Control 247

Hill Descent Control Indicator 247
Hill Start Assist. 246
Hitches
  Trailer Towing 420
Holder, Coin. 171
Holder, Cup 172
Hood Prop 150
Hood Release 150

Ignition
  Key 41
Ignition Key Removal 509
Immobilizer (Sentry Key) 50
Inside Rearview Mirror. 83, 435
Instrument Cluster 179, 191, 194, 207, 211
  Instrument Cluster 221
Instrument Panel Cover. 563
Instrument Panel Lens Cleaning 564
Interior And Instrument Lights. 102
Interior Appearance Care. 562
Interior Lights 102
Intermittent Wipers (Delay Wipers). 108
Introduction 4
Inverter, Power 168

Jacking Instructions. 486
Jack Location 484
Jack Operation. 483, 486, 565
Jump Starting 499

Key Fob
  Arm The Alarm 52
  Keyless Entry 58
  Programming Additional Key Fobs 40
  Programming Additional Transmitters 40
Keyless Enter-N-Go 58
  Enter The Trunk 58
  Key Fob 58

Lock The Vehicle's Doors 58, 635
Passive Entry 58
Passive Entry Programming 58, 635
Remote Control 58
Unlock From The Driver's Side 58
Unlock From The Passenger Side 58
Unlock Liftgate 635
Keyless Entry System 31
Key, Replacement 40
Keys. 31, 41
Key, Sentry (Immobilizer) 50

Lane Change And Turn Signals 101
LaneSense 370
Lap/Shoulder Belts 261
Latches 316
Lead Free Gasoline 400
Leaks, Fluid 316
Life Of Tires 586
Liftgate 152
Liftgate Window Wiper/Washer 111
Light Bulbs. 316
Lights 316
Air Bag 187, 287, 314
Automatic Headlights 98
Brake Assist Warning 255
Brake Warning 188
Cruise 212, 214
Daytime Running 98
Dimmer Switch, Headlight 101
Engine Temperature Warning 194
Exterior 316
Fog 99
Hazard Warning Flasher 435
Headlights 97
Headlights On Reminder 99
Headlight Switch 97
High Beam 101

High Beam/Low Beam Select 101
Hill Descent Control Indicator 247
Instrument Cluster 97
Intensity Control 107
Interior 102
Lights On Reminder 99
Low Fuel 206
Malfunction Indicator (Check Engine) 204
Park 211
Passing 100
Seat Belt Reminder 186
Security Alarm 190
Tire Pressure Monitoring (TPMS) 199, 389
Traction Control 255
Turn Signal 101, 211, 316
Vanity Mirror 106
Warning (Instrument Cluster Description) . . .194, 211
Loading Vehicle 409
Tires 573
Locks 54
Child Protection 65
Door 54
Low Tire Pressure System 389
Lubrication, Body 542
Luggage Carrier 174
Lug Nuts 597

Maintenance Free Battery. 539
Maintenance, General 535
Maintenance Procedures 535
Maintenance Schedule 524
Malfunction Indicator Light (Check Engine) . . .204, 522
Manual, Service 16
Manual Transmission 334, 555
Fluid Level Check 556
Frequency Of Fluid Change 556
Lubricant Selection 555
Shift Speeds 336

Master Cylinder (Brakes) 553
Methanol 402
Mirrors
  Heated 87
  Outside 85
  Rearview 83, 435
  Vanity 106
Modifications/Alterations, Vehicle 7
Monitor, Tire Pressure System 389
MTBE/ETBE 402

New Vehicle Break-In Period 326

Occupant Restraints 258
Octane Rating, Gasoline (Fuel). 400, 601
Oil, Engine 535, 601
  Capacity 600
  Change Interval 536
  Checking 535
  Disposal 538
  Filter 538, 601
  Filter Disposal 538
  Materials Added To 538
  Pressure Warning Light 190
  Recommendation 537, 600
  Viscosity 537, 600
Oil Filter, Change 538
Oil Filter, Selection 538
Oil Pressure Light 190
Onboard Diagnostic System 215
Operating Precautions 215
Operator Manual (Owner's Manual) 5
Outside Rearview Mirrors 85
Overheating, Engine 506
Owner's Manual (Operator Manual) 5, 16

Paint Care 558
Parking Brake. 327

ParkSense System, Rear 381
Pets 312
Placard, Tire And Loading Information 574
Power
  Brakes 239
  Inverter 168
  Outlet (Auxiliary Electrical Outlet) 166
  Windows 114
Pregnant Women And Seat Belts. 270
Preparation For Jacking 486
Pretensioners
  Seat Belts 271

Radial Ply Tires 582
Radio Frequency
  General Information 33, 45, 49, 51, 64
Radio Operation 644
Rain Sensitive Wiper System 109
Rear Camera 386
Rear Cross Path 93
Rear ParkSense System 381
Rearview Mirrors 83
Rear Window Defroster 111
Rear Wiper/Washer. 111
Recorder, Event Data. 290
Recreational Towing 430
Reformulated Gasoline 401
Refrigerant 541
Reminder, Lights On. 99
Reminder, Seat Belt 260
Remote Control
  Starting System 45
Remote Keyless Entry (RKE) 31
  Arm The Alarm 52
  Keyless Enter-N-Go 58
  Programming Additional Key Fobs 40
  Programming Additional Transmitters 40
Remote Sound System (Radio) Controls 642

Remote Starting
Exit Remote Start Mode 48
Uconnect Customer Programmable Features 48
Uconnect Settings 48
Remote Starting System. 45
Replacement Keys 40
Replacement Parts. 523
Replacement Tires. 587
Reporting Safety Defects 15
Restraint, Head 78
Restraints, Child 291
Restraints, Occupant 258
Roll Over Warning 7
Roof Type Carrier 174
Rotation, Tires 590

Safety Checks Inside Vehicle 314
Safety Checks Outside Vehicle 316
Safety Defects, Reporting. 15
Safety, Exhaust Gas 313
Safety Information, Tire 567
Safety Tips 312
Schedule, Maintenance 524
Seat Belt
Adjustable Upper Shoulder Belt Anchorage 267
Automatic Locking Retractor (ALR) 271
Energy Management Feature 271
Lap/Shoulder Belt Operation 264
Lap/Shoulder Belts 261
Lap/Shoulder Belt Untwisting 266
Pregnant Women 270
Seat Belt Pretensioner 271
Seat Belt Reminder 260
Seat Belt System 258
Seat Belt Maintenance 564
Seat Belt Reminder 260
Seat Belts. 259, 314
Adjustable Shoulder Belt 267

Adjustable Upper Shoulder Anchorage 267
Child Restraint 291
Front Seat 259, 261, 264
Inspection 314
Operating Instructions 264
Pregnant Women 270
Pretensioners 271
Rear Seat 261
Reminder 186
Untwisting Procedure 266
Seats 66
Adjustment 66, 67
Head Restraints 78
Seatback Release 67
Tilting 67
Security Alarm. 51, 190
Arm The System 52
Selection Of Coolant (Antifreeze) 601
Sentry Key (Immobilizer) 50
Sentry Key Replacement 40
Service Assistance. 11
Service Contract 13
Service Manuals 16
Shifting
Manual Transmission 334
Shift Lever Override 507
Shoulder Belts 261
Side View Mirror Adjustment 85
Signals, Turn 101, 211, 316
Snow Chains (Tire Chains). 589
Snow Tires 583
Spark Plugs 601
Specifications
Fuel (Gasoline) 601
Oil 601
Speed Control (Cruise Control). 351
Starting. 45, 321
Cold Weather 323

Engine Fails To Start 322
Remote 45
Starting And Operating 321
Starting Procedures 321
Steering
Tilt Column 81
Wheel, Heated 82
Wheel, Tilt 81
Steering Wheel Audio Controls 642
Steering Wheel Mounted Sound System Controls . . .642
Stuck, Freeing 512
Sun Visor Extension 164
Supplemental Restraint System - Air Bag 274
Sway Control, Trailer 256, 419
System, Remote Starting 45

Telescoping Steering Column 81
Temperature Control, Automatic (ATC) 129
Tilt Steering Column 81
Time Delay, Headlight 99
Tip Start 322
Tire And Loading Information Placard 573, 574
Tire Markings 567
Tires 17, 316, 578
Aging (Life Of Tires) 586
Air Pressure 578
Chains 589
Changing 483, 565
General Information 578
High Speed 581
Inflation Pressures 580
Jacking 483, 565
Life Of Tires 586
Load Capacity 573, 574
Pressure Monitor System (TPMS) 389
Pressure Warning Light 199
Quality Grading 17
Radial 582

Replacement 587
Rotation 590
Safety 567, 578
Sizes 568
Snow Tires 583
Spinning 585
Trailer Towing 424
Tread Wear Indicators 586
Tire Safety Information 567
Tire Service Kit 495
Tongue Weight/Trailer Weight 422
Tow Hooks, Emergency 516
Towing 417
Disabled Vehicle 514
Guide 421
Recreational 430
Weight 421
Trailer Sway Control (TSC) 256
Trailer Towing 417
Cooling System Tips 429
Hitches 420
Minimum Requirements 423
Trailer And Tongue Weight 422
Wiring 426
Trailer Towing Guide. 421
Trailer Weight. 421
Transfer Case
Fluid 602
Transmission
Automatic 339, 556
Fluid 602
Manual 334
Transmitter Programming (Remote Keyless Entry) . . .40
Transmitter, Remote Keyless Entry (RKE) 31
Transporting Pets 312
Tread Wear Indicators 586
Turn Signals. 101, 211

UCI Connector 641
Uconnect
Customer Programmable Features 48
Uconnect Settings 48
Uconnect 8.4A/8.4AN Voice Recognition
General Information 662
Uconnect Settings 33
Customer Programmable Features 635
Passive Entry Programming 635
Uconnect Settings 635
Uconnect Voice Command 646
Uniform Tire Quality Grades 17
Universal Consumer Interface (UCI) Connector 641
Unleaded Gasoline 400
Untwisting Procedure, Seat Belt 266

Vanity Mirrors 106
Vehicle Loading 409, 574
Vehicle Modifications/Alterations 7
Vehicle Security Alarm (Security Alarm) 51
Viscosity, Engine Oil 537

Warning Flasher, Hazard 435
Warning, Roll Over 7
Warnings And Cautions 7
Warranty Information 15
Washer
Adding Fluid 545
Washing Vehicle 559
Wheel And Wheel Trim 560
Wheel And Wheel Trim Care 560
Wind Buffeting 117
Windows 114
Power 114
Windshield Defroster 120, 314
Windshield Wiper Blades 542
Wiper Blade Replacement 542
Wipers, Intermittent 108

Wipers, Rain Sensitive 109
Wrecker Towing 514

INSTALLATION OF RADIO TRANSMITTING EQUIPMENT

Special design considerations are incorporated into this vehicle's electronic system to provide immunity to radio frequency signals. Mobile two-way radios and telephone equipment must be installed properly by trained personnel. The following must be observed during installation.

The positive power connection should be made directly to the battery and fused as close to the battery as possible. The negative power connection should be made to body sheet metal adjacent to the negative battery connection. This connection should not be fused.

Antennas for two-way radios should be mounted on the roof or the rear area of the vehicle. Care should be used in mounting antennas with magnet bases. Magnets may affect the accuracy or operation of the compass on vehicles so equipped.

The antenna cable should be as short as practical and routed away from the vehicle wiring when possible. Use only fully shielded coaxial cable.

Carefully match the antenna and cable to the radio to ensure a low Standing Wave Ratio (SWR).

Mobile radio equipment with output power greater than normal may require special precautions.

All installations should be checked for possible interference between the communications equipment and the vehicle's electronic systems.

STICK WITH THE SPECIALISTS®

16BU-126-AA
©2015 FCA US LLC. All Rights Reserved.
Jeep is a registered trademark of FCA US LLC.

First Edition Rev 1
Printed in U.S.A.