CHRYSLER

2013 200 Convertible

OWNER'S MANUAL

VEHICLES SOLD IN CANADA

With respect to any Vehicles Sold in Canada, the name Chrysler Group LLC shall be deemed to be deleted and the name Chrysler Canada Inc. used in substitution therefore.

DRIVING AND ALCOHOL

Drunken driving is one of the most frequent causes of accidents.

Your driving ability can be seriously impaired with blood alcohol levels far below the legal minimum. If you are drinking, don't drive. Ride with a designated non-drinking driver, call a cab, a friend, or use public transportation.

WARNING!
Driving after drinking can lead to an accident. Your perceptions are less sharp, your reflexes are slower, and your judgment is impaired when you have been drinking. Never drink and then drive.

This manual illustrates and describes the operation of features and equipment that are either standard or optional on this vehicle. This manual may also include a description of features and equipment that are no longer available or were not ordered on this vehicle. Please disregard any features and equipment described in this manual that are not on this vehicle.

Chrysler Group LLC reserves the right to make changes in design and specifications, and/or make additions to or improvements to its products without imposing any obligation upon itself to install them on products previously manufactured.

Copyright © 2012 Chrysler Group LLC

TABLE OF CONTENTS

SECTION		PAGE
1	INTRODUCTION	3
2	THINGS TO KNOW BEFORE STARTING YOUR VEHICLE	9
3	UNDERSTANDING THE FEATURES OF YOUR VEHICLE	97
4	UNDERSTANDING YOUR INSTRUMENT PANEL	215
5	STARTING AND OPERATING	299
6	WHAT TO DO IN EMERGENCIES	397
7	MAINTAINING YOUR VEHICLE	421
8	MAINTENANCE SCHEDULES	479
9	IF YOU NEED CONSUMER ASSISTANCE	487
10	INDEX	497

INTRODUCTION

CONTENTS

- INTRODUCTION 4
- HOW TO USE THIS MANUAL 4
- WARNINGS AND CAUTIONS 6
- VEHICLE IDENTIFICATION NUMBER 6
- VEHICLE MODIFICATIONS/ALTERATIONS 7

INTRODUCTION

Congratulations on selecting your new Chrysler Group LLC vehicle. Be assured that it represents precision workmanship, distinctive styling, and high quality - all essentials that are traditional to our vehicles.

This Owner's Manual has been prepared with the assistance of service and engineering specialists to acquaint you with the operation and maintenance of your vehicle. It is supplemented by Warranty Information, and various customer-oriented documents. Please take the time to read these publications carefully. Following the instructions and recommendations in this manual will help assure safe and enjoyable operation of your vehicle.

NOTE: After reviewing the owner information, it should be stored in the vehicle for convenient referencing and remain with the vehicle when sold.

When it comes to service, remember that your authorized dealer knows your vehicle best, has factory-trained technicians and genuine MOPAR® parts, and cares about your satisfaction.

HOW TO USE THIS MANUAL

Consult the Table of Contents to determine which section contains the information you desire.

Since the specification of your vehicle depends on the items of equipment ordered, certain descriptions and illustrations may differ from your vehicle's equipment.

The detailed index at the back of this Owner's Manual contains a complete listing of all subjects.

Consult the following table for a description of the symbols that may be used on your vehicle or throughout this Owner's Manual:

WATER IN FUEL
REAR WINDOW WIPER
WINDSHIELD WIPER INTERMITTENT
EXTERIOR BULB FAILURE
HIGH BEAM
TURN SIGNALS
UPPER AIR OUTLET
HEATED SEAT LOW
DOOR LOCK
ADJUSTABLE PEDALS
ELECTRONIC SPEED CONTROL
ESP BAS
ELECTRONIC STABILITY PROGRAM / BRAKE ASSIST SYSTEM
FUEL
REAR WINDOW INTERMITTENT WIPER
WINDSHIELD WASHER
MASTER LIGHTING SWITCH
LOW BEAM
KEY ACTIVATE (POWER OUTLET)
UPPER AND LOWER AIR OUTLET
HEATED SEAT HIGH
WINDOW LIFT
TIRE PRESSURE MONITOR
HILL DESCENT CONTROL
BRAKE
BRAKE SYSTEM WARNING PARKING BRAKE
FUEL FILL SIDE
REAR WINDOW WASHER
WINDSHIELD WASHER FLUID LEVEL
DOME LIGHT
FRONT FOG LIGHT
HOOD RELEASE
LOWER AIR OUTLET
RECIRCULATION
CONVERTIBLE 4 WINDOW DOWN
ELECTRONIC STABILITY CONTROL
AWD!
ALL WHEEL DRIVE
ABS
FAILURE OF ANTI-LOCK BRAKING SYSTEM
ENGINE OIL
REAR WINDOW DEFROST
WINDSHIELD, ELECTRICALLY HEATED
PARK LIGHTS
REAR FOG LAMP
LIFTGATE RELEASE AND LIFTGATE OPEN
DEFROST AND LOWER AIR OUTLET
VENTILATING FAN
WINDOW LOCK
ELECTRONIC THROTTLE CONTROL
4WD!
FOUR WHEEL DRIVE
BRAKE
BRAKE SYSTEM WARNING PARKING BRAKE
BATTERY CHARGING
HEATED MIRROR
WINDSHIELD DEFROST
INSTRUMENT PANEL ILLUMINATION
SEAT BELT
SLIDING DOOR
TRUNK / DECK RELEASE
AIR CONDITIONING
CHILD SEAT TETHER ANCHOR
VOICE RECOGNITION BUTTON
WARNING
TOW/ HAUL
TOW / HAUL
GLOW PLUG
POWER STEERING FLUID
WINDSHIELD WIPER AND WASHER
SIDE AIRBAG
AIRBAG
SLIDING DOOR
EMERGENCY RELEASE HANDLE
LIGHTER
LOWER ANCHORS AND TETHER FOR CHILDREN (LATCH)
UCONNECT™ BUTTON
HAZARD
4 LOW
FOUR WHEEL DRIVE LOW
MALFUNCTION INDICATOR LIGHT
TRANS OIL TEMP
ENGINE COOLANT TEMPERATURE
SRS AIRBAG
SUPPLEMENTAL RESTRAINT SYSTEM
PASSENGER AIRBAG OFF
DOOR AJAR
CONVERTIBLE TOP DOWN
CONVERTIBLE TOP UP
HORN
SEE OWNER'S MANUAL ISO
A/C PUSH
AIR CONDITIONER
OFF
ELECTRONIC STABILITY CONTROL OFF
010533317

WARNINGS AND CAUTIONS

This Owners Manual contains **WARNINGS** against operating procedures that could result in a collision or bodily injury. It also contains **CAUTIONS** against procedures that could result in damage to your vehicle. If you do not read this entire Owners Manual, you may miss important information. Observe all Warnings and Cautions.

VEHICLE IDENTIFICATION NUMBER

The Vehicle Identification Number (VIN) is on the left front corner of the instrument panel and is visible from outside of the vehicle through the windshield. This number also appears stamped on the right front door sill under the sill moulding and printed on the Automobile Information Disclosure Label affixed to a window on your vehicle, the vehicle registration and title.

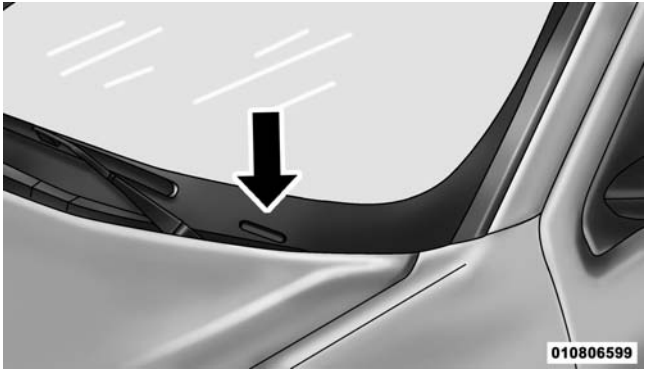

Vehicle Identification Number

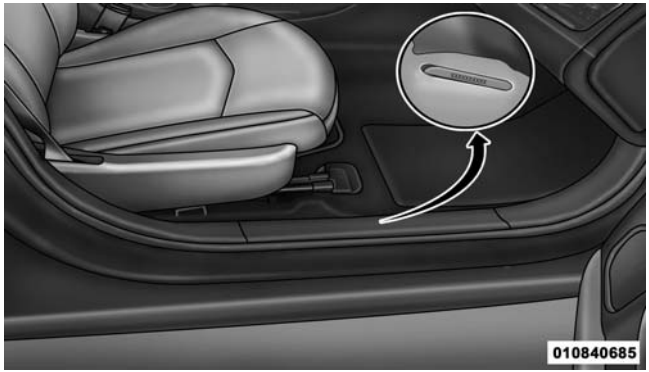

Stamped VIN Location

NOTE: It is illegal to remove or alter the VIN.

VEHICLE MODIFICATIONS/ALTERATIONS

WARNING!

Any modifications or alterations to this vehicle could seriously affect its roadworthiness and safety and may lead to a collision resulting in serious injury or death.

THINGS TO KNOW BEFORE STARTING YOUR VEHICLE

CONTENTS

- A WORD ABOUT YOUR KEYS 12
  - Ignition Key Removal 12
  - Key-In-Ignition Reminder 15
- SENTRY KEY® 15
  - Replacement Keys 16
  - Customer Key Programming 17
  - General Information 18
- VEHICLE SECURITY ALARM — IF EQUIPPED 18
  - Rearming The System 19
  - To Arm The System. 19
  - To Disarm The System. 20
- ILLUMINATED ENTRY — IF EQUIPPED 21
- REMOTE KEYLESS ENTRY (RKE) 21
  - To Unlock The Doors. 22
  - To Lock The Doors 25
  - Convertible Top Operation Button — If Equipped 26
  - To Unlatch The Trunk 26
  - Using The Panic Alarm 26

- Programming Additional Transmitters 26
- Battery Replacement 26
- General Information 27

■ REMOTE STARTING SYSTEM — IF EQUIPPED 28
- How To Use Remote Start 28

■ DOOR LOCKS 31
- Manual Door Locks 31
- Power Door Locks 32

■ WINDOWS 34
- Power Windows 34
- Wind Buffeting 38

■ TRUNK LOCK AND RELEASE 38

■ TRUNK SAFETY WARNING. 39
- Trunk Internal Emergency Release 39

■ OCCUPANT RESTRAINTS 40
- Lap/Shoulder Belts 43
- Lap/Shoulder Belt Untwisting Procedure 48
- Seat Belts In Passenger Seating Positions 48
- Automatic Locking Retractor Mode (ALR) — If Equipped 49
- Energy Management Feature 50
- Seat Belt Pretensioners 51
- Supplemental Active Head Restraints (AHR) — If Equipped 51
- Enhanced Seat Belt Use Reminder System (BeltAlert®) 55

- Seat Belts And Pregnant Women 56
- Seat Belt Extender 56
- Supplemental Restraint System (SRS) — Air Bags 57
- Air Bag Deployment Sensors And Controls 61
- Event Data Recorder (EDR) 68
- Child Restraints 69
- Transporting Pets 90

■ ENGINE BREAK-IN RECOMMENDATIONS 90

■ SAFETY TIPS 91
- Transporting Passengers. 91
- Exhaust Gas 91
- Safety Checks You Should Make Inside The Vehicle 92
- Periodic Safety Checks You Should Make Outside The Vehicle 95

A WORD ABOUT YOUR KEYS

The authorized dealer that sold you your new vehicle has the key code numbers for your vehicle locks. These numbers can be used to order duplicate keys from your authorized dealer. Ask your authorized dealer for these numbers and keep them in a safe place.

You can insert the double-sided keys into the locks with either side up.

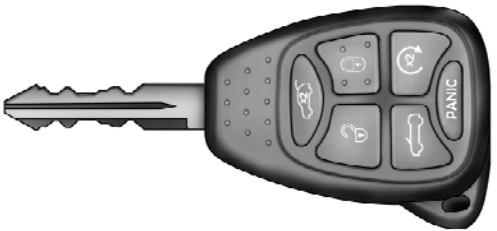

020210512

Vehicle Key

Ignition Key Removal

Place the shift lever in PARK. Turn the ignition switch to the ACC position, push the key slightly inward, rotate the key to the LOCK position, and remove the key.

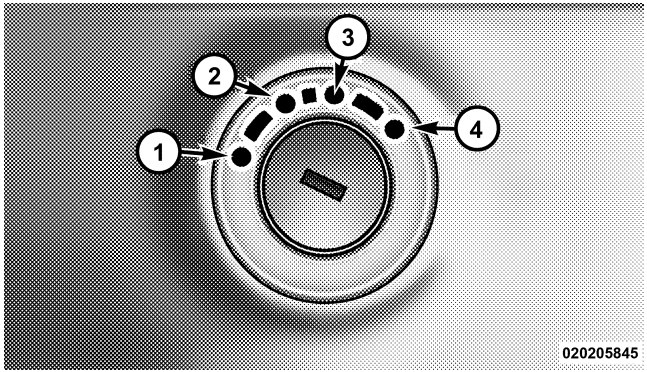

Ignition Switch Positions

1 — LOCK	3 — ON/RUN
2 — ACC (ACCESSORY)	4 — START

NOTE:

- If you try to remove the key before you place the shift lever into PARK, the key may become trapped temporarily in the ignition switch lock cylinder. If this occurs, place the shift lever in PARK, rotate the key to the right slightly, then remove the key as described. If a malfunction occurs, the system will trap the key in the ignition switch lock cylinder to warn you that this safety feature is inoperable. The engine can be started and stopped, but the key cannot be removed until you obtain service.
- For vehicles not equipped with the Electronic Vehicle Information Center (EVIC), the power window switches, radio, hands–free system (if equipped), and power outlets will remain active for 45 seconds after the ignition switch is turned to the LOCK position. Opening either door will cancel this feature.

- For vehicles equipped with the Electronic Vehicle Information Center (EVIC), the power window switches, radio, hands–free system (if equipped), and power outlets will remain active for up to 10 minutes after the ignition switch is turned to the LOCK position. Opening either front door will cancel this feature. The time for this feature is programmable. Refer to "Electronic Vehicle Information Center (EVIC)/ Personal Settings (Customer-Programmable Features)" in "Understanding Your Instrument Panel" for further information.

WARNING!

- **Before exiting a vehicle, always apply the parking brake, shift the transmission into PARK, and remove the Key Fob from the ignition. When leaving the vehicle, always lock your vehicle.**

(Continued)

WARNING! (Continued)

- **Never leave children alone in a vehicle, or with access to an unlocked vehicle.**
- **Allowing children to be in a vehicle unattended is dangerous for a number of reasons. A child or others could be seriously or fatally injured. Children should be warned not to touch the parking brake, brake pedal or the shift lever.**
- **Do not leave the Key Fob in or near the vehicle, and do not leave the ignition in the ACC or ON/RUN position. A child could operate power windows, other controls, or move the vehicle.**

CAUTION!

An unlocked car is an invitation to thieves. Always remove key from the ignition and lock all doors when leaving the vehicle unattended.

Key-In-Ignition Reminder

Opening the driver's door when the key is in the ignition sounds a chime signal to remind you to remove the key.

NOTE:

- The Key-In-Ignition reminder only sounds when the ignition key is placed in the LOCK or ACC position.
- With either front door open, and the key in the ignition, both the power door locks and Remote Keyless Entry (RKE) transmitter will not function.

SENTRY KEY®

The Sentry Key® Immobilizer System prevents unauthorized vehicle operation by disabling the engine. The system does not need to be armed or activated. Operation is automatic, regardless of whether the vehicle is locked or unlocked.

The system uses ignition keys which have an embedded electronic chip (transponder) to prevent unauthorized vehicle operation. Therefore, only keys that are programmed to the vehicle can be used to start and operate the vehicle. The system will shut the engine off in two seconds if someone uses an invalid key to start the engine.

NOTE: A key which has not been programmed is also considered an invalid key, even if it is cut to fit the ignition switch lock cylinder for that vehicle.

During normal operation, after turning the ignition switch to ON/RUN, the Vehicle Security Light will turn on for three seconds for a bulb check. If the light remains after the bulb check, it indicates that there is a problem with the electronics. In addition, if the light begins to flash after the bulb check, it indicates that someone used

an invalid key to start the engine. Either of these conditions will result in the engine being shut off after two seconds.

If the Vehicle Security Light turns on during normal vehicle operation (vehicle running for longer than 10 seconds), it indicates that there is a fault in the electronics. Should this occur, have the vehicle serviced as soon as possible by an authorized dealer.

CAUTION!

Always remove the Sentry Key® from the vehicle and lock all doors when leaving the vehicle unattended.

CAUTION!

The Sentry Key® Immobilizer system is not compatible with some after-market remote starting systems.

(Continued)

CAUTION! (Continued)

Use of these systems may result in vehicle starting problems and loss of security protection.

All of the keys provided with your new vehicle have been programmed to the vehicle electronics.

Replacement Keys

NOTE: Only keys that have been programmed to the vehicle electronics can be used to start the vehicle. Once a Sentry Key® has been programmed to a vehicle, it cannot be programmed to any other vehicle.

At the time of purchase, the original owner is provided with a four-digit Personal Identification Number (PIN). This PIN is required for authorized dealer replacement of keys. Duplication of keys may be performed at an

authorized dealer or by using the Customer Key Programming procedure. This procedure consists of programming a blank key to the vehicle electronics. A blank key is one which has never been programmed.

NOTE: When having the Sentry Key® Immobilizer System serviced, bring all vehicle keys with you to an authorized dealer.

Customer Key Programming

You can program new keys to the system if you have two valid Sentry Keys® by performing the following procedure:

1. Cut the additional Sentry Key® Transponder blank(s) to match the ignition switch lock cylinder key code.
2. Insert the first valid key into the ignition switch. Turn the ignition switch to the ON/RUN position for at least three seconds, but no longer than 15 seconds. Then, turn the ignition switch to the LOCK position and remove the first key.
3. Insert the second valid key into the ignition switch. Turn the ignition switch to the ON/RUN position within 15 seconds. After ten seconds, a chime will sound. In addition, the Vehicle Security Light will begin to flash. Turn the ignition switch to the LOCK position and remove the second key.
4. Insert a blank Sentry Key® into the ignition switch. Turn the ignition switch to the ON/RUN position within 60 seconds. After 10 seconds, a single chime will sound. In addition, the Vehicle Security Light will stop flashing. To indicate that programming is complete, the indicator light will turn on again for three seconds and then turn off.

The new Sentry Key® is programmed. **The Remote Keyless Entry (RKE) transmitter will also be programmed during this procedure.**

Repeat this procedure to program up to eight keys. If you do not have a programmed Sentry Key® contact your authorized dealer for details.

NOTE: If a programmed key is lost, see your authorized dealer to have all remaining keys erased from the systems memory. This will prevent the lost key from starting your vehicle. The remaining keys must then be reprogrammed. All vehicle keys must be taken to your authorized dealer at the time of service to be reprogrammed.

General Information

The Sentry Key® system complies with FCC rules part 15 and with RSS-210 of Industry Canada. Operation is subject to the following conditions:

- This device may not cause harmful interference.
- This device must accept any interference that may be received, including interference that may cause undesired operation.

VEHICLE SECURITY ALARM — IF EQUIPPED

The Vehicle Security Alarm monitors the doors and trunk for unauthorized entry and ignition switch for unauthorized operation. While the Vehicle Security Alarm is armed, interior switches for door locks and decklid release are disabled.

If something triggers the alarm, the Vehicle Security Alarm will signal for about 18 minutes. For the first 3 minutes, the horn will sound intermittently, the headlights will turn on, the park lamps and/or turn signals will flash and the Vehicle Security Light in the cluster will flash. Then the exterior lights will flash for another 15 minutes.

Rearming The System

If something triggers the alarm, and no action is taken to disarm it, the Vehicle Security Alarm will turn off the horn after three minutes, turn off all of the visual signals after 15 minutes, and then the Vehicle Security Alarm will rearm itself.

To Arm The System

1. Remove the keys from the ignition switch and get out of the vehicle.
2. Lock the door using either the power door lock switch (one door must be open) or the LOCK button on the Remote Keyless Entry (RKE) transmitter (doors can be open or closed), and close all doors.

NOTE: The Vehicle Security Alarm will not arm if you lock the doors with the manual door lock plungers.

3. The Vehicle Security Light in the instrument cluster will flash for 16 seconds. This shows that the Vehicle Security Alarm is arming. During this period, if a door is opened, the ignition switch is turned to ON/RUN, or the power door locks are unlocked in any manner, the Vehicle Security Alarm will automatically disarm.

NOTE:

- During the 16-second arming period, if a door is opened or the ignition switch is turned to ON/RUN, the Vehicle Security Alarm will automatically disarm.
- Once armed, the Vehicle Security Alarm disables the unlock switch on the driver door trim panel and passenger door trim panel, the trunk release button on the instrument panel, and the HomeLink®/Garage Door Opener (if equipped).

To Disarm The System

Either press the UNLOCK button on the RKE transmitter or insert a valid Sentry Key® into the ignition lock cylinder and turn the key to the ON/START position.

NOTE:

- The driver's door key cylinder and the trunk button on the RKE transmitter cannot arm or disarm the Vehicle Security Alarm.
- The Vehicle Security Alarm remains armed during trunk entry. Pressing the trunk button will not disarm the Vehicle Security Alarm. If someone enters the vehicle through the trunk and opens any door, the alarm will sound.

The Vehicle Security Alarm is designed to protect your vehicle; however, you can create conditions where the Vehicle Security Alarm will give you a false alarm. If one of the previously described arming sequences has occurred, the Vehicle Security Alarm will arm regardless of whether you are in the vehicle or not. If you remain in the vehicle and open a door, the alarm will sound. If this occurs, disarm the Vehicle Security Alarm.

If the Vehicle Security Alarm is armed and the battery becomes disconnected the Vehicle Security Alarm will remain armed when the battery is reconnected. The exterior lights will flash, and the horn will sound. If this occurs, disarm the Vehicle Security Alarm.

Tamper Alert

If the alarm was triggered, but the warning signals have timed out, the park and taillights flash three times, and the horn will chirp three times, when unlocking the vehicle with a valid RKE transmitter to alert the driver.

ILLUMINATED ENTRY — IF EQUIPPED

The courtesy lights will turn on when you press the unlock button on the Remote Keyless Entry (RKE) transmitter or open any door.

This feature also turns on the approach lighting in the outside mirrors (if equipped). Refer to "Mirrors" in "Understanding The Features Of Your Vehicle" for further information.

The interior lights will fade to off after approximately 30 seconds or they will immediately fade to off once the ignition switch is turned to ON/RUN from the OFF position..

NOTE:

- The front courtesy overhead console and door courtesy lights will turn on if the dimmer control is in the "Dome ON" position (extreme top position).
- The Illuminated Entry system will not operate if the dimmer control is in the "Dome defeat" position (extreme bottom position).

REMOTE KEYLESS ENTRY (RKE)

This system allows you to lock or unlock the doors, open the trunk, open the convertible top (if equipped), or activate the Panic Alarm from distances up to 66 ft (20 m) using a hand-held Remote Keyless Entry (RKE) transmitter. The RKE transmitter does not need to be pointed at the vehicle to activate the system.

NOTE:

- The line of transmission must not be blocked with metal objects when using the RKE transmitter.
- Inserting the key into the ignition switch disables all buttons on the RKE transmitter.

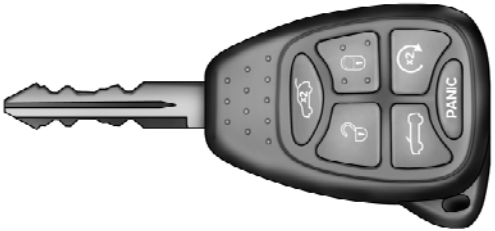

020210512

RKE Transmitter With Integrated Key

To Unlock The Doors

Press and release the UNLOCK button on the RKE transmitter once to unlock the driver's door or twice to unlock both doors. The turn signal lights will flash to acknowledge the unlock signal. The Illuminated Entry system (if equipped) will also turn on.

Remote Key Unlock, Driver Door/All Doors First Press

This feature lets you program the system to unlock either the driver's door or both doors on the first press of the UNLOCK button on the RKE transmitter. To change the current setting, proceed as follows:

- For vehicles equipped with the Electronic Vehicle Information Center (EVIC), refer to "Electronic Vehicle Information Center (EVIC)/Personal Settings (Customer-Programmable Features)" in "Understanding Your Instrument Panel" for further information.

- For vehicles not equipped with the EVIC, perform the following procedure:

1. Press and hold the LOCK button on a programmed RKE transmitter for at least four seconds, but not longer than 10 seconds. Then, press and hold the UNLOCK button while still holding the LOCK button.
2. Release both buttons at the same time.
3. Test the feature while outside of the vehicle by pressing the LOCK/UNLOCK buttons on the RKE transmitter with the ignition in the LOCK position and the key removed.
4. Repeat these steps if you want to return this feature to its previous setting.

NOTE: If there is no key in the ignition switch, pressing the LOCK button on the RKE transmitter while you are inside the vehicle will activate the Vehicle Security Alarm System. Opening a door with the Vehicle Security Alarm activated will cause the alarm to sound. Press the UNLOCK button to deactivate the Vehicle Security Alarm System.

Flash Lights With Lock

The feature will cause the turn signal lights to flash when the doors are locked or unlocked with the RKE transmitter. This feature can be turned on or turned off. To change the current setting, proceed as follows:

- For vehicles equipped with the Electronic Vehicle Information Center (EVIC), refer to “Electronic Vehicle Information Center (EVIC)/Personal Settings (Customer-Programmable Features)” in “Understanding Your Instrument Panel” for further information.

- For vehicles not equipped with the EVIC, perform the following procedure:

1. Press and hold the UNLOCK button on a programmed RKE transmitter for at least four seconds, but not longer than 10 seconds. Then, press and hold the LOCK button while still holding the UNLOCK button.
2. Release both buttons at the same time.
3. Test the feature while outside of the vehicle by pressing the LOCK/UNLOCK buttons on the RKE transmitter with the ignition in the LOCK position and the key removed.
4. Repeat these steps if you want to return this feature to its previous setting.

NOTE: If there is no key in the ignition switch, pressing the LOCK button on the RKE transmitter while you are in the vehicle will activate the Vehicle Security Alarm. Opening a door with the Vehicle Security Alarm activated will cause the alarm to sound. Press the UNLOCK button to deactivate the Vehicle Security Alarm System.

Illuminated Approach — If Equipped

This feature activates the headlights for up to 90 seconds when the doors are unlocked with the RKE transmitter. The time for this feature is programmable on vehicles equipped with the Electronic Vehicle Information Center (EVIC). Refer to “Electronic Vehicle Information Center (EVIC)/Personal Settings (Customer-Programmable Features)” in “Understanding Your Instrument Panel” for further information.

To Lock The Doors

Press and release the LOCK button on the RKE transmitter to lock both doors. The turn signal lights will flash and the horn will chirp once to acknowledge the lock signal.

Sound Horn With Lock

This feature will cause the horn to chirp when the doors are locked with the RKE transmitter. This feature can be turned on or off. To change the current setting, proceed as follows:

- For vehicles equipped with the Electronic Vehicle Information Center (EVIC), refer to "Electronic Vehicle Information Center (EVIC)/Personal Settings (Customer-Programmable Features)" in "Understanding Your Instrument Panel" for further information.
- For vehicles not equipped with the EVIC, perform the following steps:

1. Press the LOCK button on a programmed RKE transmitter for at least four seconds, but not longer than 10 seconds. Then, press the PANIC button while still holding the LOCK button.
2. Release both buttons at the same time.
3. Test the feature while outside of the vehicle by pressing the LOCK button on the RKE transmitter with the ignition in the LOCK position and the key removed.
4. Repeat these steps if you want to return this feature to its previous setting.

NOTE: If there is no key in the ignition switch, pressing the LOCK button on the RKE transmitter while you are in the vehicle will activate the Vehicle Security Alarm. Opening a door with the Vehicle Security Alarm activated will cause the alarm to sound. Press the UNLOCK button to deactivate the Vehicle Security Alarm System.

Convertible Top Operation Button — If Equipped

Refer to "Convertible Top Operation" under "Understanding The Features Of Your Vehicle" for further information.

To Unlatch The Trunk

Press the TRUNK button on the RKE transmitter two times to unlatch the trunk.

Using The Panic Alarm

To turn the Panic Alarm feature on or off, press and hold the PANIC button on the RKE transmitter for at least one second and release. When the Panic Alarm is on, the headlights turn on, the park lights will flash, the horn will pulse on and off, and the Illuminated Entry system (if equipped) will turn on.

The Panic Alarm will stay on for three minutes unless you turn it off by pressing the PANIC button a second time or if the vehicle speed is 5 mph (8 km/h) or greater.

NOTE: You may need to be close to the vehicle when using the RKE transmitter to turn off the Panic Alarm due to the Radio Frequency (RF) noises emitted by the system.

Programming Additional Transmitters

Refer to Sentry Key® "Customer Key Programming."

If you do not have a programmed RKE transmitter, contact your authorized dealer for details.

Battery Replacement

The recommended replacement battery is CR2032.

NOTE:

- Perchlorate Material — special handling may apply. See www.dtsc.ca.gov/hazardouswaste/perchlorate
- Do not touch the battery terminals that are on the back housing or the printed circuit board.

1. With the RKE transmitter buttons facing down, use a flat blade tool to pry the two halves of the RKE transmitter apart. Make sure not to damage the seal during removal.

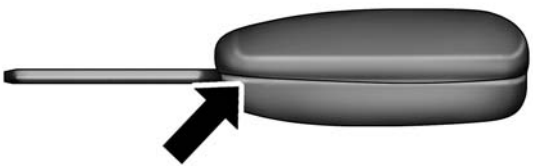

Battery Service

2. Remove and replace the battery. Avoid touching the new battery with your fingers. Skin oils may cause battery deterioration. If you touch a battery, clean it with rubbing alcohol.
3. To assemble the RKE transmitter case, snap the two halves together.

General Information

This device complies with part 15 of FCC rules and with RS-210 of Industry Canada. Operation is subject to the following conditions:

1. This device may not cause harmful interference.
2. This device must accept any interference that may be received including interference that may cause undesired operation.

NOTE: Changes or modifications not expressly approved by the party responsible for compliance could void the user's authority to operate the equipment.

If your RKE transmitter fails to operate from a normal distance, check for these two conditions:

1. Weak battery in the RKE transmitter. The expected life of a battery is five years.
2. Closeness to a radio transmitter such as a radio station tower, airport transmitter, military base, and some mobile or CB radios.

REMOTE STARTING SYSTEM — IF EQUIPPED

This system uses the Remote Keyless Entry (RKE) transmitter to start the engine conveniently from outside the vehicle while still maintaining security. The system has a range of approximately 66 ft (20 m).

NOTE:

- The vehicle must be equipped with an automatic transmission to be equipped with Remote Start.
- Obstructions between the vehicle and the Key Fob may reduce this range.

How To Use Remote Start

All of the following conditions must be met before the engine will remote start:

- Shift lever in PARK
- Doors closed
- Hood closed
- Trunk closed
- Hazard switch off
- Brake switch inactive (brake pedal not pressed)

- Ignition key removed from ignition switch
- Battery at an acceptable charge level
- RKE PANIC button not pressed
- System not disabled from previous remote start event
- Vehicle theft alarm not active

WARNING!

- **Do not start or run an engine in a closed garage or confined area. Exhaust gas contains Carbon Monoxide (CO) which is odorless and colorless. Carbon Monoxide is poisonous and can cause serious injury or death when inhaled.**
- **Keep Remote Keyless Entry (RKE) transmitters away from children. Operation of the Remote Start System, windows, door locks or other controls could cause serious injury or death.**

Remote Start Abort Message On Electronic Vehicle Information Center (EVIC) — If Equipped

The following messages will display in the EVIC if the vehicle fails to remote start or exits remote start prematurely:

- Remote Start Aborted — Door Ajar
- Remote Start Aborted — Hood Ajar
- Remote Start Aborted — Trunk Ajar
- Remote Start Aborted — Fuel Low
- Remote Start Aborted — System Fault

The EVIC message stays active until the ignition is turned to the RUN position.

To Enter Remote Start Mode

Press and release the REMOTE START button on the RKE transmitter twice within five seconds. The vehicle doors will lock, the parking lights will flash and the horn will chirp twice (if programmed). Then, the engine will start and the vehicle will remain in the Remote Start mode for a 15-minute cycle.

NOTE:

- For security, power window operation is disabled when the vehicle is in the Remote Start mode.
- The engine can be started two consecutive times (two 15 minute cycles) with the RKE transmitter. However, the ignition switch must be cycled to the ON/RUN position before you can repeat the start sequence for a third cycle.
- If an engine fault is present the vehicle will start and then shut down 10 seconds later.

Remote start will also cancel if any of the following occur:

- The engine stalls or RPM exceeds 2500
- Any engine warning lamps come on
- Low Fuel Light turns on
- The hood is opened
- The hazard switch is pressed
- The transmission is moved out of PARK
- The brake pedal is pressed

To Exit Remote Start Mode Without Driving The Vehicle

Press and release the REMOTE START button one time or allow the engine to run for the entire 15 minute cycle.

NOTE: To avoid unintentional shut downs, the system will disable the one-time press of the remote start button for two seconds after receiving a valid remote start request.

To Exit Remote Start Mode And Drive The Vehicle

Before the end of the 15 minute cycle, press and release the UNLOCK button on the RKE transmitter to unlock the doors and disarm the Vehicle Security Alarm (if equipped). Then insert the key into the ignition switch and turn the switch to the ON/RUN position.

NOTE: The ignition switch must be in the ON/RUN position in order to drive the vehicle.

DOOR LOCKS

Manual Door Locks

To lock each door, push the door lock knob on each door trim panel downward. To unlock each door, pull the inside door handle.

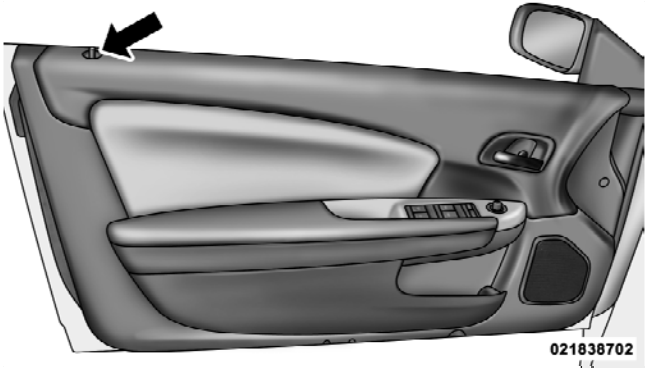

Manual Lock Knob

If the door lock knob is down when you shut the door, the door will lock. Make sure the keys are not inside the vehicle before closing the door.

WARNING!

- **For personal security and safety in the event of an collision, lock the vehicle doors as you drive as well as when you park and leave the vehicle.**
- **When leaving the vehicle, always remove the key fob from the ignition and lock your vehicle.**
- **Never leave children alone in a vehicle, or with access to an unlocked vehicle.**
- **Allowing children to be in a vehicle unattended is dangerous for a number of reasons. A child or others could be seriously or fatally injured. Children should be warned not to touch the parking brake, brake pedal or the shift lever.**

(Continued)

WARNING! (Continued)

- **Do not leave the key fob in or near the vehicle, and do not leave the ignition in the ACC or ON/RUN position. A child could operate power windows, other controls, or move the vehicle.**

Power Door Locks

A door lock switch is located on the driver and passenger door trim panel. Press this switch to lock or unlock the doors.

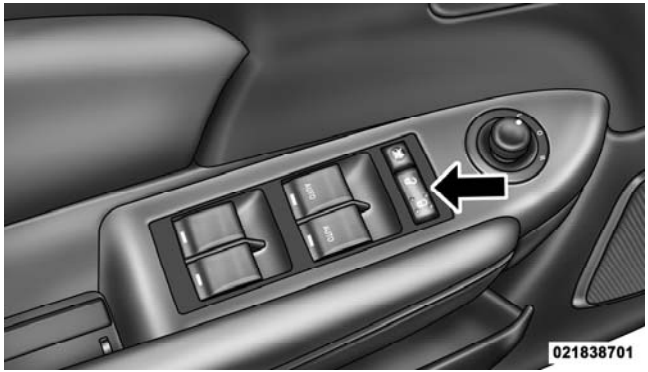

Power Door Lock Switch

Automatic Door Locks — If Equipped

The auto door lock feature default condition is enabled. When enabled, the door locks will lock automatically when the vehicle's speed exceeds 15 mph (24 km/h). The auto door lock feature can be enabled or disabled by your authorized dealer. Please see your authorized dealer for service.

Auto Unlock On Exit

The doors will unlock automatically on vehicles with power door locks if:

1. The Automatic Unlock Doors On Exit feature is enabled.
2. The transaxle was in gear and the vehicle speed returned to 0 mph (0 km/h).
3. The transaxle is in NEUTRAL or PARK.
4. The driver door is opened.
5. The doors were not previously unlocked.
6. The vehicle speed is 0 mph (0 km/h).

Auto Unlock Door On Exit Programming

The Automatic Unlock Doors On Exit feature can be enabled or disabled as follows:

- For vehicles equipped with the Electronic Vehicle Information Center (EVIC), refer to "Electronic Vehicle Information Center (EVIC)/Personal Settings (Customer-Programmable Features)" in "Understanding Your Instrument Panel" for further information.
- For vehicles not equipped with the EVIC, perform the following procedure:

1. Close all doors and place the key in the ignition.
2. Cycle the ignition switch between LOCK and ON/RUN and then back to LOCK four times ending up in the LOCK position.
3. Press the power door UNLOCK switch to unlock the doors.
4. A single chime will indicate the completion of the programming.

NOTE: This feature will not be functional until the vehicle has been driven and the shift lever returned to the PARK position.

5. Repeat these steps if you want to return this feature to its previous setting.

NOTE: Use the Automatic Unlock Doors On Exit feature in accordance with local laws.

WINDOWS

Power Windows

The window controls on the driver's door trim panel operate the door windows and the rear quarter windows.

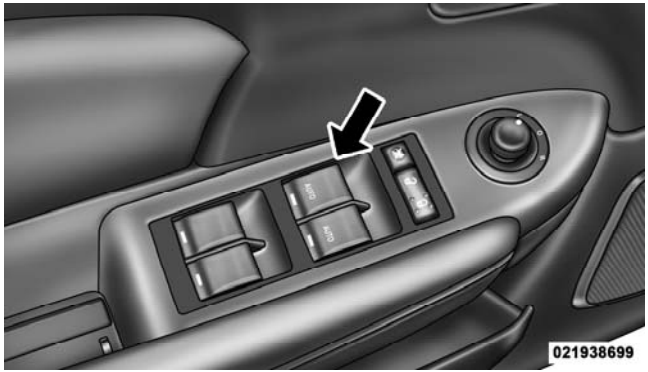

Power Window Switches

There is a single window control on the passenger's door trim panel, which operates the passenger door window. The window controls will operate when the ignition switch is turned to the ON/RUN or ACC position, and when the accessory delay feature is active.

NOTE:

- If a fluttering noise is heard from the rear seat belts while driving with the windows down, safely bring the vehicle to a stop and buckle the rear seat belts over the empty seats. This will keep tension on the seat belts and remove the fluttering condition.

WARNING!

Never leave children in a vehicle, with the keys in the ignition switch. Occupants, particularly unattended children, can become entrapped by the windows while operating the power window switches. Such entrapment may result in serious injury or death.

Smart Glass Feature

The door window will lower slightly if the window is fully up when opening the door. The window will return

to its full up position after closing the door. This action allows the door to open without resistance and prevents window and top seal damage.

Auto Window Down — If Equipped

The front window controls on the driver and passenger door trim panels have an Auto-Down feature. These switches are labeled AUTO to indicate this capability. Push the window switch past the first detent, release, and the window will go down automatically.

To open the window part way, push the window switch to the first detent and release it when you want the window to stop.

To cancel the Auto-Down movement, operate the switch either in the up or down direction and release the switch.

For vehicles not equipped with the Electronic Vehicle Information Center (EVIC), the power window switches will remain active for 45 seconds after the ignition switch is turned to the LOCK position. Opening either door will cancel this feature.

For vehicles equipped with EVIC, the power window switches will remain active for up to 10 minutes after the ignition switch is turned to the LOCK position. Opening either door will cancel this feature. The time for this feature is programmable. Refer to "Electronic Vehicle Information Center (EVIC)/Personal Settings (Customer-Programmable Features)" in "Understanding Your Instrument Panel" for further information.

Reset Window Smart Glass Feature for Opening/Closing the Door

If the vehicle battery goes dead, the window Smart Glass Feature for opening and closing the door will be disabled. To reactivate the window Smart Glass Feature, perform the following steps after vehicle power is restored.

1. Lower all four windows to the full open position.
2. Press and hold the Power Top Switch in the Close direction. Once the Power Top becomes fully closed, all four windows will start closing.
3. Continue to hold the Power Top Switch an additional two seconds after the windows are fully closed.
4. Push all the window switches down firmly to open the windows completely and continue to hold the switch down for an additional two seconds after the window is fully open.

Window Lockout Switch

The window lockout switch on the driver's door trim panel allows you to disable the window control on the passenger door. To disable the window control on the passenger door, press and release the window LOCK button (setting it in the down position). To enable the window control, press and release the window LOCK button again (setting it in the up position).

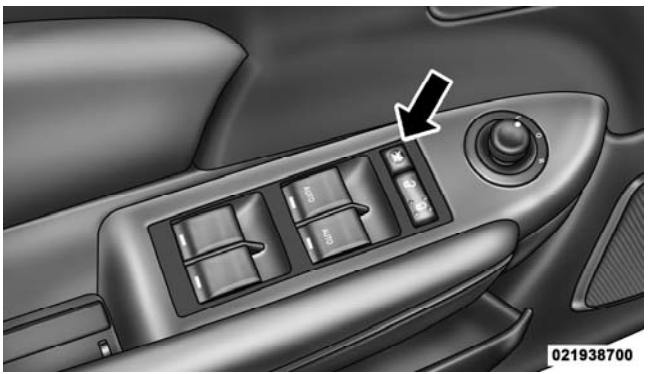

Window Lockout Switch

Wind Buffeting

Wind buffeting can be described as the perception of pressure on the ears or a helicopter-type sound in the ears. Your vehicle may exhibit wind buffeting with one window down in certain open or partially open positions. This is a normal occurrence and can be minimized. If the buffeting occurs with one window open, then open both windows together to minimize the buffeting.

TRUNK LOCK AND RELEASE

To unlatch the trunk lid from inside the vehicle, press and release the TRUNK RELEASE Button located on the instrument panel to the left of the steering wheel.

NOTE: The convertible top must be either closed and latched or open and latched to release the trunk.

Trunk Release Button

The trunk release button on the dash will be disabled if the vehicle is locked by pressing the power door lock switch or by pressing the LOCK button on the Remote Keyless Entry (RKE) transmitter. The trunk release button will be enabled when the vehicle is unlocked by the RKE or if the key is inserted into the ignition and turned to ON/RUN or START.

NOTE: This provides a locked area in the vehicle even if the convertible top is open.

To unlatch the trunk lid from outside the vehicle, press and release the TRUNK RELEASE button on the RKE transmitter two times.

With the ignition switch in the ON/RUN position, the word "dECK" will display in the odometer indicating the trunk is open. The odometer display will reappear once the trunk is closed or if the trip button is pressed.

With the ignition switch in the LOCK position or with the key out, the word "dECK" will display until the trunk is closed.

On vehicles equipped with the Electronic Vehicle Information Center (EVIC), the words "Trunk Ajar" will display.

TRUNK SAFETY WARNING

WARNING!

Do not allow children to have access to the trunk, either by climbing into the trunk from outside, or through the inside of the vehicle. Always close the trunk lid when your vehicle is unattended. Once in the trunk, young children may not be able to escape, even if they entered through the rear seat. If trapped in the trunk, children can die from suffocation or heat stroke.

Trunk Internal Emergency Release

As a security measure, a Trunk Internal Emergency Release lever is built into the trunk latching mechanism. In the event of an individual being locked inside the

trunk, the trunk can be simply opened by pulling on the glow-in-the-dark handle attached to the trunk latching mechanism.

Trunk Internal Emergency Release

OCCUPANT RESTRAINTS

Some of the most important safety features in your vehicle are the restraint systems:

- Three-point lap and shoulder belts for all seating positions
- Advanced Front Air Bags for driver and front passenger
- Supplemental Active Head Restraints (AHR) located on top of the front seats (integrated into the head restraint) — if equipped
- Supplemental Seat-Mounted Side Air Bags (SAB)
- An energy-absorbing steering column and steering wheel
- Knee bolsters/blockers for front seat occupants
- Front seat belts incorporate pretensioners that may enhance occupant protection by managing occupant energy during an impact event
- All seat belt systems (except the driver's) include Automatic Locking Retractors (ALRs), which lock the

seat belt webbing into position by extending the belt all the way out and then adjusting the belt to the desired length to restrain a child seat or secure a large item in a seat

Please pay close attention to the information in this section. It tells you how to use your restraint system properly, to keep you and your passengers as safe as possible.

If you will be carrying children too small for adult-sized seat belts, the seat belts or the Lower Anchors and Tether for CHildren (LATCH) feature also can be used to hold infant and child restraint systems. For more information on LATCH, refer to Lower Anchors and Tether for CHildren (LATCH).

NOTE: The Advanced Front Air Bags have a multistage inflator design. This allows the air bag to have different rates of inflation based on several factors, including the severity and type of collision.

Here are some simple steps you can take to minimize the risk of harm from a deploying air bag:

1. **Children 12 years old and under should always ride buckled up in a rear seat.**

WARNING!

Infants in rear facing child restraints should never ride in the front seat of a vehicle with a passenger Advanced Front Air Bag. An air bag deployment can cause severe injury or death to infants in that position.

Children that are not big enough to wear the vehicle seat belt properly (see section on Child Restraints) should be secured in the rear seat in child restraints or belt-positioning booster seats. Older children who do not use child restraints or belt-positioning booster seats should ride properly buckled up in the rear seat. Never allow

children to slide the shoulder belt behind them or under their arm.

If a child from 1 to 12 years old (not in a rear facing child seat) must ride in the front passenger seat, move the seat as far back as possible and use the proper child restraint. (Refer to "Child Restraints")

You should read the instructions provided with your child restraint to make sure that you are using it properly.

2. **All occupants should always wear their lap and shoulder belts properly.**
3. **The driver and front passenger seats should be moved back as far as practical to allow the Advanced Front Air Bags room to inflate.**
4. **Do not lean against the door or window. If your vehicle has side air bags, and deployment occurs, the side air bags will inflate forcefully into the space between you and the door.**
5. **If the air bag system in this vehicle needs to be modified to accommodate a disabled person, contact the Customer Center. Phone numbers are provided under "If You Need Assistance".**

WARNING!

- **Relying on the air bags alone could lead to more severe injuries in a collision. The air bags work with your seat belt to restrain you properly. In some collisions, the air bags won't deploy at all. Always wear your seat belts even though you have air bags.**

(Continued)

WARNING! (Continued)

- **Being too close to the steering wheel or instrument panel during Advanced Front Air Bag deployment could cause serious injury, including death. Air Bags need room to inflate. Sit back, comfortably extending your arms to reach the steering wheel or instrument panel.**
- **Seat-Mounted Side Air Bags (SAB) need room to inflate. Do not lean against the door or window. Sit upright in the center of the seat.**
- **In a collision, you and your passengers can suffer much greater injuries if you are not properly buckled up. You can strike the interior of your vehicle or other passengers, or you can be thrown out of the vehicle. Always be sure you and others in your vehicle are buckled up properly.**

Buckle up even though you are an excellent driver, even on short trips. Someone on the road may be a poor driver and cause a collision that includes you. This can happen far away from home or on your own street.

Research has shown that seat belts save lives, and they can reduce the seriousness of injuries in a collision. Some of the worst injuries happen when people are thrown from the vehicle. Seat belts reduce the possibility of ejection and the risk of injury caused by striking the inside of the vehicle. Everyone in a motor vehicle should be belted at all times.

Lap/Shoulder Belts

All seating positions in your vehicle are equipped with lap/shoulder belts.

The belt webbing retractor is designed to lock during very sudden stops or collisions. This feature allows the shoulder part of the belt to move freely with you under normal conditions. However, in a collision, the belt will lock and reduce the risk of you striking the inside of the vehicle or being thrown out.

WARNING!

- **Be sure everyone in your vehicle is in a seat and using a seat belt properly.**
- **It is dangerous to ride in a cargo area, inside or outside of a vehicle. In a collision, people riding in these areas are more likely to be seriously injured or killed.**
- **Wearing a seat belt incorrectly is dangerous. Seat belts are designed to go around the large bones of your body. These are the strongest parts of your body and can take the forces of a collision the best.**
- **Wearing your belt in the wrong place could make your injuries in a collision much worse. You might suffer internal injuries, or you could even slide out of part of the belt. Follow these instructions to wear your seat belt safely and to keep your passengers safe, too.**

(Continued)

WARNING! (Continued)

- **Two people should never be belted into a single seat belt. People belted together can crash into one another in a collision, hurting one another badly. Never use a lap/shoulder belt or a lap belt for more than one person, no matter what their size.**

Lap/Shoulder Belt Operating Instructions

1. Enter the vehicle and close the door. Sit back and adjust the front seat.
2. The seat belt latch plate is on the outboard side of the front seat, next to your arm. Grasp the latch plate and pull out the belt. Slide the latch plate up the webbing as far as necessary to allow the belt to go around your lap.

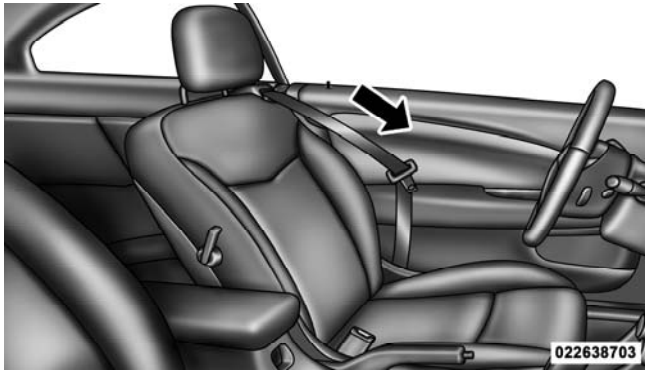

Pulling Out The Latch Plate

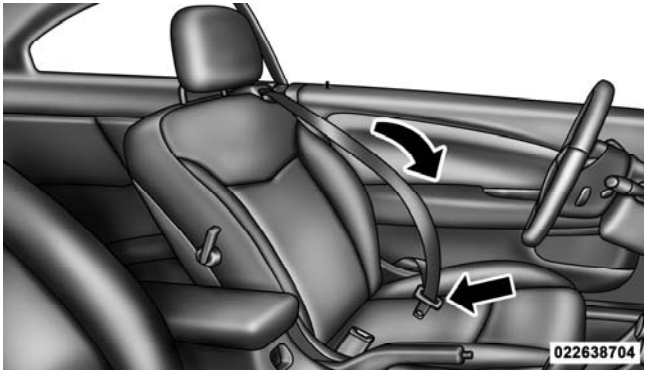

Inserting Latch Plate Into Buckle

3. When the belt is long enough to fit, insert the latch plate into the buckle until you hear a “click.”

WARNING!

- **A belt that is buckled into the wrong buckle will not protect you properly. The lap portion could ride too high on your body, possibly causing internal injuries. Always buckle your belt into the buckle nearest you.**
- **A belt that is loose will not protect you properly. In a sudden stop you could move too far forward, increasing the possibility of injury. Wear your seat belt snugly.**
- **A belt that is worn under your arm is dangerous. Your body could strike the inside surfaces of the vehicle in a collision, increasing head and neck injury. A belt worn under the arm can cause internal injuries. Ribs aren't as strong as shoulder bones. Wear the belt over your shoulder so that the strongest bones will take the force in a collision.**

(Continued)

WARNING! (Continued)

- **A shoulder belt placed behind you will not protect you from injury during a collision. You are more likely to hit your head in a collision if you do not wear your shoulder belt. The lap and shoulder belt are meant to be used together.**

4. Position the lap belt across your thighs, below your abdomen. To remove slack in the lap belt portion, pull up on the shoulder belt. To loosen the lap belt if it is too tight, lift up on the shoulder belt and pull on the lap belt. A snug belt reduces the risk of sliding under the belt in a collision.

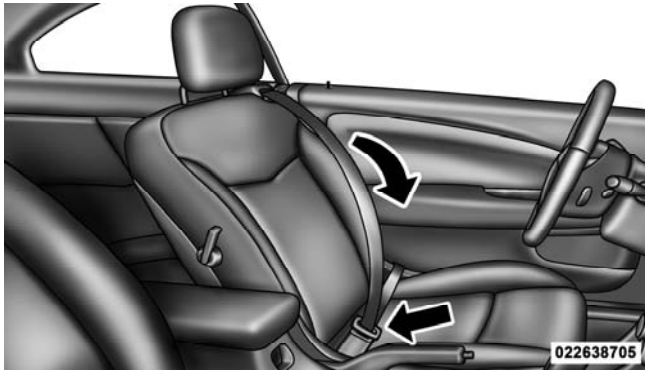

Positioning The Lap Belt

WARNING!

- **A lap belt worn too high can increase the risk of injury in a collision. The belt forces won't be at the strong hip and pelvic bones, but across your abdomen. Always wear the lap part of your seat belt as low as possible and keep it snug.**
- **A twisted belt may not protect you properly. In a collision, it could even cut into you. Be sure the belt is straight. If you can't straighten a belt in your vehicle, take it to your authorized dealer immediately and have it fixed.**

5. Position the shoulder belt on your chest so that it is comfortable and not resting on your neck. The retractor will withdraw any slack in the belt.

6. To release the belt, push the red button on the buckle. The belt will automatically retract to its stowed position. If necessary, slide the latch plate down the webbing to allow the belt to retract fully.

WARNING!

A frayed or torn belt could rip apart in a collision and leave you with no protection. Inspect the belt system periodically, checking for cuts, frays, or loose parts. Damaged parts must be replaced immediately. Do not disassemble or modify the system. Seat belt assemblies must be replaced after a collision if they have been damaged (bent retractor, torn webbing, etc.).

Lap/Shoulder Belt Untwisting Procedure

Use the following procedure to untwist a twisted lap/shoulder belt.

1. Position the latch plate as close as possible to the anchor point.
2. At about 6 to 12 in (15 to 30 cm) above the latch plate, grasp and twist the belt webbing 180° to create a fold that begins immediately above the latch plate.
3. Slide the latch plate upward over the folded webbing. The folded webbing must enter the slot at the top of the latch plate.
4. Continue to slide the latch plate up until it clears the folded webbing.

Seat Belts In Passenger Seating Positions

The seat belts in the passenger seating positions are equipped with Automatic Locking Retractors (ALR) which are used to secure a child restraint system. For additional information, refer to “Installing Child Restraints Using The Vehicle Seat Belt” under the “Child

Restraints" section. The chart below defines the type of feature for each seating position.

	Driver	Center	Passenger
First Row	N/A	N/A	ALR
Second Row	ALR	N/A	ALR

- N/A — Not Applicable
- ALR — Automatic Locking Retractor

If the passenger seating position is equipped with an ALR and is being used for normal usage:

Only pull the belt webbing out far enough to comfortably wrap around the occupant's mid-section so as to not activate the ALR. If the ALR is activated, you will hear a ratcheting sound as the belt retracts. Allow the webbing to retract completely in this case and then carefully pull out only the amount of webbing necessary to comfortably wrap around the occupant's mid-section. Slide the latch plate into the buckle until you hear a "click."

Automatic Locking Retractor Mode (ALR) — If Equipped

In this mode, the shoulder belt is automatically prelocked. The belt will still retract to remove any slack in the shoulder belt. The Automatic Locking Mode is available on all passenger-seating positions with a combination lap/shoulder belt. Use the Automatic Locking Mode anytime a child safety seat is installed in a seating position that has a belt with this feature. Children 12 years old and under should always be properly restrained in the rear seat.

How To Engage The Automatic Locking Mode

1. Buckle the combination lap and shoulder belt.
2. Grasp the shoulder portion and pull downward until the entire belt is extracted.
3. Allow the belt to retract. As the belt retracts, you will hear a clicking sound. This indicates the safety belt is now in the Automatic Locking Mode.

How To Disengage The Automatic Locking Mode

Unbuckle the combination lap/shoulder belt and allow it to retract completely to disengage the Automatic Locking Mode and activate the vehicle sensitive (emergency) locking mode.

WARNING!

- **The belt and retractor assembly must be replaced if the seat belt assembly Automatic Locking Retractor (ALR) feature or any other seat belt function is not working properly when checked according to the procedures in the Service Manual.**
- **Failure to replace the belt and retractor assembly could increase the risk of injury in collisions.**

Energy Management Feature

This vehicle has a safety belt system with an Energy Management feature in the front seating positions to help further reduce the risk of injury in the event of a head-on collision.

This safety belt system has a retractor assembly that is designed to release webbing in a controlled manner. This feature is designed to help reduce the belt force acting on the occupant's chest.

Seat Belt Pretensioners

The seat belts for both front seating positions are equipped with pretensioning devices that are designed to remove slack from the seat belt in the event of a collision. These devices may improve the performance of the seat belt by assuring that the belt is tight about the occupant early in a collision. Pretensioners work for all size occupants, including those in child restraints.

NOTE: These devices are not a substitute for proper seat belt placement by the occupant. The seat belt still must be worn snugly and positioned properly.

The pretensioners are triggered by the Occupant Restraint Controller (ORC). Like the air bags, the pretensioners are single use items. A deployed pretensioner or a deployed air bag must be replaced immediately.

Supplemental Active Head Restraints (AHR) — If Equipped

These head restraints are passive, deployable components, and vehicles with this equipment cannot be readily identified by any markings, only through visual inspection of the head restraint. The head restraint will be split in two halves, with the front half being soft foam and trim, the back half being decorative plastic.

How The Active Head Restraints (AHR) Work

The Occupant Restraint Controller (ORC) determines whether the severity, or type of rear impact will require the Active Head Restraints (AHR) to deploy. If a rear impact requires deployment, both the driver and front passenger seat AHRs will be deployed.

When AHRs deploy during a rear impact, the front half of the head restraint extends forward to minimize the gap between the back of the occupant's head and the AHR.

This system is designed to help prevent or reduce the extent of injuries to the driver and front passenger in certain types of rear impacts.

NOTE: The Active Head Restraints (AHR) may or may not deploy in the event of a front or side impact. However if during a front impact, a secondary rear impact occurs, the AHR may deploy based on the severity and type of the impact.

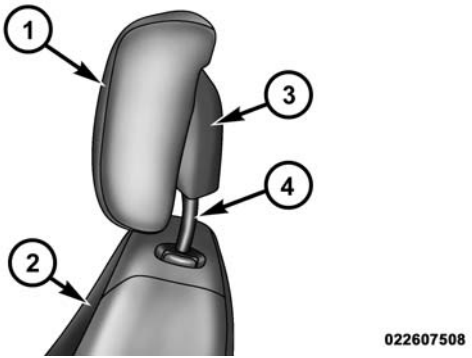

Active Head Restraint (AHR) Components

1 — Head Restraint Front Half (Soft Foam and Trim)	3 — Head Restraint Back Half (Decorative Plastic Rear Cover)
2 — Seatback	4 — Head Restraint Guide Tubes

CAUTION!

All occupants, including the driver, should not operate a vehicle or sit in a vehicle's seat until the head restraints are placed in their proper positions in order to minimize the risk of neck injury in the event of a collision.

NOTE: For more information on properly adjusting and positioning the head restraint, refer to "Adjusting Active Head Restraints" in "Understanding The Features Of Your Vehicle".

Resetting Active Head Restraints (AHR)

If the Active Head Restraints are triggered in a collision, you must reset the head restraint on the driver's and front passenger seat. You can recognize when the Active Head Restraint has been triggered by the fact that they have moved forward (as shown in step three of the resetting procedure).

1. Grasp the deployed AHR from the rear seat.

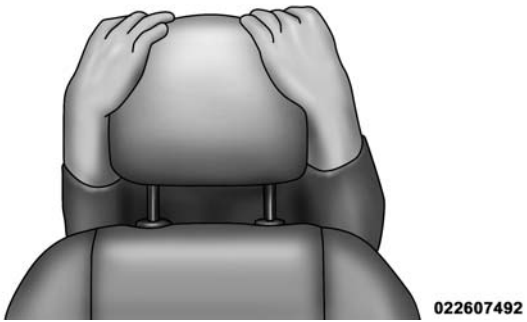

Hand Positioning Points On AHR

2. Position the hands on the top of the deployed AHR at a comfortable position.

3. Pull **down** then **rearward** towards the rear of the vehicle then **down** to engage the locking mechanism.

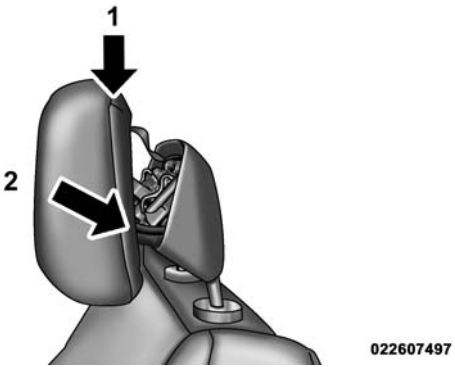

1 — Downward Movement
2 — Rearward Movement

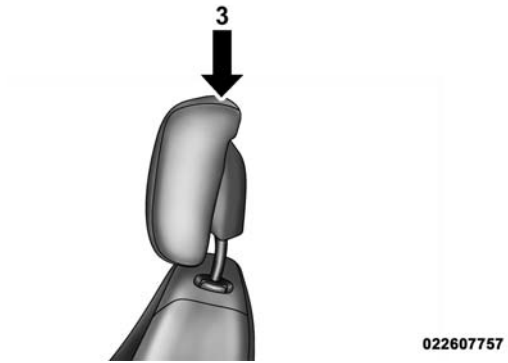

3 — Final Downward Movement To Engage Locking Mechanism

4. The AHR front soft foam and trim half should lock into the back decorative plastic half.

AHR In Reset Position

NOTE:

- If you have difficulties or problems resetting the Active Head Restraints, see an authorized dealer.
- For safety reasons, have the Active Head Restraints checked by a qualified specialist at an authorized dealer.

Enhanced Seat Belt Use Reminder System (BeltAlert®)

BeltAlert® is a feature intended to remind the driver and front passenger (if equipped with front passenger BeltAlert®) to fasten their seat belts. The feature is active whenever the ignition is on. If the driver or front seat passenger is unbelted, the Seat Belt Reminder Light will turn on and remain on until both front seat belts are fastened.

The BeltAlert® warning sequence begins after the vehicle speed is over 5 mph (8 km/h), by blinking the Seat Belt Reminder Light and sounding an intermittent chime. Once the sequence starts, it will continue for the entire duration or until the respective seatbelts are fastened. After the sequence completes, the Seat Belt Reminder

Light remains illuminated until the respective seat belts are fastened. The driver should instruct all other occupants to fasten their seat belts. If a front seat belt is unbuckled while traveling at speeds greater than 5 mph (8 km/h), BeltAlert® will provide both audio and visual notification.

The front passenger seat BeltAlert® is not active when the front passenger seat is unoccupied. BeltAlert® may be triggered when an animal or heavy object is on the front passenger seat or when the seat is folded flat (if equipped). It is recommended that pets be restrained in the rear seat in pet harnesses or pet carriers that are secured by seat belts, and cargo is properly stowed.

BeltAlert® can be enabled or disabled by your authorized dealer. Chrysler Group LLC does not recommend deactivating BeltAlert®.

NOTE: Although BeltAlert® has been deactivated, the Seat Belt Reminder Light will continue to illuminate while the driver's or front passenger (if equipped with BeltAlert®) seat belt remains unfastened.

Seat Belts And Pregnant Women

We recommend that pregnant women use the seat belts throughout their pregnancy. Keeping the mother safe is the best way to keep the baby safe.

Pregnant women should wear the lap part of the belt across the thighs and as snug across the hips as possible. Keep the belt low so that it does not come across the abdomen. That way the strong bones of the hips will take the force if there is a collision.

Seat Belt Extender

If a seat belt is too short, even when fully extended, your authorized dealer can provide you with a seat belt extender. This extender should be used only if the

existing belt is not long enough. When it is not required, remove the extender, and store it.

WARNING!

Using a seat belt extender when not needed can increase the risk of injury in a collision. Only use when the seat belt is not long enough when it is worn low and snug, and in the recommended seating positions. Remove and store the extender when not needed.

Supplemental Restraint System (SRS) — Air Bags

This vehicle has Advanced Front Air Bags for both the driver and front passenger as a supplement to the seat belt restraint systems. The driver's Advanced Front Air Bag is mounted in the center of the steering wheel. The passenger's Advanced Front Air Bag is mounted in the instrument panel, above the glove compartment. The words SRS AIRBAG are embossed on the air bag covers.

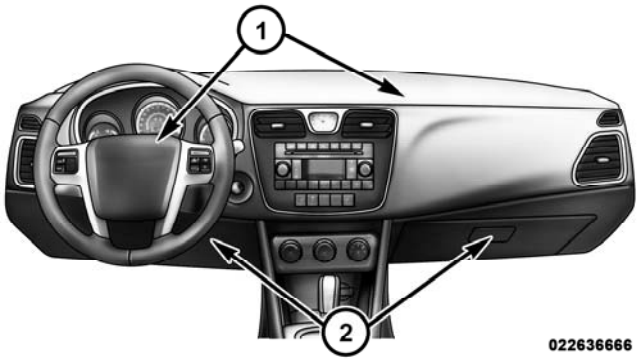

Advanced Front Air Bag And Knee Bolster Locations

1 — Driver And Passenger Advanced Front Air Bags
2 — Knee Bolster

NOTE: These air bags are certified to the new Federal regulations for Advanced Air Bags.

The Advanced Front Air Bags have a multistage inflator design. This allows the air bag to have different rates of inflation that are based on several factors, including the severity and type of collision.

This vehicle may be equipped with driver and/or front passenger seat track position sensors that may adjust the inflation rate of the Advanced Front Air Bags based upon seat position.

This vehicle may be equipped with a driver and/or front passenger seat belt buckle switch that detects whether the driver or front passenger seat belt is fastened. The seat belt buckle switch may adjust the inflation rate of the Advanced Front Air Bags.

This vehicle is equipped with Supplemental Seat-Mounted Side Air Bags (SAB) to provide enhanced protection for an occupant during a side impact. The SABs are located in the outboard side of the front seats.

NOTE:

- Air Bag covers may not be obvious in the interior trim, but they will open during air bag deployment.
- After any collision, the vehicle should be taken to an authorized dealer immediately.

Air Bag System Components

Your vehicle may be equipped with the following air bag system components:

- Occupant Restraint Controller (ORC)
- Air Bag Warning Light
- Steering Wheel and Column
- Instrument Panel
- Knee Impact Bolster

- Driver Advanced Front Air Bag
- Passenger Advanced Front Air Bag
- Supplemental Seat-Mounted Side Air Bags (SAB)
- Front and Side Impact Sensors
- Front Seat Belt Pretensioners, Seat Belt Buckle Switch, and Seat Track Position Sensors

Advanced Front Air Bag Features

The Advanced Front Air Bag system has multistage driver and front passenger air bags. This system provides output appropriate to the severity and type of collision as determined by the Occupant Restraint Controller (ORC), which may receive information from the front impact sensors.

The first stage inflator is triggered immediately during an impact that requires air bag deployment. This low output is used in less severe collisions. A higher energy output is used for more severe collisions.

WARNING!

- **No objects should be placed over or near the air bag on the instrument panel, because any such objects could cause harm if the vehicle is in a collision severe enough to cause the air bag to inflate.**
- **Do not put anything on or around the air bag covers or attempt to open them manually. You may damage the air bags and you could be injured because the air bags may no longer be functional. The protective covers for the air bag cushions are designed to open only when the air bags are inflating.**

(Continued)

WARNING! (Continued)

- **Do not drill, cut or tamper with the knee bolster in any way.**
- **Do not mount any accessories to the knee bolster such as alarm lights, stereos, citizen band radios, etc.**

Supplemental Seat-Mounted Side Air Bags (SAB)

Supplemental Seat-Mounted Side Air Bags (SAB) may provide enhanced protection to help protect an occupant during a side impact. The SAB is marked with an air bag label sewn into the outboard side of the front seats.

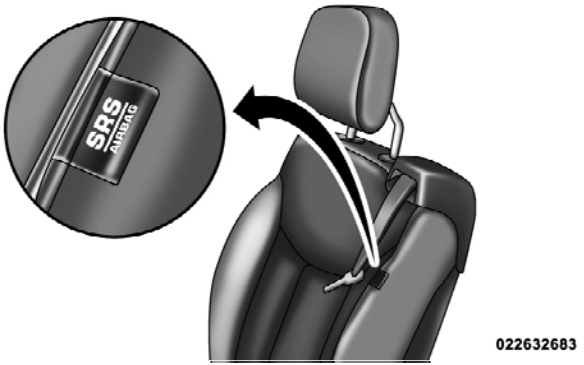

Supplemental Seat-Mounted Side Air Bag Label

When the air bag deploys, it opens the seam between the front and side of the seat's trim cover. Each air bag deploys independently; a left side impact deploys the left air bag only and a right-side impact deploys the right air bag only.

WARNING!

Do not use accessory seat covers or place objects between you and the side air bags; the performance could be adversely affected and/or objects could be pushed into you, causing serious injury.

Knee Impact Bolsters

The Knee Impact Bolster helps protect the knees of the front passenger, and position the front occupant for the best interaction with the Advanced Front Air Bag.

Along with seat belts and pretensioners, Advanced Front Air Bags work with the bolsters to provide improved protection for the driver and front passenger. Side air bags also work with seat belts to improve occupant protection.

Air Bag Deployment Sensors And Controls

Occupant Restraint Controller (ORC)

The ORC is part of a Federally regulated safety system required for this vehicle.

The ORC determines if deployment of the front and/or side air bags in a frontal or side collision is required. Based on the impact sensor's signals, a central electronic ORC deploys the Advanced Front Air Bags, Supplemental Seat-Mounted Side Air Bags (SAB), and front seat belt pretensioners, as required, depending on several factors, including the severity and type of impact.

Advanced Front Air Bags are designed to provide additional protection by supplementing the seat belts in certain frontal collisions depending on several factors, including the severity and type of collision. Advanced Front Air Bags are not expected to reduce the risk of injury in rear, side, or rollover collisions.

The Advanced Front Air Bags will not deploy in all frontal collisions, including some that may produce substantial vehicle damage — for example, some pole collisions, truck underrides, and angle offset collisions. On the other hand, depending on the type and location of impact, Advanced Front Air Bags may deploy in crashes with little vehicle front-end damage but that produce a severe initial deceleration.

The side air bags will not deploy in all side collisions. Side air bag deployment will depend on several factors, including the severity and type of collision.

Because air bag sensors measure vehicle deceleration over time, vehicle speed and damage by themselves are not good indicators of whether or not an air bag should have deployed.

Seat belts are necessary for your protection in all collisions, and also are needed to help keep you in position, away from an inflating air bag.

The ORC monitors the readiness of the electronic parts of the air bag system whenever the ignition switch is in the START or ON/RUN position. If the key is in the OFF position, in the ACC position, or not in the ignition, the air bag system is not on and the air bags will not inflate.

The ORC contains a backup power supply system that may deploy the air bags even if the battery loses power or it becomes disconnected prior to deployment.

Also, the ORC turns on the Air Bag Warning Light in the instrument panel for approximately four to eight seconds for a self-check when the ignition is first turned on. After the self-check, the Air Bag Warning Light will turn off. If the ORC detects a malfunction in any part of the system, it turns on the Air Bag Warning Light, either momentarily or continuously. A single chime will sound if the light comes on again after initial startup.

It also includes diagnostics that will illuminate the instrument cluster Air Bag Warning Light if a malfunction is noted that could affect the air bag system. The diagnostics also record the nature of the malfunction.

WARNING!

Ignoring the Air Bag Warning Light in your instrument panel could mean you won't have the air bags to protect you in a collision. If the light does not come on as a bulb check when the ignition is first turned on, stays on after you start the vehicle, or if it comes on as you drive, have an authorized dealer service the air bag system immediately.

Driver And Passenger Advanced Front Air Bag Inflator Units

The Driver and Passenger Advanced Front Air Bag Inflator Units are located in the center of the steering wheel and on the right side of the instrument panel. When the ORC detects a collision requiring the Advanced Front Air Bags, it signals the inflator units. A large quantity of non-toxic gas is generated to inflate the Advanced Front Air Bags. Different air bag inflation rates are possible, based on several factors, including the collision type and severity. The steering wheel hub trim cover and the upper right side of the instrument panel separate and fold out of the way as the air bags inflate to their full size. The air bags fully inflate in about 50 to 70 milliseconds. This is about half of the time it takes to blink your eyes. The air bags then quickly deflate while helping to restrain the driver and front passenger.

The Advanced Front Air Bag gas is vented through the vent holes in the sides of the air bag. In this way, the air bags do not interfere with your control of the vehicle.

Supplemental Seat-Mounted Side Air Bag (SAB) Inflator Units

The Supplemental Seat-Mounted Side Air Bags (SAB) are designed to activate only in certain side collisions.

The ORC determines if a side collision requires the side air bags to inflate, based on the severity and type of collision.

Based on the severity and type of collision, the side air bag inflator on the crash side of the vehicle may be triggered, releasing a quantity of non-toxic gas. The inflating SAB exits through the seat seam into the space between the occupant and the door. The SAB fully inflate in about 10 milliseconds. The side air bag moves at a very high speed and with such a high force that it could injure you if you are not seated properly, or if items are positioned in the area where the side air bag inflates. This especially applies to children.

Front And Side Impact Sensors

In front and side impacts, impact sensors can aid the ORC in determining appropriate response to impact events.

Enhanced Accident Response System

In the event of an impact causing air bag deployment, if the communication network remains intact, and the power remains intact, depending on the nature of the event the ORC will determine whether to have the Enhanced Accident Response System perform the following functions:

- Cut off fuel to the engine.
- Flash hazard lights as long as the battery has power or until the ignition key is turned off.
- Turn on the interior lights, which remain on as long as the battery has power or until the ignition key is removed.

- Unlock the doors automatically.

In order to reset the Enhanced Accident Response System functions after an event, the ignition switch must be changed from IGN ON to IGN OFF.

If A Deployment Occurs

The Advanced Front Air Bags are designed to deflate immediately after deployment.

NOTE: Front and/or side air bags will not deploy in all collisions. This does not mean something is wrong with the air bag system.

If you do have a collision, which deploys the air bags, any or all of the following may occur:

- The nylon air bag material may sometimes cause abrasions and/or skin reddening to the driver and front passenger as the air bags deploy and unfold. The abrasions are similar to friction rope burns or those you might get sliding along a carpet or gymnasium floor. They are not caused by contact with chemicals. They are not permanent and normally heal quickly. However, if you haven't healed significantly within a few days, or if you have any blistering, see your doctor immediately.
- As the air bags deflate, you may see some smoke-like particles. The particles are a normal by-product of the process that generates the non-toxic gas used for air bag inflation. These airborne particles may irritate the skin, eyes, nose, or throat. If you have skin or eye irritation, rinse the area with cool water. For nose or throat irritation, move to fresh air. If the irritation continues, see your doctor. If these particles settle on your clothing, follow the garment manufacturer's instructions for cleaning.

Do not drive your vehicle after the air bags have deployed. If you are involved in another collision, the air bags will not be in place to protect you.

WARNING!

Deployed air bags and seat belt pretensioners cannot protect you in another collision. Have the air bags, seat belt pretensioners, and the front seat belt retractor assemblies replaced by an authorized dealer immediately. Also, have the Occupant Restraint Controller System serviced as well.

Maintaining Your Air Bag System

WARNING!

- **Modifications to any part of the air bag system could cause it to fail when you need it. You could be injured if the air bag system is not there to protect you. Do not modify the components or wiring, including adding any kind of badges or stickers to the steering wheel hub trim cover or the upper right side of the instrument panel. Do not modify the front bumper, vehicle body structure, or add aftermarket side steps or running boards.**
- **It is dangerous to try to repair any part of the air bag system yourself. Be sure to tell anyone who works on your vehicle that it has an air bag system.**

(Continued)

WARNING! (Continued)

- **Do not attempt to modify any part of your air bag system. The air bag may inflate accidentally or may not function properly if modifications are made. Take your vehicle to an authorized dealer for any air bag system service. If your seat, including your trim cover and cushion, needs to be serviced in any way (including removal or loosening/tightening of seat attachment bolts), take the vehicle to your authorized dealer. Only manufacturer approved seat accessories may be used. If it is necessary to modify the air bag system for persons with disabilities, contact your authorized dealer.**

Air Bag Warning Light

You will want to have the air bags ready to inflate for your protection in a collision. The Air Bag Warning Light monitors the internal circuits and interconnecting wiring associated with air bag system electrical components. While the air bag system is designed to be maintenance free. If any of the following occurs, have an authorized dealer service the air bag system immediately.

- The Air Bag Warning Light does not come on during the four to eight seconds when the ignition switch is first turned to the ON/RUN position.
- The Air Bag Warning Light remains on after the four to eight-second interval.
- The Air Bag Warning Light comes on intermittently or remains on while driving.

NOTE: If the speedometer, tachometer, or any engine related gauges are not working, the Occupant Restraint Controller (ORC) may also be disabled. The air bags may not be ready to inflate for your protection. Promptly check the fuse block for blown fuses. Refer to the label located on the inside of the fuse block cover for the proper air bag fuses. See your authorized dealer if the fuse is good.

Event Data Recorder (EDR)

This vehicle is equipped with an event data recorder (EDR). The main purpose of an EDR is to record, in certain crash or near crash-like situations, such as an air bag deployment or hitting a road obstacle, data that will assist in understanding how a vehicle's systems performed. The EDR is designed to record data related to vehicle dynamics and safety systems for a short period of time, typically 30 seconds or less. The EDR in this vehicle is designed to record such data as:

- How various systems in your vehicle were operating;
- Whether or not the driver and passenger safety belts were buckled/fastened;
- How far (if at all) the driver was depressing the accelerator and/or brake pedal; and,
- How fast the vehicle was traveling.

These data can help provide a better understanding of the circumstances in which crashes and injuries occur.

NOTE: EDR data are recorded by your vehicle only if a non-trivial crash situation occurs; no data are recorded by the EDR under normal driving conditions and no personal data (e.g., name, gender, age, and crash location) are recorded. However, other parties, such as law enforcement, could combine the EDR data with the type of personally identifying data routinely acquired during a crash investigation.

To read data recorded by an EDR, special equipment is required, and access to the vehicle or the EDR is needed. In addition to the vehicle manufacturer, other parties, such as law enforcement, that have the special equipment, can read the information if they have access to the vehicle or the EDR.

Child Restraints

Everyone in your vehicle needs to be buckled up at all times, including babies and children. Every state in the United States, and every Canadian province, requires that small children ride in proper restraint systems. This is the law, and you can be prosecuted for ignoring it.

Children 12 years or younger should ride properly buckled up in a rear seat, if available. According to crash statistics, children are safer when properly restrained in the rear seats rather than in the front.

There are different sizes and types of restraints for children from newborn size to the child almost large enough for an adult safety belt. Always check the child seat Owner's Manual to make sure you have the correct seat for your child.

Before buying any restraint system, make sure that it has a label certifying that it meets all applicable Safety Standards. You should also make sure that you can install it in the vehicle where you will use it.

NOTE: For additional information, refer to www.seatcheck.org or call 1–866–SEATCHECK. Canadian residents should refer to Transport Canada's website for additional information: http://www.tc.gc.ca/eng/roadsafety/safedrivers-childsafety-index-53.htm

WARNING!

In a collision, an unrestrained child can become a projectile inside the vehicle. The force required to

(Continued)

WARNING! (Continued)

hold even an infant on your lap could become so great that you could not hold the child, no matter how strong you are. The child and others could be badly injured. Any child riding in your vehicle should be in a proper restraint for the child's size.

Summary Of Recommendations For Restraining Children In Vehicles

	Child Size, Height, Weight or Age	**Recommended Type of Child Restraint**
Infants and Toddlers	Children who are two years old or younger and who have not reached the height or weight limits of their child restraint	Either an Infant Carrier or a Convertible Child Restraint, facing rearward in the rear seat of the vehicle
Small Children	Children who are at least two years old or who have out-grown the height or weight limit of their rear-facing child restraint	Forward-Facing Child Restraint with a five-point Harness, facing forward in the rear seat of the vehicle

	Child Size, Height, Weight or Age	Recommended Type of Child Restraint
Larger Children	Children who have out-grown their forward-facing child restraint, but are too small to properly fit the vehicle's seat belt	Belt Positioning Booster Seat and the vehicle seat belt, seated in the rear seat of the vehicle
Children Too Large for Child Restraints	Children 12 years old or younger, who have out-grown the height or weight limit of their booster seat	Vehicle Seat Belt, seated in the rear seat of the vehicle

Infants And Child Restraints

Safety experts recommend that children ride rearward-facing in the vehicle until they are two years old or until they reach either the height or weight limit of their rear facing child safety seat. Two types of child restraints can be used rearward-facing: infant carriers and convertible child seats.

The infant carrier is only used rearward-facing in the vehicle. It is recommended for children from birth until they reach the weight or height limit of the infant carrier.

Convertible child seats can be used either rearward-facing or forward-facing in the vehicle. Convertible child seats often have a higher weight limit in the rearward-facing direction than infant carriers do, so they can be used rearward-facing by children who have outgrown their infant carrier but are still less than at least two years old. Children should remain rearward-facing until they reach the highest weight or height allowed by their convertible child seat.

WARNING!

- **Never place a rear facing infant seat in front of an air bag. A deploying passenger Advanced Front Air Bag can cause death or serious injury to a child 12 years or younger, including a child in a rearward facing infant seat.**
- **Only use a rearward-facing child restraint in a rear seat.**

Older Children And Child Restraints

Children who are two years old or who have outgrown their rear-facing convertible child seat can ride forward-facing in the vehicle. Forward-facing child seats and convertible child seats used in the forward-facing direction are for children who are over two years old or who have outgrown the rear-facing weight or height limit of their rear-facing convertible child seat. Children should remain in a forward-facing child seat with a harness for as long as possible, up to the highest weight or height allowed by the child seat.

All children whose weight or height is above the forward-facing limit for the child seat should use a belt-positioning booster seat until the vehicle's seat belts fit properly. If the child cannot sit with knees bent over the vehicle's seat cushion while the child's back is against the seatback, they should use a belt-positioning booster seat. The child and belt-positioning booster seat are held in the vehicle by the seat belt.

WARNING!

- **Improper installation can lead to failure of an infant or child restraint. It could come loose in a collision. The child could be badly injured or killed. Follow the child restraint manufacturer's directions exactly when installing an infant or child restraint.**
- **When your child restraint is not in use, secure it in the vehicle with the seat belt or LATCH anchorages, or remove it from the vehicle. Do not leave it loose in the vehicle. In a sudden stop or accident, it could strike the occupants or seatbacks and cause serious personal injury.**

Children Too Large For Booster Seats

Children who are large enough to wear the shoulder belt comfortably, and whose legs are long enough to bend over the front of the seat when their back is against the seatback, should use the seat belt in a rear seat. Use this simple 5-step test to decide whether the child can use the vehicle's seat belt alone:

1. Can the child sit all the way back against the back of the vehicle seat?
2. Do the child's knees bend comfortably over the front of the vehicle seat – while they are still sitting all the way back?
3. Does the shoulder belt cross the child's shoulder between their neck and arm?
4. Is the lap part of the belt as low as possible, touching the child's thighs and not their stomach?
5. Can the child stay seated like this for the whole trip?

If the answer to any of these questions was "no," then the child still needs to use a booster seat in this vehicle. If the

child is using the lap/shoulder belt, check belt fit periodically. A child's squirming or slouching can move the belt out of position. If the shoulder belt contacts the face or neck, move the child closer to the center of the vehicle. Never allow a child to put the shoulder belt under an arm or behind their back.

Recommendations For Attaching Child Restraints

Restraint Type	Combined Weight of the Child + Child Restraint	Use any attachment method shown with an "X" Below			
		LATCH – Lower Anchors Only	Seat Belt Only	LATCH – Lower Anchors + Top Tether Anchor	Seat Belt + Top Tether Anchor
Rear-Facing Child Restraint	Up to 65 lbs (29.5 kg)	X	X		
Rear-Facing Child Restraint	More than 65 lbs (29.5 kg)		X		
Forward-Facing Child Restraint	Up to 65 lbs (29.5 kg)			X	X
Forward-Facing Child Restraint	More than 65 lbs (29.5 kg)		X		

Lower Anchors and Tethers for Children (LATCH) Restraint System

022668173

Your vehicle is equipped with the child restraint anchorage system called LATCH, which stands for Lower Anchors and Tethers for CHildren. The LATCH system has three vehicle anchor points for installing LATCH-equipped child seats. There are two lower anchorages located at the back of the seat cushion where it meets the seatback and one top tether anchorage located behind the seating position. These anchorages are used to install LATCH-equipped child seats without using the vehicle's seat belts. Some seating positions may have a top tether anchorage but no lower anchorages. In these seating positions, the seat belt must be used with the top tether anchorage to install the child restraint. Please see the following table for more information.

LATCH Positions For Installing Child Restraints In This Vehicle

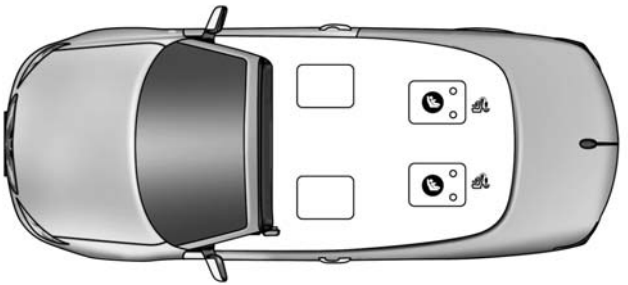

022669041

Lower Anchorage Symbol 2 anchorages per seating position

Top Tether Anchorage Symbol

What is the weight limit (child's weight + weight of the child restraint) for using the LATCH anchorage system to attach the child restraint?	65 lbs (29.5 kg)	Use the LATCH anchorage system until the combined weight of the child and the child restraint is 65 lbs (29.5 kg). Use the seat belt alone instead of the LATCH anchorage system once the combined weight is more than 65 lbs (29.5 kg).
Can the LATCH anchorages and the seat belt be used together to attach a rear-facing or forward-facing child restraint?	No	Do not use the seat belt when you use the LATCH anchorage system to attach a rear-facing or forward-facing child restraint.
Can two child restraints be attached using a common lower LATCH anchorage?	No	Never "share" a LATCH anchorage with two or more child restraints. If the center position does not have dedicated LATCH lower anchorages, use the seat belt to install a child seat in the center position next to a child seat using the LATCH anchorages in an outboard position.

Can the rear-facing child restraint touch the back of the front passenger seat?	Yes	The child seat may touch the back of the front passenger seat if the child restraint manufacturer also allows contact. See your child restraint owner's manual for more information.
Can the head restraints be removed?	No	

Locating The LATCH Anchorages

The lower anchorages are round bars that are found at the rear of the seat cushion where it meets the seatback, below the anchorage symbols on the seatback. They are just visible when you lean into the rear seat to install the child restraint. You will easily feel them if you run your finger along gap between the seatback and seat cushion.

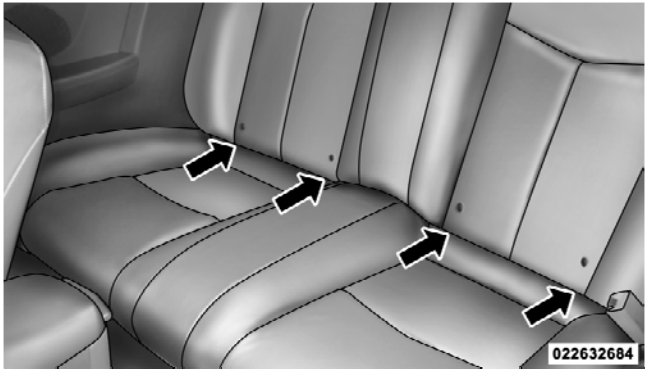

Rear Seat LATCH Anchorages

Locating The LATCH Anchorages

In addition, there are tether strap anchorages behind each rear seating position. Access ports to the tether anchors are located in the panel between the rear seat and the rear window. The tether anchors are underneath access covers in the carpet covering the back of the seat where you see the tether anchorage symbol.

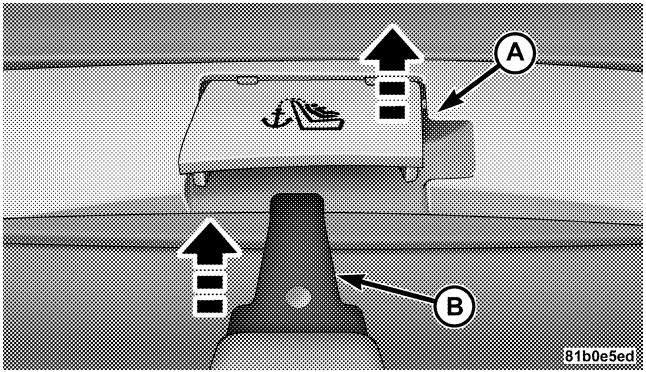

Child Tether Access Port Cover

A — Cover	B — Tether Strap Hook

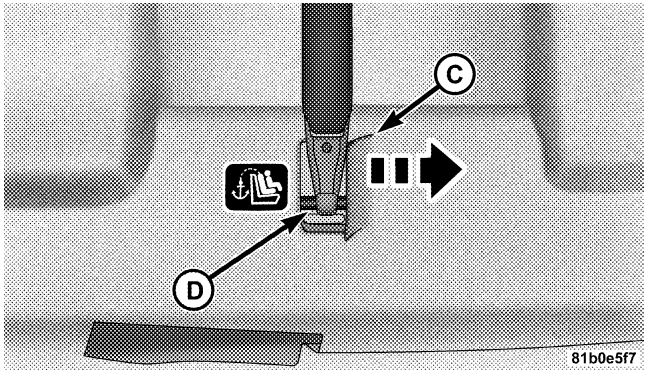

Child Tether Anchor

C — Attaching Strap	D — Tether Anchor

LATCH-compatible child restraint systems will be equipped with a rigid bar or a flexible strap on each side. Each will have a hook or connector to attach to the lower anchorage and a way to tighten the connection to the anchorage. Forward-facing child restraints and some rear-facing infant restraints will also be equipped with a tether strap. The tether strap will have a hook at the end to attach to the top tether anchorage and a way to tighten the strap after it is attached to the anchorage.

Center Seat LATCH

WARNING!

This vehicle does not have a center seating position. Do not use the center lower LATCH anchorages to install a child seat in the center of the back seat.

Always follow the directions of the child restraint manufacturer when installing your child restraint. Not all child restraint systems will be installed as described here.

To Install A LATCH-compatible Child Restraint:

1. If the selected seating position has a Switchable Automatic Locking Retractor (ALR) seat belt, stow the seat belt, following the instructions below. See the section "Installing Child Restraints Using the Vehicle Seat Belt" to check what type of seat belt each seating position has.
2. Loosen the adjusters on the lower straps and on the tether strap of the child seat so that you can more easily attach the hooks or connectors to the vehicle anchorages.
3. Place the child seat between the lower anchorages for that seating position. For some second row seats, you may need to recline the seat and / or raise the head restraint to get a better fit.
4. Attach the lower hooks or connectors of the child restraint to the lower anchorages in the selected seating position.
5. If the child restraint has a tether strap, connect it to the top tether anchorage. See the section "Installing Child Restraints Using the Top Tether Anchorage" for directions to attach a tether anchor.
6. Tighten all of the straps as you push the child restraint rearward and downward into the seat. Remove slack in the straps according to the child restraint manufacturer's instructions.
7. Test that the child restraint is installed tightly by pulling back and forth on the child seat at the belt path. It should not move more than 1 inch (25.4 mm) in any direction.

How To Stow An Unused ALR Seatbelt

When using the LATCH attaching system to install a child restraint, stow all ALR seat belts that are not being used by other occupants or being used to secure child restraints. An unused belt could injure a child if they play with it and accidentally lock the seatbelt retractor. Before installing a child restraint using the LATCH system, buckle the seat belt behind the child restraint and out of the child's reach. If the buckled seat belt interferes with the child restraint installation, instead of buckling it behind the child restraint, route the seat belt through the child restraint belt path and then buckle it. Do not lock the seatbelt. Remind all children in the vehicle that the seat belts are not toys and that they should not play with them.

WARNING!

Improper installation of a child restraint to the LATCH anchorages can lead to failure of the restraint. The child could be badly injured or killed. Follow the child restraint manufacturer's directions exactly when installing an infant or child restraint.

Installing Child Restraints Using The Vehicle Seat Belt

The seat belts in the passenger seating positions are equipped with either a Switchable Automatic Locking Retractor (ALR) or a cinching latch plate or both. Both types of seat belts are designed to keep the lap portion of the seat belt tight around the child restraint so that it is not necessary to use a locking clip. The ALR retractor can be "switched" into a locked mode by pulling all of the webbing out of the retractor and then letting the webbing retract back into the retractor. If it is locked, the ALR will make a clicking noise while the webbing is pulled back into the retractor. For additional information on ALR, refer to the "Automatic Locking Mode" description under "Occupant Restraints." The cinching latch plate is designed to hold the lap portion of the seatbelt tight when webbing is pulled tight and straight through a child restraint's belt path. Please see the table below and the following sections for more information about both types of seat belts.

Lap/Shoulder Belt Systems for Installing Child Restraints in this Vehicle

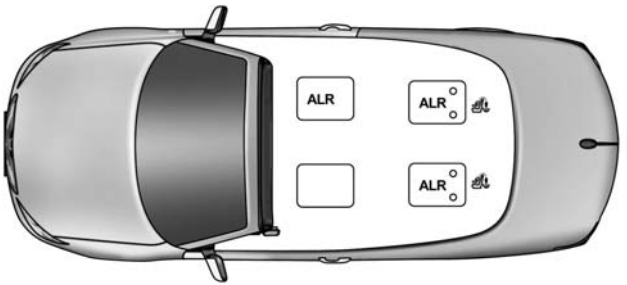

022669040

What is the weight limit (child's weight + weight of the child restraint) for using the Tether Anchor with the seat belt to attach a forward facing child restraint?	65 lbs (29.5 kg)	The Tether Anchor can be used with the seat belt until the combined weight of the child and the child restraint is 65 lbs (29.5 kg). Use the seat belt without the Tether Anchor once the combined weight is more than 65 lbs (29.5 kg).
Can the rear-facing child restraint touch the back of the front passenger seat?	Yes	Contact between the front passenger seat and the child restraint is allowed, if the child restraint manufacturer also allows contact.
Can the head restraints be removed?	No	
Can the buckle stalk be twisted to tighten the seat belt against the belt path of the child restraint?	Yes	In positions with cinching latch plates (CINCH), the buckle stalk may be twisted up to 3 full turns. Do not twist the buckle stalk in a seating position with an ALR retractor.

Installing A Child Restraint with a Switchable Automatic Locking Retractor (ALR):

1. Place the child seat in the center of the seating position. For some second row seats, you may need to recline the seat and/or raise the head restraint to get a better fit.
2. Pull enough of the seat belt webbing from the retractor to pass it through the belt path of the child restraint. Do not twist the belt webbing in the belt path.
3. Slide the latch plate into the buckle until you hear a "click."
4. Pull on the webbing to make the lap portion tight against the child seat.
5. To lock the seat belt, pull down on the shoulder part of the belt until you have pulled all the seat belt webbing out of the retractor. Then, allow the webbing to retract back into the retractor. As the webbing retracts, you will hear a clicking sound. This means the seat belt is now in the Automatic Locking mode.
6. Try to pull the webbing out of the retractor. If it is locked, you should not be able to pull out any webbing. If the retractor is not locked, repeat step 5.
7. Finally, pull up on any excess webbing to tighten the lap portion around the child restraint while you push the child restraint rearward and downward into the vehicle seat.

8. If the child restraint has a top tether strap and the seating position has a top tether anchorage, connect the tether strap to the anchorage and tighten the tether strap. Refer to "Lower Anchors and Tethers for Children (LATCH) Restraint System" for directions to attach a tether anchor.

9. Test that the child restraint is installed tightly by pulling back and forth on the child seat at the belt path. It should not move more than 1 inch (25.4 mm) in any direction.

Any seat belt system will loosen with time, so check the belt occasionally, and pull it tight if necessary.

Installing A Child Restraint With A Cinching Latch Plate (CINCH) — If Equipped

1. Place the child seat in the center of the seating position. For some second row seats, you may need to recline the seat and / or raise the head restraint to get a better fit.

2. Next, pull enough of the seat belt webbing from the retractor to pass it through the belt path of the child restraint. Do not twist the belt webbing in the belt path.

3. Slide the latch plate into the buckle until you hear a "click."

4. Finally, pull up on any excess webbing to tighten the lap portion around the child restraint while you push the child restraint rearward and downward into the vehicle seat.

5. If the child restraint has a top tether strap and the seating position has a top tether anchorage, connect the tether strap to the anchorage and tighten the tether strap. Refer to "Lower Anchors and Tethers for Children (LATCH) Restraint System" for directions to attach a tether anchor.
6. Test that the child restraint is installed tightly by pulling back and forth on the child seat at the belt path. It should not move more than 1 inch (25.4 mm) in any direction.

Any seat belt system will loosen with time, so check the belt occasionally, and pull it tight if necessary.

If the buckle or the cinching latch plate is too close to the belt path opening of the child restraint, you may have trouble tightening the seat belt. If this happens, disconnect the latch plate from the buckle and twist the short buckle-end belt up to three full turns to shorten it. Insert the latch plate into the buckle with the release button facing out, away from the child restraint. Repeat steps 4 to 6, above, to complete the installation of the child restraint.

If the belt still cannot be tightened after you shorten the buckle, disconnect the latch plate from the buckle, turn the buckle around one half turn, and insert the latch plate into the buckle again. If you still cannot make the child restraint installation tight, try a different seating position.

Installing Child Restraints Using The Top Tether Anchorage

1. If lowered, raise the convertible top. The convertible top must be in the UP position to access the tether anchor.
2. Open the access port cover (A) behind the seat where you are placing the child restraint.

3. Push the tether strap and hook (B) through the access port and down into the trunk. Route the tether strap to provide the most direct path from the child seat to the anchor.

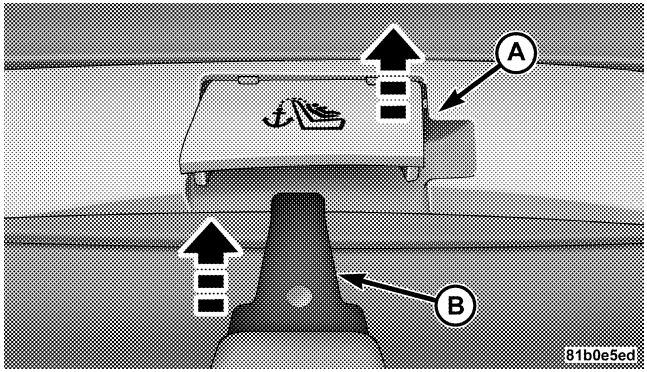

Child Tether Access Port Cover

4. Open the access cover (C) on the carpet covering the back of the seat and attach the tether strap hook (D) to the anchor.

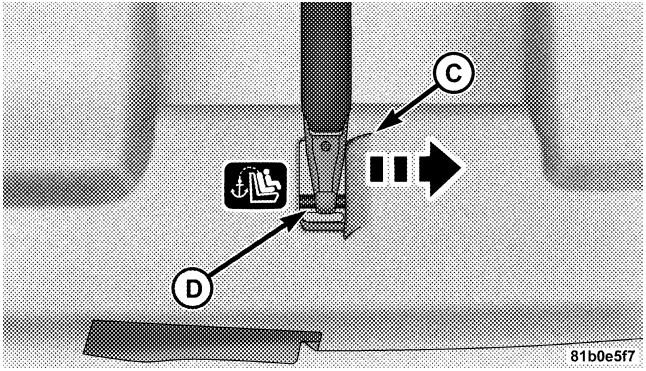

Child Tether Anchor

5. Remove slack in the tether strap according to the child restraint manufacturer's instructions.

Transporting Pets

Air Bags deploying in the front seat could harm your pet. An unrestrained pet will be thrown about and possibly injured, or injure a passenger during panic braking or in a collision.

Pets should be restrained in the rear seat in pet harnesses or pet carriers that are secured by seat belts.

ENGINE BREAK-IN RECOMMENDATIONS

A long break-in period is not required for the engine and drivetrain (transmission and axle) in your vehicle.

Drive moderately during the first 300 miles (500 km). After the initial 60 miles (100 km), speeds up to 50 or 55 mph (80 or 90 km/h) are desirable.

While cruising, brief full-throttle acceleration within the limits of local traffic laws contributes to a good break-in. Wide-open throttle acceleration in low gear can be detrimental and should be avoided.

The engine oil installed in the engine at the factory is a high-quality energy conserving type lubricant. Oil changes should be consistent with anticipated climate conditions under which vehicle operations will occur. For the recommended viscosity and quality grades, refer to "Maintenance Procedures" in "Maintaining Your Vehicle".

CAUTION!

Never use Non-Detergent Oil or Straight Mineral Oil in the engine or damage may result.

NOTE: A new engine may consume some oil during its first few thousand miles (kilometers) of operation. This should be considered a normal part of the break-in and not interpreted as an indication of difficulty.

SAFETY TIPS

Transporting Passengers

NEVER TRANSPORT PASSENGERS IN THE CARGO AREA.

WARNING!

- **Do not leave children or animals inside parked vehicles in hot weather. Interior heat build-up may cause serious injury or death.**

(Continued)

WARNING! (Continued)

- **It is extremely dangerous to ride in a cargo area, inside or outside of a vehicle. In a collision, people riding in these areas are more likely to be seriously injured or killed.**
- **Do not allow people to ride in any area of your vehicle that is not equipped with seats and seat belts.**
- **Be sure everyone in your vehicle is in a seat and using a seat belt properly.**

Exhaust Gas

WARNING!

Exhaust gases can injure or kill. They contain carbon monoxide (CO), which is colorless and odorless. Breathing it can make you unconscious and can

(Continued)

WARNING! (Continued)

eventually poison you. To avoid breathing (CO), follow these safety tips:

- **Do not run the engine in a closed garage or in confined areas any longer than needed to move your vehicle in or out of the area.**
- **If you are required to drive with the trunk/liftgate open, make sure that all windows are closed and the climate control BLOWER switch is set at high speed. DO NOT use the recirculation mode.**
- **If it is necessary to sit in a parked vehicle with the engine running, adjust your heating or cooling controls to force outside air into the vehicle. Set the blower at high speed.**

The best protection against carbon monoxide entry into the vehicle body is a properly maintained engine exhaust system.

Whenever a change is noticed in the sound of the exhaust system, when exhaust fumes can be detected inside the vehicle, or when the underside or rear of the vehicle is damaged, have a competent mechanic inspect the complete exhaust system and adjacent body areas for broken, damaged, deteriorated, or mispositioned parts. Open seams or loose connections could permit exhaust fumes to seep into the passenger compartment. In addition, inspect the exhaust system each time the vehicle is raised for lubrication or oil change. Replace as required.

Safety Checks You Should Make Inside The Vehicle

Seat Belts

Inspect the belt system periodically, checking for cuts, frays, and loose parts. Damaged parts must be replaced immediately. Do not disassemble or modify the system.

Front seat belt assemblies must be replaced after a collision. Rear seat belt assemblies must be replaced after a collision if they have been damaged (i.e., bent retractor, torn webbing, etc.). If there is any question regarding belt or retractor condition, replace the belt.

Air Bag Warning Light

The light should come on and remain on for four to eight seconds as a bulb check when the ignition switch is first turned ON. If the light is not lit during starting, see your authorized dealer. If the light stays on, flickers, or comes on while driving, have the system checked by an authorized dealer.

Defroster

Check operation by selecting the defrost mode and place the blower control on high speed. You should be able to feel the air directed against the windshield. See your authorized dealer for service if your defroster is inoperable.

Floor Mat Safety Information

Always use floor mats designed to fit the footwell of your vehicle. Use only floor mats that leave the pedal area unobstructed and that are firmly secured so that they cannot slip out of position and interfere with the pedals or impair safe operation of your vehicle in other ways.

WARNING!

Pedals that cannot move freely can cause loss of vehicle control and increase the risk of serious personal injury.

- **Always make sure that floor mats are properly attached to the floor mat fasteners.**

(Continued)

WARNING! (Continued)

- **Never place or install floor mats or other floor coverings in the vehicle that cannot be properly secured to prevent them from moving and interfering with the pedals or the ability to control the vehicle.**
- **Never put floor mats or other floor coverings on top of already installed floor mats. Additional floor mats and other coverings will reduce the size of the pedal area and interfere with the pedals.**
- **Check mounting of mats on a regular basis. Always properly reinstall and secure floor mats that have been removed for cleaning.**

(Continued)

WARNING! (Continued)

- **Always make sure that objects cannot fall into the driver footwell while the vehicle is moving. Objects can become trapped under the brake pedal and accelerator pedal causing a loss of vehicle control.**
- **If required, mounting posts must be properly installed, if not equipped from the factory.**

Failure to properly follow floor mat installation or mounting can cause interference with the brake pedal and accelerator pedal operation causing loss of control of the vehicle.

Periodic Safety Checks You Should Make Outside The Vehicle

Tires

Examine tires for excessive tread wear and uneven wear patterns. Check for stones, nails, glass, or other objects lodged in the tread or sidewall. Inspect the tread for cuts and cracks. Inspect sidewalls for cuts, cracks and bulges. Check the wheel nuts for tightness. Check the tires (including spare) for proper cold inflation pressure.

Lights

Have someone observe the operation of brake lights and exterior lights while you work the controls. Check turn signal and high beam indicator lights on the instrument panel.

Door Latches

Check for positive closing, latching, and locking.

Fluid Leaks

Check area under vehicle after overnight parking for fuel, engine coolant, oil, or other fluid leaks. Also, if gasoline fumes are detected or if fuel, power steering fluid, or brake fluid leaks are suspected, the cause should be located and corrected immediately.

UNDERSTANDING THE FEATURES OF YOUR VEHICLE

CONTENTS

■ CONVERTIBLE TOP OPERATION 101

- □ Power Convertible Top Usage Precautions 102
- □ Cargo Shield 106
- □ Power Convertible Top Controls 108
- □ Lowering the Power Convertible Top. 109
- □ Raising The Power Convertible Top 110
- □ Wind Stop — If Equipped 111
- □ Power Convertible Top Operation And Warning Messages 114
- □ Emergency Bypass Mode (To Raise The Top Only) 124

■ MIRRORS 125

- □ Inside Day/Night Mirror 125
- □ Automatic Dimming Mirror — If Equipped . . .126
- □ Power Mirrors 127
- □ Adjusting Side View Mirrors 128
- □ Exterior Mirrors Folding Feature 128
- □ Heated Mirrors — If Equipped 128
- □ Vanity Mirror — If Equipped 129

■ Uconnect™ Phone — IF EQUIPPED 129

- □ Operation 131

- Phone Call Features 139
- Uconnect™ Phone Features 142
- Advanced Phone Connectivity 147
- Things You Should Know About Your Uconnect™ Phone 149
- General Information 159

■ VOICE COMMAND — IF EQUIPPED 160

- Voice Command System Operation 160
- Commands 161
- Voice Training 165

■ SEATS 165

- Power Seats 166
- Heated Seats — If Equipped 168
- Recliner Adjustment 169
- Lumbar Support — If Equipped 170
- Easy Entry System 170
- Head Restraints 171
- Active Head Restraints — Front Seats 172
- Head Restraints — Rear Seats 175

■ TO OPEN AND CLOSE THE HOOD 175

■ LIGHTS 177

- Multifunction Lever 177
- Headlights And Parking Lights 178
- Automatic Headlights — If Equipped 178
- Headlights With Wipers (Available With Automatic Headlights Only) 179

- Headlight Time Delay 179
- Lights On Reminder 179
- Turn Signals 180
- Lane Change Assist 180
- High/Low Beam Switch 180
- Flash-To-Pass 181
- Fog Lights — If Equipped 181
- Daytime Running Lights — If Equipped 182
- Instrument Panel Dimmer 182
- Interior Lights 183
- Battery Saver Feature 184

■ WINDSHIELD WIPERS AND WASHERS 184

- Intermittent Wiper System 185
- Windshield Washers 186
- Mist Feature 187
- Headlights With Wipers Feature (Available With Automatic Headlights Only) 187

■ TILT/TELESCOPING STEERING COLUMN . . .188

■ ELECTRONIC SPEED CONTROL — IF EQUIPPED 189

- To Activate 190
- To Set A Desired Speed 190
- To Deactivate 191
- To Resume Speed 191
- To Vary The Speed Setting 191
- To Accelerate For Passing 191

■ GARAGE DOOR OPENER — IF EQUIPPED . . .192

- Before You Begin Programming HomeLink® . . .194
- Programming A Rolling Code 194
- Programming A Non-Rolling Code 196
- Canadian/Gate Operator Programming 198
- Using HomeLink® 199
- Security 199
- Troubleshooting Tips 200
- General Information. 201

■ ELECTRICAL POWER OUTLETS 202

■ CIGAR LIGHTER AND ASH RECEIVER — IF EQUIPPED 205

■ CUPHOLDERS 206

- Front Seat Cupholder 206
- Rear Seat Cupholders 207

■ STORAGE 208

- Glovebox Storage Compartment 208

■ CONSOLE FEATURES 208

- Storage 208

■ CARGO AREA FEATURES 210

- Ski Pass-Through. 212

■ REAR WINDOW FEATURES 212

- Rear Window Defroster 212

CONVERTIBLE TOP OPERATION

CAUTION!

Failure to follow these cautions may cause interior water damage, stains or mildew on the top material:

- **Avoid high-pressure car washes, as they can damage the top material. Also, increased water pressure may force water past the weather strips.**
- **Remove any standing water from the top and dry the surface before opening it. Operating the top, opening a door or lowering a window while the top is wet may allow water to drip into the vehicles interior.**
- **Use care when washing the vehicle, water pressure directed at the weather strip seals may cause water to leak into the vehicles interior.**

WARNING!

The convertible top does not provide the structural protection that a reinforced metal roof does and the fabric top cannot be expected to prevent the ejection of the occupants in a collision. Therefore, it is important that all occupants wear their seat belts at all times. Death or serious injuries could occur if you are ejected from the vehicle during a collision.

You can lower or raise the power convertible top from inside the vehicle or lower the top remotely using the Remote Keyless Entry (RKE) transmitter. Either operation takes approximately 30 seconds. The entire process, including unlatching or latching the top at the windshield header is automatic.

The top does take up some space in the trunk when retracted. However, the trunk will still hold a significant amount of cargo.

When operating the power convertible top, the trunk lid will pivot at the rear of the vehicle, swing open by the rear window, and then pivot backward. This allows room for the top to retract into or unfold from its stowage area in the trunk.

When lowering the top, the system extends the hard tonneau cover, which stows conveniently underneath the trunk lid. The tonneau cover closes the area between the rear seats and the trunk lid to conceal the top when stowed.

When raising the top, the system retracts the hard tonneau cover back into its stowage area underneath the trunk lid.

To complete either operation, the trunk lid returns to its normal position and then latches.

Spring-loaded flipper doors, which provide clearance for the linkage, close off notches in the quarter trim panels when the top is down.

Power Convertible Top Usage Precautions

NOTE:

- The convertible top will not operate unless the vehicle is stationary, the cargo shield is positioned correctly, and the trunk lid is closed and latched. In addition, the system prohibits lowering the top when ambient temperature is at 0°F (-18°C) or lower, However, the system allows you to raise the top at ambient temperatures as low as -40°F (-40°C).
- Do not attempt to lower the top when frost, ice, or snow may be present, this could cause damage or prevent the top from stowing completely.

- The Power Top Control Module (PTCM) monitors and controls lowering and raising of the top. A series of micro-switches verify that operations are complete before allowing the next stage of lowering or raising operation.
- Opening and closing the top consecutively without the engine running may run the battery down.
- If a fluttering noise is heard from the rear seat belts while driving with the top down, safely bring the vehicle to a stop and buckle the rear seat belts over the empty seats. This will keep tension on the seat belts and remove the fluttering condition.

CAUTION!

- **Correctly position the cargo shield in the trunk before stowing the top. Doing so closes a switch that allows top operation (stowing) to proceed. If the switch is not closed, a warning message displays in the instrument cluster to notify the driver.**
- **Always place items carefully into the trunk.**
- **Do not push items too far into the trunk, particularly when the top is retracted into its stowage area in the trunk.**
- **Do not use the area on top of the tonneau cover for storage.**

Failure to follow these cautions can cause damage to the convertible top components, trunk contents, cargo shield, and the vehicle interior.

CAUTION!

Before operating the power top:

- **Always check on top of the tonneau cover area to be sure that it is clear of debris or other items.**
- **Make sure the ambient temperature is above 0°F (-18°C).**
- **Never attempt to lower a frozen convertible top. Wait until the top is thawed before lowering it into the stowage compartment. Lowering a cloth top at temperatures below 32°F (0°C) should be avoided.**
- **Make sure the convertible top is dry before lowering it into the stowage compartment. Lowering the top when damp, wet, or dirty can cause stains, mildew, and damage to the inside of your vehicle.**
- **Make sure there is sufficient clearance of at least 7.5 ft. (2.2 m) for the top to move up.**

(Continued)

CAUTION! (Continued)

- **To prevent striking a low ceiling or automatic door opener with the top, it is strongly recommended that you do not operate the power top inside a garage or parking structure.**

Failure to follow these cautions can cause damage to the convertible top components, trunk contents, and the vehicle interior.

CAUTION!

- **Do not operate the power top with the hydraulic pump valve open.**
- **Do not allow the top to remain in the suspended position. After approximately 10 minutes in the suspended position, the hydraulic pressure will release, which will allow the top and the trunk lid to lower. Pressing the power top switch will cancel this operation.**
- **Always use a normal ice scraper to remove snow or ice from the rear window. Use of a sharp object or other tools could scratch the panels (hard top) or tear the fabric (soft top) when removing snow or ice.**
- **Always close the top when leaving your vehicle so as not to leave the interior exposed to potentially damaging outdoor conditions.**

(Continued)

CAUTION! (Continued)

- **Do not leave the top lowered for several weeks at a time. Close it occasionally to prevent discoloration in the folds of the fabric and to allow the creases to smooth out. This is especially important if the top was stowed when not completely dry.**

Failure to follow these cautions can cause damage to the convertible top components, trunk contents, and the vehicle interior:

WARNING!

Failure to follow these warnings can result in injuries that are serious or fatal to you, your passengers, and others around you:

- **Before operating the power top, make sure that no moving parts of the convertible top can injure a person or animal.**
- **Never place any extremities (hands, feet, etc.) near the convertible top components, the upper windshield area, the shelf area behind the rear seats, or the convertible top stowage area while raising or lowering the convertible top.**
- **When using the power top button on RKE transmitter, if potential danger exists while lowering the top, release the button immediately to interrupt the operation.**

(Continued)

WARNING! (Continued)

- **When using the power top switch on the instrument panel, if potential danger exists while lowering the top, release the switch immediately to interrupt the operation.**
- **When using the power top switch on the instrument panel, if potential danger exists while raising the top, release the switch immediately to interrupt the operation.**
- **Only drive the vehicle with the convertible top completely closed and latched or fully lowered into its stowage compartment.**
- **Do not operate the power top when the vehicle is in motion.**

Cargo Shield

The cargo shield is located in the trunk. Before lowering the convertible top, you must unfold the cargo shield and

seat the tabs at each end of the cargo shield in the V slots in the trunk liner. Doing so closes a switch that allows top operation. If the switch is not closed, a warning message displays in the instrument cluster to notify the driver.

Positioning The Cargo Shield For Top Operation

Pull the cargo shield toward you to begin unfolding the panels. Grasp the handle in the center of the outermost (top) panel and raise the cargo shield. Then, align and seat the tabs at each end of the cargo shield in the V slots in the trunk liner as shown in the illustration.

CAUTION!

Do not place items on top of the cargo shield. Items placed on cargo protector will interfere with the top during operation and cause excessive damage to the top and cargo shield.

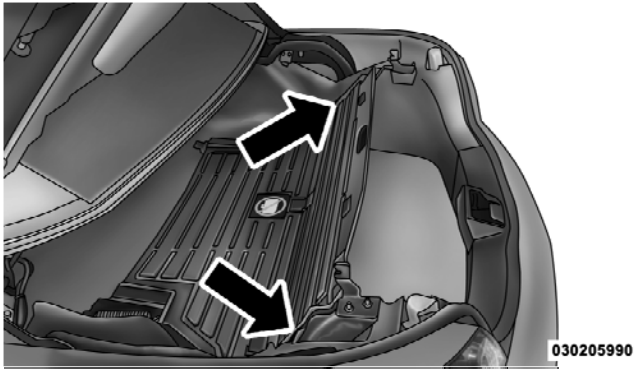

Cargo Shield

Positioning The Cargo Shield For Cargo Storage

To maximize the storage space in the trunk, the cargo shield can be stowed in the forward portion of the trunk.

To stow the cargo shield, grasp the handle of the upright panel of the cargo shield, lifting the pins out of the V slots

in the trunk trim. Continue folding the upright panel forward onto the horizontal panel, then grasp both panels and lift them to the forward, upright position in the trunk.

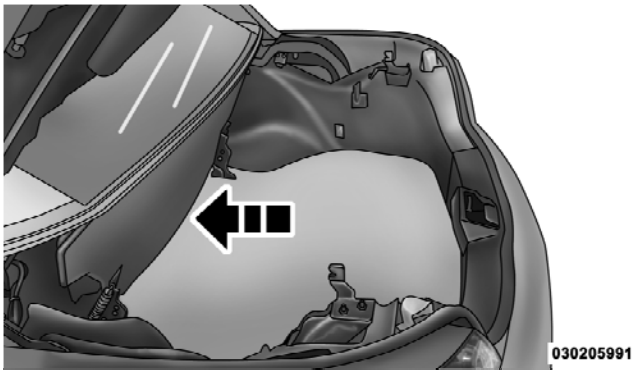

Stowed Cargo Shield

NOTE: The convertible top will NOT operate with the cargo shield in the stowed position.

Power Convertible Top Controls

The power top switch is located on the front of the center console.

There is also a power top button on the Remote Keyless Entry (RKE) transmitter for remotely lowering the power convertible top.

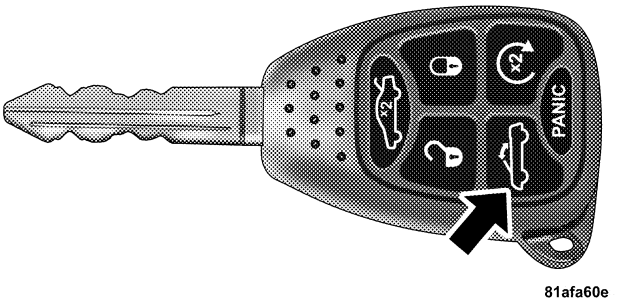

Power Top Button

Lowering the Power Convertible Top

Using The Power Top Switch

NOTE: The power top switch will operate when the ignition switch is turned to the ON or ACC position and when in the power accessory delay.

There are two Top Down switch positions. Press and hold the switch to the first detent. The system will lower all fully raised windows approximately 0.5 in (10 mm), lower the top to its fully retracted position, and then raise the windows. Press and hold the switch to the second detent. The system will lower all four windows and the top to their fully retracted positions.

The driver has to press and hold the convertible top switch during the entire opening cycle, if there is an obstruction and the driver is alerted, the convertible top operation can be stopped by releasing the switch.

Using The Remote Keyless Entry Transmitter

NOTE: Steps 1 – 3 must be performed within five seconds.

1. Press and release the UNLOCK button on the RKE transmitter.

Press and release the POWER TOP button on the RKE transmitter.

2. Press and hold the POWER TOP button until the Power Top and All Windows Down feature is complete.

Raising The Power Convertible Top

Using The Power Top Switch

NOTE: The power top switch will operate when the ignition switch is turned to the ON or ACC position and when in the power accessory delay.

Press and hold the switch in the Top Up position until the operation of raising the top and latching it is complete, which is indicated by the system raising the windows and displaying "TOP DONE" in the odometer or "CONVERTIBLE TOP COMPLETE" in the EVIC (if equipped).

Using The Remote Keyless Entry Transmitter

You cannot use the power top button on the RKE transmitter to raise the power convertible top. You must use the power top switch inside the vehicle to perform this operation.

Manually

Closing the power convertible top manually is a complicated and physically demanding procedure, and it requires a special tool to do so. In the event that you experience a malfunction when operating the power convertible top:

1. Read all of the Notes, Cautions, and Warning found under "Power Convertible Top Usage Precautions" to verify all operating conditions are met.
2. Check for Operation and Warning Messages as described under "Power Convertible Top Operation and Warning Messages." If applicable, perform the related action to correct the condition present.
3. If Steps 1 and 2 do not resolve the problem, refer to "Emergency Bypass Mode".

Wind Stop — If Equipped

The Wind Stop installs in the backseat area of the vehicle. The Wind Stop will not interfere with power top operation. Therefore, it can remain installed when the top is up. However, when not in use, the Wind Stop folds to allow for convenient storage underneath the cargo shield in the trunk.

NOTE: It is recommended that you lower the convertible top before installing or removing the Wind Stop.

Installing The Wind Stop

1. Remove the Wind Stop from the trunk.
2. Unfold the Wind Stop framework.
3. Lay the small frame (1) flat on top of the large frame (2) and snap the two frames together by engaging the frame lock (3).

NOTE: The frames must lie flat on each other in order to snap them together.

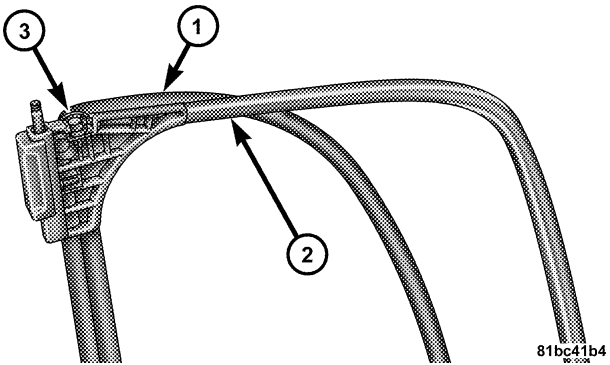

4. Pivot the small frame (1) away from the large frame (2) until the pivot lock (3) engages to lock the two frames in an L shape.

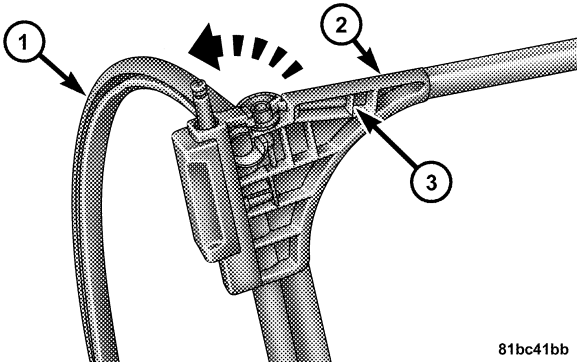

5. Unfold both stems at the rear of the large frame.

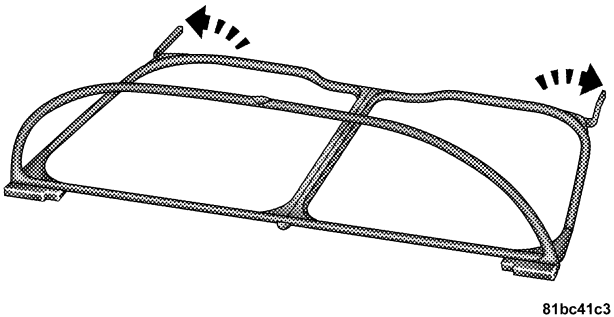

6. Align and insert the stems into the slot in each trim panel.

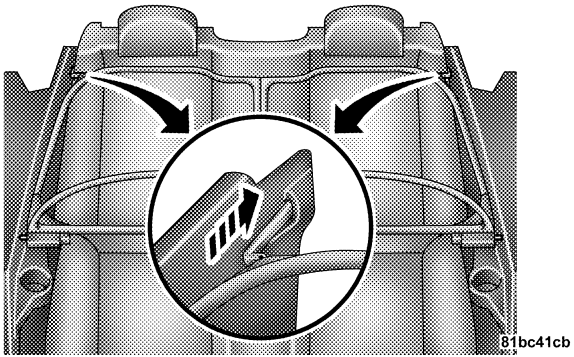

7. Align the pins at the front of the large frame with the hole in each trim panel. Slide the pins outward until fully extended into each hole.

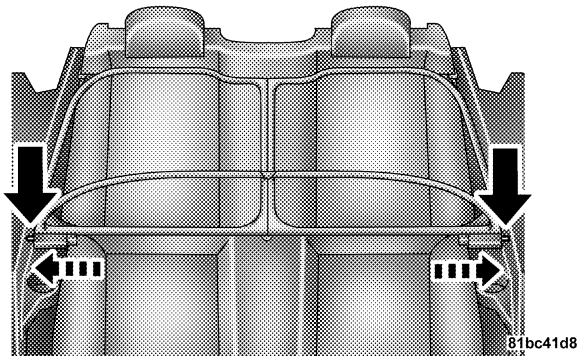

Removing And Storing The Wind Stop

Reverse the installation procedure to remove, fold, and store the Wind Stop. However, note the following before doing so:

Disengage the pivot lock (1) to fold the small frame flat onto the large frame. Disengage the frame lock (2) to disconnect the small frame from the large frame.

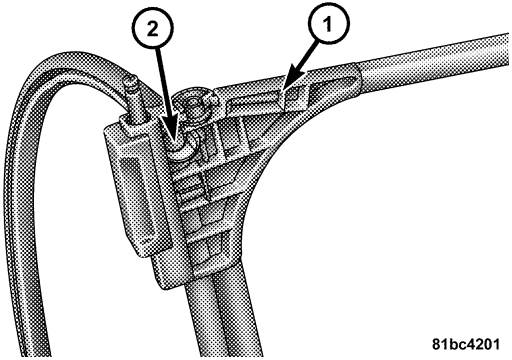

Power Convertible Top Operation And Warning Messages

When the appropriate conditions exist, the PTCM displays various power convertible top operation and warning messages in the Electronic Vehicle Information Center (EVIC) – if equipped, or in the Odometer for vehicles not equipped with the EVIC. Refer to the following chart for message related information:

EVIC Message ♦	EVIC Message Display Time ♦	Odometer Message (< 5 mph [8 km/h]) ♦ ♦	Odometer Message Display Time ♦ ♦	Odometer Message (> 5 mph [8 km/h]) ♦ ♦	Odometer Message Display Time ♦ ♦	Chime	Condi-tion	Operator Action Required
CON-VERTIBLE TOP NOT SECURED	Until Opera-tion is Com-plete	TOP nOT SECUrE	Until Op-eration is Complete	—	—	—	The Sys-tem is Lowering or Rais-ing the Top	—

EVIC Message ♦	EVIC Message Display Time ♦	Odometer Message (< 5 mph [8 km/h]) ♦ ♦	Odometer Message Display Time ♦ ♦	Odometer Message (> 5 mph [8 km/h]) ♦ ♦	Odometer Message Display Time ♦ ♦	Chime	Condition	Operator Action Required
CONVERTIBLE TOP COMPLETE	9 sec.	TOP DONE	Display Scrolls for 6 sec.	—	—	Single Chime	The System Completes Operation of Lowering or Raising the Top	—

EVIC Message ♦	EVIC Message Display Time ♦	Odometer Message (< 5 mph [8 km/h]) ♦ ♦	Odometer Message Display Time ♦ ♦	Odometer Message (> 5 mph [8 km/h]) ♦ ♦	Odometer Message Display Time ♦ ♦	Chime	Condi-tion	Operator Action Required
SECURE CARGO SHIELD	9 sec.	SET CARGO SHIELD	Display Scrolls for 9 sec.	—	—	Single Chime	The Top Fails to Move When Operating the Power Top Con-trol	Position the Cargo Shield in the Trunk to Allow Top Op-eration

EVIC Message ♦	EVIC Message Display Time ♦	Odometer Message (< 5 mph [8 km/h]) ♦ ♦	Odometer Message Display Time ♦ ♦	Odometer Message (> 5 mph [8 km/h]) ♦ ♦	Odometer Message Display Time ♦ ♦	Chime	Condition	Operator Action Required
CONVERTIBLE TOP NOT SECURED	Until Operation is Complete	TOP nOT SECUrE	Until Operation is Complete	TOP nOT SECUrE	Until Operation is Complete	Single Chime	The System Fails to Complete Operation of Lowering or Raising the Top	Cycle Power Top Control

EVIC Message ♦	EVIC Message Display Time ♦	Odometer Message (< 5 mph [8 km/h]) ♦ ♦	Odometer Message Display Time ♦ ♦	Odometer Message (> 5 mph [8 km/h]) ♦ ♦	Odometer Message Display Time ♦ ♦	Chime	Condi-tion	Operator Action Required
SPEED TOO HIGH	9 sec.	SPEED TOO HIGH	Display Scrolls for 9 sec.	TOP	6 sec.	Single Chime	You Are Operating the Power Top at a Vehicle Speed Greater Than 0 mph (0 km/h)	The Top Will Not Operate Unless the Vehicle is Stationary.

EVIC Message ♦	EVIC Message Display Time ♦	Odometer Message (< 5 mph [8 km/h]) ♦ ♦	Odometer Message Display Time ♦ ♦	Odometer Message (> 5 mph [8 km/h]) ♦ ♦	Odometer Message Display Time ♦ ♦	Chime	Condi-tion	Operator Action Required
TRUNK AJAR	Continu-ous	DECK	Continu-ous	DECK	Continu-ous	Single Chime	The Trunk Lid is Un-latched or Open	The Top Will Not Operate Unless the Trunk Lid is Closed

EVIC Message ♦	EVIC Message Display Time ♦	Odometer Message (< 5 mph [8 km/h]) ♦ ♦	Odometer Message Display Time ♦ ♦	Odometer Message (> 5 mph [8 km/h]) ♦ ♦	Odometer Message Display Time ♦ ♦	Chime	Condition	Operator Action Required
CONVERTIBLE TOP MALFUNCTION	6 sec.	TOP FAIL	Display Scrolls for 6 Seconds	TOP	6 sec.	Single Chime	The PTCM Activated the System LOCKOUT Feature	Refer to Foot Note ♦ ♦ ♦

EVIC Message ♦	EVIC Message Display Time ♦	Odometer Message (< 5 mph [8 km/h]) ♦ ♦	Odometer Message Display Time ♦ ♦	Odometer Message (> 5 mph [8 km/h]) ♦ ♦	Odometer Message Display Time ♦ ♦	Chime	Condition	Operator Action Required
CONVERTIBLE TOP MALFUNCTION	Until Fault is No Longer Detected or Repaired	TOP FAIL	Display Scrolls until Fault is No Longer Detected or Repaired	TOP	Display Flashes until Fault is No Longer Detected or Repaired	Single Chime	The PTCM Activated the System LOCKOUT Feature	See your authorized dealer for service

♦ If so equipped.

♦ ♦ For vehicles not equipped with the EVIC.

♦ ♦ ♦ The PTCM will lockout the power convertible top system if the vehicle charging system is malfunctioning, or the battery is run down, or the hydraulic pump is overheating. In addition, the system prohibits lowering the top when ambient temperature is at 0°F (-18°C) or lower and raising the top when ambient temperature is below -40°F (-40°C).

• If you are trying to lower the top and ambient temperature is 0°F (-18°C) or lower, wait until the temperature rises and the top is thawed and dry before operating the power top. A soft top should not be lowered at temperatures below 32°F (0°C).

• If you are trying to raise the top and ambient temperature is below -40°F (-40°C), wait until the temperature rises before operating the power top.

• If the vehicle charging system is malfunctioning, see your authorized dealer for service.

• If the battery is run down, have it recharged and tested at your authorized dealer.

• Hydraulic pump overheating can occur if you lower and raise the top consecutively (usually more than six or seven times depending upon the ambient temperature). Wait at least five minutes before operating the power top again.

NOTE:
If lockout occurs due to hydraulic pump overheating, the system will allow you to raise the top without waiting five minutes. However, do so only if necessary.

Emergency Bypass Mode (To Raise The Top Only)

This procedure is only to be used to raise the top when the top cannot be returned to the UP (raised) position by pressing the POWER TOP switch or is in a position in which the vehicle cannot be driven. Please follow these emergency bypass instructions to return the top to the UP (raised) position.

Press the POWER TOP switch in the Top Up direction five times within two seconds and hold the switch in the Top Up position for a minimum of two minutes.

CAUTION!

- **Once this procedure has been completed and the top is in the UP (raised) position, see your authorized dealer. DO NOT exceed 40 mph (64 km/h).**

(Continued)

CAUTION! (Continued)

- **Using the Emergency Bypass Mode could potentially damage the convertible top and should only be used to raise the power top to the UP (raised) position when the normal top operation is not functioning.**

If damage starts to occur while in the Emergency Bypass Mode, immediately release the power top switch and see your authorized dealer.

NOTE: This procedure may take more time to fully raise and close the power top. It is not uncommon to see delays of up to 30 seconds before operation begins.

MIRRORS

Inside Day/Night Mirror

A two-point pivot system allows for horizontal and vertical mirror adjustment. Adjust the mirror to center on the view through the rear window.

Headlight glare can be reduced by moving the small control under the mirror to the night position (toward the rear of the vehicle). The mirror should be adjusted while set in the day position (toward the windshield).

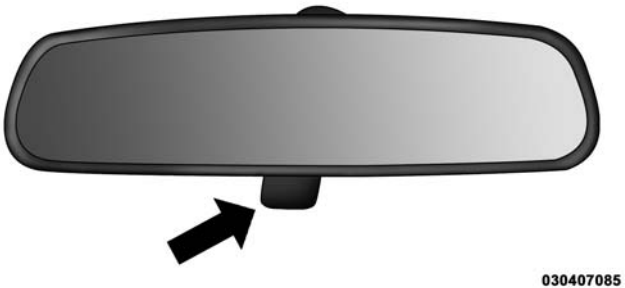

Adjusting Rearview Mirror

Automatic Dimming Mirror — If Equipped

This mirror automatically adjusts for headlight glare from vehicles behind you. You can turn the feature on or off by pressing the button at the base of the mirror. A light to the left of the button will illuminate to indicate when the dimming feature is activated. The sensor to the right of the button does not illuminate.

NOTE: This feature is disabled when the vehicle is moving in reverse.

030433056

Automatic Dimming Mirror

CAUTION!

To avoid damage to the mirror during cleaning, never spray any cleaning solution directly onto the mirror. Apply the solution onto a clean cloth and wipe the mirror clean.

Power Mirrors

The power mirror control is located on the driver's door trim.

Power Mirror Control

To adjust a mirror, turn the control toward the left or right mirror positions indicated. Tilt the control in the direction you want the mirror to move.

When finished, return the knob to the center "O" (Off) position to guard against accidentally moving a mirror position.

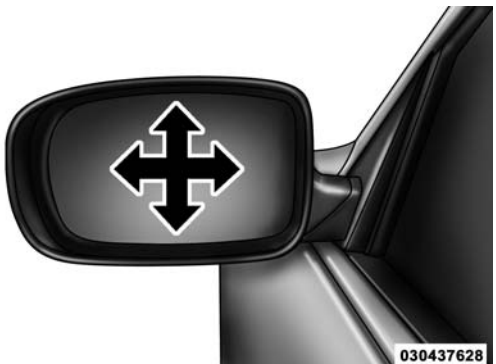

Mirror Directions

Adjusting Side View Mirrors

Outside Mirror — Driver Side

Adjust the outside mirror to center on the adjacent lane of traffic, with a slight overlap of the view obtained on the inside mirror.

Outside Mirror — Passenger Side

Adjust the convex outside mirror so you can just see the side of your vehicle in the part of the mirror closest to the vehicle.

WARNING!

Vehicles and other objects seen in the passenger side convex mirror will look smaller and farther away than they really are. Relying too much on your passenger side convex mirror could cause you to

(Continued)

WARNING! (Continued)

collide with another vehicle or other object. Use your inside mirror when judging the size or distance of a vehicle seen in the passenger side convex mirror. Some vehicles will not have a convex passenger side mirror.

Exterior Mirrors Folding Feature

All exterior mirrors are hinged and may be moved either forward or rearward to resist damage. The hinges have three detent positions: full forward, full rearward and normal.

Heated Mirrors — If Equipped

These mirrors are heated to melt frost or ice. This feature is activated whenever you turn on the rear

window defroster. Refer to “Rear Window Features” in “Understanding The Features Of Your Vehicle” for further information.

Vanity Mirror — If Equipped

A vanity mirror is attached to the inside face of the sun visor. To use the mirror, rotate the sun visor downward and flip the mirror cover upward.

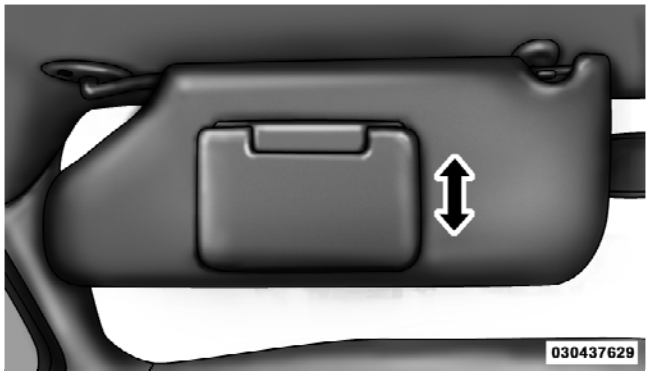

Uconnect™ Phone — IF EQUIPPED

Uconnect™ Phone is a voice-activated, hands-free, in-vehicle communications system. Uconnect™ Phone allows you to dial a phone number with your mobile phone using simple voice commands (e.g., “Call” ... “Mike” ... “Work” or “Dial” ... “248-555-1212”). Your mobile phone’s audio is transmitted through your vehicle’s audio system; the system will automatically mute your radio when using the Uconnect™ Phone.

NOTE: The Uconnect™ Phone requires a mobile phone equipped with the Bluetooth® “Hands-Free Profile”, Version 0.96 or higher. See the Uconnect™ website for supported phones.

For Uconnect™ customer support, visit the following websites:

- www.chrysler.com/uconnect
- www.dodge.com/uconnect

- www.jeep.com/uconnect
- or call 1–877–855–8400

Uconnect™ Phone allows you to transfer calls between the system and your mobile phone as you enter or exit your vehicle and enables you to mute the system's microphone for private conversation.

The Uconnect™ Phone is driven through your Bluetooth® "Hands-Free Profile" mobile phone. Uconnect™ features Bluetooth® technology - the global standard that enables different electronic devices to connect to each other without wires or a docking station, so Uconnect™ Phone works no matter where you stow your mobile phone (be it your purse, pocket, or briefcase), as long as your phone is turned on and has been paired to the vehicle's Uconnect™ Phone. The Uconnect™ Phone allows up to seven mobile phones to be linked to the system. Only one linked (or paired) mobile phone can be used with the system at a time. The system is available in English, Spanish, or French languages.

WARNING!

Any voice commanded system should be used only in safe driving conditions following all applicable laws, including laws regarding phone use. All attention should be kept on the roadway ahead. Failure to do so may result in a collision causing serious injury or death.

Uconnect™ Phone Button

The radio or steering wheel controls (if equipped) will contain the two control buttons (Uconnect™ Phone button and Voice Command VR button) that will enable you to access the system. When you press the button you will hear the word Uconnect™ followed by a BEEP. The beep is your signal to give a command.

Voice Command Button

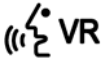

Actual button location may vary with the radio. The individual buttons are described in the "Operation" section.

The Uconnect™ Phone can be used with any Hands-Free Profile certified Bluetooth® mobile phone. See the Uconnect™ website for supported phones. Refer to your mobile service provider or the phone manufacturer for details.

The Uconnect™ Phone is fully integrated with the vehicle's audio system. The volume of the Uconnect™ Phone can be adjusted either from the radio volume control knob or from the steering wheel radio control (right switch), if so equipped.

The radio display will be used for visual prompts from the Uconnect™ Phone such as "CELL" or caller ID on certain radios.

Operation

Voice commands can be used to operate the Uconnect™ Phone and to navigate through the Uconnect™ Phone menu structure. Voice commands are required after most Uconnect™ Phone prompts. You will be prompted for a specific command and then guided through the available options.

- Prior to giving a voice command, one must wait for the beep, which follows the "Ready" prompt or another prompt.
- For certain operations, compound commands can be used. For example, instead of saying "Setup" and then "Pair a Device", the following compound command can be said: "Pair a Bluetooth® Device".
- For each feature explanation in this section, only the compound form of the voice command is given. You can also break the commands into parts and say each

part of the command when you are asked for it. For example, you can use the compound form voice command "Phonebook New Entry", or you can break the compound form command into two voice commands: "Phonebook" and "New Entry". Please remember, the Uconnect™ Phone works best when you talk in a normal conversational tone, as if speaking to someone sitting a few feet/meters away from you.

Voice Command Tree

Refer to "Voice Tree" in this section.

Help Command

If you need assistance at any prompt, or if you want to know your options at any prompt, say "Help" following the beep. The Uconnect™ Phone will play some of the options at any prompt if you ask for help.

To activate the Uconnect™ Phone, simply press the button and follow the audible prompts for directions. Uconnect™ Phone sessions begin with a press of the button on the radio control head.

Cancel Command

At any prompt, after the beep, you can say "Cancel" and you will be returned to the main menu. However, in a few instances the system will take you back to the previous menu.

Pair (Link) Uconnect™ Phone To A Mobile Phone

To begin using your Uconnect™ Phone, you must pair your compatible Bluetooth® enabled mobile phone.

To complete the pairing process, you will need to reference your mobile phone Owner's Manual. The Uconnect™ website may also provide detailed instructions for pairing.

The following are general phone to Uconnect™ Phone pairing instructions:

- Press the button to begin.
- After the "Ready" prompt and the following beep, say "Device Pairing".
- When prompted, after the beep, say "Pair a Device" and follow the audible prompts.
- You will be asked to say a four-digit Personal Identification Number (PIN), which you will later need to enter into your mobile phone. You can enter any four-digit PIN. You will not need to remember this PIN after the initial pairing process.
- For identification purposes, you will be prompted to give the Uconnect™ Phone a name for your mobile phone. Each mobile phone that is paired should be given a unique phone name.
- You will then be asked to give your mobile phone a priority level between one and seven, with one being the highest priority. You can pair up to seven mobile phones to your Uconnect™ Phone. However, at any given time, only one mobile phone can be in use, connected to your Uconnect™ System. The priority allows the Uconnect™ Phone to know which mobile phone to use if multiple mobile phones are in the vehicle at the same time. For example, if priority three and priority five phones are present in the vehicle, the Uconnect™ Phone will use the priority three mobile phone when you make a call. You can select to use a lower priority mobile phone at any time (refer to "Advanced Phone Connectivity" in this section).

Dial By Saying A Number

- Press the button to begin.
- After the "Ready" prompt and the following beep, say "Dial".

- The system will prompt you to say the number you want to call.
- For example, you can say “234-567-8901”.
- The Uconnect™ Phone will confirm the phone number and then dial. The number will appear in the display of certain radios.

Call By Saying A Name

- Press the button to begin.
- After the “Ready” prompt and the following beep, say “Call”.
- The system will prompt you to say the name of the person you want to call.
- After the “Ready” prompt and the following beep, say the name of the person you want to call. For example, you can say “John Doe”, where John Doe is a previously stored name entry in the Uconnect™ phonebook or downloaded phonebook. To learn how to store a name in the phonebook, refer to “Add Names to Your Uconnect™ Phonebook”, in the phonebook.
- The Uconnect™ system will confirm the name and then dial the corresponding phone number, which may appear in the display of certain radios.

Add Names To Your Uconnect™ Phonebook

NOTE: Adding names to the Uconnect™ Phonebook is recommended when the vehicle is not in motion.

- Press the button to begin.
- After the “Ready” prompt and the following beep, say “Phonebook New Entry”.
- When prompted, say the name of the new entry. Use of long names helps the Voice Command and it is recommended. For example, say “Robert Smith” or “Robert” instead of “Bob”.

- When prompted, enter the number designation (e.g., "Home", "Work", "Mobile", or "Other"). This will allow you to store multiple numbers for each phonebook entry, if desired.
- When prompted, recite the phone number for the phonebook entry that you are adding.

After you are finished adding an entry into the phonebook, you will be given the opportunity to add more phone numbers to the current entry or to return to the main menu.

The Uconnect™ Phone will allow you to enter up to 32 names in the phonebook with each name having up to four associated phone numbers and designations. Each language has a separate 32-name phonebook accessible only in that language. In addition, if equipped and supported by your phone, Uconnect™ Phone automatically downloads your mobile phone's phonebook.

Phonebook Download – Automatic Phonebook Transfer From Mobile Phone

If equipped and specifically supported by your phone, Uconnect™ Phone automatically downloads names (text names) and number entries from your mobile phone's phonebook. Specific Bluetooth® Phones with Phone Book Access Profile may support this feature. See Uconnect™ website for supported phones.

- To call a name from the Uconnect™ Phonebook or downloaded Phonebook, follow the procedure in "Call by Saying a Name" section.
- Automatic download and update, if supported, begins as soon as the Bluetooth® wireless phone connection is made to the Uconnect™ Phone, for example, after you start the vehicle.

- A maximum of 1000 entries per phone will be downloaded and updated every time a phone is connected to the Uconnect™ Phone.
- Depending on the maximum number of entries downloaded, there may be a short delay before the latest downloaded names can be used. Until then, if available, the previously downloaded phonebook is available for use.
- Only the phonebook of the currently connected mobile phone is accessible.
- Only the mobile phone's phonebook is downloaded. SIM card phonebook is not part of the Mobile phonebook.
- This downloaded phonebook cannot be edited or deleted on the Uconnect™ Phone. These can only be edited on the mobile phone. The changes are transferred and updated to Uconnect™ Phone on the next phone connection.

Edit Uconnect™ Phonebook Entries

NOTE:

- Editing names in the phonebook is recommended when the vehicle is not in motion.
- Automatic downloaded phonebook entries cannot be deleted or edited.
- Press the button to begin.
- After the "Ready" prompt and the following beep, say "Phonebook Edit Entry".
- You will then be asked for the name of the phonebook entry that you wish to edit.

- Next, choose the number designation (home, work, mobile, or other) that you wish to edit.
- When prompted, recite the new phone number for the phonebook entry that you are editing.

After you are finished editing an entry in the phonebook, you will be given the opportunity to edit another entry in the phonebook, call the number you just edited, or return to the main menu.

"Phonebook Edit Entry" can be used to add another phone number to a name entry that already exists in the phonebook. For example, the entry John Doe may have a mobile and a home number, but you can add "John Doe's" work number later using the "Phonebook Edit Entry" feature.

Delete Uconnect™ Phonebook Entry

NOTE: Editing phonebook entries is recommended when the vehicle is not in motion.

- Press the button to begin.
- After the "Ready" prompt and the following beep, say "Phonebook Delete".
- After you enter the Phonebook Delete menu, you will then be asked for the name of the entry that you wish to delete. You can either say the name of a phonebook entry that you wish to delete or you can say "List Names" to hear a list of the entries in the phonebook from which you choose. To select one of the entries from the list, press the VR button while the Uconnect™ Phone is playing the desired entry and say "Delete".
- After you enter the name, the Uconnect™ Phone will ask you which designation you wish to delete: home, work, mobile, other, or all. Say the designation you wish to delete.

- Note that only the phonebook entry in the current language is deleted.
- Automatic downloaded phonebook entries cannot be deleted or edited.

Delete/Erase "All" Uconnect™ Phonebook Entries

- Press the button to begin.
- After the "Ready" prompt and the following beep, say "Phonebook Erase All".
- The Uconnect™ Phone will ask you to verify that you wish to delete all the entries from the phonebook.
- After confirmation, the phonebook entries will be deleted.
- Note that only the phonebook in the current language is deleted.
- Automatic downloaded phonebook entries cannot be deleted or edited.

List All Names In The Uconnect™ Phonebook

- Press the button to begin.
- After the "Ready" prompt and the following beep, say "Phonebook List Names".
- The Uconnect™ Phone will play the names of all the phonebook entries, including the downloaded phonebook entries, if available.
- To call one of the names in the list, press the VR button during the playing of the desired name, and say "Call".

NOTE: The user can also exercise "Edit" or "Delete" operations at this point.

- The Uconnect™ Phone will then prompt you as to the number designation you wish to call.
- The selected number will be dialed.

Phone Call Features

The following features can be accessed through the Uconnect™ Phone if the feature(s) are available on your mobile service plan. For example, if your mobile service plan provides three-way calling, this feature can be accessed through the Uconnect™ Phone. Check with your mobile service provider for the features that you have.

Answer Or Reject An Incoming Call — No Call Currently In Progress

When you receive a call on your mobile phone, the Uconnect™ Phone will interrupt the vehicle audio system, if on, and will ask if you would like to answer the call. Press the button to accept the call. To reject the call, press and hold the button until you hear a single beep, indicating that the incoming call was rejected.

Answer Or Reject An Incoming Call — Call Currently In Progress

If a call is currently in progress and you have another incoming call, you will hear the same network tones for call waiting that you normally hear when using your mobile phone. Press the button to place the current call on hold and answer the incoming call.

NOTE: The Uconnect™ Phone compatible phones in the market today do not support rejecting an incoming call when another call is in progress. Therefore, the user can only answer an incoming call or ignore it.

Making A Second Call While Current Call Is In Progress

To make a second call while you are currently on a call, press the VR button and say “Dial” or “Call” followed by the phone number or phonebook entry you wish to call. The first call will be on hold while the second call is

in progress. To go back to the first call, refer to "Toggling Between Calls" in this section. To combine two calls, refer to "Conference Call" in this section.

Place/Retrieve A Call From Hold

To put a call on hold, press the button until you hear a single beep. This indicates that the call is on hold. To bring the call back from hold, press and hold the button until you hear a single beep.

Toggling Between Calls

If two calls are in progress (one active and one on hold), press the button until you hear a single beep, indicating that the active and hold status of the two calls have switched. Only one call can be placed on hold at a time.

Conference Call

When two calls are in progress (one active and one on hold), press and hold the button until you hear a double beep indicating that the two calls have been joined into one conference call.

Three-Way Calling

To initiate three-way calling, press the VR button while a call is in progress, and make a second phone call, as described under "Making a Second Call While Current Call is in Progress". After the second call has established, press and hold the button until you hear a double beep, indicating that the two calls have been joined into one conference call.

Call Termination

To end a call in progress, momentarily press the button. Only the active call(s) will be terminated and if there is a call on hold, it will become the new active call. If the

active call is terminated by the phone far end, a call on hold may not become active automatically. This is cell phone-dependent. To bring the call back from hold, press and hold the button until you hear a single beep.

Redial

- Press the button to begin.
- After the "Ready" prompt and the following beep, say "Redial".
- The Uconnect™ Phone will call the last number that was dialed from your mobile phone.

NOTE: This may not be the last number dialed from the Uconnect™ Phone.

Call Continuation

Call continuation is the progression of a phone call on the Uconnect™ Phone after the vehicle ignition key has been switched to OFF. Call continuation functionality available on the vehicle can be any one of three types:

- After the ignition key is switched to OFF, a call can continue on the Uconnect™ Phone either until the call ends, or until the vehicle battery condition dictates cessation of the call on the Uconnect™ Phone and transfer of the call to the mobile phone.
- After the ignition key is switched to OFF, a call can continue on the Uconnect™ Phone for a certain duration, after which the call is automatically transferred from the Uconnect™ Phone to the mobile phone.
- An active call is automatically transferred to the mobile phone after the ignition key is switched to OFF.

Uconnect™ Phone Features

Language Selection

To change the language that the Uconnect™ Phone is using:

- Press the button to begin.
- After the "Ready" prompt and the following beep, say the name of the language you wish to switch to English, Espanol, or Francais.
- Continue to follow the system prompts to complete the language selection.

After selecting one of the languages, all prompts and voice commands will be in that language.

NOTE: After every Uconnect™ Phone language change operation, only the language-specific 32-name phonebook is usable. The paired phone name is not language-specific and is usable across all languages.

Emergency Assistance

If you are in an emergency and the mobile phone is reachable:

- Pick up the phone and manually dial the emergency number for your area.

If the phone is not reachable and the Uconnect™ Phone is operational, you may reach the emergency number as follows:

- Press the button to begin.
- After the "Ready" prompt and the following beep, say "Emergency" and the Uconnect™ Phone will instruct the paired mobile phone to call the emergency number. This feature is supported in the U.S., Canada, and Mexico.

NOTE:

- The emergency number dialed is based on the country where the vehicle is purchased (911 for the U.S. and Canada and 060 for Mexico). The number dialed may not be applicable with the available mobile service and area.
- If supported, this number may be programmable on some systems. To do this, press the button and say "Setup", followed by "Emergency".
- The Uconnect™ Phone does slightly lower your chances of successfully making a phone call as to that for the mobile phone directly.

WARNING!

To use your Uconnect™ Phone System in an emergency, your mobile phone must be:
- **turned on,**
- **paired to the Uconnect™ System,**
- **and have network coverage.**

Towing Assistance

If you need towing assistance:

- Press the button to begin.
- After the "Ready" prompt and the following beep, say "Towing Assistance".

NOTE:

- The towing assistance number dialed is based on the country where the vehicle is purchased (1-800-528-2069 for the U.S., 1-877-213-4525 for Canada, 55-14-3454 for Mexico City and 1-800-712-3040 for outside Mexico City in Mexico). Please refer to the 24-Hour "Towing Assistance" coverage details on the DVD in the Warranty Information Booklet and the 24-Hour Towing Assistance references.
- If supported, this number may be programmable on some systems. To do this, press the button and say "Setup", followed by "Towing Assistance".

Paging

To learn how to page, refer to "Working with Automated Systems". Paging works properly except for pagers of certain companies, which time out a little too soon to work properly with the Uconnect™ Phone.

Voice Mail Calling

To learn how to access your voice mail, refer to "Working with Automated Systems".

Working With Automated Systems

This method is used in instances where one generally has to press numbers on the mobile phone keypad while navigating through an automated telephone system.

You can use your Uconnect™ Phone to access a voice mail system or an automated service, such as a paging service or automated customer service line. Some services require immediate response selection. In some instances, that may be too quick for use of the Uconnect™ Phone.

When calling a number with your Uconnect™ Phone that normally requires you to enter in a touch-tone sequence on your mobile phone keypad, you can press the VR button and say the sequence you wish to enter,

followed by the word “Send”. For example, if required to enter your PIN followed with a pound, (3 7 4 6 #), you can press the VR button and say, “3 7 4 6 # Send”. Saying a number, or sequence of numbers, followed by “Send”, is also to be used for navigating through an automated customer service center menu structure, and to leave a number on a pager.

You can also send stored Uconnect™ phonebook entries as tones for fast and easy access to voice mail and pager entries. To use this feature, dial the number you wish to call and then press the VR button and say, “Send.” The system will prompt you to enter the name or number and say the name of the phonebook entry you wish to send. The Uconnect™ Phone will then send the corresponding phone number associated with the phonebook entry, as tones over the phone.

NOTE:

- You may not hear all of the tones due to mobile phone network configurations. This is normal.
- Some paging and voice mail systems have system time out settings that are too short and may not allow the use of this feature.

Barge In — Overriding Prompts

The “Voice Command” button can be used when you wish to skip part of a prompt and issue your voice command immediately. For example, if a prompt is asking “Would you like to pair a phone, clear a...,” you could press the VR button and say, “Pair a Phone” to select that option without having to listen to the rest of the voice prompt.

Turning Confirmation Prompts ON/OFF

Turning confirmation prompts off will stop the system from confirming your choices (e.g., the Uconnect™ Phone will not repeat a phone number before you dial it).

- Press the button to begin.
- After the "Ready" prompt and the following beep, say one of the following:
  - "Setup Confirmation Prompts On"
  - "Setup Confirmation Prompts Off"

Phone And Network Status Indicators

If available on the radio and/or on a premium display such as the instrument panel cluster, and supported by your mobile phone, the Uconnect™ Phone will provide notification to inform you of your phone and network status when you are attempting to make a phone call using Uconnect™ Phone. The status is given for network signal strength, phone battery strength, etc.

Dialing Using The Mobile Phone Keypad

You can dial a phone number with your mobile phone keypad and still use the Uconnect™ Phone (while dialing via the mobile phone keypad, the user must exercise caution and take precautionary safety measures). By dialing a number with your paired Bluetooth® mobile phone, the audio will be played through your vehicle's audio system. The Uconnect™ Phone will work the same as if you dial the number using Voice Command.

NOTE: Certain brands of mobile phones do not send the dial ring to the Uconnect™ Phone to play it on the vehicle audio system, so you will not hear it. Under this situation, after successfully dialing a number the user may feel that the call did not go through even though the call is in progress. Once your call is answered, you will hear the audio.

Mute/Un-Mute (Mute ON/OFF)

When you mute the Uconnect™ Phone, you will still be able to hear the conversation coming from the other party, but the other party will not be able to hear you. In order to mute the Uconnect™ Phone:

- Press the VR button.
- Following the beep, say "Mute".

In order to un-mute the Uconnect™ Phone:

- Press the VR button.
- Following the beep, say "Mute off".

Advanced Phone Connectivity

Transfer Call To And From Mobile Phone

The Uconnect™ Phone allows ongoing calls to be transferred from your mobile phone to the Uconnect™ Phone without terminating the call. To transfer an ongoing call from your Uconnect™ Phone paired mobile phone to the Uconnect™ Phone or vice versa, press the VR button and say "Transfer Call".

Connect Or Disconnect Link Between The Uconnect™ Phone And Mobile Phone

Your mobile phone can be paired with many different electronic devices, but can only be actively "connected" with one electronic device at a time.

If you would like to connect or disconnect the Bluetooth® connection between your mobile phone and the Uconnect™ Phone System, follow the instructions described in your mobile phone User's Manual.

List Paired Mobile Phone Names

- Press the button to begin.
- After the "Ready" prompt and the following beep, say "Setup Phone Pairing".

- When prompted, say “List Phones”.
- The Uconnect™ Phone will play the phone names of all paired mobile phones in order from the highest to the lowest priority. To “Select” or “Delete” a paired phone being announced, press the VR button and say “Select” or “Delete”. Also, see the next two sections for an alternate way to “Select” or “Delete” a paired phone.

Select Another Mobile Phone

This feature allows you to select and start using another phone paired with the Uconnect™ Phone.

- Press the button to begin.
- After the “Ready” prompt and the following beep, say “Setup Select Phone” and follow the prompts.
- You can also press the button at any time while the list is being played, and then choose the phone that you wish to select.
- The selected phone will be used for the next phone call. If the selected phone is not available, the Uconnect™ Phone will return to using the highest priority phone present in or near (approximately within 30 ft (9 m)) the vehicle.

Delete Uconnect™ Phone Paired Mobile Phones

- Press the button to begin.
- After the “Ready” prompt and the following beep, say “Setup Phone Pairing”.
- At the next prompt, say “Delete” and follow the prompts.

- You can also press the button at any time while the list is being played, and then choose the phone you wish to delete.

Things You Should Know About Your Uconnect™ Phone

Uconnect™ Phone Tutorial

To hear a brief tutorial of the system features, press the button and say "Uconnect™ Tutorial."

Voice Training

For users experiencing difficulty with the system recognizing their voice commands or numbers, the Uconnect™ Phone Voice Training feature may be used. To enter this training mode, follow one of the two following procedures:

From outside the Uconnect™ Phone mode (e.g., from radio mode):

- Press and hold the VR button for five seconds until the session begins, or,
- Press the VR button and say the "Voice Training", "System Training", or "Start Voice Training" command.

You can either press the Uconnect™ Phone button to restore the factory setting or repeat the words and phrases when prompted by the Uconnect™ Phone. For best results, the Voice Training session should be completed when the vehicle is parked with the engine running, all windows closed, and the blower fan switched off.

This procedure may be repeated with a new user. The system will adapt to the last trained voice only.

Reset

- press the button.
- After the “Ready” prompt, and the following beep, say “Setup”, then “Reset”.

This will delete all phone pairing, phone book entries, and other settings in all language modes. The System will prompt you before resetting to factory settings.

Voice Command

- For best performance, adjust the rearview mirror to provide at least ½ in (1 cm) gap between the overhead console (if equipped) and the mirror.
- Always wait for the beep before speaking.
- Speak normally, without pausing, just as you would speak to a person sitting a few feet/meters away from you.
- Make sure that no one other than you is speaking during a Voice Command period.
- Performance is maximized under:
  - low-to-medium blower setting,
  - low-to-medium vehicle speed,
  - low road noise,
  - smooth road surface,
  - fully closed windows,
  - dry weather condition.
- Even though the system is designed for users speaking in North American English, French, and Spanish accents, the system may not always work for some.
- When navigating through an automated system such as voice mail, or when sending a page, at the end of speaking the digit string, make sure to say “Send”.

- Storing names in the phonebook when the vehicle is not in motion is recommended.
- It is not recommended to store similar sounding names in the Uconnect™ Phonebook.
- Phonebook (Downloaded and Uconnect™ Phone Local) name recognition rate is optimized when the entries are not similar.
- Numbers must be spoken in single digits. “800” must be spoken “eight-zero-zero” not “eight hundred”.
- You can say “O” (letter “O”) for “0” (zero).
- Even though international dialing for most number combinations is supported, some shortcut dialing number combinations may not be supported.
- In a convertible vehicle, system performance may be compromised with the convertible top down.

Far End Audio Performance

- Audio quality is maximized under:
  - low-to-medium blower setting,
  - low-to-medium vehicle speed,
  - low road noise,
  - smooth road surface,
  - fully closed windows,
  - dry weather conditions, and
  - operation from the driver’s seat.
- Performance, such as audio clarity, echo, and loudness to a large degree rely on the phone and network, and not the Uconnect™ Phone.
- Echo at the phone far end can sometimes be reduced by lowering the in-vehicle audio volume.
- In a convertible vehicle, system performance may be compromised with the convertible top down.

Recent Calls

If your phone supports "Automatic Phonebook Download", Uconnect™ Phone can list your Outgoing, Incoming and Missed Calls.

SMS

Uconnect™ Phone can read or send new messages on your phone.

Read Messages:

If you receive a new text message while your phone is connected to Uconnect™ Phone, an announcement will be made to notify you that you have a new text message. If you wish to hear the new message:

- Press the button.
- After the "Ready" prompt and the following beep, say "SMS Read" or "Read Messages."
- Uconnect™ Phone will play the new text message for you.

After reading a message, you can "Reply" or "Forward" the message using Uconnect™ Phone.

Send Messages:

You can send messages using Uconnect™ Phone. To send a new message:

- Press the button.
- After the "Ready" prompt and the following beep, say "SMS Send" or "Send Message."
- You can either say the message you wish to send or say "List Messages." There are 20 preset messages.

To send a message, press the VR button while the system is listing the message and say "Send."

Uconnect™ Phone will prompt you to say the name or number of the person you wish to send the message to.

List of Preset Messages:

1. Yes
2. No
3. Where are you?
4. I need more direction.
5. L O L
6. Why
7. I love you
8. Call me
9. Call me later
10. Thanks
11. See You in 15 minutes
12. I am on my way
13. I'll be late
14. Are you there yet?
15. Where are we meeting?
16. Can this wait?
17. Bye for now
18. When can we meet?
19. Send number to call
20. Start without me

Turn SMS Incoming Announcement ON/OFF

Turning the SMS Incoming Announcement OFF will stop the system from announcing the new incoming messages.

- Press the button.
- After the "Ready" prompt and the following beep, say "Setup, SMS Incoming Message Announcement," you will then be given a choice to change it.

Bluetooth® Communication Link

Mobile phones have been found to lose connection to the Uconnect™ Phone. When this happens, the connection can generally be reestablished by switching the phone off/on. Your mobile phone is recommended to remain in Bluetooth® ON mode.

Power-Up

After switching the ignition key from OFF to either the ON or ACC position, or after a language change, you must wait at least fifteen seconds prior to using the system.

Voice Tree

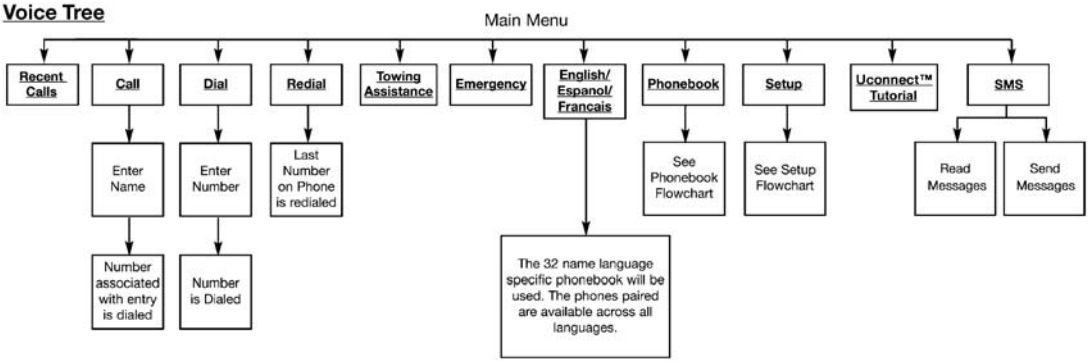

Note: **Available Voice commands are shown in bold face and are underlined.**

030607515

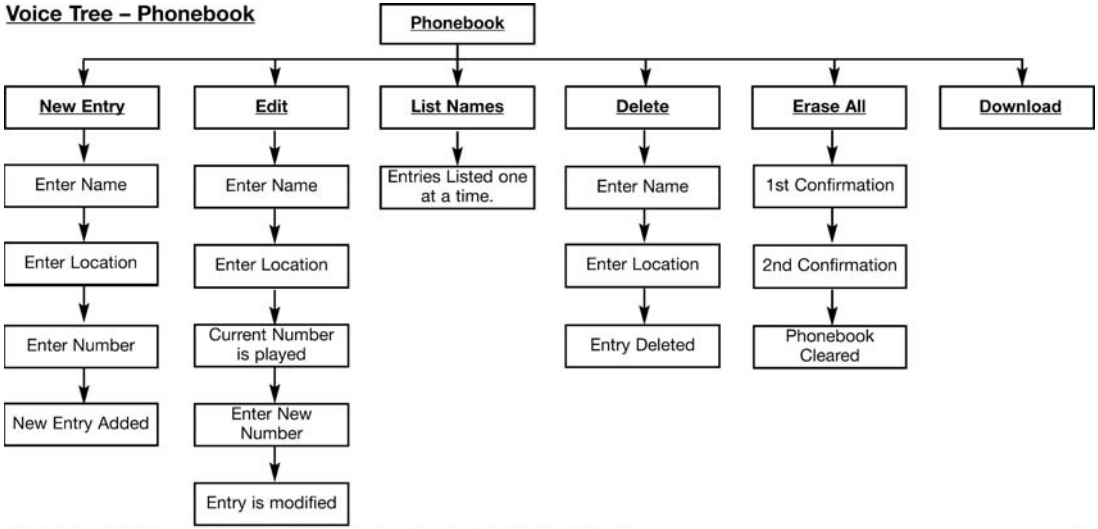

Note: Available Voice commands are shown in bold face and are underlined.

81c6bf80

Voice Tree – Setup

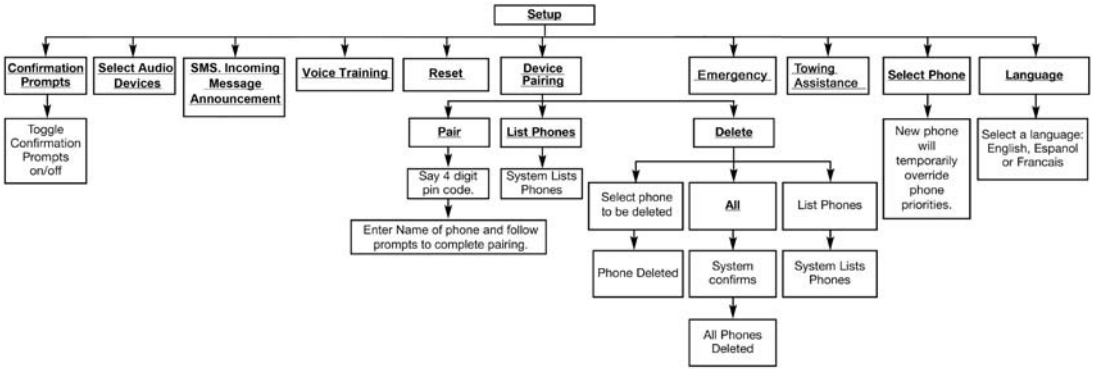

Note: Available Voice commands are shown in bold face and are underlined. 030605540

Voice Commands	
Primary	Alternate (s)
zero	
one	
two	
three	
four	
five	
six	
seven	
eight	
nine	
star (*)	
plus (+)	
pound (#)	
add location	

Voice Commands	
Primary	Alternate (s)
all	
call	
cancel	
confirmation prompts	
continue	
delete	
dial	
download	
edit	
emergency	
English	
erase all	
Espanol	
Francais	

Voice Commands	
Primary	Alternate (s)
help	
home	
language	
list names	
list phones	
mobile	
mute	
mute off	
new entry	
no	
other	
pair a phone	
phone pairing	pairing
phonebook	phone book

Voice Commands	
Primary	Alternate (s)
previous	
record again	
redial	
return to main menu	return or main menu
select phone	select
send	
set up	phone settings or phone set up
towing assistance	
transfer call	
Uconnect™ Tutorial	
try again	
voice training	
work	
yes	

General Information

This device complies with Part 15 of the FCC rules and RSS 210 of Industry Canada. Operation is subject to the following conditions:

- Changes or modifications not expressly approved by the party responsible for compliance could void the user's authority to operate the equipment.
- This device may not cause harmful interference.
- This device must accept any interference received, including interference that may cause undesired operation.

VOICE COMMAND — IF EQUIPPED

Voice Command System Operation

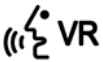

This Voice Command system allows you to control your AM, FM radio, satellite radio, disc player, and a memo recorder.

NOTE: Take care to speak into the Voice Interface System as calmly and normally as possible. The ability of the Voice Interface System to recognize user voice commands may be negatively affected by rapid speaking or a raised voice level.

WARNING!

Any voice commanded system should be used only in safe driving conditions following all applicable

(Continued)

WARNING! (Continued)

laws. All attention should be kept on the roadway ahead. Failure to do so may result in a collision causing serious injury or death.

When you press the Voice Command VR button, you will hear a beep. The beep is your signal to give a command.

NOTE: If you do not say a command within a few seconds, the system will present you with a list of options.

If you ever wish to interrupt the system while it lists options, press the Voice Command VR button, listen for the beep, and say your command.

Pressing the Voice Command VR button while the system is speaking is known as "barging in." The system will be interrupted, and after the beep, you can add or change commands. This will become helpful once you start to learn the options.

NOTE: At any time, you can say the words "Cancel", "Help" or "Main Menu".

These commands are universal and can be used from any menu. All other commands can be used depending upon the active application.

When using this system, you should speak clearly and at a normal speaking volume.

The system will best recognize your speech if the windows are closed, and the heater/air conditioning fan is set to low.

At any point, if the system does not recognize one of your commands, you will be prompted to repeat it.

To hear the first available Menu, press the Voice Command VR button and say "Help" or "Main Menu".

Commands

The Voice Command system understands two types of commands. Universal commands are available at all times. Local commands are available if the supported radio mode is active.

Changing the Volume

1. Start a dialogue by pressing the Voice Command VR button.
2. Say a command (e.g., “Help”).
3. Use the ON/OFF VOLUME rotary knob to adjust the volume to a comfortable level while the Voice Command system is speaking. Please note the volume setting for Voice Command is different than the audio system.

Main Menu

Start a dialogue by pressing the Voice Command VR button. You may say “Main Menu” to switch to the main menu.

In this mode, you can say the following commands:

- “Radio” (to switch to the radio mode)
- “Disc” (to switch to the disc mode)
- “Memo” (to switch to the memo recorder)
- “Setup” (to switch to system setup)

Radio AM

To switch to the AM band, say “AM” or “Radio AM”. In this mode, you may say the following commands:

- “Frequency #” (to change the frequency)
- “Next Station” (to select the next station)
- “Previous Station” (to select the previous station)

- "Radio Menu" (to switch to the radio menu)
- "Main Menu" (to switch to the main menu)

Radio FM

To switch to the FM band, say "FM" or "Radio FM". In this mode, you may say the following commands:

- "Frequency #" (to change the frequency)
- "Next Station" (to select the next station)
- "Previous Station" (to select the previous station)
- "Menu Radio" (to switch to the radio menu)
- "Main Menu" (to switch to the main menu)

Satellite Radio

To switch to satellite radio mode, say "Sat" or "Satellite Radio". In this mode, you may say the following commands:

- "Channel Number" (to change the channel by its spoken number)
- "Next Channel" (to select the next channel)
- "Previous Channel" (to select the previous channel)
- "List Channel" (to hear a list of available channels)
- "Select Name" (to say the name of a channel)
- "Menu Radio" (to switch to the radio menu)
- "Main Menu" (to switch to the main menu)

Disc

To switch to the disc mode, say "Disc". In this mode, you may say the following commands:

- "Track" (#) (to change the track)
- "Next Track" (to play the next track)
- "Previous Track" (to play the previous track)
- "Main Menu" (to switch to the main menu)

Memo

To switch to the voice recorder mode, say “Memo”. In this mode, you may say the following commands:

- “New Memo” (to record a new memo) — During the recording, you may press the Voice Command VR button to stop recording. You proceed by saying one of the following commands:
  - “Save” (to save the memo)
  - “Continue” (to continue recording)
  - “Delete” (to delete the recording)
- “Play Memos” (to play previously recorded memos) — During the playback you may press the Voice Command VR button to stop playing memos. You proceed by saying one of the following commands:
  - “Repeat” (to repeat a memo)
  - “Next” (to play the next memo)
  - “Previous” (to play the previous memo)
  - “Delete” (to delete a memo)
- “Delete All” (to delete all memos)

Setup

To switch to system setup, you may say one of the following:

- “Change to setup”
- “Switch to system setup”
- “Change to setup”
- “Main menu setup” or
- “Switch to setup”

In this mode, you may say the following commands:

- “Language English”
- “Language French”
- “Language Spanish”

- "Tutorial"
- "Voice Training"

NOTE: Keep in mind that you have to press the Voice Command button first and wait for the beep before speaking the "Barge In" commands.

Voice Training

For users experiencing difficulty with the system recognizing their voice commands or numbers the Uconnect™ Voice "Voice Training" feature may be used.

1. Press the Voice Command button, say "System Setup" and once you are in that menu then say "Voice Training." This will train your own voice to the system and will improve recognition.
2. Repeat the words and phrases when prompted by Uconnect™ Voice. For best results, the "Voice Training" session should be completed when the vehicle is parked, engine running, all windows closed, and the blower fan switched off. This procedure may be repeated with a new user. The system will adapt to the last trained voice only.

SEATS

Seats are a part of the Occupant Restraint System of the vehicle.

WARNING!

- **It is dangerous to ride in a cargo area, inside or outside of a vehicle. In a collision, people riding in these areas are more likely to be seriously injured or killed.**

(Continued)

WARNING! (Continued)

- **Do not allow people to ride in any area of your vehicle that is not equipped with seats and seat belts. In a collision, people riding in these areas are more likely to be seriously injured or killed.**
- **Be sure everyone in your vehicle is in a seat and using a seat belt properly.**

Power Seats

The power seat switch is on the outboard side of the seat near the floor. Use the switch to move the seat up, down, forward, rearward, or to tilt the seat.

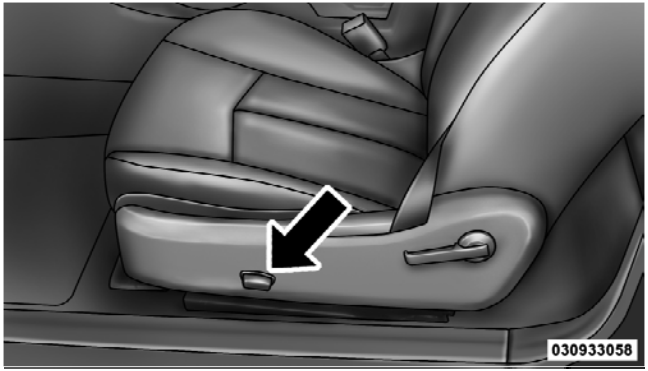

Power Seat Switch

WARNING!

- **Adjusting a seat while driving may be dangerous. Moving a seat while driving could result in loss of control which could cause a collision and serious injury or death.**
- **Seats should be adjusted before fastening the seat belts and while the vehicle is parked. Serious injury or death could result from a poorly adjusted seat belt.**
- **Do not ride with the seatback reclined so that the shoulder belt is no longer resting against your chest. In a collision you could slide under the seat belt, which could result in serious injury or death.**

CAUTION!

Do not place any article under any seat as it may cause damage to the seat controls.

Adjusting The Seat Forward Or Rearward

The seat can be adjusted both forward and rearward. Push the seat switch forward or rearward, the seat will move in the direction of the switch. Release the switch when the desired position has been reached.

Adjusting The Seat Up Or Down

The height of the seats can be adjusted up or down. Pull upward or push downward on the seat switch, the seat will move in the direction of the switch. Release the switch when the desired position is reached.

Tilting The Seat Up Or Down

The angle of the seat cushion can be adjusted in four directions. Pull upward or push downward on the front or rear of the seat switch, the front or rear of the seat cushion will move in the direction of the switch. Release the switch when the desired position has been reached.

Heated Seats — If Equipped

On some models, the front driver and passenger seats may be equipped with heaters in both the seat cushions and seatbacks. The controls for the front heated seats are located on the center instrument panel area.

You can choose from HIGH, LOW or OFF heat settings. Amber indicator lights in each switch indicate the level of heat in use. Two indicator lights will illuminate for HIGH, one for LOW and none for OFF.

Press the switch once to select HIGH-level heating. Press the switch a second time to select LOW-level heating. Press the switch a third time to shut the heating elements OFF.

If HIGH-level heating is selected, the system automatically switches to LOW-level heating and turns one indicator light OFF after a maximum of 60 minutes of continuous operation. It will turn the heater and the remaining indicator light OFF after a maximum of 45 minutes of continuous operation. If LOW-level heating is selected, the system automatically turns the heater and the indicator light OFF after a maximum of 45 minutes of continuous operation.

NOTE: Once a heat setting is selected, heat will be felt within two to five minutes.

WARNING!

- **Persons who are unable to feel pain to the skin because of advanced age, chronic illness, diabetes, spinal cord injury, medication, alcohol use, exhaustion or other physical condition must exercise care when using the seat heater. It may cause burns even at low temperatures, especially if used for long periods of time.**

(Continued)

WARNING! (Continued)

- **Do not place anything on the seat or seatback that insulates against heat, such as a blanket or cushion. This may cause the seat heater to overheat. Sitting in a seat that has been overheated could cause serious burns due to the increased surface temperature of the seat.**

Recliner Adjustment

The recliner control is on the outboard side of the seat. To recline the seat, lean forward slightly and lift the lever. Then lean back to the position desired and release the lever. To return the seatback to its normal upright position, lean forward and lift the lever. Release the lever once the seatback is in the upright position.

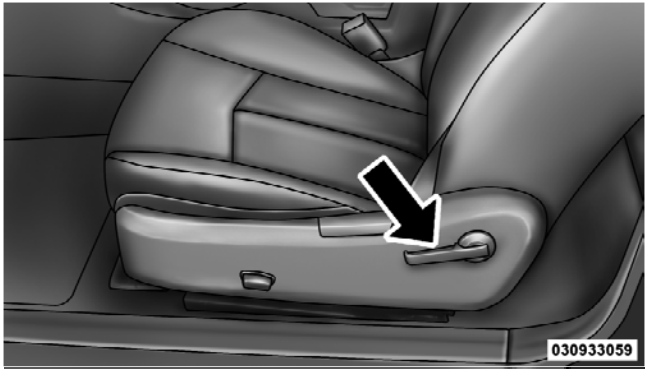

Recliner Lever

WARNING!

- **Adjusting a seat while the vehicle is moving is dangerous. The sudden movement of the seat could cause you to lose control. The seat belt might not be properly adjusted and you could be injured. Adjust the seat only while the vehicle is parked.**
- **Do not ride with the seatback reclined so that the shoulder belt is no longer resting against your chest. In a collision you could slide under the seat belt and be seriously or even fatally injured. Use the recliner only when the vehicle is parked.**

Lumbar Support — If Equipped

This feature allows you to increase or decrease the amount of lumbar support. The lumbar support lever is on the inboard side of the seat. Turn the lever downward to increase and upward to decrease the desired amount of lumbar support.

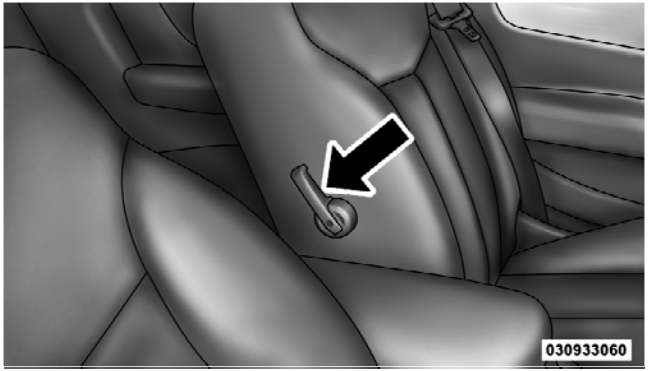

Lumbar Control Lever

Easy Entry System

The Easy Entry lever is located on upper seat belt anchor cover.

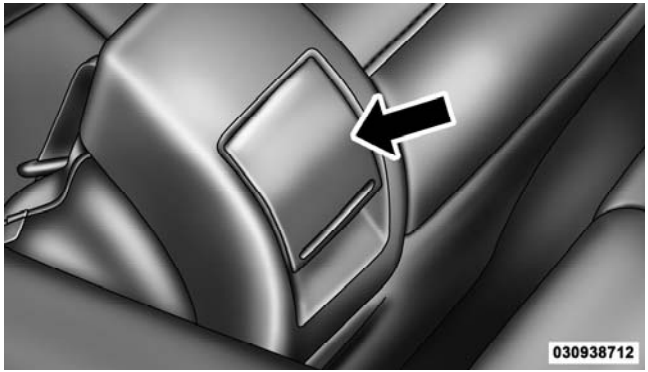

Easy Entry Lever

Pull the lever upward to move the seat and seatback forward.

When returning the seat to its normal position, the memory feature restores the seat position and seatback recline position to their current settings.

On the driver seat, pull the lever upward to move the seatback forward.

When returning the seatback to its normal position the memory feature restores the seatback recline position to its current setting.

Head Restraints

Head restraints are designed to reduce the risk of injury by restricting head movement in the event of a rear impact. Head restraints should be adjusted so that the top of the head restraint is located above the top of your ear.

WARNING!

The head restraints for all occupants must be properly adjusted prior to operating the vehicle or occupying a seat. Head restraints should never be adjusted while the vehicle is in motion. Driving a

(Continued)

WARNING! (Continued)

vehicle with the head restraints improperly adjusted or removed could cause serious injury or death in the event of a collision.

Active Head Restraints — Front Seats

Active Head Restraints are passive, deployable components, and vehicles with this equipment cannot be readily identified by any markings, only through visual inspection of the head restraint. The head restraint will be split in two halves, with the front half being soft foam and trim, the back half being decorative plastic.

When AHRs deploy during a rear impact, the front half of the head restraint extends forward to minimize the gap between the back of the occupant's head and the AHR. This system is designed to help prevent or reduce the extent of injuries to the driver and front passenger in certain types of rear impacts. Refer to "Occupant Restraints" in "Things To Know Before Starting Your Vehicle" for further information.

To raise the head restraint, pull upward on the head restraint. To lower the head restraint, press the push button, located at the base of the head restraint, and push downward on the head restraint.

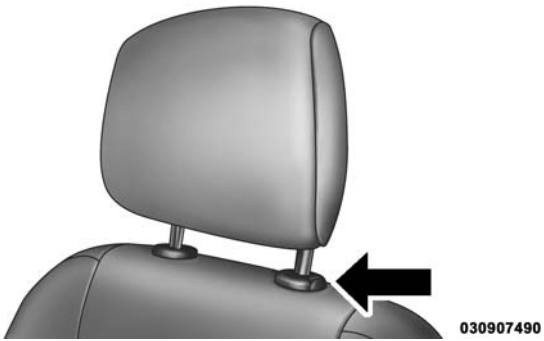

Push Button

For comfort the Active Head Restraints can be tilted forward and rearward. To tilt the head restraint closer to the back of your head, pull forward on the bottom of the head restraint. Push rearward on the bottom of the head restraint to move the head restraint away from your head.

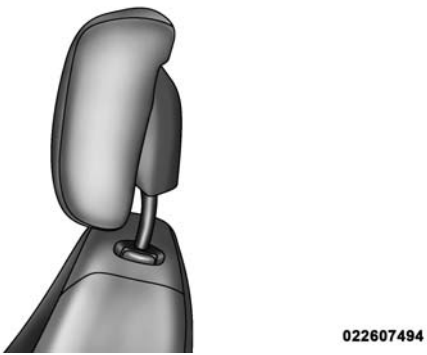

Active Head Restraint (Normal Position)

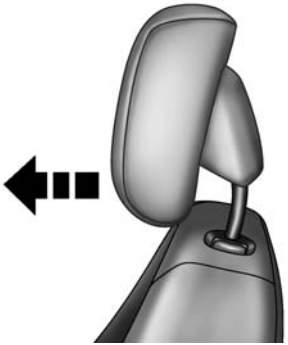

Active Head Restraint (Tilted)

NOTE:

- The head restraints should only be removed by qualified technicians, for service purposes only. If either of the head restraints require removal, see your authorized dealer.
- In the event of deployment of an Active Head Restraint, refer to "Occupant Restraints/Resetting Active Head Restraints (AHR)" in "Things to Know Before Starting Your Vehicle" for further information.

WARNING!

- **Do not place items over the top of the Active Head Restraint, such as coats, seat covers or portable DVD players. These items may interfere with the operation of the Active Head Restraint in the event of a collision and could result in serious injury or death.**

(Continued)

WARNING! (Continued)

- **Active Head Restraints may be deployed if they are struck by an object such as a hand, foot or loose cargo. To avoid accidental deployment of the Active Head Restraint ensure that all cargo is secured, as loose cargo could contact the Active Head Restraint during sudden stops. Failure to follow this warning could cause personal injury if the Active Head Restraint is deployed.**

Head Restraints — Rear Seats

The rear seat head restraints are fixed and cannot be adjusted. For proper routing of a Child Seat Tether refer to "Occupant Restraints" in "Things to Know Before Starting Your Vehicle" for further information.

TO OPEN AND CLOSE THE HOOD

Two latches must be released to open the hood.

1. Pull the hood release lever located under the left side of the instrument panel.

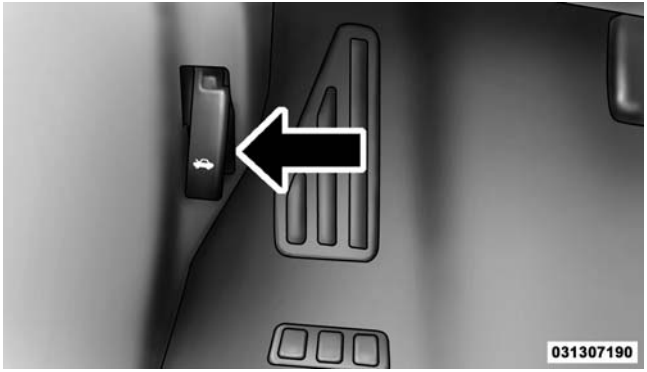

Hood Release Lever

2. Move to the outside of the vehicle and lift the secondary latch underneath the center front edge of the hood and raise the hood.

Hood Safety Latch Location

Use the hood prop rod to secure the hood in the open position. Place the upper end of the prop rod in the hole on the underside of the hood.

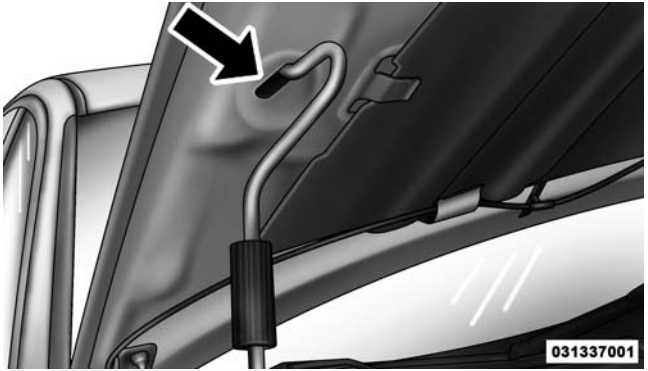

Hood Prop Rod

Before closing the hood, make sure to stow the prop rod in its proper location.

CAUTION!

To prevent possible damage, do not slam the hood to close it. Use a firm downward push at the center of the hood to ensure that both latches engage.

WARNING!

Be sure the hood is fully latched before driving your vehicle. If the hood is not fully latched, it could open when the vehicle is in motion and block your vision. Failure to follow this warning could result in serious injury or death.

LIGHTS

Multifunction Lever

The multifunction lever controls the operation of the parking lights, headlights, headlight beam selection, passing light, fog lights, instrument panel light dimming and turn signals. The multifunction lever is located on the left side of the steering column.

031407547

Multifunction Lever

Headlights And Parking Lights

Turn the end of the multifunction lever to the first detent for parking light operation. Turn to the second detent for headlight operation.

031407548

Headlight Switch

Automatic Headlights — If Equipped

Turning the end of the multifunction lever to the third detent (AUTO), will activate the automatic headlight system.

031407553

Headlight Switch

With the engine running and the multifunction lever in the AUTO position, the headlights will turn on and turn off based on the surrounding light levels.

Headlights With Wipers (Available With Automatic Headlights Only)

When this feature is active, the headlights will turn on approximately 10 seconds after the wipers are turned on if the multifunction lever is placed in the AUTO position. In addition, the headlights will turn off when the wipers are turned off if they were turned on by this feature.

The Headlights with Wipers feature can be turned on or off through the Electronic Vehicle Information Center (EVIC) — if equipped. Refer to "Electronic Vehicle Information Center (EVIC)/Customer-Programmable Features" in "Understanding Your Instrument Panel" for further information.

Headlight Time Delay

There is also a feature that delays turning off the vehicle lights for 30, 60 or 90 seconds after the ignition switch is turned OFF. To activate the headlight delay, the multifunction lever must be rotated to the off position after the ignition switch is turned OFF. Only the headlights will illuminate during this time. Refer to "Electronic Vehicle Information Center (EVIC)/Customer-Programmable Features" in "Understanding Your Instrument Panel" for further information.

Lights On Reminder

If the headlights or parking lights are on after the ignition is turned OFF, a chime will sound to alert the driver when the driver's door is opened.

Turn Signals

Move the multifunction lever up or down and the arrows on each side of the instrument cluster flash to show proper operation of the front and rear turn signal lights.

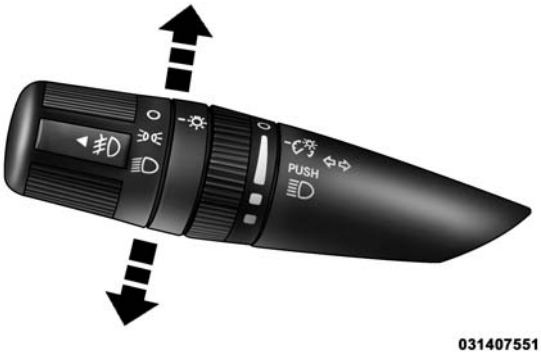

Turn Signal Control

NOTE: If either light remains on and does not flash, or there is a very fast flash rate, check for a defective outside light bulb. If an indicator fails to light when the lever is moved, it would suggest that the indicator bulb is defective.

Lane Change Assist

Tap the lever up or down once, without moving beyond the detent, and the turn signal (right or left) will flash three times then automatically turn off.

High/Low Beam Switch

Push the multifunction lever away from you to switch the headlights to high beam. Pull the multifunction lever toward you to switch the headlights back to low beam.

Flash-To-Pass

You can signal another vehicle with your headlights by lightly pulling the multifunction lever toward you. This will turn on the high beam headlights until the lever is released.

NOTE: If the multifunction lever is held in the flash-to-pass position for more than 15 seconds, the high beams will shut off. If this occurs, wait 30 seconds for the next flash-to-pass operation.

Fog Lights — If Equipped

The front fog light switch is on the multifunction lever. To activate the front fog lights, turn on the parking lights or the low beam headlights and pull out the end of the multifunction lever.

031407550

Front Fog Light Operation

NOTE: The front fog lights will only operate with the headlights on low beam. Selecting high beam headlights will turn off the front fog lights.

Daytime Running Lights — If Equipped

The front turn signal lamps will turn on as Daytime Running Lights whenever the ignition is ON, the engine is running, the headlight switch is off, the parking brake is released and the shift lever is in any position except PARK.

NOTE: The Daytime Running Lights will flash when a turn signal is in operation and return to DRL mode when the turn signal is not operating.

Instrument Panel Dimmer

Rotate the center portion of the lever to the extreme bottom position to fully dim the instrument panel lights and prevent the interior lights from illuminating when a door is opened.

Rotate the center portion of the lever up to increase the brightness of the instrument panel lights when the parking lights or headlights are on.

Rotate the center portion of the lever upward to the next detent position to brighten the odometer and radio when the parking lights or headlights are on.

Rotate the center portion of the lever upward to the last detent to turn on the interior lighting.

031407549

Dimmer Control

Interior Lights

Two courtesy/reading lights are located in the bottom of the rearview mirror. You can turn these lights on and off from the switches in the mirror or from the dimmer control in the multifunction lever. These lights are also controlled automatically by the Illuminated Entry System.

Courtesy/Reading Light Switches

A courtesy light is also found in the rear of the center console. You can turn this light on and off from the dimmer control in the multifunction lever. This light is also controlled automatically by the Illuminated Entry System.

Battery Saver Feature

To protect the battery, the interior lights will turn off automatically 10 minutes after the ignition switch is moved to the LOCK position. This will occur if the interior lights were switched on manually or are on because a door is open.

WINDSHIELD WIPERS AND WASHERS

The wipers and washers are operated by a switch on the control lever. The lever is located on the right side of the steering column.

031508787

Windshield Wiper/Washer Lever

Rotate the end of the lever to the LO position for low-speed wiper operation, or to the HI position for high-speed wiper operation.

031508788

Changing Wiper Speeds

NOTE: The wipers will automatically return to the park position if you turn the ignition switch OFF while they are operating. The wipers will resume operation when you turn the ignition switch to the ON position again.

CAUTION!

- **Turn the windshield wipers off when driving through an automatic car wash. Damage to the windshield wipers may result if the wiper control is left in any position other than off.**
- **Always remove any buildup of snow that prevents the windshield wiper blades from returning to the off position. If the windshield wiper control is turned off and the blades cannot return to the off position, damage to the wiper motor may occur.**

Intermittent Wiper System

Use the intermittent wiper system when weather conditions make a single wiping cycle with a variable pause between cycles desirable. Rotate the end of the windshield wiper/washer control lever to the first detent, and then turn the end of the lever to select the desired delay interval. There are five delay settings, which allow you to

regulate the wipe interval from a minimum of one cycle every second to a maximum of approximately 18 seconds between cycles.

031508788

Changing Intermittent Settings

NOTE: The wiper delay times depend on vehicle speed. If the vehicle is moving less than 10 mph (16 km/h), delay times will be doubled.

Windshield Washers

To use the washer, pull the windshield wiper/washer control lever toward you and hold it for as long as washer spray is desired.

If you activate the washer while the wiper control is in the delay range, the wipers will operate in low-speed for two wipe cycles after releasing the lever and then resume the intermittent interval previously selected.

If you activate the washer while the wiper control is in the off position, the wipers will operate for two wipe cycles and then turn off.

WARNING!

Sudden loss of visibility through the windshield could lead to a collision. You might not see other vehicles or other obstacles. To avoid sudden icing of

(Continued)

WARNING! (Continued)

the windshield during freezing weather, warm the windshield with defroster before and during windshield washer use.

Mist Feature

Push down on the wiper control lever to activate a single wipe to clear the windshield of road mist or spray from a passing vehicle. As long as the lever is held down, the wipers will continue to operate.

NOTE: The mist feature does not activate the washer pump; therefore, no washer fluid will be sprayed on the windshield. The wash function must be used in order to spray the windshield with washer fluid.

031508789

Mist Control

Headlights With Wipers Feature (Available With Automatic Headlights Only)

When this feature is active, the headlights will turn on approximately 10 seconds after the wipers are turned on if the multifunction lever (on the left side of the steering

column) is placed in the AUTO position. In addition, the headlights will turn off when the wipers are turned off if they were turned on by this feature.

The headlights with wipers feature can be turned on or off through the Electronic Vehicle Information Center (EVIC) — if equipped. Refer to "Electronic Vehicle Information Center (EVIC)/Personal Settings (Customer-Programmable Features)" in "Understanding Your Instrument Panel" for further information.

TILT/TELESCOPING STEERING COLUMN

This feature allows you to tilt the steering column upward or downward. It also allows you to lengthen or shorten the steering column. The tilt/telescoping lever is located below the steering wheel at the end of the steering column.

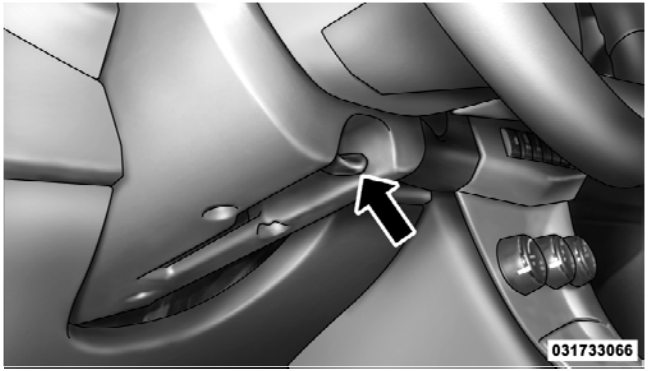

Tilt/Telescoping Lever

To unlock the steering column, push the lever downward. To tilt the steering column, move the steering wheel upward or downward as desired. To lengthen or shorten the steering column, pull the steering wheel outward or push it inward as desired. To lock the steering

column in position, pull the lever upward until fully engaged.

WARNING!

Do not adjust the steering column while driving. Adjusting the steering column while driving or driving with the steering column unlocked, could cause the driver to lose control of the vehicle. Be sure the steering column is locked before driving your vehicle. Failure to follow this warning may result in serious injury or death.

ELECTRONIC SPEED CONTROL — IF EQUIPPED

When engaged, the Electronic Speed Control takes over accelerator operations at speeds greater than 25 mph (40 km/h).

The Electronic Speed Control buttons are located on the right side of the steering wheel.

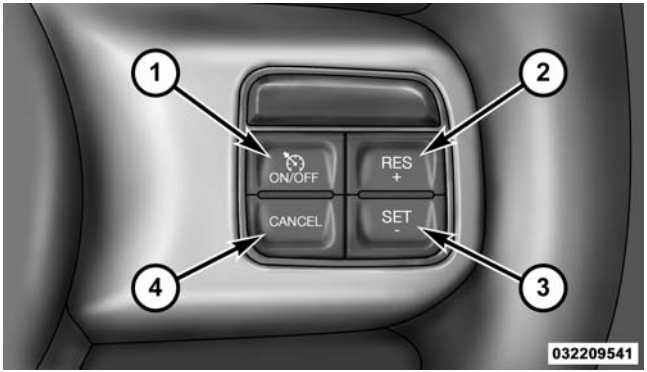

Electronic Speed Control Buttons

1 — ON/OFF	2 — RES +
4 — CANCEL	3 — SET -

NOTE: In order to ensure proper operation, the Electronic Speed Control System has been designed to shut down if multiple Speed Control functions are operated at the same time. If this occurs, the Electronic Speed Control System can be reactivated by pushing the Electronic Speed Control ON/OFF button and resetting the desired vehicle set speed.

To Activate

Push the ON/OFF button. The Cruise Indicator Light in the instrument cluster will illuminate. To turn the system off, push the ON/OFF button a second time. The Cruise Indicator Light will turn off. The system should be turned off when not in use.

WARNING!

Leaving the Electronic Speed Control system on when not in use is dangerous. You could accidentally set the system or cause it to go faster than you want. You could lose control and have an accident. Always leave the system OFF when you are not using it.

To Set A Desired Speed

Turn the Electronic Speed Control ON. When the vehicle has reached the desired speed, press the SET (-) button and release. Release the accelerator and the vehicle will operate at the selected speed.

NOTE: The vehicle should be traveling at a steady speed and on level ground before pressing the SET button.

To Deactivate

A soft tap on the brake pedal, pushing the CANCEL button, or normal brake pressure while slowing the vehicle will deactivate Electronic Speed Control without erasing the set speed memory. Pressing the ON/OFF button or turning the ignition switch OFF erases the set speed memory.

To Resume Speed

To resume a previously set speed, push the RES (+) button and release. Resume can be used at any speed above 20 mph (32 km/h).

To Vary The Speed Setting

When the Electronic Speed Control is set, you can increase speed by pushing the RES (+) button. If the button is continually pressed, the set speed will continue to increase until the button is released, then the new set speed will be established.

Pressing the RES (+) button once will result in a 1 mph (1.6 km/h) increase in set speed. Each subsequent tap of the button results in an increase of 1 mph (1.6 km/h).

To decrease speed while the Electronic Speed Control is set, push the SET (-) button. If the button is continually held in the SET (-) position, the set speed will continue to decrease until the button is released. Release the button when the desired speed is reached, and the new set speed will be established.

Pressing the SET (-) button once will result in a 1 mph (1.6 km/h) decrease in set speed. Each subsequent tap of the button results in a decrease of 1 mph (1.6 km/h).

To Accelerate For Passing

Press the accelerator as you would normally. When the pedal is released, the vehicle will return to the set speed.

Using Electronic Speed Control On Hills

The transmission may downshift on hills to maintain the vehicle set speed.

NOTE: The Electronic Speed Control system maintains speed up and down hills. A slight speed change on moderate hills is normal.

On steep hills, a greater speed loss or gain may occur so it may be preferable to drive without Electronic Speed Control.

WARNING!

Electronic Speed Control can be dangerous where the system cannot maintain a constant speed. Your vehicle could go too fast for the conditions, and you could lose control and have an accident. Do not use Electronic Speed Control in heavy traffic or on roads that are winding, icy, snow-covered or slippery.

GARAGE DOOR OPENER — IF EQUIPPED

HomeLink® replaces up to three hand-held transmitters that operate devices such as garage door openers, motorized gates, lighting or home security systems. The HomeLink® unit is powered by your vehicles 12 Volt battery.

The HomeLink® buttons, located on either the overhead console, headliner or sunvisor, designate the three different HomeLink® channels. The HomeLink® indicator is located above the center button.

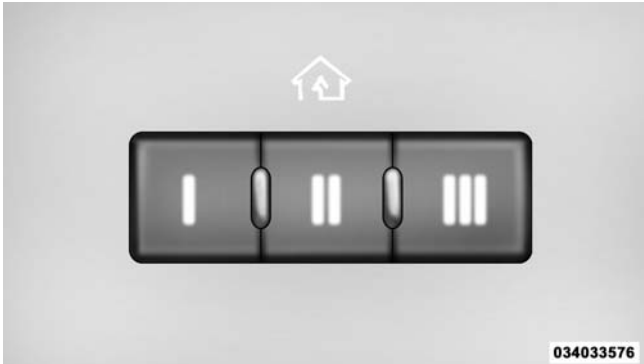

HomeLink® Buttons/Overhead Consoles

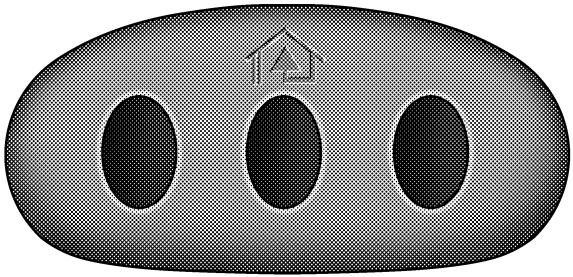

HomeLink® Buttons/Sunvisor/Headliner

NOTE: HomeLink® is disabled when the Vehicle Security Alarm is active.

Before You Begin Programming HomeLink®

Be sure that your vehicle is parked outside of the garage before you begin programming.

For more efficient programming and accurate transmission of the radio-frequency signal it is recommended that a new battery be placed in the hand-held transmitter of the device that is being programmed to the HomeLink® system.

Erase all channels before you begin programming. To erase the channels place the ignition in the ON/RUN position and press and hold the two outside HomeLink® buttons (I and III) for up 20 seconds or until the red indicator flashes.

NOTE:

- Erasing all channels should only be performed when programming HomeLink® for the first time. Do not erase channels when programming additional buttons.
- If you have any problems, or require assistance, please call toll-free 1–800–355–3515 or, on the Internet at www.HomeLink.com for information or assistance.

Programming A Rolling Code

For programming garage door openers that were manufactured after 1995. These garage door openers can be identified by the “LEARN” or “TRAIN” button located where the hanging antenna is attached to the garage door opener. It is NOT the button that is normally used to open and close the door. The name and color of the button may vary by manufacturer.

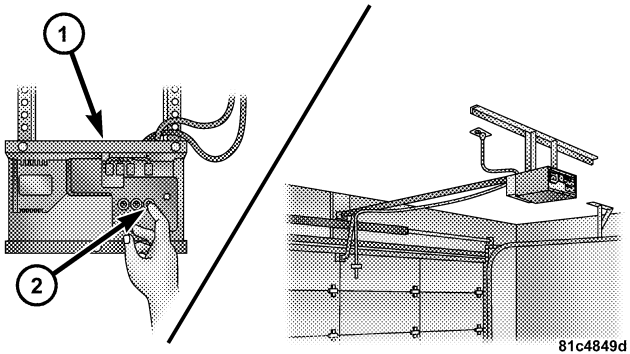

Training The Garage Door Opener

1 — Door Opener
2 — Training Button

1. Turn the ignition switch to the ON/RUN position.
2. Place the hand-held transmitter 1 to 3 in (3 to 8 cm) away from the HomeLink® button you wish to program while keeping the HomeLink® indicator light in view.
3. Simultaneously press and hold both the Homelink® button you want to program and the hand-held transmitter button.
4. Continue to hold both buttons and observe the indicator light. The Homelink® indicator will flash slowly and then rapidly after Homelink® has received the frequency signal from the hand-held transmitter. Release both buttons after the indicator light changes from slow to rapid.

5. At the garage door opener motor (in the garage), locate the "LEARN" or "TRAINING" button. This can usually be found where the hanging antenna wire is attached to the garage door opener/device motor. Firmly press and release the "LEARN" or "TRAINING" button. On some garage door openers/devices there may be a light that blinks when the garage door opener/device is in the LEARN/TRAIN mode.

NOTE: You have 30 seconds in which to initiate the next step after the LEARN button has been pressed.

6. Return to the vehicle and press the programmed HomeLink® button twice (holding the button for two seconds each time). The EVIC will display "CHANNEL # TRANSMIT". If the garage door opener/device activates, programming is complete.

NOTE: If the garage door opener/device does not activate, press the button a third time (for two seconds) to complete the training.

To program the remaining two HomeLink® buttons, repeat each step for each remaining button. DO NOT erase the channels.

Reprogramming A Single HomeLink® Button

To reprogram a channel that has been previously trained, follow these steps:

1. Turn the ignition switch to the ON/RUN position.
2. Press and hold the desired HomeLink® button until the indicator light begins to flash after 20 seconds. **Do not release the button.**
3. **Without releasing the button** proceed with "Programming A Rolling Code" Step 2 and follow all remaining steps.

Programming A Non-Rolling Code

For programming Garage Door Openers manufactured before 1995.

1. Turn the ignition switch to the ON/RUN position.
2. Place the hand-held transmitter 1 to 3 in (3 to 8 cm) away from the HomeLink® button you wish to program while keeping the HomeLink® indicator light in view.
3. Simultaneously press and hold both the Homelink® button you want to program and the hand-held transmitter button.
4. Continue to hold both buttons and observe the indicator light. The Homelink® indicator will flash slowly and then rapidly after HomeLink® has received the frequency signal from the hand-held transmitter. Release both buttons after the indicator light changes from slow to rapid.
5. Press and hold the programmed HomeLink® button and observe the indicator light.
   - If the indicator light stays on constantly, programming is complete and the garage door/device should activate when the HomeLink® button is pressed.
   - To program the two remaining HomeLink® buttons, repeat each step for each remaining button. DO NOT erase the channels.

Reprogramming A Single HomeLink® Button

To reprogram a channel that has been previously trained, follow these steps:

1. Turn the ignition switch to the ON/RUN position.
2. Press and hold the desired HomeLink® button until the indicator light begins to flash after 20 seconds. **Do not release the button.**
3. **Without releasing the button** proceed with "Programming A Non-Rolling Code" Step 2 and follow all remaining steps.

Canadian/Gate Operator Programming

For programming transmitters in Canada/United States that require the transmitter signals to "time-out" after several seconds of transmission.

Canadian radio frequency laws require transmitter signals to time-out (or quit) after several seconds of transmission – which may not be long enough for HomeLink® to pick up the signal during programming. Similar to this Canadian law, some U.S. gate operators are designed to time-out in the same manner.

It may be helpful to unplug the device during the cycling process to prevent possible overheating of the garage door or gate motor.

1. Turn the ignition switch to the ON/RUN position.
2. Place the hand-held transmitter 1 to 3 in (3 to 8 cm) away from the HomeLink® button you wish to program while keeping the HomeLink® indicator light in view.
3. Continue to press and hold the HomeLink® button, while you press and release ("cycle"), your hand-held transmitter every two seconds until HomeLink® has successfully accepted the frequency signal. The indicator light will flash slowly and then rapidly when fully trained.
4. Watch for the HomeLink® indicator to change flash rates. When it changes, it is programmed. It may take up to 30 seconds or longer in rare cases. The garage door may open and close while you are programming.

5. Press and hold the programmed HomeLink® button and observe the indicator light.
   - If the indicator light stays on constantly, programming is complete and the garage door/device should activate when the HomeLink® button is pressed.
   - To program the two remaining HomeLink® buttons, repeat each step for each remaining button. DO NOT erase the channels.

If you unplugged the garage door opener/device for programming, plug it back in at this time.

Reprogramming A Single HomeLink® Button

To reprogram a channel that has been previously trained, follow these steps:

1. Turn the ignition switch to the ON/RUN position.
2. Press and hold the desired HomeLink® button until the indicator light begins to flash after 20 seconds. **Do not release the button.**
3. **Without releasing the button** proceed with "Canadian/Gate Operator Programming" Step 2 and follow all remaining steps.

Using HomeLink®

To operate, press and release the programmed HomeLink® button. Activation will now occur for the programmed device (i.e., garage door opener, gate operator, security system, entry door lock, home/office lighting, etc.,). The hand-held transmitter of the device may also be used at any time.

Security

It is advised to erase all channels before you sell or turn in your vehicle.

To do this, press and hold the two outside buttons for 20 seconds until the red indicator flashes. Note that all channels will be erased. Individual channels cannot be erased.

The HomeLink® Universal Transceiver is disabled when the Vehicle Security Alarm is active.

Troubleshooting Tips

If you are having trouble programming HomeLink®, here are some of the most common solutions:

- Replace the battery in the original hand-held transmitter.
- Press the LEARN button on the Garage Door Opener to complete the training for a Rolling Code.
- Did you unplug the device for programming and remember to plug it back in?

If you have any problems, or require assistance, please call toll-free 1–800–355–3515 or, on the Internet at www.HomeLink.com for information or assistance.

WARNING!

- **Your motorized door or gate will open and close while you are programming the universal transceiver. Do not program the transceiver if people, pets or other objects are in the path of the door or gate. Only use this transceiver with a garage door opener that has a "stop and reverse" feature as required by Federal safety standards. This includes most garage door opener models manufactured after 1982. Do not use a garage door opener without these safety features. Call toll-free 1–800–355–3515 or, on the Internet at www.HomeLink.com for safety information or assistance.**
- **Vehicle exhaust contains carbon monoxide, a dangerous gas. Do not run your vehicle in the garage while programming the transceiver. Exhaust gas can cause serious injury or death.**

General Information

This device complies with FCC rules Part 15 and Industry Canada RSS-210. Operation is subject to the following two conditions:

1. This device may not cause harmful interference.
2. This device must accept any interference that may be received including interference that may cause undesired operation.

NOTE:

- The transmitter has been tested and it complies with FCC and IC rules. Changes or modifications not expressly approved by the party responsible for compliance could void the user's authority to operate the device.
- The term IC before the certification/registration number only signifies that Industry Canada technical specifications were met.

ELECTRICAL POWER OUTLETS

There are two 12 Volt (13 Amp) electrical power outlets on this vehicle. Both of the power outlets are protected by a fuse.

The instrument panel power outlet, located below the climate control knobs, has power available only when the ignition is ON. This power outlet will also operate a conventional cigar lighter unit.

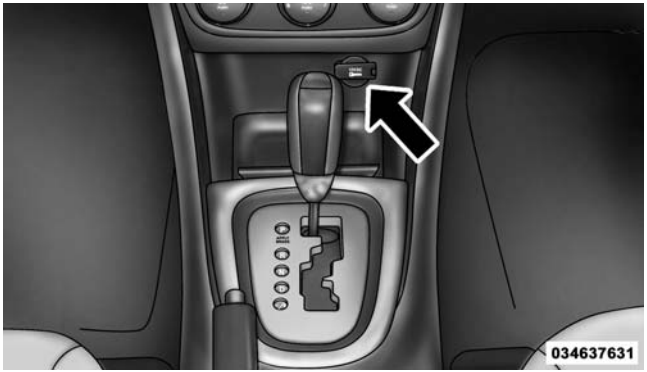

Instrument Panel Power Outlet

NOTE: To preserve the heating element, do not hold the lighter in the heating position.

A second power outlet is located inside the center console.

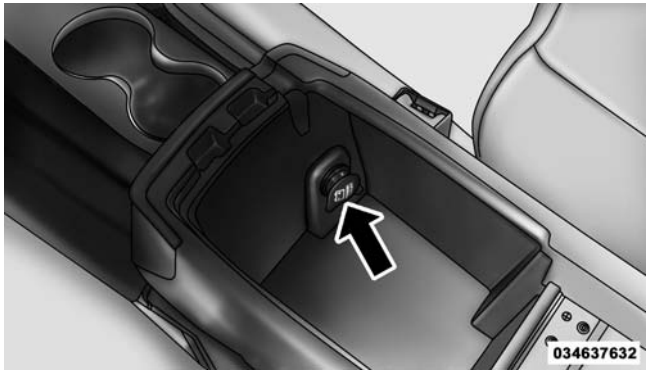

Center Console Power Outlet

The center console power outlet is powered directly from the battery (power available at all times). Items plugged into this power outlet may discharge the battery and/or prevent the engine from starting.

NOTE: To ensure proper operation a MOPAR® knob and element must be used.

CAUTION!

- **Do not exceed the maximum power of 160 Watts (13 Amps) at 12 Volts. If the 160 Watt (13 Amp) power rating is exceeded the fuse protecting the system will need to be replaced.**
- **Power outlets are designed for accessory plugs only. Do not insert any other object in the power outlets as this will damage the outlet and blow the fuse. Improper use of the power outlet can cause damage not covered by your New Vehicle Limited Warranty.**

Power Outlet Fuse Locations

1 — #16 Fuse 15 A Blue Cigar Lighter Instrument Panel
2 — #11 Fuse 15 A Blue Power Outlet Inside Arm Rest

WARNING!

To avoid serious injury or death:

- **Only devices designed for use in this type of outlet should be inserted into any 12 Volt outlet.**
- **Do not touch with wet hands.**
- **Close the lid when not in use and while driving the vehicle.**
- **If this outlet is mishandled, it may cause an electric shock and failure.**

CAUTION!

- **Many accessories that can be plugged in draw power from the vehicle's battery, even when not in use (i.e., cellular phones, etc.). Eventually, if plugged in long enough, the vehicle's battery will discharge sufficiently to degrade battery life and/or prevent the engine from starting.**
- **Accessories that draw higher power (i.e., coolers, vacuum cleaners, lights, etc.) will degrade the battery even more quickly. Only use these intermittently and with greater caution.**
- **After the use of high power draw accessories, or long periods of the vehicle not being started (with accessories still plugged in), the vehicle must be driven a sufficient length of time to allow the generator to recharge the vehicle's battery.**

CIGAR LIGHTER AND ASH RECEIVER — IF EQUIPPED

An optional ash receiver is available from your authorized dealer and will fit in the center console front cupholder.

The optional ash receiver also comes with a cigar lighter that can be used with the power outlets. Refer to "Power Outlets" in "Understanding the Features of Your Vehicle" for further information.

CUPHOLDERS

Front Seat Cupholder

The cupholder in the center console will accommodate either two large size cups or two 20 oz. (.5 L) bottles or cans. The one-piece insert can be removed easily for cleaning. An optional removable ashtray may be located in one of the cupholders.

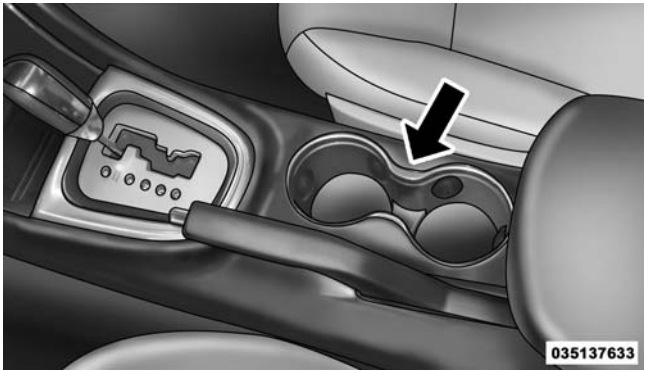

Front Cupholders

Rear Seat Cupholders

Cupholders for the rear seat occupants are located in the armrests. Each cupholder is capable of holding up to a 20 oz. (.5 L) bottle or can.

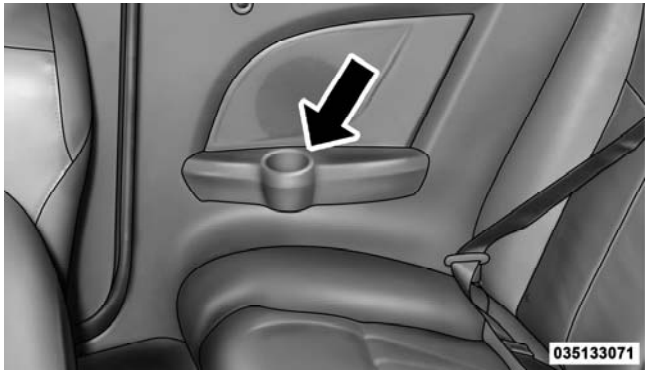

Rear Cupholders

WARNING!

If containers of hot liquid are place in the cupholder, they can spill when the door is closed, burning the occupants. Be careful when closing the doors to avoid injury.

STORAGE

Glovebox Storage Compartment

The glovebox storage compartment is located on the right side of the instrument panel. To open the glovebox, pull outward on the latch handle located on the front of the glovebox.

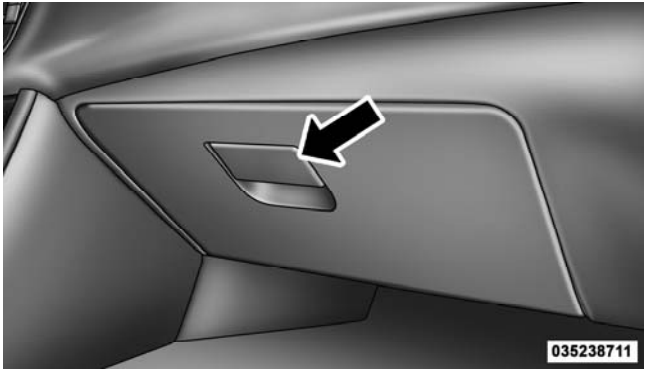

Glovebox Storage Compartment

CONSOLE FEATURES

Storage

The center console is located between the front driver and passenger seats. The center console armrest slides forward from design position to provide added user

comfort. The center console can be used for storage and is also equipped with an electrical power outlet. Refer to "Power Outlets" in "Understanding The Feature of Your Vehicle" for further information.

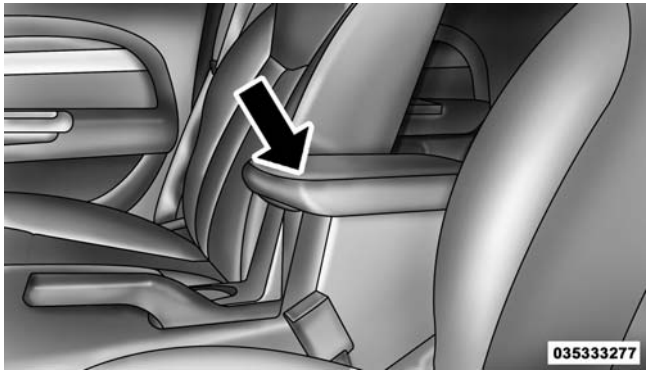

Center Console Armrest

Two separate storage compartments are also located underneath the armrest.

Center Console Storage

The top compartment holds small items, such as a pen and note pad, while the larger bottom compartment will hold CDs and alike. The bottom compartment also contains a 12 Volt power outlet. The console's front opening lid allows for easy access to these compartments.

NOTE:

- A notch in the front of the console base allows for use of a cellular phone while it is plugged into the power outlet with the armrest latched down.
- The power outlet can also energize the cigar lighter in the optional cup holder ash receiver.

WARNING!

Do not operate this vehicle with a console compartment lid in the open position. Cellular phones, music players, and other handheld electronic devices should be stowed while driving. Use of these devices while driving can cause an accident due to distraction, resulting in death or injury.

CARGO AREA FEATURES

The 60/40 split-folding rear seat provides cargo-carrying versatility. The seatbacks fold down easily by pulling nylon tabs between the seatbacks and the bolsters. When the seats are folded down, they provide a continuous, nearly flat extension of the load floor.

When the seatback is folded to the upright position, make sure it is latched by strongly pulling on the top of the seatback above the seat strap.

WARNING!

- **Be certain that the seatback is securely locked into position. If the seatback in not securely locked into position, the seat will not provide the proper stability for child seats and/or passengers. An improperly latched seat could cause serious injury.**

(Continued)

WARNING! (Continued)

- **The cargo area in the rear of the vehicle (with the rear seatbacks in the locked-up or folded down position) should not be used as a play area by children when the vehicle is in motion. They could be seriously injured in a collision. Children should be seated and using the proper restraint system.**
- **To help protect against personal injury, passengers should not be seated in the rear cargo area. The rear cargo space is intended for load carrying purposes only, not for passengers, who should sit in seats and use seat belts.**
- **The weight and position of cargo and passengers can change the vehicle center of gravity and vehicle handling. To avoid loss of control resulting in personal injury, follow these guidelines for loading your vehicle:**

Always place cargo evenly on the cargo floor. Put heavier objects as low and as far forward as possible. Place as much cargo as possible in front of the rear axle. Too much weight or improperly placed weight over or behind the rear axle can cause the rear of the vehicle to sway.

Do not pile luggage or cargo higher than the top of the seatback. This could impair visibility or become a dangerous projectile in a sudden stop or collision.

Ski Pass-Through

There is a ski pass-through door located behind the rear seat armrest that allows longer items, such as snow skis, to be stored in the rear cargo area. Lower the armrest and pull downward on the latch to open the ski pass-through door.

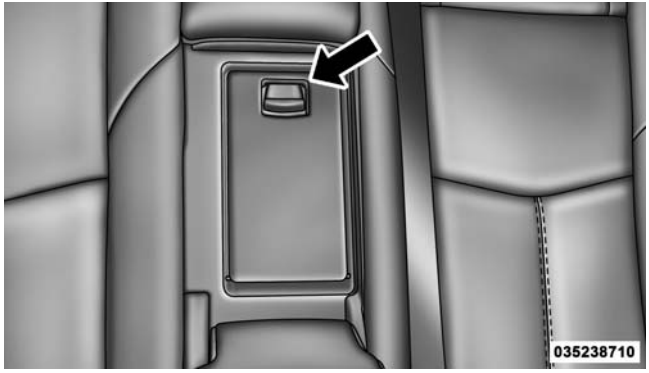

Ski Pass-Through

REAR WINDOW FEATURES

Rear Window Defroster

The rear window defroster button is located on the climate control (Mode) knob. Press this button to turn on the rear window defroster and the heated outside mirrors (if equipped). An indicator in the button will illuminate when the rear window defroster is on. The rear window defroster automatically turns off after approximately 10 minutes. For an additional five minutes of operation, press the button a second time.

NOTE: To prevent excessive battery drain, use the rear window defroster only when the engine is operating.

CAUTION!

Failure to follow these cautions can cause damage to the heating elements:

- **Use care when washing the inside of the rear window. Do not use abrasive window cleaners on the interior surface of the window. Use a soft cloth and a mild washing solution, wiping parallel to the heating elements. Labels can be peeled off after soaking with warm water.**
- **Do not use scrapers, sharp instruments, or abrasive window cleaners on the interior surface of the window.**
- **Keep all objects a safe distance from the window.**

UNDERSTANDING YOUR INSTRUMENT PANEL

CONTENTS

- INSTRUMENT PANEL FEATURES. 218
- INSTRUMENT CLUSTER 219
- INSTRUMENT CLUSTER DESCRIPTIONS 220
- MINI-TRIP COMPUTER — IF EQUIPPED 235
  - Control Buttons 235
- ELECTRONIC VEHICLE INFORMATION CENTER (EVIC) — IF EQUIPPED 236
  - Electronic Vehicle Information Center (EVIC) Displays 239
  - Oil Change Required — If Equipped 240
  - EVIC Main Menu 241
  - Compass Display 241
  - Average Fuel Economy. 244
  - Distance To Empty (DTE) 244
  - Tire PSI. 245
  - Elapsed Time 245
  - EVIC Units Selection (UNITS IN Display) 246
  - System Status 246
  - Personal Settings (Customer-Programmable Features) 246

■ SETTING THE ANALOG CLOCK 249

■ MEDIA CENTER 730N/430/430N (RHR/RER/RBZ/RHB) CD/DVD/HDD/NAV — IF EQUIPPED 249

□ Operating Instructions (Voice Command System) — If Equipped 249

□ Operating Instructions (Uconnect™ Phone) — If Equipped. 249

■ MEDIA CENTER 130 (SALES CODE RES) 250

□ Operating Instructions — Radio Mode. 259

□ Operation Instructions — CD MODE For CD And MP3 Audio Play. 253

□ Notes on Playing MP3 Files 255

□ Operation Instructions - Auxiliary Mode 258

■ MEDIA CENTER 130 WITH SATELLITE RADIO (SALES CODE RES+RSC) 259

□ Operating Instructions — Radio Mode. 259

□ Operation Instructions — CD MODE for CD and MP3 Audio Play 265

□ Notes On Playing MP3 Files 268

□ LIST Button (CD Mode for MP3 Play) 270

□ INFO Button (CD Mode for MP3 Play) 270

□ Uconnect™ Multimedia (Satellite Radio) — If Equipped. 271

■ iPod®/USB/MP3 CONTROL — IF EQUIPPED . .276

□ Connecting The iPod® Or External USB Device 276

□ Using This Feature. 277

- Controlling The iPod® Or External USB Device Using Radio Buttons 278
- Play Mode 278
- List Or Browse Mode 279
- Bluetooth Streaming Audio (BTSA) 281

■ STEERING WHEEL AUDIO CONTROLS — IF EQUIPPED 283
- Radio Operation 284
- CD Player 284

■ CD/DVD DISC MAINTENANCE 284

■ RADIO OPERATION AND MOBILE PHONES . .285

■ CLIMATE CONTROLS 285
- Manual Heating And Air Conditioning 285
- Automatic Temperature Control (ATC) — If Equipped 290
- Operating Tips 296

INSTRUMENT PANEL FEATURES

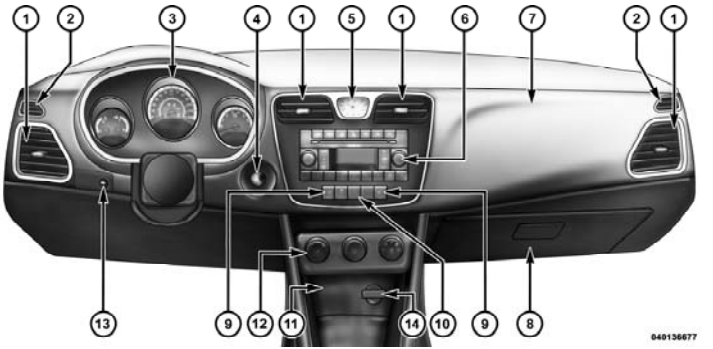

1 — Air Outlet
2 — Side Window Demister Outlet
3 — Instrument Cluster
4 — Ignition Switch
5 — Analog Clock
6 — Radio
7 — Passenger Airbag
8 — Glove Compartment
9 — Heated Seat Switch – If Equipped
10 — Hazard Switch
11 — Storage Compartment
12 — Climate Control
13 — Trunk Release Button
14 — Power Outlet

INSTRUMENT CLUSTER

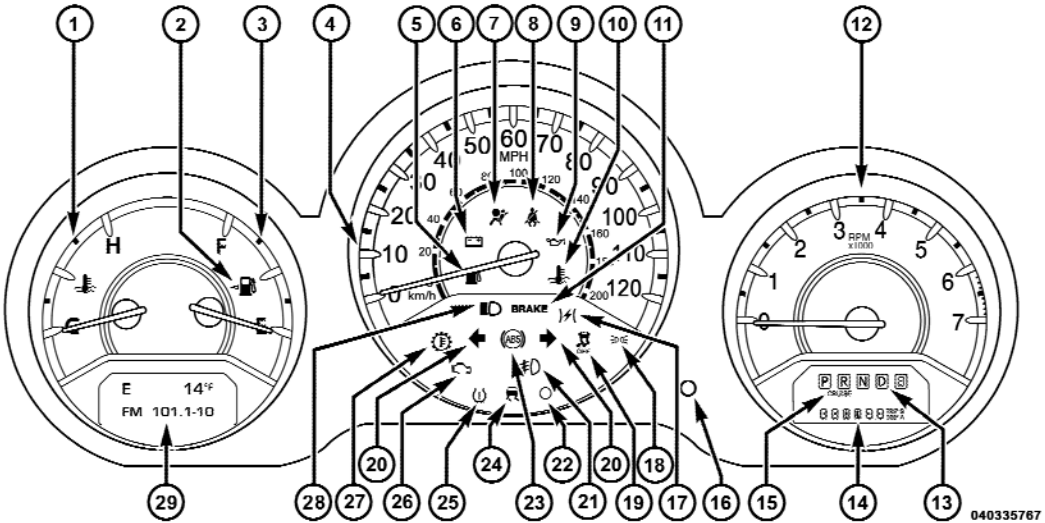

4

INSTRUMENT CLUSTER DESCRIPTIONS

1. Temperature Gauge

The temperature gauge shows engine coolant temperature. Any reading below the red mark of the gauge shows that the engine cooling system is operating properly. The gauge pointer may show a higher than normal temperature when driving in hot weather, up mountain grades, in heavy stop and go traffic, or when towing a trailer.

If the pointer rises to the **H** (red) mark, the instrument cluster will sound a chime. Pull over and stop the vehicle. Idle the vehicle with the air conditioner turned off until the pointer drops back into the normal range. If the pointer remains on the **H** (red) mark, turn the engine off immediately and call for service.

There are steps that you can take to slow down an impending overheat condition. If your air conditioning is on, turn it off. The air conditioning system adds heat to the engine cooling system and turning off the A/C removes this heat. You can also turn the Temperature control to maximum heat, the Mode control to Floor and the Fan control to High. This allows the heater core to act as a supplement to the radiator and aids in removing heat from the engine cooling system.

2. Fuel Door Reminder

This is a reminder that the Fuel Filler Door is located on the left side of the vehicle.

3. Fuel Gauge

When the ignition switch is in the ON/RUN position, the pointer will show the level of fuel remaining in the fuel tank.

4. Speedometer

Indicates the vehicle speed in miles per hour (MPH) and kilometers per hour (km/h).

5. Low Fuel Light

When the fuel level drops to approximately 2.0 gallons (7.6 Liters), the fuel symbol will light and a single chime will sound.

NOTE: This light will remain on until a minimum of approximately 3.0 gallons (11.3 Liters) of fuel is added.

6. Charging System Light

This light shows the status of the electrical charging system. The light should come on briefly when the ignition is first turned on and remain on briefly as a bulb check. If the light stays on or comes on while driving, turn off some of the vehicle's electrical devices, such as the Front Fog Lights or Rear Window Defroster. If the Charging System Light remains on, it means that the vehicle is experiencing a problem with the charging system. Obtain SERVICE IMMEDIATELY. See your local authorized dealer.

If jump starting is required, refer to "Jump Starting Procedures" in "What To Do In Emergencies".

7. Air Bag Warning Light

This light will turn on for four to eight seconds as a bulb check when the ignition switch is first turned to ON/RUN. If the light is either not on during starting, stays on, or turns on while driving, have the system inspected at an authorized dealer as soon as possible. Refer to "Occupant Restraints" in "Things To Know Before Starting Your Vehicle" for further information.

8. Seat Belt Reminder Light

When the ignition switch is first turned to ON/RUN, this light will turn on for four to eight seconds as a bulb check. During the bulb check, if the driver's seat belt is unbuckled, a chime will sound. After the bulb check or when driving, if the driver seat belt remains unbuckled, the Seat Belt Warning Light will flash or remain on continuously. Refer to "Occupant Restraints" in "Things To Know Before Starting Your Vehicle" for further information.

9. Oil Pressure Warning Light

This light indicates low engine oil pressure. The light will come on and remain on when the ignition switch is turned from the OFF to the ON/RUN position, and the light will turn off after the engine is started. If the bulb does not come on during starting, have the system checked by an authorized dealer.

If the light comes on and remains on while driving, stop the vehicle and shut off the engine. **DO NOT OPERATE THE VEHICLE UNTIL THE CAUSE IS CORRECTED.**

The light does not show the quantity of oil in the engine. This can be determined using the procedure shown in "Maintaining Your Vehicle".

10. Engine Temperature Warning Light

This light warns of an overheated engine condition. As engine coolant temperatures rise and the gauge approaches **H**, this indicator will illuminate and a single chime will sound after reaching a set threshold. Further overheating will cause the temperature gauge to pass **H**, and a continuous chime will occur until the engine is allowed to cool or the 4 minutes duration is expired, whichever come first.

If the light turns on while driving, safely pull over and stop the vehicle. If the A/C system is on, turn it off. Also,

shift the transmission into NEUTRAL and idle the vehicle. If the temperature reading does not return to normal, turn the engine off immediately and call for service. Refer to "If Your Engine Overheats" in "What To Do In Emergencies" for further information.

11. Brake Warning Light

BRAKE This light monitors various brake functions, including brake fluid level and parking brake application. If the brake light turns on it may indicate that the parking brake is applied, that the brake fluid level is low, or that there is a problem with the anti-lock brake system.

The dual brake system provides a reserve braking capacity in the event of a failure to a portion of the hydraulic system. Failure of either half of the dual brake system is indicated by the Brake Warning Light which will turn on when the brake fluid level in the master cylinder has dropped below a specified level. The light will remain on until the cause is corrected.

NOTE: The light may flash momentarily during sharp cornering maneuvers which change fluid level conditions. The vehicle should have service performed, and the brake fluid level checked.

If brake failure is indicated, immediate repair is necessary.

WARNING!

Driving a vehicle with the brake light on is dangerous. Part of the brake system may have failed. It will take longer to stop the vehicle. You could have a collision. Have the vehicle checked immediately.

Vehicles equipped with Anti-Lock brakes (ABS), are also equipped with Electronic Brake Force Distribution (EBD).

In the event of an EBD failure, the Brake Warning Light will turn on along with the ABS Light. Immediate repair to the ABS system is required.

The operation of the Brake Warning Light can be checked by turning the ignition switch from the OFF position to the ON/RUN position. The light should illuminate for approximately three seconds. The light should then turn off unless the parking brake is applied or a brake fault is detected. If the light does not illuminate, have the light inspected by an authorized dealer.

The light also will turn on when the parking brake is applied with the ignition switch in the ON/RUN position.

NOTE: This light shows only that the parking brake is applied. It does not show the degree of brake application.

12. Tachometer

The silver area of the scale shows the permissible engine revolutions-per-minute (RPM x 1000) for each gear range. Before reaching the red area, ease up on the accelerator to prevent engine damage.

13. Shift Lever Indicator

The Shift Lever Indicator is self-contained within the instrument cluster. It displays the gear position of the automatic transmission.

NOTE: You must apply the brakes before shifting from PARK.

14. Odometer / Trip Odometer Display Area

The odometer display shows the total distance the vehicle has been driven.

U.S. Federal regulations require that upon transfer of vehicle ownership, the seller certify to the purchaser the

correct mileage that the vehicle has been driven. If your odometer needs to be repaired or serviced, the repair technician should leave the odometer reading the same as it was before the repair or service. If s/he cannot do so, then the odometer must be set at zero, and a sticker must be placed in the door jamb stating what the mileage was before the repair or service. It is a good idea for you to make a record of the odometer reading before the repair/service, so that you can be sure that it is properly reset, or that the door jamb sticker is accurate if the odometer must be reset at zero.

The two trip odometers show individual trip mileage. To switch from odometer to trip odometers, press and release the Trip Odometer button. To reset a trip odometer, display the desired trip odometer to be reset then push and hold the button until the display resets (approximately two seconds). Refer to "Trip Odometer Button" for additional information.

Vehicle Odometer Messages

When the appropriate conditions exist, the odometer will display the following messages:

door . . . . . Door Ajar

dECK . . . . . Trunk Ajar

TOP . . . . . Convertible Top Up/Down

TOP FAIL . . . . . Convertible Top Up/Down Operation Failed

SET CARgO SHIELd . . . . The Convertible Top Cargo Shield Must Be Put In The Stowed Position

SPEEd TOO HIgH . . . Vehicle Speed Is Too High For Convertible Top Up/Down Operation

TOP donE . . . . Convertible Top Up/Down Operation Is Complete

TOP nOT SECUrE . . . Convertible Top Is Not Secured

LoW tirE . . . . . Low Tire Pressure

HOTOIL . . . . . Engine Oil Temperature Exceeds Safe Threshold

gASCAP . . . . . Fuel Cap Fault

CHANgE OIL . . . . . Oil Change Required

NOTE: If the instrument cluster is equipped with the optional Electronic Vehicle Information Center (EVIC), then all warnings including ”Low Tire,” “Door Ajar” and “Trunk Ajar” will only display in the EVIC. (Refer to “Electronic Vehicle Information Center (EVIC)” for specific messages).

Refer to “Convertible Top Operation” in “Understanding The Features Of Your Vehicle” for a table that explains how long each message is displayed and the conditions under which each message is displayed.

LoW tirE

When the appropriate condition exists, the odometer display will toggle between LoW and TirE for three cycles.

HOTOIL

When this message is displayed there is a engine oil over-temperature condition. When this condition occurs, the “HOTOIL” message will be displayed in the odometer along with a chime.

Refer to “If Your Engine Overheats” in “What To Do In Emergencies”.

gASCAP

If the vehicle diagnostic system detects a leak or change in the evaporative system, or the fuel filler cap is loose, improperly installed, or damaged, the words "gASCAP" will display in the odometer display area. If this occurs, tighten the fuel filler cap properly and press the odometer reset button to turn off the "gASCAP" message. (Refer to "Onboard Diagnostic System — OBDII" in "Maintaining Your Vehicle" for further information). If the problem continues, the message will appear the next time the vehicle is started. See your authorized dealer service center as soon as possible.

CHANgE OIL

Your vehicle is equipped with an engine oil change indicator system. The "CHAngE OIL" message will flash in the instrument cluster odometer for approximately 12 seconds after a single chime has sounded to indicate the next scheduled oil change interval. The engine oil change indicator system is duty cycle based, which means the engine oil change interval may fluctuate dependent upon your personal driving style.

Unless reset, this message will continue to display each time you turn the ignition switch to the "ON" position. To turn off the message temporarily, press and release the Trip Odometer button on the instrument cluster. To reset the oil change indicator system (after performing the scheduled maintenance) perform the following procedure:

Turn the ignition switch to the ON/RUN position (do not start the engine).

Fully depress the accelerator pedal slowly 3 times within 10 seconds.

Turn the ignition switch to the LOCK position.

NOTE: If the indicator message illuminates when you start the vehicle, the oil change indicator system did not reset. If necessary, repeat this procedure.

For vehicles equipped with the Electronic Vehicle Information Center (EVIC), refer to "Electronic Vehicle Information Center (EVIC)".

15. Cruise Indicator — If Equipped

CRUISE This indicator shows that the Electronic Speed Control System is ON.

16. Odometer/Trip Odometer Reset Button

Trip Odometer

Press and release this button to change the display from odometer to "Trip A." Press and release it a second time to change the display to "Trip B." Press and release it a third time to change the display back to the odometer.

To reset the trip odometer, first display the trip mileage that you want to reset, "Trip A" or "Trip B." Then push and hold the button (approximately 2 seconds) until the display resets to 0 miles (kilometers). The odometer must be in Trip Mode to reset the trip odometer.

17. Electronic Throttle Control (ETC) Indicator Light

This light informs you of a problem with the Electronic Throttle Control (ETC) system. If a problem is detected, the light will come on while the engine is running. If the light remains lit with the engine running, your vehicle will usually be drivable and not need towing, however see your authorized dealer for service as soon as possible.

If the light is flashing when the engine is running you may experience power loss, an elevated/rough idle, and increased brake pedal effort, and your vehicle may require towing. Immediate service is required.

The light will come on when the ignition switch is first turned on and remain on briefly as a bulb check. This is normal. If the light does not come on during starting, have the system checked by an authorized dealer.

18. Park/Headlight ON Indicator — If Equipped

This indicator will illuminate when the park lights or headlights are turned on.

19. Electronic Stability Control (ESC) OFF Indicator Light — If Equipped

This light indicates the Electronic Stability Control system (ESC) has been turned off by the driver.

20. Turn Signal Indicators

The left or right arrow will flash with the corresponding exterior turn signal lights when the turn signal lever is operated. A chime will sound if the vehicle is driven more than 1 mile (1.6 km) with either turn signal on.

NOTE: If either indicator flashes at a rapid rate, check for a defective outside light bulb.

21. Front Fog Light Indicator — If Equipped

This indicator will illuminate when the front fog lights are on.

22. Vehicle Security Light — If Equipped

This light will flash rapidly for approximately 16 seconds when the alarm system is arming. The light will begin to flash slowly indicating that the system is armed. The light will stop flashing when the vehicle is disarmed.

23. Anti-Lock Brake (ABS) Light — If Equipped

This light monitors the ABS. This light will come on when the ignition key is turned to the ON/RUN position and may stay on for approximately three seconds.

If the ABS light remains on or comes on during driving, it indicates that the Anti-Lock portion of the brake system is not functioning and that service is required, however, the conventional brake system will continue to operate normally provided that the BRAKE warning light is not on.

If the ABS light is on, the brake system should be serviced as soon as possible to restore the benefit of Anti-Lock Brakes.

The ABS warning light should be checked frequently to assure that it is operating properly. Turn the ignition key to the on position, but do not start the vehicle. The light should come on. If the light does not come on, have the system inspected by an authorized dealer.

24. Electronic Stability Control (ESC) Activation/ Malfunction Indicator Light — If Equipped

The "ESC Activation/Malfunction Indicator Light" in the instrument cluster will come on when the ignition switch is turned to the ON/RUN position. It should go out with the engine running. If the "ESC Activation/Malfunction Indicator Light" comes on continuously with the engine running, a malfunction has been detected in the ESC system. If this light remains on after several ignition cycles, and the vehicle has been driven several miles (kilometers) at speeds greater than 30 mph (48 km/h), see your authorized dealer as soon as possible to have the problem diagnosed and corrected.

NOTE:

The "ESC Off Indicator Light" and the "ESC Activation/ Malfunction Indicator Light" come on momentarily each time the ignition switch is turned to ON/RUN.

Each time the ignition is turned to ON/RUN, the ESC system will be ON, even if it was turned off previously.

The ESC system will make buzzing or clicking sounds when it is active. This is normal; the sounds will stop when ESC becomes inactive following the maneuver that caused the ESC activation.

25. Tire Pressure Monitoring Telltale Light

Each tire, including the spare (if provided), should be checked monthly when cold and inflated to the inflation pressure recommended by the vehicle manufacturer on the vehicle placard or tire inflation pressure label. (If your vehicle has tires of a different size than the size indicated on the vehicle placard or tire inflation pressure label, you should determine the proper tire inflation pressure for those tires.)

As an added safety feature, your vehicle has been equipped with a Tire Pressure Monitoring System (TPMS) that illuminates a low tire pressure telltale when one or more of your tires is significantly under-inflated. Accordingly, when the low tire pressure telltale illuminates, you should stop and check your tires as soon as possible, and inflate them to the proper pressure. Driving on a significantly under-inflated tire causes the tire to overheat and can lead to tire failure. Under-inflation also

reduces fuel efficiency and tire tread life, and may affect the vehicle's handling and stopping ability.

Please note that the TPMS is not a substitute for proper tire maintenance, and it is the driver's responsibility to maintain correct tire pressure, even if under-inflation has not reached the level to trigger illumination of the TPMS low tire pressure telltale.

Your vehicle has also been equipped with a TPMS malfunction indicator to indicate when the system is not operating properly. The TPMS malfunction indicator is combined with the low tire pressure telltale. When the system detects a malfunction, the telltale will flash for approximately one minute and then remain continuously illuminated. This sequence will continue upon subsequent vehicle start-ups as long as the malfunction exists. When the malfunction indicator is illuminated, the system may not be able to detect or signal low tire pressure as intended. TPMS malfunctions may occur for a variety of reasons, including the installation of replacement or alternate tires or wheels on the vehicle that prevent the TPMS from functioning properly. Always check the TPMS malfunction telltale after replacing one or more tires or wheels on your vehicle, to ensure that the replacement or alternate tires and wheels allow the TPMS to continue to function properly.

CAUTION!

The TPMS has been optimized for the original equipment tires and wheels. TPMS pressures and warning have been established for the tire size equipped on your vehicle. Undesirable system operation or sensor damage may result when using replacement equipment that is not of the same size, type, and/or style. Aftermarket wheels can cause sensor damage. Do not use tire sealant from a can or balance beads if your vehicle is equipped with a TPMS, as damage to the sensors may result.

26. Malfunction Indicator Light (MIL)

The Malfunction Indicator Light (MIL) is part of an onboard diagnostic system called OBD that monitors emissions, engine, and automatic transmission control systems. The light will illuminate when the key is in the ON/RUN position before engine start. If the bulb does not come on when turning the key from LOCK to ON/RUN, have the condition checked promptly.

Certain conditions, such as a loose or missing gas cap, poor fuel quality, etc., may illuminate the light after engine start. The vehicle should be serviced if the light stays on through several of your typical driving cycles. In most situations, the vehicle will drive normally and will not require towing.

CAUTION!

Prolonged driving with the MIL on could cause damage to the engine control system. It also could affect fuel economy and drivability. If the MIL is flashing, severe catalytic converter damage and power loss will soon occur. Immediate service is required.

WARNING!

A malfunctioning catalytic converter, as referenced above, can reach higher temperatures than in normal operating conditions. This can cause a fire if you drive slowly or park over flammable substances such as dry plants, wood, cardboard, etc. This could result in death or serious injury to the driver, occupants or others.

27. Transmission Temperature Warning Light — If Equipped

This light indicates that the transmission fluid temperature is running hot. This may occur with severe usage, such as trailer towing. If this light turns on while driving, safely pull over and stop the vehicle. Then, shift the transmission into NEUTRAL and run the engine at idle or faster until the light turns off.

CAUTION!

Continuous driving with the Transmission Temperature Warning Light illuminated will eventually cause severe transmission damage or transmission failure.

WARNING!

If the Transmission Temperature Warning Light is illuminated and you continue operating the vehicle, in some circumstances you could cause the fluid to boil over, come in contact with hot engine or exhaust components and cause a fire.

28. High Beam Indicator

This light indicates that the headlights are on high beam. Pull the turn signal lever toward the steering wheel to switch the headlights to low beam.

29. Electronic Vehicle Information Center (EVIC) Display — If Equipped

This display shows the EVIC messages when the appropriate conditions exist. Refer to “Electronic Vehicle Information Center (EVIC)” for further information.

MINI-TRIP COMPUTER — IF EQUIPPED

The Mini-Trip Computer is located in the instrument cluster and features a driver-interactive trip information and temperature display.

NOTE: The system will display the last known outside temperature when starting the vehicle and may need to be driven several minutes before the updated temperature is displayed. Engine temperature can also affect the displayed temperature; therefore, temperature readings are not updated when the vehicle is not moving.

Control Buttons

Mini-Trip Control Buttons

STEP Button

Press the STEP button located on the steering wheel to scroll through sub menus (i.e., Temperature, Trip Functions: Odometer, Trip A, Trip B).

RESET Button

To reset the display shown, turn the ignition switch to the ON position, then press and hold the RESET button located on the steering wheel.

The following displays can be reset or changed:

- Trip A
- Trip B

Trip Odometer (ODO)

This display shows the distance traveled since the last reset. Press and release the STEP button on the instrument cluster to switch from odometer, to Trip A or Trip B.

Trip A

Shows the total distance traveled for Trip A since the last reset.

Trip B

Shows the total distance traveled for Trip B since the last reset.

ELECTRONIC VEHICLE INFORMATION CENTER (EVIC) — IF EQUIPPED

The Electronic Vehicle Information Center (EVIC) features a driver-interactive display that is located in the instrument cluster.

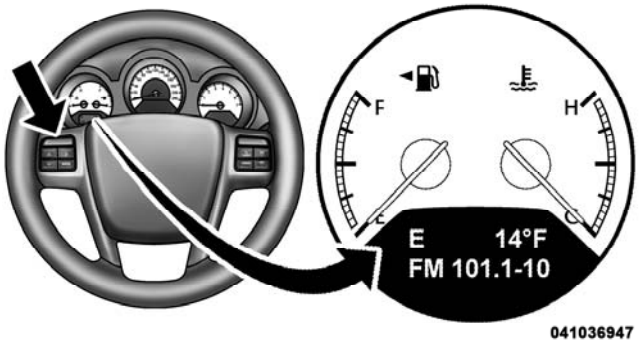

Electronic Vehicle Information Center (EVIC)

The EVIC consists of the following:

- Compass Heading Display (N, S, E, W, NE, NW, SE, SW)
- Mileage (Avg/MPG)
- Miles To Empty
- Low Tire Information (Tire Pressure Monitor System (TPMS) Displays) — if equipped
- Timer
- Units
- System Warnings (Door Ajar, etc.)
- Personal Settings (Customer-Programmable Features)
- Outside Temperature Display (°F or °C)
- Audio Mode Displays – 12 preset Radio Stations or CD Title and Track number when playing

The system allows the driver to select information by pressing the following buttons mounted on the steering wheel:

041035449

EVIC Steering Wheel Buttons

- *MENU Button*

MENU

Press and release the MENU button to advance the display to each of the EVIC Main Menu features. Upon reaching the last item in the Main Menu the EVIC will advance to the first item in the Main Menu with the next MENU button press and release.

- *DOWN Button*

▽

Press and release the DOWN button to advance the display through the various Trip Functions or Personal Settings.

- *COMPASS Button*

N

Press and release the COMPASS button to display the compass heading, the outside temperature, and Audio Info (when the radio is on) screen when the current screen is not the compass, outside temp, audio info screen.

- *SELECT Button*

Press and release the SELECT Button to accept a selection. The SELECT Button also resets various Trip Functions.

Electronic Vehicle Information Center (EVIC) Displays

When the appropriate conditions exist, the EVIC displays the following messages:

- Turn Signal On (with a continuous warning chime after one mile traveled)
- Left Front Turn Signal Lamp Out (with a single chime)
- Left Rear Turn Signal Lamp Out (with a single chime)
- Right Front Turn Signal Lamp Out (with a single chime)
- Right Rear Turn Signal Lamp Out (with a single chime)
- RKE (Remote Keyless Entry) Battery Low (with a single chime)
- Personal Settings Not Avail – Vehicle Not in Park
- Personal Settings Not Avail – Vehicle in Motion
- Door Ajar (with vehicle graphic showing which door is open. A single chime sounds if the vehicle is in motion).
- Doors Ajar (with vehicle graphic showing which doors are open. A single chime sounds if the vehicle is in motion).
- Trunk Open (with vehicle graphic showing and open trunk and A single chime)
- Lights On
- Key In Ignition
- Remote start aborted — Door ajar

- Remote start aborted — Hood ajar
- Remote start aborted — Trunk ajar
- Remote start aborted — Fuel low
- Remote start disabled — System fault
- Convertible Top Not Secured (with a single chime)
- Convertible Top Complete (with a single chime)
- Secure Cargo Shield (with a single chime)
- Speed Too High (with a single chime)
- Convertible Top Malfunction (with a single chime)
- Oil Change Required (with a single chime)
- Low Tire (with a graphic of the car showing which tire(s) is/are low - with a single chime). Refer to "Tire Pressure Monitoring System" in "Starting and Operating".
- Check TPM System (with a single chime) Refer to "Tire Pressure Monitoring System" in "Starting and Operating".

Oil Change Required — If Equipped

Your vehicle is equipped with an engine oil change indicator system. The "Oil Change Required" message will flash in the EVIC display for approximately five seconds after a single chime has sounded to indicate the next scheduled oil change interval. The engine oil change indicator system is duty cycle based, which means the engine oil change interval may fluctuate dependent upon your personal driving style.

Unless reset, this message will continue to display each time you turn the ignition switch to the ON/RUN position. To turn off the message temporarily, press and release the Menu button. To reset the oil change indicator system (after performing the scheduled maintenance), perform the following procedure:

1. Turn the ignition switch to the ON position (Do not start the engine.)
2. Fully depress the accelerator pedal slowly three times within 10 seconds.
3. Turn the ignition switch to the LOCK position.

NOTE: If the indicator message illuminates when you start the vehicle, the oil change indicator system did not reset. If necessary repeat this procedure.

EVIC Main Menu

To step to each main menu feature press and release the MENU button once for each step. A step from the last item in the list will cause the first item in the feature list to be displayed. The following features are in the Main menu:

- Compass, Outside Temperature, Audio Information (if radio is on) display
- Average Fuel Economy
- Distance to Empty
- Tire Pressure Status display
- Elapsed Time
- EVIC Units Selection
- System Status
- Personal Settings

Compass Display

COMPASS Button

The compass heading indicates the direction the vehicle is facing. Press and release the compass button to display one of eight compass headings, the outside temperature, and audio information (if the radio is on) if the EVIC display is not already displaying this screen.

NOTE: The system will display the last known outside temperature when starting the vehicle and may need to be driven several minutes before the updated temperature is displayed. Engine temperature can also affect the displayed temperature; therefore, temperature readings are not updated when the vehicle is not moving.

Automatic Compass Calibration

This compass is self-calibrating, which eliminates the need to calibrate the compass manually. When the vehicle is new, the compass may appear erratic and the EVIC will flash the "CAL" indicator until the compass is calibrated. You may calibrate the compass by completing one or more 360–degree turns (in an area free from large metal or metallic objects) until the CAL indicator in the EVIC turns off. The compass will now function normally.

NOTE: A good calibration requires a level surface and an environment free from large metallic objects such as buildings, bridges, underground cables, railroad tracks, etc.

Manual Compass Calibration

If the compass appears erratic or inaccurate, and the variance has been properly set, you may wish to manually recalibrate the compass. To manually calibrate the compass:

1. Start the engine. Leave the shift lever in PARK in order to enter the EVIC Programming Menus.
2. Press and release the MENU button until "Personal Settings" displays in the EVIC.
3. Press and release the DOWN button until "Calibrate Compass Yes" displays in the EVIC.

4. Press and release the SELECT button and the "CAL" indicator will start flashing.
5. Drive the vehicle slowly (under 5 mph / 8 km/h), completing one or more circles (in an area free from large metal or metallic objects) until the "CAL" indicator turns off. The compass will now function normally.

Compass Variance

Compass Variance is the difference between Magnetic North and Geographic North. To compensate for the differences, the variance should be set for the zone where the vehicle is driven, per the zone map. Once properly set, the compass will automatically compensate for the differences and provide the most accurate compass heading.

NOTE: Magnetic and battery powered devices, (such as cell phones, iPod's, radar detectors, PDA's and laptops) should be kept away from the top of the instrument panel. This is where the compass module is located and such devices may interfere and cause false compass readings.

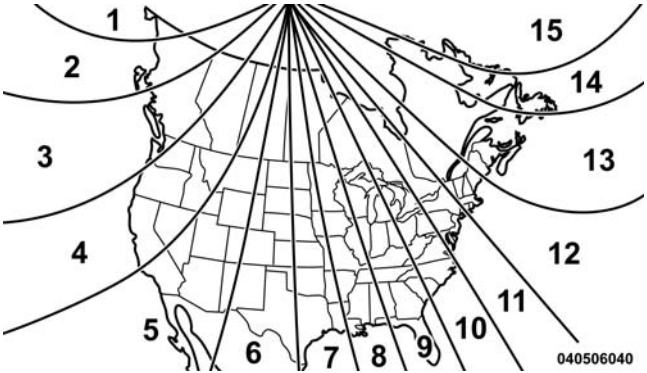

Compass Variance Map

To Change Compass Variance:

1. Turn the ignition switch to the ON position. Leave the shift lever in PARK.
2. Press and release the MENU button until “Personal Settings” displays in the EVIC.
3. Press and release the DOWN button until “Compass Variance” and the current Variance Value displays in the EVIC.
4. Press and release the SELECT button to increment the Variance Value by one, (one button press per update), until the proper variance zone is selected according to the map.

NOTE: The Variance Values will wrap around from 15 back to 1. The Default Variance is Zone 8.

Average Fuel Economy

Shows the average fuel economy since the last reset. Average Fuel Economy can be reset by pressing and holding the SELECT button (as prompted in the EVIC display). Upon reset, the history information will be erased, and the averaging will continue from the last fuel average reading before the reset.

Distance To Empty (DTE)

Shows the estimated distance that can be traveled with the fuel remaining in the tank. This estimated distance is determined by a weighted average of the instantaneous and average fuel economy, according to the current fuel tank level. DTE cannot be reset.

NOTE: Significant changes in driving style or vehicle loading will greatly affect the actual drivable distance of the vehicle, regardless of the DTE display value.

When the DTE value is less than 30 miles (48 km) estimated driving distance, the DTE display will change to a text display of "LOW FUEL". This display will continue until the vehicle runs out of fuel. Adding a significant amount of fuel to the vehicle will turn off the LOW FUEL text and a new DTE value will display.

Tire PSI

Press and release the MENU button until "Tire PSI" is displayed.

Tire pressure information is displayed as follows:

- If tire pressure is OK for all tires, TIRE and a vehicle graphic are displayed with tire pressure values in each corner or the graphic.
- If one or more tires have low pressure, LOW TIRE and a vehicle graphic are displayed with tire pressure values in each corner of the graphic. Tire pressure values that are too low will be flashing.
- If the Tire Pressure System requires service, "Check TPM System" is displayed. Tire PSI is an information only function and cannot be reset.

Elapsed Time

Shows the total elapsed time of travel since the last reset. Elapsed time will increment when the ignition switch is in the RUN or START position.

Elapsed time is displayed as follows:

hours:minutes:seconds

Elapsed time can be reset by pressing and holding the SELECT button (as prompted in the EVIC display). Upon reset all digits will change to zeros and time will start incrementing again if the ignition switch is in RUN or START.

EVIC Units Selection (UNITS IN Display)

Displays the units used for the Outside Temperature, Average Fuel Economy, Distance to Empty and Tire Pressure features. Press and Release the SELECT button to toggle units between ″U.S.″ and ″METRIC″.

System Status

Displays SYSTEM OK if there are no active Warning Messages stored. Pressing and releasing the DOWN button when SYSTEM OK is displayed will do nothing. Displays SYSTEM WARNINGS PRESENT if there are active Warning Messages stored. Pressing and releasing the DOWN button when SYSTEM WARNINGS PRESENT is displayed will display each stored warning for each button press. Press and Release the MENU button to return to the Main Menu.

Personal Settings (Customer-Programmable Features)

Personal Settings allows the driver to set and recall features when the automatic transaxle is in PARK.

Press and release the MENU button until “Personal Settings” displays in the EVIC.

Press and release the DOWN button to display the following programmable features:

Language

When in this display you may select different languages for all display nomenclature, including the trip functions. Pressing the SELECT button while in this display selects English, Spanish, French, German, Italian, or Dutch depending on availability. As you continue, the displayed information will be shown in the selected language.

Auto Unlock On Exit

When ON is selected and the transaxle is in the PARK or NEUTRAL position, all doors will unlock when the driver's door is opened. To make your selection, press the SELECT button until ON or OFF appears.

RKE Unlock

When **Driver Door 1st Press** is selected, only the driver's door will unlock on the first press of the Remote Keyless Entry (RKE) transmitter UNLOCK button. When Driver Door 1st Press is selected, you must press the RKE transmitter UNLOCK button twice to unlock the passenger's doors. When **All Doors 1st Press** is selected, all of the doors will unlock on the first press of the RKE transmitter UNLOCK button. To make your selection, press and release the SELECT button until "Driver Door 1st Press" or "All Doors 1st Press" appears.

Flash Lamp with LOCK

When ON is selected, the front and rear turn signals will flash when the doors are locked or unlocked with the RKE transmitter. This feature may be selected with or without the Sound Horn with LOCK feature selected. To make your selection, press and release the SELECT button until ON or OFF appears.

Headlamp Off Delay

When this feature is selected, the driver can choose to have the headlights remain on for 0, 30, 60, or 90 seconds when exiting the vehicle. To make your selection, press the SELECT button until 0, 30, 60, or 90 appears.

Headlamps With Wipers (Available with Auto Headlights Only)

When ON is selected, and the headlight switch is in the AUTO position, the headlights will turn on approximately 10 seconds after the wipers are turned on. The

headlights will also turn off when the wipers are turned off if they were turned on by this feature. To make your selection, press the SELECT button until ON or OFF appears.

NOTE: Turning the headlights on during the daytime causes the instrument panel lights to dim. To increase the brightness, refer to "Lights" in "Understanding The Features Of Your Vehicle."

Key Off Power Delay

When this feature is selected, the power window switches, radio, Uconnect™ phone (if equipped), and power outlets will remain active for up to 10 minutes after the ignition switch is turned to the LOCK position. Opening either front vehicle door will cancel this feature. To make your selection, press the SELECT button until OFF, 45 sec, 5 min, or 10 min appears.

Illumin. Approach

When this feature is selected, the headlights will activate and remain on for up to 90 seconds when the doors are unlocked with the remote keyless entry transmitter. To make your selection, press the SELECT button until "OFF," "30 sec," "60 sec," or "90 sec" appears.

Display Units In

The EVIC and odometer can be changed between English and Metric units of measure. To make your selection, press and release the SELECT button until "U.S." or "METRIC" appears.

Compass Variance

Refer to "Compass Display" for more information.

Calibrate Compass

Refer to "Compass Display" for more information.

SETTING THE ANALOG CLOCK

To set the analog clock, located at the top center of the instrument panel, press and hold the button in until the setting is correct. The clock will adjust slowly at first and then quicker the longer the button is held.

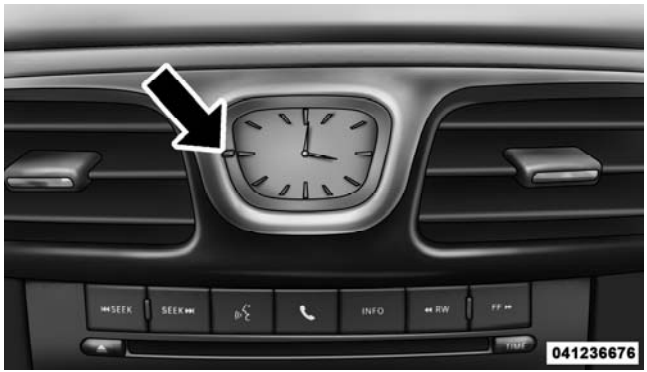

Setting The Analog Clock

MEDIA CENTER 730N/430/430N (RHR/RER/RBZ/RHB) CD/DVD/HDD/NAV — IF EQUIPPED

NOTE: The sales code is located on the lower right side of the unit's faceplate.

Refer to your Uconnect™ Multimedia RHR, RER, RBZ or RHB user's manual for detailed operating instructions.

Operating Instructions (Voice Command System) — If Equipped

Refer to "Voice Command" for further details.

Operating Instructions (Uconnect™ Phone) — If Equipped

Refer to "Uconnect™ Phone" for further details.

MEDIA CENTER 130 (SALES CODE RES)

NOTE: The radio sales code is located on the lower right side of the radio faceplate.

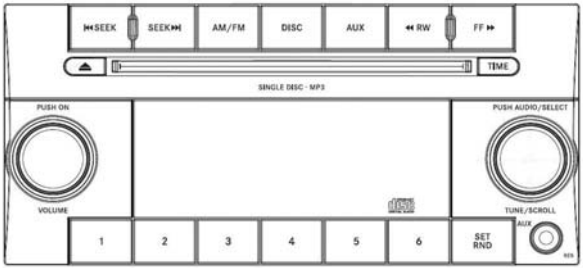

042305232

Media Center 130 (RES)

Operating Instructions — Radio Mode

NOTE: The ignition switch must be in the ON or ACC position to operate the radio.

Power Switch/Volume Control (Rotary)

Push the ON/VOLUME control knob to turn on the radio. Push the ON/VOLUME control knob a second time to turn off the radio.

Electronic Volume Control

The electronic volume control turns continuously (360 degrees) in either direction, without stopping. Turning the ON/VOLUME control knob to the right increases the volume, and to the left decreases it.

When the audio system is turned on, the sound will be set at the same volume level as last played.

SEEK Buttons

Press and release the SEEK buttons to search for the next listenable station in AM/FM mode. Press the right switch to seek up and the left switch to seek down. The radio will remain tuned to the new station until you make another selection. Holding either button will bypass stations without stopping, until you release it.

TIME Button

Press the TIME button to alternate display of the time and radio frequency.

Clock Setting Procedure

1. Press and hold the TIME button until the hours blink.
2. Adjust the hours by turning the right side TUNE/SCROLL control knob.
3. After adjusting the hours, press the right side TUNE/SCROLL control knob to set the minutes. The minutes will begin to blink.
4. Adjust the minutes using the right side TUNE/SCROLL control knob. Press the TUNE/SCROLL control knob to save time change.
5. To exit, press any button/knob, or wait five seconds.

RW/FF

Pressing the RW (Rewind) or FF (Fast Forward) buttons causes the tuner to search for the next frequency in the direction of the arrows. This feature operates in either AM or FM frequencies.

TUNE Control

Turn the rotary TUNE/SCROLL control knob clockwise to increase or counterclockwise to decrease the frequency.

Setting the Tone, Balance, and Fade

Push the rotary TUNE/SCROLL control knob and BASS will display. Turn the TUNE/SCROLL control knob to the right or left to increase or decrease the bass tones.

Push the rotary TUNE/SCROLL control knob a second time and MID will display. Turn the TUNE/SCROLL control knob to the right or left to increase or decrease the mid-range tones.

Push the rotary TUNE/SCROLL control knob a third time and TREBLE will display. Turn the TUNE/SCROLL control knob to the right or left to increase or decrease the treble tones.

Push the rotary TUNE/SCROLL control knob a fourth time and BALANCE will display. Turn the TUNE/SCROLL control knob to the right or left to adjust the sound level from the right or left side speakers.

Push the rotary TUNE/SCROLL control knob a fifth time and FADE will display. Turn the TUNE/SCROLL control knob to the left or right to adjust the sound level between the front and rear speakers.

Push the rotary TUNE/SCROLL control knob again to exit setting tone, balance, and fade.

AM/FM Button

Press the buttons to select either AM or FM mode.

SET/RND Button — To Set the Pushbutton Memory

When you are receiving a station that you wish to commit to pushbutton memory, press the SET/RND button. The symbol SET 1 will now show in the display window. Select the button (1 to 6) you wish to lock onto this station and press and release that button. If a button is not selected within five seconds after pressing the

SET/RND button, the station will continue to play but will not be stored into pushbutton memory.

You may add a second station to each pushbutton by repeating the above procedure with this exception: Press the SET/RND button twice and SET 2 will show in the display window. Each button can be set for SET 1 and SET 2 in both AM and FM. This allows a total of 12 AM and 12 FM stations to be stored into pushbutton memory. The stations stored in SET 2 memory can be selected by pressing the pushbutton twice.

Every time a preset button is used, a corresponding button number will display.

Buttons 1 - 6

These buttons tune the radio to the stations that you commit to pushbutton memory (12 AM and 12 FM stations).

DISC Button

Pressing the DISC button will allow you to switch from AM/FM modes to Disc modes.

Operation Instructions — CD MODE For CD And MP3 Audio Play

NOTE:

- The ignition switch must be in the ON or ACC position to operate the radio.
- This radio is capable of playing compact discs (CD), recordable compact discs (CD-R), rewritable compact discs (CD-RW), compact discs with MP3 tracks and multisession compact discs with CD and MP3 tracks.

Inserting Compact Disc(s)

Gently insert one CD into the CD player with the CD label facing up. The CD will automatically be pulled into the CD player and the CD icon will illuminate on the

radio display. If a CD does not go into the slot more than 1.0 in (2.5 cm), a disc may already be loaded and must be ejected before a new disc can be loaded.

If you insert a disc with the ignition ON and the radio ON, the unit will switch from radio to CD mode and begin to play when you insert the disc. The display will show the track number, and index time in minutes and seconds. Play will begin at the start of track 1.

CAUTION!

- **This CD player will accept 4–3/4 in (12 cm) discs only. The use of other sized discs may damage the CD player mechanism.**
- **Do not use adhesive labels. These labels can peel away and jam the player mechanism.**

(Continued)

CAUTION! (Continued)

- **The RES Media Center is a single CD player. Do not attempt to insert a second CD if one is already loaded.**

EJECT Button - Ejecting a CD

Press the EJECT button to eject the CD.

If you have ejected a disc and have not removed it within 10 seconds, it will be reloaded. If the CD is not removed, the radio will reinsert the CD but will not play it.

A disc can be ejected with the radio and ignition OFF.

NOTE: Ejecting with the ignition OFF is not allowed on convertible or soft-top models (if equipped).

SEEK Button

Press the right SEEK button for the next selection on the CD. Press the left SEEK button to return to the beginning of the current selection, or return to the beginning of the previous selection if the CD is within the first second of the current selection. Pressing and holding the SEEK button will allow faster scrolling through the tracks in CD and MP3 modes.

TIME Button

Press this button to change the display from a large CD playing time display to a small CD playing time display.

RW/FF

Press and hold the FF (Fast Forward) button and the CD player will begin to fast forward until FF is released, or RW or another CD button is pressed. The RW (Reverse) button works in a similar manner.

AM/FM Button

Press the button to select either AM or FM mode.

SET/RND Button (Random Play Button)

Press this button while the CD is playing to activate Random Play. This feature plays the selections on the compact disc in random order to provide an interesting change of pace.

Press the right SEEK button to move to the next randomly selected track.

Press the RND button a second time to stop Random Play.

Notes on Playing MP3 Files

The radio can play MP3 files; however, acceptable MP3 file recording media and formats are limited. When writing MP3 files, pay attention to the following restrictions.

Supported Media (Disc Types)

The MP3 file recording media supported by the radio are CDDA, CD-R, CD-RW, MP3, and CDDA+MP3.

Supported Medium Formats (File Systems)

The medium formats supported by the radio are ISO 9660 Level 1 and Level 2 and includes the Joliet extension. When reading discs recorded using formats other than ISO 9660 Level 1 and Level 2, the radio may fail to read files properly and may be unable to play the file normally. UDF and Apple HFS formats are not supported.

The radio uses the following limits for file systems:

- Maximum number of folder levels: 8
- Maximum number of files: 255
- Maximum number of folders. (The radio display of file names and folder names is limited. For large numbers of files and/or folders, the radio may be unable to display the file name and folder name, and will assign a number instead. With a maximum number of files, exceeding 20 folders will result in this display. With 200 files, exceeding 50 folders will result in this display.)
- Maximum number of characters in file/folder names:
  - Level 1: 12 (including a separator "." and a three-character extension)
  - Level 2: 31 (including a separator "." and a three-character extension)

Multisession disc formats are supported by the radio. Multisession discs may contain combinations of normal CD audio tracks and computer files (including MP3 files). Discs created with an option such as "keep disc open after writing" are most likely multisession discs. The use of multisession for CD audio or MP3 playback may result in longer disc loading times.

Supported MP3 File Formats

The radio will recognize only files with the *.MP3 extension as MP3 files. Non-MP3 files named with the *.MP3 extension may cause playback problems. The radio is designed to recognize the file as an invalid MP3 and will not play the file.

When using the MP3 encoder to compress audio data to an MP3 file, the bit rate and sampling frequencies in the following table are supported. In addition, variable bit rates (VBR) are also supported. The majority of MP3 files use a 44.1 kHz sampling rate and a 192, 160, 128, 96 or VBR bit rate.

MPEG Specification	Sampling Frequency (kHz)	Bit Rate (kbps)
MPEG-1 Audio Layer 3	48, 44.1, 32	320, 256, 224, 192, 160, 128, 112, 96, 80, 64, 56, 48, 40, 32
MPEG-2 Audio Layer 3	24, 22.05, 16	160, 128, 144, 112, 96, 80, 64, 56, 48, 40, 32, 24, 16, 8

ID3 Tag information for artist, song title, and album title are supported for version 1 ID3 tags. ID3 version 2 is not supported by the radios.

Playlist files are not supported. MP3 Pro files are not supported.

Playback of MP3 Files

When a medium containing MP3 data is loaded, the radio checks all files on the medium. If the medium contains a lot of folders or files, the radio will take more time to start playing the MP3 files.

Loading times for playback of MP3 files may be affected by the following:

- Media - CD-RW media may take longer to load than CD-R media
- Medium formats - Multisession discs may take longer to load than non-multisession discs
- Number of files and folders - Loading times will increase with more files and folders

To increase the speed of disc loading, it is recommended to use CD-R media and single-session discs. To create a single-session disc, enable the "Disc at Once" option before writing to the disc.

Operation Instructions - Auxiliary Mode

The auxiliary (AUX) jack is an audio input jack, which allows the user to plug in a portable device, such as an MP3 player, or cassette player, and utilize the vehicle's audio system to amplify the source and play through the vehicle speakers.

Pressing the DISC/AUX button will change the mode to auxiliary device if the AUX jack is connected.

NOTE: The AUX device must be turned on and the device's volume set to proper level. If the AUX audio is not loud enough, turn the device's volume up. If the AUX audio sounds distorted, turn the device's volume down.

TIME Button (Auxiliary Mode)

Press this button to change the display to time of day. The time of day will display for five seconds (when ignition is OFF).

MEDIA CENTER 130 WITH SATELLITE RADIO (SALES CODE RES+RSC)

NOTE: The radio sales code is located on the lower right side of the radio faceplate.

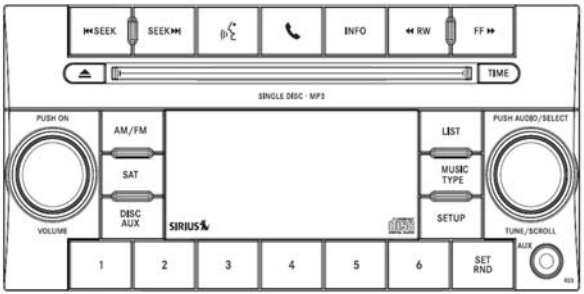

042340030

Media Center 130 (RES/RSC)

Operating Instructions — Radio Mode

NOTE: The ignition switch must be in the ON or ACC position to operate the radio.

Power Switch/Volume Control (Rotary)

Push the ON/VOLUME control knob to turn on the radio. Push the ON/VOLUME control knob a second time to turn off the radio.

Electronic Volume Control

The electronic volume control turns continuously (360 degrees) in either direction, without stopping. Turning the ON/VOLUME control knob to the right increases the volume, and to the left decreases it.

When the audio system is turned on, the sound will be set at the same volume level as last played.

SEEK Buttons

Press and release the SEEK buttons to search for the next listenable station in AM/FM mode. Press the right switch to seek up and the left switch to seek down. The radio will remain tuned to the new station until you make another selection. Holding either button will bypass stations without stopping, until you release it.

Voice Command System (Radio) — If Equipped

Refer to “Voice Command” in “Understanding The Features If Your Vehicle”.

Voice Command Button Uconnect™ Phone — If Equipped

Press this button to operate the Uconnect™ Phone feature (if equipped). Refer to “Uconnect™ Phone” in “Understanding The Features If Your Vehicle”.

If your vehicle is not equipped with or this feature is not available on your vehicle, a “Not Equipped With Uconnect Phone” message will display on the radio screen.

Phone Button Uconnect™ Phone — If Equipped

Press this button to operate the Uconnect™ Phone feature (if equipped). Refer to "Uconnect™ Phone" in "Understanding The Features If Your Vehicle".

If your vehicle is not equipped with or this feature is not available on your vehicle, a "Not Equipped With Uconnect Phone" message will display on the radio screen.

TIME Button

Press the TIME button to alternate display of the time and radio frequency.

Clock Setting Procedure

1. Press and hold the TIME button until the hours blink.
2. Adjust the hours by turning the right side TUNE/SCROLL control knob.
3. After adjusting the hours, press the right side TUNE/SCROLL control knob to set the minutes. The minutes will begin to blink.
4. Adjust the minutes using the right side TUNE/SCROLL control knob. Press the TUNE/SCROLL control knob to save time change.
5. To exit, press any button/knob or wait five seconds.

The clock can also be set by pressing the SETUP button. For vehicles equipped with satellite radio, press the SETUP button, use the TUNE/SCROLL control to select SET CLOCK, and then follow the above procedure, starting at Step 2. For vehicles not equipped with satellite radio, press the SETUP button and then follow the above procedure, starting at Step 2.

INFO Button

Press the INFO button for an RDS station (one with call letters displayed). The radio will return a Radio Text message broadcast from an FM station (FM mode only).

RW/FF

Pressing the RW (Rewind) or FF (Fast Forward) buttons causes the tuner to search for the next frequency in the direction of the arrows. This feature operates in either AM or FM frequencies.

TUNE Control

Turn the rotary TUNE/SCROLL control knob clockwise to increase or counterclockwise to decrease the frequency.

Setting the Tone, Balance, and Fade

Push the rotary TUNE/SCROLL control knob and BASS will display. Turn the TUNE/SCROLL control knob to the right or left to increase or decrease the bass tones.

Push the rotary TUNE/SCROLL control knob a second time and MID will display. Turn the TUNE/SCROLL control knob to the right or left to increase or decrease the mid-range tones.

Push the rotary TUNE/SCROLL control knob a third time and TREBLE will display. Turn the TUNE/SCROLL control knob to the right or left to increase or decrease the treble tones.

Push the rotary TUNE/SCROLL control knob a fourth time and BALANCE will display. Turn the TUNE/SCROLL control knob to the right or left to adjust the sound level from the right or left side speakers.

Push the rotary TUNE/SCROLL control knob a fifth time and FADE will display. Turn the TUNE/SCROLL control knob to the left or right to adjust the sound level between the front and rear speakers.

Push the rotary TUNE/SCROLL control knob again to exit setting tone, balance, and fade.

MUSIC TYPE Button

Pressing this button once will turn on the Music Type mode for five seconds. Pressing the MUSIC TYPE button or turning the TUNE/SCROLL control knob within five seconds will allow the program format type to be selected. Many radio stations do not currently broadcast Music Type information.

Toggle the MUSIC TYPE button to select the following format types:

Program Type	16-Digit Character Display
No program type or undefined	None
Adult Hits	Adlt Hit
Classical	Classicl
Classic Rock	Cls Rock
College	College
Country	Country
Foreign Language	Language
Information	Inform
Jazz	Jazz
News	News
Nostalgia	Nostalga
Oldies	Oldies
Personality	Persnlty
Public	Public
Rhythm and Blues	R & B
Religious Music	Rel Musc

Program Type	16-Digit Character Display
Religious Talk	Rel Talk
Rock	Rock
Soft	Soft
Soft Rock	Soft Rck
Soft Rhythm and Blues	Soft R&B
Sports	Sports
Talk	Talk
Top 40	Top 40
Weather	Weather

By pressing the SEEK button when the Music Type icon is displayed, the radio will be tuned to the next frequency station with the same selected Music Type name. The Music Type function only operates when in the FM mode.

If a preset button is activated while in the Music Type (Program Type) mode, the Music Type mode will be exited and the radio will tune to the preset station.

SETUP Button

Pressing the SETUP button allows you to select between the following items:

- **Set Clock** — Pressing the SELECT button will allow you to set the clock. Adjust the hours by turning the TUNE/SCROLL control knob. After adjusting the hours, press the TUNE/SCROLL control knob to set the minutes. The minutes will begin to blink. Adjust the minutes using the right side TUNE/SCROLL control knob. Press the TUNE/SCROLL control knob to save time change.

AM/FM Button

Press the button to select either AM or FM mode.

SET/RND Button — To Set the Pushbutton Memory

When you are receiving a station that you wish to commit to pushbutton memory, press the SET/RND button. The symbol SET 1 will now show in the display window. Select the button (1–6) you wish to lock onto this station and press and release that button. If a button is not selected within five seconds after pressing the SET/RND button, the station will continue to play but will not be stored into pushbutton memory.

You may add a second station to each pushbutton by repeating the above procedure with this exception: Press the SET/RND button twice and SET 2 will show in the display window. Each button can be set for SET 1 and SET 2 in both AM and FM. This allows a total of 12 AM and 12 FM stations to be stored into pushbutton memory. The stations stored in SET 2 memory can be selected by pressing the pushbutton twice.

Every time a preset button is used, a corresponding button number will display.

Buttons 1 - 6

These buttons tune the radio to the stations that you commit to pushbutton memory (12 AM and 12 FM stations).

DISC/AUX Button

Pressing the DISC/AUX button will allow you to switch from AM/FM modes to DISC/AUX mode.

Operation Instructions — CD MODE for CD and MP3 Audio Play

NOTE:

- The ignition switch must be in the ON or ACC position to operate the radio.

- This radio is capable of playing compact discs (CD), recordable compact discs (CD-R), rewritable compact discs (CD-RW), compact discs with MP3 tracks and multisession compact discs with CD and MP3 tracks.

Inserting Compact Disc(s)

Gently insert one CD into the CD player with the CD label facing up. The CD will automatically be pulled into the CD player and the CD icon will illuminate on the radio display. If a CD does not go into the slot more than 1.0 in (2.5 cm), a disc may already be loaded and must be ejected before a new disc can be loaded.

If you insert a disc with the ignition ON and the radio ON, the unit will switch from radio to CD mode and begin to play when you insert the disc. The display will show the track number, and index time in minutes and seconds. Play will begin at the start of track 1.

CAUTION!

- **This CD player will accept 4–3/4 in (12 cm) discs only. The use of other sized discs may damage the CD player mechanism.**
- **Do not use adhesive labels. These labels can peel away and jam the player mechanism.**
- **The RES Media Center is a single CD player. Do not attempt to insert a second CD if one is already loaded.**

EJECT Button - Ejecting a CD

Press the EJECT button to eject the CD.

If you have ejected a disc and have not removed it within 10 seconds, it will be reloaded. If the CD is not removed, the radio will reinsert the CD but will not play it.

A disc can be ejected with the radio and ignition OFF.

NOTE: Ejecting with the ignition OFF is not allowed on convertible or soft-top models (if equipped).

SEEK Button

Press the right SEEK button for the next selection on the CD. Press the left SEEK button to return to the beginning of the current selection, or return to the beginning of the previous selection if the CD is within the first second of the current selection. Pressing and holding the SEEK button will allow faster scrolling through the tracks in CD and MP3 modes.

TIME Button

Press this button to change the display from a large CD playing time display to a small CD playing time display.

RW/FF

Press and hold FF (Fast Forward) and the CD player will begin to fast forward until FF is released or RW or another CD button is pressed. The RW (Reverse) button works in a similar manner.

AM/FM Button

Press the button to select either AM or FM mode.

SET/RND Button (Random Play Button)

Press this button while the CD is playing to activate Random Play. This feature plays the selections on the compact disc in random order to provide an interesting change of pace.

Press the right SEEK button to move to the next randomly selected track.

Press the SET/RND button a second time to stop Random Play.

Notes On Playing MP3 Files

The radio can play MP3 files; however, acceptable MP3 file recording media and formats are limited. When writing MP3 files, pay attention to the following restrictions.

Supported Media (Disc Types)

The MP3 file recording media supported by the radio are CDDA, CD-R, CD-RW, MP3, and CDDA+MP3.

Supported Medium Formats (File Systems)

The medium formats supported by the radio are ISO 9660 Level 1 and Level 2 and includes the Joliet extension. When reading discs recorded using formats other than ISO 9660 Level 1 and Level 2, the radio may fail to read files properly and may be unable to play the file normally. UDF and Apple HFS formats are not supported.

The radio uses the following limits for file systems:

- Maximum number of folder levels: 8
- Maximum number of files: 255
- Maximum number of folders. (The radio display of file names and folder names is limited. For large numbers of files and/or folders, the radio may be unable to display the file name and folder name, and will assign a number instead. With a maximum number of files, exceeding 20 folders will result in this display. With 200 files, exceeding 50 folders will result in this display.)
- Maximum number of characters in file/folder names:
  - Level 1: 12 (including a separator "." and a three-character extension)
  - Level 2: 31 (including a separator "." and a three-character extension)

Multisession disc formats are supported by the radio. Multisession discs may contain combinations of normal

CD audio tracks and computer files (including MP3 files). Discs created with an option such as "keep disc open after writing" are most likely multisession discs. The use of multisession for CD audio or MP3 playback may result in longer disc loading times.

Supported MP3 File Formats

The radio will recognize only files with the *.MP3 extension as MP3 files. Non-MP3 files named with the *.MP3 extension may cause playback problems. The radio is designed to recognize the file as an invalid MP3 and will not play the file.

When using the MP3 encoder to compress audio data to an MP3 file, the bit rate and sampling frequencies in the following table are supported. In addition, variable bit rates (VBR) are also supported. The majority of MP3 files use a 44.1 kHz sampling rate and a 192, 160, 128, 96 or VBR bit rates.

MPEG Specification	Sampling Frequency (kHz)	Bit Rate (kbps)
MPEG-1 Audio Layer 3	48, 44.1, 32	320, 256, 224, 192, 160, 128, 112, 96, 80, 64, 56, 48, 40, 32
MPEG-2 Audio Layer 3	24, 22.05, 16	160, 128, 144, 112, 96, 80, 64, 56, 48, 40, 32, 24, 16, 8

ID3 Tag information for artist, song title, and album title are supported for version 1 ID3 tags. ID3 version 2 is not supported by the radios.

Playlist files are not supported. MP3 Pro files are not supported.

Playback of MP3 Files

When a medium containing MP3 data is loaded, the radio checks all files on the medium. If the medium contains a lot of folders or files, the radio will take more time to start playing the MP3 files.

Loading times for playback of MP3 files may be affected by the following:

- Media - CD-RW media may take longer to load than CD-R media
- Medium formats - Multisession discs may take longer to load than non-multisession discs
- Number of files and folders - Loading times will increase with more files and folders

To increase the speed of disc loading, it is recommended to use CD-R media and single-session discs. To create a single-session disc, enable the "Disc at Once" option before writing to the disc.

LIST Button (CD Mode for MP3 Play)

Pressing the LIST button will bring up a list of all folders on the disc. Scrolling up or down the list is done by turning the TUNE/SCROLL control knob. Selecting a folder by pressing the TUNE/SCROLL control knob will begin playing the files contained in that folder (or the next folder in sequence if the selection does not contain playable files).

The folder list will time out after five seconds.

INFO Button (CD Mode for MP3 Play)

Pressing the INFO button repeatedly will scroll through the following TAG information: Song Title, Artist, File Name, and Folder Name (if available).

Press the INFO button once more to return to ″elapsed time″ priority mode.

Press and hold the INFO button for three seconds or more and the radio will display song titles for each file.

Press and hold the INFO button again for three seconds to return to ″elapsed time″ display.

Operation Instructions - Auxiliary Mode

The auxiliary (AUX) jack is an audio input jack which allows the user to plug in a portable device such as an MP3 player or cassette player and utilize the vehicle's audio system to amplify the source and play through the vehicle speakers.

Pressing the AUX button will change the mode to auxiliary device if the AUX jack is connected.

NOTE: The AUX device must be turned on and the device's volume set to the proper level. If the AUX audio is not loud enough, turn the device's volume up. If the AUX audio sounds distorted, turn the device's volume down.

TIME Button (Auxiliary Mode)

Press this button to change the display to time of day. The time of day will display for five seconds (when the ignition is OFF).

Uconnect™ Multimedia (Satellite Radio) — If Equipped

Satellite radio uses direct satellite-to-receiver broadcasting technology to provide clear digital sound, coast to coast. The subscription service provider is Sirius Satellite Radio. This service offers over 130 channels of music, sports, news, entertainment, and programming for children, directly from its satellites and broadcasting studios.

NOTE: Sirius service is not available in Hawaii and has limited coverage in Alaska.

System Activation

Sirius Satellite Radio service is pre-activated, and you may begin listening immediately to the one year of audio service that is included with the factory-installed satellite radio system in your vehicle. Sirius will supply a welcome kit that contains general information, including how to setup your on-line listening account. For further information, call the toll-free number 888-539-7474, or visit the Sirius web site at www.sirius.com, or at www-.siriuscanada.ca for Canadian residents.

Electronic Serial Number/Sirius Identification Number (ESN/SID)

Please have the following information available when calling:

1. The Electronic Serial Number/Sirius Identification Number (ESN/SID).
2. Your Vehicle Identification Number.

To access the ESN/SID, refer to the following steps:

ESN/SID Access

With the ignition switch in the ON/RUN or ACC position and the radio on, press the SETUP button and scroll using the TUNE/SCROLL control knob until Sirius ID is selected. Press the TUNE/SCROLL control knob and the Sirius ID number will display. The Sirius ID number display will time out in two minutes. Press any button on the radio to exit this screen.

Selecting Uconnect™ Multimedia (Satellite) Mode

Press the SAT button until "SAT" appears in the display. A CD may remain in the radio while in the Satellite radio mode.

Satellite Antenna

To ensure optimum reception, do not place items on the roof around the rooftop antenna location. Metal objects placed within the line of sight of the antenna will cause decreased performance. Larger luggage items such as bikes should be placed as far rearward as possible, within the loading design of the rack. Do not place items directly on or above the antenna.

Reception Quality

Satellite reception may be interrupted due to one of the following reasons:

- The vehicle is parked in an underground parking structure or under a physical obstacle.
- Dense tree coverage may interrupt reception in the form of short audio mutes.
- Driving under wide bridges or along tall buildings can cause intermittent reception.
- Placing objects over or too close to the antenna can cause signal blockage.

Operating Instructions - Uconnect™ Multimedia (Satellite) Mode

NOTE: The ignition switch must be in the ON/RUN or ACC position to operate the radio.

SEEK Buttons

Press and release the SEEK buttons to search for the next channel in Satellite mode. Press the right switch to seek up and the left switch to seek down. The radio will remain tuned to the new channel until you make another selection. Holding either button will bypass channels without stopping until you release it.

SCAN Button

Pressing the SCAN button causes the tuner to search for the next channel, pausing for eight seconds before continuing to the next. To stop the search, press the SCAN button a second time.

INFO Button

Pressing the INFO button will cycle the display information between Artist, Song Title, and Composer (if available). Also, pressing and holding the INFO button for an additional three seconds will make the radio display the Song Title all of the time (press and hold again to return to normal display).

RW/FF

Pressing the RW (Rewind) or FF (Fast Forward) buttons causes the tuner to search for the next channel in the direction of the arrows.

TUNE Control (Rotary)

Turn the rotary TUNE/SCROLL control knob clockwise to increase or counterclockwise to decrease the channel.

MUSIC TYPE Button

Pressing this button once will turn on the Music Type mode for five seconds. Pressing the MUSIC TYPE button or turning the TUNE/SCROLL control knob within five seconds will allow the program format type to be selected.

Toggle the MUSIC TYPE button again to select the music type.

By pressing the SEEK button when the Music Type function is active, the radio will be tuned to the next channel with the same selected Music Type name.

If a preset button is activated while in the Music Type (Program Type) mode, the Music Type mode will be exited and the radio will tune to the preset channel.

SETUP Button

Pressing the SETUP button allows you to select the following items:

- Display Sirius ID number — Press the AUDIO/ SELECT button to display the Sirius ID number. This number is used to activate, deactivate, or change the Sirius subscription.

SET Button – To Set the Pushbutton Memory

When you are receiving a channel that you wish to commit to pushbutton memory, press the SET button. The symbol SET 1 will now show in the display window. Select the button (1-6) you wish to lock onto this channel and press and release that button. If a button is not selected within five seconds after pressing the SET button, the channel will continue to play but will not be stored into pushbutton memory.

You may add a second channel to each pushbutton by repeating the above procedure with this exception: Press the SET button twice and SET 2 will show in the display window. Each button can be set for SET 1 and SET 2. This allows a total of 12 Satellite channels to be stored into pushbutton memory. The channels stored in SET 2 memory can be selected by pressing the pushbutton twice.

Every time a preset button is used, a corresponding button number will display.

Buttons 1 - 6

These buttons tune the radio to the channels that you commit to pushbutton memory (12 Satellite stations).

Operating Instructions - Uconnect™ Phone (If Equipped)

Refer to “Uconnect™ Phone” in “Understanding The Features Of Your Vehicle”.

iPod®/USB/MP3 CONTROL — IF EQUIPPED

NOTE: This section is for sales code RES and REQ/REL/RET radios only with Uconnect™. For sales code RBZ/RHB, RHR, RHP, RHW or RB2 touch-screen radio iPod®/USB/MP3 control feature, refer to the separate RBZ/RHB, RHR, RHP, RHW or RB2 User's Manual. iPod®/USB/MP3 control is available only if equipped as an option with these radios.

This feature allows an iPod® or external USB device to be plugged into the USB port, located in the center of the instrument panel below the climate controls.

iPod® control supports Mini, 4G, Photo, Nano, 5G iPod® and iPhone® devices. Some iPod® software versions may not fully support the iPod® control features. Please visit Apple's website for software updates.

NOTE:

- If the radio has a USB port, refer to the appropriate Uconnect™ Multimedia radio User's Manual for iPod® or external USB device support capability.
- Connecting an iPod® or consumer electronic audio device to the AUX port located in the radio faceplate, plays media, but does not use the iPod® /MP3 control feature to control the connected device.

Connecting The iPod® Or External USB Device

Use the connection cable to connect an iPod® or external USB device to the vehicle's USB connector port which is located in the center of the instrument panel below the climate controls.

USB Connector Port

Once the audio device is connected and synchronized to the vehicle's iPod®/USB/MP3 control system (iPod® or external USB device may take a few minutes to connect), the audio device starts charging and is ready for use by pressing radio switches, as described below.

NOTE: If the audio device battery is completely discharged, it may not communicate with the iPod®/USB/MP3 control system until a minimum charge is attained. Leaving the audio device connected to the iPod®/USB/MP3 control system may charge it to the required level.

Using This Feature

By using iPod cable or external USB device to connect to USB port:

- The audio device can be played on the vehicle's sound system, providing metadata (artist, track title, album, etc.) information on the radio display.
- The audio device can be controlled using the radio buttons to Play, Browse, and List the iPod® contents.
- The audio device battery charges when plugged into the USB/AUX connector (if supported by the specific audio device)

Controlling The iPod® Or External USB Device Using Radio Buttons

To get into the iPod®/USB/MP3 control mode and access a connected audio device, either press the "AUX" button on the radio faceplate or press the VR button and say "USB" or "Switch to USB". Once in the iPod®/USB/MP3 control mode, audio tracks (if available from audio device) start playing over the vehicle's audio system.

Play Mode

When switched to iPod®/USB/MP3 control mode, the iPod® or external USB device automatically starts Play mode. In Play mode, the following buttons on the radio faceplate may be used to control the iPod® or external USB device and display data:

- Use the TUNE control knob to select the next or previous track.
  - Turning it clockwise (forward) by one click, while playing a track, skips to the next track or press the VR button and say "Next Track".
  - Turning it counterclockwise (backward) by one click, will jump to the previous track in the list or press the VR button and say "Previous Track"
  - Jump backward in the current track by pressing and holding the << **RW** button. Holding the << **RW** button long enough will jump to the beginning of the current track.
- Jump forward in the current track by pressing and holding the **FF**>> button.
- A single press backward << **RW** or forward **FF**>> will jump backward or forward respectively, for five seconds.

- Use the << **SEEK** and **SEEK**>> buttons to jump to the previous or next track. Pressing the **SEEK**>> button during play mode will jump to the next track in the list, or press the VR button and say "Next or Previous Track".
- While a track is playing, press the **INFO** button to see the associated metadata (artist, track title, album, etc.) for that track. Pressing the **INFO** button again jumps to the next screen of data for that track. Once all screens have been viewed, the last **INFO** button press will go back to the play mode screen on the radio.
- Pressing the **REPEAT** button will change the audio device mode to repeat the current playing track or press the VR button and say "Repeat ON" or "Repeat Off".
- Press the **SCAN** button to use iPod®/USB/MP3 device scan mode, which will play the first 10 seconds of each track in the current list and then forward to the next song. To stop SCAN mode and start playing the desired track, when it is playing the track, press the **SCAN** button again. During Scan mode, pressing the << **SEEK** and **SEEK**>> buttons will select the previous and next tracks.
- **RND** button (available on sales code RES radio only): Pressing this button toggles between Shuffle ON and Shuffle OFF modes for the iPod® or external USB device, or press the VR button and say "Shuffle ON" or "Shuffle Off". If the **RND** icon is showing on the radio display, then the shuffle mode is ON.

List Or Browse Mode

During Play mode, pressing any of the buttons described below, will bring up List mode. List mode enables scrolling through the list of menus and tracks on the audio device.

- **TUNE** control knob: The **TUNE** control knob functions in a similar manner as the scroll wheel on the audio device or external USB device.
  - Turning it clockwise (forward) and counterclockwise (backward) scrolls through the lists, displaying the track detail on the radio display. Once the track to be played is highlighted on the radio display, press the **TUNE** control knob to select and start playing the track. Turning the **TUNE** control knob fast will scroll through the list faster. During fast scroll, a slight delay in updating the information on the radio display may be noticeable.
  - During all List modes, the iPod® displays all lists in "wrap-around" mode. So if the track is at the bottom of the list, just turn the wheel backward (counter-clockwise) to get to the track faster.
  - In List mode, the radio **PRESET** buttons are used as shortcuts to the following lists on the iPod® or external USB device.
    - Preset 1 – Playlists
    - Preset 2 – Artists
    - Preset 3 – Albums
    - Preset 4 – Genres
    - Preset 5 – Audiobooks
    - Preset 6 – Podcasts
    - Pressing a PRESET button will display the current list on the top line and the first item in that list on the second line.
    - To exit List mode without selecting a track, press the same **PRESET** button again to go back to **Play mode**.
- **LIST** button: The **LIST** button will display the top level menu of the iPod® or external USB device. Turn the **TUNE** control knob to list the top-menu item to be selected and press the **TUNE** control knob. This will display the next sub-menu list item on the audio device, then follow the same steps to go to the desired

track in that list. Not all iPod® or external USB device sub-menu levels are available on this system.

- **MUSIC TYPE** button: The **MUSIC TYPE** button is another shortcut button to the genre listing on your audio device.

CAUTION!

- **Leaving the iPod® or external USB device (or any supported device) anywhere in the vehicle in extreme heat or cold can alter the operation or damage the device. Follow the device manufacturer's guidelines.**
- **Placing items on the iPod® or external USB device, or connections to the iPod® or external USB device in the vehicle, can cause damage to the device and/or to the connectors.**

WARNING!

Do not plug in or remove the iPod® or external USB device while driving. Failure to follow this warning could result in an accident.

Bluetooth Streaming Audio (BTSA)

Music can be streamed from your cellular phone to the Uconnect™ phone system.

Controlling BTSA Using Radio Buttons

To get into the BTSA mode, press either "AUX" button on the radio or press the VR button and say "Bluetooth Streaming Audio".

Play Mode

When switched to BTSA mode, some audio devices can start playing music over the vehicle's audio system, but some devices require the music to be initiated on the device first, then it will get streamed to the Uconnect™ phone system. Seven devices can be paired to the Uconnect™ phone system, but just one can be selected and played.

Selecting Different Audio Device

1. Press PHONE button to begin.
2. After the "Ready" prompt and the following beep, say "Setup", then "Select Audio Devices".
3. Say the name of the audio device or ask the Uconnect™ phone system to list audio devices.

Next Track

Use the SEEK UP button, or press the VR button on the radio and say "Next Track" to jump to the next track music on your cellular phone.

Previous Track

Use the SEEK DOWN button, or press the VR button on the radio and say "Previous Track" to jump to the previous track music on your cellular phone.

Browse

Browsing is not available on a BTSA device. Only the current song that is playing will display info.

STEERING WHEEL AUDIO CONTROLS — IF EQUIPPED

045035585

Remote Sound System Controls (Back View Of Steering Wheel)

The remote sound system controls are located on the rear surface of the steering wheel, at the three and nine o'clock positions.

The right-hand rocker switch has a pushbutton in the center, and controls the volume and mode of the sound system. Pressing the top of the rocker switch will increase the volume. Pressing the bottom of the rocker switch will decrease the volume. Pressing the center button changes the operation of the radio from AM to FM, or to CD mode, depending on which radio is in the vehicle.

The left-hand rocker switch has a pushbutton in the center. The function of the left-hand switch is different, depending on which mode you are in.

The following describes the left-hand rocker switch operation in each mode.

Radio Operation

Pressing the top of the switch will SEEK up for the next listenable station, and pressing the bottom of the switch will SEEK down for the next listenable station.

The button located in the center of the left-hand switch will tune to the next preset station that you have programmed in the radio preset pushbutton.

CD Player

Pressing the top of the switch once will go to the next track on the CD. Pressing the bottom of the switch once will go to the beginning of the current track, or to the beginning of the previous track if it is within one second after the current track begins to play.

If you press the switch up or down twice it plays the second track; three times, it will play the third, etc.

The button in the center of the left-hand switch has no function in this mode.

CD/DVD DISC MAINTENANCE

To keep a CD/DVD in good condition, take the following precautions:

1. Handle the disc by its edge; avoid touching the surface.
2. If the disc is stained, clean the surface with a soft cloth, wiping from center to edge.
3. Do not apply paper or tape to the disc; avoid scratching the disc.
4. Do not use solvents such as benzene, thinner, cleaners, or anti-static sprays.
5. Store the disc in its case after playing.
6. Do not expose the disc to direct sunlight.
7. Do not store the disc where temperatures may become too high.

NOTE: If you experience difficulty in playing a particular disc, it may be damaged (i.e., scratched, reflective coating removed, a hair, moisture or dew on the disc) oversized, or have protection encoding. Try a known good disc before considering disc player service.

RADIO OPERATION AND MOBILE PHONES

Under certain conditions, the mobile phone being on in your vehicle can cause erratic or noisy performance from your radio. This condition may be lessened or eliminated by relocating the mobile phone antenna. This condition is not harmful to the radio. If your radio performance does not satisfactorily "clear" by the repositioning of the antenna, it is recommended that the radio volume be turned down or off during mobile phone operation when not using Uconnect™ (if equipped).

CLIMATE CONTROLS

The air conditioning and heating system is designed to make you comfortable in all types of weather.

Manual Heating And Air Conditioning

045607574

Manual Temperature Control

The Manual Temperature Controls consist of a series of outer rotary dials and inner push knobs.

Blower Control

045607577

Rotate this control to regulate the amount of air forced through the ventilation system in any mode. The blower speed increases as you move the control to the right from the "O" (OFF) position. There are four blower speeds.

NOTE: For vehicles equipped with Remote Start, the climate controls will not function during Remote Start operation if the blower control is left in the "O" (Off) position.

Temperature Control

045607540

Rotate this control to regulate the temperature of the air inside the passenger compartment. Rotating the dial left into the blue area of the scale indicates cooler temperatures, while rotating right into the red area indicates warmer temperatures.

NOTE: If your air conditioning performance seems lower than expected, check the front of the A/C condenser located in front of the radiator for an accumulation of dirt or insects. Clean with a gentle water spray from behind the radiator and through the condenser. Fabric front fascia protectors may reduce airflow to the condenser, reducing air conditioning performance.

Mode Control (Air Direction)

045607541

Rotate this control to choose from several patterns of air distribution. You can select either a primary mode as identified by the symbols on the control, or a blend of two of these modes. The closer the setting is to a particular symbol, the more air distribution you receive from that mode.

- *Panel*

Air is directed through the outlets in the instrument panel. These outlets can be adjusted to direct airflow.

NOTE: The center instrument panel outlets can be aimed so that they are directed toward the rear seat passengers for maximum airflow to the rear.

- *Bi-Level*

Air is directed through the panel and floor outlets.

NOTE: For all settings, except full cold or full hot, there is a difference in temperature between the upper and lower outlets. The warmer air flows to the floor outlets. This feature gives improved comfort during sunny but cool conditions.

- *Floor*

Air is directed through the floor outlets with a small amount flowing through the defrost and side window demist outlets.

- *Mix*

Air is directed through the floor, defrost, and side window demist outlets. This setting works best in cold or snowy conditions that require extra heat to the windshield. This setting is good for maintaining comfort while reducing moisture on the windshield.

- *Defrost*

Air is directed through the windshield and side window demist outlets. Use this mode with maximum blower and temperature settings for best windshield and side window defrosting.

NOTE: The air conditioning compressor operates in Mix, Defrost, or a blend of these modes, even if the Air Conditioning (A/C) button is not pressed. This dehumidifies the air to help dry the windshield. To improve fuel economy, use these modes only when necessary.

- *Recirculation Control*

Pressing the Recirculation Control button will temporarily put the system in recirculation mode. This can be used when outside conditions such as smoke, odors, dust, or high humidity are present. Activating recirculation will cause the LED in the control button to illuminate.

NOTE:

- Continuous use of the Recirculation mode may make the inside air stuffy and window fogging may occur. Extended use of this mode is not recommended.
- The use of the Recirculation mode in cold or damp weather will cause windows to fog on the inside, because of moisture buildup inside the vehicle. Select the outside air position for maximum defogging.
- The A/C will engage automatically to prevent fogging when the recirculation button is pressed and the mode control is set to panel or Bi-Level.
- Recirculated air is not allowed in Defrost modes. If the Recirculation button is pressed while in Defrost mode, the LED indicator will flash several times then go out. Recirculation will be disabled automatically when Defrost mode is selected.

- The A/C can be deselected manually without disturbing the mode control selection.
- When the ignition switch is turned to the LOCK position, the recirculation feature will be cancelled.

Air Conditioning Control

045607557

Press this button to engage the Air Conditioning. A light will illuminate when the Air Conditioning system is engaged. Rotating the dial left into the blue area of the scale indicates cooler temperatures, while rotating right into the red area indicates warmer temperatures.

NOTE: The air conditioning compressor will not engage until the engine has been running for about 10 seconds.

- *MAX A/C*

For maximum cooling use the A/C and recirculation buttons at the same time.

- *ECONOMY MODE*

If economy mode is desired, press the A/C button to turn OFF the indicator light and the A/C compressor. Then, move the temperature control to the desired temperature.

Automatic Temperature Control (ATC) — If Equipped

045607534

Automatic Temperature Control

Automatic Operation

The Automatic Temperature Control system automatically maintains the climate in the cabin of the vehicle at the comfort levels desired by the driver and passenger.

Operation of the system is quite simple.

1. Turn the Mode Control knob (on the right) and the Blower Control knob (on the left) to AUTO

NOTE: The AUTO position performs best for front seat occupants only.

2. Dial in the temperature you would like the system to maintain by rotating the Temperature Control knob. Once the comfort level is selected, the system will maintain that level automatically using the heating system. Should the desired comfort level require air conditioning, the system will automatically make the adjustment.

045607537

You will experience the greatest efficiency by simply allowing the system to function automatically. Selecting the "O" (OFF) position on the blower control stops the system completely and closes the outside air intake.

72°F (22°C) is the recommended setting for maximum comfort for the average person; however, this may vary.

NOTE:

- The temperature setting can be adjusted at anytime without affecting automatic operation.
- Pressing the Air Conditioning Control button while in AUTO mode will cause the LED in the control button to flash three times and then turn off. This indicates that the system is in AUTO mode and requesting the air conditioning is not necessary.
- If your air conditioning performance seems lower than expected, check the front of the A/C condenser located in front of the radiator for an accumulation of dirt or insects. Clean with a gentle water spray from behind the radiator and through the condenser. Fabric front fascia protectors may reduce airflow to the condenser, reducing air conditioning performance.

- While operating in AUTO, the system will not automatically sense the presence of fog, mist or ice on the windshield. The defrost mode must be manually selected to clear the windshield and side glass.

Blower Control

045607536

For full automatic operation or for automatic blower operation, turn the knob to the AUTO position. In manual mode there are seven blower speeds that can be individual selected. In off position the blower will shut off.

Manual Operation

This system offers a full complement of manual override features, which consist of Blower Preferred Automatic, Mode Preferred Automatic, or Blower and Mode Preferred Automatic. This means the operator can override the blower, the mode, or both. There is a manual blower range for times when the AUTO setting is not desired. The blower can be set to any fixed blower speed by rotating the Blower Control knob (on the left).

NOTE: Please read the Automatic Temperature Control Operation Chart that follows for details.

Automatic Temperature Control Operation		The system will…				
Operation	**How**	**Blower Control**	**Mode Control**	**Air Temperature Control**	**Air Recirculation Control**	**A/C Operation**
Full Automatic Operation	Set blower knob to Auto. Set mode knob to Auto. Set temperature knobs for comfort.	Automatic	Automatic	Automatic	Automatic but can be overridden at any time.	Automatic
Blower Preferred Automatic	Set blower knob to any desired airflow level other than Auto. Set mode knob to Auto. Set temperature knobs for comfort.	User selectable to any speed.	Automatic	Automatic	Automatic but can be overridden at any time.	Automatic
Mode Preferred Automatic	Set mode knob to any desired air delivery point other than Auto. Set blower knob to Auto. Set temperature knobs for comfort.	Automatic	User selectable to any air delivery point.	Automatic	User selectable outside or recirculated.	User selectable A/C on or off.
Blower and Mode Preferred Automatic	Set blower knob to any desired airflow level other than Auto. Set mode knob to any desired air delivery point other than Auto. Set temperature knobs for comfort.	User selectable to any speed.	User selectable to any air delivery point.	Automatic	User selectable outside or recirculated.	User selectable A/C on or off.

045669104

The operator can override the AUTO mode setting to change airflow distribution by rotating the Mode Control knob (on the right) to one of the following positions.

- *Panel*

Air is directed through the outlets in the instrument panel. These outlets can be adjusted to direct airflow.

NOTE: The center instrument panel outlets can be aimed so that they are directed toward the rear seat passengers for maximum airflow to the rear.

- *Bi-Level*

Air is directed through the panel and floor outlets.

NOTE: For all settings, except full cold or full hot, there is a difference in temperature between the upper and lower outlets. The warmer air flows to the floor outlets. This feature gives improved comfort during sunny but cool conditions.

- *Floor*

Air is directed through the floor outlets with a small amount flowing through the defrost and side window demist outlets.

- *Mix*

Air is directed through the floor, defrost, and side window demist outlets. This setting works best in cold or snowy conditions that require extra heat to the windshield. This setting is good for maintaining comfort while reducing moisture on the windshield.

- *Defrost*

Air is directed through the windshield and side window demist outlets. Use this mode with maximum blower and temperature settings for best windshield and side window defrosting.

- *Air Conditioner Control*

045607559

Press this button to turn on the air conditioning during manual operation only. When the air conditioning is turned on, cool dehumidified air will flow through the outlets selected with the Mode control dial. Press this button a second time to turn OFF the air conditioning. An LED in the button illuminates when manual compressor operation is selected.

- *Recirculation Control*

The system will automatically control recirculation. However, pressing the Recirculation Control button will temporarily put the system in recirculation mode. This can be used when outside conditions such as smoke, odors, dust, or high humidity are present. Activating recirculation will cause the LED in the control button to illuminate.

NOTE:

- When the ignition switch is turned to the LOCK position, the recirculation feature will be cancelled.
- In cold weather, use of the Recirculation mode may lead to excessive window fogging. The Recirculation mode is not allowed in defrost, in order to improve window clearing. Recirculation will be disabled automatically if Defrost is selected.
- Extended use of recirculation may cause the windows to fog. If the interior of the windows begins to fog, press the Recirculation button to return to outside air. Some temp/humidity conditions will cause captured interior air to condense on windows and hamper visibility. For this reason, the system will not allow Recirculation to be selected while in defrost. Attempting to use the recirculation while in Defrost will cause the LED in the control button to blink and then turn off.

- Most of the time, when in Automatic Operation, you can temporarily put the system into Recirculation Mode by pressing the Recirculation button. However, under certain conditions, while in Automatic Mode, the system is blowing air out the defrost vents. When these conditions are present, and the Recirculation button is pressed, the indicator will flash and then turn off. This tells you that you are unable to go into Recirculation Mode at this time. If you would like the system to go into Recirculation Mode, you must first move the Mode knob to Panel, Mix and then press the Recirculation button. This feature reduces the possibility of window fogging.

Operating Tips

NOTE: Refer to the chart at the end of this section for suggested control settings for various weather conditions.

Summer Operation

The engine cooling system in air-conditioned vehicles must be protected with a high-quality antifreeze coolant to provide proper corrosion protection and to protect against engine overheating. A solution of 50% ethylene glycol antifreeze coolant and 50% water is recommended. Refer to “Maintenance Procedures” in “Maintaining Your Vehicle” for proper coolant selection.

Winter Operation

Use of the air Recirculation Mode during winter months is not recommended because it may cause window fogging.

Vacation Storage

Anytime you store your vehicle, or keep it out of service (i.e., vacation) for two weeks or more, run the air conditioning system at idle for about five minutes in the fresh air and high blower settings. This will ensure

adequate system lubrication to minimize the possibility of compressor damage when the system is started again.

Window Fogging

Interior fogging on the windshield can be quickly removed by turning the mode selector to Defrost. The Mix mode can be used to maintain a clear windshield and provide sufficient heating. If side window fogging becomes a problem, increase blower speed. Vehicle windows tend to fog on the inside in mild but rainy or humid weather.

NOTE: Recirculate without A/C should not be used for long periods as fogging may occur.

Side Window Demisters

A side window demister outlet is located at each end of the instrument panel. These non-adjustable outlets direct air toward the side windows when the system is in the FLOOR, MIX, or DEFROST mode. The air is directed at the area of the windows through which you view the outside mirrors.

Outside Air Intake

Make sure the air intake, located directly in front of the windshield, is free of obstructions such as leaves. Leaves collected in the air intake may reduce airflow, and if they enter the plenum, they could plug the water drains. In winter months, make sure the air intake is clear of ice, slush, and snow.

A/C Air Filter — If Equipped

The A/C Filter prevents most dust and pollen from entering the cabin. The filter acts on air coming from outside the vehicle and recirculated air within the passenger compartment. Refer to “Maintenance Procedures” in “Maintaining Your Vehicle” for A/C Air Filter service information or see your authorized dealer for service. Refer to “Maintenance Schedules” for filter service intervals.

Control Setting Suggestions for Various Weather Conditions

WEATHER	CONTROL SETTINGS
HOT WEATHER AND VEHICLE INTERIOR IS VERY HOT	Open the windows, start the vehicle, press the button to turn recirculate off. Set the Fan control to the high position (full clockwise). Press the A/C button. Set the Mode control at or between and . Set the temperature control to full cool. After the hot air is pushed from the vehicle press the button to turn recirculate on and roll up the windows. Once you are comfortable, press the button to turn recirculate off and adjust the temperature control for comfort.
WARM WEATHER	Press the button to turn recirculate off. If it's sunny, set the Mode control at or near and turn the air conditioning on. If it's cloudy or dark, set the Mode control at or near .
COOL OR COLD HUMID CONDITIONS	Press the button to turn recirculate off. If it's sunny, set the Mode control at or between and then turn the air conditioning on. If it's cloudy or dark, set the Mode control at or near and turn the air conditioning on. If the windows begin to fog, set Mode control at or between and .
COLD DRY CONDITIONS	Set the Mode control at or near . If it is sunny, you may want more upper air. In this case, set the Mode control at or between and . In very cold weather, if you need extra heat at the windshield, set the Mode control at or near the .

045606725

STARTING AND OPERATING

CONTENTS

■ STARTING PROCEDURES 303
- □ Normal Starting. 303
- □ Extreme Cold Weather (Below –20°F Or –29°C) 304
- □ After Starting 304

■ ENGINE BLOCK HEATER — IF EQUIPPED . . .304

■ AUTOMATIC TRANSMISSION 305
- □ Key Ignition Park Interlock. 306
- □ Brake/Transmission Shift Interlock System . . .307
- □ Four-Speed Automatic Transmission — If Equipped 307
- □ Gear Ranges 316
- □ Six-Speed Automatic Transmission — If Equipped 314
- □ Gear Ranges 316

■ AUTOSTICK® — IF EQUIPPED 322
- □ Operation 322

■ DRIVING ON SLIPPERY SURFACES 323
- □ Acceleration 323
- □ Traction 324

■ DRIVING THROUGH WATER 324
□ Flowing/Rising Water 325
□ Shallow Standing Water 325
■ POWER STEERING 327
□ Power Steering Fluid Check 327
■ PARKING BRAKE 328
■ ANTI-LOCK BRAKE SYSTEM (ABS) 331
■ ELECTRONIC BRAKE CONTROL SYSTEM 333
□ Anti-Lock Brake System (ABS) 334
□ Traction Control System (TCS) 334
□ Brake Assist System (BAS) 335
□ Electronic Stability Control (ESC) 336
□ ESC Activation/Malfunction Indicator Light And ESC OFF Indicator Light 338
■ TIRE SAFETY INFORMATION 340
□ Tire Markings 340
□ Tire Identification Number (TIN). 343
□ Tire Terminology And Definitions 344
□ Tire Loading And Tire Pressure 345
■ TIRES — GENERAL INFORMATION. 350
□ Tire Pressure 350
□ Tire Inflation Pressures 351
□ Radial Ply Tires 353
□ All Season Tires – If Equipped 353
□ Summer Or Three Season Tires – If Equipped. 354
□ Snow Tires 354

- Spare Tire Matching Original Equipped Tire And Wheel – If Equipped 355
- Compact Spare Tire – If Equipped 355
- Full Size Spare – If Equipped 356
- Limited-Use Spare – If Equipped 356
- Tire Spinning 357
- Tread Wear Indicators 358
- Life Of Tire 358
- Replacement Tires 359

■ TIRE CHAINS (TRACTION DEVICES) 360

■ TIRE ROTATION RECOMMENDATIONS 361

■ TIRE PRESSURE MONITOR SYSTEM (TPMS) . .362

- Base System 364
- Premium System – If Equipped. 366
- General Information 370

■ FUEL REQUIREMENTS 370

- Reformulated Gasoline 371
- Gasoline/Oxygenate Blends 371
- E-85 Usage In Non-Flex Fuel Vehicles 372
- MMT In Gasoline 373
- Materials Added To Fuel 373
- Fuel System Cautions. 373
- Carbon Monoxide Warnings 374

■ FLEXIBLE FUEL (3.6L ENGINE ONLY) — IF EQUIPPED 375

- E-85 General Information 375

- Ethanol Fuel (E-85) 376
- Fuel Requirements 376
- Selection Of Engine Oil For Flexible Fuel Vehicles (E-85) And Gasoline Vehicles 377
- Starting 378
- Cruising Range 378
- Replacement Parts 378
- Maintenance 378

■ ADDING FUEL 379
- Fuel Filler Cap (Gas Cap) 379
- Loose Filler Cap Message 381

■ VEHICLE LOADING 382
- Vehicle Certification Label 382
- Gross Vehicle Weight Rating (GVWR) 382
- Gross Axle Weight Rating (GAWR) 382
- Overloading 383
- Loading 383

■ TRAILER TOWING 384
- Common Towing Definitions 384

■ RECREATIONAL TOWING (BEHIND MOTORHOME, ETC.) 395
- Towing This Vehicle Behind Another Vehicle . .395
- Recreational Towing – All Models 395

STARTING PROCEDURES

Before starting your vehicle, adjust your seat, adjust the inside and outside mirrors, fasten your seat belt, and if present, instruct all other occupants to buckle their seat belts.

WARNING!

- **When leaving the vehicle, always remove the key fob from the ignition and lock your vehicle.**
- **Never leave children alone in a vehicle, or with access to an unlocked vehicle.**
- **Allowing children to be in a vehicle unattended is dangerous for a number of reasons. A child or others could be seriously or fatally injured. Children should be warned not to touch the parking brake, brake pedal or the shift lever.**

(Continued)

WARNING! (Continued)

- **Do not leave the key fob in or near the vehicle. A child could operate power windows, other controls, or move the vehicle.**

Normal Starting

The shift lever must be in the PARK or NEUTRAL position before you can start the engine. Apply the brakes before shifting to any driving gear.

NOTE: Normal starting of either a cold or a warm engine does not require pumping or pressing the accelerator pedal.

Tip Start

Do not press the accelerator. Turn the ignition key briefly to START position, and release it. The starter motor will continue to run, and it will disengage automatically when the engine is running. If the engine fails to start, the

starter will disengage automatically in 10 seconds. If this occurs, turn the ignition switch to the LOCK position, wait 10 to 15 seconds, then repeat the "Normal Starting" procedure.

Extreme Cold Weather (Below –20°F Or –29°C)

To ensure reliable starting at these temperatures, use of an externally powered electric engine block heater (available from your authorized dealer) is recommended.

After Starting

The idle speed is controlled automatically and it will decrease as the engine warms up.

ENGINE BLOCK HEATER — IF EQUIPPED

The engine block heater warms the engine, and permits quicker starts in cold weather. Connect the cord to a standard 110-115 Volt AC electrical outlet with a grounded, three-wire extension cord.

The engine block heater must be plugged in at least one hour to have an adequate warning effect on the engine.

The engine block heater cord is bundled under the hood between the headlight assembly and the Totally Integrated Power Module (Fuse Box) on the driver's side of the vehicle.

WARNING!

Remember to disconnect the engine block heater cord before driving. Damage to the 110-115 Volt electrical cord could cause electrocution.

AUTOMATIC TRANSMISSION

CAUTION!

Damage to the transmission may occur if the following precautions are not observed:

- **Shift into PARK only after the vehicle has come to a complete stop.**
- **Shift into or out of REVERSE only after the vehicle has come to a complete stop and the engine is at idle speed.**
- **Do not shift between PARK, REVERSE, NEUTRAL, or DRIVE when the engine is above idle speed.**
- **Before shifting into any gear, make sure your foot is firmly pressing on the brake pedal.**

NOTE: You MUST press and hold the brake pedal while shifting out of PARK.

WARNING!

- **It is dangerous to move the shift lever out of PARK or NEUTRAL if the engine speed is higher than idle speed. If your foot is not firmly pressing on the brake pedal, the vehicle could accelerate quickly forward or in reverse. You could lose control of the vehicle and hit someone or something. Only shift into gear when the engine is idling normally and when your foot is firmly pressing on the brake pedal.**

(Continued)

WARNING! (Continued)

- **Unintended movement of a vehicle could injure those in and near the vehicle. As with all vehicles, you should never exit a vehicle while the engine is running. Before exiting a vehicle, always apply the parking brake, shift the transmission into PARK, and remove the ignition key. Once the key is removed, the shift lever is locked in PARK, securing the vehicle against unwanted movement.**
- **When leaving the vehicle, always remove the ignition key and lock your vehicle.**

(Continued)

WARNING! (Continued)

- **Never leave children alone in a vehicle, or with access to an unlocked vehicle. Allowing children to be in a vehicle unattended is dangerous for a number of reasons. A child or others could be seriously or fatally injured. Children should be warned not to touch the parking brake, brake pedal or the shift lever.**
- **Do not leave the ignition key in or near the vehicle. A child could operate power windows, other controls, or move the vehicle.**

Key Ignition Park Interlock

This vehicle is equipped with a Key Ignition Park Interlock which requires the shift lever to be placed in PARK before the ignition switch can be turned to the LOCK/OFF position. The key can only be removed from the

ignition when the ignition is in the LOCK/OFF position, and once removed, the shift lever is locked in PARK.

NOTE: If a malfunction occurs, the system will trap the key in the ignition switch to warn you that this safety feature is inoperable. The engine can be started and stopped but the key cannot be removed until you obtain service.

Brake/Transmission Shift Interlock System

This vehicle is equipped with a Brake Transmission Shift Interlock (BTSI) that holds the shift lever in PARK unless the brakes are applied. To move the shift lever out of PARK, the ignition switch must be turned to the ON/RUN position (engine running or not) and the brake pedal must be pressed.

Four-Speed Automatic Transmission — If Equipped

The shift lever position display (located in the instrument cluster) indicates the transmission gear range. You must press the brake pedal to move the shift lever out of PARK (refer to "Brake/Transmission Shift Interlock System" in this section). To drive, move the shift lever from PARK or NEUTRAL to the DRIVE position.

The electronically-controlled transmission provides a precise shift schedule. The transmission electronics are self-calibrating; therefore, the first few shifts on a new vehicle may be somewhat abrupt. This is a normal condition, and precision shifts will develop within a few hundred miles (kilometers).

Only shift from DRIVE to PARK or REVERSE when the accelerator pedal is released and the vehicle is stopped. Be sure to keep your foot on the brake pedal when moving the shift lever between these gears.

Gear Ranges

DO NOT race the engine when shifting from PARK or NEUTRAL into another gear range.

NOTE: After selecting any gear range, wait a moment to allow the selected gear to engage before accelerating. This is especially important when the engine is cold.

PARK

This range supplements the parking brake by locking the transmission. The engine can be started in this range. Never attempt to use PARK while the vehicle is in motion. Apply the parking brake when leaving the vehicle in this range.

When parking on a level surface, you may place the shift lever in PARK first, and then apply the parking brake.

When parking on a hill, apply the parking brake before placing the shift lever in PARK, otherwise the load on the transmission locking mechanism may make it difficult to move the shift lever out of PARK. As an added precaution, turn the front wheels toward the curb on a downhill grade and away from the curb on an uphill grade.

WARNING!

- **Never use the PARK position as a substitute for the parking brake. Always apply the parking brake fully when parked to guard against vehicle movement and possible injury or damage.**
- **Your vehicle could move and injure you and others if it is not completely in PARK. Check by trying to move the shift lever rearward (with the brake pedal released) after you have placed it in PARK. Make sure the transmission is in PARK before leaving the vehicle.**

(Continued)

WARNING! (Continued)

- It is dangerous to move the shift lever out of PARK or NEUTRAL if the engine speed is higher than idle speed. If your foot is not firmly pressing the brake pedal, the vehicle could accelerate quickly forward or in reverse. You could lose control of the vehicle and hit someone or something. Only shift into gear when the engine is idling normally and your foot is firmly pressing the brake pedal.
- Unintended movement of a vehicle could injure those in or near the vehicle. As with all vehicles, you should never exit a vehicle while the engine is running. Before exiting a vehicle, always apply the parking brake, shift the transmission into PARK, and remove the ignition key. Once the key is removed, the shift lever is locked in PARK, securing the vehicle against unwanted movement.

(Continued)

WARNING! (Continued)

- When leaving the vehicle, always remove the key fob from the ignition and lock your vehicle. Never leave children alone in a vehicle, or with access to an unlocked vehicle. Allowing children to be in a vehicle unattended is dangerous for a number of reasons. A child or others could be seriously or fatally injured. Children should be warned not to touch the parking brake, brake pedal or the shift lever.
- Do not leave the ignition key in or near the vehicle. A child could operate power windows, other controls, or move the vehicle.

CAUTION!

- **Before moving the shift lever out of PARK, you must turn the ignition switch from the LOCK/OFF position to the ON/RUN position, and also press the brake pedal. Otherwise, damage to the shift lever could result.**
- **DO NOT race the engine when shifting from PARK or NEUTRAL into another gear range, as this can damage the drivetrain.**

The following indicators should be used to ensure that you have engaged the shift lever into the PARK position:

- When shifting into PARK, firmly move the shift lever all the way forward and to the left until it stops and is fully seated.
- Look at the shift lever position display and verify that it indicates the PARK position.
- With brake pedal released, verify that the shift lever will not move out of PARK.

REVERSE

This range is for moving the vehicle backward. Shift into REVERSE only after the vehicle has come to a complete stop.

NEUTRAL

Use this range when the vehicle is standing for prolonged periods with the engine running. The engine may be started in this range. Apply the parking brake and shift the transmission into PARK if you must leave the vehicle.

WARNING!

Do not coast in NEUTRAL and never turn off the ignition to coast down a hill. These are unsafe

(Continued)

WARNING! (Continued)

practices that limit your response to changing traffic or road conditions. You might lose control of the vehicle and have a collision.

CAUTION!

Towing the vehicle, coasting, or driving for any other reason with the transmission in NEUTRAL can cause severe transmission damage. Refer to "Recreational Towing" in "Starting And Operating" and "Towing A Disabled Vehicle" in "What To Do In Emergencies" for further information.

DRIVE

This range should be used for most city and highway driving. It provides the smoothest upshifts and downshifts, and the best fuel economy. The transmission automatically upshifts through all forward gears. The DRIVE position provides optimum driving characteristics under all normal operating conditions.

When frequent transmission shifting occurs (such as when operating the vehicle under heavy loading conditions, in hilly terrain, traveling into strong head winds, or while towing heavy trailers), select the "3" range. Under these conditions, using the "3" range will improve performance and extend transmission life by reducing excessive shifting and heat buildup.

If the transmission temperature exceeds normal operating limits, the powertrain controller will modify the DRIVE and "3" range shift points. This is done to prevent transmission damage due to overheating.

During cold temperatures, transmission operation may be modified depending on engine and transmission temperature as well as vehicle speed. This feature improves warm up time of the engine and transmission to

achieve maximum efficiency. Engagement of the torque converter clutch is inhibited until the transmission fluid is warm (refer to the "Note" under "Torque Converter Clutch" in this section). During extremely cold temperatures (-16°F [-27°C] or below), operation may briefly be limited to second gear only. Normal operation will resume once the transmission temperature has risen to a suitable level.

DRIVE 3

This range eliminates shifts into fourth gear. The transmission will operate normally in first and second gear. Shifts into third may be delayed to provide second gear operation at higher speeds. Using the "3" range while operating the vehicle under heavy operating conditions will improve performance and extend transmission life by reducing excessive shifting and heat build-up. The "3" range should also be used when descending steep grades to avoid brake system distress.

LOW

Use this range for engine braking when descending very steep grades. In this range, the transmission will downshift for maximum engine braking, and upshifts will occur only to prevent engine overspeed.

Transmission Limp Home Mode

Transmission function is monitored electronically for abnormal conditions. If a condition is detected that could result in transmission damage, Transmission Limp Home Mode is activated. In this mode, the transmission remains in third gear regardless of which forward gear is selected. PARK, REVERSE, and NEUTRAL will continue to operate. The Malfunction Indicator Light (MIL) may be illuminated. Limp Home Mode allows the vehicle to be driven to an authorized dealer for service without damaging the transmission.

In the event of a momentary problem, the transmission can be reset to regain all forward gears by performing the following steps:

1. Stop the vehicle.
2. Shift the transmission into PARK.
3. Turn the ignition switch to the LOCK/ OFF position.
4. Wait approximately 10 seconds.
5. Restart the engine.
6. Shift into the desired gear range. If the problem is no longer detected, the transmission will return to normal operation.

NOTE: Even if the transmission can be reset, we recommend that you visit your authorized dealer at your earliest possible convenience. Your authorized dealer has diagnostic equipment to determine if the problem could recur.

If the transmission cannot be reset, authorized dealer service is required.

Overdrive Operation

The automatic transmission includes an electronically controlled Overdrive (fourth gear). The transmission will automatically shift into Overdrive if the following conditions are present:

- the shift lever is in the DRIVE position,
- the transmission fluid has reached an adequate temperature,
- the engine coolant has reached an adequate temperature,
- vehicle speed is sufficiently high, and
- the driver is not heavily pressing the accelerator.

Torque Converter Clutch

A feature designed to improve fuel economy has been included in the automatic transmission on your vehicle. A clutch within the torque converter engages automatically at calibrated speeds. This may result in a slightly different feeling or response during normal operation in the upper gears. When the vehicle speed drops or during some accelerations, the clutch automatically disengages.

NOTE: The torque converter clutch will not engage until the transmission fluid and engine coolant are warm [usually after 1 to 3 miles (2 to 5 km) of driving]. Because the engine speed is higher when the torque converter clutch is not engaged, it may seem as if the transmission is not shifting into Overdrive when cold. This is normal. Shifting between the DRIVE and 3 ranges, when the transmission is sufficiently warm, will demonstrate that the transmission is able to shift into and out of Overdrive.

Six-Speed Automatic Transmission — If Equipped

The shift lever position display (located in the instrument cluster) indicates the transmission gear range. You must press the brake pedal to move the shift lever out of PARK (refer to "Brake/Transmission Shift Interlock System" in this section). To drive, move the shift lever from PARK or NEUTRAL to the DRIVE position.

The electronically-controlled transmission provides a precise shift schedule. The transmission electronics are self-calibrating; therefore, the first few shifts on a new vehicle may be somewhat abrupt. This is a normal condition, and precision shifts will develop within a few hundred miles (kilometers).

Only shift from DRIVE to PARK or REVERSE when the accelerator pedal is released and the vehicle is stopped. Be sure to keep your foot on the brake pedal when moving the shift lever between these gears.

The transmission shift lever has PARK, REVERSE, NEUTRAL, DRIVE, and AutoStick® shift positions. Manual shifts can be made using the AutoStick® shift control (refer to "AutoStick®" in "Starting And Operating" for further information). Moving the shift lever to the left or right (-/+) while in the AutoStick® position (below the Drive position) will manually select the transmission gear, and will display the current gear in the instrument cluster as 6, 5, 4, 3, 2, 1.

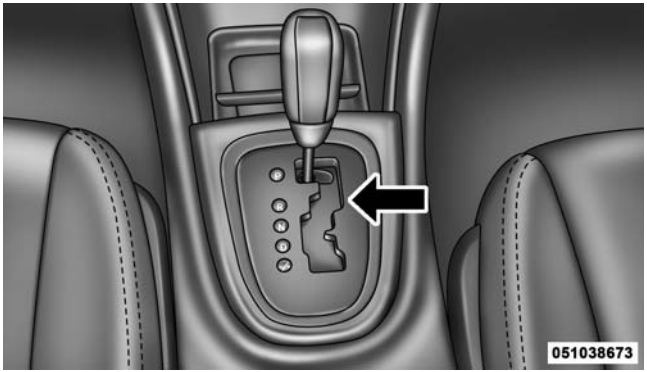

Shift Lever

Gear Ranges

DO NOT race the engine when shifting from PARK or NEUTRAL into another gear range.

NOTE: After selecting any gear range, wait a moment to allow the selected gear to engage before accelerating. This is especially important when the engine is cold.

PARK

This range supplements the parking brake by locking the transmission. The engine can be started in this range. Never attempt to use PARK while the vehicle is in motion. Apply the parking brake when leaving the vehicle in this range.

When parking on a level surface, you may place the shift lever in PARK first, and then apply the parking brake.

When parking on a hill, apply the parking brake before placing the shift lever in PARK, otherwise the load on the transmission locking mechanism may make it difficult to move the shift lever out of PARK. As an added precaution, turn the front wheels toward the curb on a downhill grade and away from the curb on an uphill grade.

WARNING!

- **Never use the PARK position as a substitute for the parking brake. Always apply the parking brake fully when parked to guard against vehicle movement and possible injury or damage.**
- **Your vehicle could move and injure you and others if it is not completely in PARK. Check by trying to move the shift lever rearward (with the brake pedal released) after you have placed it in PARK. Make sure the transmission is in PARK before leaving the vehicle.**

(Continued)

WARNING! (Continued)

- It is dangerous to move the shift lever out of PARK or NEUTRAL if the engine speed is higher than idle speed. If your foot is not firmly pressing the brake pedal, the vehicle could accelerate quickly forward or in reverse. You could lose control of the vehicle and hit someone or something. Only shift into gear when the engine is idling normally and your foot is firmly pressing the brake pedal.
- Unintended movement of a vehicle could injure those in or near the vehicle. As with all vehicles, you should never exit a vehicle while the engine is running. Before exiting a vehicle, always apply the parking brake, shift the transmission into PARK, and remove the ignition key. Once the key is removed, the shift lever is locked in PARK, securing the vehicle against unwanted movement.

(Continued)

WARNING! (Continued)

- When leaving the vehicle, always remove the key fob from the ignition and lock your vehicle. Never leave children alone in a vehicle, or with access to an unlocked vehicle. Allowing children to be in a vehicle unattended is dangerous for a number of reasons. A child or others could be seriously or fatally injured. Children should be warned not to touch the parking brake, brake pedal or the shift lever.
- Do not leave the ignition key in or near the vehicle. A child could operate power windows, other controls, or move the vehicle.

CAUTION!

- **Before moving the shift lever out of PARK, you must turn the ignition switch from the LOCK/OFF position to the ON/RUN position, and also press the brake pedal. Otherwise, damage to the shift lever could result.**
- **DO NOT race the engine when shifting from PARK or NEUTRAL into another gear range, as this can damage the drivetrain.**

The following indicators should be used to ensure that you have engaged the shift lever into the PARK position:

- When shifting into PARK, firmly move the shift lever all the way forward and to the left until it stops and is fully seated.
- Look at the shift lever position display and verify that it indicates the PARK position.
- With brake pedal released, verify that the shift lever will not move out of PARK.

REVERSE

This range is for moving the vehicle backward. Shift into REVERSE only after the vehicle has come to a complete stop.

NEUTRAL

Use this range when the vehicle is standing for prolonged periods with the engine running. The engine may be started in this range. Apply the parking brake and shift the transmission into PARK if you must leave the vehicle.

WARNING!

Do not coast in NEUTRAL and never turn off the ignition to coast down a hill. These are unsafe

(Continued)

WARNING! (Continued)

practices that limit your response to changing traffic or road conditions. You might lose control of the vehicle and have a collision.

CAUTION!

Towing the vehicle, coasting, or driving for any other reason with the transmission in NEUTRAL can result in severe transmission damage. Refer to "Recreational Towing" in "Starting And Operating" and "Towing A Disabled Vehicle" in What To Do In Emergencies" for further information.

DRIVE

This range should be used for most city and highway driving. It provides the smoothest upshifts and downshifts, and the best fuel economy. The transmission automatically upshifts through underdrive first, second, third, and fourth gears, direct fifth gear and overdrive sixth gear. The DRIVE position provides optimum driving characteristics under all normal operating conditions.

When frequent transmission shifting occurs (such as when operating the vehicle under heavy loading conditions, in hilly terrain, traveling into strong head winds, or while towing heavy trailers), use the AutoStick® shift control (refer to "AutoStick®" in this section) to select a lower gear. Under these conditions, using a lower gear will improve performance and extend transmission life by reducing excessive shifting and heat buildup.

During cold temperatures, transmission operation may be modified depending on engine and transmission temperature as well as vehicle speed. This feature improves warm up time of the engine and transmission to achieve maximum efficiency. Engagement of the torque converter clutch is inhibited until the transmission fluid

is warm (refer to the "Note" under "Torque Converter Clutch" in this section). During extremely cold temperatures (-16°F [-27°C] or below), operation may briefly be limited to third gear only. Normal operation will resume once the transmission temperature has risen to a suitable level.

Transmission Limp Home Mode

Transmission function is monitored electronically for abnormal conditions. If a condition is detected that could result in transmission damage, Transmission Limp Home Mode is activated. In this mode, the transmission remains in third gear regardless of which forward gear is selected. PARK, REVERSE, and NEUTRAL will continue to operate. The Malfunction Indicator Light (MIL) may be illuminated. Limp Home Mode allows the vehicle to be driven to an authorized dealer for service without damaging the transmission.

In the event of a momentary problem, the transmission can be reset to regain all forward gears by performing the following steps:

1. Stop the vehicle.
2. Shift the transmission into PARK.
3. Turn the ignition switch to the LOCK/ OFF position.
4. Wait approximately 10 seconds.
5. Restart the engine.
6. Shift into the desired gear range. If the problem is no longer detected, the transmission will return to normal operation.

NOTE: Even if the transmission can be reset, we recommend that you visit your authorized dealer at your earliest possible convenience. Your authorized dealer has diagnostic equipment to determine if the problem could recur.

If the transmission cannot be reset, authorized dealer service is required.

Overdrive Operation

The automatic transmission includes an electronically controlled Overdrive (sixth gear). The transmission will automatically shift into the Overdrive gear if the following conditions are present:

- the shift lever is in the DRIVE position,
- the transmission fluid has reached an adequate temperature,
- the engine coolant has reached an adequate temperature,
- vehicle speed is sufficiently high, and
- the driver is not heavily pressing the accelerator.

Torque Converter Clutch

A feature designed to improve fuel economy has been included in the automatic transmission on your vehicle. A clutch within the torque converter engages automatically at calibrated speeds. This may result in a slightly different feeling or response during normal operation in the upper gears. When the vehicle speed drops or during some accelerations, the clutch automatically disengages.

NOTE: The torque converter clutch will not engage until the transmission fluid and engine coolant are warm [usually after 1 to 3 miles (2 to 5 km) of driving]. Because the engine speed is higher when the torque converter clutch is not engaged, it may seem as if the transmission is not shifting into Overdrive when cold. This is normal. Using the AutoStick® shift control, when the transmission is sufficiently warm, will demonstrate that the transmission is able to shift into and out of Overdrive.

AUTOSTICK® — IF EQUIPPED

AutoStick® is a driver-interactive transmission feature providing manual shift control, giving you more control of the vehicle. AutoStick® allows you to maximize engine braking, eliminate undesirable upshifts and downshifts, and improve overall vehicle performance. This system can also provide you with more control during passing, city driving, cold slippery conditions, mountain driving, trailer towing, and many other situations.

Operation

When the shift lever is in the AutoStick® position (below the DRIVE position), it can be moved from side to side. This allows the driver to manually select the transmission gear being used. Moving the shift lever to the left (-) triggers a downshift and to the right (+) an upshift. The current gear will be displayed in the instrument cluster.

In AutoStick® mode, the transmission will shift up or down when the driver moves the shift lever to the right (+) or left (-), unless an engine lugging or overspeed condition would result. It will remain in the selected gear until another upshift or downshift is chosen, except as described below.

- The transmission will automatically downshift to first gear when coming to a stop. After a stop, the driver should manually upshift (+) the transmission as the vehicle is accelerated.
- You can start out, from a stop, in any gear except top gear. Tapping (+) (at a stop) will allow starting in second gear. Starting out in second gear is helpful in snowy or icy conditions.
- The transmission will automatically upshift when necessary to prevent engine over-speed.
- If a downshift would cause the engine to over-speed, that shift will not occur until it is safe for the engine

- Avoid using speed control when AutoStick® is engaged.
- Transmission shifting will be more noticeable when AutoStick® is engaged.
- If the system detects powertrain overheating, the transmission will revert to the automatic shift mode and remain in that mode until the powertrain cools off.
- If the system detects a problem, it will disable the AutoStick® mode and the transmission will return to the automatic mode until the problem is corrected.

To disengage AutoStick® mode, return the shift lever to the DRIVE position. You can shift in or out of the AutoStick® position at any time without taking your foot off the accelerator pedal.

WARNING!

Do not downshift for additional engine braking on a slippery surface. The drive wheels could lose their grip and the vehicle could skid, causing an accident or personal injury.

DRIVING ON SLIPPERY SURFACES

Acceleration

Rapid acceleration on snow covered, wet, or other slippery surfaces may cause the driving wheels to pull erratically to the right or left. This phenomenon occurs when there is a difference in the surface traction under the front (driving) wheels.

WARNING!

Rapid acceleration on slippery surfaces is dangerous. Unequal traction can cause sudden pulling of the front wheels. You could lose control of the vehicle and possibly have a collision. Accelerate slowly and carefully whenever there is likely to be poor traction (ice, snow, wet, mud, loose sand, etc.).

Traction

When driving on wet or slushy roads, it is possible for a wedge of water to build up between the tire and road surface. This is hydroplaning and may cause partial or complete loss of vehicle control and stopping ability. To reduce this possibility, the following precautions should be observed:

1. Slow down during rainstorms or when the roads are slushy.
2. Slow down if the road has standing water or puddles.
3. Replace the tires when tread wear indicators first become visible.
4. Keep tires properly inflated.
5. Maintain sufficient distance between your vehicle and the vehicle in front of you to avoid a collision in a sudden stop.

DRIVING THROUGH WATER

Driving through water more than a few inches/centimeters deep will require extra caution to ensure safety and prevent damage to your vehicle.

Flowing/Rising Water

WARNING!

Do not drive on or across a road or path where water is flowing and/or rising (as in storm run-off). Flowing water can wear away the road or path's surface and cause your vehicle to sink into deeper water. Furthermore, flowing and/or rising water can carry your vehicle away swiftly. Failure to follow this warning may result in injuries that are serious or fatal to you, your passengers, and others around you.

Shallow Standing Water

Although your vehicle is capable of driving through shallow standing water, consider the following Caution and Warning before doing so.

CAUTION!

- **Always check the depth of the standing water before driving through it. Never drive through standing water that is deeper than the bottom of the tire rims mounted on the vehicle.**
- **Determine the condition of the road or the path that is under water and if there are any obstacles in the way before driving through the standing water.**
- **Do not exceed 5 mph (8 km/h) when driving through standing water. This will minimize wave effects.**

(Continued)

CAUTION! (Continued)

- Driving through standing water may cause damage to your vehicle's drivetrain components. Always inspect your vehicle's fluids (i.e., engine oil, transmission, axle, etc.) for signs of contamination (i.e., fluid that is milky or foamy in appearance) after driving through standing water. Do not continue to operate the vehicle if any fluid appears contaminated, as this may result in further damage. Such damage is not covered by the New Vehicle Limited Warranty.
- Getting water inside your vehicle's engine can cause it to lock up and stall out, and cause serious internal damage to the engine. Such damage is not covered by the New Vehicle Limited Warranty.

WARNING!

- Driving through standing water limits your vehicle's traction capabilities. Do not exceed 5 mph (8 km/h) when driving through standing water.
- Driving through standing water limits your vehicle's braking capabilities, which increases stopping distances. Therefore, after driving through standing water, drive slowly and lightly press on the brake pedal several times to dry the brakes.
- Getting water inside your vehicle's engine can cause it to lock up and stall out, and leave you stranded.
- Failure to follow these warnings may result in injuries that are serious or fatal to you, your passengers, and others around you.

POWER STEERING

The standard power steering system will give you good vehicle response and increased ease of maneuverability in tight spaces. The system will provide mechanical steering capability if power assist is lost.

If for some reason the power assist is interrupted, it will still be possible to steer your vehicle. Under these conditions, you will observe a substantial increase in steering effort, especially at very low vehicle speeds and during parking maneuvers.

NOTE:

- Increased noise levels at the end of the steering wheel travel are considered normal and do not indicate that there is a problem with the power steering system.
- Upon initial start-up in cold weather, the power steering pump may make noise for a short amount of time. This is due to the cold, thick fluid in the steering system. This noise should be considered normal, and it does not in any way damage the steering system.

WARNING!

Continued operation with reduced power steering assist could pose a safety risk to yourself and others. Service should be obtained as soon as possible.

CAUTION!

Prolonged operation of the steering system at the end of the steering wheel travel will increase the steering fluid temperature and it should be avoided when possible. Damage to the power steering pump may occur.

Power Steering Fluid Check

Checking the power steering fluid level at a defined service interval is not required. The fluid should only be

checked if a leak is suspected, abnormal noises are apparent, and/or the system is not functioning as anticipated. Coordinate inspection efforts through an authorized dealer.

CAUTION!

Do not use chemical flushes in your power steering system as the chemicals can damage your power steering components. Such damage is not covered by the New Vehicle Limited Warranty.

WARNING!

Fluid level should be checked on a level surface and with the engine off to prevent injury from moving parts and to ensure accurate fluid level reading. Do not overfill. Use only manufacturer's recommended power steering fluid.

If necessary, add fluid to restore to the proper indicated level. With a clean cloth, wipe any spilled fluid from all surfaces. Refer to "Fluids, Lubricants, and Genuine Parts" in "Maintaining Your Vehicle" for further information.

PARKING BRAKE

Before leaving the vehicle, make sure that the parking brake is fully applied. Also, be certain to leave the transmission in PARK.

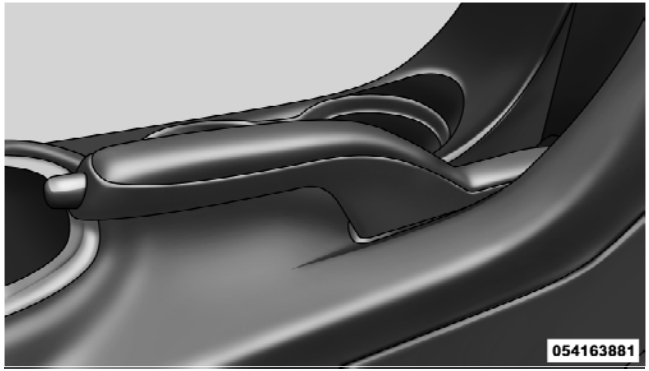

Parking Brake

The parking brake lever is located in the center console. To apply the parking brake, pull the lever up as firmly as possible. To release the parking brake, pull the lever up slightly, press the center button, then lower the lever completely.

When the parking brake is applied with the ignition switch ON, the "Brake Warning Light" in the instrument cluster will illuminate.

NOTE:

- When the parking brake is applied and the transmission is placed in gear, the "Brake Warning Light" will flash. If vehicle speed is detected, a chime will sound to alert the driver. Fully release the parking brake before attempting to move the vehicle.
- This light only shows that the parking brake is applied. It does not show the degree of brake application.

When parking on a hill, it is important to turn the front wheels toward the curb on a downhill grade and away from the curb on an uphill grade. Apply the parking brake before placing the shift lever in PARK, otherwise the load on the transmission locking mechanism may

make it difficult to move the shift lever out of PARK. The parking brake should always be applied whenever the driver is not in the vehicle.

WARNING!

- **Never use the PARK position as a substitute for the parking brake. Always apply the parking brake fully when parked to guard against vehicle movement and possible injury or damage.**
- **When leaving the vehicle, always remove the key fob from the ignition and lock your vehicle.**

(Continued)

WARNING! (Continued)

- **Never leave children alone in a vehicle, or with access to an unlocked vehicle. Allowing children to be in a vehicle unattended is dangerous for a number of reasons. A child or others could be seriously or fatally injured. Children should be warned not to touch the parking brake, brake pedal or the shift lever.**
- **Be sure the parking brake is fully disengaged before driving; failure to do so can lead to brake failure and a collision.**
- **Always fully apply the parking brake when leaving your vehicle or it may roll and cause damage or injury. Also, be certain to leave the transmission in PARK. Failure to do so may cause the vehicle to roll and cause damage or injury.**

CAUTION!

If the "Brake Warning Light" remains on with the parking brake released, a brake system malfunction is indicated. Have the brake system serviced by an authorized dealer immediately.

ANTI-LOCK BRAKE SYSTEM (ABS)

The Anti-Lock Brake System (ABS) provides increased vehicle stability and brake performance under most braking conditions. The system operates with a separate computer to modulate the hydraulic pressure to prevent wheel lock-up and avoid skidding on slippery surfaces.

WARNING!

- **Pumping of the anti-lock brakes will diminish their effectiveness and may lead to a collision. Pumping makes the stopping distance longer. Just press firmly on your brake pedal when you need to slow down or stop.**
- **The ABS cannot prevent the natural laws of physics from acting on the vehicle, nor can it increase braking or steering efficiency beyond that afforded by the condition of the vehicle brakes and tires or the traction afforded.**
- **The ABS cannot prevent collisions, including those resulting from excessive speed in turns, following another vehicle too closely, or hydroplaning.**

(Continued)

WARNING! (Continued)

- **The capabilities of an ABS-equipped vehicle must never be exploited in a reckless or dangerous manner, which could jeopardize the user's safety or the safety of others.**

The "Anti-Lock Brake Warning Light" monitors the Anti-Lock Brake System. The light will come on when the ignition switch is turned to the ON position and may stay on for as long as four seconds.

If the "Anti-Lock Brake Warning Light" remains on or comes on while driving, it indicates that the anti-lock portion of the brake system is not functioning and that service is required. However, the conventional brake system will continue to operate normally if the "Brake Warning Light" is not on.

If the "Anti-Lock Brake Warning Light" is on, the brake system should be serviced as soon as possible to restore the benefits of anti-lock brakes. If the "Anti-Lock Brake Warning Light" does not come on when the ignition switch is turned to the ON position, have the bulb repaired as soon as possible.

If both the "Brake Warning Light" and the "Anti-Lock Brake Warning Light" remain on, the Anti-Lock Brake (ABS) and Electronic Brake Force Distribution (EBD) Systems are not functioning. Immediate repair to the ABS system is required. See your authorized dealer.

When the vehicle is driven over 7 mph (11 km/h), you may hear a slight clicking sound as well as some related motor noises. These noises are the system performing its self-check cycle to ensure that the ABS system is working properly. This self check occurs each time the vehicle is started and accelerated past 7 mph (11 km/h).

ABS is activated during braking under certain road or stopping conditions. ABS-inducing conditions can include ice, snow, gravel, bumps, railroad tracks, loose debris, or panic stops.

You also may experience the following when the brake system goes into anti-lock:

- The ABS motor running (it may continue to run for a short time after the stop),
- the clicking sound of solenoid valves,
- brake pedal pulsations,
- and a slight drop or fall away of the brake pedal at the end of the stop.

These are all normal characteristics of ABS.

WARNING!

The Anti-Lock Brake System contains sophisticated electronic equipment that may be susceptible to interference caused by improperly installed or high output radio transmitting equipment. This interference can cause possible loss of anti-lock braking capability. Installation of such equipment should be performed by qualified professionals.

All vehicle wheels and tires must be the same size and type, and tires must be properly inflated to produce accurate signals for the computer.

ELECTRONIC BRAKE CONTROL SYSTEM

Your vehicle may be equipped with an optional advanced electronic brake control system that includes Anti-Lock Brake System (ABS), Traction Control System (TCS), Brake Assist System (BAS), and Electronic Stability

Control (ESC). All systems work together to enhance vehicle stability and control in various driving conditions and are commonly referred to as ESC.

Anti-Lock Brake System (ABS)

This system aids the driver in maintaining vehicle control under adverse braking conditions. The system controls hydraulic brake pressure to prevent wheel lock-up and help avoid skidding on slippery surfaces during braking. Refer to "Anti-Lock Brake System" in "Starting and Operating" for further information.

WARNING!

The ABS cannot prevent the natural laws of physics from acting on the vehicle, nor can it increase the traction afforded by prevailing road conditions. The

(Continued)

WARNING! (Continued)

ABS cannot prevent collisions, including those resulting from excessive speed in turns, driving on very slippery surfaces, or hydroplaning. The capabilities of an ABS-equipped vehicle must never be exploited in a reckless or dangerous manner which could jeopardize the user's safety or the safety of others.

Traction Control System (TCS)

This system monitors the amount of wheel spin of each of the driven wheels. If wheel spin is detected, brake pressure is applied to the slipping wheel(s) and engine power is reduced to provide enhanced acceleration and stability. A feature of the TCS system functions similar to a limited slip differential and controls the wheel spin across a driven axle. If one wheel on a driven axle is spinning faster than the other, the system will apply the

brake of the spinning wheel. This will allow more engine torque to be applied to the wheel that is not spinning. This feature remains active even if TCS and ESC are in the "Partial Off" mode. Refer to "Electronic Stability Control (ESC)" in this section of this manual.

Brake Assist System (BAS)

The BAS is designed to optimize the vehicle's braking capability during emergency braking maneuvers. The system detects an emergency braking situation by sensing the rate and amount of brake application and then applies optimum pressure to the brakes. This can help reduce braking distances. The BAS complements the Anti-Lock Brake System (ABS). Applying the brakes very quickly results in the best BAS assistance. To receive the benefit of the system, you must apply continuous braking pressure during the stopping sequence. Do not reduce brake pedal pressure unless braking is no longer desired. Once the brake pedal is released, the BAS is deactivated.

WARNING!

- **The BAS cannot prevent the natural laws of physics from acting on the vehicle, nor can it increase braking efficiency beyond that afforded by the condition of the vehicle brakes and tires or the traction afforded.**
- **The BAS cannot prevent collisions, including those resulting from excessive speed in turns, following another vehicle too closely, or hydroplaning.**
- **The capabilities of a BAS-equipped vehicle must never be exploited in a reckless or dangerous manner, which could jeopardize the user's safety or the safety of others.**

Electronic Stability Control (ESC)

This system enhances directional control and stability of the vehicle under various driving conditions. ESC corrects for over/under steering of the vehicle by applying the brake of the appropriate wheel to assist in counteracting the over/under steer condition. Engine power may also be reduced to help the vehicle maintain the desired path. ESC uses sensors in the vehicle to determine the vehicle path intended by the driver and compares it to the actual path of the vehicle. When the actual path does not match the intended path, ESC applies the brake of the appropriate wheel to assist in counteracting the oversteer or understeer condition

- Over-steer - when the vehicle is turning more than appropriate for the steering wheel position.
- Under-steer - when the vehicle is turning less than appropriate for the steering wheel position.

WARNING!

Electronic Stability Control (ESC) cannot prevent the natural laws of physics from acting on the vehicle, nor can it increase the traction afforded by prevailing road conditions. ESC cannot prevent accidents, including those resulting from excessive speed in turns, driving on very slippery surfaces, or hydroplaning. ESC also cannot prevent accidents resulting from loss of vehicle control due to inappropriate driver input for the conditions. Only a safe, attentive, and skillful driver can prevent accidents. The capabilities of an ESC equipped vehicle must never be exploited in a reckless or dangerous manner which could jeopardize the user's safety or the safety of others.

ESC Operating Modes

All ESC equipped vehicles can choose the following ESC operating modes:

ESC On

This is the normal operating mode for ESC. Whenever the vehicle is started the ESC system will be in this mode. This mode should be used for almost all driving situations. ESC should only be turned to "Partial Off" for specific reasons as noted below.

Partial ESC Mode

This mode is entered by momentarily pressing the "ESC Off" switch (located in the lower switch bank below the heater/air conditioning controls). When in "Partial Off" mode, the TCS portion of ESC, except for the limited slip feature described in the TCS section, has been disabled and the "ESC Activation/Malfunction Indicator Light" will be illuminated. All other stability features of ESC function normally, with the exception of engine power reduction. This mode is intended to be used if the vehicle is in deep snow, sand, or gravel conditions and more wheel spin than ESC would normally allow is required to gain traction.

ESC Off Switch

To turn ESC on again, momentarily press the "ESC Off" switch. This will restore the normal "ESC On" mode of operation.

WARNING!

In partial ESC mode, the engine power reduction feature of ESC is disabled. Therefore, enhanced vehicle stability offered by the ESC system is reduced.

NOTE: To improve the vehicle's traction when driving with snow chains, or starting off in deep snow, sand or gravel, it may be desirable to switch to the "Partial Off" mode by pressing the "ESC Off" switch. Once the situation requiring ESC to be switched to the "Partial Off" mode is overcome, turn ESC on again by momentarily pressing the "ESC Off" switch. This may be done while the vehicle is in motion.

ESC Activation/Malfunction Indicator Light And ESC OFF Indicator Light

The "ESC Activation/Malfunction Indicator Light" in the instrument cluster will come on when the ignition switch is turned to the ON position. It should go out with the engine running. If the "ESC Activation/Malfunction Indicator Light" comes on continuously with the engine running, a malfunction has been detected in the ESC system. If this light remains on after several ignition cycles, and the vehicle has been driven several miles (kilometers) at speeds greater than 30 mph (48 km/h), see your authorized dealer as soon as possible to have the problem diagnosed and corrected.

The "ESC Activation/Malfunction Indicator Light" (located in the instrument cluster) starts to flash as soon as the tires lose traction and the ESC system becomes active. The "ESC Activation/Malfunction Indicator Light" also

flashes when TCS is active. If the "ESC Activation/ Malfunction Indicator Light" begins to flash during acceleration, ease up on the accelerator and apply as little throttle as possible. Be sure to adapt your speed and driving to the prevailing road conditions.

NOTE:

- The "ESC Activation/Malfunction Indicator Light" and the "ESC OFF Indicator Light" come on momentarily each time the ignition switch is turned ON.
- Each time the ignition is turned ON, the ESC system will be ON even if it was turned off previously.
- The ESC system will make buzzing or clicking sounds when it is active. This is normal; the sounds will stop when ESC becomes inactive following the maneuver that caused the ESC activation.

The "ESC OFF Indicator Light" indicates the Electronic Stability Control (ESC) is off.

TIRE SAFETY INFORMATION

Tire Markings

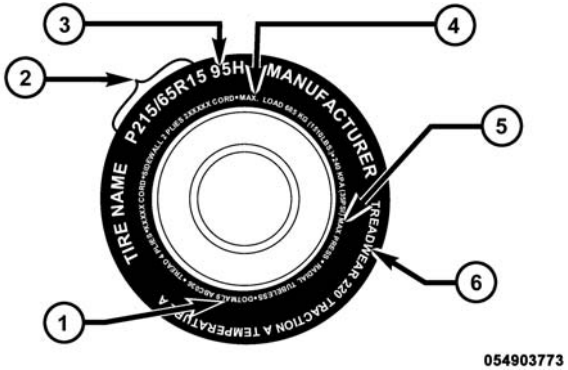

1 — U.S. DOT Safety Standards Code (TIN)	4 — Maximum Load
2 — Size Designation	5 — Maximum Pressure
3 — Service Description	6 — Treadwear, Traction and Temperature Grades

NOTE:

- P (Passenger) - Metric tire sizing is based on U.S. design standards. P-Metric tires have the letter “P” molded into the sidewall preceding the size designation. Example: P215/65R15 95H.
- European-Metric tire sizing is based on European design standards. Tires designed to this standard have the tire size molded into the sidewall beginning with the section width. The letter ″P″ is absent from this tire size designation. Example: 215/65R15 96H.
- LT (Light Truck) - Metric tire sizing is based on U.S. design standards. The size designation for LT-Metric tires is the same as for P-Metric tires except for the letters “LT” that are molded into the sidewall preceding the size designation. Example: LT235/85R16.
- Temporary spare tires are spares designed for temporary emergency use only. Temporary high pressure

compact spare tires have the letter "T" or "S" molded into the sidewall preceding the size designation. Example: T145/80D18 103M.

- High flotation tire sizing is based on U.S. design standards and it begins with the tire diameter molded into the sidewall. Example: 31x10.5 R15 LT.

Tire Sizing Chart

EXAMPLE:
Size Designation:
P = Passenger car tire size based on U.S. design standards **"....blank...."** = Passenger car tire based on European design standards **LT** = Light truck tire based on U.S. design standards **T or S** = Temporary spare tire **31** = Overall diameter in inches (in)
215 = Section width in millimeters (mm)
65 = Aspect ratio in percent (%) — Ratio of section height to section width of tire **10.5** = Section width in inches (in)
R = Construction code — "R" means radial construction — "D" means diagonal or bias construction

EXAMPLE:
15 = Rim diameter in inches (in)
Service Description:
95 = Load Index — A numerical code associated with the maximum load a tire can carry
H = Speed Symbol — A symbol indicating the range of speeds at which a tire can carry a load corresponding to its load index under certain operating conditions — The maximum speed corresponding to the speed symbol should only be achieved under specified operating conditions (i.e., tire pressure, vehicle loading, road conditions, and posted speed limits)
Load Identification:
"....blank...." = Absence of any text on the sidewall of the tire indicates a Standard Load (SL) tire
Extra Load (XL) = Extra load (or reinforced) tire
Light Load (LL) = Light load tire
C, D, E, F, G = Load range associated with the maximum load a tire can carry at a specified pressure
Maximum Load— Maximum load indicates the maximum load this tire is designed to carry
Maximum Pressure— Maximum pressure indicates the maximum permissible cold tire inflation pressure for this tire

Tire Identification Number (TIN)

The TIN may be found on one or both sides of the tire, however, the date code may only be on one side. Tires with white sidewalls will have the full TIN, including the date code, located on the white sidewall side of the tire. Look for the TIN on the outboard side of black sidewall tires as mounted on the vehicle. If the TIN is not found on the outboard side, then you will find it on the inboard side of the tire.

EXAMPLE:
DOT MA L9 ABCD 0301
DOT = Department of Transportation — This symbol certifies that the tire is in compliance with the U.S. Department of Transportation tire safety standards and is approved for highway use
MA = Code representing the tire manufacturing location (two digits)
L9 = Code representing the tire size (two digits)
ABCD = Code used by the tire manufacturer (one to four digits)
03 = Number representing the week in which the tire was manufactured (two digits) —03 means the 3rd week.
01 = Number representing the year in which the tire was manufactured (two digits) —01 means the year 2001 — Prior to July 2000, tire manufacturers were only required to have one number to represent the year in which the tire was manufactured. Example: 031 could represent the 3rd week of 1981 or 1991

Tire Terminology And Definitions

Term	Definition
B-Pillar	The vehicle B-Pillar is the structural member of the body located behind the front door.
Cold Tire Inflation Pressure	Cold tire inflation pressure is defined as the tire pressure after the vehicle has not been driven for at least 3 hours, or driven less than 1 mile (1.6 km) after sitting for a three hour period. Inflation pressure is measured in units of PSI (pounds per square inch) or kPa (kilopascals).
Maximum Inflation Pressure	The maximum inflation pressure is the maximum permissible cold tire inflation pressure for this tire. The maximum inflation pressure is molded into the sidewall.
Recommended Cold Tire Inflation Pressure	Vehicle manufacturer's recommended cold tire inflation pressure as shown on the tire placard.
Tire Placard	A paper label permanently attached to the vehicle describing the vehicle's loading capacity, the original equipment tire sizes and the recommended cold tire inflation pressures.

Tire Loading And Tire Pressure

Tire And Loading Information Placard Location

NOTE: The proper cold tire inflation pressure is listed on the driver's side B-Pillar or the rear edge of the driver's side door.

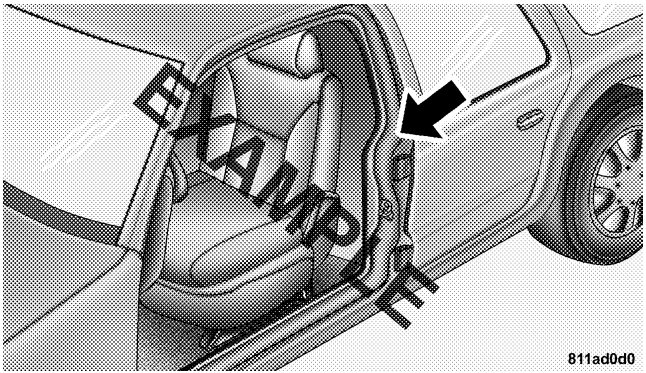

Tire Placard Location

Tire And Loading Information Placard

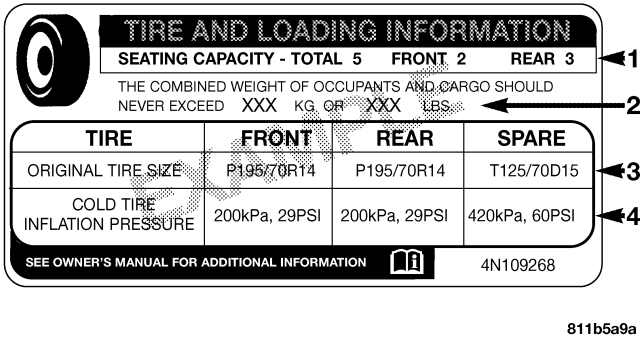

Tire and Loading Information Placard

This placard tells you important information about the:

1) number of people that can be carried in the vehicle
2) total weight your vehicle can carry
3) tire size designed for your vehicle
4) cold tire inflation pressures for the front, rear, and spare tires.

Loading

The vehicle maximum load on the tire must not exceed the load carrying capacity of the tire on your vehicle. You will not exceed the tire's load carrying capacity if you adhere to the loading conditions, tire size, and cold tire inflation pressures specified on the Tire and Loading Information placard and in the "Vehicle Loading" section of this manual.

NOTE: Under a maximum loaded vehicle condition, gross axle weight ratings (GAWRs) for the front and rear axles must not be exceeded. For further information on GAWRs, vehicle loading, and trailer towing, refer to "Vehicle Loading" in this section.

To determine the maximum loading conditions of your vehicle, locate the statement "The combined weight of occupants and cargo should never exceed XXX lbs or XXX kg" on the Tire and Loading Information placard. The combined weight of occupants, cargo/luggage and trailer tongue weight (if applicable) should never exceed the weight referenced here.

Steps For Determining Correct Load Limit

1. Locate the statement "The combined weight of occupants and cargo should never exceed XXX lbs or XXX kg" on your vehicle's placard.
2. Determine the combined weight of the driver and passengers that will be riding in your vehicle.
3. Subtract the combined weight of the driver and passengers from XXX lbs or XXX kg.
4. The resulting figure equals the available amount of cargo and luggage load capacity. For example, if "XXX" amount equals 1,400 lbs (635 kg) and there will be five 150 lb (68 kg) passengers in your vehicle, the amount of available cargo and luggage load capacity is 650 lbs (295 kg) (since 5 x 150 = 750, and 1400 – 750 = 650 lbs [295 kg]).
5. Determine the combined weight of luggage and cargo being loaded on the vehicle. That weight may not safely exceed the available cargo and luggage load capacity calculated in Step 4.
6. If your vehicle will be towing a trailer, load from your trailer will be transferred to your vehicle. Consult this manual to determine how this reduces the available cargo and luggage load capacity of your vehicle.

NOTE:

- The following table shows examples on how to calculate total load, cargo/luggage, and towing capacities of your vehicle with varying seating configurations and number and size of occupants. This table is for illustration purposes only and may not be accurate for the seating and load carry capacity of your vehicle.
- For the following example, the combined weight of occupants and cargo should never exceed 865 lbs (392 kg).

Occupants			Combined weight of occupants and cargo from Tire Placard	MINUS	Combined Occupant's weight	=	AVAILABLE Cargo/Luggage and Trailer Tongue Weight
TOTAL	FRONT	REAR					
EXAMPLE 1							
5	2	3	865 lbs	minus	Occupant 1: 200 lbs Occupant 2: 130 lbs Occupant 3: 160 lbs Occupant 4: 100 lbs Occupant 5: 80 lbs TOTAL WEIGHT: 670 lbs 670 lbs	=	195 lbs
EXAMPLE 2							
3	2	1	865 lbs	minus	Occupant 1: 210 lbs Occupant 2: 180 lbs Occupant 3: 150 lbs TOTAL WEIGHT: 540 lbs 540 lbs	=	325 lbs
EXAMPLE 3							
2	2	0	865 lbs	minus	Occupant 1: 200 lbs Occupant 2: 200 lbs TOTAL WEIGHT: 400 lbs 400 lbs	=	465 lbs

EXAMPLE

811a4d11

WARNING!

Overloading of your tires is dangerous. Overloading can cause tire failure, affect vehicle handling, and increase your stopping distance. Use tires of the recommended load capacity for your vehicle. Never overload them.

TIRES — GENERAL INFORMATION

Tire Pressure

Proper tire inflation pressure is essential to the safe and satisfactory operation of your vehicle. Three primary areas are affected by improper tire pressure:

Safety

WARNING!

- **Improperly inflated tires are dangerous and can cause collisions.**
- **Under-inflation increases tire flexing and can result in over-heating and tire failure.**
- **Over-inflation reduces a tire's ability to cushion shock. Objects on the road and chuckholes can cause damage that result in tire failure.**
- **Over-inflated or under-inflated tires can affect vehicle handling and can fail suddenly, resulting in loss of vehicle control.**
- **Unequal tire pressures can cause steering problems. You could lose control of your vehicle.**

(Continued)

WARNING! (Continued)

- **Unequal tire pressures from one side of the vehicle to the other can cause the vehicle to drift to the right or left.**
- **Always drive with each tire inflated to the recommended cold tire inflation pressure.**

Economy

Improper inflation pressures can cause uneven wear patterns to develop across the tire tread. These abnormal wear patterns will reduce tread life resulting in a need for earlier tire replacement. Under-inflation also increases tire rolling resistance resulting in higher fuel consumption.

Ride Comfort And Vehicle Stability

Proper tire inflation contributes to a comfortable ride. Over-inflation produces a jarring and uncomfortable ride. Both under-inflation and over-inflation affect the stability of the vehicle and can produce a feeling of sluggish response or over responsiveness in the steering.

Unequal tire pressures can cause erratic and unpredictable steering response.

Unequal tire pressure from side to side may cause the vehicle to drift left or right.

Tire Inflation Pressures

The proper cold tire inflation pressure is listed on the driver's side "B" Pillar or rear edge of the driver's side door.

The tire pressure should be checked and adjusted as well as inspected for signs of tire wear or visible damage at least once a month. Use a good quality pocket-type gauge to check tire pressure. Do not make a visual judgement when determining proper inflation. Radial tires may look properly inflated even when they are under-inflated.

CAUTION!

After inspecting or adjusting the tire pressure, always reinstall the valve stem cap. This will prevent moisture and dirt from entering the valve stem, which could damage the valve stem.

Inflation pressures specified on the placard are always "cold tire inflation pressure." Cold tire inflation pressure is defined as the tire pressure after the vehicle has not been driven for at least three hours, or driven less than 1 mile (1.6 km) after a three hour period. The cold tire inflation pressure must not exceed the maximum inflation pressure molded into the tire sidewall.

Check tire pressures more often if subject to a wide range of outdoor temperatures, as tire pressures vary with temperature changes.

Tire pressures change by approximately 1 psi (7 kPa) per 12°F (7°C) of air temperature change. Keep this in mind when checking tire pressure inside a garage, especially in the winter.

Example: If garage temperature = 68°F (20°C) and the outside temperature = 32°F (0°C) then the cold tire inflation pressure should be increased by 3 psi (21 kPa), which equals 1 psi (7 kPa) for every 12°F (7°C) for this outside temperature condition.

Tire pressure may increase from 2 to 6 psi (13 to 40 kPa) during operation. DO NOT reduce this normal pressure build up or your tire pressure will be too low.

Tire Pressures For High Speed Operation

The manufacturer advocates driving at safe speeds within posted speed limits. Where speed limits or conditions are such that the vehicle can be driven at high speeds, maintaining correct tire inflation pressure is very important. Increased tire pressure and reduced vehicle

loading may be required for high-speed vehicle operation. Refer to original equipment or an authorized tire dealer for recommended safe operating speeds, loading and cold tire inflation pressures.

WARNING!

High speed driving with your vehicle under maximum load is dangerous. The added strain on your tires could cause them to fail. You could have a serious collision. Do not drive a vehicle loaded to the maximum capacity at continuous speeds above 75 mph (120 km/h).

Radial Ply Tires

WARNING!

Combining radial ply tires with other types of tires on your vehicle will cause your vehicle to handle poorly. The instability could cause a collision. Always use radial ply tires in sets of four. Never combine them with other types of tires.

Cuts and punctures in radial tires are repairable only in the tread area because of sidewall flexing. Consult your authorized tire dealer for radial tire repairs.

All Season Tires – If Equipped

All Season tires provide traction for all seasons (spring, summer, fall and winter). Traction levels may vary between different all season tires. All season tires can be identified by the M+S, M&S, M/S or MS designation on

the tire sidewall. Use all season tires only in sets of four; failure to do so may adversely affect the safety and handling of your vehicle.

Summer Or Three Season Tires – If Equipped

Summer tires provide traction in both wet and dry conditions, and are not intended to be driven in snow or on ice. Summer tires will not contain the all season designation or mountain/snowflake symbol on the tire sidewall. Use summer tires only in sets of four; failure to do so may adversely affect the safety and handling of your vehicle.

Snow Tires

Some areas of the country require the use of snow tires during the winter. Snow tires can be identified by a mountain/snowflake symbol on the tire sidewall.

If you need snow tires, select tires equivalent in size and type to the original equipment tires. Use snow tires only in sets of four; failure to do so may adversely affect the safety and handling of your vehicle.

Snow tires generally have lower speed ratings than what was originally equipped with your vehicle and should not be operated at sustained speeds over 75 mph (120 km/h). For speeds above 75 mph (120 km/h) refer to original equipment or an authorized tire dealer for recommended safe operating speeds, loading and cold tire inflation pressures.

While studded tires improve performance on ice, skid and traction capability on wet or dry surfaces may be poorer than that of non-studded tires. Some states prohibit studded tires; therefore, local laws should be checked before using these tire types.

Spare Tire Matching Original Equipped Tire And Wheel – If Equipped

Your vehicle may be equipped with a spare tire and wheel equivalent in look and function to the original equipment tire and wheel found on the front or rear axle of your vehicle. This spare tire may be used in the tire rotation for your vehicle. If your vehicle has this option refer to an authorized tire dealer for the recommended tire rotation pattern.

If your vehicle is not equipped with an original equipment tire and wheel as a spare, a non-matching temporary emergency use spare may be equipped with your vehicle. Temporary use spares are engineered to be used only with your vehicle. Your vehicle may be equipped with one of the following types of non-matching temporary use spares; compact, full size, or limited-use. Do not install more than one non-matching temporary use spare tire/wheel on the vehicle at any given time.

CAUTION!

Because of the reduced ground clearance, do not take your vehicle through an automatic car wash with a compact, full size or limited-use temporary spare installed. Damage to the vehicle may result.

Compact Spare Tire – If Equipped

The compact spare is for temporary emergency use only. You can identify if your vehicle is equipped with a compact spare by looking at the spare tire description on the Tire and Loading Information Placard located on the driver's side door opening or on the sidewall of the tire. Compact spare tire descriptions begin with the letter "T" or "S" preceding the size designation. Example: T145/80D18 103M.

T, S = Temporary Spare Tire

Since this tire has limited tread life the original equipment tire should be repaired (or replaced) and reinstalled on your vehicle at the first opportunity.

Do not install a wheel cover or attempt to mount a conventional tire on the compact spare wheel, since the wheel is designed specifically for the compact spare tire. Do not install more than one compact spare tire and wheel on the vehicle at any given time.

WARNING!

Compact spares are for temporary emergency use only. With these spares, do not drive more than 50 mph (80 km/h). Temporary use spares have limited tread life. When the tread is worn to the tread wear indicators, the temporary use spare tire needs to be replaced. Be sure to follow the warnings, which apply to your spare. Failure to do so could result in spare tire failure and loss of vehicle control.

Full Size Spare – If Equipped

The full size spare is for temporary emergency use only. This tire may look like the original equipped tire on the front or rear axle of your vehicle, but it is not. This spare tire may have limited tread life. When the tread is worn to the tread wear indicators, the temporary use full size spare tire needs to be replaced. Since it is not the same as your original equipment tire, replace (or repair) the original equipment tire and reinstall on the vehicle at the first opportunity.

Limited-Use Spare – If Equipped

The limited-use spare tire is for temporary emergency use only. This tire is identified by a label located on the limited-use spare wheel. This label contains the driving limitations for this spare. This tire may look like the original equipped tire on the front or rear axle of your vehicle, but it is not. Installation of this limited-use spare tire affects vehicle handling. Since it is not the same as

your original equipment tire, replace (or repair) the original equipment tire and reinstall on the vehicle at the first opportunity.

WARNING!

Limited-use spares are for emergency use only. Installation of this limited-use spare tire affects vehicle handling. With this tire, do not drive more than the speed listed on the limit-use spare wheel. Keep inflated to the cold tire inflation pressure listed on your Tire and Loading Information Placard located on the driver's side door opening. Replace (or repair) the original equipment tire at the first opportunity and reinstall it on your vehicle. Failure to do so could result in loss of vehicle control.

Tire Spinning

When stuck in mud, sand, snow, or ice conditions, do not spin your vehicle's wheels above 30 mph (48 km/h) or for longer than 30 seconds continuously without stopping when you are stuck.

Refer to "Freeing A Stuck Vehicle" in "What To Do In Emergencies" for further information.

WARNING!

Fast spinning tires can be dangerous. Forces generated by excessive wheel speeds may cause tire damage or failure. A tire could explode and injure someone. Do not spin your vehicle's wheels faster than 30 mph (48 km/h) for more than 30 seconds continuously when you are stuck, and do not let anyone near a spinning wheel, no matter what the speed.

Tread Wear Indicators

Tread wear indicators are in the original equipment tires to help you in determining when your tires should be replaced.

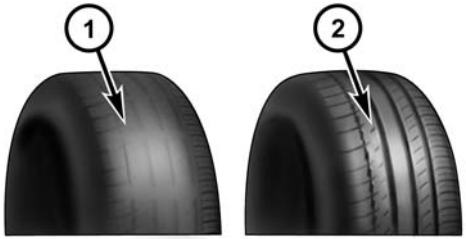

055007576

1 — Worn Tire
2 — New Tire

These indicators are molded into the bottom of the tread grooves. They will appear as bands when the tread depth becomes 1/16 in (2 mm). When the tread is worn to the tread wear indicators, the tire should be replaced.

Life Of Tire

The service life of a tire is dependent upon varying factors including, but not limited to:

- Driving style
- Tire pressure
- Distance driven
- Performance tires, tires with a speed rating of V or higher, and summer tires, typically have a reduced tread life. Rotation of these tires per the vehicle maintenance schedule is highly recommended.

WARNING!

Tires and the spare tire should be replaced after six years, regardless of the remaining tread. Failure to follow this warning can result in sudden tire failure. You could lose control and have a collision resulting in serious injury or death.

Keep dismounted tires in a cool, dry place with as little exposure to light as possible. Protect tires from contact with oil, grease, and gasoline.

Replacement Tires

The tires on your new vehicle provide a balance of many characteristics. They should be inspected regularly for wear and correct cold tire inflation pressure. The manufacturer strongly recommends that you use tires equivalent to the originals in size, quality and performance when replacement is needed. (Refer to the paragraph on "Tread Wear Indicators"). Refer to the "Tire and Loading Information" placard for the size designation of your tire. The Load Index and Speed Symbol for your tire will be found on the original equipment tire sidewall. See the Tire Sizing Chart example found in the Tire Safety Information section of this manual for more information relating to the Load Index and Speed Symbol of a tire.

It is recommended to replace the two front tires or two rear tires as a pair. Replacing just one tire can seriously affect your vehicle's handling. If you ever replace a wheel, make sure that the wheel's specifications match those of the original wheels.

It is recommended you contact your original equipment or an authorized tire dealer with any questions you may have on tire specifications or capability. Failure to use equivalent replacement tires may adversely affect the safety, handling, and ride of your vehicle.

WARNING!

- **Do not use a tire, wheel size or rating other than that specified for your vehicle. Some combinations of unapproved tires and wheels may change suspension dimensions and performance characteristics, resulting in changes to steering, handling, and braking of your vehicle. This can cause unpredictable handling and stress to steering and suspension components. You could lose control and have a collision resulting in serious injury or death. Use only the tire and wheel sizes with load ratings approved for your vehicle.**
- **Never use a tire with a smaller load index or capacity, other than what was originally equipped on your vehicle. Using a tire with a smaller load index could result in tire overloading and failure. You could lose control and have a collision.**

(Continued)

WARNING! (Continued)

- **Failure to equip your vehicle with tires having adequate speed capability can result in sudden tire failure and loss of vehicle control.**

CAUTION!

Replacing original tires with tires of a different size may result in false speedometer and odometer readings.

TIRE CHAINS (TRACTION DEVICES)

Due to limited clearance, tire chains or traction devices are not recommended.

CAUTION!

Damage to the vehicle may result if tire chains are used.

TIRE ROTATION RECOMMENDATIONS

The tires on the front and rear of your vehicle operate at different loads and perform different steering, driving, and braking functions. For these reasons, they wear at unequal rates.

These effects can be reduced by timely rotation of tires. The benefits of rotation are especially worthwhile with aggressive tread designs such as those on all season type tires. Rotation will increase tread life, help to maintain mud, snow and wet traction levels, and contribute to a smooth, quiet ride.

Refer to the "Maintenance Schedule" for the proper maintenance intervals. The reasons for any rapid or unusual wear should be corrected prior to rotation being performed.

The suggested rotation method is the "rearward cross" shown in the following diagram. This rotation pattern does not apply to some directional tires that must not be reversed.

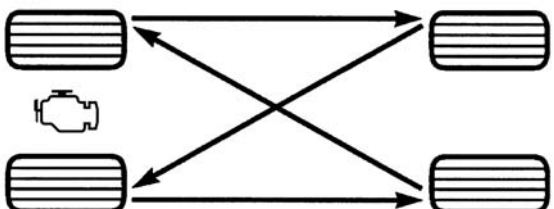

Tire Rotation

TIRE PRESSURE MONITOR SYSTEM (TPMS)

The Tire Pressure Monitor System (TPMS) will warn the driver of a low tire pressure based on the vehicle recommended cold placard pressure.

The tire pressure will vary with temperature by about 1 psi (7 kPa) for every 12°F (6.5°C). This means that when the outside temperature decreases, the tire pressure will decrease. Tire pressure should always be set based on cold inflation tire pressure. This is defined as the tire pressure after the vehicle has not been driven for at least three hours, or driven less than 1 mile (1.6 km) after a three hour period. The cold tire inflation pressure must not exceed the maximum inflation pressure molded into the tire sidewall. Refer to "Tires – General Information" in "Starting and Operating" for information on how to properly inflate the vehicle's tires. The tire pressure will also increase as the vehicle is driven - this is normal and there should be no adjustment for this increased pressure.

The TPM System will warn the driver of a low tire pressure if the tire pressure falls below the low-pressure warning limit for any reason, including low temperature effects and natural pressure loss through the tire.

The TPM System will continue to warn the driver of low tire pressure as long as the condition exists, and will not turn off until the tire pressure is at or above the recommended cold placard pressure. Once the low tire pressure warning (Tire Pressure Monitoring Telltale Light) illuminates, you must increase the tire pressure to the recommended cold placard pressure in order for the "Tire Pressure Monitoring Telltale Light" to turn off. The system will automatically update and the "Tire Pressure Monitoring Telltale Light" will turn off once the system receives the updated tire pressures. The vehicle may need

to be driven for up to 20 minutes above 15 mph (24 km/h) in order for the TPMS to receive this information.

For example, your vehicle may have a recommended cold (parked for more than three hours) placard pressure of 30 psi (207 kPa). If the ambient temperature is 68°F (20°C) and the measured tire pressure is 27 psi (186 kPa), a temperature drop to 20°F (-7°C) will decrease the tire pressure to approximately 23 psi (158 kPa). This tire pressure is sufficiently low enough to turn ON the "Tire Pressure Monitoring Telltale Light." Driving the vehicle may cause the tire pressure to rise to approximately 27 psi (186 kPa), but the "Tire Pressure Monitoring Telltale Light" will still be ON. In this situation, the "Tire Pressure Monitoring Telltale Light" will turn OFF only after the tires are inflated to the vehicle's recommended cold placard pressure value.

CAUTION!

- **The TPMS has been optimized for the original equipment tires and wheels. TPMS pressures and warning have been established for the tire size equipped on your vehicle. Undesirable system operation or sensor damage may result when using replacement equipment that is not of the same size, type, and/or style. Aftermarket wheels can cause sensor damage. Do not use aftermarket tire sealants or balance beads if your vehicle is equipped with a TPMS, as damage to the sensors may result.**
- **After inspecting or adjusting the tire pressure, always reinstall the valve stem cap. This will prevent moisture and dirt from entering the valve stem, which could damage the Tire Pressure Monitoring Sensor.**

NOTE:

- The TPMS is not intended to replace normal tire care and maintenance, or to provide warning of a tire failure or condition.
- The TPMS should not be used as a tire pressure gauge while adjusting your tire pressure.
- Driving on a significantly under-inflated tire causes the tire to overheat and can lead to tire failure. Under-inflation also reduces fuel efficiency and tire tread life, and may affect the vehicle's handling and stopping ability.
- The TPMS is not a substitute for proper tire maintenance, and it is the driver's responsibility to maintain correct tire pressure using an accurate tire pressure gauge, even if under-inflation has not reached the level to trigger illumination of the "Tire Pressure Monitoring Telltale Light."
- Seasonal temperature changes will affect tire pressure, and the TPMS will monitor the actual tire pressure in the tire.

Base System

The Tire Pressure Monitor System (TPMS) uses wireless technology with wheel rim mounted electronic sensors to monitor tire pressure levels. Sensors, mounted to each wheel as part of the valve stem, transmit tire pressure readings to the Receiver Module.

NOTE: It is particularly important for you to check the tire pressure in all of the tires on your vehicle monthly and to maintain the proper pressure.

The TPMS consists of the following components:

- Receiver Module
- Four Tire Pressure Monitoring Sensors
- Tire Pressure Monitoring Telltale Light

Tire Pressure Monitoring Low Pressure Warnings

The "Tire Pressure Monitoring Telltale Light" will illuminate in the instrument cluster, a "LOW TIRE" message will be displayed for a minimum of five seconds and a chime will sound when tire pressure is low in one or more of the four active road tires. Should this occur, you should stop as soon as possible, check the inflation pressure of each tire on your vehicle, and inflate each tire to the vehicle's recommended cold placard pressure value. Once the system receives the updated tire pressures, the system will automatically update and the "Tire Pressure Monitoring Telltale Light" and "LOW TIRE" message will turn off. The vehicle may need to be driven for up to 20 minutes above 15 mph (24 km/h) in order for the TPMS to receive this information.

Check TPMS Warning

The "Tire Pressure Monitoring Telltale Light" will flash on and off for 75 seconds and then remain on solid when a system fault is detected. The system fault will also sound a chime. If the ignition key is cycled, this sequence will repeat, providing the system fault still exists. The "Tire Pressure Monitoring Telltale Light" will turn off when the fault condition no longer exists. A system fault can occur due to any of the following:

1. Jamming due to electronic devices or driving next to facilities emitting the same Radio Frequencies as the TPM sensors.
2. Installing some form of aftermarket window tinting that affects radio wave signals.
3. Lots of snow or ice around the wheels or wheel housings.
4. Using tire chains on the vehicle.

5. Using wheels/tires not equipped with TPM sensors.

NOTE:

1. The compact spare tire (if equipped) does not have a tire pressure monitoring sensor. Therefore, the TPMS will not monitor the pressure in the compact spare tire.
2. If you install the compact spare tire in place of a road tire that has a pressure below the low-pressure warning limit, upon the next ignition key cycle, a chime will sound and the "Tire Pressure Monitoring Telltale Light" will turn ON and a "LOW TIRE" message will be displayed for a minimum of five seconds.
3. After driving the vehicle for up to 20 minutes above 15 mph (24 km/h), the "Tire Pressure Monitoring Telltale Light" will flash on and off for 75 seconds and then remain on solid.
4. For each subsequent ignition key cycle, a chime will sound and the "Tire Pressure Monitoring Telltale Light" will flash on and off for 75 seconds and then remain on solid.
5. Once you repair or replace the original road tire, and reinstall it on the vehicle in place of the compact spare, the TPMS will update automatically and the "Tire Pressure Monitoring Telltale Light" will turn OFF, as long no tire pressure is below the low-pressure warning limit in any of the four active road tires. The vehicle may need to be driven for up to 20 minutes above 15 mph (24 km/h) in order for the TPMS to receive this information.

Premium System – If Equipped

The Tire Pressure Monitor System (TPMS) uses wireless technology with wheel rim mounted electronic sensors to

monitor tire pressure levels. Sensors, mounted to each wheel as part of the valve stem, transmit tire pressure readings to the Receiver Module.

NOTE: It is particularly important for you to check the tire pressure in all of the tires on your vehicle monthly and to maintain the proper pressure.

The TPMS consists of the following components:

- Receiver Module
- Four Tire Pressure Monitoring Sensors
- Three Trigger Modules (mounted in three of the four wheel-wells)
- Various Tire Pressure Monitoring System Messages, which display in the Electronic Vehicle Information Center (EVIC)
- Tire Pressure Monitoring Telltale Light

Tire Pressure Monitoring Low Pressure Warnings

The "Tire Pressure Monitoring Telltale Light" will illuminate in the instrument cluster and a chime will sound when tire pressure is low in one or more of the four active road tires. In addition, the Electronic Vehicle Information Center (EVIC) will display a graphic showing the pressure values of each tire with the low tire pressure values flashing.

Should this occur, you should stop as soon as possible, and inflate all tires with low pressure (those flashing in the EVIC graphic) to the vehicle's recommended cold placard pressure value. Once the system receives the updated tire pressures, the system will automatically update, the graphic display in the EVIC will stop flashing, and the "Tire Pressure Monitoring Telltale Light"

will turn off. The vehicle may need to be driven for up to 20 minutes above 15 mph (24 km/h) in order for the TPMS to receive this information.

Check TPMS Warning

When a system fault is detected, a chime will sound and the "Tire Pressure Monitoring Telltale Light" will flash on and off for 75 seconds and then remain on solid. In addition, the EVIC will display a "CHECK TPM SYSTEM" message for a minimum of five seconds and then display dashes (- -) in place of the pressure value to indicate which sensor is not being received.

If the ignition key is cycled, this sequence will repeat, providing the system fault still exists. If the system fault no longer exists, the "Tire Pressure Monitoring Telltale Light" will no longer flash, and the "CHECK TPM SYSTEM" message will no longer display, and a pressure value will display in place of the dashes. A system fault can occur due to any of the following:

1. Jamming due to electronic devices or driving next to facilities emitting the same Radio Frequencies as the TPM sensors.
2. Installing some form of aftermarket window tinting that affects radio wave signals.
3. Lots of snow or ice around the wheels or wheel housings.
4. Using tire chains on the vehicle.
5. Using wheels/tires not equipped with TPM sensors.

The EVIC will also display a "CHECK TPM SYSTEM" message for a minimum of five seconds when a system fault related to an incorrect sensor location fault is detected. In this case, the "CHECK TPM SYSTEM" message is then followed with a graphic display with pressure values still shown. This indicates that the pressure values are still being received from the TPM sensors but they may not be located in the correct vehicle position.

The system still needs to be serviced as long as the "CHECK TPM SYSTEM" message is displayed.

NOTE:

1. The compact spare tire (if so equipped) does not have a tire pressure monitoring sensor. Therefore, the TPMS will not monitor the pressure in the compact spare tire.
2. If you install the compact spare tire in place of a road tire that has a pressure below the low-pressure warning limit, upon the next ignition key cycle, the "Tire Pressure Monitoring Telltale Light" will remain ON, a chime will sound, and the EVIC will still display a flashing pressure value in the graphic display.
3. After driving the vehicle for up to 20 minutes above 15 mph (24 km/h), the "Tire Pressure Monitoring Telltale Light" will flash on and off for 75 seconds and then remain on solid. In addition, the EVIC will display a "CHECK TPM SYSTEM" message for a minimum of five seconds and then display dashes (- -) in place of the pressure value.
4. For each subsequent ignition key cycle, a chime will sound, the "Tire Pressure Monitoring Telltale Light" will flash on and off for 75 seconds and then remain on solid, and the EVIC will display a "CHECK TPM SYSTEM" message for a minimum of five seconds and then display dashes (- -) in place of the pressure value.

5. Once you repair or replace the original road tire, and reinstall it on the vehicle in place of the compact spare, the TPMS will update automatically. In addition, the "Tire Pressure Monitoring Telltale Light" will turn OFF and the graphic in the EVIC will display a new pressure value instead of dashes (- -), as long no tire pressure is below the low-pressure warning limit in any of the four active road tires. The vehicle may need to be driven for up to 20 minutes above 15 mph (24 km/h) in order for the TPMS to receive this information.

General Information

This device complies with part 15 of the FCC rules and RSS 210 of Industry Canada. Operation is subject to the following conditions:

- This device may not cause harmful interference.
- This device must accept any interference received, including interference that may cause undesired operation.

The tire pressure sensors are covered under one of the following licenses:

United States	KR5S18002015B
Canada	267T-S180015B

FUEL REQUIREMENTS

This engine is designed to meet all emissions regulations and provide excellent fuel economy and performance when using high-quality unleaded "regular" gasoline having an octane rating of 87. The use of premium gasoline is not recommended, as it will not provide any benefit over regular gasoline in these engines.

Light spark knock at low engine speeds is not harmful to your engine. However, continued heavy spark knock at high speeds can cause damage and immediate service is required. Poor quality gasoline can cause problems such as hard starting, stalling, and hesitations. If you experience these symptoms, try another brand of gasoline before considering service for the vehicle.

Over 40 auto manufacturers worldwide have issued and endorsed consistent gasoline specifications (the Worldwide Fuel Charter, WWFC) which define fuel properties necessary to deliver enhanced emissions, performance, and durability for your vehicle. The manufacturer recommends the use of gasolines that meet the WWFC specifications if they are available.

Reformulated Gasoline

Many areas of the country require the use of cleaner burning gasoline referred to as "Reformulated Gasoline." Reformulated gasolines contain oxygenates and are specifically blended to reduce vehicle emissions and improve air quality.

The manufacturer supports the use of reformulated gasolines. Properly blended reformulated gasolines will provide excellent performance and durability of engine and fuel system components.

Gasoline/Oxygenate Blends

Some fuel suppliers blend unleaded gasoline with oxygenates such as Ethanol. Fuels blended with oxygenates may be used in your vehicle.

CAUTION!

DO NOT use gasoline containing Methanol or gasoline containing more than 10% Ethanol. Use of these

(Continued)

CAUTION! (Continued)

blends may result in starting and driveability problems, damage critical fuel system components, cause emissions to exceed the applicable standard, and/or cause the "Malfunction Indicator Light" to illuminate. Pump labels should clearly communicate if a fuel contains greater than 10% Ethanol.

Problems that result from using gasoline containing Methanol or gasoline containing more than 10% Ethanol are not the responsibility of the manufacturer and may not be covered under warranty.

E-85 Usage In Non-Flex Fuel Vehicles

Non-FFV vehicles are compatible with gasoline containing 10% ethanol (E10). Gasoline with higher ethanol content may void the vehicle's warranty.

If a Non-FFV vehicle is inadvertently fueled with E-85 fuel, the engine will have some or all of these symptoms:

- operate in a lean mode
- OBD II "Malfunction Indicator Light" on
- poor engine performance
- poor cold start and cold drivability
- increased risk for fuel system component corrosion

To fix a Non-FFV vehicle inadvertently fueled once with E-85 perform the following:

- drain the fuel tank (see your authorized dealer)
- change the engine oil and oil filter
- disconnect and reconnect the battery to reset the engine controller memory

More extensive repairs will be required for prolonged exposure to E-85 fuel.

MMT In Gasoline

MMT is a manganese-containing metallic additive that is blended into some gasoline to increase octane. Gasoline blended with MMT provides no performance advantage beyond gasoline of the same octane number without MMT. Gasoline blended with MMT reduces spark plug life and reduces emissions system performance in some vehicles. The manufacturer recommends that gasoline without MMT be used in your vehicle. The MMT content of gasoline may not be indicated on the gasoline pump, therefore, you should ask your gasoline retailer whether the gasoline contains MMT. It is even more important to look for gasoline without MMT in Canada, because MMT can be used at levels higher than those allowed in the United States. MMT is prohibited in Federal and California reformulated gasoline.

Materials Added To Fuel

All gasoline sold in the United States is required to contain effective detergent additives. Use of additional detergents or other additives is not needed under normal conditions and they would result in additional cost. Therefore, you should not have to add anything to the fuel.

Fuel System Cautions

CAUTION!

Follow these guidelines to maintain your vehicle's performance:

- **The use of leaded gas is prohibited by Federal law. Using leaded gasoline can impair engine performance and damage the emissions control system.**

(Continued)

CAUTION! (Continued)

- **An out-of-tune engine or certain fuel or ignition malfunctions can cause the catalytic converter to overheat. If you notice a pungent burning odor or some light smoke, your engine may be out of tune or malfunctioning and may require immediate service. Contact your authorized dealer for service assistance.**
- **The use of fuel additives, which are now being sold as octane enhancers, is not recommended. Most of these products contain high concentrations of methanol. Fuel system damage or vehicle performance problems resulting from the use of such fuels or additives is not the responsibility of the manufacturer.**

NOTE: Intentional tampering with the emissions control system can result in civil penalties being assessed against you.

Carbon Monoxide Warnings

WARNING!

Carbon monoxide (CO) in exhaust gases is deadly. Follow the precautions below to prevent carbon monoxide poisoning:

- **Do not inhale exhaust gases. They contain carbon monoxide, a colorless and odorless gas, which can kill. Never run the engine in a closed area, such as a garage, and never sit in a parked vehicle with the engine running for an extended period. If the vehicle is stopped in an open area with the engine running for more than a short period, adjust the ventilation system to force fresh, outside air into the vehicle.**

(Continued)

WARNING! (Continued)

- **Guard against carbon monoxide with proper maintenance. Have the exhaust system inspected every time the vehicle is raised. Have any abnormal conditions repaired promptly. Until repaired, drive with all side windows fully open.**

FLEXIBLE FUEL (3.6L ENGINE ONLY) — IF EQUIPPED

E-85 General Information

The information in this section is for Flexible Fuel vehicles only. These vehicles can be identified by a unique fuel filler door label that states **Ethanol (E-85) or Unleaded Gasoline Only.** This section only covers those subjects that are unique to these vehicles. Please refer to the other sections of this manual for information on features that are common between Flexible Fuel and gasoline-only powered vehicles.

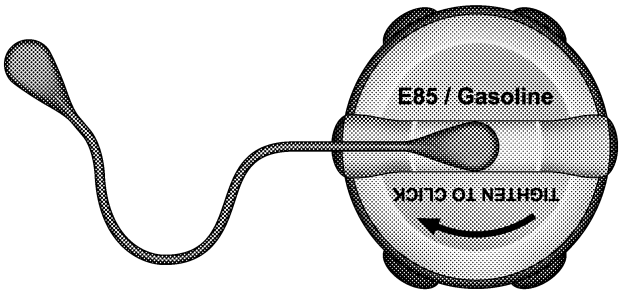

81ae46ab

E-85 Fuel Cap

CAUTION!

Only vehicles with the E-85 fuel filler door label can operate on E-85.

81ae46a9

E-85 Badge

Ethanol Fuel (E-85)

E-85 is a mixture of approximately 85% fuel ethanol and 15% unleaded gasoline.

WARNING!

Ethanol vapors are extremely flammable and could cause serious personal injury. Never have any smoking materials lit in or near the vehicle when removing the fuel filler tube cap (gas cap) or filling the tank. Do not use E-85 as a cleaning agent and never use it near an open flame.

Fuel Requirements

If your vehicle is E-85 compatible, it will operate on unleaded gasoline with an octane rating of 87, or E-85 fuel, or any mixture of these two fuels.

For best results, a refueling pattern that avoids alternating between E-85 and unleaded gasoline is recommended.

When you do switch fuel types it is recommended that:

- you do not add less than 5 gallons (19 Liters) when refueling
- you drive the vehicle immediately after refueling for at least 5 miles (8 km)

Observing these precautions will avoid possible hard starting and/or significant deterioration in driveability during warm up.

NOTE:

- Use seasonally adjusted E-85 fuel (ASTM D5798). With non-seasonally adjusted E-85 fuel, you may experience hard starting and rough idle following start up even if the above recommendations are followed, especially when the ambient temperature is below 32°F (0°C).
- Some additives used in regular gasoline are not fully compatible with E-85 and may form deposits in your engine. To eliminate driveability issues that may be caused by these deposits, a supplemental gasoline additive, such as MOPAR® Injector Cleanup or Techron may be used.

Selection Of Engine Oil For Flexible Fuel Vehicles (E-85) And Gasoline Vehicles

FFV vehicles operated on E-85 require specially formulated engine oils. These special requirements are included in MOPAR® engine oils, and in equivalent oils meeting Chrysler Specification MS-6395. The manufacturer only recommends engine oils that are API Certified and meet the requirements of Material Standard MS-6395. MS-6395 contains additional requirements, developed during extensive fleet testing, to provide additional protection to Chrysler Group LLC engines. Use MOPAR® or an equivalent oil meeting the specification MS-6395.

Starting

The characteristics of E-85 fuel make it unsuitable for use when ambient temperatures fall below 0°F (-18°C). In the range of 0°F (-18°C) to 32°F (0°C), you may experience an increase in the time it takes for your engine to start, and a deterioration in driveability (sags and/or hesitations) until the engine is fully warmed up.

NOTE: Use of the engine block heater (if equipped) is beneficial for E-85 startability when the ambient temperature is less than 32°F (0°C).

Cruising Range

Because E-85 fuel contains less energy per gallon/liter than gasoline, you will experience an increase in fuel consumption. You can expect your miles per gallon (mpg)/miles per liter and your driving range to decrease by about 30%, compared to gasoline operation.

Replacement Parts

Many components in your Flexible Fuel Vehicle (FFV) are designed to be compatible with ethanol. Always be sure that your vehicle is serviced with correct ethanol compatible parts.

CAUTION!

Replacing fuel system components with non-ethanol compatible components can damage your vehicle.

Maintenance

CAUTION!

Do not use ethanol mixture greater than 85% in your vehicle. It will cause difficulty in cold starting and may affect driveability.

ADDING FUEL

Fuel Filler Cap (Gas Cap)

The gas cap is behind the fuel filler door, on the left rear quarter panel of the vehicle. If the gas cap is lost or damaged, be sure the replacement cap is for use with this vehicle.

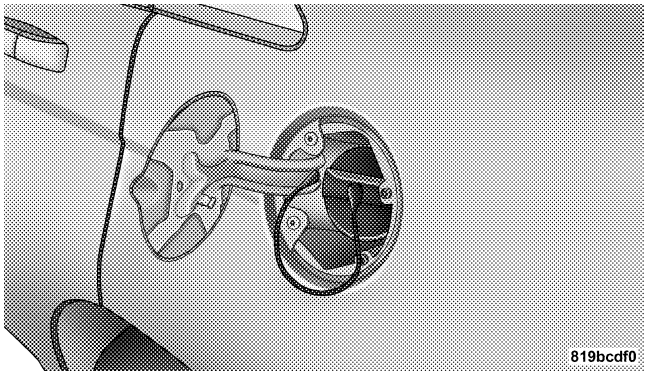

Fuel Filler Door

After removing the gas cap, place the gas cap tether cable over a hook on the inside of the fuel door. This keeps the gas cap suspended away from and protects the vehicle's surface.

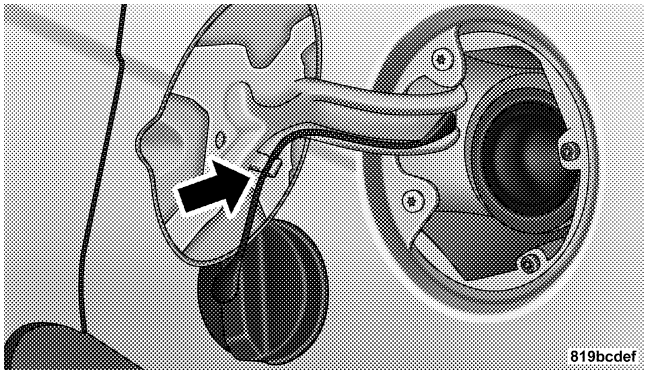

Tether Cable

NOTE: If the gas cap is lost or damaged, be sure the replacement cap is for use with this vehicle.

CAUTION!

- **Damage to the fuel system or emission control system could result from using an improper fuel tank filler tube cap (gas cap).**
- **A poorly fitting gas cap may cause the "Malfunction Indicator Light (MIL)" to turn on.**
- **To avoid fuel spillage and overfilling, do not "top off" the fuel tank after filling. When the fuel nozzle "clicks" or shuts off, the fuel tank is full.**

WARNING!

- **Never have any smoking materials lit in or near the vehicle when the gas cap is removed or the tank is being filled.**
- **Never add fuel when the engine is running. This is in violation of most state and federal fire regulations and doing so may cause the MIL to turn on.**
- **A fire may result if gasoline is pumped into a portable container that is inside of a vehicle. You could be burned. Always place gas containers on the ground while filling.**

NOTE:

- Tighten the gas cap until you hear a "clicking" sound. This is an indication that the gas cap is tightened properly. The MIL in the instrument cluster may turn on if the gas cap is not secured properly. Make sure that the gas cap is tightened each time the vehicle is refueled.
- When the fuel nozzle "clicks" or shuts off, the fuel tank is full.

Loose Filler Cap Message

If the vehicles diagnostic system determines that the fuel filler cap in loose, improperly installed, or damaged, a "gASCAP" message will be displayed in the instrument cluster. Tighten the gas cap until a "clicking" sound is heard. This is an indication that the gas cap is properly tightened. Press the trip odometer reset button to turn off the message. If the problem persists, the message will

appear the next time the vehicle is started. This might indicate a damaged cap. If the problem is detected twice in a row, the system will turn on the MIL. Resolving the problem will turn the MIL off.

VEHICLE LOADING

Vehicle Certification Label

Your vehicle has a Vehicle Certification Label affixed to the rear of the driver's door.

The label contains the following information:

- Name of manufacturer
- Month and year of manufacture
- Gross Vehicle Weight Rating (GVWR)
- Gross Axle Weight Rating (GAWR) front
- Gross Axle Weight Rating (GAWR) rear
- Vehicle Identification Number (VIN)
- Type of Vehicle
- Month Day and Hour of Manufacture (MDH)

The bar code allows a computer scanner to read the VIN.

Gross Vehicle Weight Rating (GVWR)

The GVWR is the total allowable weight of your vehicle. This includes driver, passengers, and cargo. The total load must be limited so that you do not exceed the GVWR.

Gross Axle Weight Rating (GAWR)

The GAWR is the maximum capacity of the front and rear axles. Distribute the load over the front and rear axles evenly. Make sure that you do not exceed either front or rear GAWR.

WARNING!

Because the front wheels steer the vehicle, it is important that you do not exceed the maximum front or rear GAWR. A dangerous driving condition can result if either rating is exceeded. You could lose control of the vehicle and have a collision.

Overloading

The load carrying components (axle, springs, tires, wheels, etc.) of your vehicle will provide satisfactory service as long as you do not exceed the GVWR and the front and rear GAWR.

The best way to figure out the total weight of your vehicle is to weigh it when it is fully loaded and ready for operation. Weigh it on a commercial scale to ensure that it is not over the GVWR.

Figure out the weight on the front and rear of the vehicle separately. It is important that you distribute the load evenly over the front and rear axles.

Overloading can cause potential safety hazards and shorten useful service life. Heavier axles or suspension components do not necessarily increase the vehicle's GVWR.

Loading

To load your vehicle properly, first figure out its empty weight, axle-by-axle and side-by-side. Store heavier items down low and be sure you distribute their weight as evenly as possible. Stow all loose items securely before driving. If weighing the loaded vehicle shows that you have exceeded either GAWR, but the total load is within the specified GVWR, you must redistribute the weight. Improper weight distribution can have an adverse effect on the way your vehicle steers and handles and the way the brakes operate.

TRAILER TOWING

In this section you will find safety tips and information on limits to the type of towing you can reasonably do with your vehicle. Before towing a trailer, carefully review this information to tow your load as efficiently and safely as possible.

To maintain warranty coverage, follow the requirements and recommendations in this manual concerning vehicles used for trailer towing.

Common Towing Definitions

The following trailer towing related definitions will assist you in understanding the following information:

Gross Vehicle Weight Rating (GVWR)

The GVWR is the total allowable weight of your vehicle. This includes driver, passengers, cargo and tongue weight. The total load must be limited so that you do not exceed the GVWR. Refer to "Vehicle Loading/Vehicle Certification Label" in "Starting and Operating" for further information.

Gross Trailer Weight (GTW)

The GTW is the weight of the trailer plus the weight of all cargo, consumables and equipment (permanent or temporary) loaded in or on the trailer in its "loaded and ready for operation" condition. The recommended way to measure GTW is to put your fully loaded trailer on a vehicle scale. The entire weight of the trailer must be supported by the scale.

Gross Combination Weight Rating (GCWR)

The GCWR is the total permissible weight of your vehicle and trailer when weighed in combination.

NOTE: The GCWR rating includes a 150 lbs (68 kg) allowance for the presence of a driver.

Gross Axle Weight Rating (GAWR)

The GAWR is the maximum capacity of the front and rear axles. Distribute the load over the front and rear axles evenly. Make sure that you do not exceed either front or rear GAWR. Refer to "Vehicle Loading/Vehicle Certification Label" in "Starting and Operating" for further information.

WARNING!

It is important that you do not exceed the maximum front or rear GAWR. A dangerous driving condition can result if either rating is exceeded. You could lose control of the vehicle and have a collision.

Tongue Weight (TW)

The tongue weight is the downward force exerted on the hitch ball by the trailer. In most cases it should not be less than 10% or more than 15% of the trailer load. You must consider this as part of the load on your vehicle.

Frontal Area

The frontal area is the maximum height multiplied by the maximum width of the front of a trailer.

Weight-Carrying Hitch

A weight-carrying hitch supports the trailer tongue weight, just as if it were luggage located at a hitch ball or some other connecting point of the vehicle. These kinds of hitches are the most popular on the market today and they are commonly used to tow small- and medium-sized trailers.

Trailer Hitch Classification

The following chart provides the industry standard for the maximum trailer weight a given trailer hitch class can tow and should be used to assist you in selecting the correct trailer hitch for your intended towing condition.

Trailer Hitch Classification Definitions	
Class	**Max. Trailer Hitch Industry Standards**
Class I - Light Duty	2,000 lbs (907 kg)
Class II - Medium Duty	3,500 lbs (1 587 kg)
Class III - Heavy Duty	5,000 lbs (2 268 kg)
Class IV - Extra Heavy Duty	10,000 lbs (4 540 kg)
Refer to the “Trailer Towing Weights (Maximum Trailer Weight Ratings)” chart for the Maximum Gross Trailer Weight (GTW) towable for your given drivetrain.	
All trailer hitches should be professionally installed on your vehicle.	

Trailer Towing Weights (Maximum Trailer Weight Ratings)

The following chart provides the maximum trailer weight ratings towable for your given drivetrain.

Engine/Transmission	Max. Frontal Area	Max. Gross Trailer Wt. (GTW)	Max. Trailer Tongue Wt. (See Note 1)
2.4L/Auto	11 sq.ft. (1.0 sq.m) (See Note 2)	1,000 lbs (450 kg)	100 lbs (45 kg)
3.6L/Auto	22 sq.ft. (2.0 sq.m)	1,000 lbs (450 kg)	100 lbs (45 kg)
Refer to local laws for maximum trailer towing speeds.			

Note 1: The trailer tongue weight must be considered as part of the combined weight of occupants and cargo, and it should never exceed the weight referenced on the Tire and Loading Information placard. Refer to "Tire Safety Information" in "Starting and Operating" for further information.

Note 2: Enclosed trailers or open utility trailers with front shields/guards are not recommended for use with all four-cylinder engines with automatic transmission. Please see your authorized dealer for additional information.

Trailer And Tongue Weight

Always load a trailer with 60% to 65% of the weight in the front of the trailer. This places 10% to 15% of the Gross Trailer Weight (GTW) on the tow hitch of your vehicle. Loads balanced over the wheels or heavier in the rear can cause the trailer to sway **severely** side to side which will cause loss of control of the vehicle and trailer. Failure to load trailers heavier in front is the cause of many trailer collisions.

Never exceed the maximum tongue weight stamped on your bumper or trailer hitch.

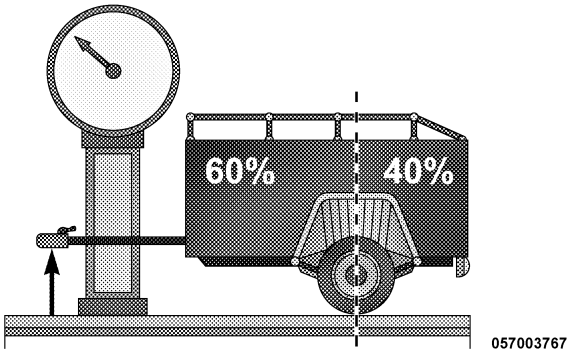

Consider the following items when computing the weight on the rear axle of the vehicle:

- The tongue weight of the trailer.
- The weight of any other type of cargo or equipment put in or on your vehicle.
- The weight of the driver and all passengers.

NOTE: Remember that everything put into or on the trailer adds to the load on your vehicle. Also, additional factory-installed options or dealer-installed options must be considered as part of the total load on your vehicle. Refer to the "Tire and Loading Information" placard for the maximum combined weight of occupants and cargo for your vehicle.

Towing Requirements

To promote proper break-in of your new vehicle drive-train components the following guidelines are recommended:

CAUTION!

- **Do not tow a trailer at all during the first 500 miles (805 km) the new vehicle is driven. The engine, axle or other parts could be damaged.**

(Continued)

CAUTION! (Continued)

- **Then, during the first 500 miles (805 km) that a trailer is towed, do not drive over 50 mph (80 km/h) and do not make starts at full throttle. This helps the engine and other parts of the vehicle wear in at the heavier loads.**

WARNING!

Improper towing can lead to a collision. Follow these guidelines to make your trailer towing as safe as possible:

- **Make certain that the load is secured in the trailer and it will not shift during travel. When trailering cargo that is not fully secured, dynamic load shifts can occur that may be difficult for the driver to control. You could lose control of your vehicle and have a collision.**

(Continued)

WARNING! (Continued)

- **When hauling cargo or towing a trailer, do not overload your vehicle or trailer. Overloading can cause a loss of control, poor performance, or damage to brakes, axle, engine, transmission, steering, suspension, chassis structure, or tires.**
- **Safety chains must always be used between your vehicle and trailer. Always connect the chains to the frame or hook retainers of the vehicle hitch. Cross the chains under the trailer tongue and allow enough slack for turning corners.**
- **Vehicles with trailers should not be parked on a grade. When parking, apply the parking brake on the tow vehicle. Put the tow vehicle automatic transmission in PARK. Always, block or "chock" the trailer wheels.**
- **GCWR must not be exceeded.**

(Continued)

WARNING! (Continued)

- **Total weight must be distributed between the tow vehicle and the trailer such that the following four ratings are not exceeded:**

  1. Max loading as defined on the "Tire and Loading Information" placard.

  2. GTW

  3. GAWR

  4. Tongue weight rating for the trailer hitch utilized. (This requirement may limit the ability to always achieve the 10% to 15% range of tongue weight as a percentage of total trailer weight.)

Towing Requirements – Tires

- Do not attempt to tow a trailer while using a compact spare tire.

- Proper tire inflation pressures are essential to the safe and satisfactory operation of your vehicle. Refer to "Tires – General Information" in "Starting and Operating" for proper tire inflation procedures.
- Check the trailer tires for proper tire inflation pressures before trailer usage.
- Check for signs of tire wear or visible tire damage before towing a trailer. Refer to "Tires – General Information" in "Starting and Operating" for the proper inspection procedure.
- When replacing tires, refer to "Tires – General Information" in "Starting and Operating" for the proper tire replacement procedures. Replacing tires with a higher load carrying capacity will not increase the vehicle's GVWR and GAWR limits.

Towing Requirements – Trailer Brakes

- Do **not** interconnect the hydraulic brake system or vacuum system of your vehicle with that of the trailer. This could cause inadequate braking and possible personal injury.
- An electronically actuated trailer brake controller is required when towing a trailer with electronically actuated brakes. When towing a trailer equipped with a hydraulic surge actuated brake system, an electronic brake controller is not required.
- Trailer brakes are recommended for trailers over 1,000 lbs (454 kg) and required for trailers in excess of 2,000 lbs (907 kg).

CAUTION!

If the trailer weighs more than 1,000 lbs (454 kg) loaded, it should have its own brakes and they should be of adequate capacity. Failure to do this could lead to accelerated brake lining wear, higher brake pedal effort, and longer stopping distances.

WARNING!

- **Do not connect trailer brakes to your vehicle's hydraulic brake lines. It can overload your brake system and cause it to fail. You might not have brakes when you need them and could have a collision.**

(Continued)

WARNING! (Continued)

- **Towing any trailer will increase your stopping distance. When towing you should allow for additional space between your vehicle and the vehicle in front of you. Failure to do so could result in a collision.**

Towing Requirements – Trailer Lights And Wiring

Whenever you pull a trailer, regardless of the trailer size, stop lights and turn signals on the trailer are required for motoring safety.

Towing Tips

Before setting out on a trip, practice turning, stopping, and backing up the trailer in an area located away from heavy traffic.

Automatic Transmission

The DRIVE range can be selected when towing. However, if frequent shifting occurs while in this range, select the ″3″ range (with four-speed transmission), or select a lower gear using the AutoStick® shift control (with six-speed transmission).

NOTE: Using a lower gear while operating the vehicle under heavy loading conditions, will improve performance and extend transmission life by reducing excessive shifting and heat build-up. This action will also provide better engine braking.

If you **REGULARLY TOW** a trailer for more than 45 minutes of continuous operation, then change the automatic transmission fluid and filter as specified for "police, taxi, fleet, or frequent trailer towing." Refer to the "Maintenance Schedule" for the proper maintenance intervals.

NOTE: Check the transmission fluid level (four-speed transmission only) before towing. The six-speed transmission does not require a fluid level check before towing. If, however, you notice fluid leakage or transmission malfunction, see your authorized dealer immediately for assistance.

AutoStick® – If Equipped

- When using the AutoStick® shift control, select the highest gear that allows for adequate performance and avoids frequent downshifts. For example, choose "4" if the desired speed can be maintained. Choose "3" or "2" if needed to maintain the desired speed.
- Extended driving at high RPM should be avoided to prevent excess heat generation. A reduction in vehicle speed may be required to avoid extended driving at high RPM. Return to a higher gear or vehicle speed when grade and road conditions allow.

Electronic Speed Control – If Equipped

- Do not use in hilly terrain or with heavy loads.
- When using the speed control, if you experience speed drops greater than 10 mph (16 km/h), disengage until you can get back to cruising speed.
- Use speed control in flat terrain and with light loads to maximize fuel efficiency.

Cooling System

To reduce potential for engine and transmission overheating, take the following actions:

City Driving

When stopped for short periods of time, shift the transmission into NEUTRAL and increase engine idle speed.

Highway Driving

Reduce speed.

Air Conditioning

Turn off temporarily.

RECREATIONAL TOWING (BEHIND MOTORHOME, ETC.)
Towing This Vehicle Behind Another Vehicle

Towing Condition	Wheels OFF the Ground	All Models
Flat Tow	NONE	**NOT ALLOWED**
Dolly Tow	Front	OK
	Rear	**NOT ALLOWED**
On Trailer	ALL	OK

Recreational Towing – All Models

Recreational towing is allowed ONLY if the front wheels are OFF the ground. This may be accomplished using a tow dolly or vehicle trailer. If using a tow dolly, follow this procedure:

1. Properly secure the dolly to the tow vehicle, following the dolly manufacturer's instructions.
2. Drive the front wheels onto the tow dolly.
3. Firmly apply the parking brake. Place the transmission in PARK.
4. Properly secure the front wheels to the dolly, following the dolly manufacturer's instructions.
5. Release the parking brake.

CAUTION!

- **DO NOT flat tow this vehicle. Damage to the drivetrain will result.**
- **Towing this vehicle in violation of the above requirements can cause severe transmission damage. Damage from improper towing is not covered under the New Vehicle Limited Warranty.**

WHAT TO DO IN EMERGENCIES

CONTENTS

- HAZARD WARNING FLASHERS 398
- IF YOUR ENGINE OVERHEATS 398
  - Engine Oil Overheating — 2.4L Engine Only (If Equipped). 399
- JACKING AND TIRE CHANGING 400
  - Jack Location 400
  - Spare Tire Stowage 400
  - Preparations For Jacking 401
  - Jacking Instructions 402
  - Road Tire Installation. 408
- JUMP-STARTING 410
  - Preparations For Jump-Start 411
  - Jump-Starting Procedure 413
- FREEING A STUCK VEHICLE. 415
- SHIFT LEVER OVERRIDE 416
- TOWING A DISABLED VEHICLE 417
  - Without The Ignition Key 419

HAZARD WARNING FLASHERS

The Hazard Warning flasher switch is located on the instrument panel, below the radio.

Press the switch to turn on the Hazard Warning flasher. When the switch is activated, all directional turn signals will flash on and off to warn oncoming traffic of an emergency. Press the switch a second time to turn off the Hazard Warning flashers.

This is an emergency warning system and it should not be used when the vehicle is in motion. Use it when your vehicle is disabled and it is creating a safety hazard for other motorists.

When you must leave the vehicle to seek assistance, the Hazard Warning flashers will continue to operate even though the ignition is placed in the OFF position.

NOTE: With extended use the Hazard Warning flashers may wear down your battery.

IF YOUR ENGINE OVERHEATS

In any of the following situations, you can reduce the potential for overheating by taking the appropriate action.

- On the highways — slow down.
- In city traffic — while stopped, place the transmission in NEUTRAL, but do not increase engine idle speed.

NOTE: There are steps that you can take to slow down an impending overheat condition:

- If your air conditioner (A/C) is on, turn it off. The A/C system adds heat to the engine cooling system and turning the A/C off can help remove this heat.
- You can also turn the temperature control to maximum heat, the mode control to floor and the blower control to high. This allows the heater core to act as a supplement to the radiator and aids in removing heat from the engine cooling system.

CAUTION!

Driving with a hot cooling system could damage your vehicle. If the pointer rises to the H (red) mark, the instrument cluster will sound a chime. When safe, pull over and stop the vehicle with the engine at idle. Turn off the air conditioning and wait until the pointer drops back into the normal range. If the pointer remains on the H (red) mark for more than a minute, turn the engine off immediately and call for service.

WARNING!

You or others can be badly burned by hot engine coolant (antifreeze) or steam from your radiator. If you see or hear steam coming from under the hood, do not open the hood until the radiator has had time

(Continued)

WARNING! (Continued)

to cool. Never try to open a cooling system pressure cap when the radiator or coolant bottle is hot.

Engine Oil Overheating — 2.4L Engine Only (If Equipped)

During sustained high-speed driving or trailer tow up long grades on hot day, the engine oil temperature may become too hot. If this happens, the "HOTOIL" message flashes, the vehicle speed will be reduced to 53 mph (85 km/h) until the engine oil temperature is reduced.

NOTE: Engine speed is reduced to 53 mph (85 km/h) at the maximum. You may of course, reduce your speed further if needed.

JACKING AND TIRE CHANGING

WARNING!

- **Do not attempt to change a tire on the side of the vehicle close to moving traffic. Pull far enough off the road to avoid the danger of being hit when operating the jack or changing the wheel.**
- **Being under a jacked-up vehicle is dangerous. The vehicle could slip off the jack and fall on you. You could be crushed. Never put any part of your body under a vehicle that is on a jack. If you need to get under a raised vehicle, take it to a service center where it can be raised on a lift.**
- **Never start or run the engine while the vehicle is on a jack.**

(Continued)

WARNING! (Continued)

- **The jack is designed to be used as a tool for changing tires only. The jack should not be used to lift the vehicle for service purposes. The vehicle should be jacked on a firm level surface only. Avoid ice or slippery areas.**

Jack Location

The jack and jack-handle are stowed under the load floor in the trunk.

Spare Tire Stowage

The compact spare tire is stowed under the rear load floor in the trunk.

Spare Tire Removal

Lift up the load floor cover and remove the hold down.

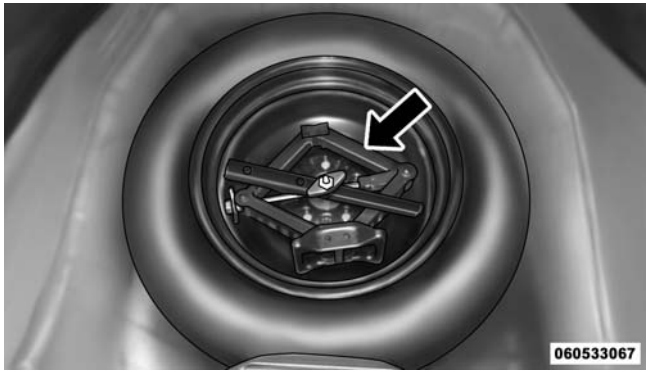

Spare Tire And Jack Storage

Preparations For Jacking

1. Park the vehicle on a firm, level surface. Avoid ice or slippery areas.

WARNING!

Do not attempt to change a tire on the side of the vehicle close to moving traffic, pull far enough off the road to avoid the danger of being hit when operating the jack or changing the wheel.

2. Turn on the Hazard Warning flashers.
3. Set the parking brake.
4. Place the shift lever into PARK (automatic transmission) or REVERSE (manual transmission).
5. Turn OFF the ignition.

6. Block both the front and rear of the wheel diagonally opposite the jacking position. For example, if changing the right front tire, block the left rear wheel.

NOTE: Passengers should not remain in the vehicle while the vehicle is being jacked.

Jacking Instructions

WARNING!

Carefully follow these tire changing warnings to help prevent personal injury or damage to your vehicle:

(Continued)

WARNING! (Continued)

- **Always park on a firm, level surface as far from the edge of the roadway as possible before raising the vehicle.**
- **Turn on the Hazard Warning flasher.**
- **Block the wheel diagonally opposite the wheel to be raised.**
- **Set the parking brake firmly and set an automatic transmission in PARK; a manual transmission in REVERSE.**
- **Never start or run the engine with the vehicle on a jack.**
- **Do not let anyone sit in the vehicle when it is on a jack.**
- **Do not get under the vehicle when it is on a jack. If you need to get under a raised vehicle, take it to a service center where it can be raised on a lift.**

(Continued)

WARNING! (Continued)

- **Only use the jack in the positions indicated and for lifting this vehicle during a tire change.**
- **If working on or near a roadway, be extremely careful of motor traffic.**
- **To assure that spare tires, flat or inflated, are securely stowed, spares must be stowed with the valve stem facing the ground.**

Jack Warning Label

CAUTION!

Do not attempt to raise the vehicle by jacking on locations other than those indicated in the Jacking Instructions for this vehicle.

NOTE: Refer to the Compact Spare Tire section of Tires--General Information--for information about the spare tire, its use, and operation.

1. Remove the scissors jack and lug wrench from the spare wheel as an assembly. Turn the jack screw to the left to loosen the lug wrench, and remove the wrench from the jack assembly.

NOTE: The jack handle attaches to the side of the jack with two attachment points. When the jack is partially expanded, the tension between the two attachment points holds the jack handle in place.

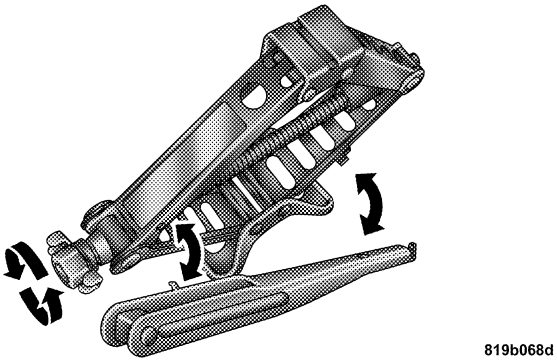

Removing Jack Handle From Jack

2. Loosen, but do not remove, the wheel nuts by turning them to the left one turn while the wheel is still on the ground.

CAUTION!
Do not attempt to raise the vehicle by jacking on locations other than those indicated in Step 3.

3. There is a front and rear jacking location on each side of the vehicle.

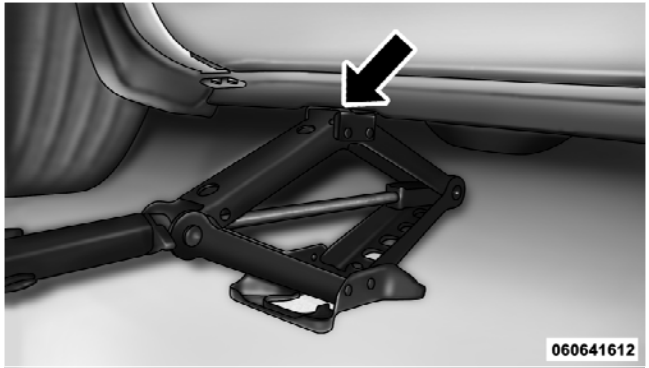

Front Jacking Location

Rear Jacking Location

4. Turn the jack screw to the left until the jack can be placed under the jacking location. Once the jack is positioned, turn the jack screw to the right until the jack head is properly engaged with the lift area closest to the wheel to be changed. Do not raise the vehicle until you are sure the jack is securely engaged.

WARNING!

Raising the vehicle higher than necessary can make the vehicle less stable. It could slip off the jack and hurt someone near it. Raise the vehicle only enough to remove the tire.

5. Raise the vehicle by turning the jack screw to the right, using the swivel wrench. Raise the vehicle only until the tire just clears the surface and enough clearance is obtained to install the spare tire. Minimum tire lift provides maximum stability.
6. Remove the wheel nuts, and pull the wheel and wheel covers (where applicable) off the hub. Install the spare wheel and wheel nuts with the cone shaped end of the nuts toward the wheel. Lightly tighten the nuts.

CAUTION!

Be sure to mount the spare tire with the valve stem facing outward. The vehicle could be damaged if the spare tire is mounted incorrectly.

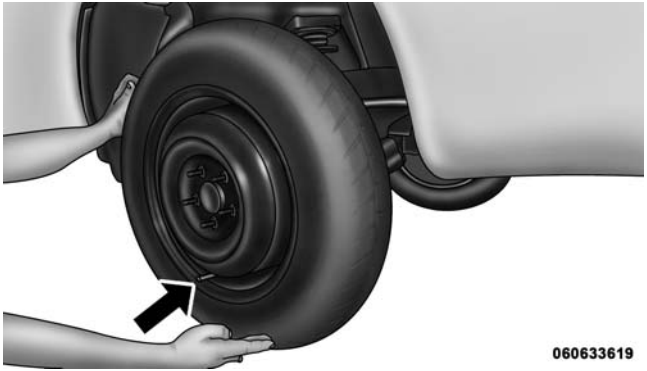

Mounting Spare Tire

WARNING!

- **To avoid the risk of forcing the vehicle off the jack, do not tighten the lug nuts fully until the vehicle has been lowered. Failure to follow this warning may result in personal injury.**
- **To avoid possible personal injury, handle the wheel covers with care to avoid contact with any sharp edges.**

7. Lower the vehicle by turning the jack screw to the left.
8. Finish tightening the nuts. Push down on the wrench while at the end of the handle for increased leverage. Tighten the lug nuts in a star pattern until each nut has been tightened twice. The correct wheel nut torque is 100 ft lbs (135 N·m). If you doubt that you have tightened the nuts correctly, have them checked with a torque wrench by your authorized dealer or at a service station.
9. Remove the wheel blocks and lower the jack until it is free. Release the parking brake before driving the vehicle. Reassemble the lug wrench to the jack assembly and stow it in the spare tire area. Secure the assembly using the means provided.

WARNING!

A loose tire or jack thrown forward in a collision or hard stop could endanger the occupants of the vehicle. Always stow the jack parts and the spare tire in the places provided.

10. Place the deflated (flat) tire in the cargo area and **have the tire repaired or replaced as soon as possible.**
11. Check the tire pressure as soon as possible. Correct the tire pressure as required.

Road Tire Installation

Vehicles Equipped With Wheel Covers

1. Mount the road tire on the axle.
2. To ease the installation process for steel wheels with wheel covers, install two lug nuts on the mounting studs which are on each side of the valve stem. Install the lug nuts with the cone shaped end of the nut toward the wheel. Lightly tighten the lug nuts.

WARNING!

To avoid the risk of forcing the vehicle off the jack, do not tighten the wheel nuts fully until the vehicle has been lowered. Failure to follow this warning may result in personal injury.

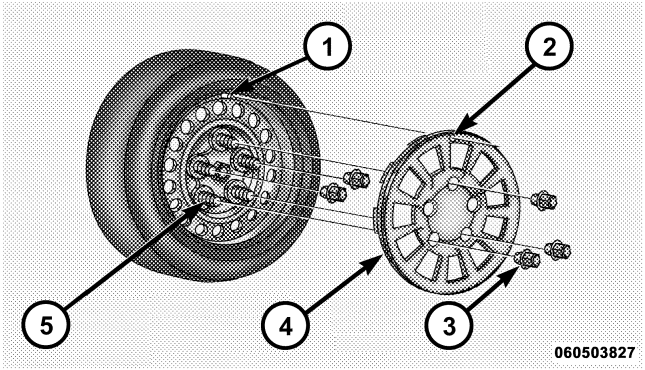

Tire And Wheel Cover Or Center Cap

1 — Valve Stem
2 — Valve Notch
3 — Wheel Lug Nut
4 — Wheel Cover
5 — Mounting Stud

3. Align the valve notch in the wheel cover with the valve stem on the wheel. Install the cover by hand, snapping the cover over the two lug nuts. Do not use a hammer or excessive force to install the cover.

4. Install the remaining lug nuts with the cone shaped end of the nut toward the wheel. Lightly tighten the lug nuts.

WARNING!

To avoid the risk of forcing the vehicle off the jack, do not tighten the wheel nuts fully until the vehicle has been lowered. Failure to follow this warning may result in personal injury.

5. Lower the vehicle to the ground by turning the jack handle counterclockwise.

6. Finish tightening the lug nuts. Push down on the wrench while at the end of the handle for increased leverage. Tighten the lug nuts in a star pattern until each nut has been tightened twice. The correct tightness of each lug nut is 100 ft/lbs (135 N·m). If in doubt about the correct tightness, have them checked with a torque wrench by your authorized dealer or service station.

7. After 25 miles (40 km) check the lug nut torque with a torque wrench to ensure that all lug nuts are properly seated against the wheel.

Vehicles Without Wheel Covers

1. Mount the road tire on the axle.

2. Install the remaining lug nuts with the cone shaped end of the nut toward the wheel. Lightly tighten the lug nuts.

WARNING!

To avoid the risk of forcing the vehicle off the jack, do not tighten the wheel nuts fully until the vehicle has been lowered. Failure to follow this warning may result in personal injury.

3. Lower the vehicle to the ground by turning the jack handle counterclockwise.
4. Finish tightening the lug nuts. Push down on the wrench while at the end of the handle for increased leverage. Tighten the lug nuts in a star pattern until each nut has been tightened twice. The correct tightness of each lug nut is 100 ft/lbs (135 N·m). If in doubt about the correct tightness, have them checked with a torque wrench by your authorized dealer or service station.
5. After 25 miles (40 km) check the lug nut torque with a torque wrench to ensure that all lug nuts are properly seated against the wheel.

JUMP-STARTING

If your vehicle has a discharged battery it can be jump-started using a set of jumper cables and a battery in another vehicle or by using a portable battery booster pack. Jump-starting can be dangerous if done improperly so please follow the procedures in this section carefully.

NOTE: When using a portable battery booster pack follow the manufacturer's operating instructions and precautions.

CAUTION!

Do not use a portable battery booster pack or any other booster source with a system voltage greater

(Continued)

CAUTION! (Continued)

than 12 Volts or damage to the battery, starter motor, alternator or electrical system may occur.

WARNING!

Do not attempt jump-starting if the battery is frozen. It could rupture or explode and cause personal injury.

Preparations For Jump-Start

The battery in your vehicle is located between the left front headlight assembly and the left front wheel splash shield. To allow jump-starting there are remote battery posts located on the left side of the engine compartment.

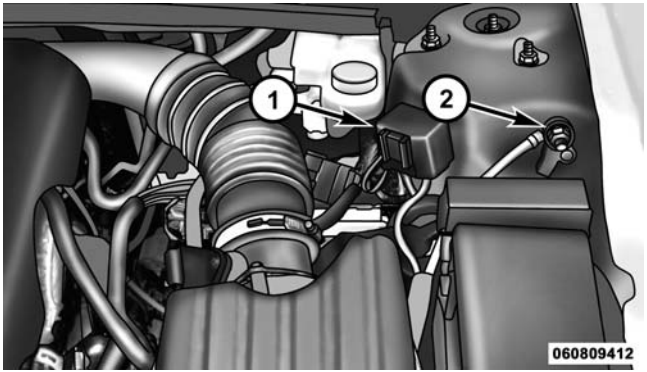

Remote Battery Posts

1 — Remote Positive **(+)** Post (covered with protective cap)
2 — Remote Negative **(-)** Post

WARNING!

- **Take care to avoid the radiator cooling fan whenever the hood is raised. It can start anytime the ignition switch is ON. You can be injured by moving fan blades.**
- **Remove any metal jewelry such as watch bands or bracelets that might make an inadvertent electrical contact. You could be seriously injured.**
- **Batteries contain sulfuric acid that can burn your skin or eyes and generate hydrogen gas which is flammable and explosive. Keep open flames or sparks away from the battery.**

1. Set the parking brake, shift the automatic transmission into PARK and turn the ignition to LOCK.
2. Turn off the heater, radio, and all unnecessary electrical accessories.
3. Remove the protective cover over the remote positive **(+)** battery post. To remove the cover, press the locking tab and pull upward on the cover.

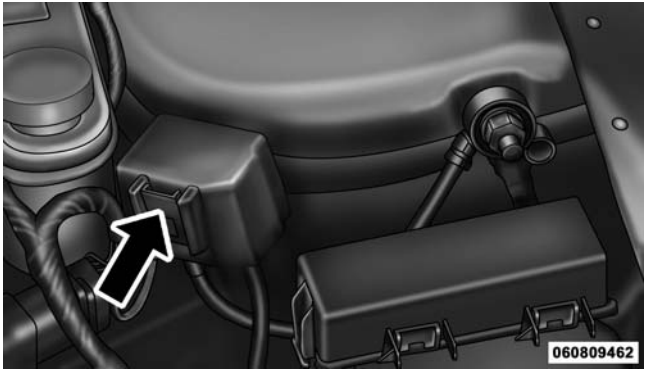

Locking Tab

4. If using another vehicle to jump-start the battery, park the vehicle within the jumper cables reach, set the parking brake and make sure the ignition is OFF.

WARNING!

Do not allow vehicles to touch each other as this could establish a ground connection and personal injury could result.

Jump-Starting Procedure

WARNING!

Failure to follow this procedure could result in personal injury or property damage due to battery explosion.

CAUTION!

Failure to follow these procedures could result in damage to the charging system of the booster vehicle or the discharged vehicle.

1. Connect the positive **(+)** end of the jumper cable to the remote positive **(+)** post of the discharged vehicle.
2. Connect the opposite end of the positive **(+)** jumper cable to the positive **(+)** post of the booster battery.
3. Connect the negative end **(-)** of the jumper cable to the negative **(-)** post of the booster battery.
4. Connect the opposite end of the negative **(-)** jumper cable to the remote negative **(-)** post of the vehicle with the discharged battery.

WARNING!

Do not connect the cable to the negative post (-) of the discharged battery. The resulting electrical spark could cause the battery to explode and could result in personal injury.

5. Start the engine in the vehicle that has the booster battery, let the engine idle a few minutes, and then start the engine in the vehicle with the discharged battery.

Once the engine is started, remove the jumper cables in the reverse sequence:

6. Disconnect the negative **(-)** jumper cable from the remote negative **(-)** post of the vehicle with the discharged battery.
7. Disconnect the negative end **(-)** of the jumper cable from the negative **(-)** post of the booster battery.
8. Disconnect the opposite end of the positive **(+)** jumper cable from the positive **(+)** post of the booster battery.
9. Disconnect the positive **(+)** end of the jumper cable from the remote positive **(+)** post of the discharged vehicle.
10. Reinstall the protective cover over the remote positive **(+)** battery post of the discharged vehicle.

If frequent jump-starting is required to start your vehicle, you should have the battery and charging system inspected at your authorized dealer.

CAUTION!

Accessories that can be plugged into the vehicle power outlets draw power from the vehicle's battery, even when not in use (i.e., cellular phones, etc.). Eventually, if plugged in long enough, the vehicle's

(Continued)

CAUTION! (Continued)

battery will discharge sufficiently to degrade battery life and/or prevent the engine from starting.

FREEING A STUCK VEHICLE

If your vehicle becomes stuck in mud, sand, or snow, it can often be moved using a rocking motion. Turn the steering wheel right and left to clear the area around the front wheels. Then shift back and forth between DRIVE and REVERSE, while gently pressing the accelerator. Use the least amount of accelerator pedal pressure to maintain the rocking motion, without spinning the wheels, or racing the engine.

CAUTION!

Racing the engine or spinning the wheels may lead to transmission overheating and failure. Allow the engine to idle with the shift lever in NEUTRAL for at least one minute after every five rocking-motion cycles. This will minimize overheating and reduce the risk of transmission failure during prolonged efforts to free a stuck vehicle.

NOTE: Press the "ESC Off" switch, to place the Electronic Stability Control (ESC) system in "Partial Off" mode, before rocking the vehicle. Refer to "Electronic Brake Control" in "Starting And Operating" for further information. Once the vehicle has been freed, press the "ESC Off" switch again to restore "ESC On" mode.

CAUTION!

- **When "rocking" a stuck vehicle by shifting between DRIVE and REVERSE, do not spin the wheels faster than 15 mph (24 km/h), or drivetrain damage may result.**
- **Revving the engine or spinning the wheels too fast may lead to transmission overheating and failure. It can also damage the tires. Do not spin the wheels above 30 mph (48 km/h) while in gear (no transmission shifting occurring).**

WARNING!

Fast spinning tires can be dangerous. Forces generated by excessive wheel speeds may cause damage, or even failure, of the axle and tires. A tire could

(Continued)

WARNING! (Continued)

explode and injure someone. Do not spin your vehicle's wheels faster than 30 mph (48 km/h) or for longer than 30 seconds continuously without stopping when you are stuck and do not let anyone near a spinning wheel, no matter what the speed.

SHIFT LEVER OVERRIDE

If a malfunction occurs and the shift lever cannot be moved out of the PARK position, you can use the following procedure to temporarily move the shift lever:

1. Turn the engine OFF.
2. Firmly apply the parking brake.
3. Remove the rubber cupholder liner. Squeeze one side of the liner's center to expose its edge and facilitate removal.

4. Turn the ignition to the ACC or ON/RUN position, but do not start the engine.
5. Press and maintain firm pressure on the brake pedal.
6. Insert a screwdriver or similar tool into the access hole (at the front of the cupholder) and push and hold the override release lever forward.
7. Move the shift lever to the NEUTRAL position.
8. The vehicle may then be started in NEUTRAL.
9. Reinstall the cupholder liner.

TOWING A DISABLED VEHICLE

This section describes procedures for towing a disabled vehicle using a towing service.

Towing Condition	Wheels OFF the Ground	All Models
Flat Tow	NONE	**If transmission is operable:** • Transmission in **NEUTRAL** • 25 mph (40 km/h) **max** speed • 15 mi (24 km) **max** distance
Wheel Lift Or Dolly Tow	Rear	
	Front	OK
Flatbed	**ALL**	**BEST METHOD**

Proper towing or lifting equipment is required to prevent damage to your vehicle. Use only tow bars and other equipment designed for this purpose, following equipment manufacturer's instructions. Use of safety chains is mandatory. Attach a tow bar or other towing device to main structural members of the vehicle, not to bumpers or associated brackets. State and local laws regarding vehicles under tow must be observed.

If you must use the accessories (wipers, defrosters, etc.) while being towed, the ignition must be in the ON/RUN position, not the ACC position.

If your vehicle's battery is discharged, see "Shift Lever Override" in "What To Do In Emergencies" for instructions on shifting the automatic transmission out of PARK for towing.

CAUTION!

- **Do not use sling type equipment when towing. Damage to the fascia will occur.**
- **When securing the vehicle to a flatbed truck, do not attach to front or rear suspension components. Damage to your vehicle may result from improper towing.**
- **Do not push or tow this vehicle with another vehicle as damage to the bumper fascia and transmission may result.**

The manufacturer recommends towing your vehicle with all four wheels OFF the ground using a flatbed.

If flatbed equipment is not available, and the transmission is operable, the vehicle may be flat towed (with all four wheels on the ground) under the following conditions:

- The transmission must be in NEUTRAL.
- The towing distance must not exceed 15 mi (24 km).
- The towing speed must not exceed 25 mph (40 km/h).

If the transmission is not operable, or the vehicle must be towed faster than 25 mph (40 km/h) or farther than 15 mi (24 km), it must be towed with the front wheels OFF the ground (using a flatbed truck, towing dolly, or wheel lift equipment with the front wheels raised).

CAUTION!

Towing faster than 25 mph (40 km/h) or farther than 15 mi (24 km) with front wheels on the ground can cause severe transmission damage. Such damage is not covered by the New Vehicle Limited Warranty.

Without The Ignition Key

Special care must be taken when the vehicle is towed with the ignition in the LOCK/OFF position. Flatbed towing is the preferred towing method. However, if a flatbed towing vehicle is not available, wheel lift towing equipment may be used. Rear towing (with the front wheels on the ground) is not allowed, as transmission damage will occur. If rear towing is the only alternative, the front wheels must be placed on a towing dolly. Proper towing equipment is necessary to prevent damage to the vehicle.

CAUTION!

Failure to follow these towing methods can cause severe transmission damage. Such damage is not covered by the New Vehicle Limited Warranty.

MAINTAINING YOUR VEHICLE

CONTENTS

- ENGINE COMPARTMENT — 2.4L 423
- ENGINE COMPARTMENT — 3.6L 424
- ONBOARD DIAGNOSTIC SYSTEM — OBD II . .425
  - Loose Fuel Filler Cap Message 425
- EMISSIONS INSPECTION AND MAINTENANCE PROGRAMS 426
- REPLACEMENT PARTS 427
- DEALER SERVICE 427
- MAINTENANCE PROCEDURES 428
  - Engine Oil 429
  - Engine Oil Filter 432
  - Engine Air Cleaner Filter 432
  - Maintenance-Free Battery 433
  - Air Conditioner Maintenance 434
  - A/C Air Filter – If Equipped 435
  - Body Lubrication 437
  - Windshield Wiper Blades 438
  - Adding Washer Fluid 438
  - Exhaust System 439
  - Cooling System 441

- Brake System 447
- Automatic Transmission 449
- Appearance Care And Protection From Corrosion 453
- Cleaning Center Console Cupholders. 459
- Convertible Top Care 460
- Weather Strip Care – Soft And Hard Top 462

■ FUSES 462
- Integrated Power Module 462

■ VEHICLE STORAGE 468

■ REPLACEMENT BULBS 469

■ BULB REPLACEMENT 470
- Headlamp 470
- Front Turn Signal 472
- Front Fog Lamp 472
- Backup Lamps 473
- License Plate Lamp 474

■ FLUID CAPACITIES 475

■ FLUIDS, LUBRICANTS AND GENUINE PARTS 476
- Engine 476
- Chassis 477

ENGINE COMPARTMENT — 2.4L

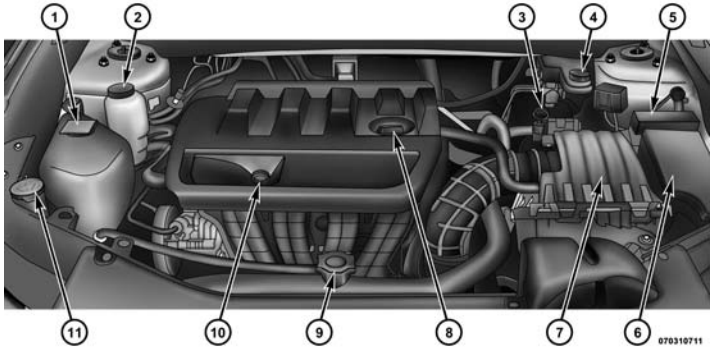

1 — Engine Coolant Reservoir
2 — Power Steering Fluid Reservoir
3 — Automatic Transmission Dipstick
4 — Brake Fluid Reservoir
5 — Integrated Power Module (Fuses)
6 — Power Distribution Center (Fuses)
7 — Air Cleaner Filter
8 — Engine Oil Fill
9 — Coolant Pressure Cap
10 — Engine Oil Dipstick
11 — Washer Fluid Reservoir

ENGINE COMPARTMENT — 3.6L

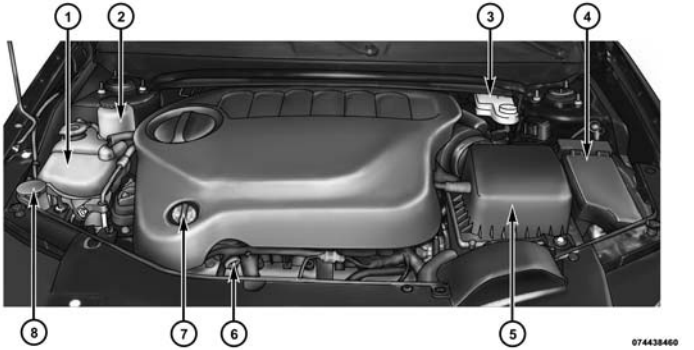

1 — Engine Coolant Reservoir
2 — Power Steering Fluid Reservoir
3 — Brake Fluid Reservoir
4 — Integrated Power Module (Fuses)
5 — Air Cleaner Filter
6 — Engine Oil Dipstick
7 — Engine Oil Fill
8 — Washer Fluid Reservoir

ONBOARD DIAGNOSTIC SYSTEM — OBD II

Your vehicle is equipped with a sophisticated onboard diagnostic system called OBD II. This system monitors the performance of the emissions, engine, and automatic transmission control systems. When these systems are operating properly, your vehicle will provide excellent performance and fuel economy, as well as engine emissions well within current government regulations.

If any of these systems require service, the OBD II system will turn on the "Malfunction Indicator Light" (MIL). It will also store diagnostic codes and other information to assist your service technician in making repairs. Although your vehicle will usually be drivable and not need towing, see your authorized dealer for service as soon as possible.

CAUTION!

- **Prolonged driving with the MIL on could cause further damage to the emission control system. It could also affect fuel economy and drivability. The vehicle must be serviced before any emissions tests can be performed.**
- **If the MIL is flashing while the engine is running, severe catalytic converter damage and power loss will soon occur. Immediate service is required.**

Loose Fuel Filler Cap Message

After fuel is added, the vehicle diagnostic system can determine if the fuel filler cap is possibly loose or improperly installed. A "GASCAP" message will be displayed in the instrument cluster. Tighten the gas cap until a "clicking" sound is heard. This is an indication that the gas cap is properly tightened. Press the trip odometer "Reset" button to turn off the message. If the problem

persists, the message will appear the next time the vehicle is started. This might indicate a damaged cap. If the problem is detected twice in a row, the system will turn on the "Malfunction Indicator Light (MIL)." Resolving the problem will turn the MIL light off.

EMISSIONS INSPECTION AND MAINTENANCE PROGRAMS

In some localities, it may be a legal requirement to pass an inspection of your vehicle's emissions control system. Failure to pass could prevent vehicle registration.

For states that require an Inspection and Maintenance (I/M), this check verifies the "Malfunction Indicator Light (MIL)" is functioning and is not on when the engine is running, and that the OBD II system is ready for testing.

Normally, the OBD II system will be ready. The OBD II system may **not** be ready if your vehicle was recently serviced, recently had a dead battery or a battery replacement. If the OBD II system should be determined not ready for the I/M test, your vehicle may fail the test.

Your vehicle has a simple ignition key-actuated test, which you can use prior to going to the test station. To check if your vehicle's OBD II system is ready, you must do the following:

1. Turn the ignition switch to the ON position, but do not crank or start the engine.
2. If you crank or start the engine, you will have to start this test over.
3. As soon as you turn the ignition switch to the ON position, you will see the MIL symbol come on as part of a normal bulb check.

4. Approximately 15 seconds later, one of two things will happen:

- The MIL will flash for about 10 seconds and then return to being fully illuminated until you turn OFF the ignition or start the engine. This means that your vehicle's OBD II system is **not ready** and you should **not** proceed to the I/M station.
- The MIL will not flash at all and will remain fully illuminated until you turn OFF the ignition or start the engine. This means that your vehicle's OBD II system is **ready** and you can proceed to the I/M station.

If your OBD II system is **not ready,** you should see your authorized dealer or repair facility. If your vehicle was recently serviced or had a battery failure or replacement, you may need to do nothing more than drive your vehicle as you normally would in order for your OBD II system to update. A recheck with the above test routine may then indicate that the system is now ready.

Regardless of whether your vehicle's OBD II system is ready or not, if the MIL is illuminated during normal vehicle operation you should have your vehicle serviced before going to the I/M station. The I/M station can fail your vehicle because the MIL is on with the engine running.

REPLACEMENT PARTS

Use of genuine MOPAR® parts for normal/scheduled maintenance and repairs is highly recommended to ensure the designed performance. Damage or failures caused by the use of non-MOPAR® parts for maintenance and repairs will not be covered by the manufacturer's warranty.

DEALER SERVICE

Your authorized dealer has the qualified service personnel, special tools, and equipment to perform all service operations in an expert manner. Service Manuals are

available which include detailed service information for your vehicle. Refer to these Service Manuals before attempting any procedure yourself.

NOTE: Intentional tampering with emissions control systems may void your warranty and could result in civil penalties being assessed against you.

WARNING!

You can be badly injured working on or around a motor vehicle. Only do service work for which you have the knowledge and the proper equipment. If you have any doubt about your ability to perform a service job, take your vehicle to a competent mechanic.

MAINTENANCE PROCEDURES

The pages that follow contain the **required** maintenance services determined by the engineers who designed your vehicle.

Besides those maintenance items specified in the fixed maintenance schedule, there are other components which may require servicing or replacement in the future.

CAUTION!

- **Failure to properly maintain your vehicle or perform repairs and service when necessary could result in more costly repairs, damage to other components or negatively impact vehicle performance. Immediately have potential malfunctions examined by an authorized dealer or qualified repair center.**

(Continued)

CAUTION! (Continued)

- **Your vehicle has been built with improved fluids that protect the performance and durability of your vehicle and also allow extended maintenance intervals. Do not use chemical flushes in these components as the chemicals can damage your engine, transmission, power steering or air conditioning. Such damage is not covered by the New Vehicle Limited Warranty. If a flush is needed because of component malfunction, use only the specified fluid for the flushing procedure.**

Engine Oil

Checking Oil Level

To assure proper engine lubrication, the engine oil must be maintained at the correct level. Check the oil level at regular intervals, such as every fuel stop. The best time to check the engine oil level is about five minutes after a fully warmed engine is shut off. Do not check oil level before starting the engine after it has sat overnight. Checking engine oil level when the engine is cold will give you an incorrect reading.

Checking the oil while the vehicle is on level ground and only when the engine is hot, will improve the accuracy of the oil level readings. Maintain the oil level between the range markings on the dipstick. Either the range markings consist of a crosshatch zone marked SAFE or a crosshatch zone marked with MIN at the low end of the range and MAX at the high end of the range. Adding one quart of oil when the reading is at the low end of the range marking will raise the oil level to the high end of the range marking.

CAUTION!

Do not overfill the engine. Overfilling the engine will cause oil aeration, which can lead to loss of oil

(Continued)

CAUTION! (Continued)

pressure and an increase in oil temperature. This could damage your engine. Also, be sure the oil fill cap is replaced and tightened after adding oil.

Change Engine Oil

The oil change indicator system will remind you that it is time to take your vehicle in for scheduled maintenance. Refer to the "Maintenance Schedule" for further information.

NOTE:Under no circumstances should oil change intervals exceed 10,000 miles (16,000 km) or twelve months, whichever occurs first.

Engine Oil Selection

For best performance and maximum protection under all types of operating conditions, the manufacturer only recommends engine oils that are API Certified and meet the requirements of Chrysler Material Standard MS-6395.

American Petroleum Institute (API) Engine Oil Identification Symbol

This symbol means that the oil has been certified by the American Petroleum Institute (API). The manufacturer only recommends API Certified engine oils.

CAUTION!

Do not use chemical flushes in your engine oil as the chemicals can damage your engine. Such damage is not covered by the New Vehicle Limited Warranty.

Engine Oil Viscosity – 2.4L Engine

SAE 5W-20 engine oil is recommended for all operating temperatures. This engine oil improves low temperature starting and vehicle fuel economy.

The engine oil filler cap also shows the recommended engine oil viscosity for your engine. For information on the engine oil filler cap location, refer to "Engine Compartment" in "Maintaining Your Vehicle" for further information.

Lubricants that do not have both, the engine oil certification mark and the correct SAE viscosity grade number should not be used.

Engine Oil Viscosity – 3.6L Engine

SAE 5W-20 engine oil is recommended for all operating temperatures. This engine oil improves low temperature starting and vehicle fuel economy.

The engine oil filler cap also shows the recommended engine oil viscosity for your vehicle. For information on engine oil filler cap location, refer to "Engine Compartment" in "Maintaining Your Vehicle" for further information.

Lubricants, which do not have both the engine oil certification mark and the correct SAE viscosity grade number, should not be used.

Synthetic Engine Oils

You may use synthetic engine oils provided the recommended oil quality requirements are met, and the recommended maintenance intervals for oil and filter changes are followed.

Materials Added To Engine Oil

The manufacturer strongly recommends against the addition of any additives (other than leak detection dyes) to

the engine oil. Engine oil is an engineered product and its performance may be impaired by supplemental additives.

Disposing Of Used Engine Oil And Oil Filters

Care should be taken in disposing of used engine oil and oil filters from your vehicle. Used oil and oil filters, indiscriminately discarded, can present a problem to the environment. Contact your authorized dealer, service station or governmental agency for advice on how and where used oil and oil filters can be safely discarded in your area.

Engine Oil Filter

The engine oil filter should be replaced with a new filter at every engine oil change.

Engine Oil Filter Selection

This manufacturer's engines have a full-flow type oil filter. Use a filter of this type for replacement. The quality of replacement filters varies considerably. Only high quality filters should be used to assure most efficient service. MOPAR® engine oil filters are a high quality oil filter and are recommended.

Engine Air Cleaner Filter

Refer to the "Maintenance Schedule" for the proper maintenance intervals.

WARNING!

The air induction system (air cleaner, hoses, etc.) can provide a measure of protection in the case of engine backfire. Do not remove the air induction system (air cleaner, hoses, etc.) unless such removal is necessary for repair or maintenance. Make sure that no one is near the engine compartment before starting the vehicle with the air induction system (air cleaner, hoses, etc.) removed. Failure to do so can result in serious personal injury.

Engine Air Cleaner Filter Selection

The quality of replacement engine air cleaner filters varies considerably. Only high quality filters should be used to assure most efficient service. MOPAR® engine air cleaner filters are a high quality filter and are recommended.

Maintenance-Free Battery

Your vehicle is equipped with a maintenance-free battery. You will never have to add water, nor is periodic maintenance required.

NOTE: The battery is stored in a compartment behind the left front fender and is accessible without removing the tire and wheel. Remote battery terminals are located in the engine compartment for jump-starting. Refer to "Jump-Starting Procedures" in "What To Do In Emergencies" for further information.

To access the battery, turn the steering wheel fully to the right and remove the inner fender shield.

WARNING!

- **Battery fluid is a corrosive acid solution and can burn or even blind you. Do not allow battery fluid to contact your eyes, skin, or clothing. Do not lean over a battery when attaching clamps. If acid splashes in eyes or on skin, flush the area immediately with large amounts of water.**
- **Battery gas is flammable and explosive. Keep flame or sparks away from the battery. Do not use a booster battery or any other booster source with an output greater than 12 Volts. Do not allow cable clamps to touch each other.**
- **Battery posts, terminals, and related accessories contain lead and lead compounds. Wash hands after handling.**

CAUTION!

- **It is essential when replacing the cables on the battery that the positive cable is attached to the positive post and the negative cable is attached to the negative post. Battery posts are marked positive (+) and negative (-) and are identified on the battery case. Cable clamps should be tight on the terminal posts and free of corrosion.**
- **If a "fast charger" is used while the battery is in the vehicle, disconnect both vehicle battery cables before connecting the charger to the battery. Do not use a "fast charger" to provide starting voltage.**

Air Conditioner Maintenance

For best possible performance, your air conditioner should be checked and serviced by an authorized dealer at the start of each warm season. This service should include cleaning of the condenser fins and a performance test. Drive belt tension should also be checked at this time.

CAUTION!

Do not use chemical flushes in your air conditioning system as the chemicals can damage your air conditioning components. Such damage is not covered by the New Vehicle Limited Warranty.

WARNING!

- **Use only refrigerants and compressor lubricants approved by the manufacturer for your air conditioning system. Some unapproved refrigerants are flammable and can explode, injuring you. Other unapproved refrigerants or lubricants can cause the system to fail, requiring costly repairs. Refer to Warranty Information Book, located on the DVD, for further warranty information.**
- **The air conditioning system contains refrigerant under high pressure. To avoid risk of personal injury or damage to the system, adding refrigerant or any repair requiring lines to be disconnected should be done by an experienced technician.**

Refrigerant Recovery And Recycling

R-134a Air Conditioning Refrigerant is a hydrofluorocarbon (HFC) that is endorsed by the Environmental Protection Agency and is an ozone-saving product. However, the manufacturer recommends that air conditioning service be performed by authorized dealer or other service facilities using recovery and recycling equipment.

NOTE: Use only manufacturer approved A/C system sealers, stop leak products, seal conditioners, compressor oil, and refrigerants.

A/C Air Filter – If Equipped

Refer to the "Maintenance Schedule" for the proper maintenance intervals.

WARNING!

Do not remove the A/C air filter while the blower is operating or personal injury may result.

The A/C Air Filter is located in the fresh air inlet behind the glove box. Perform the following procedure to replace the filter:

1. Open the glove box and remove all contents.
2. Push in on the sides of the glove box and lower the door.
3. Disconnect the glove box door dampener from the slot on the side of the box. This is done by grasping the dampener connector (on the outside of the box) and the end of the connector pin (on the inside of the box) with your thumb and forefinger and pulling outward while lightly lifting upward on the door with your other hand. Once disconnected, the dampener will retract underneath the instrument panel if you release it.
4. Pivot the glove box downward.
5. Disengage the two retaining tabs that secure the filter cover to the HVAC housing and remove the cover.

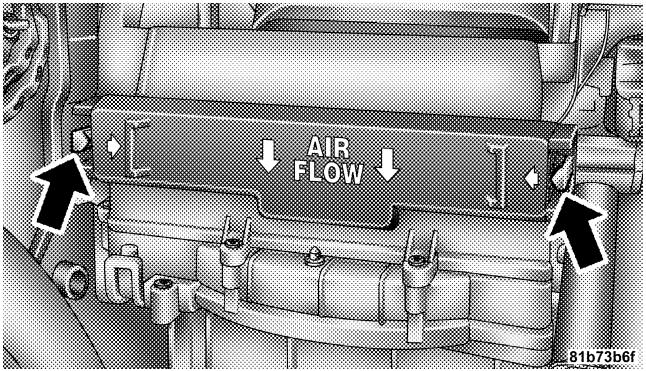

A/C Air Filter Replacement

6. Remove the A/C Air Filter by pulling it straight out of the housing.

7. Install the A/C Air Filter with the arrow on the filter pointing toward the floor. When installing the filter cover, make sure the retaining tabs fully engage the cover.

CAUTION!

The A/C air filter is identified with an arrow to indicate airflow direction through the filter. Failure to install the filter properly will result in the need to replace it more often.

8. Reinstall the glove box door dampener and glove box.

Body Lubrication

Locks and all body pivot points, including such items as seat tracks, door hinge pivot points and rollers, liftgate, tailgate, sliding doors and hood hinges, should be lubricated periodically with a lithium based grease, such as MOPAR® Spray White Lube or equivalent to assure quiet, easy operation and to protect against rust and wear. Prior to the application of any lubricant, the parts concerned should be wiped clean to remove dust and grit; after lubricating excess oil and grease should be removed. Particular attention should also be given to hood latching components to ensure proper function. When performing other underhood services, the hood latch, release mechanism and safety catch should be cleaned and lubricated.

The external lock cylinders should be lubricated twice a year, preferably in the Fall and Spring. Apply a small amount of a high quality lubricant, such as MOPAR® Lock Cylinder Lubricant or equivalent directly into the lock cylinder.

Windshield Wiper Blades

Clean the rubber edges of the wiper blades and the windshield periodically with a sponge or soft cloth and a mild nonabrasive cleaner. This will remove accumulations of salt or road film.

Operation of the wipers on dry glass for long periods may cause deterioration of the wiper blades. Always use washer fluid when using the wipers to remove salt or dirt from a dry windshield.

Avoid using the wiper blades to remove frost or ice from the windshield. Keep the blade rubber out of contact with petroleum products such as engine oil, gasoline, etc.

NOTE: Life expectancy of wiper blades varies depending on geographical area and frequency of use. Poor performance of blades may be present with chattering, marks, water lines or wet spots. If any of these conditions are present, clean the wiper blades or replace as necessary.

Adding Washer Fluid

The windshield washer and the rear window washer share the same fluid reservoir. The fluid reservoir is located in the engine compartment. Be sure to check the fluid level in the reservoir at regular intervals. Fill the reservoir with windshield washer solvent (not radiator antifreeze) and operate the system for a few seconds to flush out the residual water.

When refilling the washer fluid reservoir, apply some washer fluid to a cloth or towel and wipe the wiper blades clean. This will help blade performance.

To prevent freeze-up of your windshield washer system in cold weather, select a solution or mixture that meets or exceeds the temperature range of your climate. This rating information can be found on most washer fluid containers.

WARNING!

Commercially available windshield washer solvents are flammable. They could ignite and burn you. Care must be exercised when filling or working around the washer solution.

Exhaust System

The best protection against carbon monoxide entry into the vehicle body is a properly maintained engine exhaust system.

If you notice a change in the sound of the exhaust system; or if the exhaust fumes can be detected inside the vehicle; or when the underside or rear of the vehicle is damaged; have an authorized technician inspect the complete exhaust system and adjacent body areas for broken, damaged, deteriorated, or mispositioned parts. Open seams or loose connections could permit exhaust fumes to seep into the passenger compartment. In addition, have the exhaust system inspected each time the vehicle is raised for lubrication or oil change. Replace as required.

WARNING!

- **Exhaust gases can injure or kill. They contain carbon monoxide (CO), which is colorless and odorless. Breathing it can make you unconscious and can eventually poison you. To avoid breathing CO, refer to "Safety Tips/Exhaust Gas" in "Things To Know Before Starting Your Vehicle" for further information.**
- **A hot exhaust system can start a fire if you park over materials that can burn. Such materials might be grass or leaves coming into contact with your exhaust system. Do not park or operate your vehicle in areas where your exhaust system can contact anything that can burn.**

CAUTION!

- **The catalytic converter requires the use of unleaded fuel only. Leaded gasoline will destroy the effectiveness of the catalyst as an emissions control device and may seriously reduce engine performance and cause serious damage to the engine.**
- **Damage to the catalytic converter can result if your vehicle is not kept in proper operating condition. In the event of engine malfunction, particularly involving engine misfire or other apparent loss of performance, have your vehicle serviced promptly. Continued operation of your vehicle with a severe malfunction could cause the converter to overheat, resulting in possible damage to the converter and vehicle.**

Under normal operating conditions, the catalytic converter will not require maintenance. However, it is important to keep the engine properly tuned to assure proper catalyst operation and prevent possible catalyst damage.

NOTE: Intentional tampering with emissions control systems can result in civil penalties being assessed against you.

In unusual situations involving grossly malfunctioning engine operation, a scorching odor may suggest severe and abnormal catalyst overheating. If this occurs, stop the vehicle, turn off the engine and allow it to cool. Service, including a tune-up to manufacturer's specifications, should be obtained immediately.

To minimize the possibility of catalytic converter damage:

- Do not shut off the engine or interrupt the ignition, when the transmission is in gear and the vehicle is in motion.
- Do not try to start the engine by pushing or towing the vehicle.
- Do not idle the engine with any spark plug wires disconnected or removed, such as when diagnostic testing, or for prolonged periods during very rough idle or malfunctioning operating conditions.

Cooling System

WARNING!

- **When working near the radiator cooling fan, disconnect the fan motor lead or turn the ignition switch to the LOCK position. The fan is temperature controlled and can start at anytime the ignition switch is in the ON position.**
- **You or others can be badly burned by hot engine coolant (antifreeze) or steam from your radiator. If you see or hear steam coming from under the hood, do not open the hood until the radiator has had time to cool. Never try to open a cooling system pressure cap when the radiator is hot.**

Coolant Checks

Check engine coolant (antifreeze) protection every 12 months (before the onset of freezing weather, where applicable). If the engine coolant (antifreeze) is dirty or rusty in appearance, the system should be drained, flushed, and refilled with fresh engine coolant (antifreeze). Check the front of the A/C condenser for any accumulation of bugs, leaves, etc. If dirty, clean by gently spraying water from a garden hose vertically down the face of the condenser.

Check the coolant recovery bottle tubing for brittle rubber, cracking, tears, cuts, and tightness of the connection at the bottle and radiator. Inspect the entire system for leaks.

Cooling System – Drain, Flush, And Refill

If the engine coolant (antifreeze) is dirty or contains a considerable amount of sediment, clean and flush with a reliable cooling system cleaner. Follow with a thorough rinsing to remove all deposits and chemicals. Properly dispose of the old engine coolant (antifreeze) solution.

Refer to the “Maintenance Schedule” for the proper maintenance intervals.

Selection Of Coolant

Refer to “Fluids, Lubricants, and Genuine Parts” in “Maintaining Your Vehicle” for further information.

CAUTION!

- **Mixing of engine coolant (antifreeze) other than specified Organic Additive Technology (OAT) engine coolant (antifreeze), may result in engine damage and may decrease corrosion protection. Organic Additive Technology (OAT) engine coolant is different and should not be mixed with Hybrid Organic Additive Technology (HOAT) engine coolant (antifreeze). If a non-OAT engine coolant (antifreeze) is introduced into the cooling system in an emergency, it should be replaced with the specified engine coolant (antifreeze) as soon as possible.**

(Continued)

CAUTION! (Continued)

- **Do not use water alone or alcohol-based engine coolant (antifreeze) products. Do not use additional rust inhibitors or antirust products, as they may not be compatible with the radiator engine coolant and may plug the radiator.**
- **This vehicle has not been designed for use with propylene glycol-based engine coolant (antifreeze). Use of propylene glycol-based engine coolant (antifreeze) is not recommended.**

Adding Coolant

Your vehicle has been built with an improved engine coolant (antifreeze) that allows extended maintenance intervals. This engine coolant (antifreeze) can be used up to ten years or 150,000 miles (240,000 km) before replacement. To prevent reducing this extended maintenance

period, it is important that you use the same engine coolant (antifreeze) throughout the life of your vehicle.

Please review these recommendations for using Organic Additive Technology (OAT) engine coolant (antifreeze). When adding engine coolant (antifreeze):

- The manufacturer recommends using MOPAR® Antifreeze/Coolant 10 Year/150,000 Mile Formula OAT (Organic Additive Technology) or equivalent.
- Mix a minimum solution of 50% OAT engine coolant and distilled water. Use higher concentrations (not to exceed 70%) if temperatures below –34° F (–37° C) are anticipated.
- Use only high purity water such as distilled or deionized water when mixing the water/engine coolant (antifreeze) solution. The use of lower quality water will reduce the amount of corrosion protection in the engine cooling system.

Please note that it is the owner's responsibility to maintain the proper level of protection against freezing according to the temperatures occurring in the area where the vehicle is operated.

NOTE: Mixing engine coolant (antifreeze) types is not recommended and can result in cooling system damage. Drain, flush, and refill as soon as possible to avoid damage if coolant types are mixed in an emergency.

Cooling System Pressure Cap

The cap must be fully tightened to prevent loss of engine coolant (antifreeze), and to ensure that engine coolant (antifreeze) will return to the radiator from the coolant recovery tank.

The cap should be inspected and cleaned if there is any accumulation of foreign material on the sealing surfaces.

WARNING!

- **The warning words "DO NOT OPEN HOT" on the cooling system pressure cap are a safety precaution. Never add engine coolant (antifreeze) when the engine is overheated. Do not loosen or remove the cap to cool an overheated engine. Heat causes pressure to build up in the cooling system. To prevent scalding or injury, do not remove the pressure cap while the system is hot or under pressure.**
- **Do not use a pressure cap other than the one specified for your vehicle. Personal injury or engine damage may result.**

Disposal Of Used Engine Coolant

Used ethylene glycol-based engine coolant (antifreeze) is a regulated substance requiring proper disposal. Check with your local authorities to determine the disposal rules for your community. To prevent ingestion by animals or children, do not store ethylene glycol-based engine coolant in open containers or allow it to remain in puddles on the ground. If ingested by a child or pet, seek emergency assistance immediately. Clean up any ground spills immediately.

Coolant Level

Four-Cylinder Engines – the coolant bottle provides a quick visual method for determining that the engine coolant (antifreeze) level is adequate. With the engine idling and warm to normal operating temperature, the level of the engine coolant (antifreeze) in the bottle should be between the "ADD" and "FULL" lines, shown on the bottle.

Six-Cylinder Engines – the level of the engine coolant (antifreeze) in the pressurized coolant bottle should be between the "COLD" and "FULL" range on the bottle when the engine is cold.

The radiator normally remains completely full, so there is no need to remove the radiator cap unless checking for engine coolant (antifreeze) freeze point or replacing coolant. Advise your service attendant of this. As long as the engine operating temperature is satisfactory, the coolant bottle need only be checked once a month. When additional engine coolant (antifreeze) is needed to maintain the proper level, it should be added to the coolant bottle. Do not overfill.

Points To Remember

NOTE: When the vehicle is stopped after a few miles/kilometers of operation, you may observe vapor coming from the front of the engine compartment. This is normally a result of moisture from rain, snow, or high humidity accumulating on the radiator and being vaporized when the thermostat opens, allowing hot engine coolant (antifreeze) to enter the radiator.

If an examination of your engine compartment shows no evidence of radiator or hose leaks, the vehicle may be safely driven. The vapor will soon dissipate.

- Do not overfill the coolant expansion bottle.
- Check the coolant freeze point in the radiator and in the coolant expansion bottle. If engine coolant (antifreeze) needs to be added, the contents of the coolant expansion bottle must also be protected against freezing.
- If frequent engine coolant (antifreeze) additions are required, the cooling system should be pressure tested for leaks.
- Maintain engine coolant (antifreeze) concentration at 50% OAT engine coolant (antifreeze) (minimum) and distilled water for proper corrosion protection of your engine which contains aluminum components.

- Make sure that the coolant expansion bottle overflow hoses are not kinked or obstructed.
- Keep the front of the radiator clean. If your vehicle is equipped with air conditioning, keep the front of the condenser clean.
- Do not change the thermostat for Summer or Winter operation. If replacement is ever necessary, install ONLY the correct type thermostat. Other designs may result in unsatisfactory engine coolant (antifreeze) performance, poor gas mileage, and increased emissions.

Brake System

In order to assure brake system performance, all brake system components should be inspected periodically. Refer to the "Maintenance Schedule" for the proper maintenance intervals.

WARNING!

Riding the brakes can lead to brake failure and possibly a collision. Driving with your foot resting or riding on the brake pedal can result in abnormally high brake temperatures, excessive lining wear, and possible brake damage. You would not have your full braking capacity in an emergency.

Master Cylinder – Brake Fluid Level Check

Check the fluid level in the master cylinder immediately if the brake system warning light indicates system failure.

Check the fluid level in the master cylinder when performing underhood services.

Clean the top of the master cylinder area before removing the cap. If necessary, add fluid to bring the fluid level up to the requirements described on the brake fluid reservoir.

Overfilling of fluid is not recommended because it may cause leaking in the system.

Fluid level can be expected to fall as the brake pads wear. Brake fluid level should be checked when pads are replaced. However, low fluid level may be caused by a leak and a checkup may be needed.

Use only manufacturer's recommended brake fluid. Refer to "Fluids, Lubricants, and Genuine Parts" in "Maintaining Your Vehicle" for further information.

WARNING!

- **Use only manufacturer's recommended brake fluid. Refer to "Fluids, Lubricants, and Genuine Parts" in "Maintaining Your Vehicle" for further information. Using the wrong type of brake fluid can severely damage your brake system and/or impair its performance. The proper type of brake fluid for your vehicle is also identified on the original factory installed hydraulic master cylinder reservoir.**

(Continued)

WARNING! (Continued)

- **To avoid contamination from foreign matter or moisture, use only new brake fluid or fluid that has been in a tightly closed container. Keep the master cylinder reservoir cap secured at all times. Brake fluid in a open container absorbs moisture from the air resulting in a lower boiling point. This may cause it to boil unexpectedly during hard or prolonged braking, resulting in sudden brake failure. This could result in a collision.**
- **Overfilling the brake fluid reservoir can result in spilling brake fluid on hot engine parts, causing the brake fluid to catch fire. Brake fluid can also damage painted and vinyl surfaces, care should be taken to avoid its contact with these surfaces.**

(Continued)

WARNING! (Continued)

- **Do not allow petroleum based fluid to contaminate the brake fluid. Brake seal components could be damaged, causing partial or complete brake failure. This could result in a collision.**

Automatic Transmission

Selection Of Lubricant

It is important to use the proper transmission fluid to ensure optimum transmission performance and life. Use only the manufacturer's recommended transmission fluid. Refer to "Fluids, Lubricants, and Genuine Parts" in "Maintaining Your Vehicle" for further fluid specifications. It is important to maintain the transmission fluid at the correct level using the recommended fluid.

NOTE: No chemical flushes should be used in any transmission; only the approved lubricant should be used.

CAUTION!

Using a transmission fluid other than the manufacturer's recommended fluid may cause deterioration in transmission shift quality and/or torque converter shudder. Using a transmission fluid other than the manufacturer's recommended fluid will require more frequent fluid and filter changes. Refer to "Fluids, Lubricants, and Genuine Parts" in "Maintaining Your Vehicle" for further information.

Special Additives

Automatic Transmission Fluid (ATF) is an engineered product and its performance may be impaired by supplemental additives. Therefore, do not add any fluid additives to the transmission. The only exception to this policy is the use of special dyes for diagnosing fluid leaks. Avoid using transmission sealers as they may adversely affect seals.

CAUTION!

- **Using a transmission fluid other than the manufacturer's recommended fluid may cause deterioration in transmission shift quality and/or torque converter shudder. Using a transmission fluid other than that recommended by the manufacturer, and will require more frequent fluid and filter changes. Refer to "Fluids, Lubricants, and Genuine Parts" in "Maintaining Your Vehicle" for further fluid specification.**
- **If a transmission fluid leak occurs, visit your authorized dealer immediately. Severe transmission damage may occur. Your authorized dealer has the proper tools to adjust the fluid level accurately.**

Fluid Level Check – Four-Speed Transmission

Use the following procedure to check the transmission fluid level properly:

1. Park the vehicle on level ground.
2. Run the engine at normal idle speed for at least 60 seconds, and leave the engine running for the rest of this procedure.
3. Fully apply the parking brake, and press the brake pedal.
4. Place the shift lever momentarily into each gear position (allowing time for the transmission to fully engage in each position), ending with the shift lever in PARK.
5. Wipe the area around the dipstick clean to prevent dirt from entering the transmission.

6. Remove the dipstick and determine if the fluid is hot or cold. Hot fluid is approximately 180° F (82° C), which is the normal operating temperature after the vehicle is driven at least 15 miles (24 km). Hot fluid cannot be held comfortably between the fingertips. Cold fluid is at a temperature of approximately 80° F (27° C).

7. Wipe the dipstick clean and reinsert it until seated. Then, remove the dipstick and note the fluid level on both sides. The fluid level reading is only valid if there is a solid coating of oil on both sides of the dipstick. Note that the holes in the dipstick will be full of fluid if the actual level is at or above the hole.
   - If the fluid is hot, the fluid level should be in the crosshatched area marked "HOT" (between the upper two holes in the dipstick).
   - If the fluid is cold, the fluid level should be between the lower two holes in the area marked "COLD."

   If the fluid level is low, add fluid through the dipstick tube to bring it to the proper level. Do not overfill. After adding any quantity of oil through the dipstick tube, wait at least two minutes for the oil to fully drain into the transmission before rechecking the fluid level.

8. Check for leaks. Release the parking brake.

To prevent dirt and water from entering the transmission after checking or replenishing fluid, make sure that the dipstick cap is properly reseated.

CAUTION!

- **Using a transmission fluid other than the manufacturer's recommended fluid may cause deterioration in transmission shift quality and/or torque converter shudder, and will require more frequent fluid and filter changes. Refer to "Fluids, Lubricants, and Genuine Parts" in "Maintaining Your Vehicle" for fluid specifications.**
- **Dirt and water in the transmission can cause serious damage. To prevent dirt and water from entering the transmission after checking or replenishing fluid, make sure that the dipstick cap is re-seated properly.**

Fluid Level Check – Six-Speed Transmission

The fluid level is preset at the factory and does not require adjustment under normal operating conditions. Routine fluid level checks are not required, therefore the transmission has no dipstick. Your authorized dealer can check your transmission fluid level using a special service dipstick. If you notice fluid leakage or transmission malfunction, visit your authorized dealer immediately to have the transmission fluid level checked. Operating the vehicle with an improper fluid level can cause severe transmission damage.

Fluid And Filter Changes

Refer to the "Maintenance Schedule" for the proper maintenance intervals.

In addition, change the fluid and filter if the transmission is disassembled for any reason.

Appearance Care And Protection From Corrosion

Protection Of Body And Paint From Corrosion

Vehicle body care requirements vary according to geographic locations and usage. Chemicals that make roads

passable in snow and ice and those that are sprayed on trees and road surfaces during other seasons are highly corrosive to the metal in your vehicle. Outside parking, which exposes your vehicle to airborne contaminants, road surfaces on which the vehicle is operated, extreme hot or cold weather and other extreme conditions will have an adverse effect on paint, metal trim, and underbody protection.

The following maintenance recommendations will enable you to obtain maximum benefit from the corrosion resistance built into your vehicle.

What Causes Corrosion?

Corrosion is the result of deterioration or removal of paint and protective coatings from your vehicle.

The most common causes are:

- Road salt, dirt and moisture accumulation.
- Stone and gravel impact.
- Insects, tree sap and tar.
- Salt in the air near seacoast localities.
- Atmospheric fallout/industrial pollutants.

Washing

- Wash your vehicle regularly. Always wash your vehicle in the shade using MOPAR® Car Wash or equivalent, or a mild car wash soap, and rinse the panels completely with clear water.
- If insects, tar, or other similar deposits have accumulated on your vehicle, use MOPAR® Super Kleen Bug and Tar Remover or equivalent to remove.
- Use a high quality cleaner wax, such as MOPAR® Cleaner Wax or equivalent, to remove road film, stains and to protect your paint finish. Take care never to scratch the paint.
- Avoid using abrasive compounds and power buffing that may diminish the gloss or thin out the paint finish.

CAUTION!

- **Do not use abrasive or strong cleaning materials such as steel wool or scouring powder that will scratch metal and painted surfaces.**
- **Use of power washers exceeding 1,200 psi (8 274 kPa) can result in damage or removal of paint and decals.**

Special Care

- If you drive on salted or dusty roads or if you drive near the ocean, hose off the undercarriage at least once a month.
- It is important that the drain holes in the lower edges of the doors, rocker panels, and trunk be kept clear and open.
- If you detect any stone chips or scratches in the paint, touch them up immediately. The cost of such repairs is considered the responsibility of the owner.
- If your vehicle is damaged due to a collision or similar cause that destroys the paint and protective coating, have your vehicle repaired as soon as possible. The cost of such repairs is considered the responsibility of the owner.
- If you carry special cargo such as chemicals, fertilizers, de-icer salt, etc., be sure that such materials are well packaged and sealed.
- If a lot of driving is done on gravel roads, consider mud or stone shields behind each wheel.
- Use MOPAR® Touch Up Paint or equivalent on scratches as soon as possible. Your authorized dealer has touch up paint to match the color of your vehicle.

Wheel And Wheel Trim Care

- All wheels and wheel trim, especially aluminum and chrome plated wheels, should be cleaned regularly with a mild soap and water to prevent corrosion.
- To remove heavy soil and/or excessive brake dust, use MOPAR® Wheel Cleaner or equivalent or select a non-abrasive, non-acidic cleaner.

CAUTION!

Do not use scouring pads, steel wool, a bristle brush, or metal polishes. Do not use oven cleaner. These products may damage the wheel's protective finish. Avoid automatic car washes that use acidic solutions or harsh brushes that may damage the wheel's protective finish. Only MOPAR® Wheel Cleaner or equivalent is recommended.

Cleaning Headlights

Your vehicle has plastic headlights that are lighter and less susceptible to stone breakage than glass headlights.

Plastic is not as scratch resistant as glass and therefore different lens cleaning procedures must be followed.

To minimize the possibility of scratching the lenses and reducing light output, avoid wiping with a dry cloth. To remove road dirt, wash with a mild soap solution followed by rinsing.

Do not use abrasive cleaning components, solvents, steel wool or other aggressive material to clean the lenses.

Stain Repel Fabric Cleaning Procedure – If Equipped

Stain Repel seats may be cleaned in the following manner:

- Remove as much of the stain as possible by blotting with a clean, dry towel.
- Blot any remaining stain with a clean, damp towel.
- For tough stains, apply MOPAR® Total Clean or equivalent, or a mild soap solution to a clean, damp cloth and remove stain. Use a fresh, damp towel to remove soap residue.
- For grease stains, apply MOPAR® Multi-Purpose Cleaner or equivalent to a clean, damp cloth and remove stain. Use a fresh, damp towel to remove soap residue.
- Do not use any harsh solvents or any other form of protectants on Stain Repel products.

Interior Care

Instrument Panel Cover

The instrument panel cover has a low glare surface, which minimizes reflections in the windshield. Do not use protectants or other products, which may cause undesirable reflections. Use soap and warm water to restore the low glare surface.

Cleaning Interior Trim

Interior Trim should be cleaned starting with a damp cloth, a damp cloth with MOPAR® Total Clean or equivalent, then MOPAR® Spot & Stain Remover or equivalent if absolutely necessary. Do not use harsh cleaners or Armor All®. Use MOPAR® Total Clean or equivalent to clean vinyl upholstery

Cleaning Leather Upholstery

MOPAR® Total Clean or equivalent is specifically recommended for leather upholstery.

Your leather upholstery can be best preserved by regular cleaning with a damp soft cloth. Small particles of dirt can act as an abrasive and damage the leather upholstery and should be removed promptly with a damp cloth. Stubborn soils can be removed easily with a soft cloth and MOPAR® Total Clean or equivalent. Care should be taken to avoid soaking your leather upholstery with any liquid. Please do not use polishes, oils, cleaning fluids, solvents, detergents, or ammonia-based cleaners to clean your leather upholstery. Application of a leather conditioner is not required to maintain the original condition.

WARNING!

Do not use volatile solvents for cleaning purposes. Many are potentially flammable, and if used in closed areas they may cause respiratory harm.

Glass Surfaces

All glass surfaces should be cleaned on a regular basis with MOPAR® Glass Cleaner or equivalent, or any commercial household-type glass cleaner. Never use an abrasive type cleaner. Use caution when cleaning the inside rear window equipped with electric defrosters or the right rear quarter window equipped with the radio antenna. Do not use scrapers or other sharp instrument that may scratch the elements.

When cleaning the rear view mirror, spray cleaner on the towel or rag that you are using. Do not spray cleaner directly on the mirror.

Cleaning Plastic Instrument Cluster Lenses

The lenses in front of the instruments in this vehicle are molded in clear plastic. When cleaning the lenses, care must be taken to avoid scratching the plastic.

1. Clean with a wet soft rag. A mild soap solution may be used, but do not use high alcohol content or abrasive cleaners. If soap is used, wipe clean with a clean damp rag.
2. Dry with a soft cloth.

Seat Belt Maintenance

Do not bleach, dye, or clean the belts with chemical solvents or abrasive cleaners. This will weaken the fabric. Sun damage can also weaken the fabric.

If the belts need cleaning, use MOPAR® Total Clean or equivalent, a mild soap solution, or lukewarm water. Do not remove the belts from the vehicle to wash them. Dry with a soft cloth.

Replace the belts if they appear frayed or worn or if the buckles do not work properly.

Cleaning Center Console Cupholders

Removal

Grab the rubber portion of the cupholder and lift upward.

Cleaning

Soak the rubber cupholder liner in a mixture of medium hot tap water and one teaspoon of mild liquid dish soap. Let soak for approximately one hour. After one hour pull the liner from the water and dip it back into the water about six times. This will loosen any remaining debris. Rinse the liner thoroughly under warm running water. Shake the excess water from the liner and dry the outer surfaces with a clean soft cloth.

Installation

Align the liner in the cupholder and press down firmly.

Convertible Top Care

CAUTION!

Failure to follow these cautions may cause interior water damage, stains or mildew on the top material:

- **Avoid high-pressure car washes, as they can damage the top material. Also, increased water pressure may force past the weather strips.**
- **Remove any standing water from the top and dry the surface before opening it. Operating the top, opening a door or lowering a window while the top is wet may allow water to drip into the vehicles interior.**

(Continued)

CAUTION! (Continued)

- **Use care when washing the vehicle, water pressure directed at the weather strip seals may cause water to leak into the vehicles interior.**

Immediate removal of any contaminant is recommended. Regular washing of the top will enhance its life and appearance, and make successive cleanings easier. Do not subject the top to excessive heat. Frequently vacuum the top and storage compartment.

Washing

Hand washing is highly recommended. Automatic car washing equipment can damage the top material. If you must use an automatic car wash, soft cloth systems are preferred.

CAUTION!

Avoid high-pressure car washes, as they can damage the top material. Also, increased water pressure may force water past the weather strips.

General Cleaning

Careful vacuuming of the top before washing is helpful in removing dust and other foreign particles. Wash in partial shade instead of direct sun. Wet the entire vehicle before washing the top. The top should be washed with a soft, natural bristle scrub brush, and a mild soap solution such as liquid dishwashing soap. Do not use detergent.

CAUTION!

Never use an abrasive type cleaner or bleaches. Cleaners should not contain silicones, organic solvents, petroleum distillates, or plasticizers. Always wait until the top is thoroughly dry before lowering it into the storage area.

Scrub in all directions, covering an area of about two square feet at a time. Avoid heavy scrubbing. Rinse the entire vehicle with water to remove all soap and dirt from the top fabric and to prevent streaking on painted and chrome surfaces. Allow the top to dry before lowering. Vacuuming the top with a wet/dry shop vacuum will decrease the top's drying time, ensure removal of all dirt, and delete streaks in the material. Multiple cleanings may be necessary to remove stubborn stains. If stains persist, contact your local dealership for further suggestions.

Additional Cleaning Procedure

For additional cleaning assistance in removing stubborn stains, apply MOPAR® Convertible Cloth Top Cleaner or equivalent to the complete stain, extending 2 inches (50 mm) beyond the stain. With a soft bristle brush, scrub in all directions over the stain. Avoid heavy scrubbing. Rinse the area with warm water. If the stain is still apparent, repeat the cleaning procedure. When the stain is no longer showing, rinse the complete top with warm water. Let the top dry before lowering it.

Protection

For appearance purposes, you may wish to protect your cloth top periodically. A fabric protectant such as Scotchguard® is suggested. The top should be clean and dry before application of the protectant.

CAUTION!

Avoid getting Scotchguard® on the surrounding weather strips, moldings, paint, or glass. Damage to these items might occur.

Weather Strip Care – Soft And Hard Top

Lubricate all top and door glass weather strips periodically with MOPAR® Weather Strip Lubricant or equivalent to keep them soft and pliable.

FUSES

Integrated Power Module

The Integrated Power Module is located in the engine compartment near the air cleaner assembly. This center contains cartridge fuses and mini fuses. A label that identifies each component may be printed on the inside of the cover. Refer to the graphic below for FUSES/TIPM location.

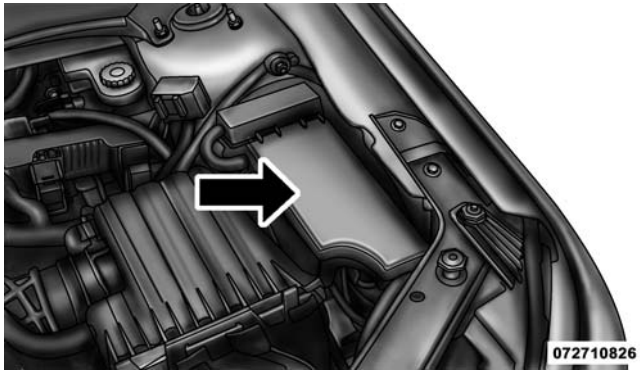

Integrated Power Module

Cavity	Car-tridge Fuse	Mini Fuse	Description
1	40 Amp Green	—	Power Top Module – If Equipped
2	—	20 Amp Yellow	Brake Vacuum Pump
3	—	10 Amp Red	Center High Mounted Stop Light (CHMSL)/ Brake Switch
4	—	10 Amp Red	Ignition Switch
5	—	20 Amp Yellow	Trailer Tow – If Equipped
6	—	10 Amp Red	Power Mirror Switch/Climate Controls

Cavity	Car-tridge Fuse	Mini Fuse	Description
7	—	30 Amp Green	Ignition Off Draw (IOD) Sense 1
8	—	30 Amp Green	Ignition Off Draw (IOD) Sense 2
9	40 Amp Green		Battery Feed – Power Seats – If Equipped
10	—	20 Amp Yellow	Instrument Panel/ Power Locks/ Interior Lights
11	—	15 Amp Lt Blue	Selectable Power Outlet (Inside Center Arm Rest)

Cavity	Car-tridge Fuse	Mini Fuse	Description
12	—	20 Amp Yellow	—
13	—	20 Amp Yellow	Ignition/Cigar Lighter
14	—	10 Amp Red	Instrument Panel
15	40 Amp Green	—	Radiator Fan Relay
16	—	15 Amp Lt. Blue	Sunroof – If Equipped

Cavity	Car-tridge Fuse	Mini Fuse	Description
17	—	10 Amp Red	Wireless Control Module (WCM)/ Clock/Steering Control Module (SCM)
18	40 Amp Green	—	Auto Shutdown (ASD) Relay
19	—	20 Amp Yellow	Audio Amplifier – If Equipped
20	—	15 Amp Lt. Blue	Radio
21	—	10 Amp Red	Siren – If Equipped

Cavity	Car-tridge Fuse	Mini Fuse	Description
22	—	10 Amp Red	Ignition Run – Climate Controls/Hot Cupholder – If Equipped
23	—	15 Amp Lt. Blue	Auto Shutdown (ASD) Relay 3
24	—	25 Amp Natural	Sunroof – If Equipped
25	—	10 Amp Red	Ignition Run — Heated Mirrors - If Equipped
26	—	15 Amp Lt. Blue	Auto Shutdown (ASD) Relay 2

Cavity	Car-tridge Fuse	Mini Fuse	Description
27	—	10 Amp Red	Ignition Run – Occupant Classification Module (OCM)/Occupant Restraint Controller (ORC)
28	—	10 Amp Red	Ignition Run — Occupant Classification Module (OCM)/Occupant Restraint Controller (ORC)
29	—	—	Hot Car (No Fuse Required)

Cavity	Car-tridge Fuse	Mini Fuse	Description
30	—	20 Amp Yellow	Ignition Run – Heated Seats – If Equipped
31	—	—	Spare
32	30 Amp Pink	—	Auto Shutdown (ASD) Relay 1
33	—	10 Amp Red	Switch Bank/ Diagnostic Link Connector/ Powertrain Control Module (PCM)

Cavity	Car-tridge Fuse	Mini Fuse	Description
34	30 Amp Pink	—	Anti-Lock Brakes (ABS) Module – If Equipped/ Electronic Stability Control (ESC) Module – If Equipped
35	40 Amp Green	—	Anti-Lock Brakes (ABS) Module – If Equipped/ Electronic Stability Control (ESC) Module – If Equipped
36	30 Amp Pink	—	Passenger Door Module (PDM)/ Driver Door Module (DDM)
37	—	25 Amp Natural	Power Top Module – If Equipped

CAUTION!

- **When installing the Integrated Power Module cover, it is important to ensure the cover is properly positioned and fully latched. Failure to do so may allow water to get into the Integrated Power Module, and possibly result in an electrical system failure.**
- **When replacing a blown fuse, it is important to use only a fuse having the correct amperage rating. The use of a fuse with a rating other than indicated may result in a dangerous electrical system overload. If a properly rated fuse continues to blow, it indicates a problem in the circuit that must be corrected.**

VEHICLE STORAGE

If you will not be using your vehicle for more than 21 days, you may want to take steps to preserve your battery.

- Disengage the mini-fuse in the Power Distribution Center labeled IOD (Ignition Off-Draw).
- Or disconnect the negative cable from the battery.
- Anytime you store your vehicle, or keep it out of service (i.e., vacation) for two weeks or more, run the air conditioning system at idle for about five minutes in the fresh air and high blower setting. This will ensure adequate system lubrication to minimize the possibility of compressor damage when the system is started again.

REPLACEMENT BULBS

Interior Bulbs

	Bulb Number
Front Courtesy/Reading Lamp	578/W5W
Center Courtesy/Reading Lamp	578/W5W
Visor Vanity Lamp	A6220
Glove Box Lamp	A6220
Shift Indicator Lamp	IKLE14140
Rear Compartment (Trunk) Lamp	579
NOTE: For lighted switches, see your authorized dealer for replacement.	

Exterior Bulbs

	Bulb Number
Bi-Halogen Headlamp	HIR2
Front Turn Signal Lamp	3157NAK
Front Park Lamp	LED (Serviced at Authorized Dealer)
Front Fog Lamp	H11
Center High Mounted Stop (CHMSL) Lamp	LED (Serviced at Authorized Dealer)
Rear Tail/Stop/Turn Signal Lamp	LED (Serviced at Authorized Dealer)
Backup Lamp	921
License Lamp	W5W

BULB REPLACEMENT

Headlamp

1. Raise and prop open the hood. Locate the connector behind the headlamp.

NOTE: It may be necessary to remove the air cleaner filter housing and position the totally integrated power module aside prior to replacing the low beam headlamp on the driver's side of the vehicle.

2. Reach into engine compartment and from behind the lamp assembly and grasp the connector.

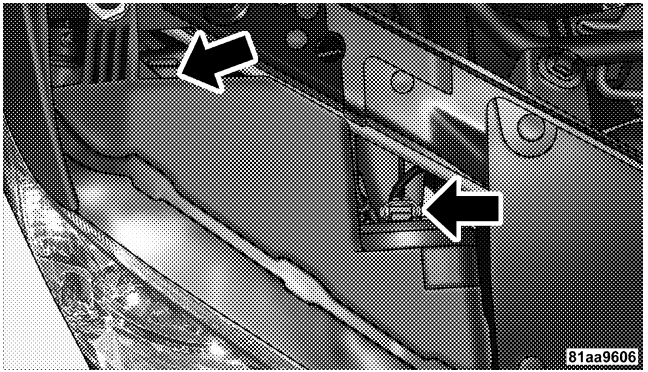

3. Rotate bulb and connector one-quarter turn and pull outward from assembly.

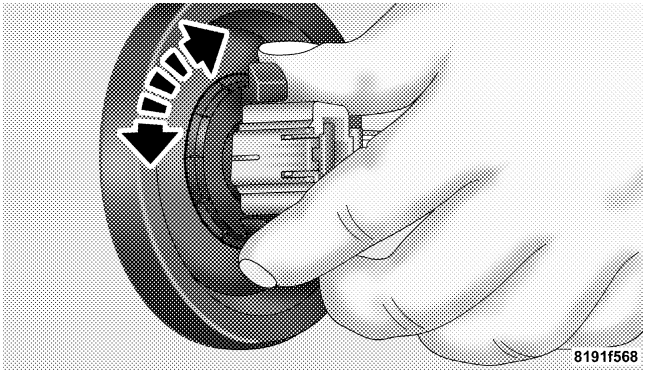

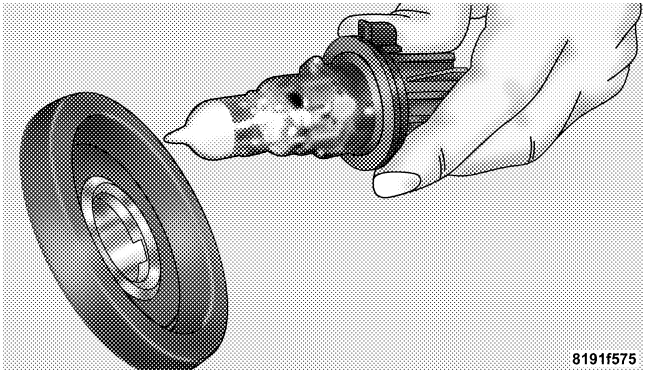

CAUTION!

Do not touch the new bulb with your fingers. Oil contamination will severely shorten bulb life.

4. Pull the bulb out of the socket and replace the bulb.
5. If the bulb comes in contact with any oily surface, clean the bulb with rubbing alcohol.
6. Reinsert the bulb and socket assembly and rotate clockwise one-quarter turn to secure.

Front Turn Signal

1. Raise and prop open the hood.
2. Rotate the bulb's electrical connector one-quarter turn counterclockwise and remove it from the headlamp housing.
3. Remove the bulb from the connector socket and install the replacement bulb.
4. Install the bulb and connector assembly into the headlamp housing and rotate the connector one-quarter turn clockwise to lock it in place.

Front Fog Lamp

NOTE: Access to the lamps through the lower fascia cutout is limited. We recommend you access the lamps by turning the steering wheel to allow access and remove the inner fender shield.

1. Rotate the bulb's electrical connector one-quarter turn counterclockwise and remove it from the fog lamp housing.
2. Remove the bulb from the connector socket and install the replacement bulb.

CAUTION!

Do not touch the new bulb with your fingers. Oil contamination will severely shorten bulb life. If the bulb comes in contact with an oily surface, clean the bulb with rubbing alcohol.

3. Install the bulb and connector assembly into the fog lamp housing and rotate the connector one-quarter turn clockwise to lock it in place.

Backup Lamps

1. Open the trunk and gently pull back the trunk liner behind the tail lamp (requires removal of a push pin holding the trunk trim in place near the tail lamp).
2. Remove the two plastic wing nuts from the tail lamp housing.

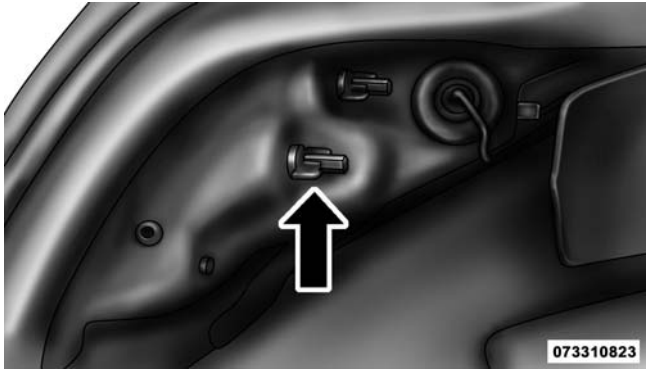

NOTE: Placing a small flat head screwdriver or similar tool between the lamp outboard ball stud and plastic grommet from inside the trunk can help to disengage the outboard edge of the tail lamp.

3. Grasp the tail lamp by both the outboard and inboard sides, and pull firmly to disengage the tail lamp from the vehicle.

NOTE: It is normal to hear a loud sound when the lower tail lamp area unsnaps from the vehicle mounting bracket during tail lamp removal.

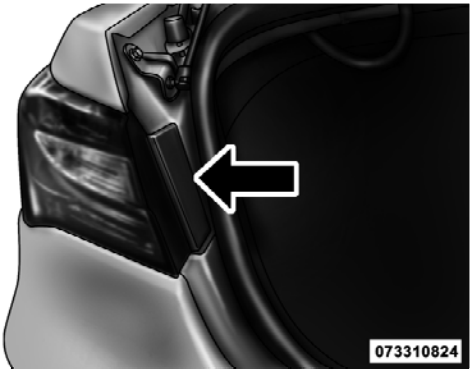

4. Twist and remove socket from lamp.
5. Remove bulb from socket and replace.
6. Reinstall the tail lamp, fasteners, and trunk liner.

License Plate Lamp

1. Using a small screwdriver, press inward the locking tab on the side of the lamp assembly and pull down on the lamp assembly for removal.
2. Pull bulb from socket, replace, and reinstall the lamp assembly into place ensuring the locking tab is secure.

FLUID CAPACITIES

	U.S.	Metric
Fuel (Approximate)		
All Engines — (Except 2.4L PZEV)	16.9 Gallons	64 Liters
2.4L PZEV (Partial Zero Emissions Vehicle)	18.5 Gallons	70 Liters
Engine Oil With Filter		
2.4L Engine (SAE 5W-20, API Certified)	4.5 Quarts	4.4 Liters
3.6L Engine (SAE 5W-20, API Certified)	6 Quarts	5.6 Liters
Cooling System*		
2.4L Engine (MOPAR® Antifreeze/Engine Coolant 10 Year/ 150,000 Mile Formula or equivalent)	7.7 Quarts	7.3 Liters
3.6L Engine (MOPAR® Antifreeze/Engine Coolant 10 Year/ 150,000 Mile Formula or equivalent)	11.6 Quarts	11 Liters
* Includes heater and coolant recovery bottle filled to MAX level.		

FLUIDS, LUBRICANTS AND GENUINE PARTS

Engine

Component	Fluid, Lubricant, or Genuine Part
Engine Coolant	MOPAR® Antifreeze/Coolant 10 Year/150,000 Mile Formula OAT (Organic Additive Technology) or equivalent meeting the requirements of Chrysler Material Standard MS-12106.
Engine Oil – 2.4L Engine	Use API Certified SAE 5W-20 Engine Oil, meeting the requirements of Chrysler Material Standard MS-6395. Refer to your engine oil filler cap for correct SAE grade.
Engine Oil – 3.6L Engine	Use API Certified SAE 5W-20 Engine Oil, meeting Chrysler Material Standard MS-6395. Refer to your engine oil filler cap for correct SAE grade.
Engine Oil Filter	MOPAR® Engine Oil Filter or equivalent.
Spark Plugs – 2.4L Engine except PZEV*	ZFR5F-11 (Gap 0.043 in [1.1 mm])
Spark Plugs – 2.4L with PZEV*	ZFR5AP (Gap 0.031 in [0.8 mm])

Component	Fluid, Lubricant, or Genuine Part
Spark Plugs – 3.6L Engine	RER8ZWYCB4 (Gap 0.043 in [1.1 mm])
Fuel Selection	87 Octane
* PZEV = Partial Zero Emission Vehicle	

Chassis

Component	Fluid, Lubricant, or Genuine Part
Automatic Transmission	MOPAR® ATF+4® Automatic Transmission Fluid or equivalent licensed ATF+4® product.
Brake Master Cylinder	MOPAR® DOT 3 and SAE J1703 should be used. If DOT 3 brake fluid is not available, then DOT 4 is acceptable. Use only recommended brake fluids.
Power Steering Reservoir	MOPAR® Power Steering Fluid +4, MOPAR® ATF+4® Automatic Transmission Fluid or equivalent licensed ATF+4® product.

MAINTENANCE SCHEDULES

CONTENTS

■ MAINTENANCE SCHEDULE 480

□ Maintenance Chart. 482

MAINTENANCE SCHEDULE

Your vehicle is equipped with an automatic oil change indicator system. The oil change indicator system will remind you that it is time to take your vehicle in for scheduled maintenance.

Based on engine operation conditions, the oil change indicator message will illuminate. This means that service is required for your vehicle. Operating conditions such as frequent short-trips, trailer tow, extremely hot or cold ambient temperatures, and E85 fuel usage will influence when the "Oil Change Required" message is displayed. Severe Operating Conditions can cause the change oil message to illuminate as early as 3,500 miles (5,600 km) since last reset. Have your vehicle serviced as soon as possible, within the next 500 miles (805 km).

Your authorized dealer will reset the oil change indicator message after completing the scheduled oil change. If a scheduled oil change is performed by someone other than your authorized dealer, the message can be reset by referring to the steps described under "Electronic Vehicle Information Center (EVIC)/Oil Change Required" in "Understanding Your Instrument Panel" for further information

NOTE: Under no circumstances should oil change intervals exceed 10,000 miles (16,000 km) or twelve months, whichever comes first.

Once A Month Or Before A Long Trip:

- Check engine oil level
- Check windshield washer fluid level
- Check the tire inflation pressures and look for unusual wear or damage
- Check the fluid levels of the coolant reservoir, brake master cylinder, power steering and transmission as needed
- Check function of all interior and exterior lights

Required Maintenance Intervals.

Refer to the maintenance schedules on the following page for the required maintenance intervals.

At Every Oil Change Interval As Indicated By Oil Change Indicator System:
• Change oil and filter.
• Rotate the tires. **Rotate at the first sign of irregular wear, even if it occurs before the oil indicator system turns on.**
• Inspect battery and clean and tighten terminals as required.
• Inspect automatic transmission fluid if equipped with dipstick.

At Every Oil Change Interval As Indicated By Oil Change Indicator System:
• Inspect brake pads, shoes, rotors, drums, hoses and park brake.
• Inspect engine cooling system protection and hoses.
• Inspect exhaust system.
• Inspect engine air cleaner if using in dusty or off-road conditions.

Maintenance Chart

Mileage or time passed (whichever comes first)	20,000	30,000	40,000	50,000	60,000	70,000	80,000	90,000	100,000	110,000	120,000	130,000	140,000	150,000
Or Years:	**2**	**3**	**4**	**5**	**6**	**7**	**8**	**9**	**10**	**11**	**12**	**13**	**14**	**15**
Or Kilometers:	**32,000**	**48,000**	**64,000**	**80,000**	**96,000**	**112,000**	**128,000**	**144,000**	**160,000**	**176,000**	**192,000**	**208,000**	**224,000**	**240,000**
Additional Inspections														
Inspect the CV joints.		X			X			X			X			X
Inspect front suspension, tie rod ends, boot seals and replace if necessary.	X		X		X		X		X		X		X	
Inspect the brake linings, parking brake function.	X		X		X		X		X		X		X	
Additional Maintenance														
Replace engine air filter.		X			X			X			X			X

Mileage or time passed (whichever comes first)	20,000	30,000	40,000	50,000	60,000	70,000	80,000	90,000	100,000	110,000	120,000	130,000	140,000	150,000
Or Years:	**2**	**3**	**4**	**5**	**6**	**7**	**8**	**9**	**10**	**11**	**12**	**13**	**14**	**15**
Or Kilometers:	**32,000**	**48,000**	**64,000**	**80,000**	**96,000**	**112,000**	**128,000**	**144,000**	**160,000**	**176,000**	**192,000**	**208,000**	**224,000**	**240,000**
Replace cabin/air conditioning filter.	X		X		X		X		X		X		X	
Replace spark plugs (2.4L Engine). **		X			X			X			X			X
Replace spark plugs (2.4L PZEV Engine Only). **									X					
Replace spark plugs (3.6L Engine). **									X					
Flush and replace the engine coolant at 10 years or 150,000 miles (240,000 km) whichever comes first.									X					X

Mileage or time passed (whichever comes first)	20,000	30,000	40,000	50,000	60,000	70,000	80,000	90,000	100,000	110,000	120,000	130,000	140,000	150,000
Or Years:	2	3	4	5	6	7	8	9	10	11	12	13	14	15
Or Kilometers:	32,000	48,000	64,000	80,000	96,000	112,000	128,000	144,000	160,000	176,000	192,000	208,000	224,000	240,000
Change automatic transmission fluid and filter if using your vehicle for any of the following: police, taxi, fleet, or frequent trailer towing.					X									
Change automatic transmission fluid and filter.											X			
Inspect and replace PCV valve if necessary.									X					

** The spark plug change interval is mileage based only, yearly intervals do not apply.

WARNING!

- **You can be badly injured working on or around a motor vehicle. Do only service work for which you have the knowledge and the right equipment. If you have any doubt about your ability to perform a service job, take your vehicle to a competent mechanic.**
- **Failure to properly inspect and maintain your vehicle could result in a component malfunction and effect vehicle handling and performance. This could cause an accident.**

IF YOU NEED CONSUMER ASSISTANCE

CONTENTS

- SUGGESTIONS FOR OBTAINING SERVICE FOR YOUR VEHICLE 489
  - Prepare For The Appointment. 489
  - Prepare A List 489
  - Be Reasonable With Requests 489
- IF YOU NEED ASSISTANCE 489
  - Chrysler Group LLC Customer Center. 490
  - Chrysler Canada Inc. Customer Center 490
  - In Mexico contact: 491
  - Customer Assistance For The Hearing Or Speech Impaired (TDD/TTY). 491
  - Service Contract 491
- WARRANTY INFORMATION 492
- MOPAR® PARTS 493
- REPORTING SAFETY DEFECTS 493
  - In The 50 United States And Washington, D.C.. 493
  - In Canada. 493
- PUBLICATION ORDER FORMS 494

■ DEPARTMENT OF TRANSPORTATION UNIFORM TIRE QUALITY GRADES 495

□ Treadwear. 495

□ Traction Grades 495

□ Temperature Grades. 496

SUGGESTIONS FOR OBTAINING SERVICE FOR YOUR VEHICLE

Prepare For The Appointment

If you are having warranty work done, be sure to have the right papers with you. Take your warranty folder. All work to be performed may not be covered by the warranty. Discuss additional charges with the service manager. Keep a maintenance log of your vehicle's service history. This can often provide a clue to the current problem.

Prepare A List

Make a written list of your vehicle's problems or the specific work you want done. If you've had an accident or work done that is not on your maintenance log, let the service advisor know.

Be Reasonable With Requests

If you list a number of items and you must have your vehicle by the end of the day, discuss the situation with the service advisor and list the items in order of priority. At many authorized dealer, you may obtain a rental vehicle at a minimal daily charge. If you need a rental, it is advisable to make these arrangements when you call for an appointment.

IF YOU NEED ASSISTANCE

The manufacturer and its authorized dealer are vitally interested in your satisfaction. We want you to be happy with our products and services.

Warranty service must be done by an authorized dealer. We strongly recommend that you take the vehicle to an authorized dealer. They know your vehicle the best, and are most concerned that you get prompt and high quality service. The manufacturer's authorized dealer have the

facilities, factory-trained technicians, special tools, and the latest information to ensure the vehicle is fixed correctly and in a timely manner.

This is why you should always talk to an authorized dealer service manager first. Most matters can be resolved with this process.

- If for some reason you are still not satisfied, talk to the general manager or owner of the authorized dealer. They want to know if you need assistance.
- If an authorized dealer is unable to resolve the concern, you may contact the manufacturer's customer center.

Any communication to the manufacturer's customer center should include the following information:

- Owner's name and address
- Owner's telephone number (home and office)
- Authorized dealer name
- Vehicle Identification Number (VIN)
- Vehicle delivery date and mileage

Chrysler Group LLC Customer Center

P.O. Box 21–8004

Auburn Hills, MI 48321–8004

Phone: (800) 247–9753

Chrysler Canada Inc. Customer Center

P.O. Box 1621

Windsor, Ontario N9A 4H6

Phone: (800) 465–2001 English / (800) 387–9983 French

In Mexico contact:

Av. Prolongacion Paseo de la Reforma, 1240

Sante Fe C.P. 05109

Mexico, D. F.

In Mexico City: 5081-7568

Outside Mexico City: 1-800-505-1300

Customer Assistance For The Hearing Or Speech Impaired (TDD/TTY)

To assist customers who have hearing difficulties, the manufacturer has installed special TDD (Telecommunication Devices for the Deaf) equipment at its customer center. Any hearing or speech impaired customer, who has access to a TDD or a conventional teletypewriter (TTY) in the United States, can communicate with the manufacturer by dialing 1–800–380–CHRY.

Canadian residents with hearing difficulties that require assistance can use the special needs relay service offered by Bell Canada. For TTY teletypewriter users, dial 711 and for Voice callers, dial 1 800 855-0511 to connect with a Bell Relay Service operator.

Service Contract

You may have purchased a service contract for a vehicle to help protect you from the high cost of unexpected repairs after the manufacturer's New Vehicle Limited Warranty expires. The manufacturer stands behind only the manufacturer's service contracts. If you purchased a manufacturer's service contract, you will receive Plan Provisions and an Owner Identification Card in the mail within three weeks of the vehicle delivery date. If you have any questions about the service contract, call the manufacturer's Service Contract National Customer Hotline at 1-800-521-9922 (Canadian residents, call (800) 465–2001 English / (800) 387–9983 French).

The manufacturer will not stand behind any service contract that is not the manufacturer's service contract. It is not responsible for any service contract other than the manufacturer's service contract. If you purchased a service contract that is not a manufacturer's service contract, and you require service after the manufacturer's New Vehicle Limited Warranty expires, please refer to the contract documents, and contact the person listed in those documents.

We appreciate that you have made a major investment when you purchased the vehicle. An authorized dealer has also made a major investment in facilities, tools, and training to assure that you are absolutely delighted with the ownership experience. You will be pleased with their sincere efforts to resolve any warranty issues or related concerns.

WARNING!

Engine exhaust, some of its constituents, and certain vehicle components contain, or emit, chemicals known to the State of California to cause cancer and birth defects, or other reproductive harm. In addition, certain fluids contained in vehicles and certain products of component wear contain, or emit, chemicals known to the State of California to cause cancer and birth defects, or other reproductive harm.

WARRANTY INFORMATION

See the Warranty Information Booklet, located on the DVD, for the terms and provisions of Chrysler Group LLC warranties applicable to this vehicle and market.

MOPAR® PARTS

MOPAR® fluids, lubricants, parts, and accessories are available from an authorized dealer. They are recommended for your vehicle in order to help keep the vehicle operating at its best.

REPORTING SAFETY DEFECTS

In The 50 United States And Washington, D.C.

If you believe that your vehicle has a defect that could cause a crash or cause injury or death, you should immediately inform the National Highway Traffic Safety Administration (NHTSA) in addition to notifying the manufacturer.

If NHTSA receives similar complaints, it may open an investigation, and if it finds that a safety defect exists in a group of vehicles, it may order a recall and remedy campaign. However, NHTSA cannot become involved in individual problems between you, your authorized dealer, and the manufacturer.

To contact NHTSA, you may either call the Auto Safety Hotline toll free at 1–888–327–4236 (TTY: 1–800–424–9153), or go to http://www.safercar.gov; or write to: Administrator, NHTSA, 1200 New Jersey Avenue, SE., West Building, Washington, D.C. 20590. You can also obtain other information about motor vehicle safety from http://www.safercar.gov.

In Canada

If you believe that your vehicle has a safety defect, you should contact the Customer Service Department immediately. Canadian customers who wish to report a safety defect to the Canadian government should contact Transport Canada, Motor Vehicle Defect Investigations and Recalls at 1-800-333-0510 or go to http://www.tc.gc.ca/roadsafety/

PUBLICATION ORDER FORMS

To order the following manuals, you may use either the website or the phone numbers listed below. Visa, Mastercard, American Express, and Discover orders are accepted. If you prefer mailing your payment, please call for an order form.

NOTE: A street address is required when ordering manuals (no P.O. Boxes).

Service Manuals

These comprehensive Service Manuals provide the information that students and professional technicians need in diagnosing/troubleshooting, problem solving, maintaining, servicing, and repairing Chrysler Group LLC vehicles. A complete working knowledge of the vehicle, system, and/or components is written in straightforward language with illustrations, diagrams, and charts.

Diagnostic Procedure Manuals

Diagnostic Procedure Manuals are filled with diagrams, charts and detailed illustrations. These practical manuals make it easy for students and technicians to find and fix problems on computer-controlled vehicle systems and features. They show exactly how to find and correct problems the first time, using step-by-step troubleshooting and drivability procedures, proven diagnostic tests and a complete list of all tools and equipment.

Owner's Manuals

These Owner's Manuals have been prepared with the assistance of service and engineering specialists to acquaint you with specific Chrysler Group LLC vehicles. Included are starting, operating, emergency and maintenance procedures as well as specifications, capabilities and safety tips.

Call toll free at:

- **1–800–890–4038 (U.S.)**
- **1–800–387–1143 (Canada)**

Or

Visit us on the Worldwide Web at:

- **www.techauthority.com**

DEPARTMENT OF TRANSPORTATION UNIFORM TIRE QUALITY GRADES

The following tire grading categories were established by the National Highway Traffic Safety Administration. The specific grade rating assigned by the tire's manufacturer in each category is shown on the sidewall of the tires on your vehicle.

All passenger car tires must conform to Federal safety requirements in addition to these grades.

Treadwear

The Treadwear grade is a comparative rating, based on the wear rate of the tire when tested under controlled conditions on a specified government test course. For example, a tire graded 150 would wear one and one-half times as well on the government course as a tire graded 100. The relative performance of tires depends upon the actual conditions of their use, however, and may depart significantly from the norm due to variations in driving habits, service practices, and differences in road characteristics and climate.

Traction Grades

The Traction grades, from highest to lowest, are AA, A, B, and C. These grades represent the tire's ability to stop on wet pavement, as measured under controlled conditions on specified government test surfaces of asphalt and concrete. A tire marked C may have poor traction performance.

WARNING!

The traction grade assigned to this tire is based on straight-ahead braking traction tests, and does not include acceleration, cornering, hydroplaning, or peak traction characteristics.

Temperature Grades

The temperature grades are A (the highest), B, and C, representing the tire's resistance to the generation of heat and its ability to dissipate heat, when tested under controlled conditions on a specified indoor laboratory test wheel. Sustained high temperature can cause the material of the tire to degenerate and reduce tire life, and excessive temperature can lead to sudden tire failure. The grade C corresponds to a level of performance, which all passenger car tires must meet under the Federal Motor Vehicle Safety Standard No. 109. Grades B and A represent higher levels of performance on the laboratory test wheel, than the minimum required by law.

WARNING!

The temperature grade for this tire is established for a tire that is properly inflated and not overloaded. Excessive speed, under-inflation, or excessive loading, either separately or in combination, can cause heat buildup and possible tire failure.

INDEX

About Your Brakes 328
ABS (Anti-Lock Brake System) 331
Accessory Delay, Power. 12
Adding Engine Coolant (Antifreeze) 443
Adding Fuel. 379
Adding Washer Fluid 438
Additives, Fuel 373
Airbag. 57
Airbag Deployment 65
Airbag Light 62
Airbag Maintenance 66
Airbag, Side. 60
Airbag, Window (Side Curtain) 61
Air Cleaner, Engine (Engine Air Cleaner Filter) 432
Air Conditioner Maintenance 434
Air Conditioning. 285
Air Conditioning Controls 285
Air Conditioning Filter 297
Air Conditioning, Operating Tips 298
Air Conditioning Refrigerant 434
Air Conditioning System 285
Air Pressure, Tires. 351
Alarm System (Security Alarm) 18
Alterations/Modifications, Vehicle 7
Antenna, Satellite Radio. 273
Antifreeze (Engine Coolant) 442
  Disposal 445
Anti-Lock Brake System (ABS) 331
Anti-Lock Warning Light 331
Anti-Theft Security Alarm (Theft Alarm). 18
Appearance Care 453
Ashtray 205
Assistance Towing. 143
Auto Down Power Windows 36
Automatic Dimming Mirror 126
Automatic Door Locks 33
Automatic Oil Change Indicator 227
Automatic Temperature Control (ATC) 290

Automatic Transmission 305
Adding Fluid 451
Fluid and Filter Changes 453
Fluid Level Check 451
Fluid Type 449
Gear Ranges 308
Special Additives 450
Autostick 322
Auto Unlock, Doors 33

Battery 433
Keyless Transmitter Replacement (RKE) 26
Location 433
Belts, Seat 43
Body Mechanism Lubrication 437
B-Pillar Location 345
Brake Assist System 335
Brake, Parking 328
Brake System 447
Anti-Lock (ABS) 331
Fluid Check 447
Master Cylinder 447
Parking 328
Warning Light 223
Brake/Transmission Interlock 307
Bulb Replacement 469
Bulbs, Light 95

Calibration, Compass 242
Capacities, Fluid 475
Caps, Filler
Fuel 379
Oil (Engine) 423
Power Steering 327
Radiator (Coolant Pressure) 444
Carbon Monoxide Warning 91
Car Washes 454
Cellular Phone 129

Certification Label 382
Chains, Tire 360
Changing A Flat Tire 400
Chart, Tire Sizing 341
Check Engine Light (Malfunction Indicator Light) . .426
Checking Your Vehicle For Safety 91
Checks, Safety 91
Child Restraint 69
Cigar Lighter 205
Clean Air Gasoline 371
Cleaning
  Wheels 456
Climate Control 285
Clock 249
Cold Weather Operation 304
Compact Disc (CD) Maintenance 284
Compact Spare Tire 355
Compass 235
Compass Calibration 242
Compass Variance 243
Computer, Trip/Travel 241
Connector
  UCI 276
  Universal Consumer Interface (UCI) 276
Console 208
Console, Floor 208
Contract, Service 491
Convertible 101
Convertible Top 101
Coolant Pressure Cap (Radiator Cap) 444
Cooling System 441
  Adding Coolant (Antifreeze) 443
  Coolant Capacity 475
  Coolant Level 442
  Disposal of Used Coolant 445
  Drain, Flush, and Refill 442
  Inspection 445
  Points to Remember 446

Pressure Cap 444
Radiator Cap 444
Selection of Coolant (Antifreeze) 442
Corrosion Protection 453
Cruise Light 228
Cupholders 206
Customer Assistance 489
Customer Programmable Features 246

Data Recorder, Event 68
Daytime Running Lights 182
Dealer Service. 427
Deck Lid, Power Release 38
Defroster, Rear Window. 212
Defroster, Windshield 93
Delay (Intermittent) Wipers 185
Diagnostic System, Onboard 425
Dimmer Switch, Headlight. 180
Dipsticks
Automatic Transmission 451
Oil (Engine) 429
Power Steering 327
Disabled Vehicle Towing 417
Disposal
Antifreeze (Engine Coolant) 445
Door Locks 31
Door Locks, Automatic 33
Door Opener, Garage. 192
Driver's Seat Back Tilt 170
Driving
Through Flowing, Rising, or Shallow Standing Water 324

E-85 Fuel 375
Electrical Power Outlets. 202
Electric Rear Window Defrost. 212
Electric Remote Mirrors 127
Electronic Speed Control (Cruise Control) 189

Electronic Stability Control (ESC) 336
Electronic Vehicle Information Center (EVIC) 236
Emergency, In Case of
Jacking 400
Jump Starting 410
Towing 417
Emission Control System Maintenance 426
Engine 423
Air Cleaner 432
Block Heater 304
Break-In Recommendations 90
Checking Oil Level 429
Compartment 424
Compartment Identification 424
Coolant (Antifreeze) 442
Cooling 441
Exhaust Gas Caution 91
Fuel Requirements 370
Jump Starting 410
Oil 429
Oil Change Interval 227
Oil Filler Cap 423
Oil Selection 430
Oil Synthetic 431
Overheating 398
Starting 303
Temperature Gauge 220
Engine Oil Viscosity 431
Engine Oil Viscosity Chart 431
Enhanced Accident Response Feature 64
Entry System, Illuminated 21
Ethanol 371
Event Data Recorder 68
Exhaust Gas Caution. 91
Exhaust System 91
Extender, Seat Belt 56
Exterior Lights 95

Fabric Care 457
Filler Location Fuel 220
Filters
Air Cleaner 432
Air Conditioning 297
Automatic Transmission 453
Engine Oil 432
Engine Oil Disposal 432
Flashers 398
Hazard Warning 398
Turn Signal 95
Flash-To-Pass 181
Flexible Fuel Vehicles
Cruising Range 378
Engine Oil 377
Fuel Requirements 375
Maintenance 378
Replacement Parts 378
Starting 378
Fluid Capacities 475
Fluid Leaks 95
Fluid Level Checks
Automatic Transmission 451
Brake 447
Cooling System 442
Engine Oil 429
Power Steering 327
Fluids, Lubricants and Genuine Parts 476
Fog Lights 181
Fog Light Service 472
Freeing A Stuck Vehicle 415
Fuel 370
Adding 379
Additives 373
Clean Air 371
Ethanol 371
Filler Cap (Gas Cap) 220
Filler Door (Gas Cap) 220

Gasoline 370
Gauge 220
Light 221
Materials Added 373
Methanol 371
Octane Rating 370
Requirements 370
Tank Capacity 475
Fuel, Flexible 375
Fueling 379
Fuel System Caution 380
Fuses 462

Garage Door Opener (HomeLink®) 192
Gas Cap (Fuel Filler Cap) 379
Gasoline, Clean Air 371
Gasoline, Reformulated 371
Gauges
Coolant Temperature 220
Fuel 220
Odometer 224
Tachometer 224
Gear Ranges 308
Gear Select Lever Override 416
General Information 18
Glass Cleaning 458
Gross Axle Weight Rating 382
Gross Vehicle Weight Rating 382
GVWR 382

Hands-Free Phone (Uconnect™) 129
Hazard
Driving Through Flowing, Rising, or Shallow Standing Water 324
Hazard Warning Flasher 398
Headlights 470
Bulb Replacement 470
Cleaning 456

High Beam 234
High Beam/Low Beam Select Switch 180
On With Wipers 179
Passing 181
Replacing 470
Switch 178
Head Restraints 171
Heated Mirrors 128
Heated Seats. 168
Heater 285
Heater, Engine Block 304
High Beam/Low Beam Select (Dimmer) Switch 180
Hitches
Trailer Towing 386
HomeLink® (Garage Door Opener) Transmitter 192
Hood Prop 176
Hood Release 175

Ignition 12
Key 12
Lock 12
Ignition Key Removal 12
Illuminated Entry 21
Immobilizer (Sentry Key) 15
Infant Restraint 69
Information Center, Vehicle 236
Inside Rearview Mirror 125
Instrument Cluster 219
Instrument Panel and Controls 218
Instrument Panel Cover 457
Instrument Panel Lens Cleaning 459
Integrated Power Module (Fuses) 462
Interior Appearance Care 457
Interior Lighting 183
Intermittent Wipers (Delay Wipers). 185
Introduction 4

Jacking Instructions 402

Jack Location 400
Jack Operation 400
Jump Starting 410

Key-In Reminder 15
Keyless Entry System 21
Key, Programming 17
Key, Replacement 16
Keys 12
Key, Sentry (Immobilizer) 15
Knee Bolster. 57

Lane Change and Turn Signals. 229
Lane Change Assist. 180
Lap/Shoulder Belts. 43
Latches 95
  Hood 175
Latch Plate. 44
Lead Free Gasoline 370
Leaks, Fluid 95
Life of Tires 358
Light Bulbs 95
Lights 95
  Airbag 62
  Back-Up 473
  Battery Saver 184
  Brake Assist Warning 338
  Brake Warning 223
  Bulb Replacement 470
  Courtesy/Reading 183
  Daytime Running 182
  Dimmer Switch, Headlight 180
  Electronic Stability Program (ESP) Indicator 338
  Engine Temperature Warning 222
  Exterior 95
  Fog 181
  Headlights 178
  Headlights On With Wipers 179

Headlight Switch 178
High Beam 180
High Beam Indicator 234
High Beam/Low Beam Select 180
Illuminated Entry 21
Instrument Cluster 178
Interior 183
License 474
Lights On Reminder 179
Low Fuel 221
Malfunction Indicator (Check Engine) 233
Map Reading 183
Oil Pressure 222
Passing 181
Seat Belt Reminder 222
Security Alarm (Theft Alarm) 19
Service 470
Theft Alarm (Security Alarm) 229
Tire Pressure Monitoring (TPMS) 231
Traction Control 338
Turn Signal 95
Voltage 221
Warning (Instrument Cluster Description) 220
Loading Vehicle 382
Capacities 383
Tires 345
Locks 31
Automatic Door 33
Auto Unlock 33
Door 31
Power Door 32
Low Tire Pressure System 362
Lubrication, Body 437
Lumbar Support 170

Maintenance Free Battery. 433
Maintenance Procedures 428
Maintenance Schedule 480

Malfunction Indicator Light (Check Engine) 233
Manual, Service 494
Map/Reading Lights 183
Master Cylinder (Brakes) 447
Memory Feature (Memory Seat) 170
Methanol 371
Mini-Trip Computer 235
Mirrors 125
  Automatic Dimming 126
  Electric Powered 127
  Electric Remote 127
  Heated 128
  Outside 128
  Rearview 125
  Vanity 129
Modifications/Alterations, Vehicle 7
Monitor, Tire Pressure System 362
Mopar Parts 427
MTBE/ETBE 371

New Vehicle Break-In Period 90

Occupant Restraints 40
Occupant Restraints (Sedan) 60
Octane Rating, Gasoline (Fuel) 370
Odometer 224
  Trip 224
Oil Change Indicator 227
Oil Change Indicator, Reset 227
Oil, Engine 429
  Capacity 475
  Change Interval 227
  Checking 429
  Dipstick 429
  Disposal 432
  Filter 432
  Filter Disposal 432

Identification Logo 430
Materials Added to 431
Recommendation 430
Synthetic 431
Viscosity 431
Oil Filter, Selection 432
Oil Pressure Light 222
Onboard Diagnostic System 425
Opener, Garage Door (HomeLink®) 192
Operating Precautions 425
Operator Manual (Owner's Manual) 4
Overheating, Engine 398
Owner's Manual (Operator Manual) 4

Paint Care 453
Panic Alarm 26
Parking Brake 328
Passenger Seat Back Tilt (Easy Entry System) 170
Passing Light 181
Personal Settings 246
Pets 90
Phone, Cellular 129
Phone, Hands-Free (Uconnect™) 129
Placard, Tire and Loading Information 346
Power
Accessory Delay 12
Deck Lid Release 38
Door Locks 32
Mirrors 127
Outlet (Auxiliary Electrical Outlet) 202
Seats 166
Steering 327
Windows 34
Pregnant Women and Seat Belts 56
Preparation for Jacking 401
Pretensioners
Seat Belts 51
Programmable Electronic Features 246

Programming Transmitters (Remote Keyless Entry) . .21

Radial Ply Tires 353
Radiator Cap (Coolant Pressure Cap) 444
Radio Operation 285
Radio Remote Controls 283
Rear Cupholder 207
Rearview Mirrors 125
Rear Window Defroster 212
Rear Window Features 212
Recorder, Event Data 68
Recreational Towing 395
Reformulated Gasoline 371
Refrigerant 435
Release, Hood. 175
Reminder, Seat Belt. 55
Remote Control
  Security Alarm 18
  Starting System 28
Remote Keyless Entry (RKE) 21
Remote Sound System (Radio) Controls 283
Remote Starting System. 28
Remote Trunk Release. 38
Replacement Bulbs 469
Replacement Keys 16
Replacement Parts. 427
Replacement Tires 359
Reporting Safety Defects 493
Resetting Oil Change Indicator. 227
Restraint, Head. 171
Restraints, Child. 69
Restraints, Occupant 40
Rotation, Tires 361

Safety Checks Inside Vehicle 92
Safety Checks Outside Vehicle 95
Safety Defects, Reporting 493
Safety, Exhaust Gas. 91

Safety Information, Tire 340
Safety Tips 91
Satellite Radio Antenna 273
Schedule, Maintenance 480
Seat Belt Maintenance 459
Seat Belt Reminder 55
Seat Belts 40
And Pregnant Women 56
Child Restraint 69
Extender 56
Front Seat 43
Inspection 92
Operating Instructions 44
Pretensioners 51
Rear Seat 43
Reminder 222
Untwisting Procedure 48
Seats 165
Adjustment 165
Easy Entry 170
Heated 168
Height Adjustment 166
Lumbar Support 170
Memory 170
Power 166
Reclining 169
Seatback Release 170
Tilting 166
Security Alarm (Theft Alarm) 18
Selection of Coolant (Antifreeze) 476
Sentry Key (Immobilizer) 15
Sentry Key Programming 17
Service Assistance 489
Service Contract 491
Service Manuals 494
Settings, Personal 246
Setting the Clock 249
Shift Lever Override 416

Shoulder Belts 43
Side Airbag 64
Side Window Demisters (Defrosters) 297
Signals, Turn 95
Snow Chains (Tire Chains) 360
Snow Tires 354
Spare Tire 355
Speed Control (Cruise Control) 189
Speedometer 220
Starting 28
  Cold Weather 304
  Remote 28
Starting and Operating 303
Starting Procedures 303
Steering
  Power 327
  Tilt Column 188
  Wheel, Tilt 188
Steering Wheel Audio Controls 283
Steering Wheel Mounted Sound System Controls . . .283
Storage 468
Storage, Vehicle 296
Stuck, Freeing 415
Supplemental Restraint System - Airbag 57
Synthetic Engine Oil 431
System, Remote Starting 28

Tachometer 224
Taillights 473
Telescoping Steering Column 188
Temperature Control, Automatic (ATC) 290
Temperature Gauge, Engine Coolant 220
Theft Alarm (Security Alarm) 18
Theft System (Security Alarm) 18
Tilt Steering Column 188
Time Delay, Headlight 179
Tip Start 303
Tire and Loading Information Placard 345

Tire Markings 340
Tires 95
Aging (Life of Tires) 358
Air Pressure 350
Chains 360
Changing 400
Compact Spare 355
General Information 350
High Speed 352
Inflation Pressures 351
Jacking 400
Life of Tires 358
Load Capacity 345
Pressure Monitor System (TPMS) 362
Pressure Warning Light 231
Quality Grading 495
Radial 353
Replacement 359
Rotation 361
Safety 340
Sizes 341
Snow Tires 354
Spare Tire 400
Spinning 357
Trailer Towing 390
Tread Wear Indicators 358
Tire Safety Information 340
Tongue Weight/Trailer Weight 388
Tonneau Cover 101
To Open Hood 175
Towing 384
24-Hour Towing Assistance 143
Disabled Vehicle 417
Guide 387
Recreational 395
Weight 387
Towing Assistance. 143
Traction 323

Trailer Towing 384
Cooling System Tips 394
Hitches 386
Minimum Requirements 389
Tips 392
Trailer and Tongue Weight 388
Trailer Towing Guide. 387
Trailer Weight. 387
Transmission 449
Automatic 305
Filter 453
Transmitter Battery Service (Remote Keyless Entry) . .26
Transmitter, Garage Door Opener (HomeLink®) 192
Transmitter Programming (Remote Keyless Entry) . . .21
Transmitter, Remote Keyless Entry (RKE) 21
Transporting Pets 90
Tread Wear Indicators 358
Trip Computer 235
Trip Odometer 224
Trip Odometer Reset Button. 228
Trunk Lid (Deck Lid) 38
Trunk Release Remote Control 38
Turn Signals 180

UCI Connector 276
Uconnect™ (Hands-Free Phone) 129
Understanding Your Instrument Panel. 218
Uniform Tire Quality Grades 495
Universal Consumer Interface (UCI) Connector 276
Universal Transmitter 192
Unleaded Gasoline 370
Untwisting Procedure, Seat Belt 48
Upholstery Care 457

Vanity Mirrors 129
Variance, Compass 243
Vehicle Certification Label 382
Vehicle Identification Number (VIN) 6

Vehicle Loading 346
Vehicle Modifications/Alterations 7
Vehicle Storage 296
Vehicle Theft Alarm (Security Alarm) 18
Viscosity, Engine Oil 431
Voice Recognition System (VR). 160

Warning Lights (Instrument Cluster Description) . . .220
Warnings and Cautions. 6
Warranty Information 492
Washer
  Adding Fluid 438
Washers, Windshield 184
Washing Vehicle 454
Water
  Driving Through 324
Wheel and Wheel Trim 456
Wheel and Wheel Trim Care 456
Wind Buffeting. 38
Window Fogging 297
Windows 34
  Power 34
Windshield Defroster 93
Windshield Washers 184
  Fluid 438
Windshield Wiper Blades. 438
Windshield Wipers 184
Windstop 111
  Folding 111
Wiper Blade Replacement 438
Wipers, Intermittent 185

INSTALLATION OF RADIO TRANSMITTING EQUIPMENT

Special design considerations are incorporated into this vehicle's electronic system to provide immunity to radio frequency signals. Mobile two-way radios and telephone equipment must be installed properly by trained personnel. The following must be observed during installation.

The positive power connection should be made directly to the battery and fused as close to the battery as possible. The negative power connection should be made to body sheet metal adjacent to the negative battery connection. This connection should not be fused.

Antennas for two-way radios should be mounted on the roof or the rear area of the vehicle. Care should be used in mounting antennas with magnet bases. Magnets may affect the accuracy or operation of the compass on vehicles so equipped.

The antenna cable should be as short as practical and routed away from the vehicle wiring when possible. Use only fully shielded coaxial cable.

Carefully match the antenna and cable to the radio to ensure a low Standing Wave Ratio (SWR).

Mobile radio equipment with output power greater than normal may require special precautions.

All installations should be checked for possible interference between the communications equipment and the vehicle's electronic systems.

CHRYSLER

SERVICE

STICK WITH THE SPECIALISTS®

Chrysler Group LLC
13C27-126-AB

2nd Edition

Printed in U.S.A.