TABLE OF CONTENTS

1	**Before driving**	Adjusting and operating features such as door locks, mirrors, and steering column.
2	**When driving**	Driving, stopping and safe–driving information.
3	**Interior features**	Air conditioning and audio systems, as well as other interior features for a comfortable driving experience.
4	**Maintenance and care**	Cleaning and protecting your vehicle, performing do–it–yourself maintenance, and maintenance information.
5	**When trouble arises**	What to do if the vehicle needs to be towed, gets a flat tire, or is involved in an accident.
6	**Vehicle specifications**	Detailed vehicle information.
7	**For U.S. owners**	Reporting safety defects for U.S. owners
	Index	Alphabetical listing of information contained in this manual.

1 Before driving

1−1. Key information 28
Keys 28

1−2. Opening, closing and locking the doors 30
Wireless remote control 30
Side doors 33
Access doors..... 36
Back door 38
Glass hatch 41

1−3. Adjustable components (seats, mirrors, steering wheel) 43
Front seats 43
Rear seats 44
Head restraints 49
Seat belts 51
Steering wheel 57
Anti−glare inside rear view mirror..... 58
Outside rear view mirrors 59

1−4. Opening and closing the windows 62
Power windows 62

1−5. Refueling 64
Opening the fuel tank cap 64

1−6. Theft deterrent system 68
Engine immobilizer system..... 68
Theft prevention labels (U.S.A.) 70

1−7. Safety information 71
Correct driving posture 71
SRS airbags 73
Front passenger occupant classification system..... 85
Child restraint systems 90
Installing child restraints 93

2 When driving

2−1. Driving procedures..... 104
Driving the vehicle 104
Engine (ignition) switch..... 114
Automatic Transmission 117
Manual Transmission 119
Turn signal lever 121
Parking brake 122

2−2. Instrument cluster 124
Gauges and meters 124
Indicators and warning lights 127
Accessory meter 130

2−3. Operating the lights and wipers 131
Headlight switch 131
Windshield wipers and washer 133
Rear window wiper and washer 135

2−4. Using other driving systems 136
Cruise control..... 136
Intuitive parking assist..... 139
Four−wheel drive system (4WD models with a manual transmission) 144
Four−wheel drive system (4WD models with an automatic transmission).... 146
Active traction control system 148
AUTO LSD system (2WD models) 150
Rear differential lock system 152
Clutch start cancel switch (vehicles with a manual transmission) 155
Driving assist systems 156

2−5. Driving information..... 160
Off−road precautions 160
Cargo and luggage 165
Vehicle load limits 168
Winter driving tips 169
Trailer towing 172
Dinghy towing 182

3 Interior features

3−1. Using the air conditioning system and defogger..... 184
Air conditioning system 184
Rear window defogger 190

3−2. Using the audio system ... 191
Audio system types 191
Using the radio 194
Using the CD player 200
Playing back MP3 and WMA discs 208
Optimal use of the audio system..... 217
Operating the sub woofer ... 220
Changing display color (type B only) 221
Using the AUX adapter..... 222
Using the steering wheel audio switches..... 224

3−3. Using the interior lights ... 226
Interior lights list 226
• Interior lights..... 227

3−4. Using the storage features 228
List of storage features..... 228
• Glove box 228
• Cup holders (front) 229
• Cup holders (rear) 232
• Bottle holders 233
• Auxiliary box..... 234

3−5. Other interior features 235
Sun visors..... 235
Vanity mirror 236
Clock 237
Outside temperature display 238
Power outlet (12V DC) 239
Power outlet (if 115V AC equipped)..... 240
Armrest..... 246

Floor mat 247
Luggage storage box (vehicles without sub woofer) 248
Luggage compartment features 249
Compass 252

4 Maintenance and care

4−1. Maintenance and care..... 258
Cleaning and protecting the vehicle exterior 258
Cleaning and protecting the vehicle interior 260

4−2. Maintenance 263
Maintenance requirements 263
General maintenance 265
Emission inspection and maintenance (I/M) programs 268

4−3. Do−it−yourself maintenance 269
Do−it−yourself service precautions 269
Hood..... 273
Engine compartment 274
Tires 287
Tire inflation pressure..... 292
Wheels 296
Air conditioning filter 298
Key battery 301
Checking and replacing fuses 303
Light bulbs 314

5 When trouble arises

5−1. Essential information 322
If your vehicle needs to be towed 322
If you think something is wrong..... 327
Fuel pump shut off system 328
Event data recorder 329

5−2. Steps to take in an emergency 331
If a warning light turns on or a warning buzzer sounds... 331
If you have a flat tire 340
If the engine will not start 350
If the shift lever cannot be shifted from P 351
If you lose your keys 352
If the vehicle battery is discharged 353
If your vehicle overheats..... 356
If the vehicle becomes stuck 359

6 Vehicle specifications

6−1. Specifications 362
Maintenance data (fuel, oil level, etc.) 362
Fuel information 372
Tire information..... 375

6−2. Customization 386
Customizable features 386
Items to initialize 388

7 For U.S. owners

Reporting safety defects for U.S. owners 390

Index

Abbreviation list 392

Alphabetical index..... 394

What to do if..... 402

Exterior

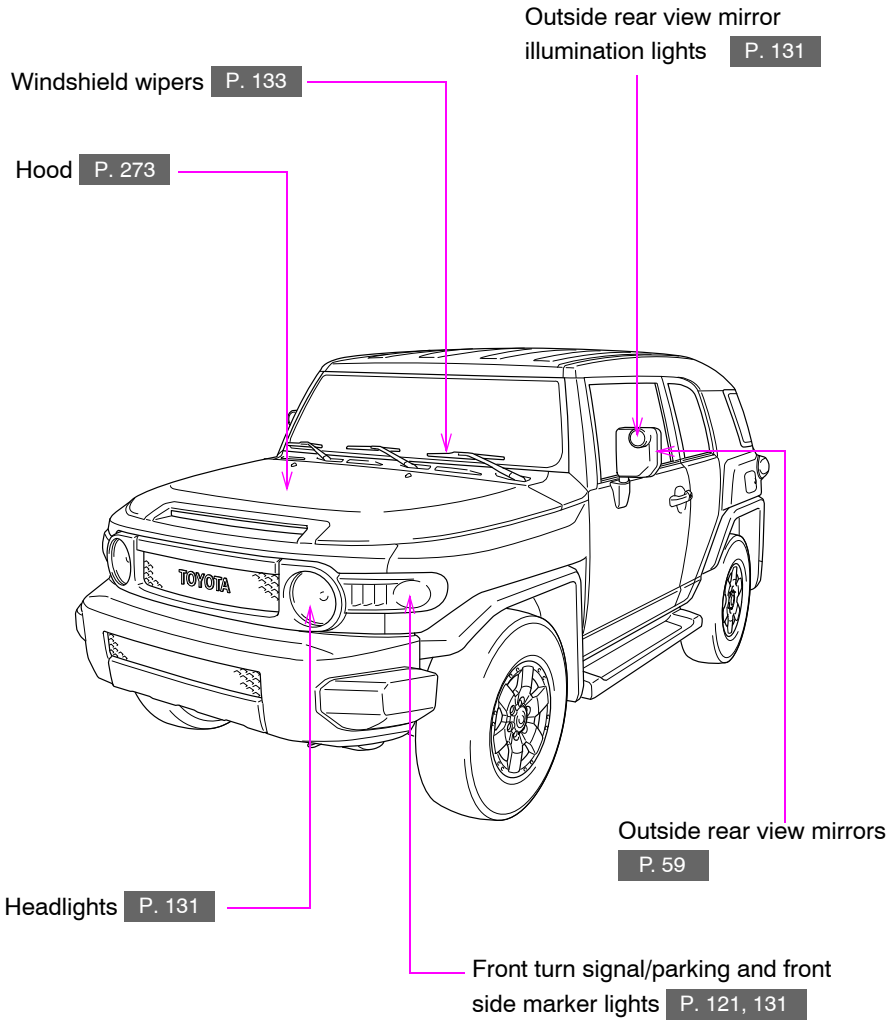
Outside rear view mirror illumination lights P. 131
Windshield wipers P. 133
Hood P. 273
TOYOTA
Outside rear view mirrors P. 59
Headlights P. 131
Front turn signal/parking and front side marker lights P. 121, 131

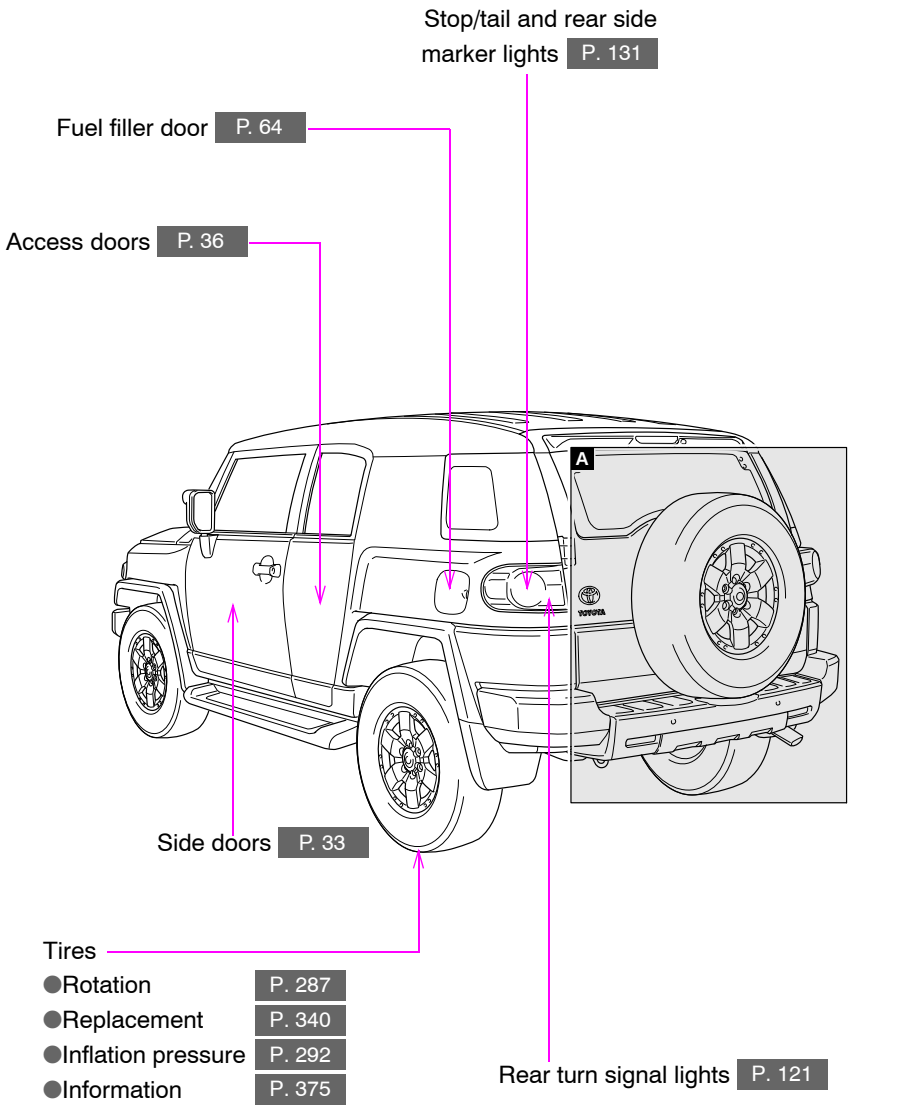
Stop/tail and rear side marker lights P. 131
Fuel filler door P. 64
Access doors P. 36
A
Side doors P. 33
Tires
●Rotation P. 287
●Replacement P. 340
●Inflation pressure P. 292
●Information P. 375
Rear turn signal lights P. 121

: If equipped

A

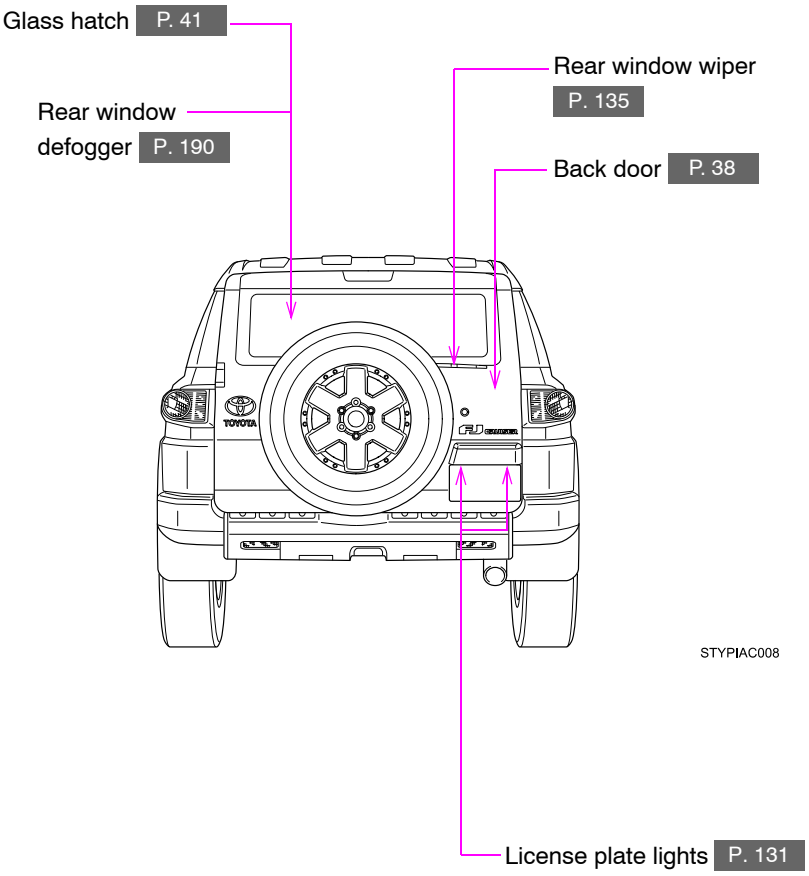

: If equipped

Interior

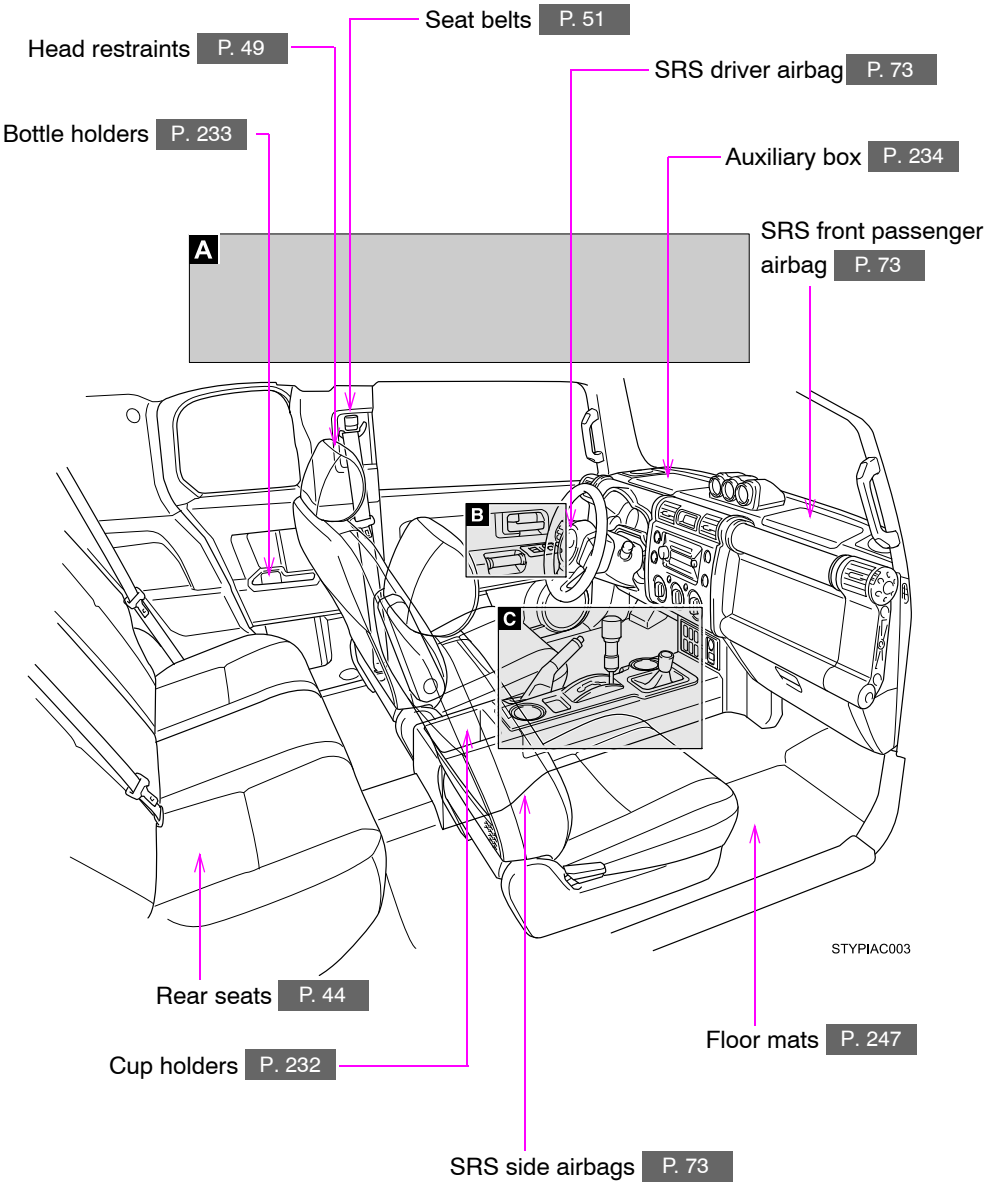
Seat belts P. 51
Head restraints P. 49
SRS driver airbag P. 73
Bottle holders P. 233
Auxiliary box P. 234
SRS front passenger airbag P. 73
A
B
C
STYPIAC003
Rear seats P. 44
Floor mats P. 247
Cup holders P. 232
SRS side airbags P. 73

A

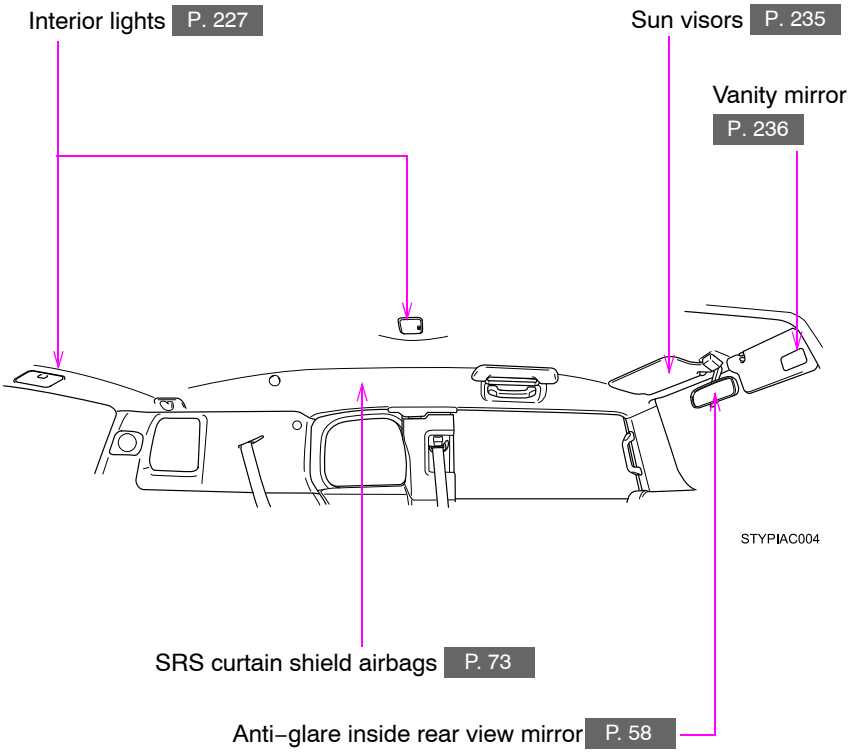
Interior lights P. 227
Sun visors P. 235
Vanity mirror
P. 236
STYPIAC004
SRS curtain shield airbags P. 73
Anti−glare inside rear view mirror P. 58

B

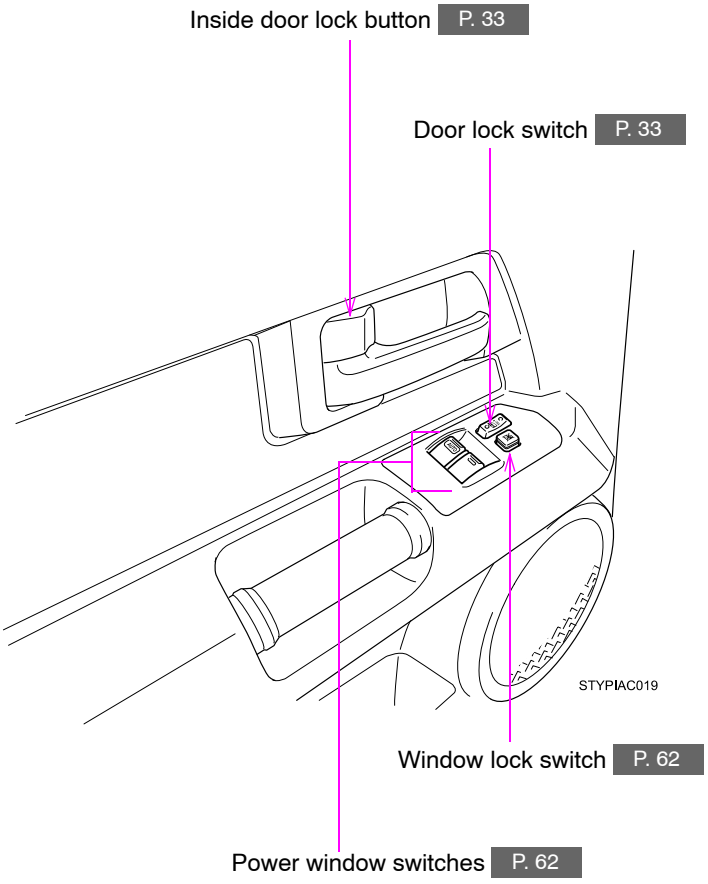
Inside door lock button P. 33
Door lock switch P. 33
STYPIAC019
Window lock switch P. 62
Power window switches P. 62

C

▶ **Automatic transmission**

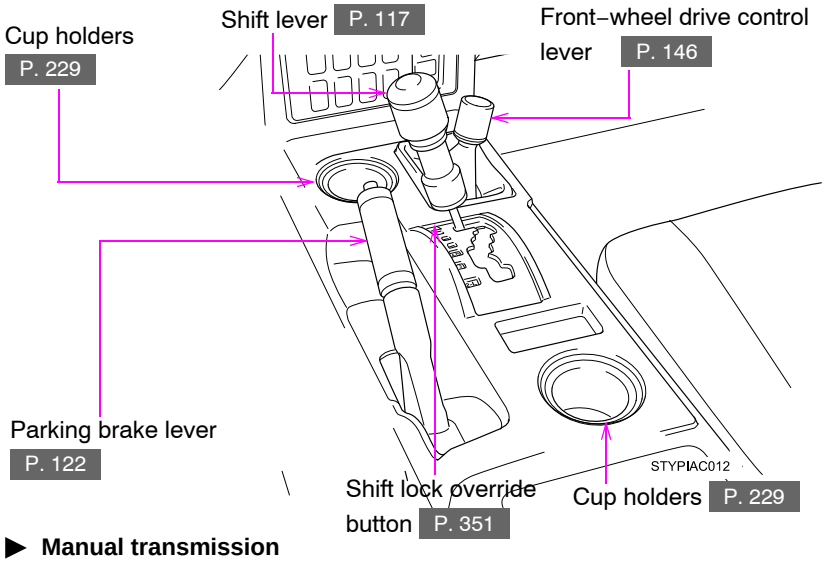

▶ **Manual transmission**

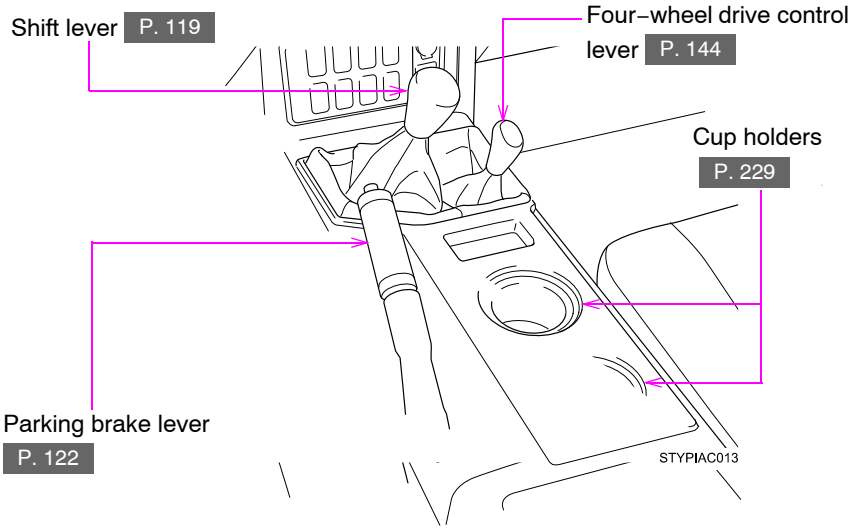

: If equipped

Instrument panel

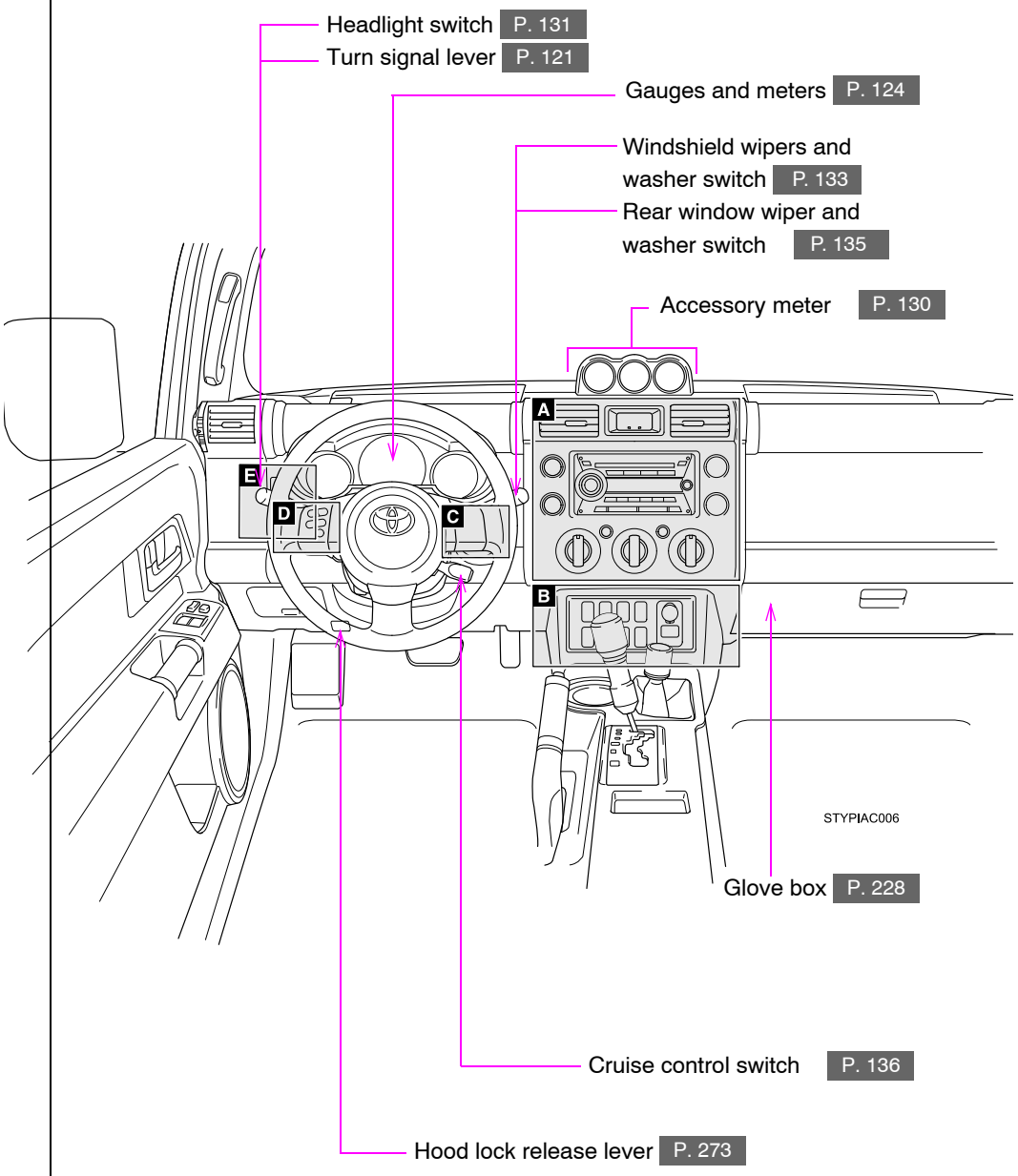

A

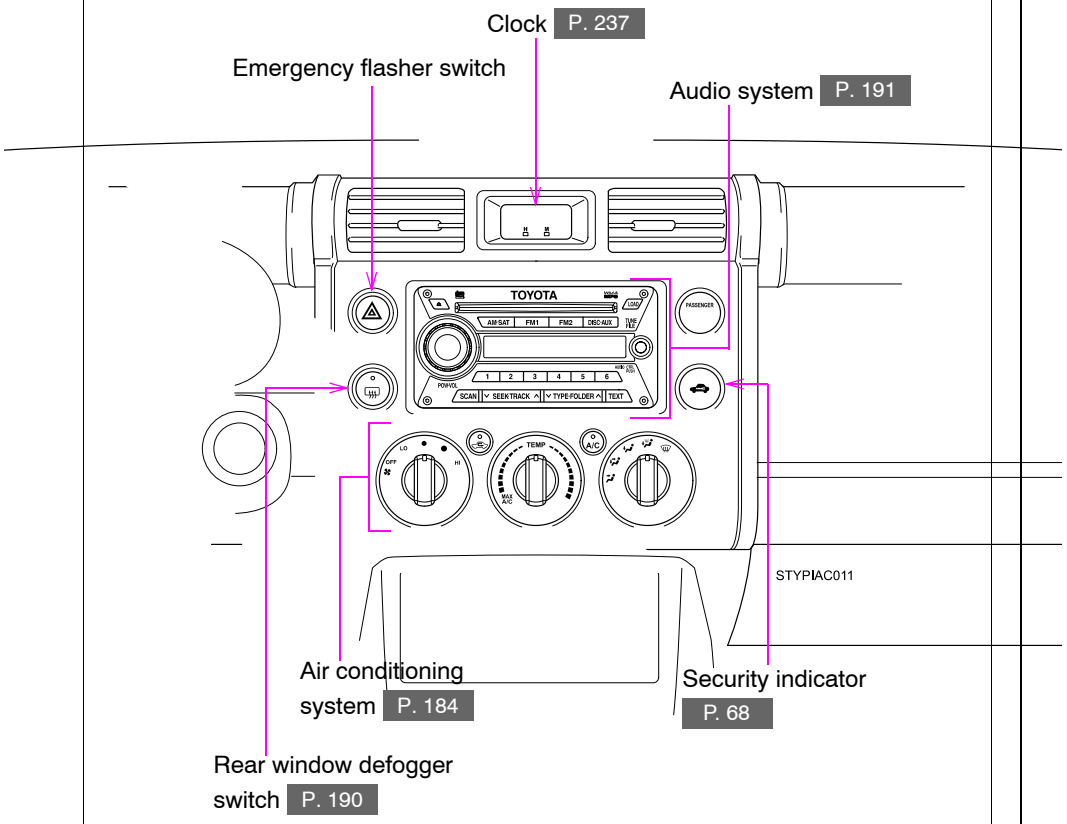

: If equipped

B

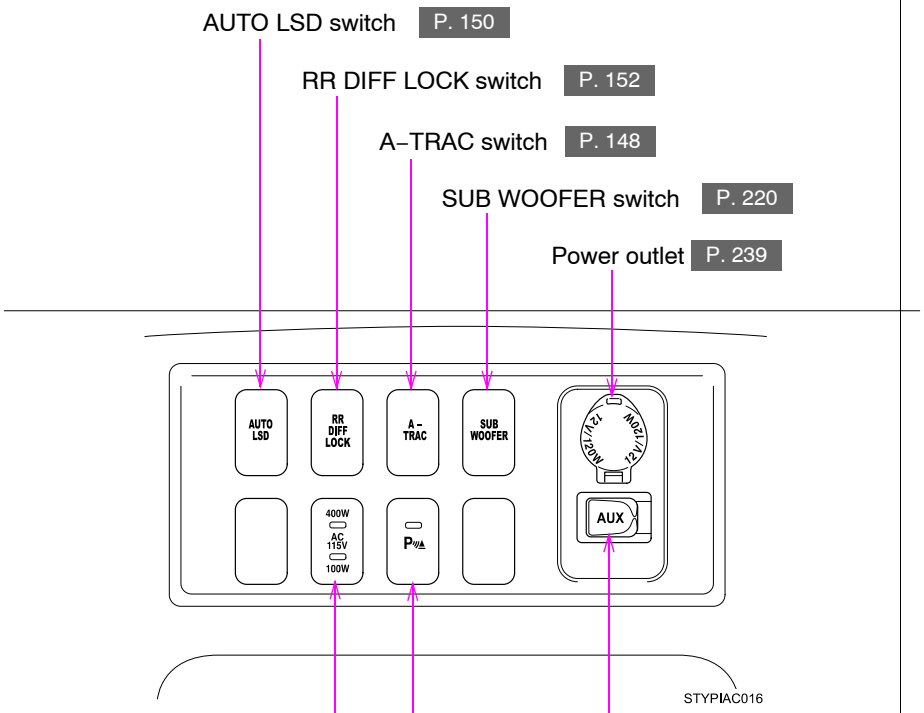

AUTO LSD switch P. 150

RR DIFF LOCK switch P. 152

A–TRAC switch P. 148

SUB WOOFER switch P. 220

Power outlet P. 239

AUX adapter P. 222

Intuitive parking assist switch P. 139

Power outlet main switch P. 240

C

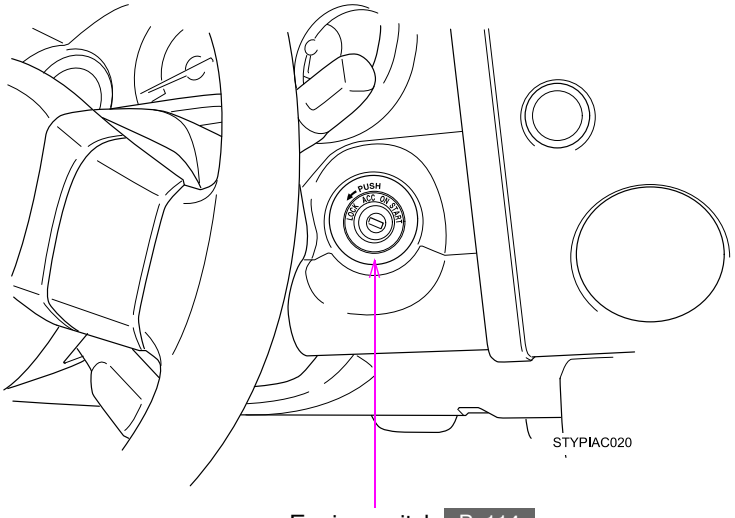

Engine switch P. 114

: If equipped

D

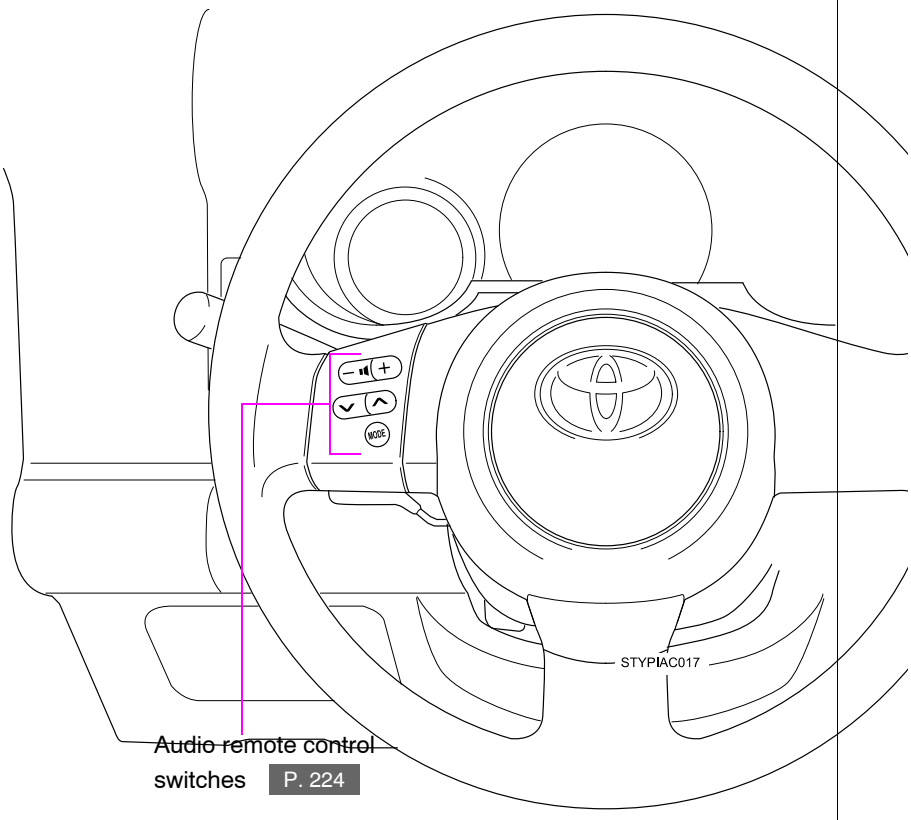

E

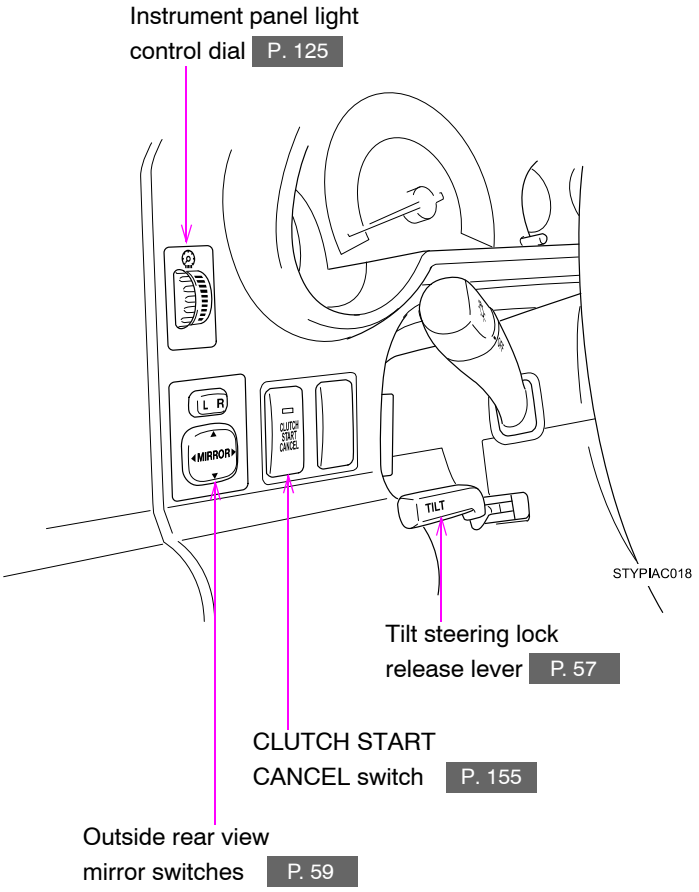

: If equipped

Luggage compartment

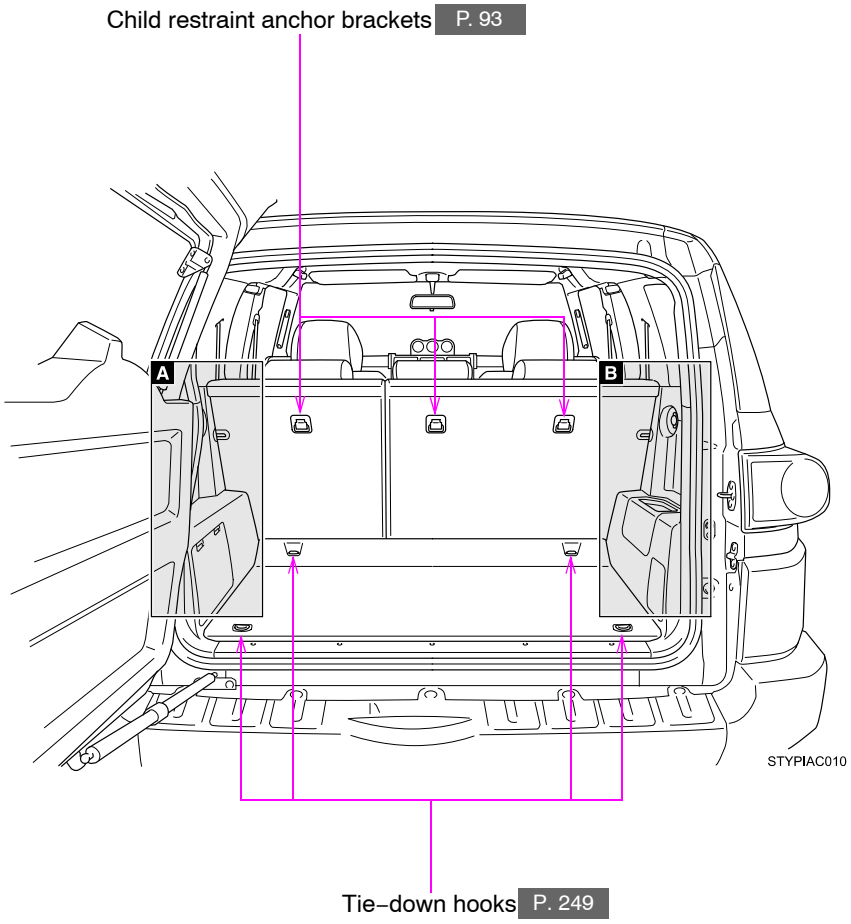

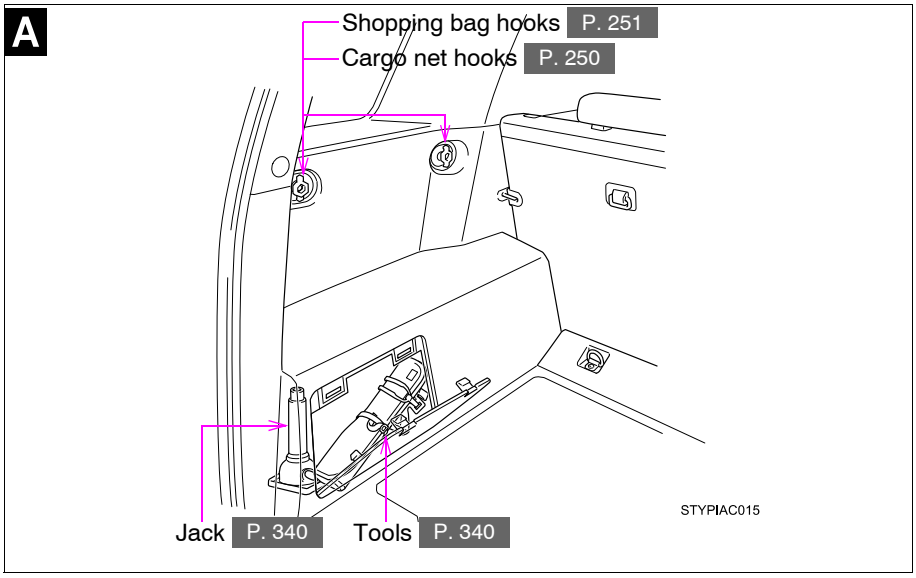

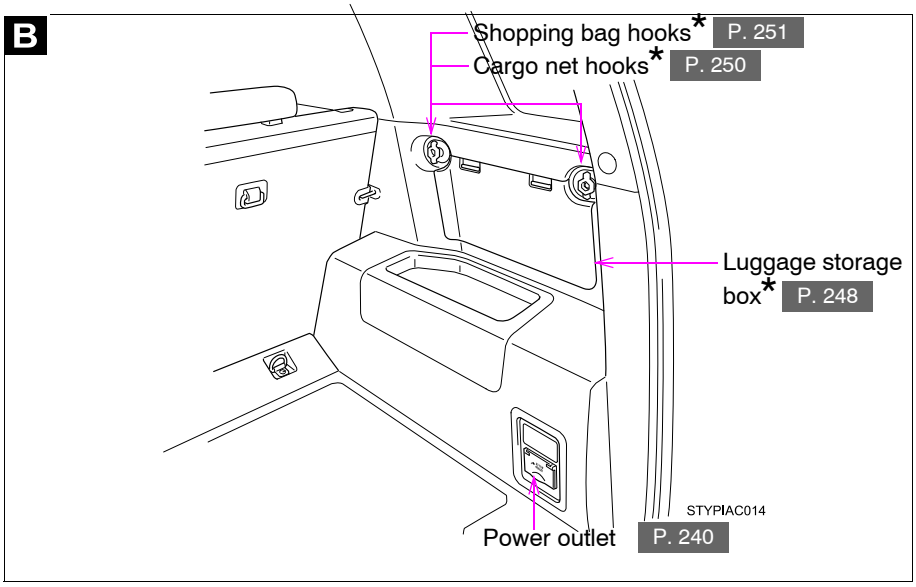

: If equipped
*: Vehicles without sub woofer

For your information

Main Owners Manual

Please note that this manual applies to all models explains and all equipment, including options. Therefore, you may find some explanations for equipment not installed on your vehicle.

All specifications provided in this manual are current at the time of printing. However, because of the Toyota policy of continual product improvement, we reserve the right to make changes at any time without notice.

Depending on specifications, the vehicle shown in the illustrations may differ from your vehicle in terms of equipment.

Accessories, spare parts and modification of your Toyota

A wide variety of non−genuine spare parts and accessories for Toyota vehicles are currently available in the market. You should know that Toyota does not warrant these products and is not responsible for their performance, repair, or replacement, or for any damage they may cause to, or adverse effect they may have on, your Toyota vehicle.

This vehicle should not be modified with non−genuine Toyota products. Modification with non−genuine Toyota products could affect its performance, safety or durability, and may even violate governmental regulations. In addition, damage or performance problems resulting from the modification may not be covered under warranty.

Installation of a mobile two−way radio system

As the installation of a mobile two−way radio system in your vehicle could affect electronic systems such as the multiport fuel injection system/sequential multiport fuel injection system, cruise control system, anti−lock brake system, SRS airbag system and seat belt pretensioner system, be sure to check with your Toyota dealer for precautionary measures or special instructions regarding installation.

Scrapping your Toyota

The SRS airbag and seat belt pretensioner devices in your Toyota contain explosive chemicals. If the vehicle is scrapped with the airbags and seat belt pretensioners left as they are, this may cause an accident such as fire. Be sure to have the systems of the SRS airbag and seat belt pretensioner removed and disposed of by a qualified service shop or by your Toyota dealer before you scrap your vehicle.

Perchlorate Material

Special handling may apply,
See www.dtsc.ca.gov/hazardouswaste/perchlorate.

Your vehicle has components that may contain perchlorate. These components may include airbag, seat belt pretensioners, and wireless remote control batteries.

CAUTION

General precautions while driving

Driving under the influence: Never drive your vehicle when under the influence of alcohol or drugs that have impaired your ability to operate your vehicle. Alcohol and certain drugs delay reaction time, impair judgment and reduce coordination, which could lead to an accident that will hurt or kill you, your occupants or others.

Defensive driving: Always drive defensively. Anticipate mistakes that other drivers or pedestrians might make and be ready to avoid accidents.

Driver distraction: Always give your full attention to driving. Anything that distracts the driver, such as adjusting controls, talking on a cellular phone or reading can result in a collision with resulting death or serious injury to you, your occupants or others.

CAUTION

General precaution regarding children's safety

Never leave children unattended in the vehicle, and never allow children to have or use the key.

Children may be able to start the vehicle or shift the vehicle into neutral. There is also a danger that children may injure themselves by playing with the cigarette lighter, the windows, or other features of the vehicle. In addition, heat build−up or extremely cold temperatures inside the vehicle can be fatal to children.

Symbols used throughout this manual

Cautions & Notices

⚠ CAUTION

This is a warning against anything which may cause injury to people if the warning is ignored. You are informed about what you must or must not do in order to reduce the risk of injury to yourself and others.

⚠ NOTICE

This is a warning against anything which may cause damage to the vehicle or its equipment if the warning is ignored. You are informed about what you must or must not do in order to avoid or reduce the risk of damage to your Toyota and its equipment.

Safety symbol

Throughout this manual, you will also see the symbol of a circle with a slash through it. This means “Do not”, “Do not do this”, or “Do not let this happen”.

Keys

The following keys are provided with the vehicle.

▶ Vehicles with wireless remote control system

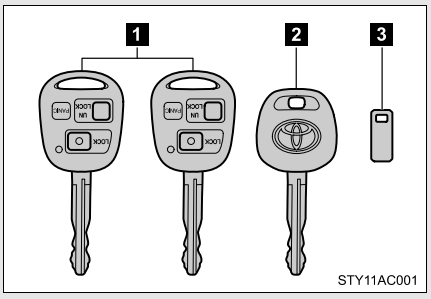

1 Master keys (with wireless remote control function)

Operating the wireless remote control function (P. 30)

2 Valet key

3 Key number plate

▶ Vehicles without wireless remote control system

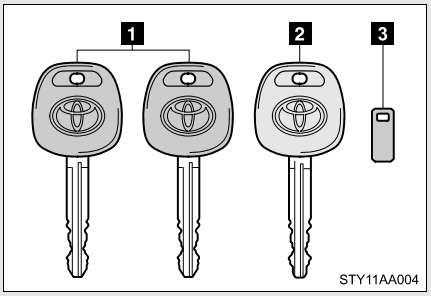

1 Master keys

2 Valet key

3 Key number plate

Key number plate

Keep the plate in a safe place such as your wallet, not in the vehicle. In the event that a key is lost, a new key can be made by your Toyota dealer using the key number plate. (P. 352)

NOTICE

To prevent key damage

- Do not subject the keys to strong shocks, expose them to high temperatures by placing them in direct sunlight, or get them wet.

NOTICE

■ **To prevent key damage**

● Do not expose the keys to electromagnetic materials or attach any material that blocks electromagnetic waves to the key surface.

Wireless remote control (if equipped)

The wireless remote control can be used to lock and unlock the vehicle from outside the vehicle.

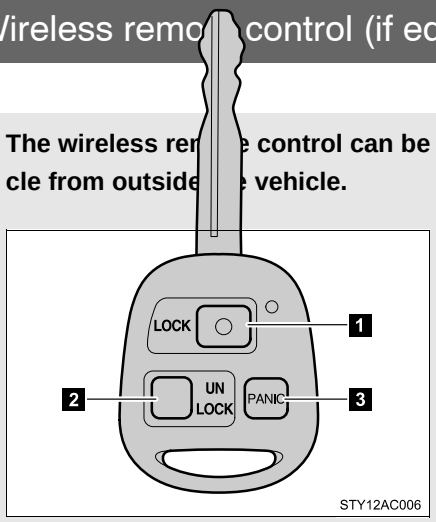

1 Locks all doors
2 Unlocks all doors
3 Sounds alarm (push and hold)

2−step unlocking function

When you push the UNLOCK button, the driver's door is unlocked. Pushing the button again within 3 seconds unlocks the other doors.

Operation signals

A buzzer sounds and the emergency flashers flash to indicate that the doors have been locked/unlocked. (Locked: Once; Unlocked: Twice)

Panic mode

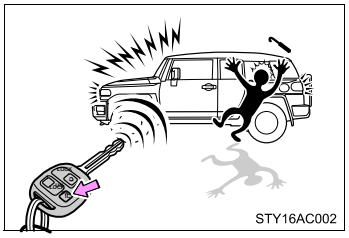

When PANIC button is pushed for longer than about one second, an alarm will sound for about 60 seconds and the vehicle lights will flash to deter any person from trying to break into or damage your vehicle.

To stop the alarm, push any button on the wireless remote control.

Door lock buzzer

If a door or glass hatch is not fully closed, a buzzer sounds for 10 seconds if an attempt to lock the door and glass hatch are made. Fully close the door and glass hatch to stop the buzzer, and lock the vehicle once more.

Key battery depletion

The standard battery life is 1 to 2 years. (The battery becomes depleted even if the key is not used.) If the wireless remote control function does not operate, the battery may be depleted. Replace the battery when necessary. (P. 301)

Security feature

If a door is not opened within approximately 60 seconds after the vehicle is unlocked, the security feature automatically locks the vehicle again.

Conditions affecting operation

The wireless remote control function may not operate normally in the following situations.

- Near a TV tower, radio station, electr ic power plant, airport or other facility that generates strong radio waves
- When carrying a portable radio, cell ular phone or other wireless communication device

Conditions affecting operation

- When multiple wireless keys are in the vicinity
- When the wireless key has come into contact with, or is covered by a metallic object
- When a wireless key (that emits radio waves) is being used nearby
- When the wireless key has been left near an electrical appliance such as a personal computer

Customization that can be configured at Toyota dealer

Settings (e.g. wireless remote control system) can be changed. (Customizable features P. 386)

Certification for wireless remote control

▶ For vehicles sold in U.S.A.

NOTE:
This device complies with Part 15 of the FCC Rules. Operation is subject to the following two conditions: (1) this device may not cause harmful interference, and (2) this device must accept any interference received, including interference that may cause undesired operation.

NOTICE:
This equipment has been tested and found to comply with the limits for a Class B digital device, pursuant to Part 15 of the FCC Rules. These limits are designed to provide reasonable protection against harmful interference in a residential installation. This equipment generates, uses and can radiate radio frequency energy and, if not installed and used in accordance with the instructions, may cause harmful interference to radio communications. However, there is no guarantee that interference will not occur in a particular installation. If this equipment does cause harmful interference to radio or television reception, which can be determined by turning the equipment off and on, the user is encouraged to try to correct the interference by one or more of the following measures:

- Reorient or relocate the receiving antenna.
- Increase the separation between the equipment and receiver.
- Connect the equipment into an outlet on a circuit different from that to which the receiver is connected.
- Consult the dealer or an experienced radio/TV technician for help.

FCC WARNING:
Changes or modifications not expressly approved by the party responsible for compliance could void the user's authority to operate the equipment.

▶ For vehicles sold in Canada

NOTE:
Operation is subject to the following two conditions: (1) this device may not cause interference, and (2) this device must accept any interference, including interference that may cause undesired operation of the device.

Side doors

The vehicle can be locked/unlocke d using the wireless remote con−trol, key or door lock switch.

■ Wireless remote control (if equipped)

P. 30

■ Key

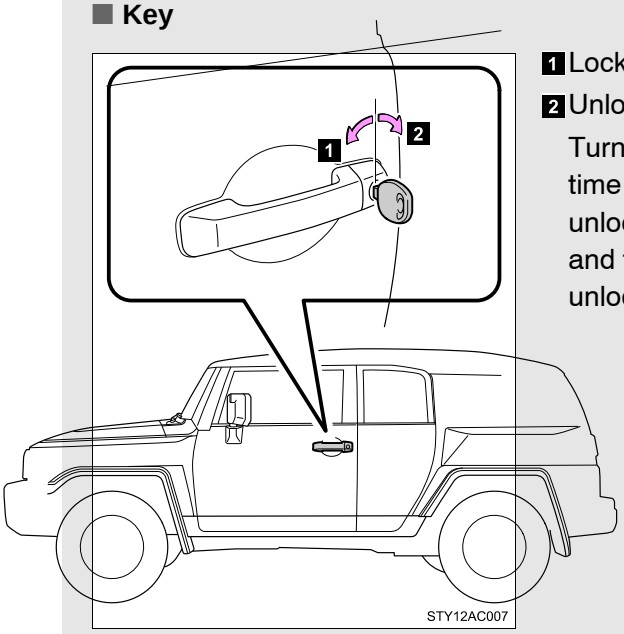

1 Locks all doors

2 Unlocks all doors

Turning the key a single time in the driver's door unlocks the driver's door, and turning the key again unlocks the other doors.

■ Door lock switch

▶ Driver's door lock switch

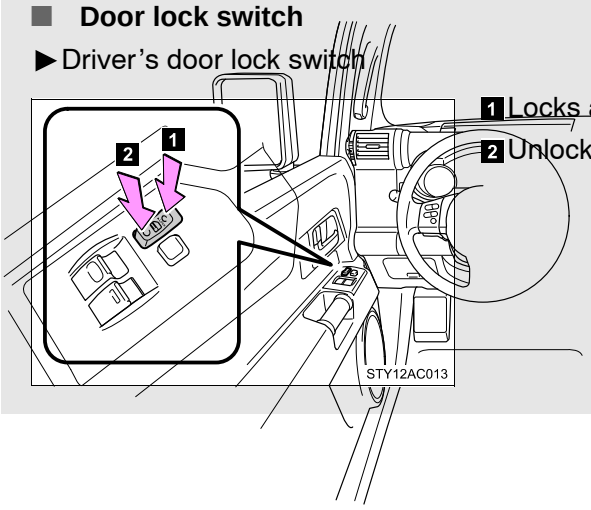

1 Locks all doors

2 Unlocks all doors

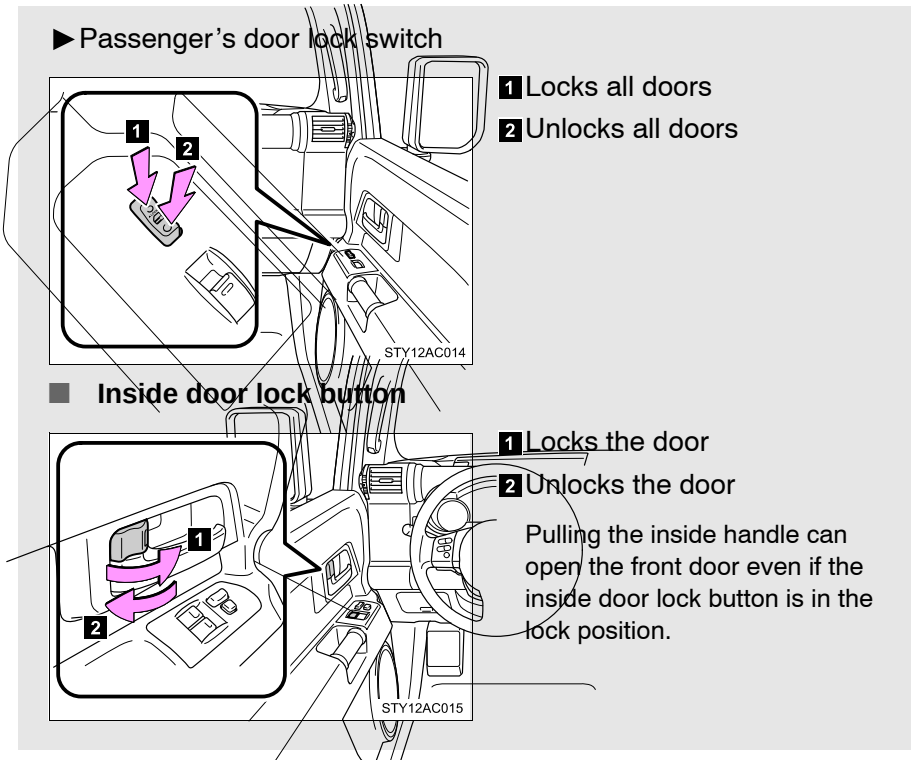

Locking the front doors from the outside without a key

STEP 1 Move the inside door lock button to the lock position.

STEP 2 Close the door.

The door cannot be locked if the dr iver's door is open and the key is in the engine switch.

Key reminder buzzer

A buzzer sounds if the driver's door is opened, while the engine switch is in the ACC or LOCK position to remind you to remove the key.

Customization that can be configured at Toyota dealer

Settings (e.g. unlocking function using a key) can be changed.
(Customizable features P. 386)

CAUTION

■ **To prevent an accident**

Observe the following precautions while driving the vehicle.
Failing to do so may result in a door opening and an occupant falling out, resulting in death or serious injury.

- Always use a seat belt.
- Always lock all doors.
- Ensure that all doors are properly closed.
- Do not pull the inside handle of the front door while driving.

Access doors

The access door (rear door) can be opened using the inside handle.

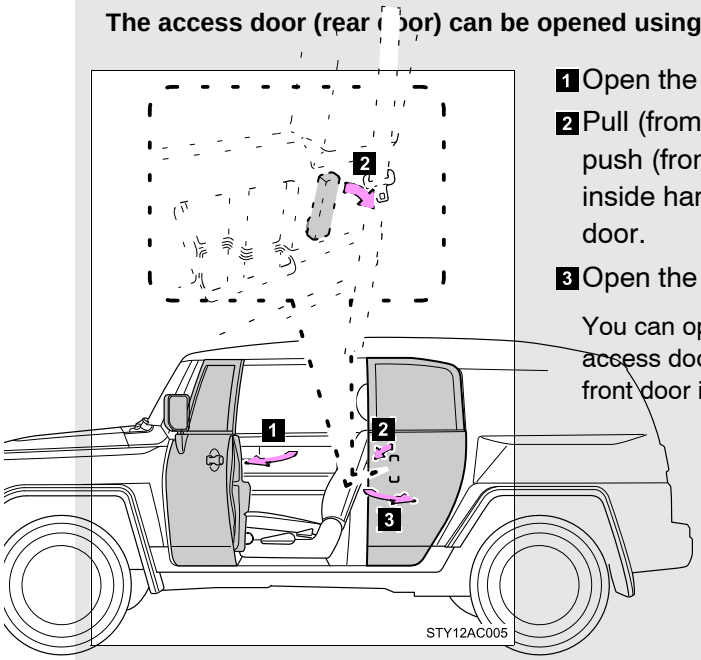

1 Open the front door widely

2 Pull (from the outside) or push (from the inside) the inside handle of the access door.

3 Open the access door

You can open and close the access door only when the front door is widely opened.

CAUTION

When closing the access door

Observe the following precautions.
Failure to do so may result in serious personal injury.

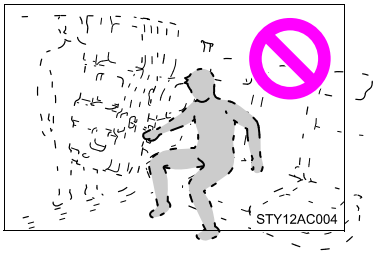

- Confirm safety of the area around.
- Keep the hands, fingers and other parts of the bodies of all occupants away from the access door.

NOTICE

When opening or closing the front door and access door

The front door and access door could be damaged if they hit each other when being opened or closed.

Back door

The back door can be locked/unlo cked using a key, wireless remote control or door lock switch.

■ Wireless remote control (if equipped)

P. 30

■ Key

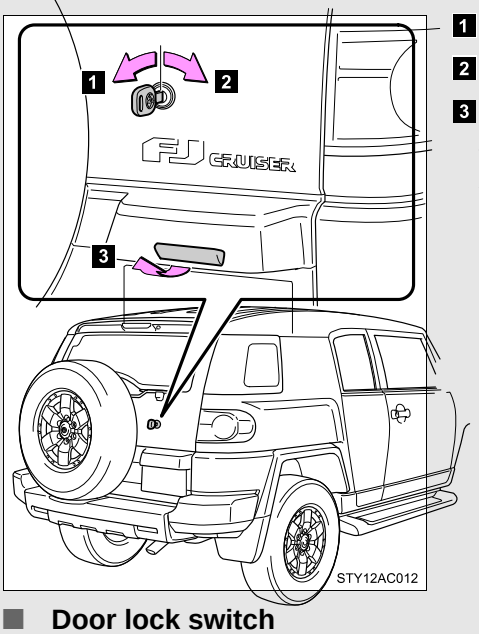

1 Unlocks the back door

2 Locks the back door

3 Opens the back door

When you turn the key clock−wise and hold it for about 1 second, the glass hatch opens. (P. 41)

■ Door lock switch

P. 33

Back door fixing function

The back door can be held in the following positions:

▶Half open position

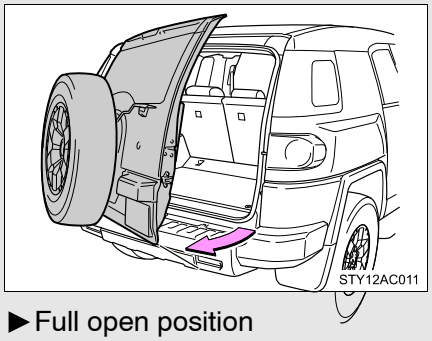

Open the back door to the half open position.

It cannot be held in this position when being closed.

▶Full open position

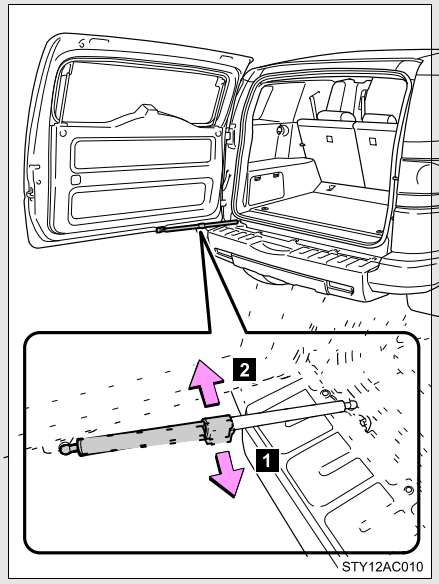

You can hold the back door in this position:

1 Lock the damper

2 Unlock the damper

When closing the door, be sure to unlock the damper.

Rear step bumper

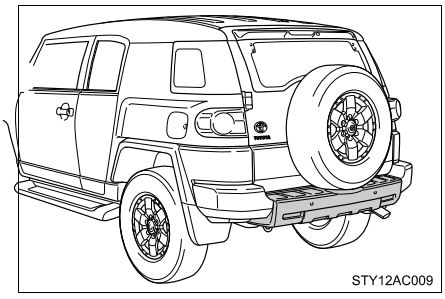

For rear end protection and easier step−up loading.

To get on the rear step bumper, use the shaded area in the illustration.

CAUTION

Caution while driving

Observe the following precautions.
Failure to do so may result in death or serious personal injury.

- Keep the back door and glass hatch closed.
  This not only keeps the luggage from being thrown out, but also prevents exhaust gases from entering the vehicle.
- Do not get on the rear step bumper.

NOTICE

To prevent damage to the back door components

- Do not apply any force, paint or let any other foreign matter on the damper.
- Ensure that the damper is unlocked before closing the back door.
- Do not allow more than one person to get on the rear step bumper at a time.

Glass hatch

The glass hatch can be opened using the key.

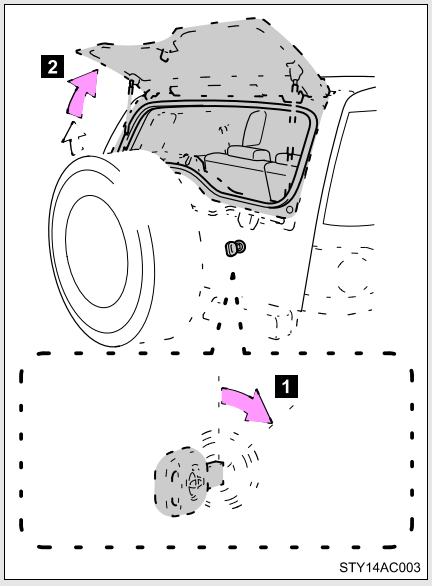

1 Turn the key clockwise and hold it for about 1 second.

2 Raise

Opening the glass hatch

- The glass hatch opens slightly, after the back door is locked.
- When the rear window wiper is working, the wiper returns to the original position and stops working.

  The wiper restarts its working about 3 seconds after the glass hatch is closed.

Closing the glass hatch

- Make sure that the glass hatch is securely closed after closing it.
  If the glass hatch is not securely closed, the rear window wiper and washer will not work.
- Be careful not to lock your keys in the vehicle.

CAUTION

Operating the glass hatch

Do not open the glass hatch while the vehicle is moving.

Caution while driving

Keep the back door and glass hatch closed.
This not only keeps the luggage from being thrown out but also prevents exhaust gases from entering the vehicle.

Before you close the glass hatch

To avoid death or serious personal injury, you must do the following.

- Always make sure there is nobody around the glass hatch.
- Make sure the heads, hands and other parts of the bodies of all occupants are kept completely inside the vehicle.

NOTICE

To prevent damage to the glass hatch components

Do not apply any force, paint or let any other foreign matter on the damper.

Front seats

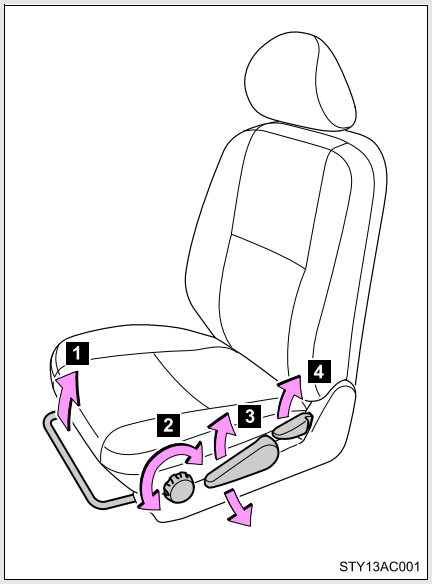

1 Seat position adjustment lever
2 Seat cushion angle adjustment knob (driver's side only)
3 Seat height adjustment lever (driver's side only)
4 Seatback angle adjustment lever

Waterproof and water−repellent seats

Waterproof and water−repellent seats are installed in your vehicle; however, the water−repellent effect does not last forever.

CAUTION

Seat adjustment

- Do not recline the seat more than necessary when the vehicle is in motion to reduce the risk of sliding under the lap belt.
  If the seat is too reclined, the lap belt may slide past the hips and apply restraint forces directly to the abdomen or your neck may contact the shoulder belt, increasing the risk of death or serious injury in the event of an accident.
- After adjusting the seat, make sure that the seat is locked in position.

Rear seats

The seatbacks of the rear seats can be folded down.

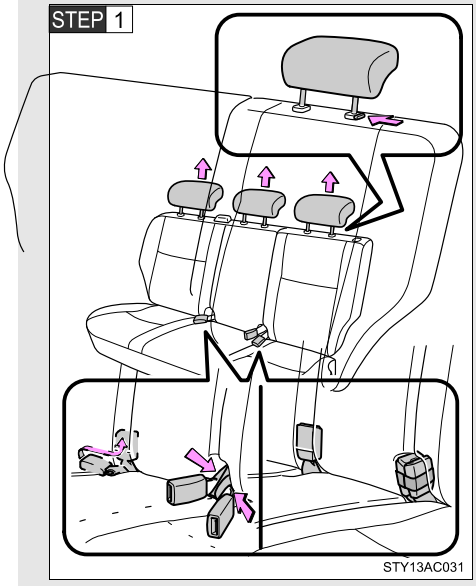

Stow the seat belt buckles and remove the head restraints.

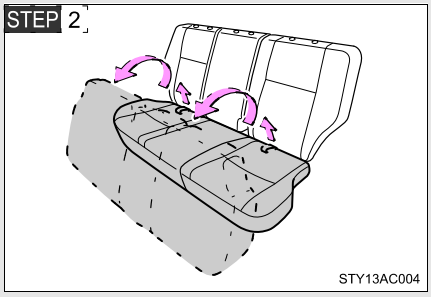

Swing the bottom cushion up by pulling the lock release strap.

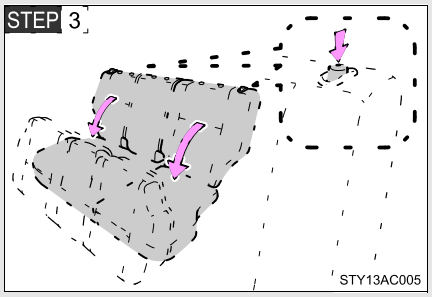

Push the lock release button and fold down the seatback.

Removing rear seat bottom cushions

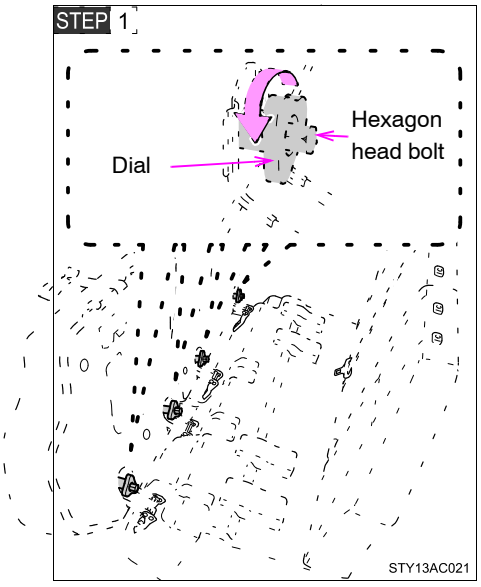

Loosen the bolts with the wrench at first and turn the dials with hands to remove them.

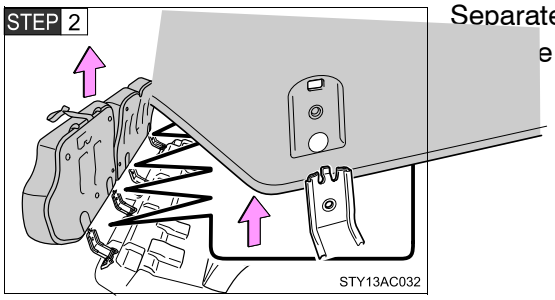

Separate the bottom cushion
e hinge.

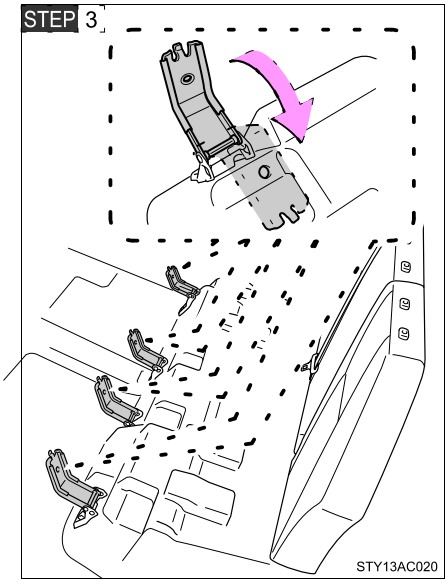

Fold the hinge as shown in the illustration.

If you cannot raise the seatback

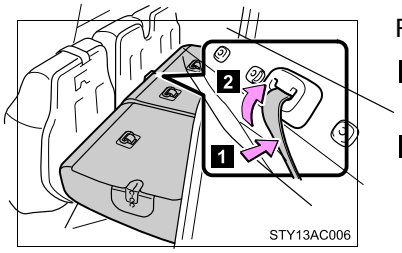

Release the seat belt lock by:

1 Pushing on the lower front edge of the seatback to slacken the seat belt.

2 Let the seat belt retract a little.

When the bottom cushion is reinstalled

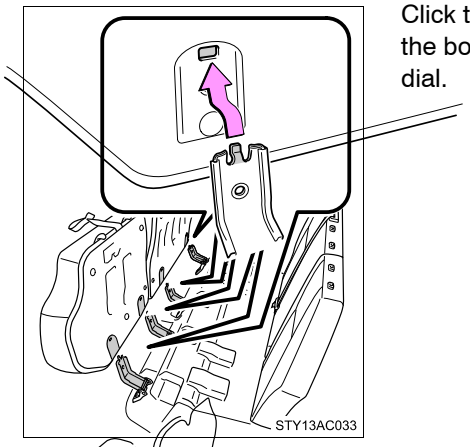

Click the claw of the hinge into the hole of the bottom cushion before refastening the dial.

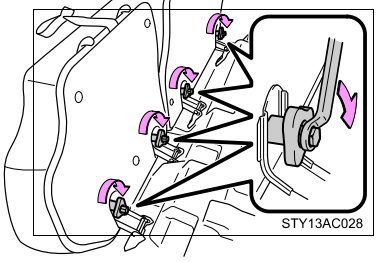

Firmly tighten the hexagon head bolts using a torque wrench.

Tightening torque:
12.5 ft·lbf (17 N·m, 1.7 kgf·m)

Waterproof and water−repellent seats

Waterproof and water−repellent seats are installed in your vehicle: however, the water−repellent effect does not last forever.

CAUTION

When the seatback is folded

Do not sit on or place anything on the seatback while driving.

When returning the seats to their original position

Observe the following precautions. Failure to do so may result in death or serious injury.

- Be careful not to get your hands or feet pinched in the seat.
- Make sure the seatbacks and bottom cushions are securely locked. Failure to do so will prevent the seat belt from operating properly.
- Check that the seat belts are not twisted or caught under the seat.
- Arrange the seat belts in the proper positions for ready use.

When removing or reinstalling the bottom cushion

Observe the following precautions. Failure to do so may result in death or serious injury.

- Do not get in the vehicle with the bottom cushions uninstalled.
- Do not leave the removed bottom cushion unsecured in the vehicle.
- Do not try to sit on or place anything on the removed bottom cushion.
- Do not drop the bottom cushion.
- Have the hexagon head bolts tightened with a torque wrench to 12.5 ft·lbf (17 N·m, 1.7 kgf·m), or have them tightened by your Toyota dealer. Failure to do so may cause the dials to be loosened and the bottom cushions to be removed.

NOTICE

Before folding down or removing the seats

- The seat belts buckles must be stowed.
- The head restraints must be removed before you fold down the seatback.

Head restraints

▶ Front seats

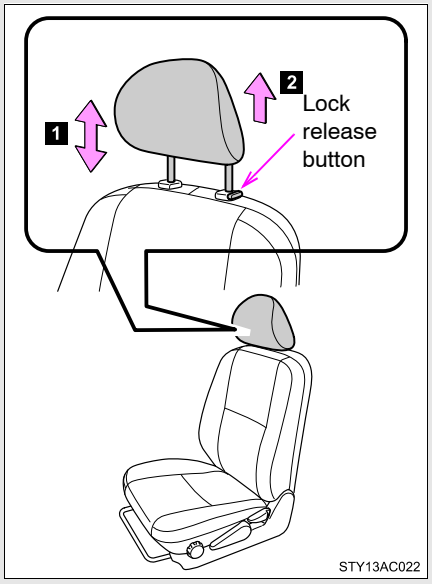

1 Vertical adjustment

Push and hold the lock release button when lowering the head restraint.

2 Removal

Pull the head restraint up while pushing the lock release but−ton.

▶ Rear seats

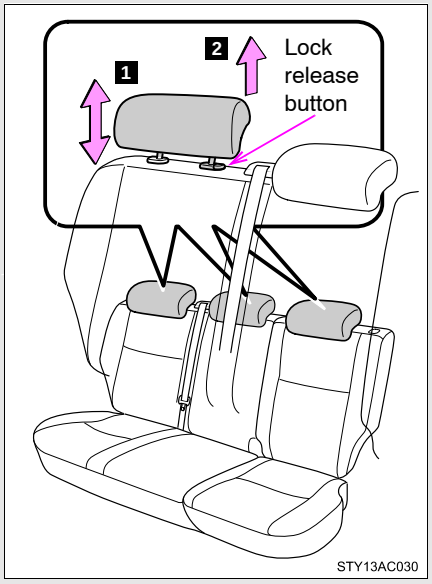

1 Vertical adjustment

Push and hold the lock release button when lowering the head restraint.

2 Removal

Pull the head restraint up while pushing the lock release but−ton.

Adjusting the height of the head restraints

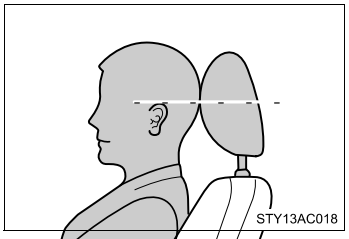

Make sure that the head restraints are adjusted so that the center of the head restraint is closest to the top of your ears.

Adjusting the rear seat head restraints

Always raise the head restraint one level from the stowed position when using.

Head restraints of different seats

The head restraints are specially designed for the seats on which they are installed.

CAUTION

Head restraint precautions

Observe the following precautions regarding the head restraints. Failure to do so may result in death or serious injury.

- Adjust the head restraints to the correct position at all times.
- Do not drive with the head restraints removed.

Seat belts

Make sure that all occupants are wearing their seat belts before driving the vehicle.

Correct use of the seat belts

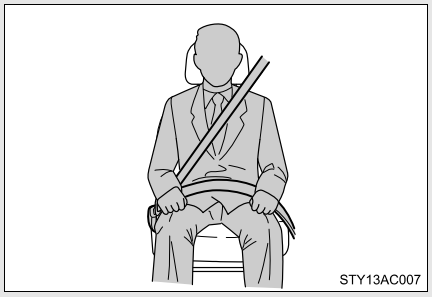

- Extend the shoulder belt so that it comes fully over the shoulder, but does not come into contact with the neck or slide off the shoulder.
- Position the lap belt as low as possible over the hips.
- Adjust the position of the seatback. Sit up straight and well back in the seat.
- Do not twist the seat belt.

Fastening and releasing the seat belt

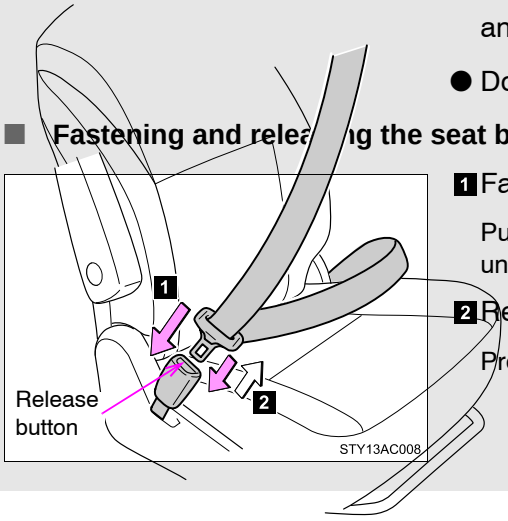

1 Fastening the belt

Push the tab into the buckle until a clicking sound is heard.

2 Releasing the belt

Press the release button.

Adjusting the height of the belt (front seats)

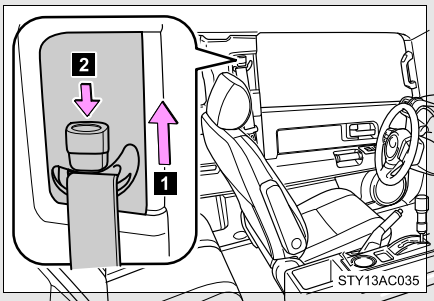

1 Up

Move the height adjuster up as needed until you hear a click.

2 Down

Push the lock release button and slide the height adjuster down.

Seat belt pretensioners (front seats)

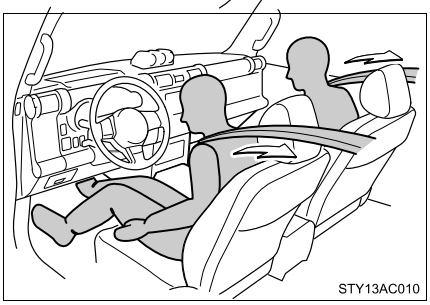

The pretensioner helps the seat belt to quickly restrain the occupant by retracting the seat belt when the vehicle is subjected to certain types of severe frontal collision.

The pretensioner may not activate in the event of a minor frontal impact, a side impact or a rear impact.

Emergency locking retractor (ELR)

The retractor will lock the belt during a sudden stop or on impact. It may also lock if you lean forward too quickly. A slow, easy motion will allow the belt to extend so that you can move around fully.

Automatic locking retractor (ALR)

When a passenger's shoulder belt is completely extended and then retracted even slightly, the belt is locked in that position and cannot be extended. This feature is used to hold the child restraint system (CRS) firmly. To free the belt again, fully retract the belt and then pull the belt out once more. (P. 90)

Pregnant women

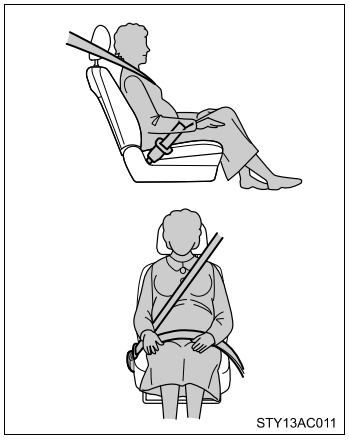

Obtain medical advice and wear the seat belt in the proper way. (P. 51)

Women who are pregnant should position the lap belt as low as possible over the hips in the same manner as other occupants. Extend the shoulder belt completely over the shoulder and position the belt across the chest. Avoid belt contact over the rounding of the abdominal area.

If the seat belt is not worn properly, not only a pregnant woman, but also the fetus could suffer death or serious injury as a result of sudden braking or a collision.

People suffering illness

Obtain medical advice and wear the seat belt in the proper way.

Child seat belt usage

The seat belts of your vehicle were principally designed for persons of adult size.

- Use a child restraint system appropriate for the child, until the child become large enough to properly wear the vehicle's seat belt. (P. 90)
- When the child becomes large enough to properly wear the vehicle's seat belt, follow the instructions on P. 51 regarding seat belt usage.

Replacing the belt after the pretensioner has been activated

The seat belts cannot be used after a pretensioner has been activated. After an accident, have the pretensioners inspected by your Toyota dealer. Make sure the pretensioners are replaced if they have been activated.

Seat belt extender

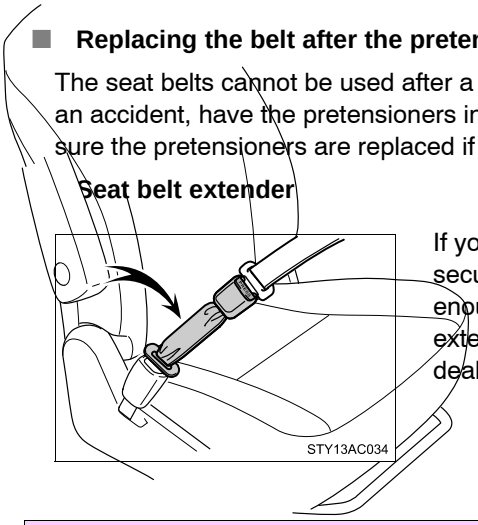

If your seat belts cannot be fastened securely because they are not long enough, a personalized seat belt extender is available from your Toyota dealer free of charge.

CAUTION

Wearing a seat belt

Observe the following precautions to reduce the risk of injury in the event of sudden braking or an accident.
Failing to do so may cause death or severe injury.

- Ensure that all passengers wear a seat belt.
- Always wear a seat belt properly.
- Each seat belt should be used by one person only. Do not use a seat belt for more than one person at once, including children.
- Toyota recommends that children be seated in the rear seat and always use a seat belt and/or an appropriate child restraint system.
- Do not recline the seat any more than necessary to achieve a proper seating position. The seat belt is most effective when the occupants are sitting up straight and well back in the seats.
- Do not wear the shoulder belt under your arm.
- Always wear your seat belt low and snug across your hips.

CAUTION

■ **Seat belt pretensioners**

Do not place anything, such as a cushion, on the front passenger's seat. Doing so will disperse the passenger's weight, which prevents the sensor from detecting the passenger's weight properly. As a result, the seat belt pretensioner for the front passenger's seat may not activate in the event of a collision.

■ **Seat belt damage and wear**

- Do not damage the seat belts by allowing the belt, plate, or buckle to be jammed in the door.
- Inspect the seat belt system periodically. Check for cuts, fraying, and loose parts. Do not use a damaged seat belt until it is replaced. Damaged seat belt cannot protect an occupant from death or serious injury.
- Ensure that the belt and tab are locked and the belt is not twisted. If the seat belt does not function correctly, immediately contact your Toyota dealer.
- Replace the seat assembly, including the belts, if your vehicle has been involved in a serious accident, even if there is no obvious damage.
- Do not attempt to install, remove, modify, disassemble or dispose of the seat belts. Have any necessary repairs carried out by your Toyota dealer. Inappropriate handling of the pretensioner may prevent it from operating properly resulting in death or serious injury.

■ **Using a seat belt extender**

- Do not wear the seat belt extender, if you can fasten the seat belt without the extender.
- Do not use the seat belt extender when installing a child restraint system, because the belt will not securely hold the child restraint system, increasing the risk of death or serious injury in the event of a collision.
- The personalized extender may not be safe on another vehicle, when used by another person, or at a different seating position other than the one originally intended.

NOTICE

When using a seat belt extender

When releasing the seat belt, press on the buckle release button on the extender, not on the seat belt.
This helps prevent damage to the vehicle interior and the extender itself.

Steering wheel

The steering wheel can be adjusted to a comfortable position.

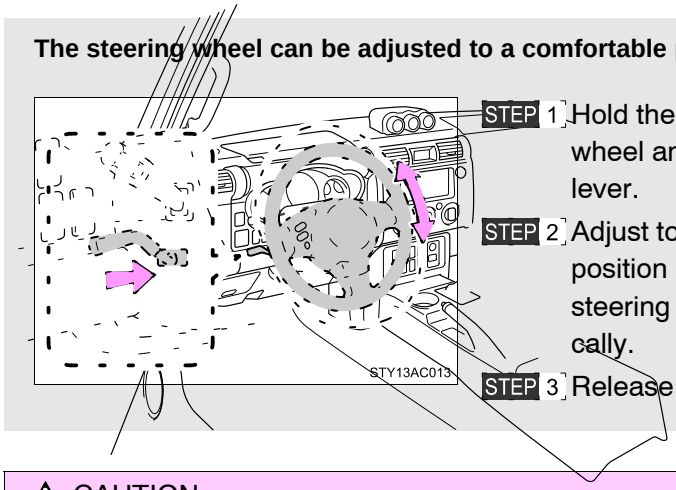

STEP 1 Hold the steering wheel and pull the lever.

STEP 2 Adjust to the ideal position by moving the steering wheel vertically.

STEP 3 Release the lever.

⚠ CAUTION

■ **Caution while driving**

Do not adjust the steering wheel while driving.
Doing so may cause the driver to mishandle the vehicle and an accident may occur resulting in death or serious injury.

■ **After adjusting the steering wheel**

Make sure that the steering wheel is securely locked.
Otherwise, the steering wheel may move suddenly, possibly causing an accident and resulting in death or serious injury.

Anti−glare inside rear view mirror

Glare from the headlights of vehicles behind can be reduced by using the following functions.

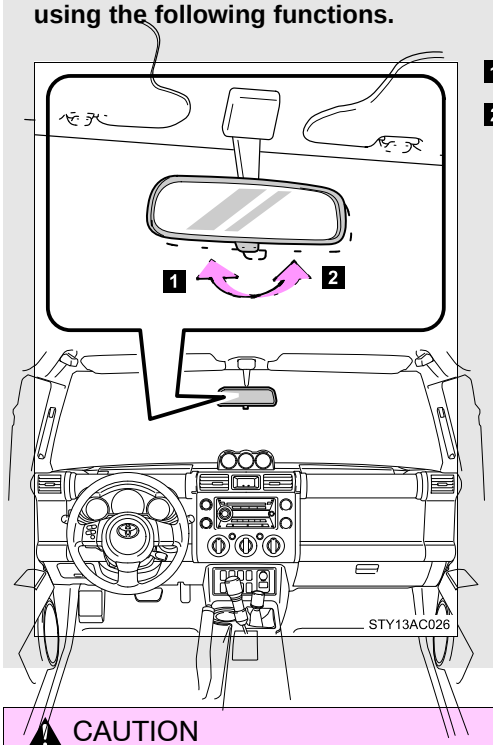

1 Normal position

2 Anti−glare position

CAUTION

■ **Caution while driving**

Do not adjust the position of the mirror while driving.
Doing so may lead to mishandling of the vehicle and an accident, resulting in death or serious injury.

Outside rear view mirrors

Mirror angle can be adjusted

▶Power−adjustable type

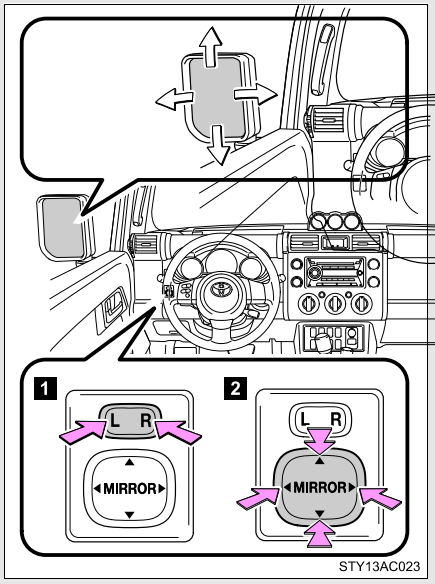

1 Select a mirror to adjust.

(L: left or R: right)

2 Adjust the mirror up, down, in or out using the switch.

▶Manually adjustable type

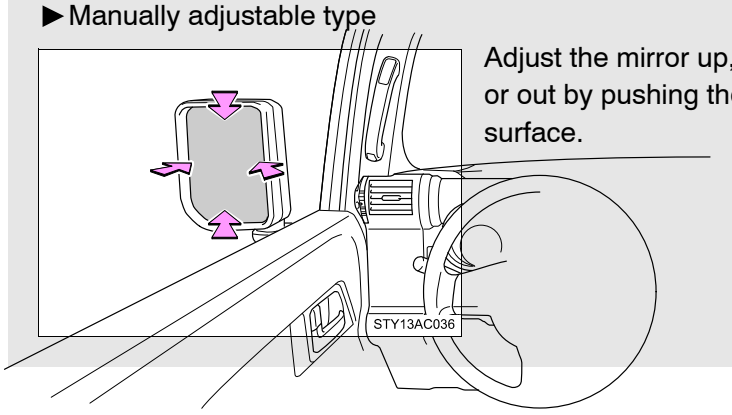

Adjust the mirror up, down, in or out by pushing the mirror surface.

Folding back the mirrors

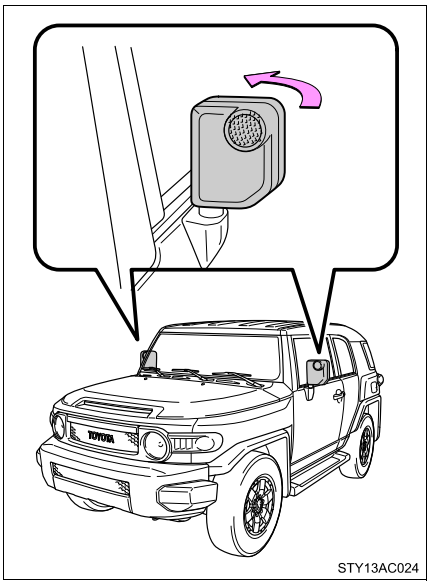

Push backward to fold the mirrors.

Mirror operating conditions (with power−adjustable type only)

The engine switch is in the ACC or ON position.

CAUTION

When driving the vehicle

Observe the following precautions while driving.
Failing to do so may result in loss of control of the vehicle and cause an accident, resulting in death or serious injury.

- Do not adjust the mirrors while driving.
- Do not drive with the mirrors folded back.
- Both the driver and passenger side mirrors must be extended and properly adjusted before driving.

NOTICE

If ice should jam the mirror

Do not operate the control or scrape the mirror face. Use a spray de−icer to free the mirror.

Power windows

The power windows can be opened/closed using the following switches.

▶Driver's power window switches

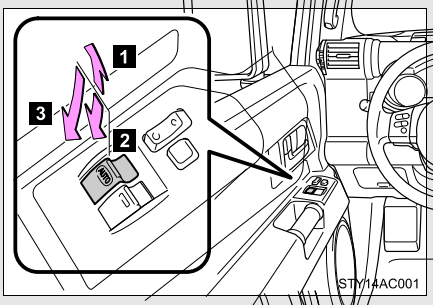

1 Closing

2 Opening

3 One−touch opening (driver's window only)*

*: Pressing the switch in the opposite direction will stop window travel partway.

▶Front passenger's power window switch

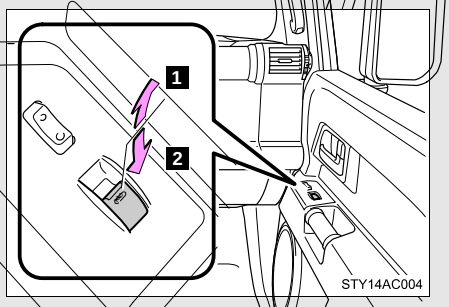

1 Closing

2 Opening

Lock switch

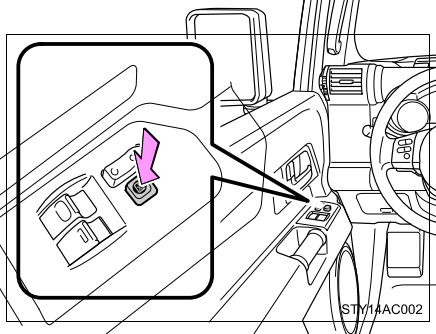

Press the switch down to lock passenger window switches.

Use this switch to prevent children from accidentally opening or closing a passenger window.

The power windows can be operated when

The engine switch is in the ON position.

Operating the power windows after turning the engine switch off

The power windows can be operated for approximately 45 seconds even after the engine switch is turned off. They cannot, however, be operated once either front door is opened.

CAUTION

Closing the windows

Observe the following precautions.
Failing to do so may result in death or serious injury.

- Check to make sure that all passengers do not have any part of their body in a position where it could be caught when a window is being operated.
- Do not allow children to operate the power windows.
  Closing a power window on someone can cause serious injury, and in some instances, even death.

Opening the fuel tank cap

Perform the following steps to open the fuel tank cap.

Before refueling the vehicle

Turn the engine switch off and ensure that all the doors, windows and glass hatch are closed.

Opening the fuel tank cap

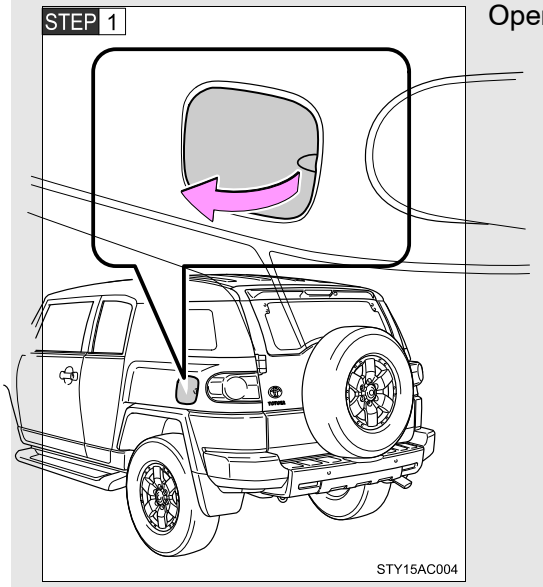

Open the fuel filler door.

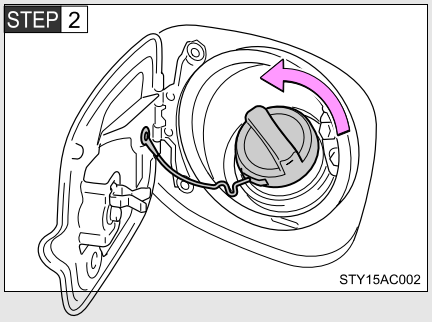

Turn the fuel tank cap slowly to open.

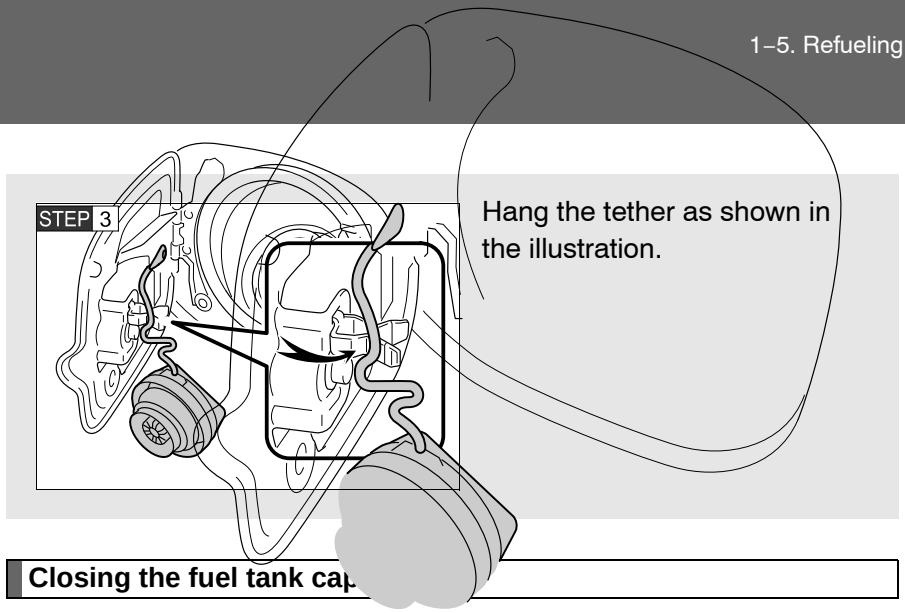

Hang the tether as shown in the illustration.

Closing the fuel tank cap

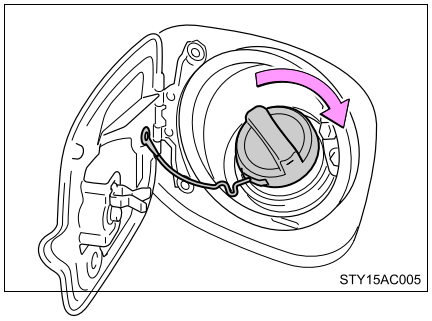

When replacing the fuel tank cap, turn it until a clicking sound is heard.

After releasing your hand, the cap will turn slightly to the opposite direction.

Fuel types

Use premium unleaded gasoline. (91 Octane Rating [Research Octane Number 96] or higher)

Fuel tank capacity

Approximately 19.0 gal. (72.0 L, 15.8 Imp. gal.)

CAUTION

Refueling the vehicle

Observe the following precautions while refueling the vehicle.
Failure to do so, may result in death or serious injury.

- Touch the vehicle or some other metal surface to discharge any static electricity.
  Sparks resulting from discharging static electricity may cause the fuel vapors to ignite.
- Always hold the grips on the fuel tank cap and turn it slowly to remove it.
  A whooshing sound may be heard when the fuel tank cap is loosened.
  Wait until the sound cannot be heard before fully removing the cap.
  In hot weather, pressurized fuel may spray out of the filler neck and cause injury.
- Do not allow anyone that has not discharged static electricity from their bodies to come close to an open fuel tank.
- Do not inhale vaporized fuel.
  Fuel contains substances that are harmful if inhaled.
- Do not smoke while refueling the vehicle.
  Doing so may cause the fuel to ignite and cause a fire.
- Do not return to the vehicle or touch any person or object that is statically charged.
  This may cause static electricity to build up, resulting in a possible engine hazard.

When replacing the fuel tank cap

Do not use anything but a genuine Toyota fuel tank cap designed for your vehicle. Doing so may cause a fire or other incident which may result in death or serious injury.

NOTICE

Refueling

Do not spill fuel during refueling.
Doing so may damage the vehicle, such as causing the exhaust systems to operate abnormally or damaging fuel system components or the vehicle's painted surface.

To prevent damage to the fuel filler door

Do not apply excessive force.

Engine immobilizer system

The vehicle's keys have built−in transponder chips that prevent the engine from starting if the key has not been previously registered in the vehicle's on−board computer.

Never leave the keys inside the vehicle when you leave the vehicle.

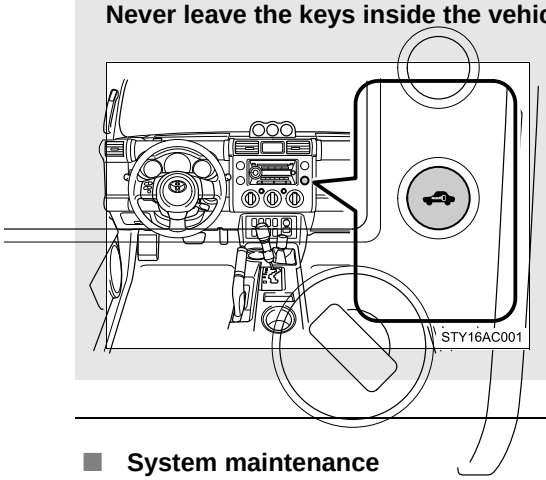

The indicator light flashes after the key has been removed from the engine switch to indicate that the system is operating.

System maintenance

The vehicle has a maintenance−free type of engine immobilizer system.

Conditions that may cause the system to malfunction

- If the key is in contact with a metallic object
- If the key is in close proximity to or touching a key to the security system (key with a built−in transponder chip) of another vehicle

Certifications for the engine immobilizer system

▶ For vehicles sold in U.S.A.

FCC ID: MOZRI−20BTY

This device complies with Part 15 of the FCC Rules. Operation is subject to the following two conditions: (1) this device may not cause harmful interference, and (2) this device must accept any interference received, including interference that may cause undesired operation.

FCC WARNING:

Changes or modifications not expressly approved by the party responsible for compliance could void the user's authority to operate the equipment.

▶For vehicles sold in Canada

This device complies with RSS−210 of Industry Canada. Operation is subject to the following two conditions: (1) this device may not cause interference, and (2) this device must accept any interference, including interference that may cause undesired operation of the device.

⚠ NOTICE

■ **To prevent damage to the key**

Do not modify, remove or disable the engine immobilizer system. If any unauthorized changes or modifications are made, the proper operation of the system cannot be guaranteed.

Theft prevention labels (U.S.A.)

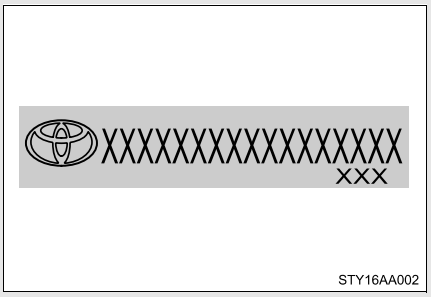

These labels are attached to the vehicle to reduce vehicle theft by facilitating the tracing and recovery of parts from stolen vehicles. Do not remove under penalty of law.

Correct driving posture

Drive in a good posture as follows:

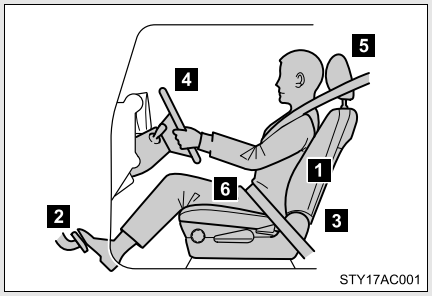

1. Sit upright and well back in the seat. (P. 43)
2. Adjust the position of the seat forward or backward to ensure the pedals can be reached and easily depressed to the extent required. (P. 43)
3. Adjust the seatback so that the controls are easily operable.
4. Adjust the tilt positions of the steering wheel downward so the airbag is facing your chest. (P. 57)
5. Lock the head restraint in place with the center of the head restraint closest to the top of your ears. (P. 49)
6. Wear the seat belt correctly. (P. 51)

CAUTION

While driving

- Do not adjust the position of the driver's seat while driving.
  Doing so could cause the driver to lose control of the vehicle.
- Do not place a cushion between the driver or passenger and the seatback.
  A cushion may prevent correct posture from being achieved, and reduce the effectiveness of the seat belt and head restraint, increasing the risk of death or serious injury to the driver or passenger.
- Do not place anything under the front seats.
  Objects placed under the front seats may become jammed in the seat tracks and stop the seat from locking in place. This may lead to an accident. The adjustment mechanism may also be damaged.

Adjusting the seat position

- Take care when adjusting the seat position to ensure that other passengers are not injured by the moving seat.
- Do not put your hands under the seat or near the moving parts to avoid injury.
  Fingers or hands may become jammed in the seat mechanism.

SRS airbags

The SRS airbags inflate when the vehicle is subjected to certain types of severe impacts that may cause significant injury to the occupants. They work together with the seat belts to help reduce the risk of death or serious injury.

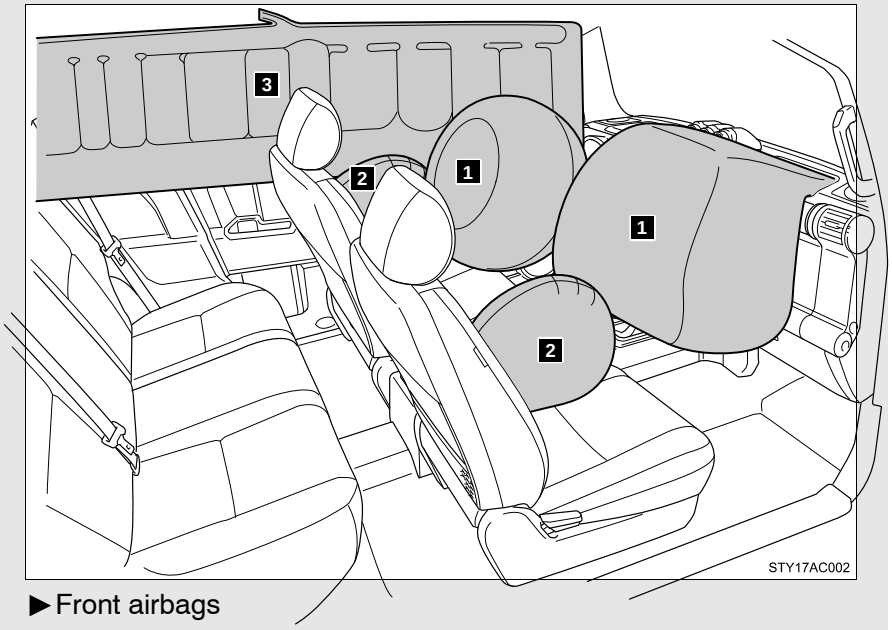

▶ Front airbags

1 Driver airbag/front passenger airbag
Can help protect the head and ches t of the driver and front passenger from impact with interior components.

▶ Side and curtain shield airbags

2 Side airbags
Can help protect the torso of the front seat occupants.

3 Curtain shield airbags
Can help protect primarily the head of outside occupants.

Airbag system components

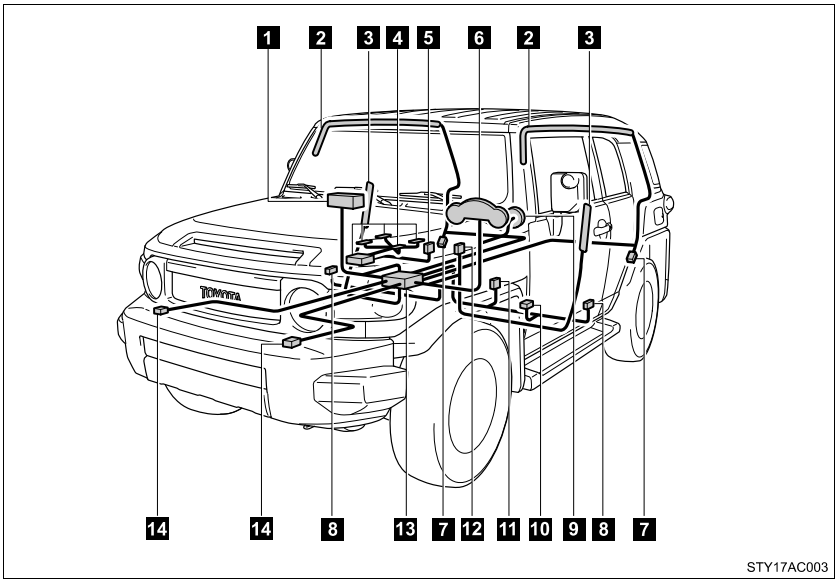

1 Front passenger airbag
2 Curtain shield airbags
3 Side airbags
4 Occupant detection system (ECU and sensors)
5 Front passenger's seat belt buckle switch
6 SRS warning light
7 Curtain shield airbag sensors
8 Side and curtain shield airbag sensors
9 Driver airbag
10 Driver's seat position sensor
11 Driver's seat belt buckle switch
12 AIR BAG ON and AIR BAG OFF indicator lights
13 Airbag sensor assembly
14 Front airbag sensors

Your vehicle is equipped with ADVANCED AIRBAGS designed based on US motor vehicle safety standards (FMVSS208). The airbag system controls airbag deployment po wer for the driver and front passenger. The driver airbag system consists of the driver seat's position sensor etc. The front passenger's airbag system consists of the front passenger occupant classification sensor etc.

The main SRS airbag system components are shown above. The SRS airbag system is controlled by the airbag sensor assembly. The airbag sensor assembly consists of a safing sensor and an airbag sensor.

In certain types of severe frontal or side impacts, the SRS airbag system triggers the airbag inflators. A chemical reaction in the inflators quickly fills the airbags with non−toxic gas to help rest rain the motion of the occupants.

SRS warning light

This warning light system monitors the airbag sensor assembly, front airbag sensors, side and curtain shield airbag sensor assemblies, curtain shield airbag sensor assemblies, driver's seat position sensor, driver's seat belt buckle switch, front passenger occupant classification system, AIR BAG ON indicator light, AIR BAG OFF indicator light, front passenger's seat belt buckle switch, seat belt pretensioner assemblies, inflators, interconnecting wiring and power sources. (P. 332)

If the SRS airbags deploy (inflate)

- Bruising and slight abrasions may result from contact with a deploying (inflating) SRS airbag.
- A loud noise and white powder will be emitted.
- Parts of the airbag module (steering wheel hub, airbag cover and inflator) as well as the front seats, and parts of the front and rear pillars and roof side rail, may be hot for several minutes. The airbag itself may also be hot.
- The front windshield may crack.

Operating conditions (front airbags)

- The SRS front airbags will deploy if the severity of the frontal impact is above the designed threshold level, comparable to an approximate 15 mph (25 km/h) collision when the vehicle impacts straight into a fixed barrier that does not move or deform.

  However, this threshold velocity will be considerably higher if the vehicle strikes an object, such as a parked vehicle or sign pole, which can move or deform on impact, or if the vehicle is involved in an underride collision (e.g. a collision in which the front of the vehicle “underrides”, or goes under, the bed of a truck, etc.).

- It is possible that in some collisions where the forward deceleration of the vehicle is very close to the designed threshold level, the SRS front airbags and the seat belt pretensioners may not activate together.

- The SRS front passenger airbag will not activate if there is no passenger sitting in the front passenger seat. However, the front passenger airbag may deploy if luggage is put in the seat, even if the seat is unoccupied. (P. 85)

Operating conditions (side airbags and curtain shield airbags)

- The SRS side airbags and curtain shield airbags are designed to inflate when the passenger compartment is subjected to a severe impact from the side.

- The SRS side airbag on the passenger seat will not activate if there is no passenger sitting in the front passenger seat. However, the side airbag on the passenger seat may deploy if luggage is put in the seat, even if the seat is unoccupied. (P. 85)

Conditions under which the SRS airbags may deploy (inflate), other than a collision

The SRS front airbags may also deploy if a serious impact occurs to the underside of your vehicle. Some examples are shown in the illustration.

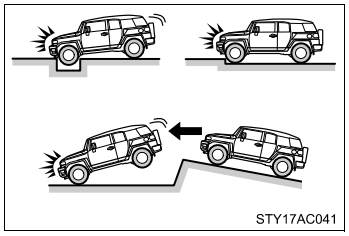

- Hitting a curb, edge of pavement or hard surface
- Falling into or jumping over a deep hole
- Landing hard or vehicle falling

Types of collisions that may not deploy the SRS airbag (front airbags)

The SRS front airbags are generally not designed to inflate if the vehicle is involved in a side or rear collision, if it rolls over, or if it is involved in a low−speed frontal collision. But, whenever a collision of any type causes sufficient forward deceleration of the vehicle, deployment of the SRS front airbags may occur.

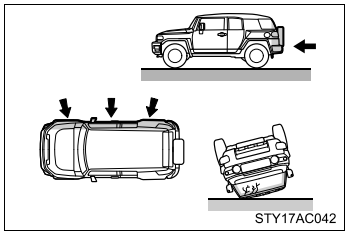

- Collision from the side
- Collision from the rear
- Vehicle rollover

Types of collisions that may not deploy the SRS airbag (side airbags and curtain shield airbags)

The SRS side airbag and curtain shield airbag system may not activate if the vehicle is subjected to a collision from the side at certain angles, or a collision to the side of the vehicle body other than the passenger compartment.

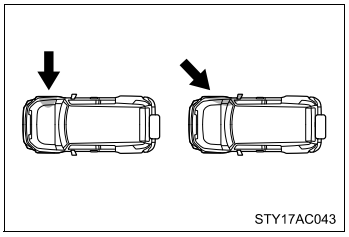

- Collision from the side to the vehicle body other than the passenger compartment
- Collision from the side at an angle

The SRS side airbags and curtain shield airbags are not generally designed to inflate if the vehicle is involved in a frontal or rear collision, if it rolls over, or if it is involved in a low−speed side collision.

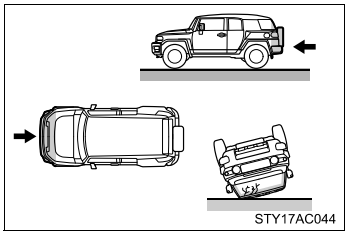

- Collision from the front
- Collision from the rear
- Vehicle rollover

When to contact your Toyota dealer

In the following cases, contact your Toyota dealer as soon as possible. Do not disconnect the battery cables before contacting your Toyota dealer.

- Any of the SRS airbags have been inflated.

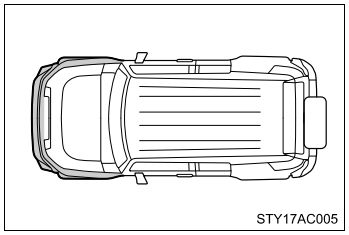

- The front of the vehicle is damaged or deformed, or was involved in an accident that was not severe enough to cause the SRS airbags to inflate.

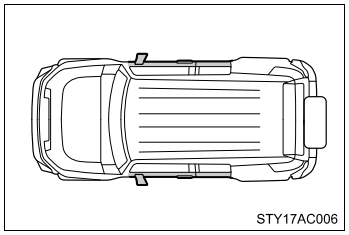

- A portion of a door is damaged or deformed, or the vehicle was involved in an accident that was not severe enough to cause the SRS side airbags and curtain shield airbags to inflate.

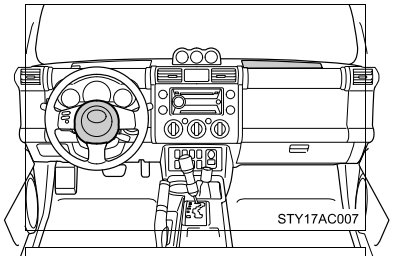

- The pad section of the steering wheel or dashboard near the front passenger airbag is scratched, cracked, or otherwise damaged.

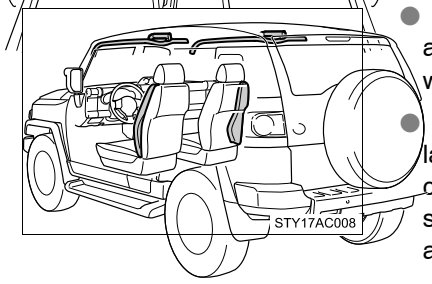

- The surface of the seats with the side airbag is scratched, cracked or otherwise damaged.
- The portion of the front pillars, rear pillars or roof side rail garnishes (padding) containing the curtain shield airbags is scratched, cracked or otherwise damaged.

CAUTION

SRS airbag precautions

Observe the following precautions regarding the airbags.
Failure to do so may cause death or serious injury.

- The driver and all passengers in the vehicle must wear their seat belts properly.
  The SRS airbags are supplemental devices to be used with the seat belts.
- The SRS driver airbag deploys with considerable force, and can cause death or serious injury especially if the driver is very close to the airbag.
  The National Highway Traffic Safety Administration (“NHTSA”) advises:

Since the risk zone for driver airbag is the first 2 − 3 in. (50 − 75 mm) of inflation, placing yourself 10 in. (250 mm) fr om your driver airbag provides you with a clear margin of safety. This distance is measured from the center of the steering wheel to your breastbone. If you sit less than 10 in. (250 mm) away now, you can change your driving position in several ways:

- Move your seat to the rear as far as you can while still reaching the pedals comfortably.
- Slightly recline the back of the seat.
  Although vehicle designs vary, many drivers can achieve the 10 in. (250 mm) distance, even with the driver seat all the way forward, simply by reclining the back of the seat somewhat. If reclining the back of your seat makes it hard to see the road, raise yourself by using a firm, non−slippery cushion, or raise the seat if your vehicle has that feature.
- If your steering wheel is adjustable, tilt it downward. This points the airbag toward your chest instead of your head and neck.

The seat should be adjusted as recommended by NHTSA above, while still maintaining control of the foot pedals, steering wheel, and your view of the instrument panel controls.

CAUTION

■ **SRS airbag precautions**

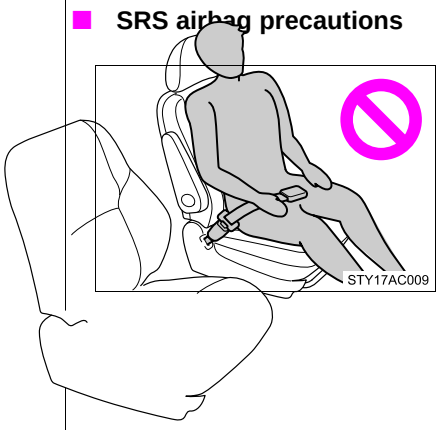

- If the seat belt extender has been connected to the driver's seat belt buckle but the seat belt extender has not also been fastened to the latch plate of the driver's seat belt, the SRS driver's airbag system will judge that the driver is wearing the seat belt even though the seat belt has not been connected. In this case, the driver's airbag may not activate correctly in a collision, resulting in death or serious injury in the event of collision. Be sure to wear the seat belt with the seat belt extender.
- The SRS front passenger airbag also deploys with considerable force, and can cause death or serious injury especially if the front passenger is very close to the airbag. The front passenger seat should be as far from the airbag as possible with the seatback adjusted, so the front passenger sits upright.
- Improperly seated and/or restrainednfants and children can be killed or seriously injured by a deploying airbag. An infant or child who is too small to use a seat belt should be properly secured using a child restraint system. Toyota strongly recommends that all infants and children be placed in the rear seats of the vehicle and properly restrained. The rear seats are the safest for infants and children. (P. 90)

CAUTION

SRS airbag precautions

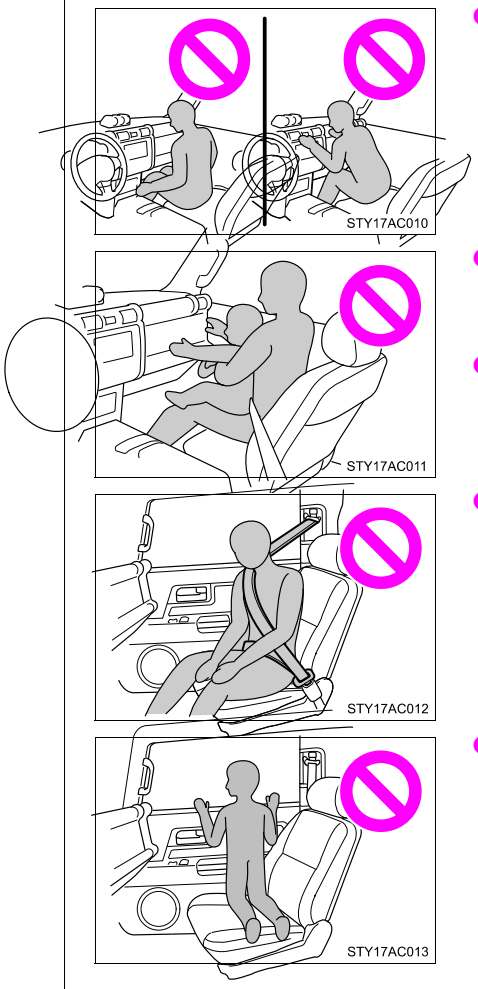

- Do not sit on the edge of the seat or lean against the dashboard.
- Do not allow a child to sit on the knees of a front passenger while the vehicle is moving.
- Do not drive the vehicle while the driver or passenger has items resting on their knees.
- Do not lean against the door, the roof side rail or the front, side and rear pil–lars.
- Do not allow anyone to kneel on the passenger seat toward the door or put their head or hands outside the vehicle.

CAUTION

■ **SRS airbag precautions**

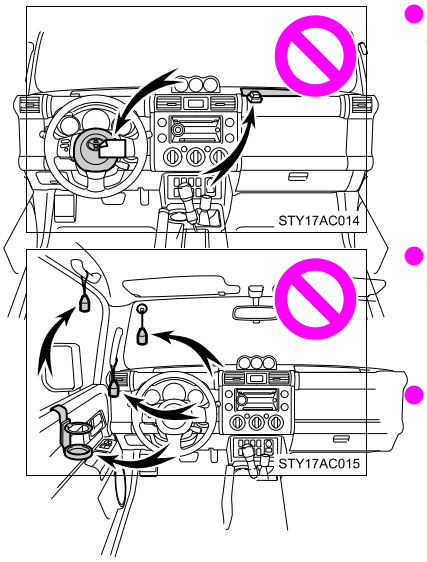

- Do not attach anything to or lean anything against areas such as the dashboard or steering wheel pad.
  These items can become projectiles when SRS driver and front passenger airbags deploy.

- Do not attach anything to areas such as the door, windshield glass, side door glass, front and rear pillars, roof side rail or assist grip.

- Do not hang coat hangers or other hard objects on the coat hooks. All of these items could become projectiles and seriously injure or kill you, should the SRS curtain shield airbag deploy.

- Do not use seat accessories which cover the parts where the SRS side airbags inflate as they may interfere with inflation of the airbags.

- Do not strike or apply significant levels of force to the area of the SRS airbag components shown on P. 74.
  Doing so can cause the SRS airbags to malfunction.

- Do not touch any of the component parts immediately after the SRS airbags have deployed (inflated) as they may be hot.

- If breathing becomes difficult after the SRS airbag has deployed, open a door or window to allow fresh air in, or leave the vehicle if it is safe to do so. Wash off any residue as soon as possible to prevent skin irritation.

- If the areas where the SRS airbags are stored, such as the steering wheel pad and front and rear pillar garnishes, are damaged or cracked, have them replaced by your Toyota dealer.

CAUTION

Modification and disposal of SRS airbag system components

Do not dispose of your vehicle or perform any of the following modifications without consulting your Toyota dealer.
The SRS airbags may malfunction or deploy (inflate) accidentally, causing death or serious injury.

- Installation, removal, disassembly and repair of the SRS airbags.
- Repairs, modifications, removal or replacement of the steering wheel, instrument panel, dashboard, seats or seat upholstery, front and rear pillars or roof side rails.
- Repairs or modifications of the front fender, front bumper, or side of the occupant compartment.
- Installation of snow plows, winches, etc. to the front grille (bull bars, kangaroo bar etc.).
- Modifications to the vehicle's suspension system.
- Installation of electronic devices such as mobile two−way radios or CD players.
- Modifications to your vehicle for a person with a physical disability.

Front passenger occupant classification system

Your vehicle is equipped with a front passenger occupant classification system. This system detects the conditions of the front passenger seat and activates or deactivates the devices for front passenger.

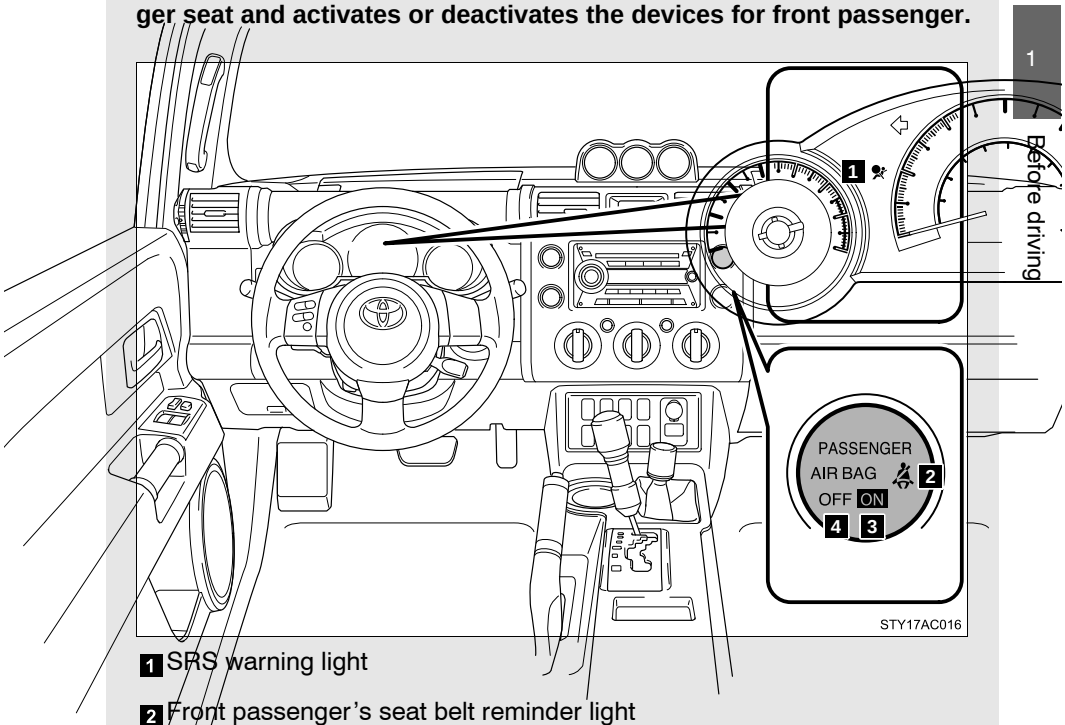

1 SRS warning light

2 Front passenger's seat belt reminder light

3 AIR BAG ON indicator light

4 AIR BAG OFF indicator light

Condition and operation in the front passenger occupant classification system

Adult[*1]

Indicator/ warning light	AIR BAG ON and AIR BAG OFF indicator lights	AIR BAG ON
	SRS warning light	Off
	Front passenger's seat belt reminder light	Flashing[*2]
Devices	Front passenger airbag	Activated
	Side airbag on the front passenger seat	
	Curtain shield airbag in the front passenger side	
	Front passenger's seat belt pretensioner	

Child[*3] or child restraint system[*4]

Indicator/ warning light	AIR BAG ON and AIR BAG OFF indicator lights	AIR BAG OFF[*5]
	SRS warning light	Off
	Front passenger's seat belt reminder light	Flashing[*2]
Devices	Front passenger airbag	Deactivated
	Side airbag on the front passenger seat	
	Curtain shield airbag in the front passenger side	Activated
	Front passenger's seat belt pretensioner	

Unoccupied

Indicator/ warning light	AIR BAG ON and AIR BAG OFF indicator lights	Not illuminated
	SRS warning light	Off
	Front passenger's seat belt reminder light	
Devices	Front passenger airbag	Deactivated
	Side airbag on the front passenger seat	
	Curtain shield airbag in the front passenger side	Activated
	Front passenger's seat belt pretensioner	Deactivated

There is a malfunction in the system

Indicator/ warning light	AIR BAG ON and AIR BAG OFF indicator lights	AIR BAG OFF
	SRS warning light	On
	Front passenger's seat belt reminder light	Off
Devices	Front passenger airbag	Deactivated
	Side airbag on the front passenger seat	
	Curtain shield airbag in the front passenger side	Activated
	Front passenger's seat belt pretensioner	

*1:The system judges a person of adult size as an adult. When a smaller adult sits in the front pa ssenger seat, the system may rec−ognize him/her as a child dependi ng on his/her physique and pos−ture.

*2:In the event the front passenger does not wear a seat belt.

*3:When a larger child who has outgrown a child restraint system sits in the front passenger seat, the system may rec ognize him/her as an adult depending on his/her physique or posture.

*4:Never install a rear−facing child restraint system on the front pas−senger seat. A forward−facing child restraint system should only be installed on the front passenger seat when it is unavoidable. (P. 90)

*5:In case the indicator is not illum inated, consult this manual as for installing the child restraint system properly. (P. 9 3)

CAUTION

Front passenger occupant classification system precautions

Observe the following precautions r egarding front passenger occupant clas–sification system.
Failure to do so may cause death or serious injury.

- Wear the seat belt properly.
- Make sure the front passenger's seat belt tab has not been left inserted into the buckle before someone sits in the front passenger seat.
- Make sure the AIR BAG OFF indicator light is not illuminated when using the seat belt extender for the front passenger seat. If the AIR BAG OFF indicator light is illuminated, disconnect the extender tongue from the seat belt buckle, then reconnect the seat belt. Reconnect the seat belt extender after making sure the AIR BAG ON indicator light is illuminated. If you use the seat belt extender while the AIR BAG OFF indicator light is illuminated, the front passenger airbag and side airbag on the front passenger side may not activate correctly, which could cause death or serious injury in the event of collision.
- Do not apply a heavy load to the front passenger seat or equipment.
- Do not put weight on the front passenger seat by putting your hands or feet on the front passenger seat seatback from the rear passenger seat.
- Do not let a rear passenger lift the front passenger seat with their feet or press on the seatback with their legs.
- Do not put objects under the front passenger seat.
- Do not recline the front passenger seatback so far that it touches a rear seat. This may cause the AIR BAG OFF indicator light to be illuminated, which indicates that the passenger's airbags will not deploy in the event of a severe accident. If the seatback touches the rear seat, return the seat–back to a position where it does not touch the rear seat. Keep the front passenger seatback as upright as possible when the vehicle is moving. Reclining the seatback excessively may lessen the effectiveness of the seat belt system.

CAUTION

■ **Front passenger occupant classification system precautions**

- If an adult sits in the front passenger seat, the AIR BAG ON indicator light is illuminated. If the AIR BAG OFF indicator is illuminated, ask the passenger to sit up straight, well back in the seat, feet on the floor, and with the seat belt worn correctly. If the AIR BAG OFF indicator still remain illuminated, either ask the passenger to move to the rear seat, or if that is not possible, move the front passenger seat fully rearward.
- When it is unavoidable to install the forward−facing child restraint system on the front passenger seat, install the child restraint system on the front passenger seat in the proper order. (P. 93)
- Do not modify or remove the front seats.
- Do not kick the front passenger seat or subject it to severe impact. Otherwise, the SRS warning light may come on to indicate a malfunction of the detection system. In this case, contact your Toyota dealer immediately.
- Child restraint systems installed on the rear seat should not contact the front seatbacks.

Child restraint systems

A child restraint system for a small child or baby must itself be properly restrained on the seat with the lap portion of the lap/shoulder belt.

The laws of all 50 states of the U.S.A. and Canada now require the use of child restraint systems.

Points to remember

Studies have shown that installing a child restraint on a rear seat is much safer than installing one to the front passenger seat.

- Choose a child restraint system appropriate to the age and size of the child.
- For installation details, follow the instructions provided with the child restraint system.
  General installation instructions are provided in this manual.
  (P. 93)

Types of child restraints

Child restraint systems are classified into the following 3 types according to the age and size of the child.

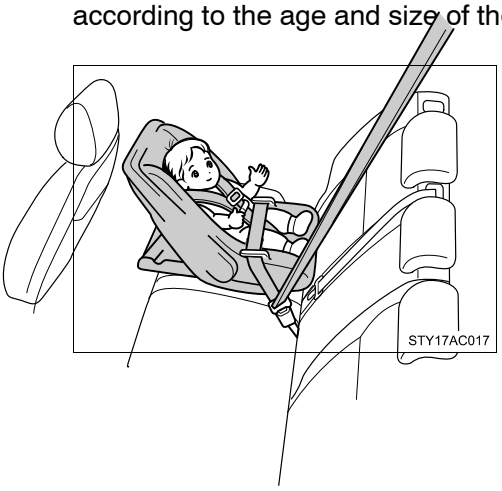

▶ Infant seat

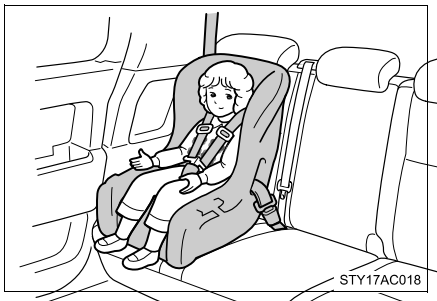

▶Convertible seat

▶Booster seat

■ **When the child restraint system is not in use**

Leave the child restraint system properly secured on the seat. Do not store the restraint loosely on a passenger seat or in the luggage compartment.

■ **Selecting an appropriate child restraint system**

Get an appropriate child restraint system for the child. If a child is too large for a child restraint system, sit the child on a rear seat and use the vehicle's seat belt. (P. 51)

⚠ CAUTION

■ **Child restraint precautions**

● For effective protection in automobile accidents and sudden stops, a child must be properly restrained, using a seat belt or child restraint system depending on the age and size of the child. Holding a child in your arms is not a substitute for a child restraint system. In an accident, the child can be crushed against the windshield, or between you and the vehicle's interior.

CAUTION

Child restraint precautions

- Toyota strongly urges the use of a proper child restraint system that conforms to the size of the child, installed on the rear seat. According to accident statistics, the child is safer when properly restrained in the rear seat than in the front seat.
- Never install a rear−facing child restraint system on the front passenger seat even if AIR BAG OFF indicator light is illuminated. In the event of an accident, the force of the rapid inflation of the front passenger airbag can cause death or serious injury to the child if the rear−facing child restraint system is installed on the front passenger seat.
- A forward−facing child restraint system should allowed to be installed on the front passenger seat only when it is unavoidable. Always move the seat as far back as possible even if AIR BAG OFF indicator light is illuminated, because the front passenger airbag could inflate with considerable speed and force. Otherwise, the child may be killed or seriously injured.
- Do not use the seat belt extender when installing a child restraint system on the front or rear passenger seat. If installing a child restraint system with the seat belt extender connected to the seat belt, the seat belt will not securely hold the child restraint system, which could cause death or serious injury to the child or other passengers in the event of collision.
- Do not allow the child to lean his/her head or any part of his/her body against the door or the area of the sea t, front and rear pillars or roof side rail from which the side airbags or curtain shield airbags deploy even if the child is seated in the child restraint system. It is dangerous if the side airbags and curtain shield airbags inflate, and the impact could cause death or serious injury to the child.
- Make sure you have complied with all installation instructions provided by the child restraint manufacturer and that the system is properly secured. If it is not secured properly, it may cause death or serious injury to the child in the event of a sudden stop or accident.

Installing child restraints

Follow the child restraint system manufacturer's instructions. Firmly secure child restraints to the outside rear seats using a seat belt or a child restraint lower anchor belt. Attach the top strap when installing a child restraint.

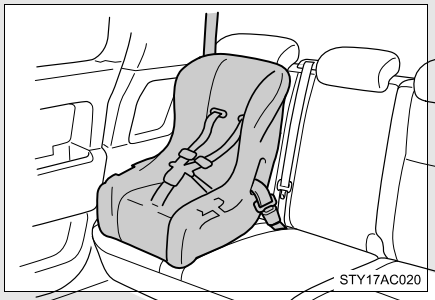

Seat belts equipped with a child restraint locking mechanism (ALR/ELR belts except driver's seat belt) (P. 51)

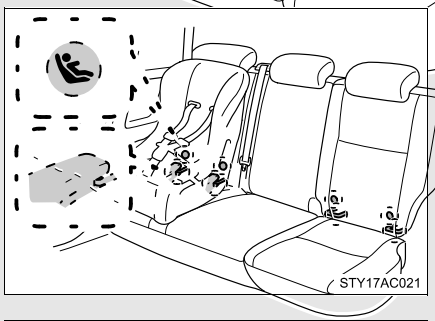

ld restraint lower anchor−
ges

Lower anchorages are provided for the outside rear seats. (Buttons displaying the location of the anchorages are attached to the seats.)

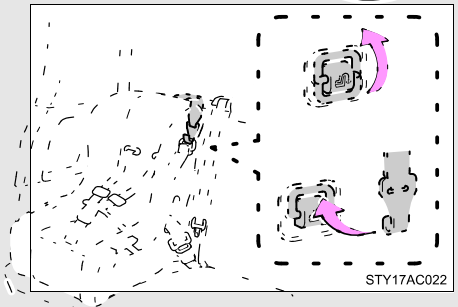

Anchor bracket (for top strap)

Anchor brackets are provided for all rear seats.

Installing child restraints using a seat belt (child restraint lock function belt)

Rear facing child seat Infant seat/convertible seat

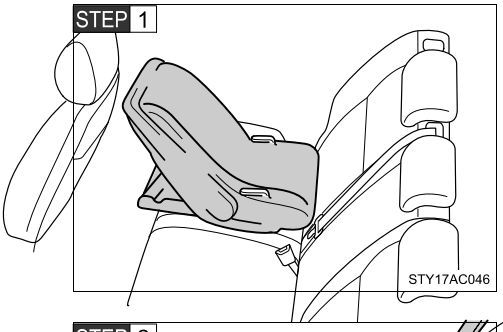

Place the child seat on the rear seat facing the rear of the vehi−cle.

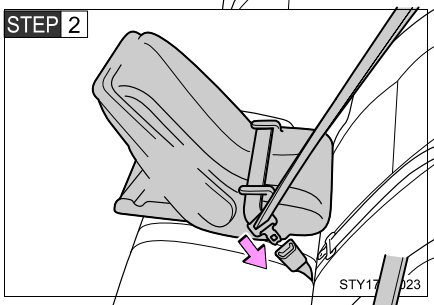

Run the seat belt through the child seat and insert the plate into the buckle. Make sure that the belt is not twisted.

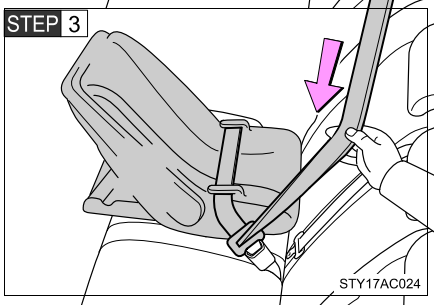

Fully extend the shoulder belt and then allow it to retract tightly in order to activate the ALR lock mode.

Lock mode allows the seat belt to retract only.

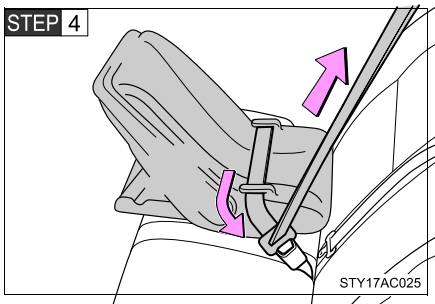

While pushing the child seat down into the rear seat, allow the shoulder belt to retract until the child seat is securely in place.

After the shoulder belt has retracted to a point where there is no slack in the belt, pull the belt to check that it cannot be extended.

■ Forward facing Convertible seat

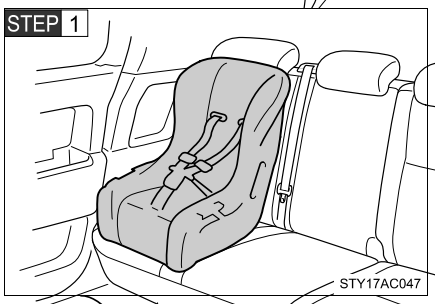

Place the child seat on the seat facing the front of the vehicle.

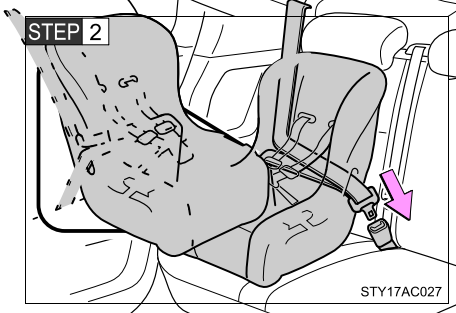

n the seat belt through the child seat and insert the plate into the buckle. Make sure that the belt is not twisted.

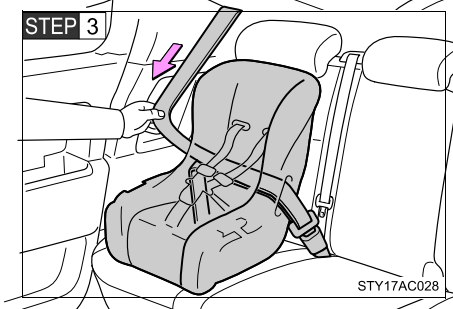

Fully extend the shoulder belt and then allow it to retract slightly into the ALR lock mode.

Lock mode allows the seat belt to retract only.

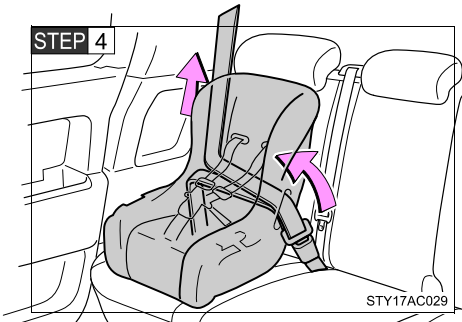

While pushing the child seat into the rear seat, allow the shoulder belt to retract until the child seat is securely in place.

After the shoulder belt has retracted to a point where there is no slack in the belt, pull the belt to check that it cannot be extended

Booster seat

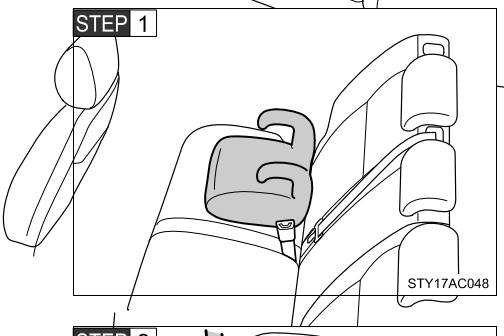

Place the booster seat on the seat facing the front of the vehi–cle.

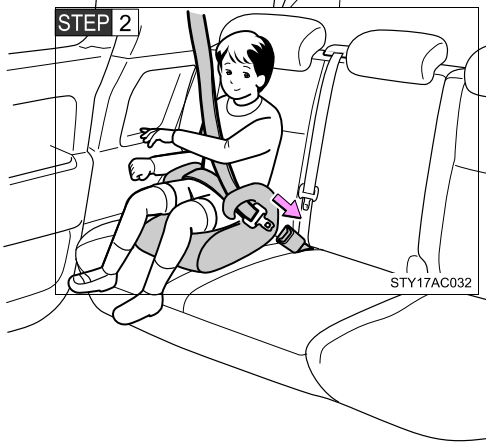

Sit the child in the booster seat. Fit the seat belt to the booster seat according to the manufac–turer's instructions and insert the plate into the buckle. Make sure that the belt is not twisted.

Check that the shoulder belt is correctly positioned over the child's shoulder, and that the lap belt is as low as possible.
(P. 51)

Removing a child restraint installed with a seat belt

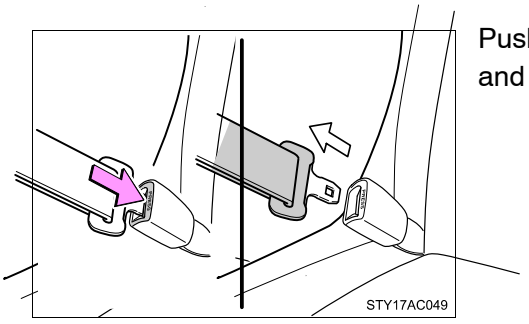

Push the buckle release button and fully retract the seat belt.

Installation with child restraint lower anchorages

▶Type A

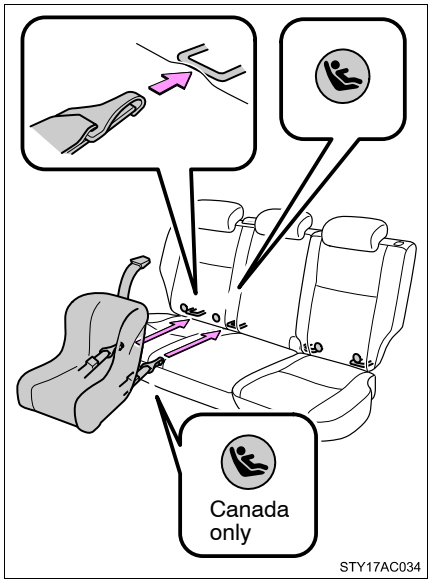

STEP 1 Widen the gap between the seat cushion and seatback slightly.

STEP 2 Latch the hooks of the lower straps onto the anchorages and tighten the lower straps.

If the child restraint has a top strap, the top strap should be latched onto the anchorages.

For owners in Canada:
The symbol on a child restraint system indicates the presence of a lower connector system.

▶Type B

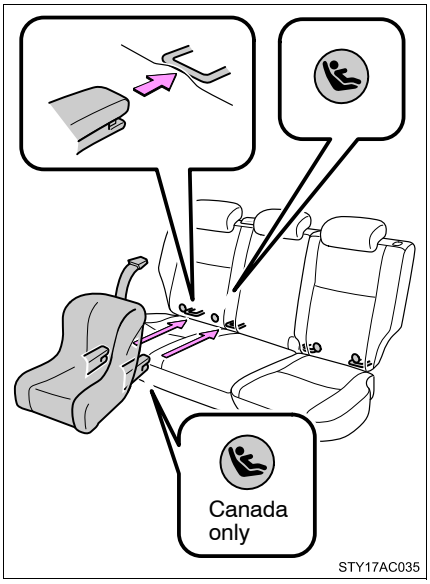

STEP 1 Widen the gap between the seat cushion and seatback slightly.

STEP 2 Latch the buckles onto the anchorages.

If the child restraint has a top strap, the top strap should be latched onto the anchorages.

For owners in Canada:
The symbol on a child restraint system indicates the presence of a lower connector system.

Child restraint systems with a top strap

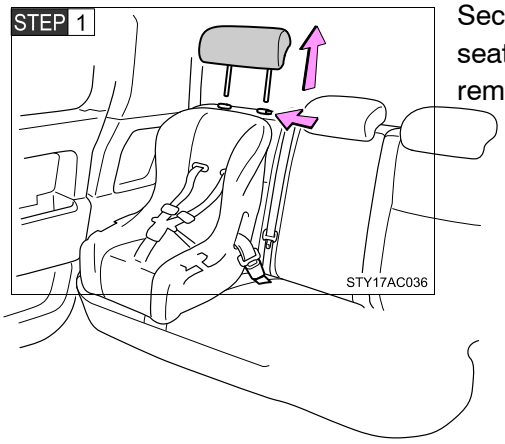

Secure the child restraint using a seat belt or lower anchors, and remove the head restraint.

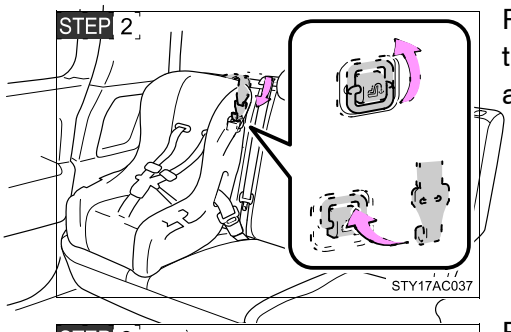

Raise the anchor bracket, latch the hook onto the anchor bracket and tighten the top strap.

Make sure the top strap is securely latched.

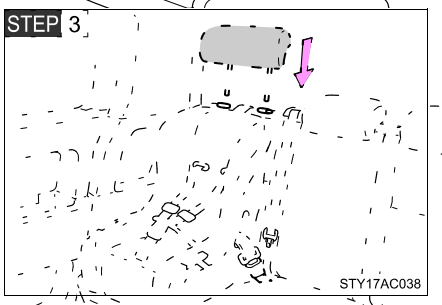

Reinstall the head restraint.

Laws and regulations pertaining to anchorages

Anchorages conform to FMVSS225 or CMVSS210.2.
Child restraint systems conforming to FMVSS213 or CMVSS213 specifications can be used.
This vehicle is designed to conform to the SAE J1819.

When the anchor bracket is not in use

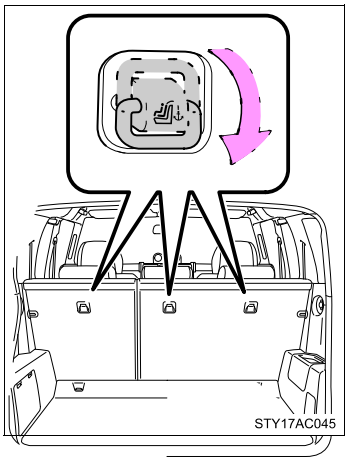

Lower the anchor bracket.

The anchor bracket is only designed to secure the top strap. Do not use the anchor bracket for any other purpose.

CAUTION

When installing a booster seat

Do not fully extend the shoulder belt to prevent the belt from going to ALR lock mode. (P. 53)

- ALR mode causes the belt to tighten only which could cause injury or discomfort to the child.
- Do not allow the child to play with the seat belt or the child could be killed or seriously injured.

CAUTION

When installing a child restraint system

Follow the directions given in the child restraint system installation manual and fix the child restraint system securely in place.
If the child restraint system is not correctly fixed in place, the child may be seriously injured or even killed in the event of sudden braking or an accident.

- If the driver's seat interferes with the child restraint system and prevents it from being attached correctly, attach the child restraint system to the right–hand rear seat.

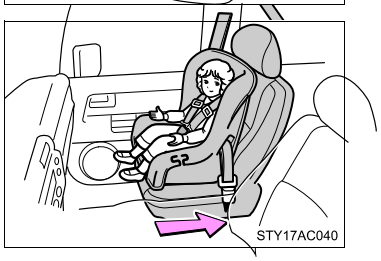

- Only put a forward facing or booster child seat on the front seat when unavoidable. When installing a forward facing or booster child seat on the front passenger seat, move the seat as far back as possible even if AIR BAG OFF indicator light is illuminated. Failing to do so may result in death or serious injury if the airbags deploy (inflate).

- When a booster seat is installed, always ensure that the shoulder belt is positioned across the center of the child's shoulder. The belt should be kept away from the child's neck, but not so that it could fall off the child's shoulder. Failing to do so may result in death or serious injury in the event of an accident or sudden braking.
- Ensure that the belt and tab are securely locked and the seat belt is not twisted.
- Push and pull the child restraint system in different directions to be sure it is secure.
- Follow all installation instructions provided by the child restraint system manufacturer.

CAUTION

Do not use a seat belt extender

If a seat belt extender is used when installing a child restraint system, the seat belt will not securely hold the child restraint system, which could cause death or serious injury to the child or other passengers in the event of a collision.

To correctly attach a child restraint system to the anchorages

When using the lower anchorages, be sure that there are no foreign objects around the anchorages and that the seat belt is not caught behind the child restraint. Make sure the child restraint system is securely attached, or it may cause death or serious injury to the child in the event of a sudden stop or accident.

Driving the vehicle

The following procedures should be observed to ensure safe driving.

Starting the engine (P. 114)

Driving

▶Automatic transmission

STEP 1 With the brake pedal depressed, shift the shift lever to D. (P. 117)

STEP 2 Release the parking brake. (P. 122)

STEP 3 Gradually release the brake pedal and gently depress the accelerator pedal to accelerate the vehicle.

▶Manual transmission

STEP 1 With the clutch pedal fully depressed, shift the shift lever to 1. (P. 119)

STEP 2 Release the parking brake. (P. 122)

STEP 3 Gradually release the clutch pedal. At the same time, gently depress the accelerator pedal to accelerate the vehicle.

Stopping

▶Automatic transmission

STEP 1 With the shift lever in D, depress the brake pedal.

STEP 2 If necessary, set the parking brake.

When the vehicle is stopped for an extended period of time, shift the shift lever to P or N. (P. 11)7

▶Manual transmission

STEP 1 With the clutch pedal fully depressed, depress the brake pedal.

STEP 2 If necessary, set the parking brake.

When the vehicle is stopped for an extended period of time, shift the shift lever to N. (P. 119)

Parking the vehicle

▶Automatic transmission

STEP 1 With the shift lever in D, depress the brake pedal.

STEP 2 Set the parking brake. (P. 122)

STEP 3 Shift the shift lever to P. (P. 117)

When parking on a hill, if necessary, block the wheels.

STEP 4 Turn the engine switch off to stop the engine.

STEP 5 Lock the door, making sure that you have the key on your person.

▶Manual transmission

STEP 1 With the clutch pedal fully depressed, depress the brake pedal.

STEP 2 Set the parking brake. (P. 114)

STEP 3 Shift the shift lever to N. (P. 119)

When parking on a hill, shift the shift lever to 1 or R. If necessary, block the wheels.

STEP 4 Turn the engine switch off to stop the engine.

STEP 5 Lock the door, making sure that you have the key on your person.

Starting on a steep uphill

▶Automatic transmission

STEP 1 With the brake pedal depressed, firmly set the parking brake and shift the shift lever to D.

STEP 2 Gently depress the accelerator pedal.

STEP 3 Release the parking brake.

▶Manual transmission

STEP 1 With the parking brake firmly set and the clutch pedal fully depressed, shift the shift lever to 1.

STEP 2 Lightly depress the accelerator pedal at the same time as gradually releasing the clutch pedal.

STEP 3 Release the parking brake.

Driving in the rain

- Drive carefully when it is raining, because visibility will be reduced, the windows may become fogged−up, and the road will be slippery.
- Drive carefully when it starts to rain, because the road surface will be especially slippery.
- Refrain from high speeds when driving on an expressway in the rain, because there may be a layer of water between the tires and the road surface, preventing the steering and brakes from operating properly.

Breaking in your new Toyota

To extend the life of the vehicle, the following precautions are recommended to observe:

- For the first 200 miles (300 km):
  Avoid sudden stops.
- For the first 500 miles (800 km):
  Do not tow a trailer.
- For the first 1000 miles (1600 km):
  - Do not drive at extremely high speeds.
  - Avoid sudden acceleration.
  - Do not drive continuously in the low gears.
  - Do not drive at a constant speed for extended periods.

Drum−in disc type parking brake system

Your vehicle has a drum−in−disc type parking brake system. This type of brake system needs bedding−down of the brake shoes periodically or whenever the parking brake shoes and/or drum are replaced. Have your Toyota dealer perform the bedding down.

Operating your vehicle in a foreign country

Comply with the relevant vehicle registration laws and confirm the availability of the correct fuel. (P. 364)

Normal characteristics after turning off the engine

Approximately five hours after the engine is turned off, you may hear sound coming from under the vehicle for several minutes. This is the sound of a fuel evaporation leakage check and, it does not indicate a malfunction.

CAUTION

When starting the vehicle

Vehicles with an automatic transmission, always keep your foot on the brake pedal while stopped with the engine running. This prevents the vehicle from creeping.

When driving the vehicle

- Do not drive if you are unfamiliar with the location of the brake and accelerator pedals to avoid depressing the wrong pedal.
  Accidentally depressing the accelerator pedal instead of the brake pedal will result in sudden acceleration that may lead to an accident that could result in death or serious injury.
- Do not drive the vehicle over or stop the vehicle near flammable materials.
  The exhaust system and exhaust gases can be extremely hot. This may cause a fire if there is any flammable material nearby.
- Vehicles with an automatic transmission, do not let the vehicle roll backwards while the shift lever is in a driving position, or roll forward while the shift lever is in R.
  Doing so may cause the engine to stall or lead to poor brake and steering performance, resulting in an accident or damage to the vehicle.
- If the smell of exhaust is noticed inside the vehicle, open the windows and check that the back door and glass hatch are closed. Large amounts of exhaust in the vehicle can cause driver drowsiness and an accident, resulting in death or a serious health hazard. Have the vehicle inspected by your Toyota dealer immediately.
- Do not under any circumstances shift the shift lever to P, R or N (automatic transmission) or R (manual transmission) while the vehicle is moving.
  Doing so can cause significant damage to the transmission system and may result in a loss of vehicle control.

CAUTION

When driving the vehicle

- Do not shift the shift lever to N while the vehicle is moving.
  Doing so may cause the engine brake to not operate properly and lead to an accident.
- Do not turn the engine off while driving.
  The power steering and brake booster systems will not operate properly if the engine is not running.
- Use engine braking (downshift) to maintain a safe speed when driving down a steep hill.
  Using the brakes continuously may cause the brakes to overheat and lose effectiveness. (P. 118, 120)
- When stopped on an inclined surface, use the brake pedal and parking brake to prevent the vehicle from rolling backward or forward and causing an accident.
- Do not adjust the position of the steering wheel, the seat, or the inside or outside rear view mirrors while driving.
  Doing so may result in a loss of vehicle control that can cause accidents that may result in death or serious injury.
- Always check that all passengers' arms, heads or other parts of their bodies are not outside the vehicle, as this may result in death or serious injury.
- Do not drive in excess of the speed limit. Even if the legal speed limit permits it, do not drive over 85 mph (140 km/h) unless your vehicle has high−speed capability tires. Driving over 85 mph (140 km/h) may result in tire failure, loss of control and possible injury. Be sure to consult a tire dealer to determine whether the tires on your vehicle are high−speed capability tires or not before driving at such speeds.

CAUTION

■ **When driving on slippery road surfaces**

- Sudden braking, acceleration and steering may cause tire slippage and reduce your ability to control the vehicle, resulting in an accident.
- Sudden changes in engine speed, such as engine braking caused by up−shifting or down−shifting, may cause the vehicle to skid, resulting in an accident.
- After driving through a puddle, lightly depress the brake pedal to make sure that the brakes are functioning properly. Wet brake pads may prevent the brakes from functioning properly. If the brakes on only one side are wet and not functioning properly, steering control may be affected, resulting in an accident.

■ **When shifting the shift lever**

- Vehicles with an automatic transmission, be careful not to shift the shift lever with the accelerator pedal depressed.
  This may lead to unexpected rapid acceleration of the vehicle that may cause an accident and result in death or serious injury.

■ **When the vehicle is stopped**

- Do not race the engine.
  If the vehicle is in any gear other than P (automatic transmission only) or N, the vehicle may accelerate suddenly and unexpectedly, and may cause an accident.
- Do not leave the vehicle with the engine running for a long time.
  If such a situation cannot be avoided, park the vehicle in an open space and check that exhaust fumes do not enter the vehicle interior.
- Vehicles with an automatic transmission, always keep a foot on the brake pedal while the engine is running to prevent an accident caused by the vehicle moving.

CAUTION

When the vehicle is parked

- Do not leave glasses, cigarette lighters, spray cans, or soft drink cans in the vehicle when it is in the sun.
  Doing so may result in the following.
  - Gas may leak from a cigarette lighter or spray can, and may lead to a fire.
  - The temperature inside the vehicle may cause the plastic lenses and plastic material of eye glasses to deform or crack.
  - Soft drink cans may fracture, causing the contents to spray over the interior of the vehicle, and may also cause a short circuit in the vehicle's electrical components.
- Always apply the parking brake, shift the shift lever to P (automatic transmission only), stop the engine and lock the vehicle.
  Do not leave the vehicle unattended while the engine is running.
- Do not touch the exhaust pipe while the engine is running or immediately after turning the engine off.
  Doing so may cause burns.
- Do not leave the engine running in an area with snow build−up, or where it is snowing. If snowbanks build up around the vehicle while the engine is running, exhaust gases may collect and enter the vehicle. This may lead to death or a serious health hazard.

Exhaust gases

Exhaust gases include harmful carbon monoxide (CO) that is colorless and odorless. Inhaling exhaust gases may lead to death or a serious health hazard.

- If the vehicle is in a poorly ventilated area, stop the engine. In a closed area, such as a garage, exhaust gases may collect and enter the vehicle. This may lead to death or a serious health hazard.
- The exhaust should be checked occasionally. If there is a hole or crack caused by corrosion, damage to a joint or abnormal exhaust noise, be sure to have the vehicle inspected and repaired by your Toyota dealer. Failure to do so may allow exhaust gases to enter the vehicle, resulting in death or a serious health hazard.

CAUTION

■ **When taking a nap in the vehicle**

Always turn the engine off. Otherwise, you may accidentally move the shift lever or depress the accelerator pedal, which could cause an accident or fire due to engine overheating. Additionally, if the vehicle is parked in a poorly ventilated area, exhaust gases may collect and enter the vehicle, leading to death or a serious health hazard.

■ **When braking the vehicle**

- When the brakes are wet, drive more cautiously.
  Braking distance increases when the brakes are wet, and may cause one side of the vehicle to brake differently than the other side. Also the parking brake may not securely hold the vehicle.
- If the power brake assist function does not operate, do not follow other vehicles closely and avoid downhills or sharp turns that require braking. In this case, braking is still possible, but it will require more force on the pedal than usual. Braking distance may also increase.
- Do not pump the brake pedal if the engine stalls.
  Each push on the brake pedal uses up the reserve for the power−assisted brakes.
- The brake system consists of 2 individual hydraulic systems: If one of the systems fails, the other will still operate. In this case, the brake pedal should be depressed more firmly than usual and braking distance becomes longer.
  Do not drive your vehicle with only a single brake system. Have your brakes fixed immediately.

NOTICE

■ **When driving the vehicle**

▶Vehicles with a manual transmission

● Do not rest your foot on the clutch pedal while driving.
Doing so may cause clutch trouble.

● Do not use any gears other than the first gear when starting off and moving forward.
Doing so may damage the clutch.

● Do not use the clutch to hold the vehicle when stopping on an uphill grade.
Doing so may damage the clutch.

▶Vehicles with an automatic transmission

● Do not use the accelerator pedal or depress accelerator and brake pedals together to hold the vehicle on a hill.

■ **When parking the vehicle**

Vehicles with an automatic transmission: Always put the shift lever in P.
Failure to do so may cause the vehicle to move or the vehicle may accelerate suddenly if the accelerator pedal is accidentally depressed.

■ **Avoiding damage to vehicle parts**

● Do not turn the steering wheel fully in either direction and hold it there for a long time.
Doing so may damage the power steering pump.

● When driving over bumps in the road, drive as slowly as possible to avoid damaging the wheels, underside of the vehicle, etc.

■ **If you hear a squealing or scraping noise while driving (brake pad wear limit indicators)**

Have the brake pads checked and replaced by your Toyota dealer as soon as possible.
The rotor damage can result if the pads are not replaced when needed.

It is dangerous to drive the vehicle when the wear limits of the brake pads and/or that of the brake discs are exceeded.

NOTICE

■ **If you get a flat tire while driving**

A flat or damaged tire may cause the following situations. Hold the steering wheel firmly and gradually press the brake pedal to slow down the vehicle.

- It may be difficult to control your vehicle.
- The vehicle will make abnormal sounds.
- The vehicle will behave abnormally.

Replace a flat tire with a new one. (P. 342)

■ **When encountering flooded roads**

Do not drive on a road that has flooded after heavy rain etc. Doing so may cause the following serious damage to the vehicle.

- Engine stalling
- Short in electrical components
- Engine damage caused by water immersion

In the event that you drive on a flooded road and the vehicle is flooded, be sure to have your Toyota dealer check the following.

- Brake function
- Changes in quantity and quality of oil and fluid used for the engine, transmission, transfer (4WD vehicles), differentials, etc.
- Lubricant condition for the propeller shaft, bearings and suspension joints (where possible) and the function of all joints, bearings, etc.

Engine (ignition) switch

Engine switch

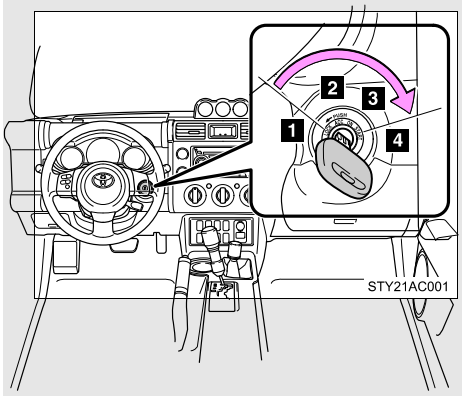

1 LOCK

The steering wheel is locked and the key can be removed.

2 ACC

Some electrical components such as the audio system can be used.

3 ON

All electrical components can be used.

4 START

For starting the engine.

Starting the engine

▶Automatic transmission

STEP 1 Check that the parking brake is set.

STEP 2 Check that the shift lever is set in P.

STEP 3 Sit in the driver's seat and firmly depress the brake pedal.

STEP 4 Turn the engine switch to the START position and start the engine.

▶Manual transmission

STEP 1 Check that the parking brake is set.

STEP 2 Check that the shift lever is set in N.

STEP 3 Firmly depress the brake pedal and clutch pedal.

STEP 4 Turn the engine switch to the START position and start the engine.

■ **Turning the key from ACC to LOCK**

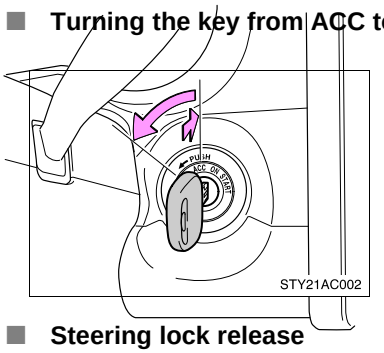

STEP 1 Shift the shift lever to P (automatic transmission) or N (manual transmission). (P. 117/119)

STEP 2 Push in the key and turn to the LOCK position.

■ **Steering lock release**

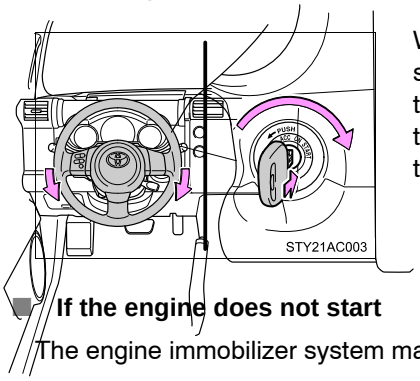

When starting the engine, the engine switch may seem stuck in the LOCK position. To free it, turn the key while turning the steering wheel slightly in either direction.

■ **If the engine does not start**

The engine immobilizer system may not have been deactivated. (P. 68)

■ **Key reminder function**

A buzzer sounds if the driver's door is opened, while the engine switch is in the ACC or LOCK position to remind you to remove the key.

⚠ CAUTION

■ **When starting the engine**

Always start the engine while sitting in the driver's seat. Do not depress the accelerator while starting the engine under any circumstances.
Doing so may cause an accident resulting in death or serious injury.

CAUTION

Caution while driving

Do not turn the engine switch to the LOCK position.
If in an emergency, you must turn the engine off while the vehicle is moving, turn the engine switch only to the ACC position.

NOTICE

To prevent battery discharge

Do not leave the engine switch in the ACC or ON position for long periods if the engine is not running.

When starting the engine

- Do not crank for more than 30 seconds at a time. This may overheat the starter and wiring systems.
- Do not race a cold engine.
- If the engine becomes difficult to start or stalls frequently, have the engine checked immediately.

Select a shift position appropriate for the driving conditions.

Shifting the shift lever

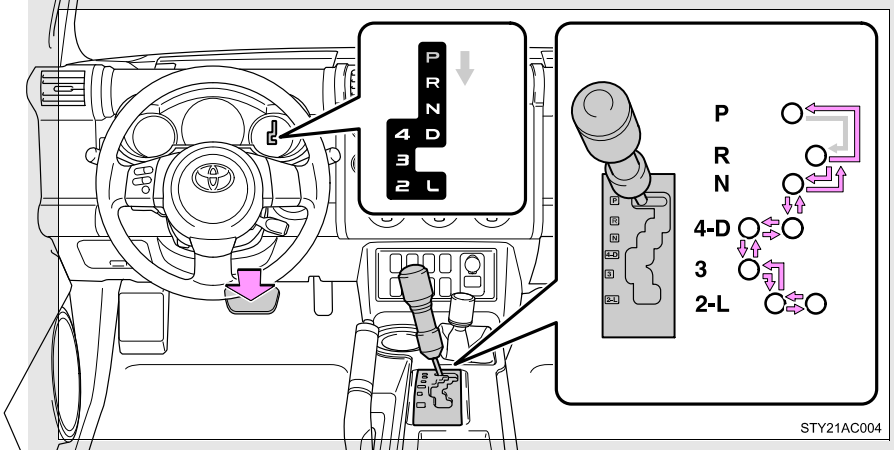

While the engine switch is on, depress the brake pedal and move the shift lever.

Shift position uses

Shift position	Function
P	Parking the vehicle or starting the engine
R	Reversing
N	Neutral
D	Normal driving*
4	Position for engine braking
3, 2	Position for more powerful engine braking
L	Position for maximum engine braking

*: To improve fuel consumption and reduce noises, set the shift lever in D for normal driving.

■ **Downshifting restrictions**

The shift lever cannot be downshifted if the following speeds are exceeded.

▶2WD models

Downshifting	Maximum speed mph (km/h)
4 3	86 (140)
3 2	59 (95)
2 L	25 (41)

▶4WD models

Downshifting	Transfer position	Maximum speed mph (km/h)
4 3	H2 and H4	86 (140)
	L4	33 (54)
3 2	H2 and H4	59 (95)
	L4	22 (37)
2 L	H2 and H4	25 (41)
	L4	9 (15)

■ **When driving with the cruise control system (if equipped)**

The engine brake will not operate when downshifting from D to 4.(P. 136)

■ **If the shift lever cannot be shifted from P (P. 351)**

■ **AI−SHIFT**

The AI−SHIFT automatically shifts the gear to the optimal position according to the driver performance and driving conditions.
The AI−SHIFT automatically operates when the shift lever is in D.

Manual Transmission (if equipped)

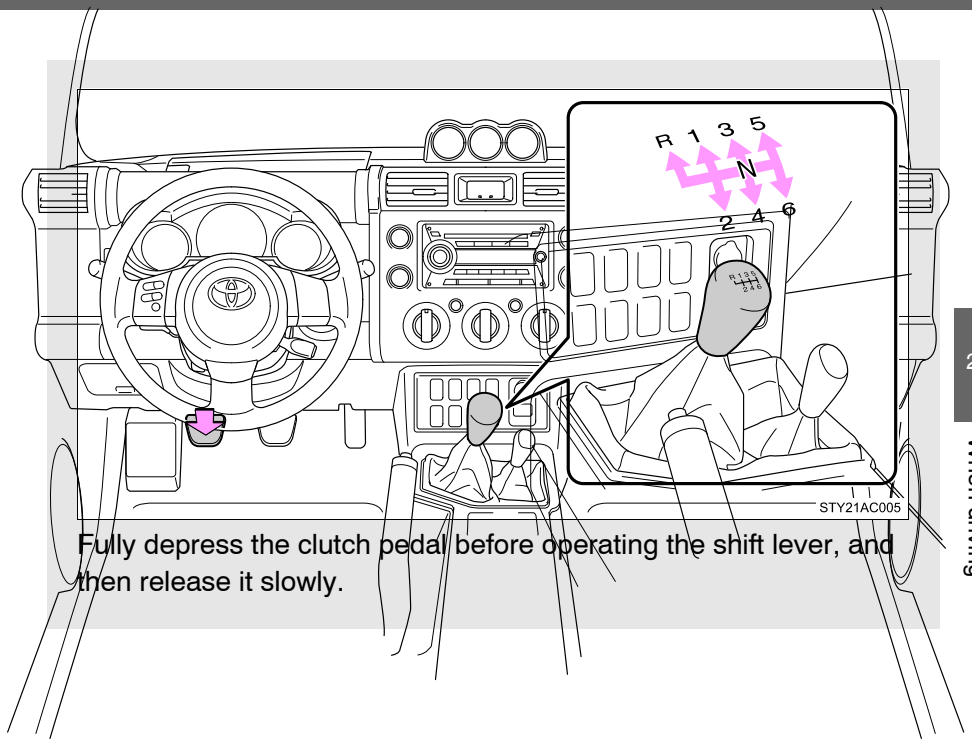

Fully depress the clutch pedal before operating the shift lever, and then release it slowly.

Maximum allowable speed

Observe the following maximum allowable speeds in each gear when maximum acceleration is necessary.

Shift position	Transfer position	Maximum speed mph (km/h)
1	H or HL	30 (48)
	LL	11 (18)
2	H or HL	58 (93)
	LL	22 (35)
3	H or HL	86 (138)
	LL	33 (53)
4	H or HL	107 (172)
	LL	41 (66)
5	H or HL	109 (175)
	LL	50 (80)

Reverse warning buzzer

When shifting into R, a buzzer will sound to inform the driver that the shift lever is in R.

Turn signal lever

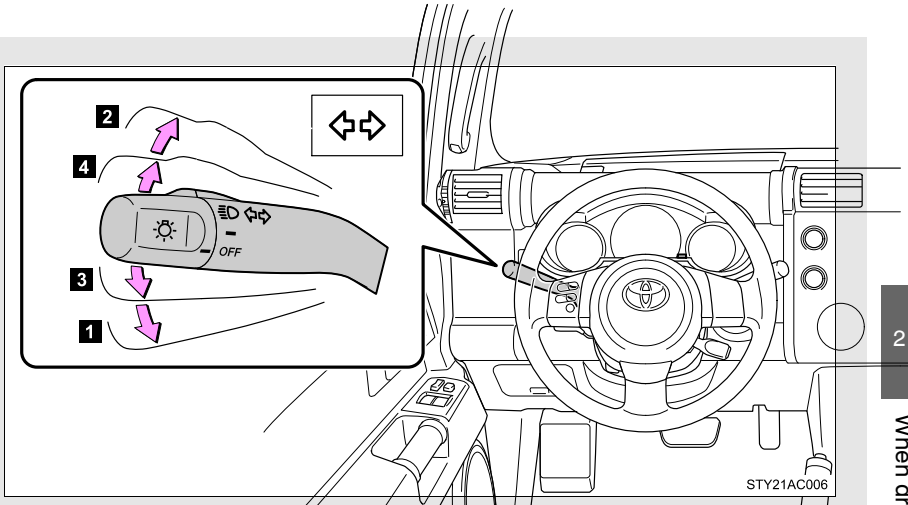

1 Left turn

2 Right turn

3 Move and hold the lever partway to signal a lane change.

The left hand signal will flash until you release the lever.

4 Move and hold the lever partway to signal a lane change.

The right hand signal will flash until you release the lever.

■ **Turn signals can be operated when**

The engine switch is in the ON position.

■ **If the indicators flash faster than usual**

Check that a light bulb in the front or rear turn signal lights has not burned out.

Set the parking brake

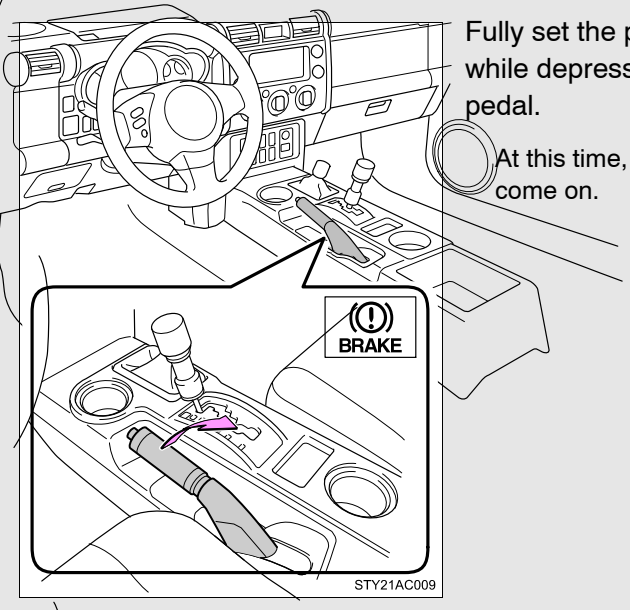

Fully set the parking brake while depressing the brake pedal.

At this time, the indicator will come on.

Release the parking brake

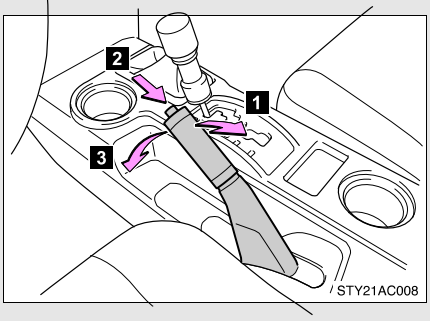

1 Slightly raise the lever
2 Press the button
3 Lower it completely

NOTICE

Before driving

Fully release the parking brake.
Driving the vehicle with the parking brake set will lead to brake components overheating, which may affect braking performance and increase brake wear.

Gauges and meters

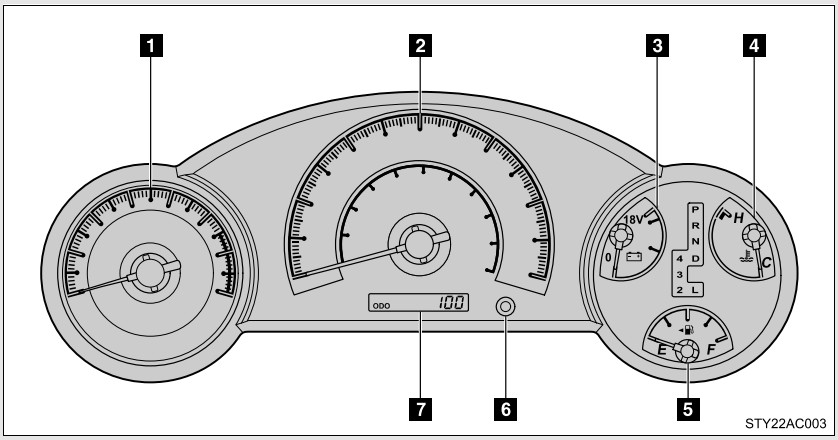

The following gauges, meters and displays illuminate when the engine switch is in the ON position.

1 Tachometer

Displays the engine speed in revolutions per minute.

2 Speedometer

Displays the vehicle speed.

3 Voltmeter

Displays the charge state.

4 Engine coolant temperature gauge

Displays the engine coolant temperature.

5 Fuel gauge

Displays the quantity of fuel remaining in the tank.

6 Odometer/trip meter switching and trip meter resetting button

Switches between odometer and trip meter displays. Pushing and holding the button will reset the trip meter when the trip meter is being displayed.

7 Odometer/trip meter

Odometer:
Displays the total distance the vehicle has been driven.

Trip meter:
Displays the distance the vehicle has been driven since the meter was last reset. Trip meters A and B can be used to record and display different distances independently.

Odometer and trip meter display button

Pressing this button switches between odometer and trip meter displays.

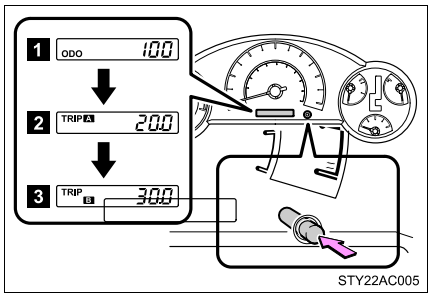

1 Odometer

2 Trip meter A*

3 Trip meter B*

*:Pushing and holding the button will reset the trip meter.

Instrument panel light control

The brightness of the instrument panel lights can be adjusted.

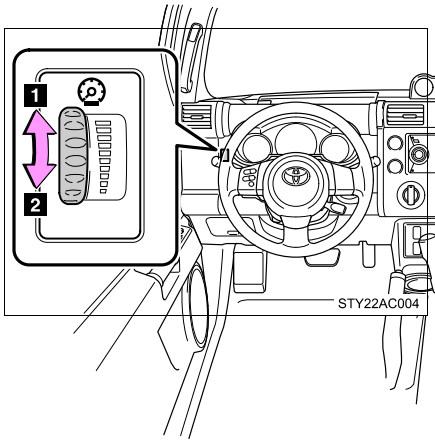

1 Brighter

2 Darker

With the dial turned fully up, the intensity of the instrument panel lights will not be reduced even when the tail lights/headlights are turned on.

NOTICE

■ **To prevent damage to the engine and its components**

- Do not let the indicator needle of the tachometer enter the red zone, which indicates the maximum engine speed.
- The engine may be overheating if the temperature gauge is in the red zone (H). In this case, immediately stop the vehicle in a safe place, and check the engine after it has cooled completely. (P. 356)

Indicators and warning lights

The indicator and warning lights on the instrument cluster and center panel inform the driver of the status of the vehicle's various systems.

▶Instrument cluster

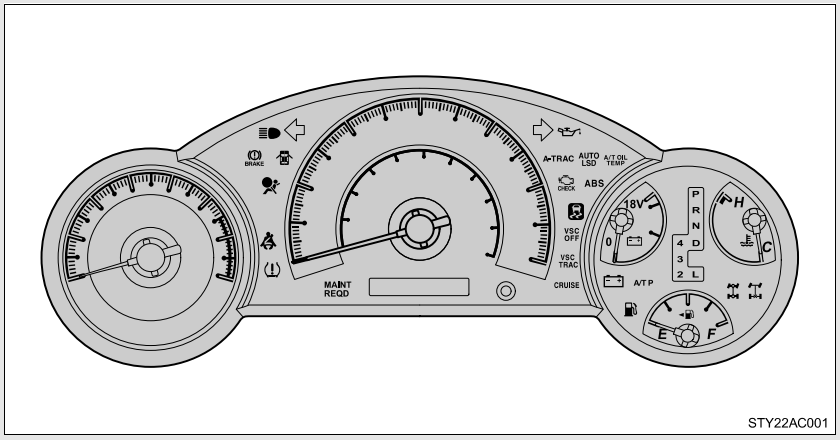

▶Center panel

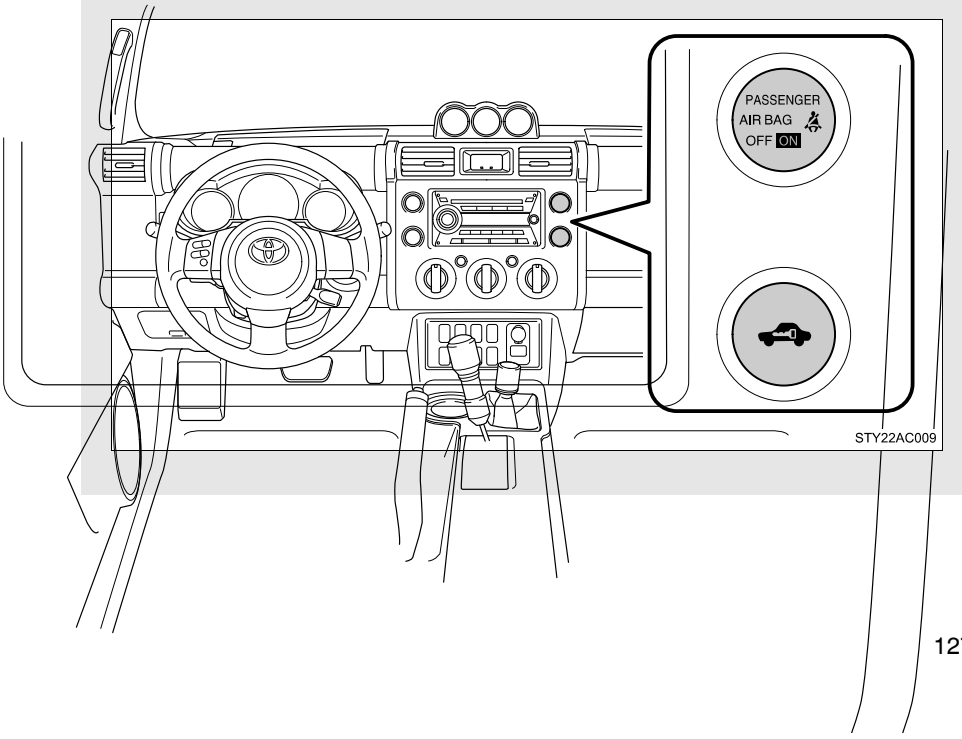

Indicators

The indicators inform the driver of the operating state of the vehicle's various systems.

Turn signal indicator
(P. 121)

Headlight high beam indicator (P. 131)

Security indicator
(P. 68)

P R N D 4 3 2 L

(Automatic transmission vehicles)

Shift position and shift range indicators
(P. 117)

CRUISE

(if equipped)

Cruise control indicator
(P. 136)

*

Slip indicator
(P. 148, 150, 156)

*

VSC OFF

VSC OFF indicator
(P. 157)

A-TRAC

(if equipped)

Active traction control system indicator (P. 148)

*

AUTO LSD

(if equipped)

AUTO LSD indicator
(P. 150)

(if equipped)

Four–wheel drive indicator(P. 146)

(if equipped)

Center differential lock indicator (P. 144)

(if equipped)

Rear differential lock indicator (P. 152)

*

AIR BAG ON

AIR BAG ON indicator
(P. 85)

*

AIR BAG OFF

AIR BAG OFF indicator
(P. 85)

Warning lights

Warning lights inform the driver of malfunctions in any of the vehicle's systems. (P. 331)

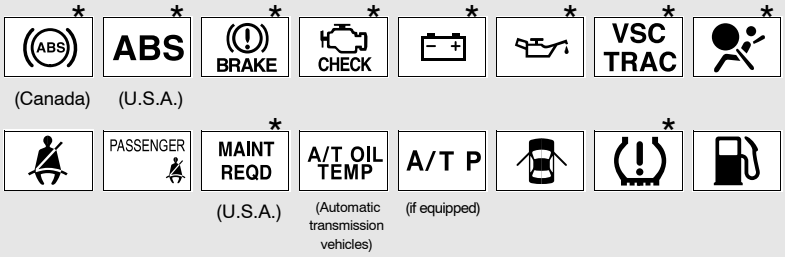

*: These lights turn on when the engine switch is turned to the ON position to indicate that a system check is being performed. They will turn off after the engine is started, or after a few seconds. There may be a malfunction in a system if a light does not come on, or if the lights do not turn off. Have the vehicle inspected by your Toyota dealer.

CAUTION

If a safety system warning light does not come on

Should a safety system light such as ABS and the SRS airbag warning light not come on when you start the engine, this could mean that these systems are not available to help protect you in an accident, which could result in death or serious injury. Have the vehicle inspected by your Toyota dealer immediately if this occurs.

Accessory meter (if equipped)

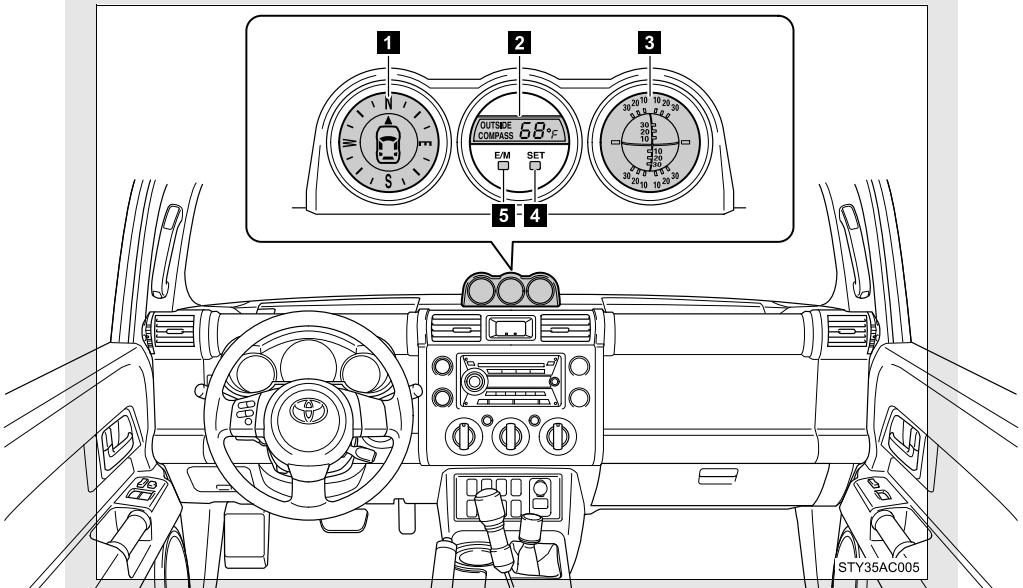

1 Compass

Displays the direction that the vehicle is heading. (P. 252)

2 Outside temperature

Displays the outside air temperature. (P. 238)

3 Clinometer

Displays the longitudinal and lateral inclination of the vehicle.

4 SET button

This button is used to calibrate the compass. (P. 253)

5 E/M button

Outside temperature mode:
Switch between English/U.S. Customary System and metric units of the outside air temperature display by pressing this button quickly.
(P. 253)

Compass mode:
Select the zone number by pressing this button. (P. 252)

Headlight switch

The headlights can be operated manually.

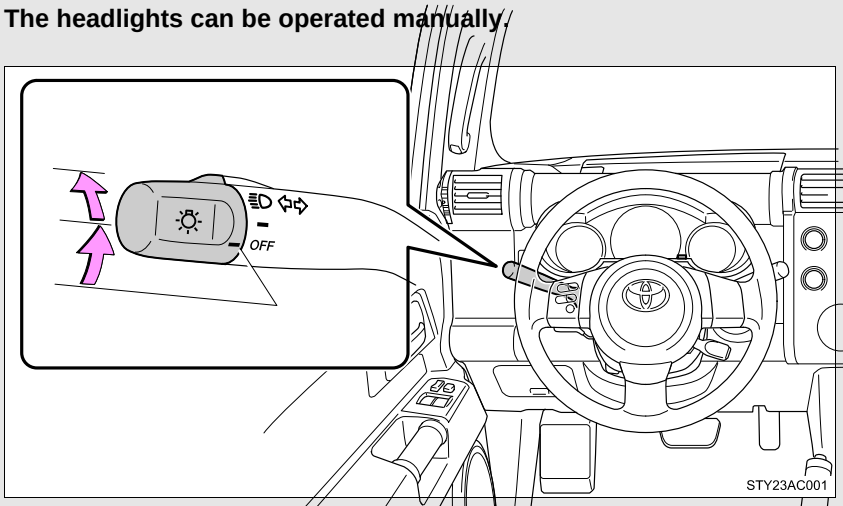

The side marker, parking, tail, license plate, outside rear view mirror illumination (if equipped) and instrument panel lights turn on.

The headlights and all lights listed above turn on.

Turning on the high beam headlights

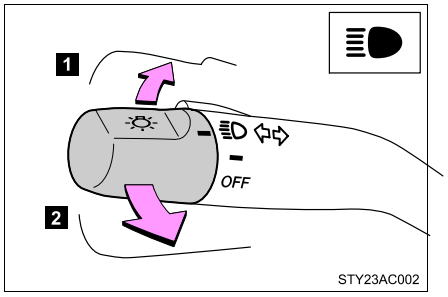

1 With the headlights on, push the lever forward to turn on the high beams.

Pull the lever back to the center position to turn the high beams off.

2 Pull the lever toward you to turn on the high beams.

Release the lever to turn them off. You can flash the high beams with the headlights on or off.

Daytime running light system (if equipped)

To make your vehicle more visible to other drivers, the headlights turn on automatically (at a reduced intensity) whenever the engine is started and the parking brake is released. Daytime running lights are not designed for use at night.

Automatic light off system

- When the headlights come on: The headlights and tail lights turn off 30 seconds after all doors and glass hatch are closed with the engine switch turned to the ACC or LOCK position. (The lights turn off immediately if the LOCK button on the wireless remote control is pressed twice after all doors are locked.)
- When only the tail lights come on: The tail lights turn off automatically with the engine switch turned to the ACC or LOCK position and the driver's door is opened.

If the driver's door is kept open, the lights automatically turn off after 30 minutes.

To turn the lights on again, turn the engine switch to the ON position, or turn the headlight switch off once and then back to the ▬ or position.

Customization that can be configured at Toyota dealer

Settings (automatic light off system) can be changed. (Customizable features P. 386)

NOTICE

To prevent battery discharge

Do not leave the lights on longer than necessary when the engine is not running.

Windshield wipers and washer

Wiper intervals can be adjusted fo r intermittent operation (when INT is selected.)

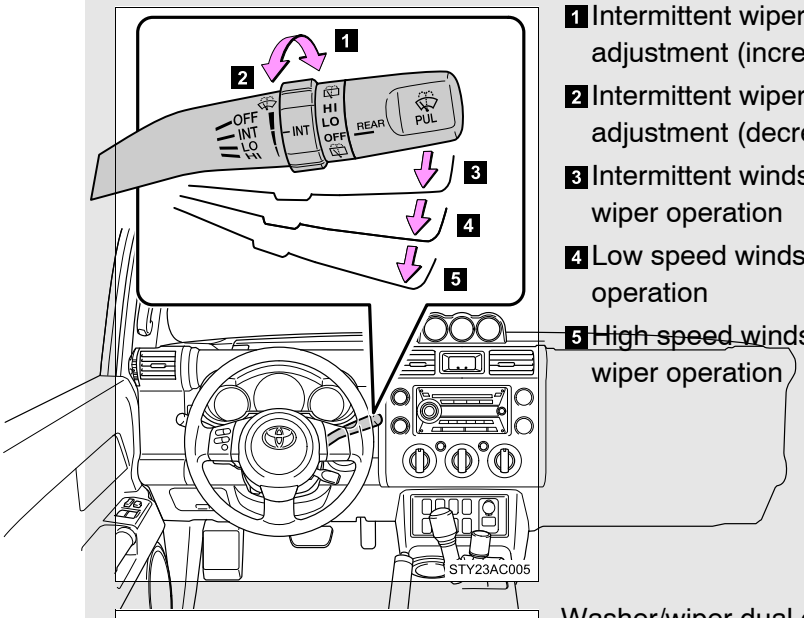

1 Intermittent wiper interval adjustment (increase)

2 Intermittent wiper interval adjustment (decrease)

3 Intermittent windshield wiper operation

4 Low speed windshield wiper operation

5 High speed windshield wiper operation

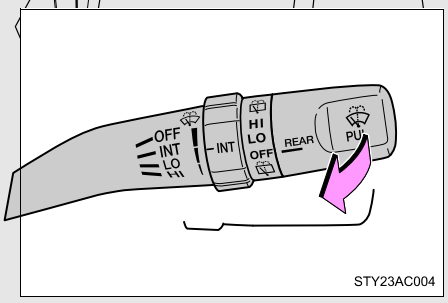

Washer/wiper dual operation

Wipers will automatically operate a couple of times after the washer squirts.

The windshield wiper and washer can be operated when

The engine switch must be in the ON position.

If no windshield washer fluid sprays

Check that the washer nozzles are not blocked and if there is washer fluid in the windshield washer fluid reservoir.

NOTICE

When the windshield is dry

Do not use the wipers, as they may damage the windshield.

When there is no washer fluid spray from the nozzle

Damage to the washer fluid pump may be caused if the lever is pulled toward you and held continually.

When a nozzle becomes block

Do not try to clear it with a pin or other object. The nozzle will be damaged.

Rear window wiper and washer (if equipped)

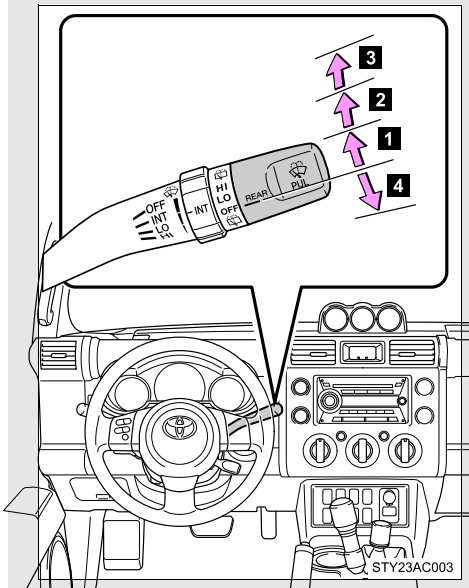

1 Intermittent window wiper operation.

The wiper operates 3 times at normal speed and then moves to intermittent mode.

2 Normal window wiper operation

3 Washer/wiper dual operation

4 Washer/wiper dual operation

The rear window wiper operates while the washer squirts.

■ **The rear window wiper and washer can be operated when**

- The engine switch must be in the ON position.
- The glass hatch is closed.

⚠ NOTICE

■ **When the rear window is dry**

Do not use the wipers, as they may damage the rear window.

Cruise control (if equipped)

Use cruise control to maintain a set speed without using the accelerator.

Set the vehicle speed

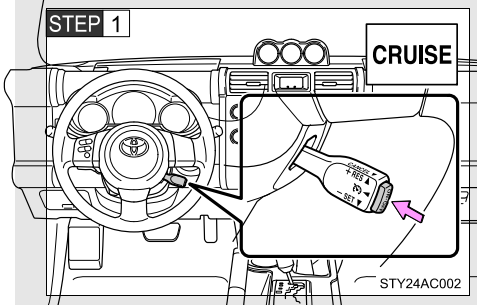

Press the ON−OFF button to turn the cruise control on.

At this time, the cruise control indicator will come on.

Press the button once more to deactivate the cruise control.

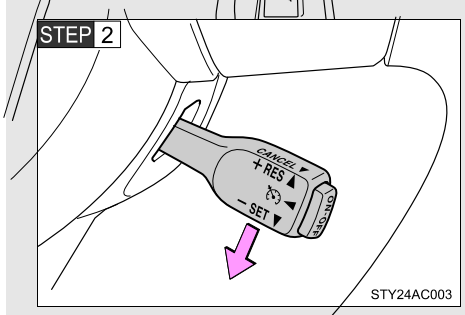

Accelerate or decelerate to the desired speed and push the lever down to set the cruise control speed.

Adjusting the speed setting

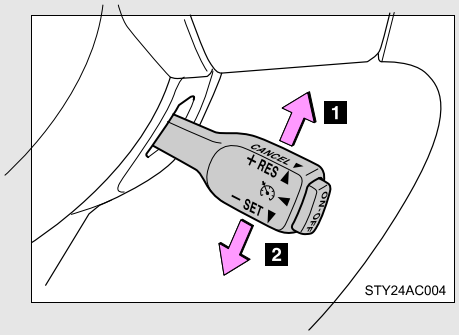

1 Increase speed

2 Decrease speed

Hold the lever until the desired speed setting is obtained.

Fine adjustment of the set speed (approximately 1.0 mph [1.6 km/h]) can be made by lightly pushing the lever up or down and releasing it.

Canceling and resuming regular acceleration

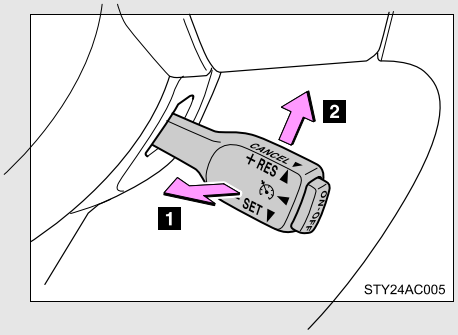

1 Cancel

Pull the lever towards you to cancel cruise control.

The speed setting is also canceled when the brakes are applied or the clutch depressed (manual transmission).

2 Resume

To resume cruise control and return to the set speed, push the lever up.

Cruise control can be set when

- The shift lever is in D or 4 (vehicles with an automatic transmission).
- Vehicle speed is between approximately 25 mph (40 km/h) and 125 mph (200 km/h).

Accelerating

The vehicle can be accelerated normally.

Automatic cruise control cancelation

The set speed is automatically cancelled in any of the following situations.

- Actual vehicle speed falls more than 10 mph (16 km/h) below the preset vehicle speed.
  At this time, the memorized set speed is not retained.
- Actual vehicle speed is below 25 mph (40 km/h).
- VSC is activated.

If the cruise control indicator light flashes

Press the ON−OFF button to turn the cruise control off, and then reactivate the system.
If the cruise control speed cannot be set or if the cruise control cancels immediately after being activated, there may be a malfunction in the cruise control system. Have the vehicle inspected by your Toyota dealer.

CAUTION

To avoid operating the cruise control by mistake

Keep the ON−OFF button off when not in use.

Situations unsuitable for cruise control

Do not use cruise control in any of the following situations.
Doing so may result in control of the vehicle being lost and could cause serious or fatal accident.

- In heavy traffic
- On roads with sharp bends
- On winding roads
- On slippery roads, such as those covered with rain, ice or snow
- On steep hills

While driving with the cruise control on

Vehicles with a manual transmission, do not shift to N without depressing the clutch pedal, as this may cause engine racing or overrevving.

The distance to obstacles measured by the sensors is communi−cated via the buzzer when parallel parking or maneuvering into a garage. Always check the surrounding area when using this system.

This system works when the engine switch is in the ON position and the shift lever is in R.

Back sensors

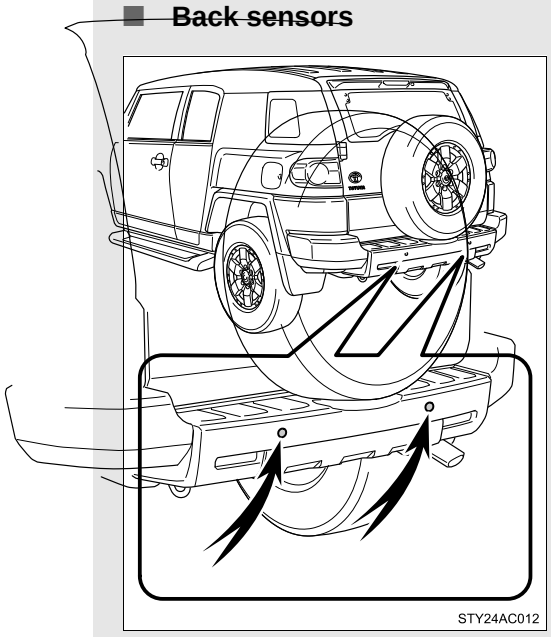

These sensors detect obsta−cles behind the vehicle.

Intuitive parking assist switch

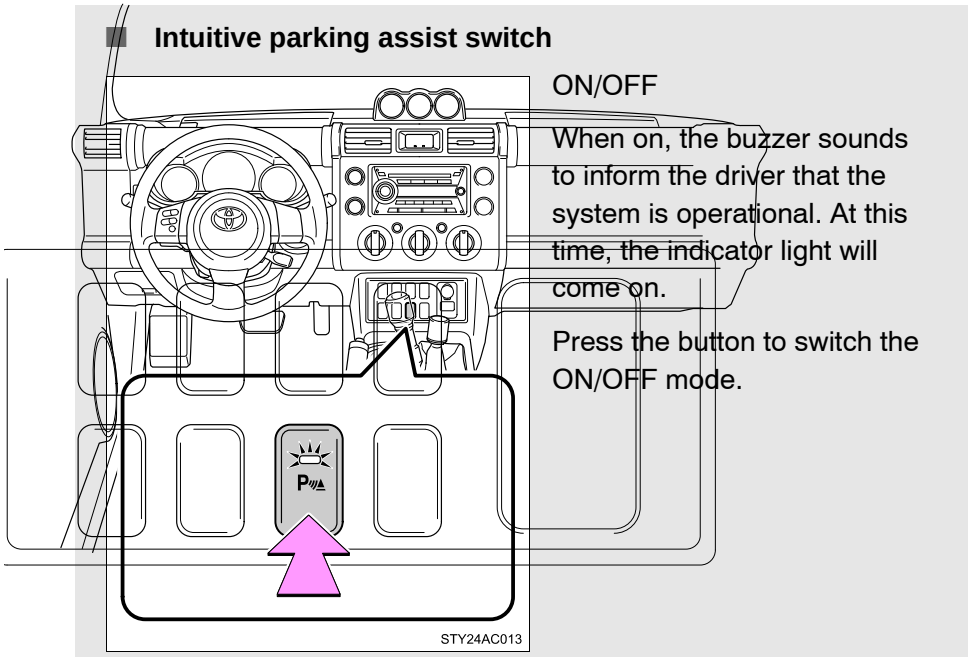

ON/OFF

When on, the buzzer sounds to inform the driver that the system is operational. At this time, the indicator light will come on.

Press the button to switch the ON/OFF mode.

The distance and buzzer

When a sensor detects an obstacle, the buzzer sounds.

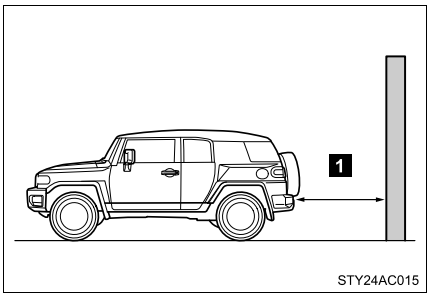

Distance shown as 1	4.9 to 3.3 ft. (150 to 100 cm)	3.3 to 1.6 ft. (100 to 50 cm)	1.6 ft. (50 cm)
Buzzer	Medium	Fast	Continuous

Sensors that operate and detection range

The following diagrams show the se nsor detection range. Note that sensors may not be able to detect obstacles that are extremely close to the vehicle.

Detection range of the sensors

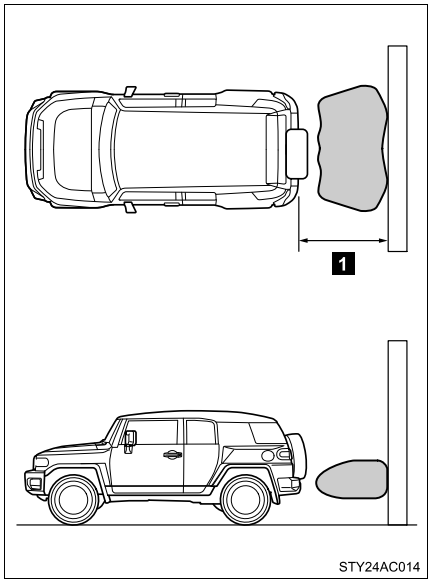

1 Approx. 4.9 ft. (150 cm)

The diagram shows the detection range of the sensors. Note that the sensors may not be able to detect obstacles that are extremely close to the vehicle.

The range of the sensors may change depending on the shape of the object etc.

Sensor detection information

- Certain vehicle conditions and the surrounding environment may affect the ability of a sensor to correctly detect an obstacle. Particular instances where this may occur are listed below.
  - There is dirt, snow or ice on a sensor.
  - A sensor is frozen.
  - A sensor is covered in any way.
  - The vehicle is leaning considerably to one side.
  - On an extremely bumpy road, on an incline, on gravel, or on grass.
  - The vicinity of the vehicle is noisy due to vehicle horns, motorcycle engines, air brakes of large vehicles, or other loud noises producing ultrasonic waves.
  - There is another vehicle equipped with parking assist sensors in the vicinity.
  - A sensor is coated with a sheet of spray or heavy rain.
  - The vehicle is equipped with a fender pole or radio antenna.
  - A bumper or sensor receives a strong impact.
  - The vehicle is approaching a tall or right−angled curb.
  - In harsh sunlight or intense cold weather.
  - The area directly under the bumpers is not detected.
    Objects lower than the sensors or thin stakes etc. may be detected initially, but as they draw closer, they may cease to be detected.
  - A towing hitch is mounted to the vehicle.
  - A non−genuine Toyota suspension (lowered suspension etc.) is installed.

In addition to the examples above, there are instances in which, because of their shapes, signs and other objects may be judged by a sensor to be closer than they are.

- The shape of the obstacle may prevent a sensor from detecting it. Pay particular attention to the following obstacles:
  - Wires, fences, ropes, etc.
  - Cotton, snow and other materials that absorb radio waves
  - Sharply−angled objects
  - Low obstacles
  - Tall obstacles with upper sections projecting outwards in the direction of your vehicle

Certification (Canada only)

This ISM device compiles with Canadian ICES–001.

CAUTION

Caution when using the intuitive parking assist

Observe the following precautions.
Failure to do so may result in the vehicle being unable to be driven safely and possibly cause an accident.

- Do not use the sensor at speeds in excess of 6 mph (10 km/h).
- Do not attach any accessories within the sensor range.

NOTICE

Notes when washing the vehicle

Do not apply intensive bursts of water or steam to the sensor area.
Doing so may result in the sensor malfunctioning.

Use the four−wheel drive control lever to select the following transfer modes.

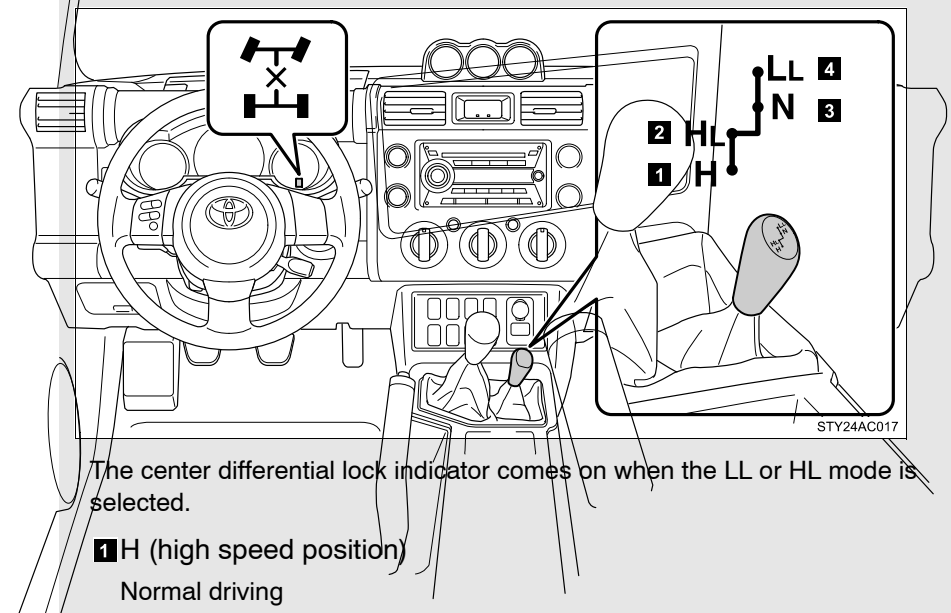

The center differential lock indicator comes on when the LL or HL mode is selected.

1 H (high speed position)

Normal driving

2 HL (high speed position, center differential locked)

When your vehicle's wheel gets stuck in ditch or when you are driving on a slippy or bumpy surface.

3 N (neutral position)

No power is delivered to the wheels.

4 LL (low speed position, center differential locked)

Driving requiring maximum power and traction such as climbing or descending steep hills, off−road driving and hard pulling in sand or mud, etc.

Shifting between H and HL

- You need not to depress the clutch pedal.
- If the center differential lock indicator does not come on when you shift from H to HL, drive straight ahead while accelerating or decelerating.
- If the center differential lock indicator does not go off when you shift from HL to H, drive straight ahead while accelerating or decelerating, or drive in reverse.

Shifting from HL to LL

Stop the vehicle or reduce your speed to less than 5 mph (8 km/h). Depress the clutch pedal and move the four–wheel drive control lever.

Shifting from LL to HL

Depress the clutch pedal and move the four–wheel drive control lever.

Shifting to HL or LL

VSC is automatically turned off.

NOTICE

To prevent damage to the center differential

- For normal driving on dry and hard surface roads, unlock the center differential.
- Shift to H after the wheels are out of the ditch or off the slippery or bumpy surface.
- Do not shift to any position when the vehicle is cornering or when its wheels spinning freely off the ground.

Shifting from H to HL while driving

Never move the four–wheel drive control lever if wheels are slipping. Stop the slipping or spinning before shifting.

Use the front−wheel drive control le ver to select the following trans−fer modes.

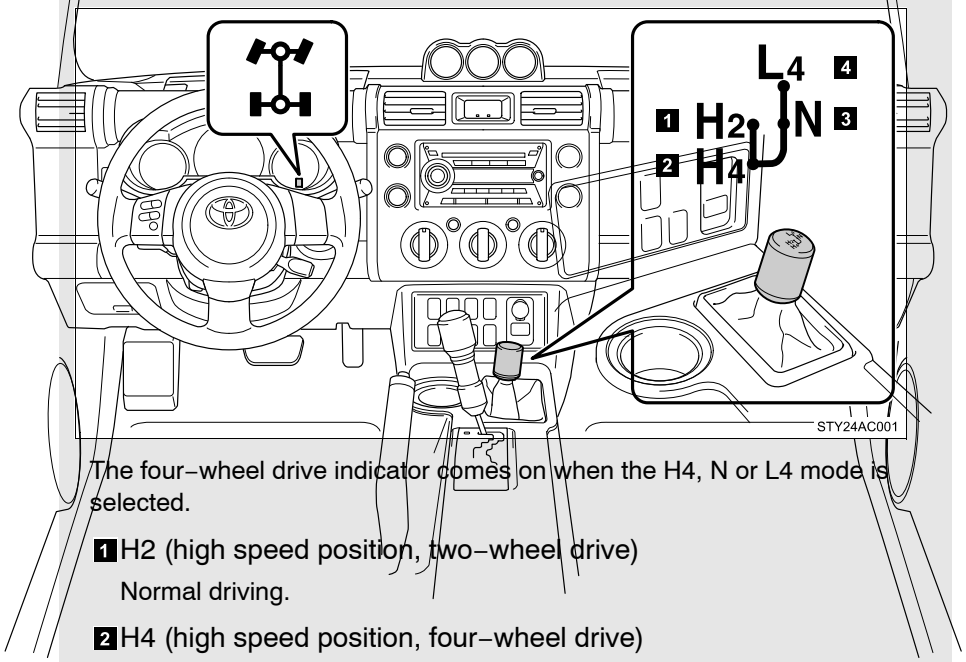

The four−wheel drive indicator comes on when the H4, N or L4 mode is selected.

1 H2 (high speed position, two−wheel drive)

Normal driving.

2 H4 (high speed position, four−wheel drive)

Greater traction than two wheel drive.
When you experience a loss of power, such as wheel slipping.

3 N (neutral position)

No power is delivered to the wheels.

4 L4 (low speed position, four−wheel drive)

Driving requiring maximum power and traction such as climbing or descending steep hills, off−road driving and hard pulling in sand or mud, etc.

Shifting between H2 and H4

- Reduce your speed to less than 50 mph (80 km/h) and shift the front−wheel drive control lever from H2 to H4.

  If you have trouble shifting in cold weather, reduce your speed or stop the vehicle.

- If the four−wheel drive indicator does not go off when you shift from H4 to H2, drive straight ahead while accelerating or decelerating, or drive in reverse.

Shifting between H4 and L4

Stop the vehicle, shift the shift lever to N and shift the front−wheel drive control lever.

Shifting to H4 or L4.

VSC is automatically turned off.

Four−wheel drive usage frequency

You should drive in four−wheel drive for at least 10 miles (16 km) each month.

This will assure that the front drive components are lubricated.

CAUTION

Shift from H2 to H4 while driving

Never move the front−wheel drive control lever if wheels are slipping. Stop the slipping or spinning before shifting.

Active traction control system (if equipped)

The active traction control system automatically helps prevent the spinning of 4 wheels when the vehicle is started or accelerated on slippery road surfaces.

System operation

STEP 1 Vehicles with an automatic transmission:
Shift the front−wheel drive control lever into L4.

Vehicles with a manual transmission:
Shift the four−wheel drive control lever into LL.

STEP 2

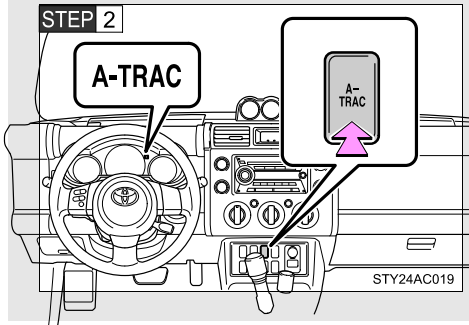

Press the A−TRAC switch to activate the system.

At this time, the active traction control system indicator will come on.

To cancel the system, push the switch again.

When the active traction control system is operating

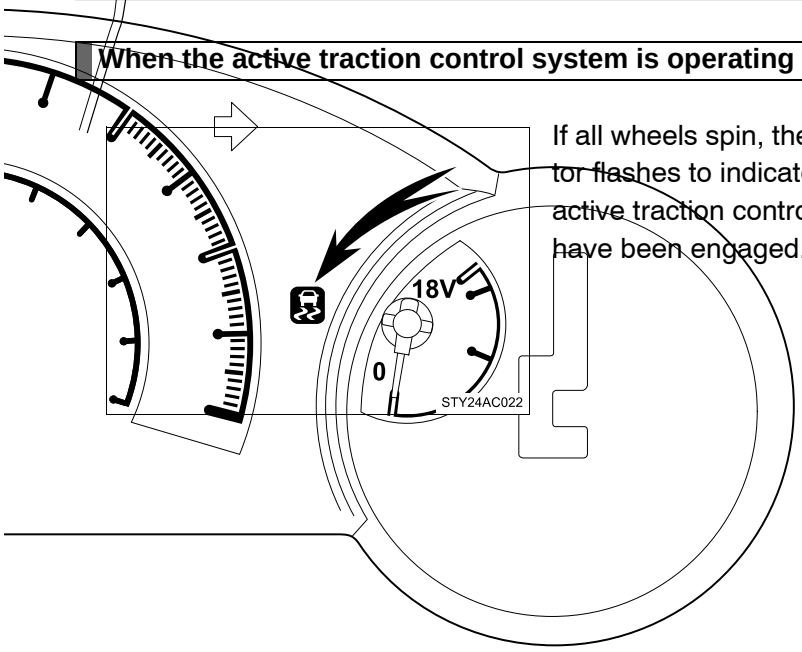

If all wheels spin, the slip indicator flashes to indicate that the active traction control system have been engaged.

■ **When the rear differential is locked (vehicles with the rear differential lock system)**

The active traction control system is activated only when the vehicle speed is less than 4 mph (6 km/h).

■ **Sounds and vibrations caused by the active traction control system**

- A sound may be heard from the engine compartment when the engine is started or just after the vehicle begins to move. This sound does not indicate that a malfunction has occurred in the system.
- Vibrations may be felt through the vehicle body and steering. It may occur when the system is operating.

■ **If the brake system overheats**

The system will cease operation and a buzzer will sound to alert the driver. Stop the vehicle in a safe place. (There is no problem with continuing normal driving.)

CAUTION

■ **The active traction control system may not operate effectively when**

Directional control and power may not be achievable while driving on slippery road surfaces, even if the active traction control system is operating. Do not drive the vehicle in conditions where stability and power may be lost.

AUTO LSD system (2WD models)

The AUTO LSD system aids tractio n by using the traction control system to control engine performance and braking when one of the rear wheels begins to spin.

The system should be used only wh en wheel spinning occurs in a ditch or rough surface.

The system is activated when driv ing at a speed under 62 mph (100 km/h).

This system is effective in case one of the rear wheels is spinning.

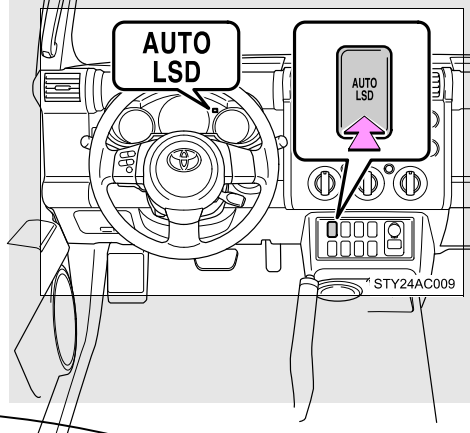

Press the AUTO LSD switch to turn on the system.

At this time, the AUTO LSD indicator will come on.

To turn off the system, push the switch again.

If the engine is turned off while the AUTO LSD indicator is on and then restarted, the indica− tor will turn off automatically.

When the AUTO LSD system is operating

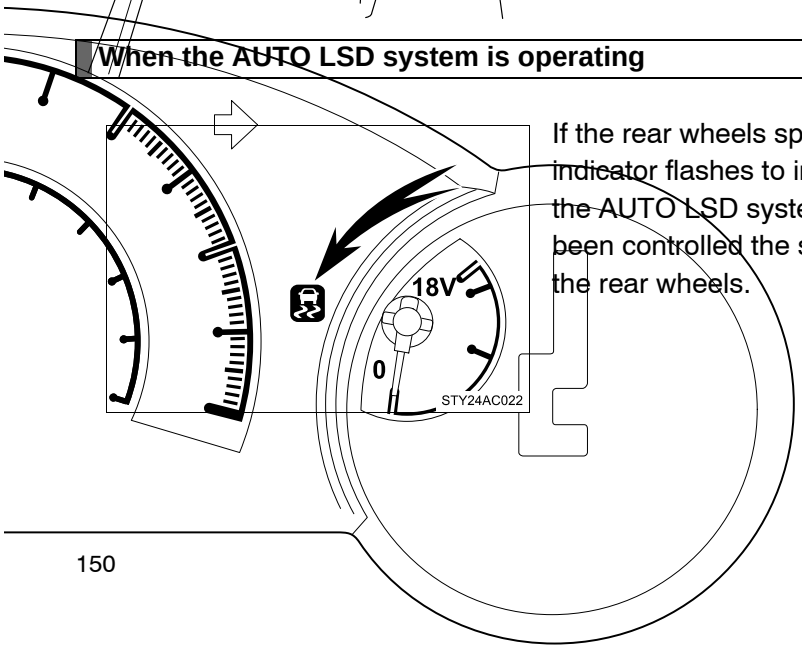

If the rear wheels spin, the slip indicator flashes to indicate that the AUTO LSD system have been controlled the spinning of the rear wheels.

If the brake system overheats

The system will cease operation and a buzzer will sound to alert the driver. Stop the vehicle in a safe place. (There is no problem with continuing normal driving.)

CAUTION

To avoid an accident

- Do not use the AUTO LSD system in conditions other than the above. A much greater steering effort and more careful cornering control will be required.
- Do not drive with the AUTO LSD switch continuously turned on.

Rear differential lock system (if equipped)

The rear differential lock system is provided for use only when wheel spinning occurs in a ditch or on a slippery or ragged surface.

The rear differential lock system is effective in case one of the rear wheels is spinning.

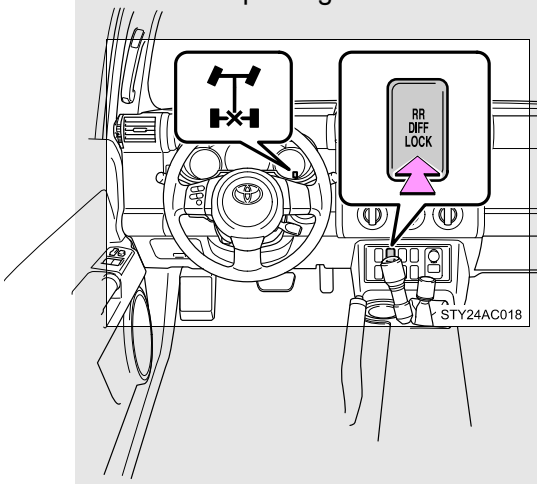

Press the RR DIFF LOCK switch to lock the rear differential.

At this time, the indicator will blink. Wait a few seconds for the system to complete operation. After the rear differential is locked, the rear differential lock indicator will stop blinking and remain on.

To unlock the rear differential, push the switch again.

Using the rear differential lock system

▶Automatic transmission

STEP 1 4WD models: Before using the rear differential lock system. Shift the front−wheel drive control lever into L4 to see if this is sufficient. If this has no effect, additionally use the rear differential lock system.

STEP 2 Be sure to stop the wheels.

STEP 3 Press the RR DIFF LOCK switch.

After the rear differential is locked, the indicator will come on.

STEP 4 Gently depress the accelerator pedal.

Unlock the rear differential as soon as the vehicle moves out.
To unlock the rear differential, push the switch again.

▶Manual transmission

STEP 1 Before using the rear differential lock system.
Shift the four−wheel drive control lever into LL to see if this is sufficient. If this has no effect, additionally use the rear differential lock system.

STEP 2 Be sure to stop the wheels.

STEP 3 Depress the clutch pedal.

STEP 4 Press the RR DIFF LOCK switch.
After the rear differential is locked, the indicator will come on.

STEP 5 Slowly release the clutch pedal.

Unlock the rear differential as soon as the vehicle moves out.
To unlock the rear differential, push the switch again.

■ **Locking the rear differential**

● When the rear differential is locked, VSC is automatically turned off. (The rear differential lock and VSC OFF indicators come on.)

● The following systems do not operate when the rear differential is locked. It is normal operation for the ABS warning light, VSC OFF indicator and slip indicator to be on at this time.

•ABS
• Brake assist system
•VSC
•TRAC

■ **The rear differential lock is disengaged when**

● Shift the four−wheel drive control lever to H or HL. (4WD models with a manual transmission)

● Shift the front−wheel drive control lever to H2 or H4. (4WD models with an automatic transmission)

Never forget to turn off the switch after using this feature.

■ **After unlocking the rear differential**

Check the indicator go off, turn the engine switch to the ON position, but do not start the engine.

CAUTION

To avoid an accident

- Do not use the rear differential lock system except when wheel spinning occurs in a ditch or on a slippery or ragged surface. Large steering effort and careful cornering control will be required.
- Do not lock the rear differential until the wheels have stopped spinning. Otherwise, the vehicle may move in an unexpected direction when the differential lock is engaged, resulting in an accident. This may also lead to possible damage to differential lock component parts.
- Do not drive over 5 mph (8 km/h) when the differential is locked.
- Do not keep driving with the RR DIFF LOCK switch on.

The switch allows the vehicle to be driven out of difficult situations by cranking the engine with the clutch engaged.

Never use the switch for normal engine starting. Be sure to follow the starting procedure. (P. 114)

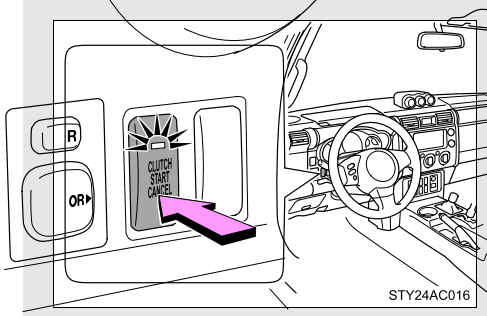

Press the CLUTCH START CANCEL switch to cancel the clutch start system with the engine switch is turned to the ON position.

The indicator comes on when the clutch start system is canceled.

The clutch start cancel switch is automatically turned off when the engine switch is turned off.

Clutch start system

The system is designed to keep the starter motor from operating if the clutch pedal is not depressed all the way down.

Driving assist systems

To help enhance driving safety a nd performance, the following systems operate automatically in response to various driving situations. Be aware, however, that these systems are supplementary and should not be relied upon too heavily when operating the vehicle.

■ ABS (Anti−lock Brake System)

Restrains the vehicle from slipping when driving on slick road surfaces or in the event of sudden braking.

■ Brake Assist

Generates an increased level of braking force after the brake pedal is depressed, when the system detects a panic stop situation.

■ VSC (Vehicle Stability Control)

Helps the driver to control skidding when swerving suddenly or turning on slippery road surfaces.

■ TRAC (Traction Control)

Maintains drive power and prevents the rear wheels (2WD models) or all wheels (4WD models) from spinning when starting the vehicle or accelerating on slippery roads.

When VSC/TRAC are operating

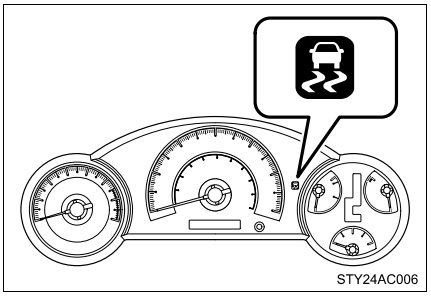

If the vehicle is in danger of slipping, or if the rear wheels (2WD models) or all wheels (4WD models) spin, the indicator light flashes to indicate that VSC/TRAC have been engaged.

A buzzer (intermittent) sounds to indicate that VSC is operating.

To disable VSC

If the vehicle gets stuck in fresh snow or mud, VSC may reduce power from the engine to the wheels. You may need to turn the system off to enable you to rock the vehicle in order to free it.

▶Vehicles with rear differential lock system

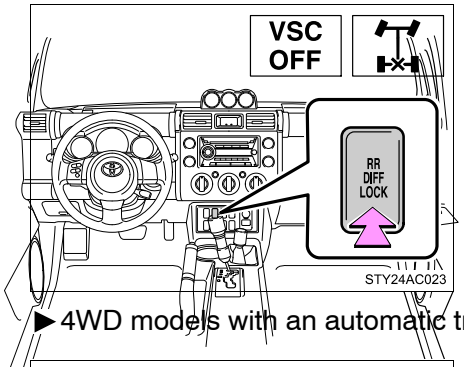

Press the RR DIFF LOCK switch.

The rear differential lock and VSC OFF indicators should come on.

Push the switch again to turn the system back on.

▶4WD models with an automatic transmission

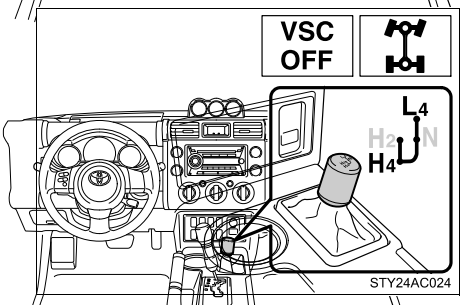

Shift the front−wheel drive control lever to H4 or L4.

The four−wheel drive and VSC OFF indicators should come on.

Shift the lever to H2, turn the system back on.

▶4WD models with a manual transmission

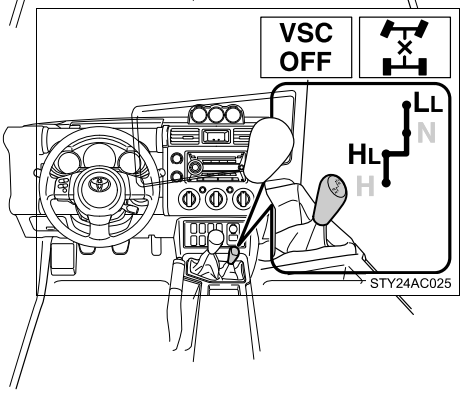

Shift the four−wheel drive control lever to HL or LL.

The center differential lock and VSC OFF indicators should come on.

Shift the lever to H, turn the system back on.

Sounds and vibrations caused by the ABS, TRAC, VSC and brake assist system

- A sound may be heard from the engine compartment when the engine is started or just after the vehicle begins to move. This sound does not indicate that a malfunction has occurred in any of these systems.
- Any of the following conditions may occur when the above systems are operating. None of these indicates that a malfunction has occurred.
  - Vibrations may be felt through the vehicle body and steering.
  - A motor sound may be heard after the vehicle comes to a stop.
  - The brake pedal may pulsate slightly after the ABS is activated.
  - The brake pedal may move down slightly after the ABS is activated.

If the brake system overheats

TRAC will cease operation and a buzzer will sound to alert the driver. Stop the vehicle in a safe place. (There is no problem with continuing normal driving.)

CAUTION

■ **The ABS does not operate effectively when**

- The limits of the gripping performance have been exceeded.
- The vehicle hydroplanes while driving at high speed on the wet or slick road.

■ **Stopping distance when the ABS is operating will exceed that of normal conditions**

The ABS is not designed to shorten the vehicle's stopping distance. Always maintain a safe distance from the vehicle in front of you in the following situations.

- When driving on dirt, gravel or snow−covered roads
- When driving with tire chains
- When driving over bumps in the road
- When driving over roads with potholes or roads with uneven roads

■ **When VSC is activated**

The slip indicator flashes and a warning buzzer sounds. Always drive carefully. Reckless driving may cause an accident. Exercise particular care when the indicator flashes and a buzzer sounds.

■ **TRAC may not operate effectively when**

Directional control and power may not be achievable while driving on slippery road surfaces, even if TRAC is operating.
Do not drive the vehicle in conditions where stability and power may be lost.

■ **Replacing tires**

Make sure that all tires are of the same size, brand, tread pattern and total load capacity. In addition, make sure that the tires are inflated to the appropriate tire pressure level.

The ABS and VSC will not function correctly if different tires are fitted on the vehicle.

Contact your Toyota dealer for further information when replacing tires or wheels.

■ **Handling of tires and suspension**

Using tires with any kind of problem or modifying the suspension will affect the driving assist systems, and may cause the system to malfunction.

Off−road precautions

This vehicle belongs to the utility vehicle class, which has higher ground clearance and narrower tread in relation to the height of its center of gravity to make it capable of performing in a wide variety of off−road applications.

Off−road vehicle feature

- Specific design characteristics give it a higher center of gravity than ordinary passenger cars. This vehicle design feature causes this type of vehicle to be more likely to rollover. And, utility vehicles have a significantly higher rollover rate than other types of vehi−cles.
- An advantage of the higher ground clearance is a better view of the road allowing you to anticipate problems.
- It is not designed for cornering at the same speeds as ordinary passenger cars any more than lo w−slung sports cars designed to perform satisfactorily under off−road conditions. Therefore, sharp turns at excessive speeds may cause rollover.

CAUTION

■ **Off−road vehicle precautions**

Always observe the following precautions to minimize the risk of serious personal injury or damage to your vehicle:

- In a rollover crash, an unbelted person is significantly more likely to die than a person wearing a seat belt. Therefore, the driver and all passengers should fasten their seat belts whenever the vehicle is moving.
- Avoid sharp turns or abrupt maneuvers, if at all possible.
  Failure to operate this vehicle correctly may result in loss of control or vehicle rollover causing death or serious injury.
- Loading cargo on the roof luggage carrier will make the center of the vehicle gravity higher. Avoid high speeds, sudden starts, sharp turns, sudden braking or abrupt maneuvers, otherwise it may result in loss of control or vehicle rollover due to failure to operate this vehicle correctly.
- Always slow down in gusty crosswinds. Because of its profile and higher center of gravity, your vehicle is more sensitive to side winds than an ordinary passenger car. Slowing down will allow you to have better control.
- When driving off−road or in rugged terrain, do not drive at excessive speeds, jump, make sharp turns, strike objects, etc. This may cause loss of control or vehicle rollover causing death or serious injury. You are also risking expensive damage to your vehicle's suspension and chassis.
- Do not drive horizontally across steep slopes. Driving straight up or straight down is preferred. Your vehicle (or any similar off−road vehicle) can tip over sideways much more easily than forward or backward.

Off−road driving

When driving your vehicle off−road, please observe the following precautions to ensure your driving enjoyment and to help prevent the closure of areas to off−road vehicles.

- Drive your vehicle only in areas where off−road vehicles are permitted to travel.
- Respect private property. Get owner's permission before entering private property.
- Do not enter areas that are closed. Honor gates, barriers and signs that restrict travel.
- Stay on established roads. When conditions are wet, driving techniques should be changed or trav el delayed to prevent damage to roads.

Additional information for off−road driving

▶For owners in U.S. mainland, Hawaii and Puerto Rico:

To obtain additional information pertaining to driving your vehicle off−road, consult the following organizations.

- State and Local Parks and Recreation Departments
- State Motor Vehicle Bureau
- Recreational Vehicle Clubs
- U.S. Forest Service and Bureau of Land Management

CAUTION

Off−road driving precautions

Always observe the following precautions to minimize the risk of serious personal injury or damage to your vehicle:

- Drive carefully when off the road. Do not take unnecessary risks by driving in dangerous places.
- Do not grip the steering wheel spokes when driving off−road. A bad bump could jerk the wheel and injure your hands. Keep both hands and especially your thumbs on the outside of the rim.
- Always check your brakes for effectiveness immediately after driving in sand, mud, water or snow.
- After driving through tall grass, mud, rock, sand, rivers, etc., check that there is no grass, bush, paper, rags, stone, sand, etc. adhering or trapped on the underbody. Clear off any such matter from the underbody. If the vehicle is used with these materials trapped or adhering to the underbody, a breakdown or fire could occur.
- In a rollover crash, an unbelted person is significantly more likely to die than a person wearing a seat belt. Therefore, the driver and all passengers should fasten their seat belts whenever the vehicle is moving.
- When driving off−road or in rugged terrain, do not drive at excessive speeds, jump, make sharp turns, strike objects, etc. This may cause loss of control or vehicle rollover causing death or serious injury. You are also risking expensive damage to your vehicle's suspension and chassis.

NOTICE

■ **To prevent the water damage**

- Take all necessary safety measures to ensure that water damage to the engine or other components does not occur.

  Water entering the engine air intake will cause severe engine damage.

- Water entering the automatic transmission will cause deterioration in shift quality, locking up of your transmission accompanied by vibration, and ultimately damage.

- Water can wash the grease from wheel bearings, causing rusting and premature failure, and may also enter the differentials, transmission and transfer case, reducing the gear oil's lubricating qualities.

■ **When you drive through water**

If driving through water, such as when crossing shallow streams, first check the depth of the water and the bottom of the river bed for firmness. Drive slowly and avoid deep water.

■ **Inspection after off–road driving**

- Sand and mud that has accumulated in brake drums and around brake discs may affect braking efficiency and may damage brake system components.

- Always perform a maintenance inspection after each day of off–road driving that has taken you through rough terrain, sand, mud, or water. For scheduled maintenance information, refer to the "Scheduled Maintenance Guide" or "Owner's Manual Supplement".

Take notice of the following information about storage precau−tions, cargo capacity and load.

- Stow cargo and luggage in the luggage compartment whenever possible.
- Be sure all items are secured in place.
- Be careful to keep the vehicle level. Placing the weight as far for−ward as possible helps maintain vehicle balance.
- For better fuel economy, do not carry unnecessary weight.

Capacity and distribution

Cargo capacity depends on the total weight of the occupants.

(Cargo capacity) = (Total load capacity) (Total weight of occupants)

Steps for Determining Correct Load Limit—

(1) Locate the statement “The co mbined weight of occupants and cargo should never exceed XXX kg or XXX lbs.” on your vehicle’s placard.

(2) Determine the combined weight of the driver and passengers that will be riding in your vehicle.

(3) Subtract the combined weight of the driver and passengers from XXX kg or XXX lbs.

(4) The resulting figure equals the available amount of cargo and lug−gage load capacity.
For example, if the “XXX” amount equals 1400 lbs. and there will be five 150 lb passengers in your vehicle, the amount of available cargo and luggage load capacity is 650 lbs. (1400 750 (5 150) = 650 lbs.)

(5) Determine the combined weight of luggage and cargo being loaded on the vehicle. That weight may not safely exceed the available cargo and luggage load capacity calculated in Step 4.

(6) If your vehicle will be towing a trailer, load from your trailer will be transferred to your vehicle. Consult this manual to determine how this reduces the available cargo and luggage load capacity of your vehicle.

Example on your vehicle

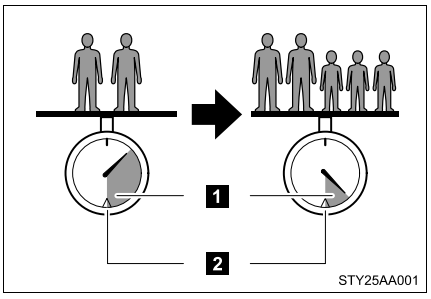

1 Cargo capacity

2 Total load capacity

When 2 people with the combined weight of 366 lb. (166 kg) are riding in your vehicle, which has a total load capacity of 1190 lb. (540 kg), the available amount of cargo and luggage load capacity will be as follows:

1190 lb. 366 lb. = 824 lb. (540 kg 166 kg = 374 kg)

In this condition, if 3 more pa ssengers with the combined weight of 388 lb. (176 kg) get on , the available cargo and luggage load will be reduced as follows:

824 lb. 388 lb. = 436 lb. (374 kg 176 kg = 198 kg)

As shown in the above example, if the number of occupants increases, the cargo and luggage load equaling the combined weight of the occupants who got on later, by an amount. In other words, if an increase in the number of occupants causes an excess of the total load capacity (combined weight of occupants plus cargo and luggage load), you must reduce the cargo and luggage on your vehicle.

CAUTION

■Things that must not be carried in the luggage compartment

The following things may cause a fire if loaded in the luggage compart–ment.

●Receptacles containing gasoline

●Aerosol cans

■Storage precautions

●Do not stack anything in the luggage compartment higher than the seatbacks.
Such items may be thrown about and possibly injure people in the vehicle during sudden braking or in an accident.

●Do not drive with objects on top of the instrument panel.
They may interfere with the driver's field of view or move during sharp acceleration or turning, thus impairing the driver's control of the vehi–cle. In an accident they may injure the vehicle occupants.

●Secure all items in the occupant compartment, as they may shift and injure someone during an accident or sudden braking.

●Never allow anyone to ride in the luggage compartment. It is not designed for passengers. They should ride in their seats with their seat belts properly fastened. Otherwise, they are much more likely to suffer death or serious bodily injury, in the event of sudden braking or a colli–sion.

■Capacity and distribution

●Do not exceed the maximum axle weight rating or the total vehicle weight rating.

●Even if the total load of occupant's weight and the cargo load is less than the total load capacity, do no t apply the load unevenly. Improper loading may cause deterioration of st eering or braking control which may cause death or serious injury.

Vehicle load limits

Vehicle load limits include total load capacity, seating capacity, towing capacity and cargo capacity.

■ **Total load capacity: 1190 lb. (540 kg)**

Total load capacity means the combined weight of occupants, cargo and luggage.

■ **Seating capacity: 5 occupants (Front 2, Rear 3)**

Seating capacity means the maximum number of occupants whose estimated average weight is 150 lb. (68 kg) per person.

Even if the number of occupants are within the seating capacity, do not exceed the total load capacity.

■ **Towing capacity: 5000 lb. (2265 kg)**

Towing capacity means the maximum gross trailer weight (trailer weight plus its cargo weight) that your vehicle is able to tow.

■ **Cargo capacity**

Cargo capacity may increase or decrease depending on the weight and the number of occupants.

■**Total load capacity and seating capacity**

These details are also described on the tire and loading information label.(P. 292)

⚠ CAUTION

■**Overloading the vehicle**

Do not overload the vehicle.
It may not only cause damage to the tires, but also degrade steering and braking ability, resulting in an accident.

Winter driving tips

Carry out the necessary preparations and inspections before driving the vehicle in winter. Always drive the vehicle in a manner appropriate to the prevailing weather conditions.

Pre−winter preparations

- Use fluids that are appropriate to the prevailing outside temperatures.
  - Engine oil
  - Engine coolant
  - Washer fluid
- Have a service technician inspect the level and specific gravity of battery electrolyte.
- Have the vehicle fitted with four snow tires or purchase a set of tire chains for the rear tires.

  Ensure that all tires are the same size and brand, and that chains match the size of the tires.

Before driving the vehicle

Perform the following according to the driving conditions.

- Do not try to forcibly open a window, scrape an outside rear view mirror surface or move a wiper or outside rear view mirror that is frozen. Pour warm water over the frozen area to melt the ice. Wipe away the water immediately to prevent it from freezing.
- To ensure proper operation of th e climate control system fan, remove any snow that has accumulated on the air inlet vents in front of the windshield.
- Remove any ice that has accumulated on the vehicle chassis.
- Periodically check for and remo ve any excess ice or snow that may have accumulated in the wheel well or on the brakes.

When driving the vehicle

Accelerate the vehicle slowly and drive at a reduced speed suitable to road conditions.

When parking the vehicle

Park the vehicle and move the shift lever to P (automatic transmission) or to 1 or R (manual transmission) without setting the parking brake. The parking brak e may freeze up, preventing it from being released.

Regulations on the use of snow chains

- Regulations regarding the use of tire chains vary according to location and type of road. Always check local regulations before installing chains.
- Install the chains on the rear tires.
- Retighten the chains after driving 1/4 – 1/2 mile (0.5 – 1.0 km).

Snow chain installation

Observe the following precautions when installing and removing chains.

- Install and remove tire chains in a safe location.
- Install tire chains on the rear tires only. Do not install tire chains on the front tires.
- Install tire chains following the instructions provided in the accompanying instructions.

CAUTION

Driving with snow tires

Observe the following precautions to reduce the risk of accidents.
Failing to do so may result in a loss of vehicle control and cause death or serious injury.

- Use tires of the size specified for your vehicle.
- Maintain the recommended level of air pressure.
- Do not drive in excess of 75 mph (120 km/h) regardless of the type of snow tires being used.
- Snow tires should be installed on all wheels.
- 4WD models:
  Do not mix tires of different makes, models, tread patterns or treadwear.

Driving with snow chains

Observe the following precautions to reduce the risk of accidents.
Failing to do so may result in the vehicle being unable to be driven safely, and may cause death or serious injury.

- Do not drive in excess of the speed limit specified for the tire chains being used or 30 mph (50 km/h), whichever is lower.
- Avoid driving on bumpy road surfaces or over potholes.
- Avoid sudden turns and braking.
- Slow down sufficiently before entering a curve to ensure that vehicle control is maintained.

NOTICE

Repairing or replacing snow tires

Request repairs of and obtain replacement snow tires from Toyota dealers or legitimate tire retailers.
This is because the removal and attachment of snow tires affects the operation of the tire pressure warning valves and transmitters.

Fitting tire chains

The tire pressure warning valves and transmitters may not function correctly when tire chains are fitted.

Your vehicle is designed primar ily as a passenger−carrying vehicle, thus towing a trailer will have an ad verse effect on handling, perfor−mance, braking, durability, and fu el consumption. For your safety and the safety of others, do not overload the vehicle or trailer.

Toyota warranties do not apply to damage or malfunction caused by towing a trailer for commercial purposes.

Weight limits

Confirm the total trailer weight, gross vehicle weight, gross axle weight and trailer tongue load are all within the limits.

Gross vehicle weight

The gross vehicle weight must not exceed the Gross Vehicle Weight Rating (GVWR) indicated on the Certification Label. The gross vehicle weight is the sum weight of the unloaded vehicle, driver, passengers, luggage, hitch and trailer tongue load. Also included is the weight of any special equipment installed on your vehicle.

Gross axle weight

The load on either the front or rear axle resulting from distribu−tion of the gross vehicle weight on both axles must not exceed the Gross Axle Weight Rating (GAWR) listed on the Certification Label.

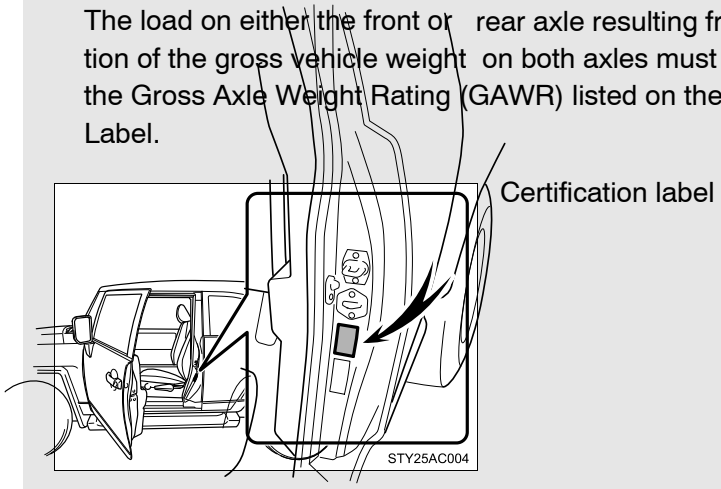

Trailer tongue load

The trailer cargo load should be distributed so that the tongue load is 9 to 11% of the total trailer weight, not exceeding the maximum 500 lb. (227 kg) (Tongue load / Total trailer weight 100 = 9 to 11%)

The total trailer weight and tongue load can be measured with platform scales found at a highway weighing stations, building supply company, trucking company, junk yards, etc.

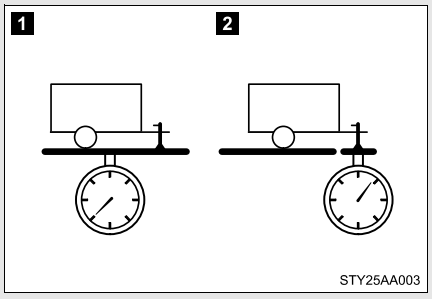

1 Total trailer weight

2 Tongue load

Towing a trailer

Consult your Toyota dealer for further information about additional requirements such as a towing kits, etc.

Hitch and tow hitch receiver

Hitch

Trailer hitch assemblies have different weight capacities established by the hitch manufacturer. Even though the vehicle may be rated for towing a higher weight, the operator must never exceed the maximum weight rating specified for the trailer hitch.

Selecting trailer ball

Use the correct trailer ball for your application.

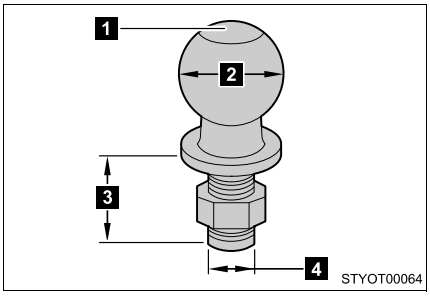

1 Trailer ball load rating

Matches or exceeds the gross trailer weight rating of the trailer.

2 Ball diameter

Matches the size of the trailer coupler. Most couplers are stamped with the required trailer ball size.

3 Shank length

Protrudes beyond the bottom of the lock washer and nut at least 2 threads.

4 Shank diameter

Matches the ball mount hole diameter size.

Connecting trailer lights

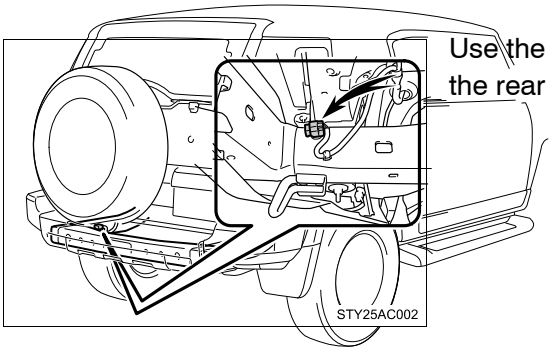

Use the wire harness stored in the rear end underbody.

Before towing

Check that the following conditions are met:

- Ensure that your vehicle's tires are properly inflated. (P. 370)
- Trailer tires should be inflated according to the trailer manufacturer's recommendation.
- All trailer lights work to be legal.
- Confirm all lights work each time you connect them.
- The trailer ball is set up at the proper height for the coupler on the trailer.
- Check that your vehicle remains level when a loaded or unloaded trailer is hitched. Do not drive if the vehicle is not level, and check for improper tongue load, overloading, worn suspension, or other possible causes.
- Make sure the trailer cargo is securely loaded.
- Check that your rear view mirrors conform to any federal, state/provincial or local regulations. If they do not, install rear view mirrors appropriate for towing purposes.

Break−in schedule

- Toyota recommends that you do not use a new vehicle or a vehicle with any new power train components (engine, transmission, differential, wheel bearings, etc.) to tow a trailer for the first 500 miles (800 km) of driving.

Maintenance

- If you tow a trailer, your vehicle will require more frequent maintenance due to the additional load. (See "Scheduled Maintenance Guide" or "Owner's Manual Supplement".)
- Retighten the fixing bolts of the towing ball and bracket after approximately 600 miles (1000 km).

CAUTION

■ **To avoid accident or injury**

- The total trailer weight (trailer weight plus the weight of cargo) must not exceed 5000 lb. (2265 kg)
- If a trailer and cargo weight over 2000 lb. (907 kg), use a sway control device with sufficient capacity.
- The gross combined weight (sum of your vehicle weight plus its load and the total trailer weight) must not exceed the following.

  2WD models
  9200 lb. (4173 kg)

  4WD models
  9500 lb. (4309 kg)
- Do not exceed the trailer hitch assembly weight, gross vehicle weight, gross axle weight and trailer tongue load capacities.
- Never load more weight in the back than in the front of the trailer. About 60% of the load should be in the front half of the trailer, and the remaining 40% in the rear.
- The tow hitch receiver installed on your vehicle must never be used on another vehicle.

■ **Hitches**

- If you wish to install a trailer hitch, your Toyota dealer should be consulted.
- Use only a hitch that conforms to the total trailer weight requirement.
- Follow the directions supplied by the hitch manufacturer.
- Lubricate the hitch ball with a light coat of grease.
- Remove the trailer hitch whenever y ou are not towing a trailer to reduce the possibility of additional damage caused by the hitch if your vehicle is struck from behind.

CAUTION

■ **When towing a trailer**

- If the total trailer weight exceeds 1000 lb. (453 kg), trailer brakes are required.
- Never tap into your vehicle's hydraulic system, as this will lower the vehicle's braking effectiveness.
- Never tow a trailer without using a safety chain securely attached to both the trailer and the vehicle. If damage occurs to the coupling unit or hitch ball, there is danger of the trailer wandering into another lane.

NOTICE

■ **When installing a trailer hitch**

Use only the position recommended by your Toyota dealer. Do not install the trailer hitch on the bumper; this may cause body damage.

■ **Brakes**

Toyota recommends trailers with brakes that conform to any applicable federal and state/provincial regulations.

■ **Safety chain**

A safety chain must always be used between the towing vehicle and the trailer. Leave sufficient slack in the chain for turns. The chain should cross under the trailer tongue to prevent the tongue from dropping to the ground in the case that it becomes damaged or separated. For the correct safety chain installation procedure, ask your Toyota dealer.

■ **Do not directly splice trailer lights**

Directly splicing trailer lights may damage your vehicle's electrical system and cause a malfunction.

Trailer towing tips

Your vehicle will handle differently when towing a trailer. The three main causes of vehicle–trailer ac cidents are driver error, excessive speed and improper trailer loading. Keep these in mind when towing.

- Before starting out, check the trailer's light and the vehicle–trailer connections. Recheck after driving a short distance.
- Practice turning, stopping and reve rsing with the trailer attached in an area away from traffic until you become accustomed to the feel of the vehicle.
- Reversing with a trailer attached is difficult and requires practice. Grip the bottom of the steering wheel and move your hand to the left to move the trailer to the left. Move your hand to the right to move the trailer to the right. (This generally opposite to reversing without a trailer attached.) Avoid sharp or prolonged turning. Have someone guide you when reversing to reduce the risk of an acci–dent.
- As stopping distance is increased when towing a trailer, vehicle–to–vehicle distance should be increased. For each 10 mph (16 km/h) of speed, allow at least one vehicle and trailer length.
- Avoid sudden braking as you may skid, resulting in jackknifing and loss of control. This is especially true on wet or slippery surfaces.
- Avoid jerky starts or sudden acceleration. Vehicles with a manual transmission, prevent excessive clutch slippage by keeping engine rpm low and not racing the engine. Always start out in first gear.
- Avoid jerky steering and sharp turns, and slow down before mak–ing a turn.

- Note that when making a turn, the trailer wheels will be closer than the vehicle wheels to the inside of the turn. Compensate by making a larger than normal turning radius.
- Crosswinds and rough roads will adversely affect handling of your vehicle and trailer, causing sway . Periodically check the rear to prepare for being passed by large trucks or buses, which may cause your vehicle and trailer to sway. If swaying occurs, firmly grip the steering wheel, reduce speed immediately but gradually, and steer straight ahead. Never increase speed. If you make no extreme correction with the stee ring or brakes, your vehicle and trailer will stabilize.
- Take care when passing other vehicles. Passing requires considerable distance. After passing a vehicle, do not forget the length of your trailer, and be sure you hav e plenty of room before changing lanes.
- In order to maintain engine braking efficiency, do not use the transmission in D (automatic transmission) or 6 (manual transmission).
- Due to the added load of the trailer, your vehicle's engine may overheat on hot days (at temper atures over 85°F [30°C]) when driving up a long or steep grade. If the engine coolant temperature gauge indicates overheating, immediately turn off the air conditioning (if in use), pull your vehicle off the road and stop in a safe spot. (P. 356)

- Always place wheel blocks under both the vehicle and the trailer wheels when parking. Apply the parking brake firmly, and put the transmission in P (automatic transmission) or in 1 or R (manual transmission). Avoid parking on a slope, but if unavoidable, do so only after performing the following:

STEP 1 Apply the brakes and keep them applied.

STEP 2 Have someone place wheel blocks under both the vehicle and trailer wheels.

STEP 3 When the wheel blocks are in place, release the brakes slowly until the blocks absorb the load.

STEP 4 Apply the parking brake firmly.

STEP 5 Shift into 1 or R (manual transmission) or P (automatic transmission) and turn off the engine.

- When restarting after parking on a slope:

STEP 1 With the transmission in P (automatic transmission) or the clutch pedal (manual transmission) depressed, start the engine. On vehicles with an au tomatic transmission, be sure to keep the brake pedal pressed.

STEP 2 Shift into a forward gear. If reversing, shift into R.

STEP 3 Release the parking brake (also brake pedal on vehicles with an automatic transmission), and slowly pull or back away from the wheel blocks. Stop and apply the brakes.

STEP 4 Have someone retrieve the blocks.

CAUTION

■ **To avoid an accident**

- Do not exceed 45 mph (72 km/h) or posted towing speed limit, whichever is lower. As instability (swaying) of the towing vehicle–trailer combination increases as speed increases, exceeding 45 mph (72 km/h) may cause loss of control.
- Slow down and downshift before descending steep or long downhill grades. Do not make sudden downshifts.
- Avoid holding the brake pedal down too long or too frequently. This could cause the brakes to overheat and result in reduced braking efficiency.

Dinghy towing

Your vehicle is not designed to be dinghy towed (with 4 wheels on the ground) behind a motor home.

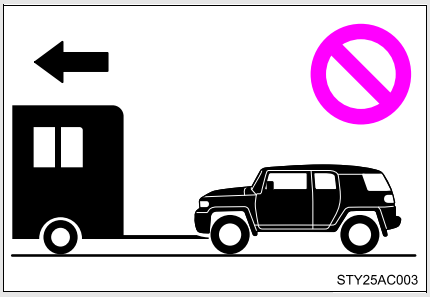

NOTICE

■ **To avoid serious damage to your vehicle**

Do not tow your vehicle with four wheels on the ground.

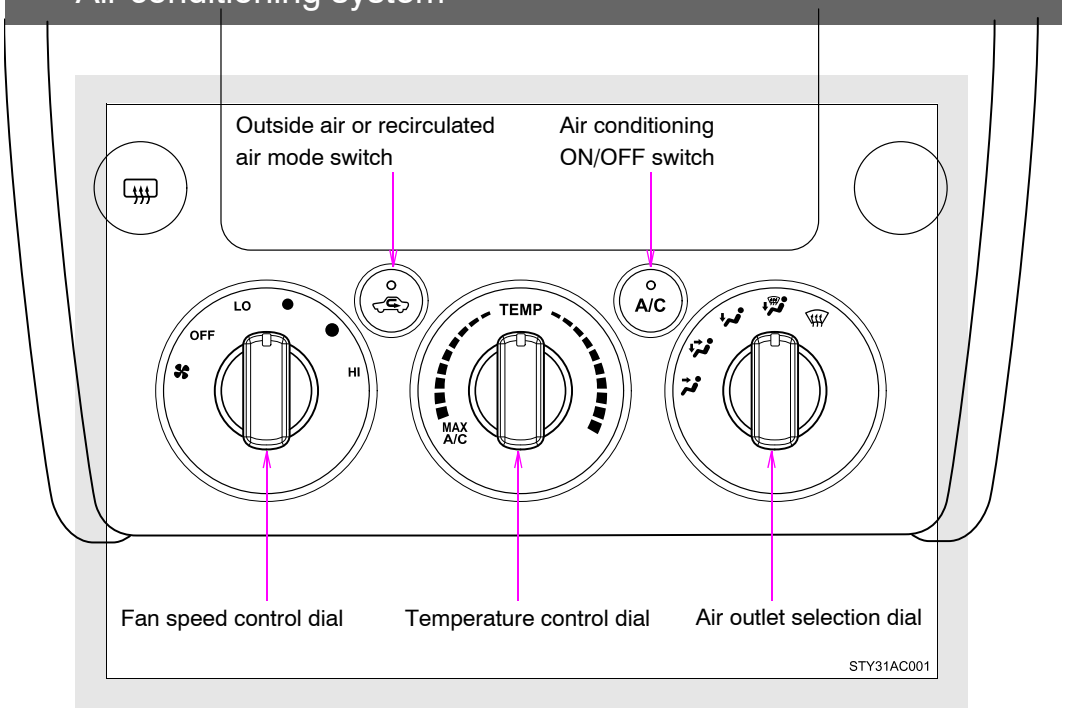

Adjusting the settings

Adjusting the temperature setting

Turn the temperature control dial clockwise (warm) or counter−clockwise (cool).

If A/C is not pressed, the system will blow ambient temperature air or heated air.

For quick cooling, turn the temperature control dial to the MAX A/C position. The air conditioning will automatically turn on and the air intake selector will be set to recirculated air mode.

Adjusting the fan speed

Turn the fan speed control dial clockwise (increase) or counter−clockwise (decrease).

Set the dial to OFF to turn the fan off.

Selecting the air outlets

Set the air outlet selection dial to an appropriate position.

The positions between the air outlet selections shown below can also be selected for more detailed adjustment.

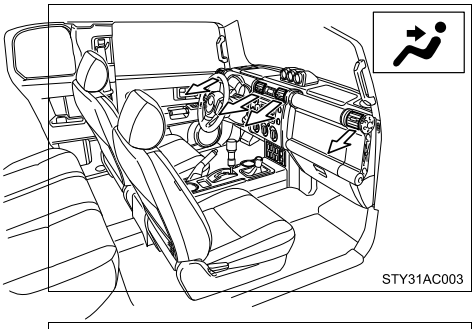

When the dial is set to air flows to the upper body.

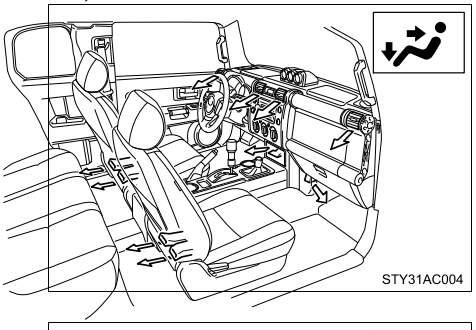

When the dial is set to air flows to the upper body and feet.

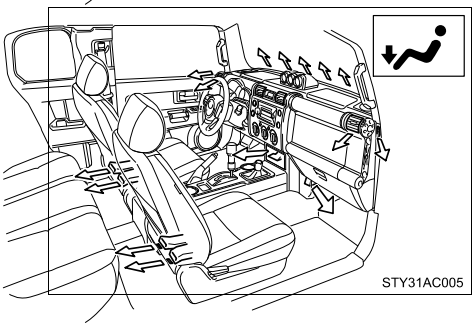

When the dial is set to air flows to the feet.

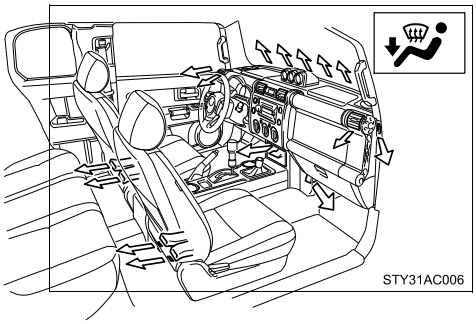

When the dial is set to air flows to the feet and the wind−shield defogger operates.

The air intake selector is automat−ically set to outside air mode.

To return the recirculated air mode, press .

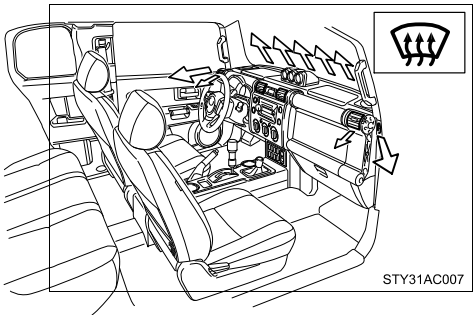

When the dial is set to air flows to the windshield and side windows.

The air intake selector is automat−ically set to outside air mode.

In this position, the air intake selector cannot be changed to the recirculated air mode.

■ Switching between outside air and recirculated air modes

Press .

The mode switches between (outside air mode) and (recirculated air mode) each time the switch is pressed.

■ If the ambient temperature drops while using the recirculated air mode

The air intake mode automatically changes from recirculated air mode to outside air mode after a few minutes.

To cancel this function:

Press and hold for longer than 2 seconds.

To reactivate this function:
Turn the engine switch to the LOCK or ACC position.

Adjusting the position of the air outlets

▶Center outlets

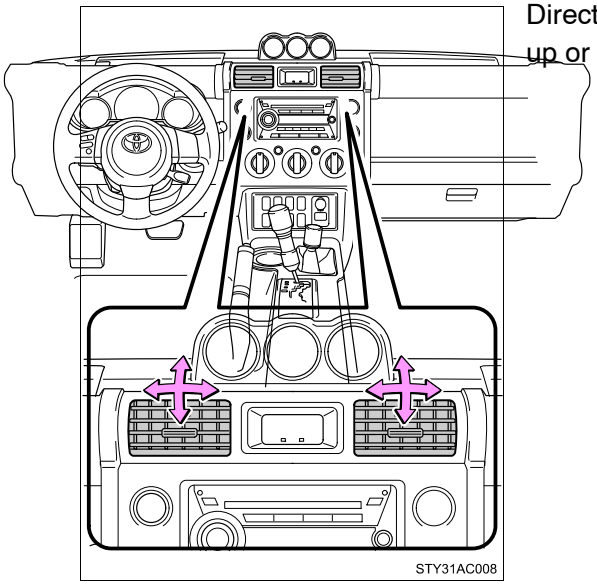

Direct air flow to the left or right, up or down.

▶ Right and left side outlets

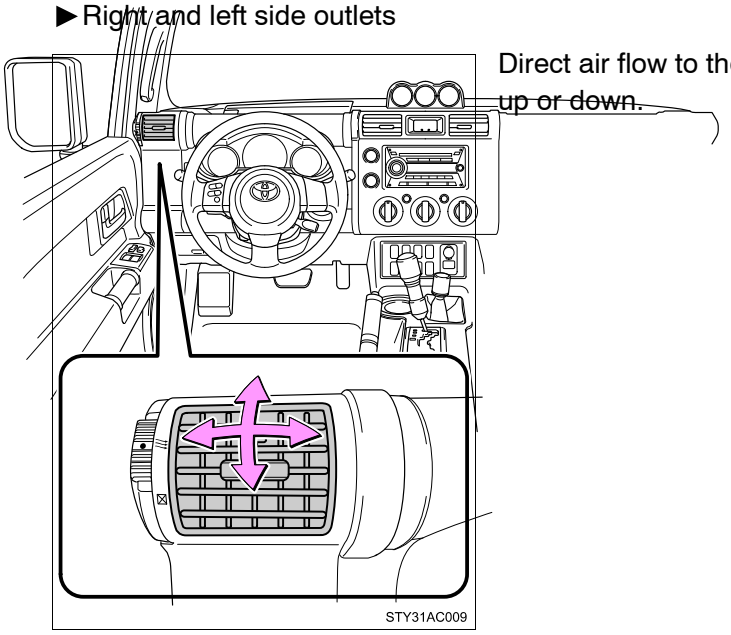

Direct air flow to the left or right, up or down.

Opening and closing the right and left side outlets

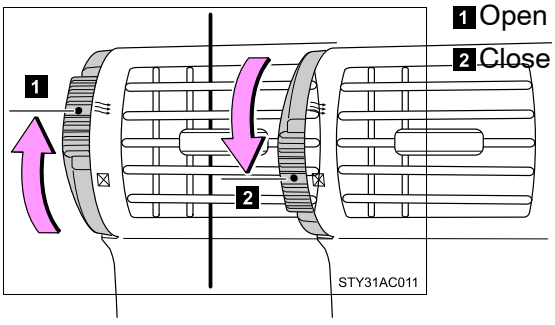

1 Open the vent.

2 Close the vent.

Using the system in recirculated air mode

The windows will fog up more easily if the recirculated air mode is used for an extended period.

When outside air temperature approaches 32°F (0°C)

The air conditioning system may not operate even when A/C is pressed.

When is selected for the air outlets used

For your driving comfort, air flowing to the feet may be warmer than air flowing to the upper body depending on the position of the temperature adjustment dial.

CAUTION

To prevent the windshield from fogging up

Do not set the air outlet selection dial to uring cool air operation in extremely humid weather. The difference between the temperature of the outside air and that of the windshield can cause the outer surface of the windshield to fog up, blocking your vision.

NOTICE

To prevent battery discharge

Do not leave the air conditioning system on longer than necessary when the engine is stopped.

Rear window defogger

Clear the rear window using the defogger.

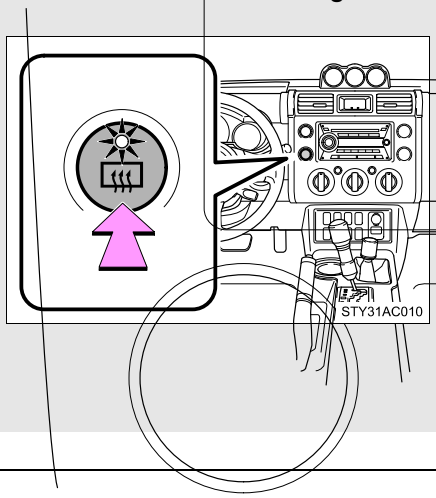

ON/OFF

Press the button to turn on the rear window defogger. The indicator light will come on. The defogger will automatically turn off after 15 to 240 minutes. The operation time changes according to the ambient temperature and vehicle speed. Pressing the button again also turns the defogger off.

■ **The rear window defogger can be operated when**

The engine switch is in the ON position.

⚠ NOTICE

■ **To prevent battery discharge**

Turn the rear window defogger off when the engine is off.

Audio system types

Type A: CD player with external CD changer controller and AM/FM radio
Type B: CD player with changer and AM/FM radio

►Type A

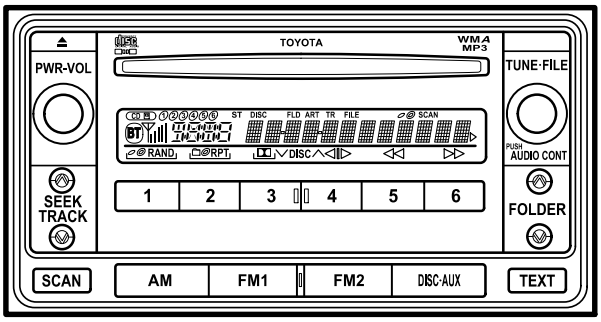

STY32AC001

►Type B

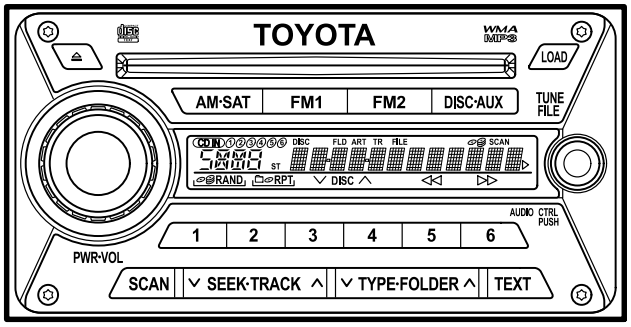

STY32AC002

Title	Page
Using the radio	P. 194
Using the CD player	P. 200
Playing back MP3 and WMA discs	P. 208
Optimal use of the audio system	P. 217
Operating the sub woofer	P. 220
Changing display color	P. 221
Using the AUX adapter	P. 222
Using the steering wheel audio switches	P. 224

Welcome function (type B only)

When you turn the engine switch to the ACC or ON position, “FJ CRUISER” will appear scrolling on the display. A nd then “FJammer” will appear for 6 seconds.

While this function is operating, the display is illuminated with full intensity and the instrument panel light control dial is disabled. However, you can turn off the display illumination by pushing the 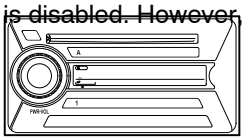

Using cellular phones

Interference may be heard through the audio system’s speakers if a cellular phone is being used inside or close to the vehicle while the audio system is operating.

CAUTION

For vehicles sold in U.S.A. and Canada

- Part 15 of the FCC Rules

  FCC Warning:
  Any unauthorized changes or modifications to this equipment will void the user's authority to operate this device.

- Laser products

  - Do not take this unit apart or attempt to make any changes yourself. This is an intricate unit that uses a laser pickup to retrieve information from the surface of compact discs. The laser is carefully shielded so that its rays remain inside the cabinet. Therefore, never try to disassemble the player or alter any of its parts since you may be exposed to laser rays and dangerous voltages.
  - This product utilizes a laser.
    Use of controls or adjustments or performance of procedures other than those specified herein may result in hazardous radiation exposure.

NOTICE

To prevent battery discharge

Do not leave the audio system on longer than necessary with the engine off.

To avoid damaging the audio system

Take care not to spill drinks or other fluids over the audio system.

▶Type A

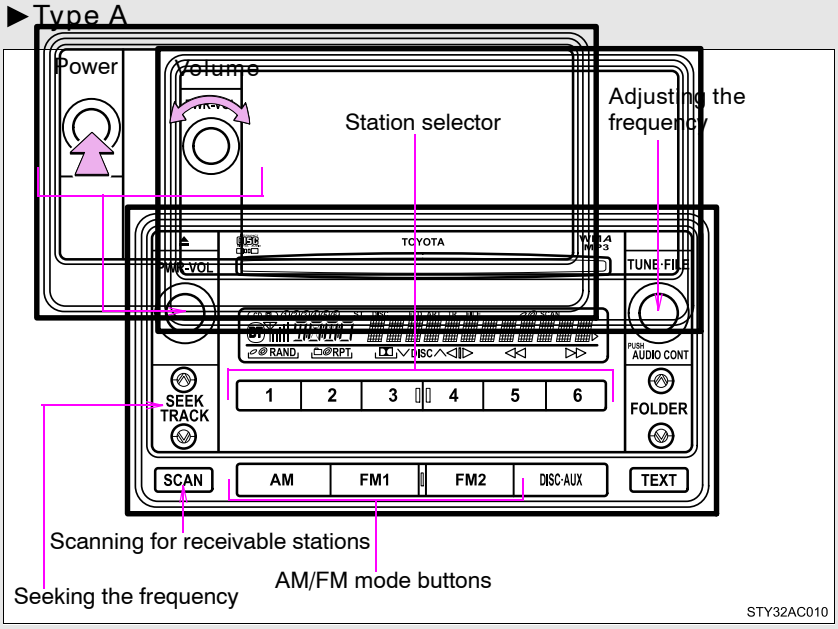
Power
Volume
Station selector
Adjusting the frequency
TOYOTA
PWR·VOL
TUNE·FILE
AUDIO CONT
SEEK TRACK
FOLDER
1
2
3
4
5
6
SCAN
AM
FM1
FM2
DISC·AUX
TEXT
Scanning for receivable stations
AM/FM mode buttons
Seeking the frequency
STY32AC010

▶Type B

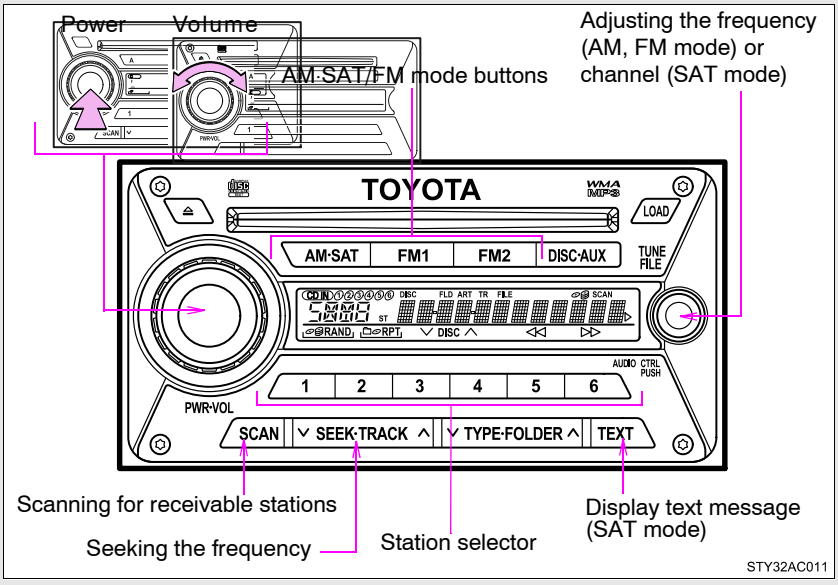
Power
Volume
AM·SAT/FM mode buttons
Adjusting the frequency (AM, FM mode) or channel (SAT mode)
TOYOTA
LOAD
AM·SAT
FM1
FM2
DISC·AUX
TUNE FILE
PWR·VOL
SCAN
SEEK·TRACK
TYPE·FOLDER
TEXT
Scanning for receivable stations
Seeking the frequency
Station selector
Display text message (SAT mode)
STY32AC011

Setting station presets (excluding XM® Satellite Radio)

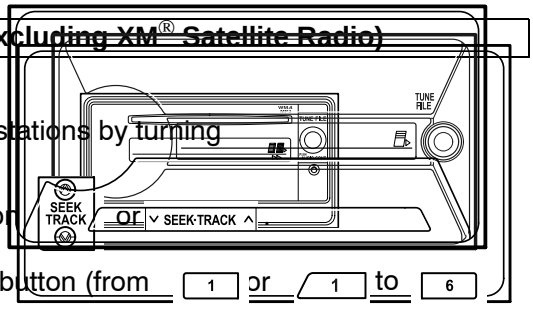

STEP 1 Search for desired stations by turning

pressing " " or " " or

STEP 2 Press and hold the button (from 1 or 1 to 6 6) that the station is to be set to until you hear a beep.

Scanning radio stations (excluding XM® Satellite Radio)

Scanning the preset radio stations

STEP 1 Press and hold SCAN or SCAN until you hear a beep.

Preset stations will be played for 5 seconds each.

STEP 2 When the desired station is reached, press the button once again.

Scanning all radio stations within range

STEP 1 Press SCAN SCAN

All stations with reception will be played for 5 seconds each.

STEP 2 When the desired station is reached, press the button once again.

XM® Satellite Radio (type B)

Receiving XM® Satellite Radio

STEP 1 Press AM·SAT and select the XM® band.

The display changes as follows each time AM·SAT is pressed.

AM SAT1 SAT2 SAT3

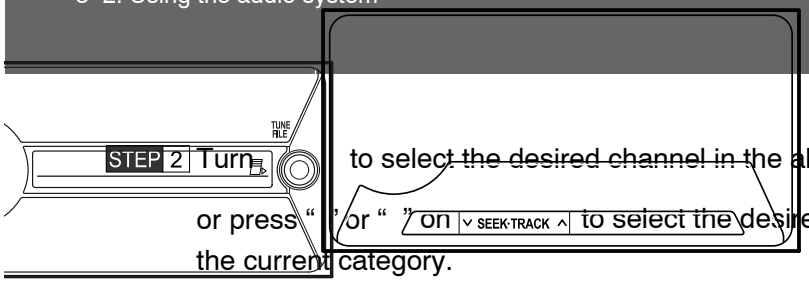

STEP 2 Turn to select the desired channel in the all categories or press " " or " " on SEEK·TRACK to select the desired channel in the current category.

■ **Setting XM® Satellite Radio channel presets**

Select the desired channel. Press and hold the button (from 1 to 6) that the channel is to be set to until you hear a beep.

■ **Changing the channel category**

Press " " or " " on the TYPE·FOLDER.

■ **Scanning XM® Satellite Radio channels**

● Scanning channels in the current category

STEP 1 Press SCAN

STEP 2 When the desired channel is reached, press SCAN again.

● Scanning preset channels

STEP 1 Press and hold SCAN until you hear a beep.

STEP 2 When the desired channel is reached, press SCAN again.

■ **Displaying text information**

Press TEXT

The display will show up to 10 characters.

The display changes as follows each time the button is pressed.

● CH NAME

● TITLE (SONG/PROGRAM TITLE)

● NAME (ARTIST NAME/FEATURE)

● CH NUMBER

■ **When the battery is disconnected**

Stations presets are erased.

■ **Reception sensitivity**

● Maintaining perfect radio reception at all times is difficult due to the continually changing position of the antenna, differences in signal strength and surrounding objects, such as trains, transmitters, etc.

● The radio antenna is mounted on the right−side front fender. The antenna can be removed from the base by turning it.

■ **XM® Satellite Radio**

An XM® Satellite Radio is a tuner designed exclusively to receive broadcasts provided under a separate subscription. Availability is limited to the 48 contiguous states and 10 Canadian provinces.

● XM® subscriptions
For detailed information about XM® Satellite Radio or to subscribe:

U.S.A.—
Visit on the web at www.xmradio.com or call 1−800−967−2346.

Canada—
Visit on the web at www.xmradio.ca or call 1−877−438−9677.

● Radio ID
You will need the radio ID when activating XM® service or reporting a problem. Select “CH000” using 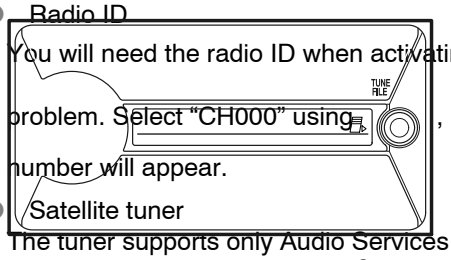

, and the receiver’s 8−character ID number will appear.

● Satellite tuner
The tuner supports only Audio Services (Music and Talk) and the accompanying Text Information of XM® Satellite Radio.

If the satellite radio does not operate normally

If a problem occurs with the XM ® tuner, a message will appear on the display. Refer to the table below to identify the problem, and take the suggested corrective action.

ANTENNA	The XM® antenna is not connected. Check whether the XM® antenna cable is attached securely.
	There is a short–circuit in the antenna or the surrounding antenna cable. See a Toyota certified dealer.
UPDATING	You have not subscribed to the XM® Satellite Radio. The radio is being updated with the latest encryption code. Contact the XM® Satellite Radio for subscription information. When a contract is canceled, you can choose the “CH000” and all free–to–air channels.
	The premium channel you selected is not authorized. Wait for about 2 seconds until the radio returns to the previous channel or “CH001”. If it does not change automatically, select another channel. If you want to listen to the premium channel, contact the XM® Satellite Radio.
NO SIGNAL	The XM® signal is too weak at the current location. Wait until your vehicle reaches a location with a stronger signal.
LOADING	The unit is acquiring audio or program information. Wait until the unit has received the information.
OFF AIR	The channel you selected is not broadcasting any programming. Select another channel.
–––––	There is no song/program title or artist name/feature associated with the channel at that time. No action needed.

---	The channel you selected is no longer available. Wait for about 2 seconds until the radio returns to the previous channel or “CH001”. If it does not change automatically, select another channel.

Contact the XM® Listener Care Center at 1–800–967–2346 (U.S.A.) or 1–877–438–9677 (Canada).

Certifications for the radio tuner

This equipment has been tested and found to comply with the limits for a class B digital device, pursuant to Part 15 of the FCC Rules. These limits are designed to provide reasonable protection against harmful interference in a residential installation. This equipment generates, uses and can radiate radio frequency energy and, if not installed and used in accordance with the instructions, may cause harmful interference to radio communications. However, there is no guarantee that interference will not occur in a particular installation.

If this equipment does cause harmful interference to radio or television reception, which can be determined by turning the equipment off and on, the user is encouraged to try to correct the interference by trying one or more of the following:

- Reorienting or relocate the receiving antenna.
- Increasing the separation between the equipment and receiver.
- Connecting the equipment into an outlet on a circuit different from that to which the receiver is connected.
- Consulting the dealer or an experienced radio/TV technician for help.

NOTICE

To prevent damage, remove the antenna in the following cases.

- The antenna will touch the ceiling of a garage.
- A cover will be put on the vehicle.

▶Type A

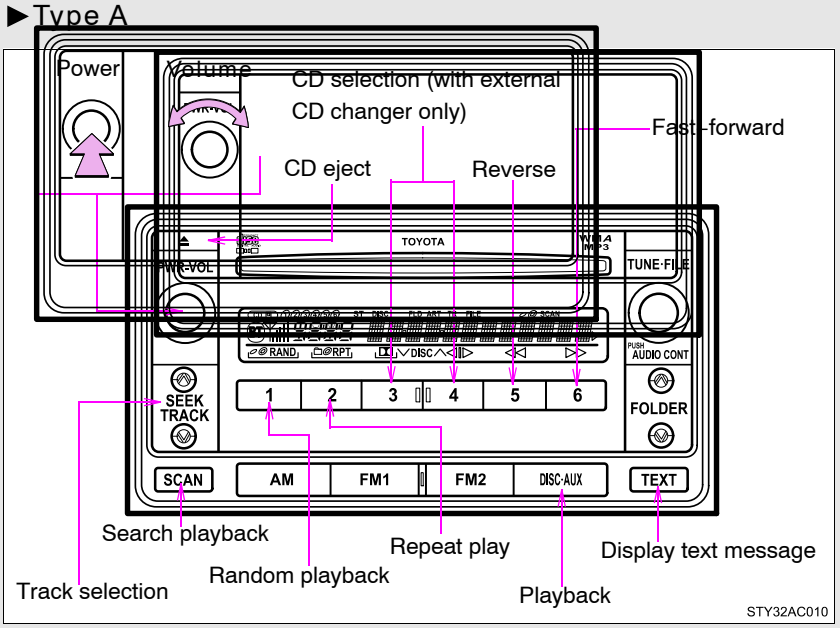
Power
Volume
CD selection (with external CD changer only)
Fast–forward
CD eject
Reverse
TOYOTA
PWR·VOL
TUNE·FILE
RAND
RPT
DISC
AUDIO CONT
SEEK TRACK
FOLDER
1
2
3
4
5
6
SCAN
AM
FM1
FM2
DISC·AUX
TEXT
Search playback
Repeat play
Display text message
Random playback
Track selection
Playback
STY32AC010

▶Type B

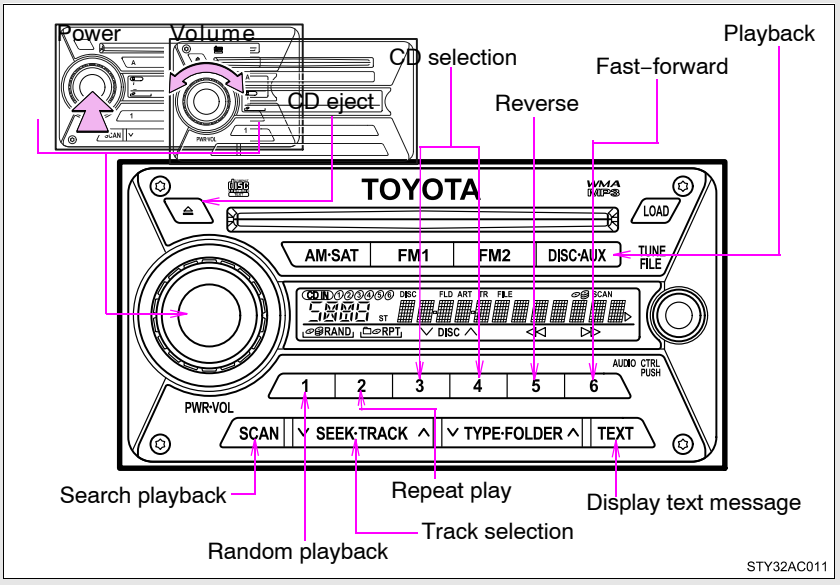
Power
Volume
CD selection
Playback
Fast–forward
CD eject
Reverse
TOYOTA
LOAD
AM·SAT
FM1
FM2
DISC·AUX
TUNE FILE
RAND
RPT
DISC
AUDIO CTRL PUSH
1
2
3
4
5
6
PWR·VOL
SCAN
SEEK·TRACK
TYPE·FOLDER
TEXT
Search playback
Repeat play
Display text message
Track selection
Random playback
STY32AC011

Loading CDs

Loading a CD (type A)

Insert a CD.

Loading a CD (type B)

STEP 1 Press LOAD

"WAIT" is shown on the display.

STEP 2 Insert a CD when the indicator on the slot turns from amber to green.

The display changes from "WAIT" to "LOAD".

Loading multiple CDs (type B only)

STEP 1 Press and hold LOAD until you hear a beep.

"WAIT" is shown on the display.

STEP 2 Insert a CD when the indicator on the slot turns from amber to green.

The display changes from "WAIT" to "LOAD".

The indicator on the slot turns to amber when the CD is inserted.

STEP 3 Insert the next CD when the indicator on the slot turns from amber to green again.

Repeat the procedure for the remaining CDs.

To stop the operation, press DISC·AUX .

Ejecting CDs

Ejecting a CD (type A)

Press ⏏ and remove the CD.

Ejecting a CD (type B)

STEP 1 To select the CD to be ejected, press 3 ( ) or 4 ( ).

The number of the CD selected is shown on the display.

STEP 2 Press ⏏ and remove the CD.

Ejecting all the CDs (type B only)

Press and hold ⏏ until you hear a beep, and then remove the CDs.

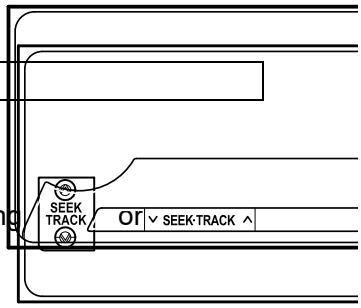

Selecting and scanning a track

Selecting a track

Press " " to move up or " " to move down using SEEK TRACK or SEEK·TRACK until the desired track number is displayed.

Scanning tracks

STEP 1 Press SCAN or SCAN

The first 10 seconds of each track will be played.

STEP 2 Press the switch again when the desired track is reached.

Fast–forwarding and reversing tracks

To fast–forward or reverse.

Type A: Press and hold 6 (▶▶) or 5 (◀◀).

Type B: Press and hold 6 (▶▶) or 5 (◀◀).

Selecting a CD (with CD changer only)

Selecting the desired CD

Type A: Press 3 ( ) or 4 ( ).

Type B: Press 3 ( ) or 4 ( ).

Selecting loaded CDs

STEP 1 Press and hold SCAN or SCAN until you hear a beep.

The first 10 seconds of the first track on each CD will be played.

STEP 2 Press the switch again when the desired CD is reached.

Repeat play

Repeating a track

Press 2 (RPT) or 2 (RPT).

Repeating all of the tracks on a CD (with CD changer only)

Press and hold 2 (RPT) or 2 (RPT) until you hear a beep.

Random playback

Current CD

Press 1 (RAND) or 1 (RAND).

Tracks are played in a random order until the button is pressed once more.

All CDs (with CD changer only)

Press and hold 1 (RAND) or 1 (RAND) until you hear a beep.

Tracks on all loaded CDs are played in a random order until the button is pressed once more.

Switching the display

Press TEXT TEXT

Each time the switch is pressed, the display changes in the order of Track no./Elapsed time CD title Track name.

Display

Up to 12 characters can be displayed at a time.

If there are 13 characters or more, pressing and holding TEXT or TEXT for 1 second or more will display the remaining characters.
A maximum of 24 characters can be displayed.

If TEXT TEXT is pressed for 1 second or more again or has not been pressed for 6 seconds or more, the display will return to the first 12 characters.

Depending on the contents recorded, the characters may not be displayed properly or may not be displayed at all.

Canceling random playback

Press 1 (RAND) or 1 (RAND) again.

Canceling repeat play

Press 2 (RPT) or 2 (RPT) again.

Error messages

Refer to the following table and take the appropriate measures. If the problem is not rectified, take the vehicle to your Toyota dealer.

Message	Cause	Correction Procedures
ERROR 1	• The disc may be dirty or damaged • The disc may be inserted upside down	• Clean the disc • Insert the disc correctly
ERROR 3	There is a problem within the system	Eject the disc or magazine
ERROR 4	Over–current	Ask your Toyota dealer
WAIT	Operation is stopped due to a high temperature inside the player	Eject the disc and allow the player to cool down
CD OPEN	The external CD changer lid is open	Close the lid

Message	Cause	Correction Procedures
NO DISC	There is no disc in the CD changer	Insert a disc

Discs that can be used

Discs with the marks shown below can be used.
Playback may not be possible depending on recording format or disc features, or due to scratches, dirt or deterioration.

CDs with copy−protect features may not be used.

CD player protection feature

To protect the internal components, playback is automatically stopped when a problem is detected while the CD player is being used.

If CDs are left inside the CD pla yer or in the ejected position for extended periods

CDs may be damaged and may not play properly.

Lens cleaners

Do not use lens cleaners. Doing so may damage the CD player.

NOTICE

CDs and adapters that cannot be used

Do not use the following types of CDs or 3 in. (8 cm) CD adapters or Dual Disc.
Doing so may damage the CD player and/or the CD insert/eject function.

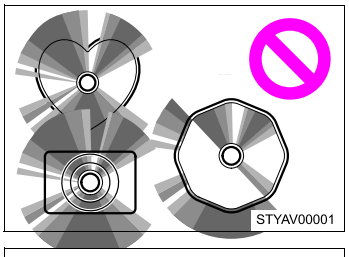

- CDs that have a diameter that is not 4.7 in. (12 cm)

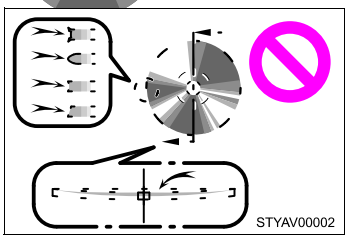

- Low–quality and deformed CDs

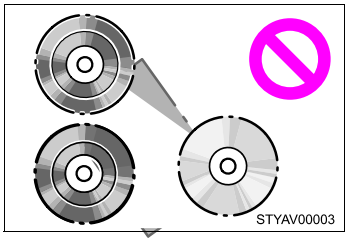

- CDs with a transparent or translucent recording area

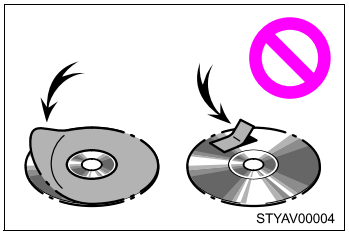

- CDs that have had tape, stickers or CD–R labels attached to them, or that have had the label peeled off

NOTICE

CD player precautions

Failure to follow the precautions below may result in serious damage to the CDs or the player itself.

- Do not insert anything other than CDs into the CD slot.
- Do not apply oil to the CD player.
- Store CDs away from direct sunlight.
- Never try to disassemble any part of the CD player.

- Do not insert more than one CD at a time

Playing back MP3 and WMA discs

▶Type A

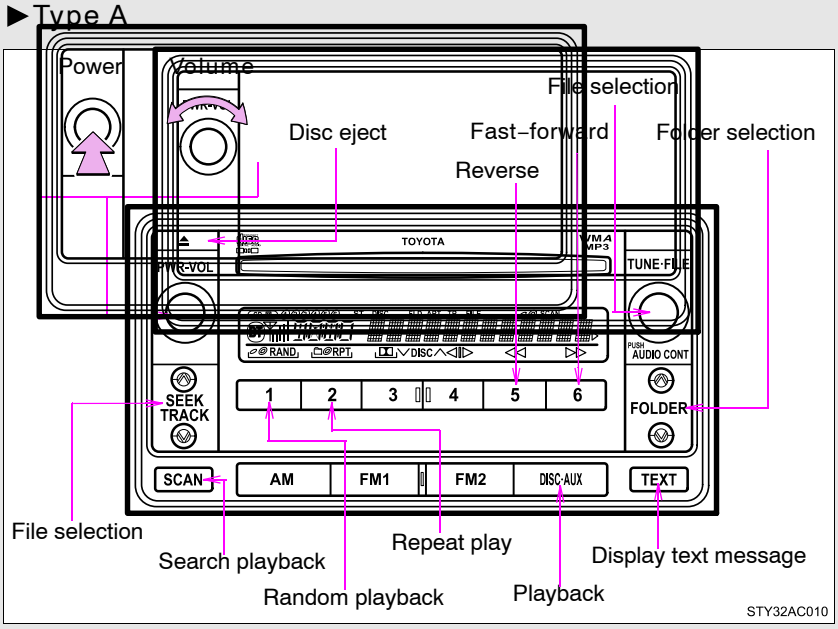

▶Type B

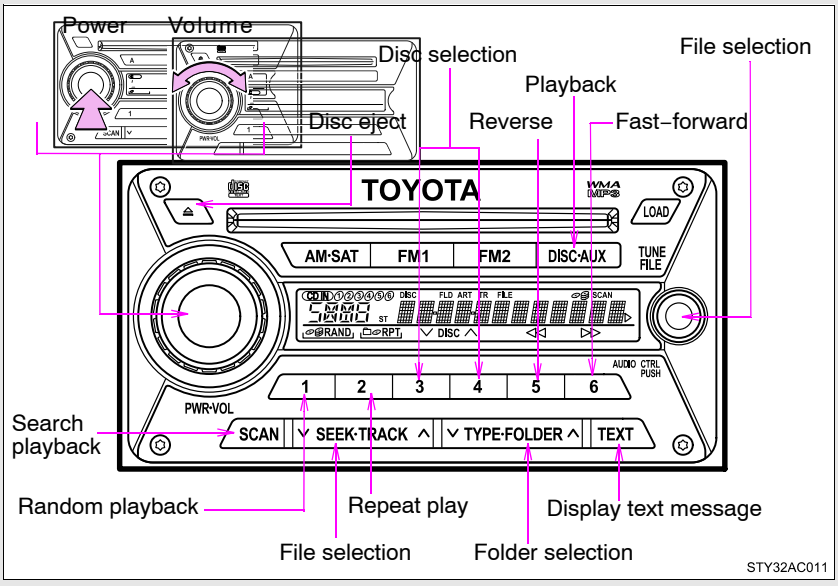

Loading MP3 and WMA discs

Loading a disc (type A)

Insert a disc.

Loading a disc (type B)

STEP 1 Press LOAD

"WAIT" is shown on the display.

STEP 2 Insert a disc when the indicator on the slot turns from amber to green.

The display changes from "WAIT" to "LOAD".

Loading multiple discs (type B only)

STEP 1 Press and hold LOAD until you hear a beep.

"WAIT" is shown on the display.

STEP 2 Insert a disc when the indicator on the slot turns from amber to green.

The display changes from "WAIT" to "LOAD".

The indicator on the slot turns to amber when the disc is inserted.

STEP 3 Insert the next disc when the indicator on the slot turns from amber to green again.

Repeat the procedure for the remaining discs.

To stop the operation, press DISC·AUX .

Ejecting MP3 and WMA discs

Ejecting a disc (type A)

Press ⏏ and remove the disc.

Ejecting a disc (type B)

STEP 1 To select the disc to be ejected, press 3 ( ) or 4 ( ).

The number of the disc selected is shown on the display.

STEP 2 Press ⏏ and remove the disc.

Ejecting all the discs (type B only)

Press and hold ⏏ until you hear a beep, and then remove the discs.

Selecting a disc (type B only)

Selecting the desired disc

Press [3] or [4] ( ).

Selecting a folder

Selecting folders one at a time

To select the desired folder, press “ ” or “ ” on FOLDER or ∨ TYPE·FOLDER ∧ .

Selecting the desired folder by cueing the first file of each folder

Press and hold SCAN or SCAN until you hear a beep.

The first 10 seconds of the first file in the each folder will be played.

When the desired folder is reached, press the switch once again.

Returning to the first folder

Press and hold “ ” on FOLDER or ∨ TYPE·FOLDER ∧ until you hear a beep.

Selecting and scanning files

Selecting one file at a time

To select the desired file, turn the or or press “ ” or “ ” on SEEK TRACK or ∨ SEEK·TRACK ∧

Selecting the desired file by cueing the files in the folder

Press SCAN SCAN

The first 10 seconds of all files in the folder will be played.

When the desired file is reached, press the switch once again.

Fast–forwarding and reversing files

To fast–forward or reverse.

Type A: Press and hold 6 (▶▶) or 5 (◀◀).

Type B: Press and hold 6 (▶▶) or 5 (◀◀).

Repeat play

Repeating a file

Press 2 (RPT) or 2 (RPT).

Repeating all of the files in the folder

Press and hold 2 (RPT) or 2 (RPT) until you hear a beep.

Random playback

Playing files from a particular folder in random order

Press 1 (RAND) or 1 (RAND).

Playing all of the files on a disc in random order

Press and hold 1 (RAND) or 1 (RAND) until you hear a beep.

Switching the display

Press TEXT TEXT

Each time the switch is pressed, the display changes in the order of Folder no./File no./Elapsed time Folder name File name Album title (MP3 only) Track title Artist name.

Display

Up to 12 characters can be displayed at a time.

If there are 13 characters or more, pressing and holding TEXT or TEXT for 1 second or more will display the remaining characters.
A maximum of 24 characters can be displayed.

If TEXT or TEXT is pressed for 1 second or more again or has not been pressed for 6 seconds or more, the display will return to the first 12 characters.

Depending on the contents recorded, the characters may not be displayed properly or may not be displayed at all.

Canceling random playback

Press 1 (RAND) or 1 (RAND) again.

Canceling repeat play

Press 2 (RPT) or 2 (RPT) again.

Error messages

Refer to the following table and take the appropriate measures. If the problem is not rectified, take the vehicle to your Toyota dealer.

Message	Cause	Correction Procedures
ERROR 1	• The disc may be dirty or damaged • The disc may be inserted upside down	• Clean the disc • Insert the disc correctly
ERROR 3	There is a problem within the system	Eject the disc or magazine
ERROR 4	Over–current	Ask your Toyota dealer
WAIT	Operation is stopped due to a high temperature inside the player	Eject the disc and allow the player to cool down

Message	Cause	Correction Procedures
NO MUSIC	This indicates that no playable data is included in the disc	Eject the disc

Discs that can be used

Discs with the marks shown below can be used.
Playback may not be possible depending on recording format or disc features, or due to scratches, dirt or deterioration.

MP3 and WMA player protection feature

To protect the internal components, playback is automatically stopped when a problem is detected while the MP3 and WMA player is being used.

If discs are left inside the MP3 and WMA player or in the ejected position for extended periods

Discs may be damaged and may not play properly.

Lens cleaners

Do not use lens cleaners. Doing so may damage the MP3 and WMA player.

MP3 and WMA files

MP3 (MPEG Audio LAYER3) is a standard audio compression format.

Files can be compressed to approximately 1/10 of their original size by using MP3 compression.

WMA (Windows Media TM Audio) is a Microsoft audio compression format.

This format compresses audio data to a size smaller than that of the MP3 format.

There is a limit to the MP3 and WMA file standards and to the media/formats recorded by them that can be used.

● MP3 file compatibility

- Compatible standards
  MP3 (MPEG1 LAYER3, MPEG2 LSF LAYER3)

- Compatible sampling frequencies
  MPEG1 LAYER3: 32, 44.1, 48 (kHz)
  MPEG2 LSF LAYER3: 16, 22.05, 24 (kHz)
- Compatible bit rates (compatible with VBR)
  MPEG1 LAYER3: 64, 80, 96, 112, 128, 160, 192, 224, 256, 320 (kbps)
- MPEG2 LSF LAYER3: 64, 80, 96, 112, 128, 144, 160 (kbps)
- Compatible channel modes: stereo, joint stereo, dual channel and monaural

● WMA file compatibility

- Compatible standards
  WMA Ver. 7, 8, 9
- Compatible sampling frequencies
  32, 44.1, 48 (kHz)
- Compatible bit rates (only compatible with 2−channel playback)
  Ver. 7, 8: CBR 48, 64, 80, 96, 128, 160, 192 (kbps)
  Ver. 9: CBR 48, 64, 80, 96, 128, 160, 192, 256, 320 (kbps)

● Compatible media

Media that can be used for MP3 and WMA playback are CD−Rs and CD−RWs.

Playback in some instances may not be possible, depending on the status of the CD−R or CD−RW. Playback may not be possible or the audio may jump if the disc is scratched or marked with fingerprints.

● Compatible disc formats

The following disc formats can be used.

- Disc formats: CD−ROM Mode 1 and Mode 2
  CD−ROM XA Mode 2, Form 1 and Form 2
- File formats: ISO9660 Level 1, Level 2, (Romeo, Joliet)
  MP3 and WMA files written in any format other than those listed above may not play correctly, and their file names and folder names may not be displayed correctly.

Items related to standards and limitations are as follows.

- Maximum directory hierarchy: 8 levels
- Maximum length of folder names/file names: 32 characters
- Maximum number of folders: 192 (including the root)
- Maximum number of files per disc: 255

- File names

The only files that can be recogniz ed as MP3/WMA and played are those with the extension .mp3 or .wma.

- Multi−sessions

As the audio system is compatible with multi−sessions, it is possible to play discs that contain MP3 and WMA files. However, only the first session can be played.

- ID3 and WMA tags

ID3 tags can be added to MP3 files, making it possible to record the track title and artist name, etc.

The system is compatible with ID3 Ver. 1.0, 1.1, and Ver. 2.2, 2.3 ID3 tags. (The number of characters is based on ID3 Ver. 1.0 and 1.1.)

WMA tags can be added to WMA files, making it possible to record the track title and artist name in the same way as with ID3 tags.

- MP3 and WMA playback

When a disc containing MP3 or WMA files is inserted, all files on the disc are first checked. Once the file check is finished, the first MP3 or WMA file is played. To make the file check finish more quickly, we recommend you do not write in any files other than MP3 or WMA files or create any unnec−essary folders.

If the discs contain a mixture of music data and MP3 or WMA format data, only music data can be played.

- Extensions

If the file extensions .mp3 and .wma are used for files other than MP3 and WMA files, they will be mistakenly recognized and played as MP3 and WMA files. This may result in large amounts of interference and damage to the speakers.

- Playback

  - To play MP3 file with steady sound quality, we recommend a fixed bit rate of 128 kbps and a sampling frequency of 44.1 kHz.
  - CD−R or CD−RW playback may not be possible in some instances, depending on the characteristics of the disc.

- There is a wide variety of freeware and other encoding software for MP3 and WMA files on the market, and depending on the status of the encoding and the file format, poor sound quality or noise at the start of playback may result. In some cases, playback may not be possible at all.
- When files other than MP3 or WMA files are recorded on a disc, it may take more time to recognize the disc and in some cases, playback may not be possible at all.
- Microsoft, Windows, and Windows Media are the registered trade–marks of Microsoft Corporation in the U.S. and other countries.

NOTICE

- **CDs and adapters that cannot be used (P. 206)**
- **CD player precautions (P. 207)**

Optimal use of the audio system

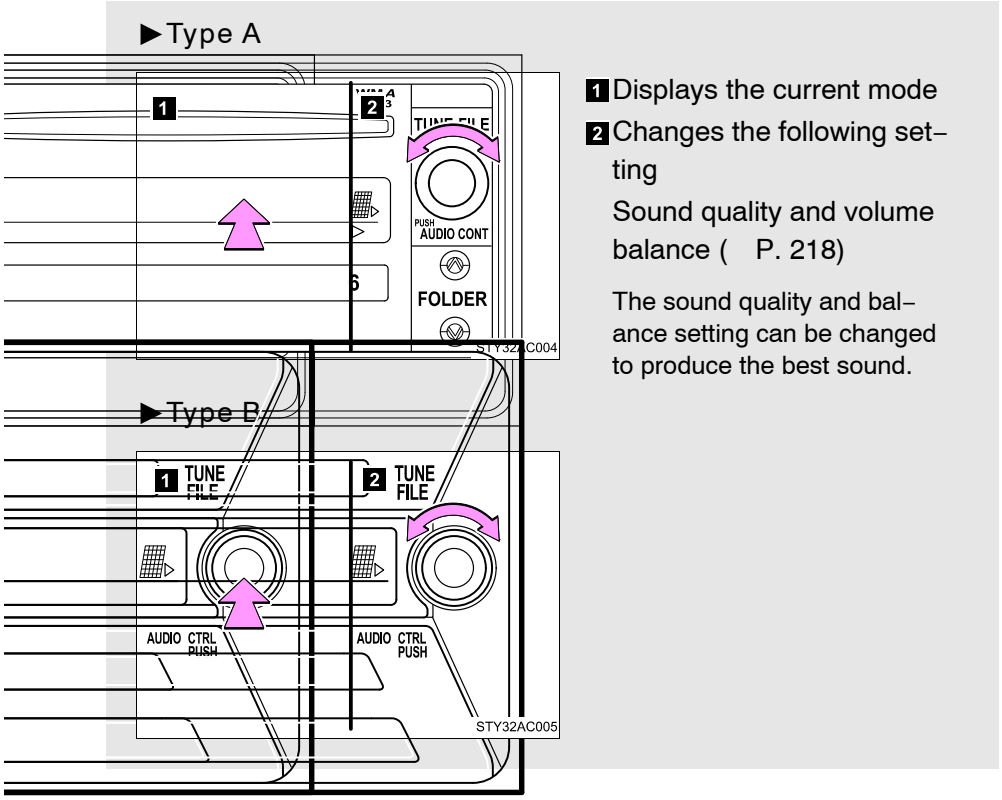

1 Displays the current mode

2 Changes the following setting

Sound quality and volume balance (P. 218)

The sound quality and balance setting can be changed to produce the best sound.

Using the AUDIO CONTROL function

■ Changing sound quality modes

Pressing or selects the mode to be changed in the following order.

BAS TRE FAD BAL

Adjusting sound quality

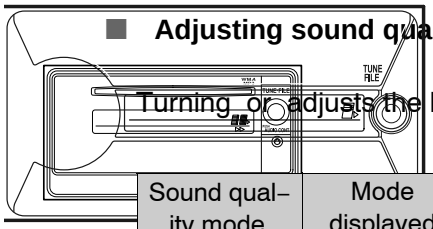

Turning or adjusts the level.

Sound quality mode	Mode displayed	Level	Turn to the left	Turn to the right
Bass	BAS	–5 to 5	Low	High
Treble	TRE	–5 to 5		
Front/rear volume balance	FAD	F7 to R7	Shifts to rear	Shifts to front
Left/right volume balance	BAL	L7 to R7	Shifts to left	Shifts to right

Trademark owned by SRS Labs, Inc.

The audio systems utilize SRS FOCUS and SRS TruBass audio enhancement technologies, under license from SRS Labs, Inc., in all mode except AM radio mode.

FOCUS, TruBass, SRS and symbols are trademarks of SRS Labs, Inc.
FOCUS and TruBass technologies are incorporated under license from SRS Labs, Inc.

Trademark owned by New Transducers Limited

This vehicle incorporates NXT flat panel speaker technology by New Transducers Limited, UK. a registered trademarks of New Transducers Limited.

Operating the sub woofer (if equipped)

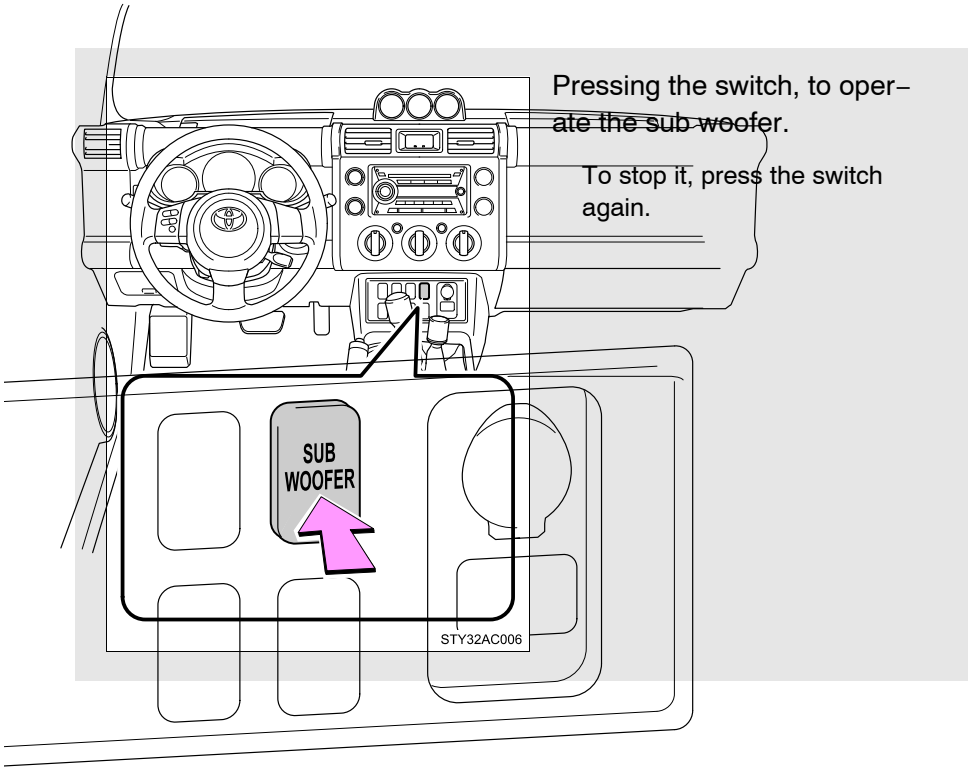

Changing display color (type B only)

Display color can be changed by following the procedure below.

STEP 1 Select the function of which you want to change the display color.

STEP 2 Turn the audio system off by pressing

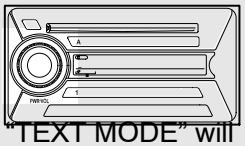

STEP 3 Push TEXT for more than 5 seconds. "TEXT MODE" will appear on the display, and then the system is turned off.

STEP 4 Turn the system on.

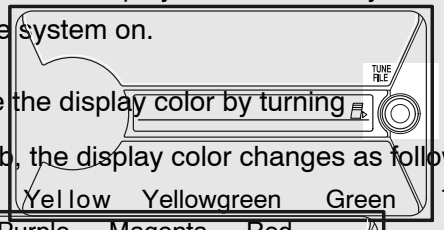

STEP 5 Change the display color by turning When you turn the knob, the display color changes as follows:

Amber Yellow Yellowgreen Green Turquoiseblue Blue Purple Magenta Red

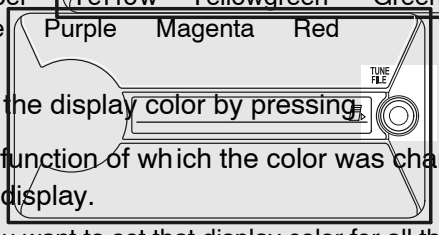

STEP 6 Set the display color by pressing briefly. The name of the function of which the color was changed will appear on the display.

If you want to set that display color for all the function displays, press the knob for 2 seconds. "ALL CHANGE" will appear on the display.

To continue to change the display color of other functions, select the function of which you want to change the display color, and repeat steps 5 to 6.

STEP 7 Turn the system off by pressing

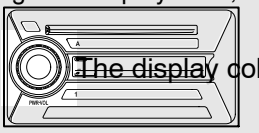

The display color change function ends.

Using the AUX adapter

This adapter can be used to connect a portable audio device and listen to it through the vehicle's speakers.

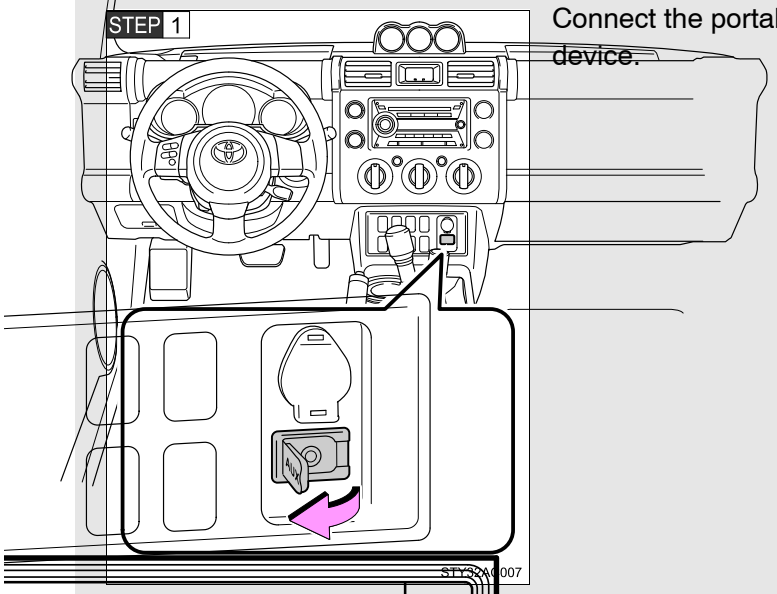

Connect the portable audio device.

►Type A

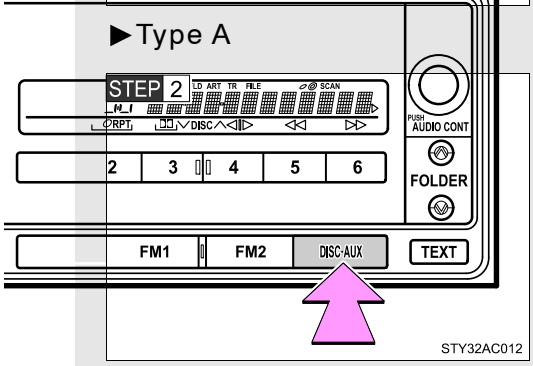

Press DISC-AUX

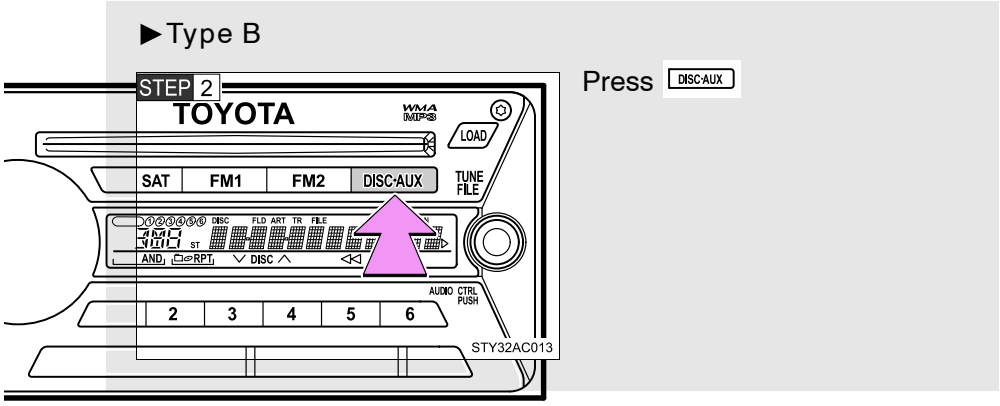

■ **Operating portable audio devices connected to the audio system**

The volume can be adjusted using the vehicle's audio controls. All other adjustments must be made on the portable audio device itself.

■ **When using a portable audio device connected to the power outlet or cigarette lighter**

Noise may occur during playback. Use the power source of the portable audio device.

Using the steering wheel audio switches (if equipped)

Some audio features can be controlled using the switches on the steering wheel.

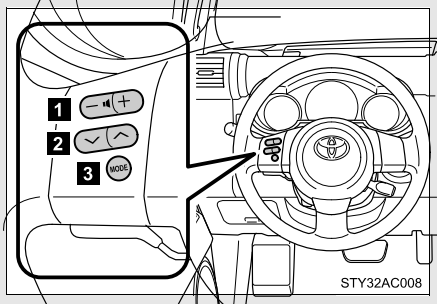

1 Volume

2 Radio: Select radio stations
CD: Select tracks, files (MP3 and WMA) and discs

3 Power on, select audio source

Turning on the power

Press MODE when the audio system is turned OFF.

The audio system can be turned off by holding the switch down until the system turns off.

Changing the audio source

Press MODE when the audio system is turned ON. The audio source changes as follows each time MODE is pressed.

CD player without changer:

FM1 FM2 CD AUX AM

CD player with changer:

FM1 FM2 CD changer AUX AM SAT1 SAT2 SAT3

Adjusting the volume

Press “+” on – + to increase the volume and “–” to decrease the volume.

Press and hold “+” or “–” on – + to continue increasing or decreasing the volume.

Selecting a radio station

STEP 1 Press (MODE) to select the radio mode.

STEP 2 Press “ ” or “ ” on (∨/∧) to select a preset station.

To scan for receivable stations, press and hold the switch until you hear a beep.

Selecting a track/file

STEP 1 Press (MODE) to select the CD mode.

STEP 2 Press “ ” or “ ” on (∨/∧) to select the desired track/file.

Selecting a disc in the CD player (CD player with changer only)

STEP 1 Press (MODE) to select the CD mode.

STEP 2 Press and hold “ ” or “ ” on (∨/∧) until you want to listen to is set.

CAUTION

■ **To reduce the risk of an accident**

Exercise care when operating the audio switches on the steering wheel.

Interior lights list

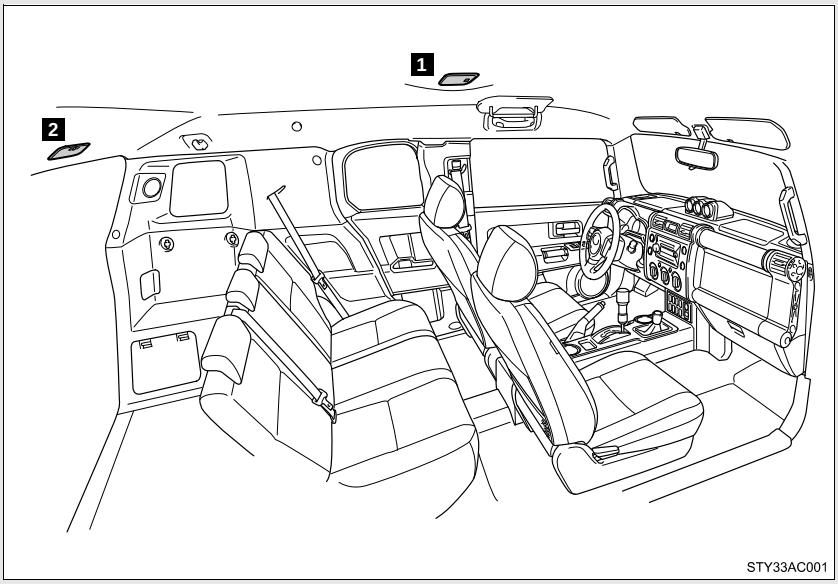

1 Front interior light (P. 227)

2 Rear interior light (P. 227)

Illuminated entry system

When the interior light switch is in the DOOR position, the interior light automatically turns on/off according to whether the doors are locked/unlocked and whether the doors are open/closed and the engine switch position.

To prevent the battery from being discharged

If the interior light remains on when the door is not fully closed and the interior light switch is in the DOOR position, the light will go off automatically after 30 minutes.

Customization that can be configured at Toyota dealer

Settings (e.g. The time elapsed before lights turn off) can be changed. (Customizable features P. 386)

Interior lights

▶ Front

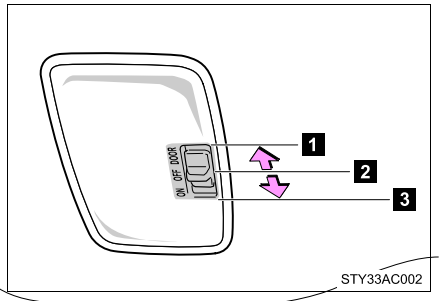

1 DOOR position
2 OFF
3 ON

▶ Rear

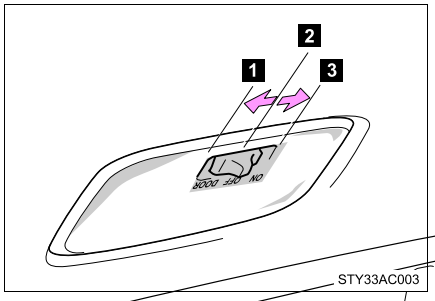

1 DOOR position
2 OFF
3 ON

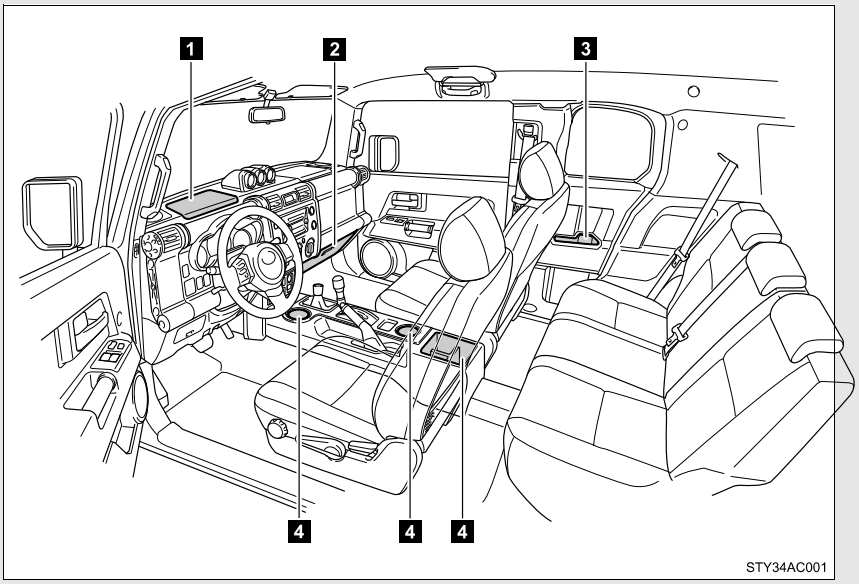

1 Auxiliary box
2 Glove box
3 Bottle holders
4 Cup holders

Glove box

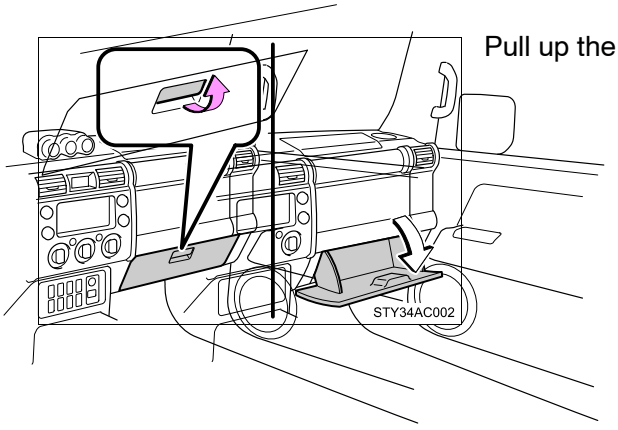

Pull up the lever.

CAUTION

Caution while driving

Keep the glove box closed.
Injuries may result in the event of an accident or sudden braking.

Cup holders (front)

▶Vehicles with an automatic transmission

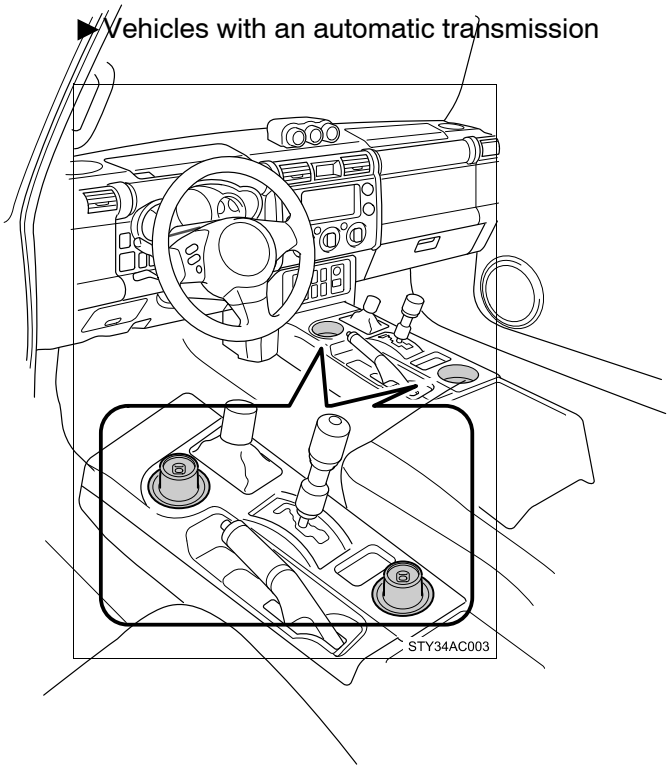

▶Vehicles with a manual transmission

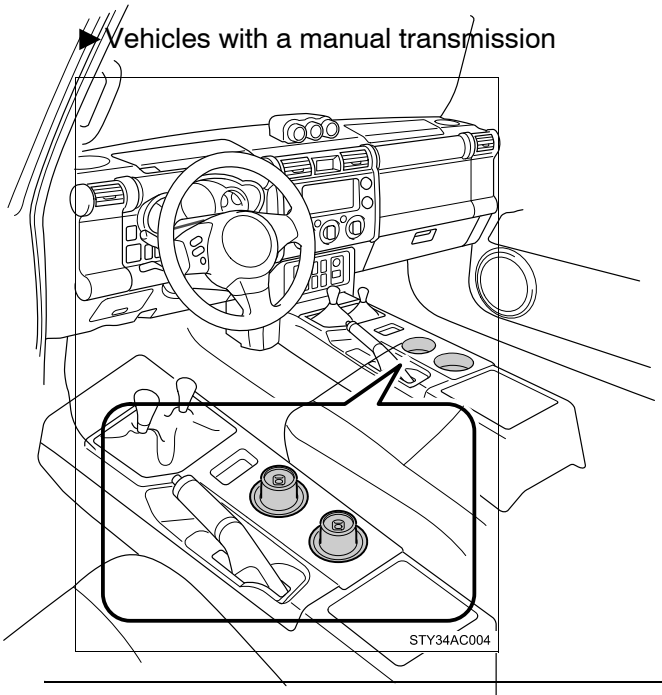

■ **Holding large cups**

▶Vehicles with an automatic transmission

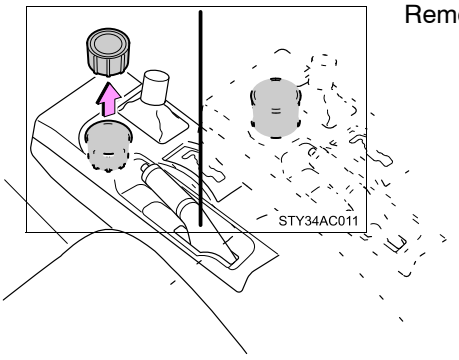

Remove the adapter.

▶Vehicles with a manual transmission

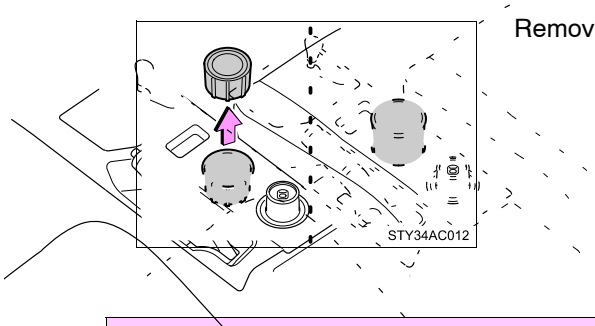

Remove the adapter.

CAUTION

■ **Items unsuitable for the cup holder**

Do not place anything other than cups or aluminum cans in the cup holders. Other items may be thrown out of the holders in the event of an accident or sudden braking and cause injury. If possible, cover hot drinks to prevent burns.

Cup holders (rear)

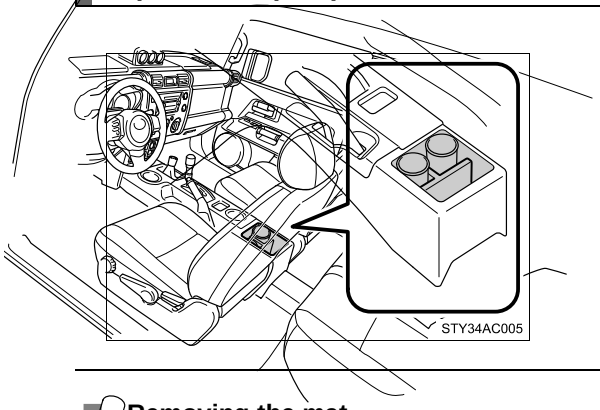

Removing the mat

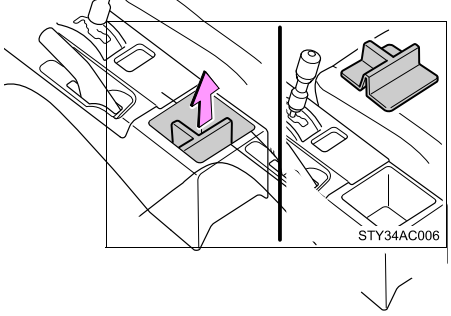

Pull up.

CAUTION

Items unsuitable for the cup holder

Do not place anything other than cups or aluminum cans in the cup holders. Other items may be thrown out of the holders in the event of an accident or sudden braking and cause injury. If possible, cover hot drinks to prevent burns.

Bottle holders

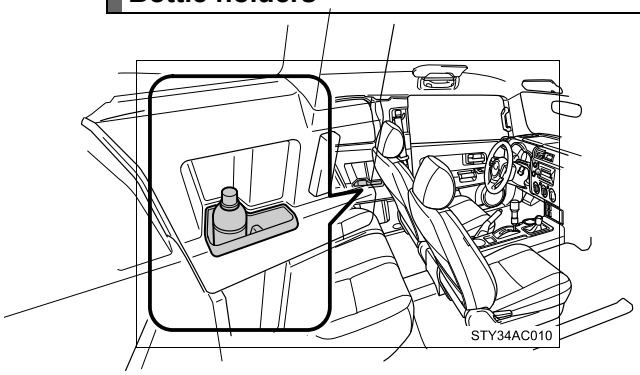

Bottle holders

Depending on their size or shape, some bottles may not fit in the holders.

NOTICE

Items that should not be stowed in the bottle holders

Put the cap on before stowing a bottle. Do not place open bottles in the bottle holders, or glasses and paper cups containing liquid. The contents may spill and glasses may break.

Auxiliary box

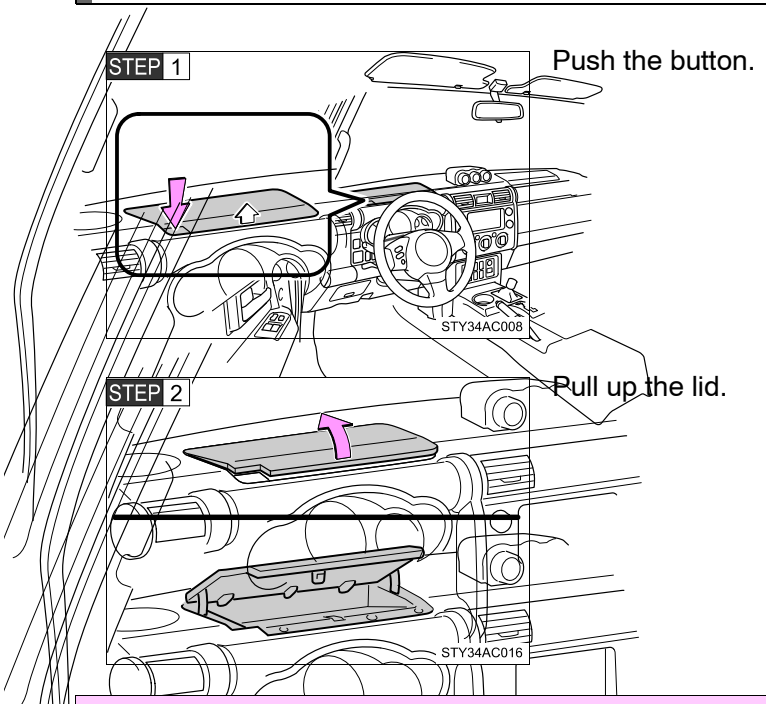

CAUTION

■ **Items that should not be left in the auxiliary box**

Do not leave anything flammable or deformable, such as a lighter or glasses in the box.
If the interior of the vehicle becomes hot, flammable objects such as lighters may explode, and objects that can be damaged by heat, such as glasses or cellular phones may warp or crack.

■ **Caution while driving**

Do not leave the auxiliary box open while driving.
Items may fall out and cause death or serious injury in case of an accident or sudden stop.

Sun visors

▶ Front

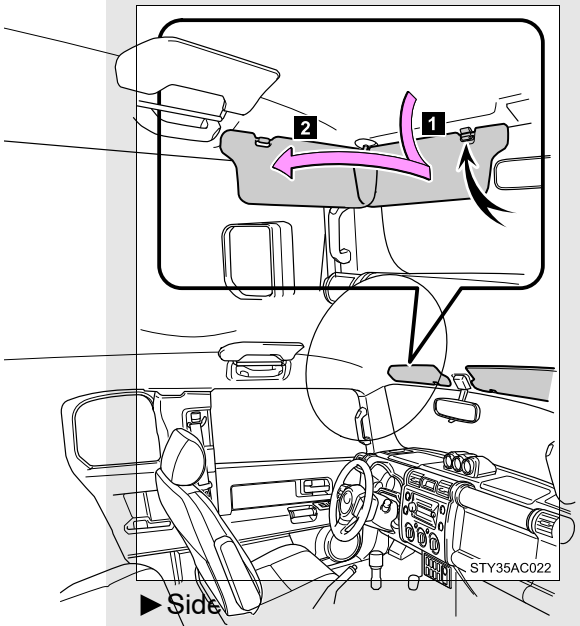

1 Forward position:
Flip down.

2 Side position:
Flip down, unhook, and swing to the side.

▶ Side

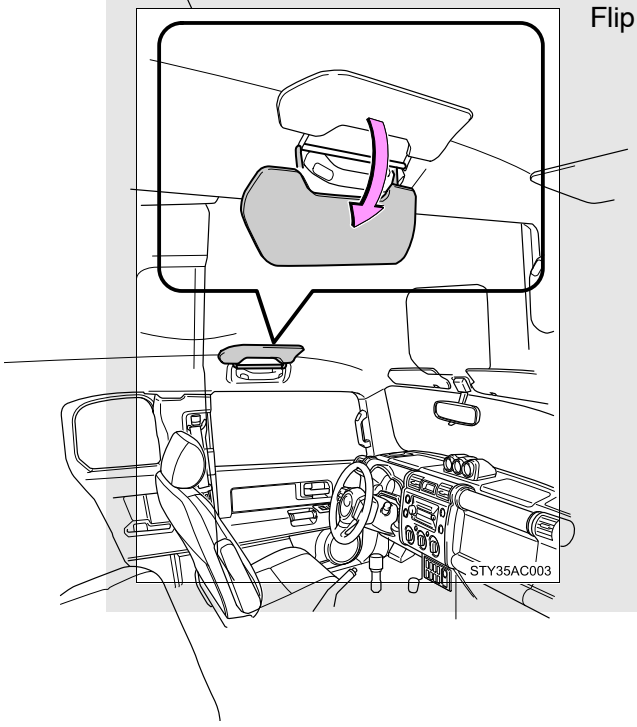

Flip down.

Vanity mirror

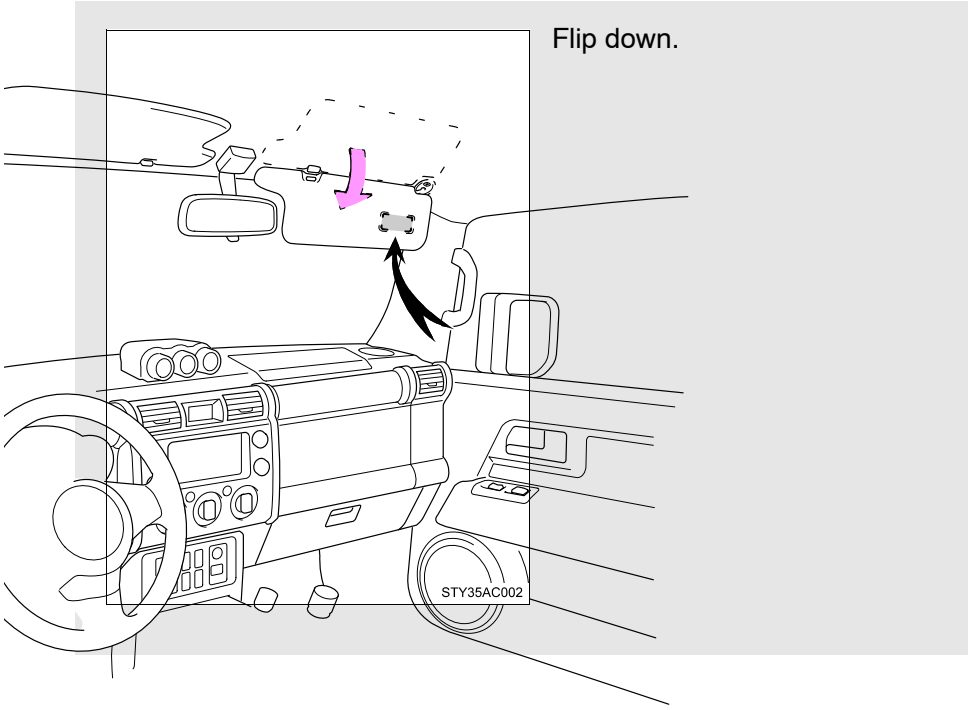

Clock

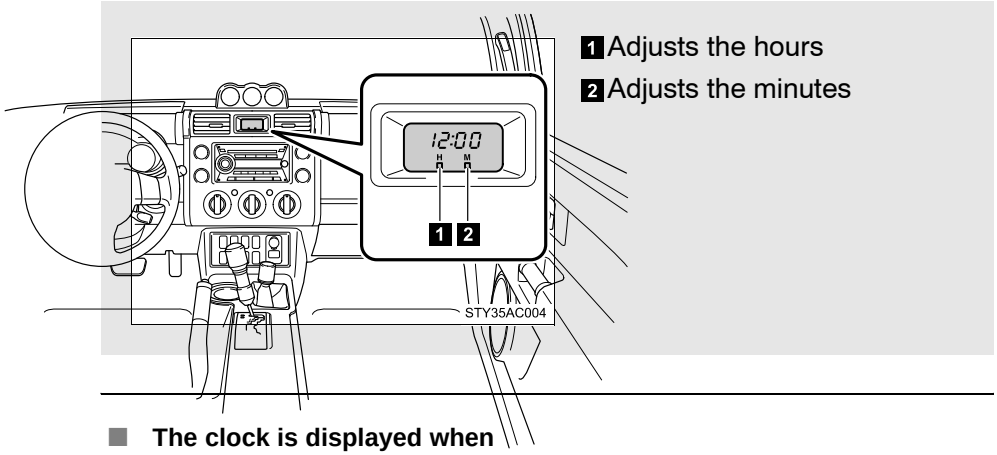

■ **The clock is displayed when**

The engine switch is in the ACC or ON position.

■ **When disconnecting and reconnecting battery terminals**

The time display will automatically be set to 1:00.

Outside temperature display (if equipped)

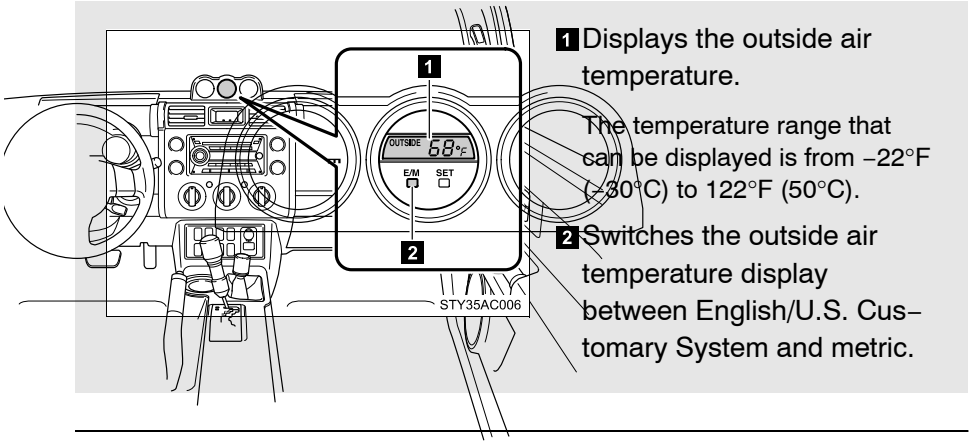

1 Displays the outside air temperature.

The temperature range that can be displayed is from –22°F (–30°C) to 122°F (50°C).

2 Switches the outside air temperature display between English/U.S. Customary System and metric.

■ **When – –°C or – –°F is displayed**

The system may be malfunctioning. Take your vehicle to your Toyota dealer.

■ **The outside air temperature is displayed when**

The engine switch is in the ON position.

■ **When disconnecting and reconnecting battery terminals**

The display will automatically be set to the initial mode.

Power outlet (12V DC)

The power outlet can be used for 12 V accessories that run on less than 10A.

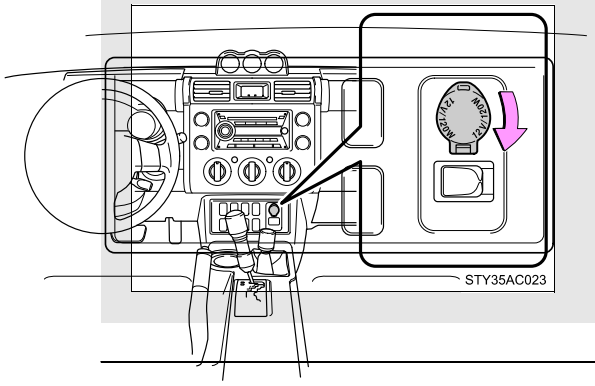

The power outlet can be used when

The engine switch is in the ACC or ON position.

NOTICE

To avoid damaging the power outlet

Close the power outlet lid when not in use.
Foreign objects or liquids that enter the power outlet may cause a short circuit.

To prevent the fuse from being blown

Do not use an accessory that uses more than 12V/10A.

To prevent the battery discharge

Do not use the power outlet longer than necessary when the engine is not running.

Power outlet (if 115V AC equipped)

The power outlet can be used for electrical appliances.

Operation

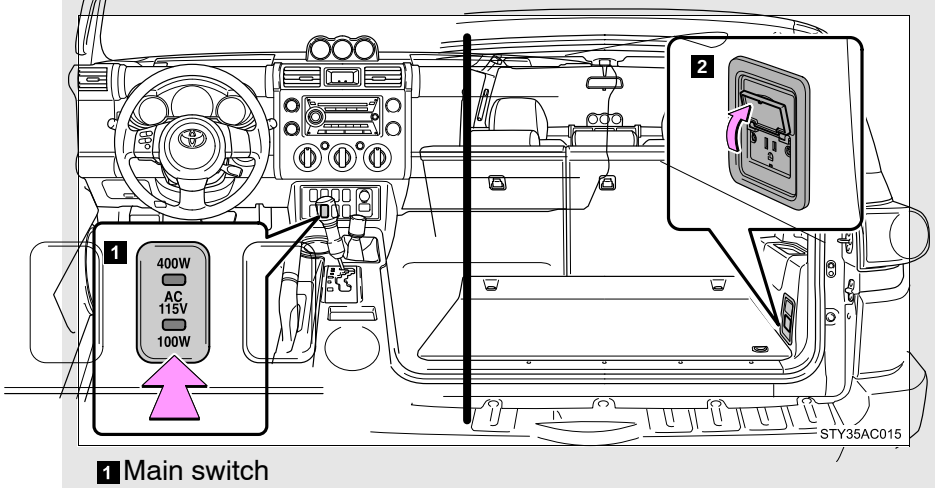

1 Main switch

To use the power outlet, turn on the main switch.

The power supply starts a few seconds after the main switch is pressed.

2 Power outlet socket

Maximum available capacity of the power outlet

- While the vehicle is being driven

  The maximum capacity of the power outlet is always 115V AC/100W.

- When the vehicle is stationary

  The maximum capacity of the power outlet varies depending on the following conditions.

- The maximum capacity is 115V AC/400W when the following condition applies:
  - Vehicles with an automatic transmission:
    The shift lever is in P or N.
  - Vehicles with a manual transmission:
    The shift lever is in N and the clutch pedal is not depressed.

  A maximum capacity of 400W can only be restored by turning the power outlet main switch off and then on again under condition described above.
- The maximum capacity is 115V AC/100W when the following condition applies:
  - Vehicles with an automatic transmission:
    The shift lever is moved to any positions other than P and N.
  - Vehicles with a manual transmission:
    The clutch pedal is depressed.

■ **The power outlet can be used when**

The engine is started.

■ **The indicator light changes according the maximum available capacity, as follows:**

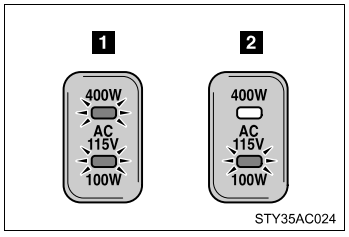

1 Indicates 115V AC/400W

2 Indicates 115V AC/100W

■ **When the power outlet is in operation**

The sound of the cooling fan may be heard from the right side of the luggage compartment. This is normal and does not indicate a malfunction.

If the engine is started with the power outlet main switch on

The maximum capacity of the power supply may decrease to below the standard, or may be cut off completely, even when the vehicle is stationary.

The protection circuit may be activat ed to cut the power supply if any of the following conditions apply:

- The engine is started with the power outlet main switch on.
- Use of electrical appliances exceeding the maximum capacity is attempted.

  A sound may be heard when the protection circuit is activated.
  This is normal and does not indicate a malfunction.
- Electrical appliances, which consume power exceeding 100W, have been used continuously for a long time period.
- The total power usage by all electrical features (headlights, air conditioning, etc.) has exceeded the total vehicle maximum for an extended period of time.

If the protection circuit is activated and the power supply is cut, conduct the following procedure:

STEP 1 Park the vehicle in a safe place, and then securely apply the parking brake.

STEP 2 Check and ensure the following conditions

▶ Vehicles with an automatic transmission:
The shift lever is in P or N.

▶ Vehicles with a manual transmission:
The shift lever is in N and the clutch pedal is not depressed.

STEP 3 Make sure that the power consumption of the electric appliance is within the maximum capacity of the power outlet and the appliance is not broken.

STEP 4 Press the power outlet main switch again.

When the cabin temperature is high, open the windows to cool the temperature down. Once it reaches the normal temperature, turn the power outlet main switch on again.

If the power supply is not resumed even after performing the above procedure, have the vehicle inspected by a Toyota dealer.

CAUTION

■ **Using a power outlet**

Observe the following precautions to reduce the risk of injury.

- Use of the power outlet when it is wet with drinking water or snow may result in electrical shocks and is extremely dangerous. The power outlet must be thoroughly dried before use.
- Do not allow children to use or play with the power outlet.
- Be careful not to get any part of your body caught in the power outlet lid.
- When using electrical appliances, strictly follow any cautions and notices written on their labels and in the manufacturers' instruction manuals.
- Do not modify, disassemble or repair the power outlet or its inverter, in any way. Doing so may result in unexpected malfunctions or accidents, which could cause serious damage or injuries. Contact a Toyota dealer for any necessary repairs.

■ **To prevent injuries and accidents, securely fix all electric appliances before use and do not use any appliances that may do any of the following:**

- Distract the driver while driving, or hamper safe driving.
- Result in a fire or burn injuries due to the appliance rolling, falling or overheating while driving.
- Emit steam, while the windows of the cabin are closed.

■ **To prevent unexpected accidents, such as electric shocks, do not perform any of the following.**

- Using the power outlet for electric heaters while sleeping.
- Contaminating the power outlet with liquid substances or mud.
- Handling electrical appliance plugs at the power outlet with wet hands or feet.
- Inserting foreign objects into the power outlet.
- Using malfunctioning electric appliances.
- Inserting inappropriate or badly fitting plugs into the power outlet.

NOTICE

■ **To avoid damaging the power outlet and the plug**

- Close the power outlet lid when not in use.
- Foreign objects or liquids that enter the power outlet may cause a short circuit.
- Do not use plug adaptors to connect too many plugs to the power outlet.
- After inserting a plug, gently close the power outlet lid.

■ **To prevent the fuse from being blown**

Do not use a 115V AC appliance that requires more than maximum capacity.

If a 115V AC appliance that consumes more than maximum capacity is used, the protection circuit will cut the power supply.

■ **Appliances that may not operate properly (115V AC)**

The following 115V AC appliances may not operate even if their power consumption is under maximum capacity.

- Appliances with high initial peak wattage
- Measuring devices that process precise data.
- Other appliances that require an extremely stable power supply

■ **To prevent the battery from being discharged**

Turn off all the vehicle's electronic equipment and accessories, such as the headlights and air conditioning, when elec trical appliances that consume in excess of 100W are used continuously for long periods of time.

■ **To prevent any damage caused by heat**

Do not use any electrical appliances that give off intense heat such as toasters, in any locations including the internal or external trim, seats and deck.

- Do not use any electrical appliances, which are easily affected by vibration or heat, inside the vehicle.
  Vibration while driving, or the heat of the sun while parking, may result in damage to those electrical appliances.

NOTICE

■ **If any electrical appliances are to be used while driving**

Securely fasten both the appliances and their cables to prevent them from falling or getting caught any of the power train components.

■ **If the power outlet is loose when an electrical appliance plug is connected**

Replace the outlet.
Contact a Toyota dealer for any necessary replacements.

■ **If the power outlet gets dirty**

Turn the main switch off and use a soft, clean cloth to wipe it gently.
Do not use any cleansing materials, such as organic solvents, wax, or compound cleaners, as these may damage the power outlet or cause it to malfunction.

Armrest

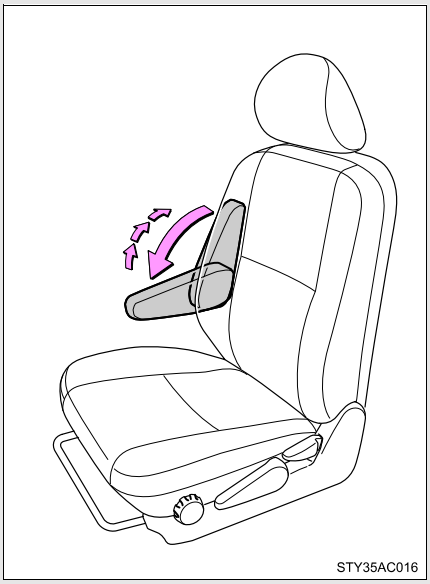

Adjusting to the desired angle:

STEP 1 Lower the armrest from the highest position to the lowest position.

STEP 2 Raise the armrest to the desired angle.

Unlock the armrest:
Lift the armrest to raise it to the highest position.

NOTICE

To prevent damage to the armrest

Do not place too much strain on the armrest.

Floor mat

Securely place a mat that matches the size of the space on the carpet.

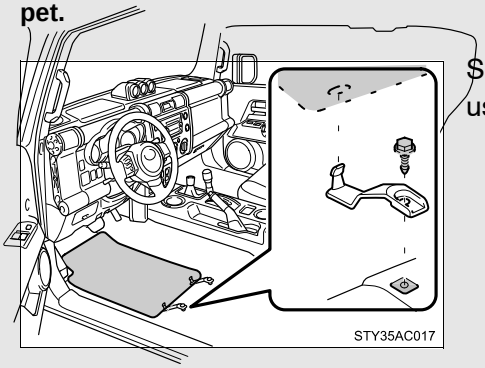

Secure the front floor mat using the hooks provided.

CAUTION

■ **When inserting the floor mat**

Make sure the floor mat is properly placed on the vehicle carpet and the correct side face upward. If the floor mat slips and interferes with the movement of the pedals during driving, it may cause an accident.

Luggage storage box (vehicles without sub woofer)

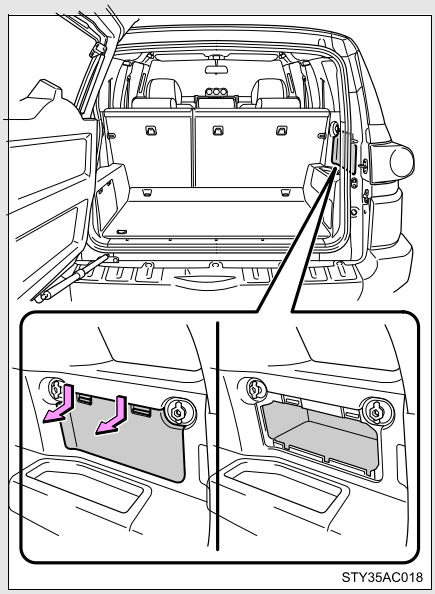

Push the lid down and pull it towards you.

CAUTION

Caution while driving

Keep the luggage storage box closed. Injuries may result in the event of an accident or sudden braking.

Tie−down hooks

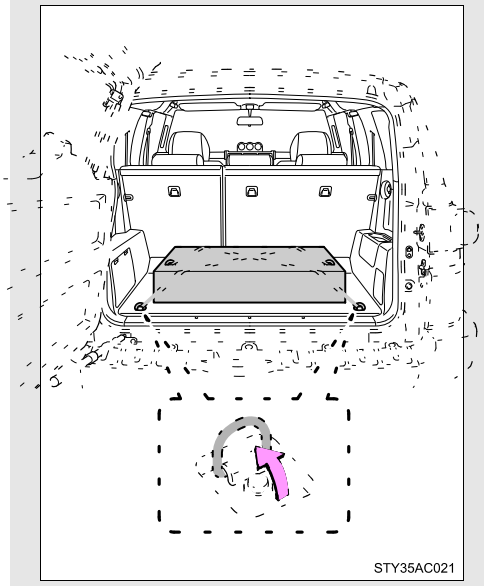

Tie−down hooks are provided for securing loose items.

Cargo net hooks

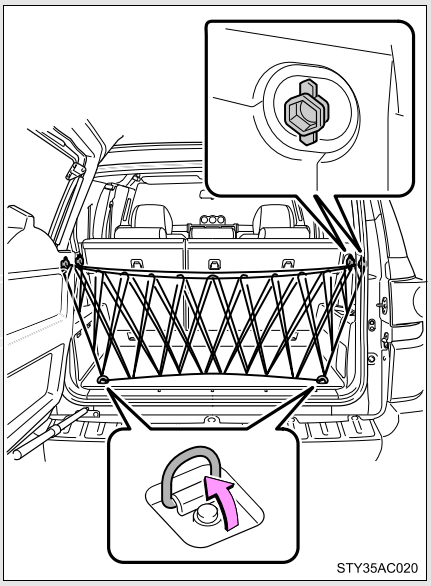

To hang the cargo net, use the cargo net hooks and tie–down hooks.

The cargo net itself is not included as an original equipment.

Shopping bag hooks

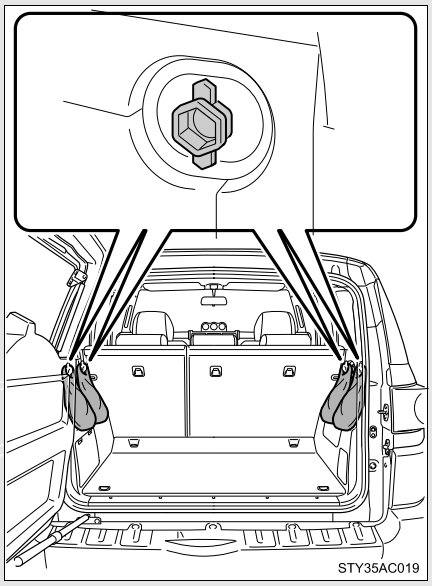

To hang the shopping bag, use the cargo net hooks.

CAUTION

When the tie–down hooks and cargo net hooks are not in use

To avoid injury, always return the tie–down hooks and cargo net hooks to their positions when they are not in use.

NOTICE

To prevent damage to the cargo net hooks and shopping bag hooks

- Do not hang any object heavier than 8.8 lb. (4 kg) in them.
- Avoid hanging things other than a cargo net on it when using the hooks as cargo net hooks.

Compass (if equipped)

The compass indicates the direction that the vehicle is heading.

Operation

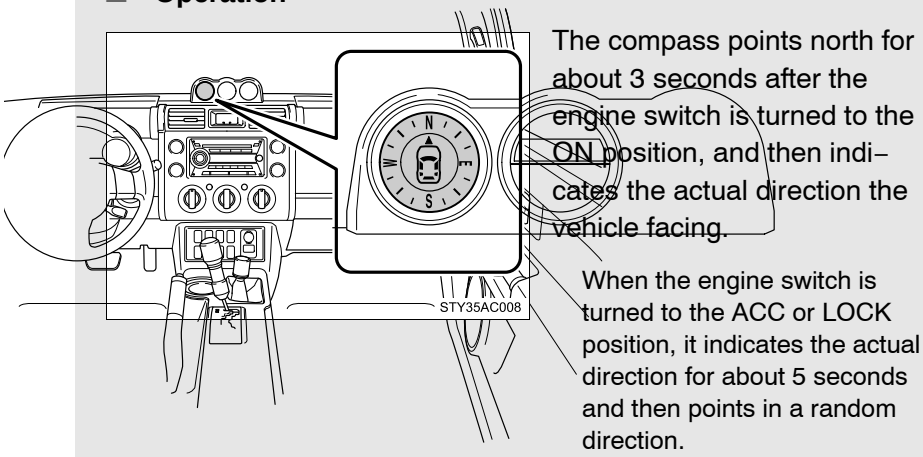

The compass points north for about 3 seconds after the engine switch is turned to the ON position, and then indicates the actual direction the vehicle facing.

When the engine switch is turned to the ACC or LOCK position, it indicates the actual direction for about 5 seconds and then points in a random direction.

Displays and directions

Display	Direction
NNorth	
EEast	
SSouth	
WWest	

Calibrating the compass

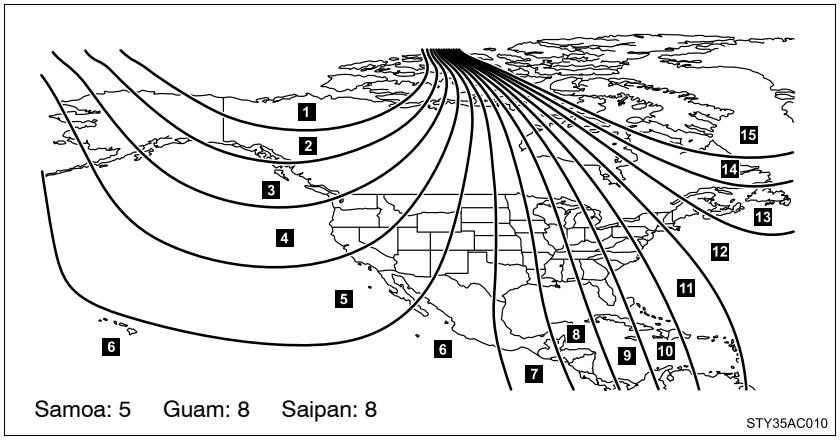

The direction display deviates fr om the true direction determined by the earth's magnetic field. The amoun t of deviation varies according to the geographic position of the vehicle.

If you cross over a map boundary shown in illustration, the compass will deviate.
To obtain higher precision or perfect calibration, refer to the following.

Deviation calibration

STEP 1 Stop the vehicle where it is safe to drive in a circle.

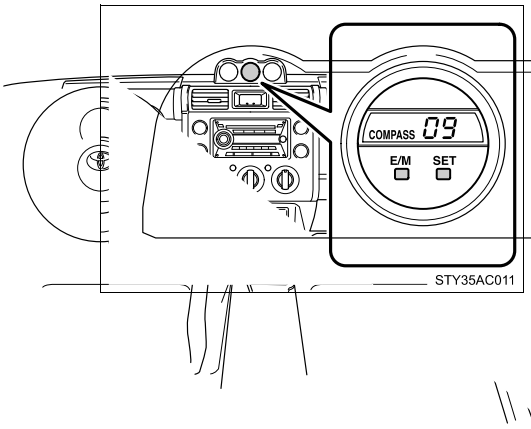

STEP 2 Press the SET button until a number (1 to 15) appears on the outside temperature display.

STEP 3 Press the E/M button, and referring to the map above, select the num– ber of the zone where you are.

STEP 4 After calibration, leave the syst em for 6 seconds or press the SET button for about 2 seconds.

If the display returns to the outside temperature display, the calibration is complete.

Circling calibration

STEP 1 Stop the vehicle where it is safe to drive in a circle.

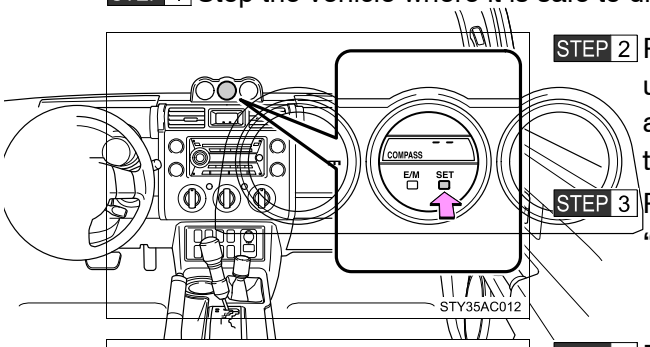

STEP 2 Press the SET button until the zone number appears on the outside temperature display.

STEP 3 Push the SET button. "– –" will start moving.

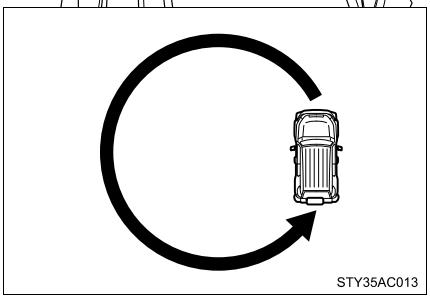

STEP 4 Drive the vehicle in a circle at 5 mph (8 km/h).

If there is not enough space to drive in a circle, drive around the block until the direction is displayed.

When the compass display returns to the outside temperature display, calibration is complete.

When circling calibration fails, Er is displayed for 2 seconds and then COMPASS flashes. It also flashes when circling calibration is not completed.

If you want to cancel the calibration before it is complete, press the SET button for about 2 seconds.

Conditions unfavorable to correct operation

The compass may not show the correct direction in the following conditions:

- The vehicle is stopped immediately after turning.

  The compass does not adjust while the vehicle is stopped.
- The engine switch is turned off immediately after turning.
- The vehicle is on an inclined surface.
- The vehicle is in a place where the earth's magnetic field is subject to interference by artificial magnetic fields (underground car park/parking lot, under a steel tower, between buildings, roof car park/parking lot, near an intersection, near a large vehicle, etc.).
- The vehicle has become magnetized.
  (There is a magnet or metal object on or near the accessory meter.)
- The battery has been disconnected.

CAUTION

While driving the vehicle

Do not adjust the display. Be sure to adjust the display only when the vehicle is stopped.

When doing the circling calibration

Be sure to secure a wide space, and watch out for people and vehicles in the neighborhood. Do not violate any local traffic rules while performing circling calibration.

NOTICE

To avoid the compass malfunctions

Do not place magnets or any metal objects on or near the accessory meter. Doing this may cause a malfunction of the compass sensor.

To ensure normal operation of the compass

- Do not perform circling calibration of the compass in a place where the earth's magnetic field is subject to interference by artificial magnetic fields.
- During calibration, do not operate electric systems (power windows, etc.) as they may interfere with the calibration.

Cleaning and protecting the vehicle exterior

Perform the following to protect the vehicle and maintain it in prime condition.

- Working from top to bottom, liberally apply water to the vehicle body, wheel wells and underside of the vehicle to remove any dirt and dust.
  Wash the vehicle body using a sponge or soft cloth, such as a chamois.
- For hard−to−remove marks, use car wash soap and rinse thoroughly with water.
- Wipe away any water.
- Wax the vehicle when the waterproof coating deteriorates.

If water does not bead on a clean surface, apply wax when the vehicle body is cool.

Automatic car washes

- Before washing the vehicle, do the following.
  - Fold the mirrors back.
  - Remove the antenna.
- Brushes used in automatic car washes may scratch the vehicle surface and harm your vehicle's paint.

High pressure automatic car washes

Do not allow the nozzles of the car wash to come within close proximity of the windows. Before entering an automatic car wash, check that the fuel filler door on your vehicle is closed properly.

Touch−up paint (if equipped)

Touch−up paint may be used to cover small chips or scratches.

Apply the paint soon after the damage occurs or corrosion may set in. To apply the touch−up paint so it is hardly noticeable the trick is to apply it only to the bare spots. Apply only the smallest amount possible and do not paint the surface around the scratch or chip.

Aluminum wheels (if equipped)

Remove any dirt immediately by using a neutral detergent. Do not use hard brushes or abrasive cleaners. Do not use strong or harsh chemical cleaners. Use the same mild detergent and wax as used on the point.

Bumpers and side moldings

Do not scrub with abrasive cleaners.

To prevent deterioration and body corrosion

- Wash the vehicle immediately in the following cases:
  - After driving near the sea coast
  - After driving on salted roads
  - If you see coal tar or tree sap on the paint surface
  - If you see dead insects or insect droppings on the paint
  - After driving in an area contaminated with soot, oily smoke, mine dust, iron powder or chemical substances
  - If the vehicle becomes heavily soiled in dust or mud
  - If liquids such as benzene and gasoline are spilled on the paint surface
- If the paint is chipped or scratched, have it repaired immediately.

CAUTION

Caution about the exhaust pipe

Exhaust gasses cause the exhaust pipe to become quite hot.

When washing the vehicle, be careful not to touch the pipe until it has cooled sufficiently, as touching a hot exhaust pipe can cause burns.

NOTICE

To protect your vehicle's painted surfaces

Do not use organic cleaners such as benzene or gasoline.

Cleaning the exterior lights

- Wash carefully. Do not use organic substances or scrub with a hard brush. This may damage the surfaces of the lights.
- Do not apply wax on the surfaces of the lights. Wax may cause damage to the lenses.

Cleaning and protecting the vehicle interior

The following procedures will help protect your vehicle's interior and keep it in top condition:

Protecting the vehicle interior

Remove dirt and dust using a vacuum cleaner. Wipe dirty surfaces with a cloth dampened with lukewarm water.

Cleaning the leather areas

- Remove dirt and dust using a vacuum cleaner.
- Wipe any excess dirt and dust with a soft cloth dampened with diluted detergent.

  Use a diluted water solution of approximately 5% neutral wool detergent.
- Wring out any excess water from the cloth and thoroughly wipe off all remaining traces of detergent.
- Wipe the surface with a dry, soft cloth to remove any remaining moisture. Allow the leather to dry in a shaded and ventilated area.

Cleaning the inside of the rear window

Do not use glass cleaner to clean the rear window, as this may cause damage to the rear window defogger heater wires. Use a cloth dampened with lukewarm water to gently wipe the window clean. Wipe the window in strokes running parallel to the heater wires.

Caring for leather areas

Toyota recommends cleaning the interior of the vehicle at least twice a year to maintain the quality of the vehicle's interior.

Shampooing the carpets

There are several commercial foaming−type cleaners available. Use a sponge or brush to apply the foam. Rub in overlapping circles. Do not apply water. The excellent results are obtained when keeping the carpet as dry as possible.

Seat belts

Clean with mild soap and lukewarm water using a cloth or sponge. Also check the belts periodically for excessive wear, fraying or cuts.

CAUTION

Water in the vehicle

- Be careful not to splash or spill liquid on the floor.
- Do not get any of the SRS components or wiring in the vehicle interior wet. (P. 73)

  Electrical malfunction may cause the airbags to deploy or not function properly, resulting in death or severe injury.

NOTICE

Cleaning detergents

Do not use organic substances such as benzene or gasoline, acidic or alkaline solutions, dye, bleach or other detergent. Doing so may discolor the vehicle interior or cause streaks or damage to painted surfaces.

Preventing damage to leather surfaces

Observe the following precautions to avoid damage to and deterioration of leather surfaces.

- Remove any dust or dirt on leather surfaces immediately.
- Do not expose the vehicle to direct sunlight for extended periods of time. Park the vehicle in the shade, especially during summer.
- Do not place items made of vinyl, plastic, or that contain wax on the upholstery, as they may stick to the leather surface if the vehicle interior heats up significantly.

Water on the floor

Do not wash the vehicle floor with water.
Vehicle systems such as the audio system may be damaged if water comes into contact with electrical components under the floor of the vehicle, and may also cause the body to rust.

NOTICE

Cleaning the inside of the rear window

Be careful not to scratch or damage the heater wires.

Maintenance requirements

To ensure safe and economical driv ing, day−to−day care and regular maintenance is essential. It is the owner's responsibility to perform regular checks. Toyota recommends the following maintenance.

General maintenance

Should be performed on a daily basis. This can be done by your−self or by a Toyota dealer.

Scheduled maintenance

Should be performed at specified intervals according to the maintenance schedule.

For details about maintenance items and schedules, refer to the "Scheduled Maintenance Guide" or "Owner's Manual Supplement".

Do−it−yourself maintenance

You can perform some maintenance procedures yourself.
Please be aware that do−it−yourself maintenance may affect war−ranty coverage.

The use of Toyota Repair Manuals is recommended.

For details about warranty coverage, see the separate "Owner's Warranty Information Booklet", "Owner's Manual Supplement".

Repair and replacement

It is recommended that genuine Toyota parts be used for repair to ensure performance of each system. If non−Toyota parts are used in replacement or if a repair shop other than Toyota deal er performs repairs, confirm the war−ranty coverage.

Allow inspection and repairs to be performed by a Toyota dealer

- Toyota technicians are well−trained specialists and are kept up to date with the latest service information. They are well informed about the operations of all systems on your vehicle.
- Keep a copy of the repair order. It proves that the maintenance that has been performed is under warranty coverage. If any problem should arise while your vehicle is under warranty, your Toyota dealer will promptly take care of it.

CAUTION

Warning in handling of battery

- Engine exhaust, some of its constituents, and a wide variety of automobile components contain or emit chemicals known to the State of California to cause cancer and birth defects and other reproductive harm. Work in a well ventilated area.
- Oils, fuels and fluids contained in vehicles as well as waste produced by component wear contain or emit chemicals known to the State of California to cause cancer and birth defects or other reproductive harm. Avoid exposure and wash any affected area immediately.
- Battery posts, terminals and related accessories contain lead and lead compounds which are known to cause brain damage. Wash your hands after handling. (P. 283)

General maintenance

Listed below are the general maintenance items that should be performed at the intervals specified in the "Scheduled Maintenance Guide" or "Owner's Manual Supplement". It is recommended that any problem you notice should be brought to the attention of your Toyota dealer or qualified service shop for advice.

Engine compartment

Items	Check points
Battery	Maintenance−free. (P. 283)
Brake fluid	At the correct level? (P. 280)
Engine coolant	At the correct level? (P. 279)
Engine oil	At the correct level? (P. 275)
Exhaust system	No fumes or strange sounds?
Power steering fluid	At the correct level? (P. 282)
Radiator/condenser/hoses	Not blocked with foreign matter? (P. 280)
Washer fluid	At the correct level? (P. 286)

Vehicle interior

Items	Check points
Accelerator pedal	• Moves smoothly (without uneven pedal effort or catching)?
Automatic transmission “Park” mechanism	• Can the vehicle be hold securely on an incline with the shift lever in P?
Brake pedal	• Moves smoothly? • Does it have appropriate clearance and correct amount of free play?
Brakes	• Not pull to one side when applied? • Loss of brake effectiveness? • Spongy feeling brake pedal? • Pedal almost touches floor?
Clutch pedal	• Moves smoothly? • Does it have correct amount of free play?
Head restraints	• Move smoothly and lock securely?
Indicators/buzzers	• Function properly?
Lights	• Do all the lights come on? • Headlights aimed correctly? (P. 314)
Parking brake	• Moves smoothly? • Can hold the vehicle securely on an incline?
Seat belts	• Does the seat belt system operate smoothly? • Are the belts undamaged?
Seats	• Do the seat controls operate properly?

Items	Check points
Steering wheel	• Moves smoothly? • Has correct free play? • No strange noises?

Vehicle exterior

Items	Check points
Door	• Operate smoothly?
Engine hood	• The lock system works properly?
Fluid leaks	• Is there any leakage after parking?
Tire	• Inflation pressure is correct? • Tire surfaces not worn or damaged? • Tires rotated according to the maintenance schedule? • Wheel nuts are not loose?

CAUTION

If the engine is running

Turn the engine off and ensure that there is adequate ventilation before performing maintenance checks.

Some states have vehicle emissi on inspection programs which include OBD (On Board Diagnostics) checks. The OBD system monitors the operation of the emission control system.

If the malfunction indicator lamp comes on

The OBD system determines that a problem exists somewhere in the emission control system. Your vehicle may not pass the I/M test and may need to be repaired. Contact your Toyota dealer to service the vehicle.

Your vehicle may not pass the I/M test:

- When the battery is disconnected or discharged

  Readiness codes that are se t during ordinary driving are erased.
  Also, depending on your driving habits, the readiness codes may not be completely set.

- When the fuel tank cap is loose

  The malfunction indicator lamp comes on as a temporary malfunction and your vehicle may not pass the I/M test.

When the malfunction indicator lamp goes off after several driving trips

The error code in the OBD system will not be cleared unless the vehicle is driven 40 or more times.

If your vehicle does not pass the I/M test

Contact your Toyota dealer to prepare the vehicle for re−testing.

Do−it−yourself service precautions

If you perform maintenance yourself, be sure to follow the correct procedures as given in these sections.

Items	Parts and tools
Battery condition (P. 283)	•Warm water • Baking soda • Grease • Conventional wrench (for terminal clamp bolts)
Brake fluid level (P. 280)	• FMVSS No.116 DOT 3 or SAE J1703 brake fluid • Rag or paper towel • Funnel (used only for adding brake fluid)
Engine coolant level (P. 279)	• “Toyota Super Long Life Coolant” or similar high quality ethylene glycol based non−silicate, non−amine, non−nitrite and non−borate coolant with long−life hybrid organic acid technology. U.S.A.: “Toyota Super Long Life Coolant” is pre−mixed with 50% coolant and 50% deionized water. Canada: “Toyota Super Long Life Coolant” is pre−mixed with 55% coolant and 45% deionized water. • Funnel (used only for adding engine coolant)
Engine oil level P. 275)	• Toyota Genuine Motor Oil or equivalent • Rag or paper towel • Funnel (used only for adding oil)
Fuses (P. 303)	• Fuse with same amperage rating as original

Items	Parts and tools
Light bulbs (P. 314)	• Bulb with same number and wattage rating as original • Phillips–head screwdriver
Power steering fluid level (P. 282)	• Automatic transmission fluid DEXRON® II or III • Rag or paper towel • Funnel (used only for adding power steering fluid)
Radiator and condenser (P. 280)	
Tire inflation pressure (P. 292)	• Tire pressure gauge • Compressed air source
Washer fluid (P. 286)	• Water • Washer fluid containing antifreeze (for winter use) • Funnel (used only for adding washer fluid)

CAUTION

The engine compartment contains many mechanisms and fluids that may move suddenly, become hot, or become electrically energized. To avoid death or serious injury observe the following precautions.

When working on the engine compartment

- Keep hands, clothing, and tools away from the moving fan and engine drive belt.
- Be careful not to touch the engine, radiator, exhaust manifold, etc. right after driving as they may be hot. Oil and other fluids may also be hot.
- Do not leave anything that may burn easily, such as paper or rags, in the engine compartment.
- Do not smoke, cause sparks or expose an open flame to fuel or the battery. Fuel and battery fumes are flammable.
- Be extremely cautious when working on the battery. It contains poisonous and corrosive sulfuric acid.
- Take care because brake fluid can harm your hands or eyes and damage painted surfaces.
  If fluid gets on your hands or in your eyes, flush the affected area with clean water immediately.

  If you still experience discomfort, see a doctor.

When working near the cooling fan or radiator grille

Be sure the engine switch is off.
With the engine switch on, the cooling fan may automatically start to run if the air conditioning is on and/or the coolant temperature is high.

Safety glasses

Wear safety glasses to prevent flying or falling material, fluid spray, etc. from getting in the eyes.

NOTICE

If you remove the air cleaner

Driving with the air cleaner removed may cause excessive engine wear due to dirt in the air. Also a backfire could cause a fire in the engine compart–ment.

If the fluid level is low or high

It is normal for the brake fluid level to go down slightly as the brake pads wear or when the fluid level in the accumulator is high.
If the reservoir needs frequent refilling, it may indicate a serious problem.

Release the lock from the inside of the vehicle to open the hood.

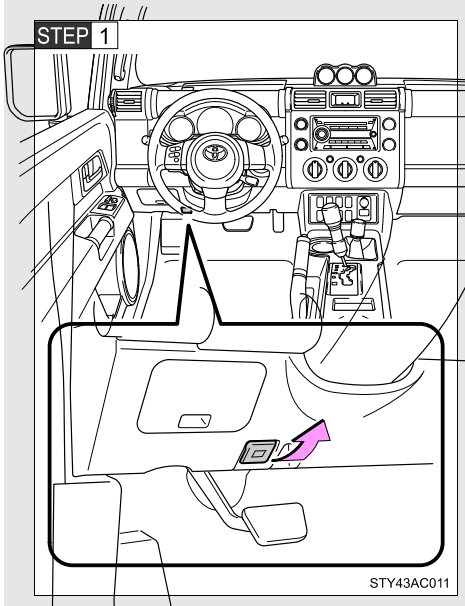

Pull the hood release lever.

The hood will pop up slightly.

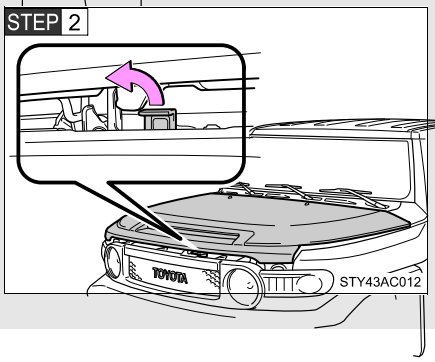

Pull up the hood catch lever and lift the hood.

CAUTION

■ **Pre−driving check**

Check that the hood is fully closed and locked.
If the hood is not locked properly, it may open while the vehicle is in motion and cause an accident, which may result in death or serious injury.

Engine compartment

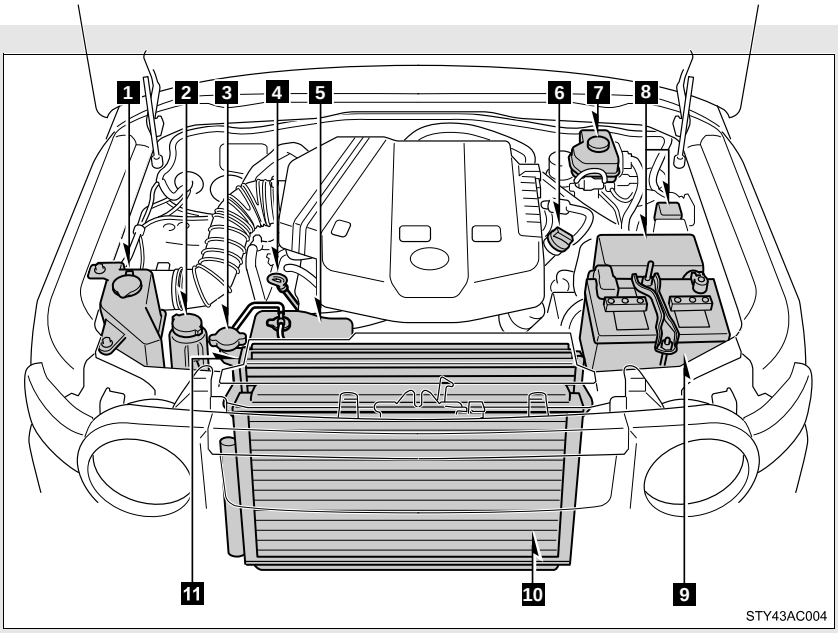

1 Washer fluid tank (P. 286)
2 Power steering fluid reservoir (P. 282)
3 Radiator cap
4 Engine oil level dipstick (P. 275)
5 Engine coolant reservoir (P. 279)
6 Engine oil filler cap (P. 275)
7 Brake fluid reservoir (P. 280)
8 Fuse box (P. 303)
9 Battery (P. 283)
10 Condenser (P. 280)
11 Radiator (P. 280)

Engine oil

With the engine at operating temperature and turned off, check the oil level on the dipstick.

Checking the engine oil

STEP 1 Park the vehicle on level gro und. After turning off the engine, wait a few minutes for the oil to drain back into the bottom of the engine.

STEP 2

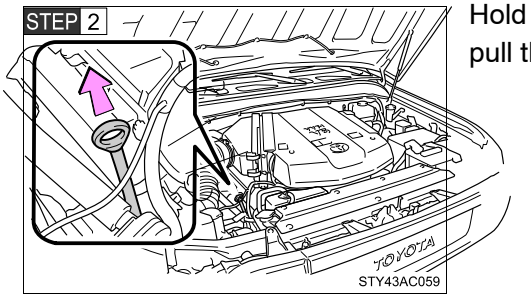

Hold a rag under the end and pull the dipstick out.

STEP 3 Wipe the dipstick clean.

STEP 4 Reinsert the dipstick fully.

STEP 5 Holding a rag under the end, pull the dipstick out and check the oil level.

STEP 6 Wipe the dipstick and reinsert it fully.

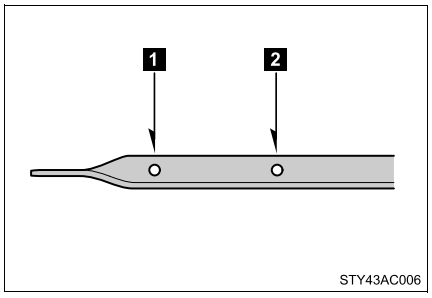

1 Low

2 Full

Adding engine oil

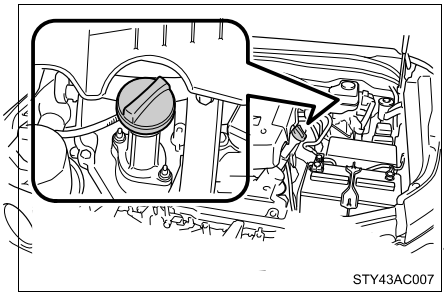

If the oil level is below or near the low level mark, add engine oil of the same type as already in the engine.

Make sure to check the oil type and prepare the items needed before adding oil.

Oil grade	ILSAC multigrade engine oil
Items	Clean funnel

STEP 1 Remove the oil filler cap, turning it counterclockwise.

STEP 2 Add engine oil slowly.

STEP 3 Checking the dipstick.

STEP 4 Reinstall the filler cap, turning it clockwise.

The approximate quantity of oil needed to raise the level between low and full on the dipstick is indicated as follows:

1.6 qt. (1.5 L, 1.3 Imp. qt.)

Recommended viscosity

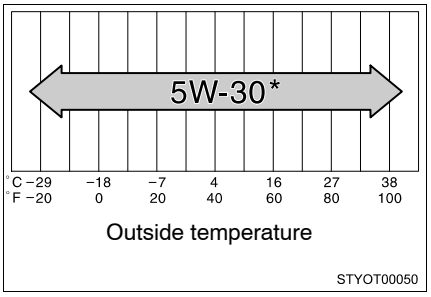

SAE 5W–30 is the best choice for good fuel economy, and good starting in cold weather.

*: If SAE 5W–30 oil is not available, SAE 10W–30 oil may be used. However, it should be replaced with SAE 5W–30 at the next oil change.

How to read oil container labels

Some oil containers are labeled with ILSAC certification marks that help you to select the proper oil.

STYOT00051

Engine oil consumption

- The amount of engine oil consumed depends on the oil viscosity, the quality of the oil and the way the vehicle is driven.
- More oil is consumed under driving conditions such as high speeds and frequent acceleration and deceleration.
- A new engine consumes more oil.
- When judging the amount of oil consumption, keep in mind that the oil may have become diluted, making it difficult to judge the true level accu–rately.
- Oil consumption: Max. 1.1 qt./600 miles, 0.9 Imp.qt./600 miles (1.0 L per 1000 km)
- If you consume more than 1.1 qt. (1.0 L, 0.9 Imp.qt.) every 600 miles (1000 km), contact your Toyota dealer.

After changing the engine oil (U.S.A. only)

The oil change system should be reset. Perform the following procedures:

STEP 1 Turn the engine switch off with the odometer reading shown.(P. 124)

STEP 2 Turn the engine switch to the ON position while holding down the trip meter reset button.

STEP 3 Continue to press and hold the button until the odometer displays 000000.

If the system fails to reset, the light will continue flashing.

CAUTION

Used engine oil

- Used engine oil contains potentially harmful contaminants which may cause skin disorders such as inflammation or skin cancer, so care should be taken to avoid prolonged and repeated contact. To remove used engine oil from your skin, wash thoroughly with soap and water.
- Dispose of used oil and filters only in a safe and acceptable manner. Do not dispose of used oil and filters in household trash, in sewers or onto the ground. Call your Toyota dealer, service station or auto parts store for information concerning recycling or disposal.
- Do not leave used engine oil within the reach of children.

NOTICE

To prevent serious engine damage

Check the oil level on regular basis.

When replacing the engine oil

- Be careful not to spill engine oil on the vehicle components.
- Avoid overfilling, as the engine could be damaged.
- Check the oil level on the dipstick every time you refill the vehicle.
- Be sure the engine oil filler cap is properly tightened.

Engine coolant

The coolant level is satisfactory if it is between the F (Full) and L (Low) lines on the reservoir when the engine is cold.

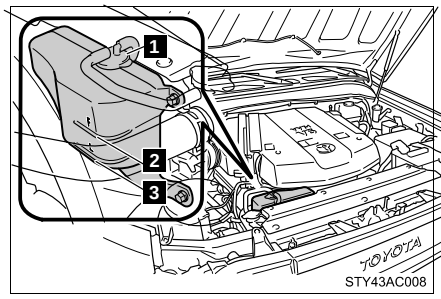

1 Reservoir cap

2 Full

3 Low

If the level is on or below the L line, add coolant up to the F line.

If the coolant level drops within a short time after replenishing

Visually check the radiator, hoses, reservoir cap, radiator cap, drain cock and water pump.
If you cannot find a leak, have your Toyota dealer pressure test the cap and check for leaks in the cooling system.

Coolant selection

Only use “Toyota Super Long Life Coolant” or similar high quality ethylene glycol based non–silicate, non–amine, non–nitrite and non–borate coolant with long–life hybrid organic acid technology.

U.S.A.: “Toyota Super Long Life Coolant” is a mixture of 50% coolant and 50% deionized water. (Enabled: –31 F [–35 C])

Canada: “Toyota Super Long Life Coolant” is a mixture of 55% coolant and 45% deionized water. (Enabled: –44 F [–42 C])

For more details about engine coolant, contact your Toyota dealer.

CAUTION

When the engine is hot

Do not remove the radiator cap.
The cooling system may be under pressure and may spray hot coolant if the cap is removed, causing burns or other injuries.

NOTICE

When adding engine coolant

Coolant is neither plain water nor stra ight antifreeze. The correct mixture of water and antifreeze must be used to provide proper lubrication, corrosion protection and cooling. Be sure to read the antifreeze or coolant label.

If you spill coolant

Be sure to wash it off with water to prevent damage to parts or paint.

Radiator and condenser

Check the radiator and condenser and clear any foreign objects.
If either of the above parts are ex tremely dirty or you are not sure of their condition, have your vehicle checked by your Toyota dealer.

CAUTION

When the engine is hot

Do not touch the radiator or condenser as they may be hot and may cause burns.

Brake fluid

Checking fluid level

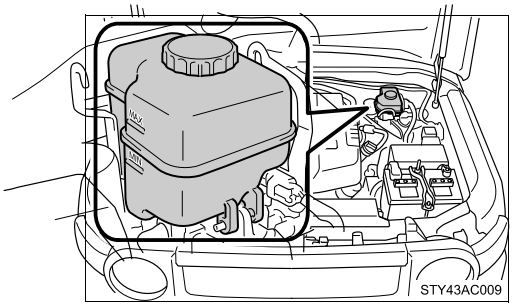

The brake fluid level should be between the MAX and MIN lines on the reservoir.

Adding fluid

Make sure to check the fluid type and prepare the necessary items.

Fluid type	FMVSS No.116 DOT 3 or SAE J1703 brake fluid
Items	Clean funnel

STEP 1 Turn the engine switch off.

STEP 2 Depress the brake pedal 20 times or more.

STEP 3 Remove the reservoir cap.

STEP 4 Add newly opened brake fluid up to the MAX line.

Brake fluid can absorb moisture from the air

Excess moisture in the fluid can cause a dangerous loss of braking efficiency. Use only newly opened brake fluid.

CAUTION

When filling the reservoir

Take care because brake fluid can harm your hands or eyes and damage painted surfaces.
If fluid gets on your hands or in your eyes, flush the affected area with clean water immediately.

If you still experience discomfort, see a doctor.

NOTICE

If the fluid level is low or high

It is normal for the brake fluid level to go down slightly as the brake pads wear or when the fluid level in the accumulator is high.
If the reservoir needs frequent refilling, it may indicate a serious problem.

If you spill fluid

Be sure to wash it off with water to prevent damage to parts or paint.

Power steering fluid

Fluid level

The fluid level should be within the appropriate range.

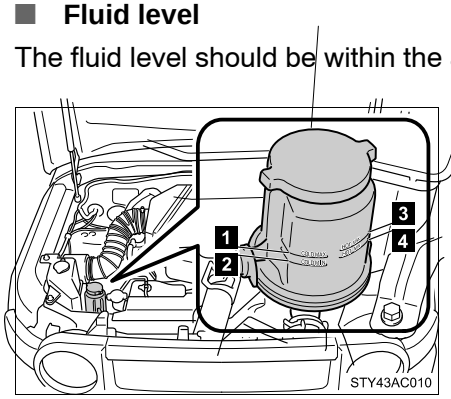

1 Full (when cold)
2 Add fluid (when cold)
3 Full (when hot)
4 Add fluid (when hot)

Hot: Vehicle has been driven around 50 mph (80 km/h) for 20 minutes, or slightly longer in frigid temperatures. (Fluid temperature, 140°F – 175°F [60°C – 80°C])

Cold: Engine has not been run for about 5 hours. (Room temperature, 50°F – 85°F[10°C – 30°C])

Checking the fluid level

Make sure to check the fluid type and prepare the necessary items.

Fluid type	Automatic transmission fluid DEXRON® II or III
Items	Rag or paper towel and funnel (only for adding fluid)

STEP 1 Clean all dirt off the reservoir.

STEP 2 Remove the cap by turning it counterclockwise.

STEP 3 Wipe the dipstick clean.

STEP 4 Reinstall and remove the reservoir cap again.

STEP 5 Check the fluid level.

CAUTION

Checking the fluid level

Take care, as the reservoir may be hot.

NOTICE

When adding fluid

Avoid overfilling, or the power steering may be damaged.

After replacing the reservoir cap

Check the steering box case, vane pump and hose connections for leaks or damage.

Battery

Battery exterior

Make sure that the battery terminals are not corroded and that there are no loose connections, cracks, or loose clamps.

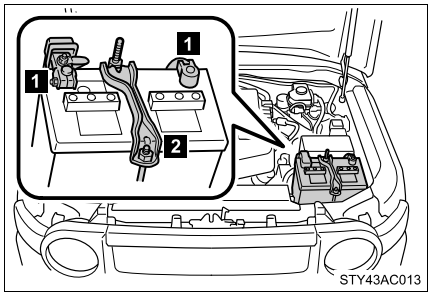

1 Terminals

2 Hold–down clamp

Checking battery condition

Check the battery condition using the indicator color.

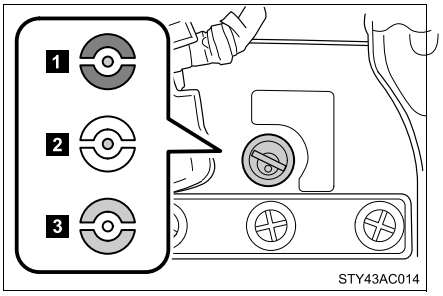

1 Blue: Good condition

2 White: Charging is necessary. Have the vehicle inspected by your Toyota dealer.

3 Red: Not working properly, have the battery checked by your Toyota dealer.

Before recharging

When recharging, the battery produces hydrogen gas which is flammable and explosive. Therefore, before recharging:

- If recharging with the battery installed on the vehicle, be sure to disconnect the ground cable.
- Make sure the power switch on the charger is off when connecting and disconnecting the charger cables to the battery.

CAUTION

Chemicals in the battery

A battery contains poisonous and corrosive sulfuric acid and may produce hydrogen gas which is flammable and explosive. To reduce the risk of death or serious injury, take the following precautions while working on or near battery:

- Do not cause sparks by touching the battery terminals with tools.
- Do not smoke or light a match near the battery.
- Avoid contact with eyes, skin and clothes.
- Never inhale or swallow electrolyte.
- Wear protective safety glasses when working near the battery.
- Keep children away from the battery.

CAUTION

Where to safety charge the battery

Always charge the battery in an open area. Do not charge the battery in a garage or closed room where there is not sufficient ventilation.

How to recharge the battery

Only perform a slow charge (5A or less).
The battery may explode if charged at a quicker rate.

Emergency measures regarding electrolyte

- If electrolyte gets in your eyes
  Flush your eyes with clean water for at least 15 minutes and get immediate medical attention. If possible, continue to apply water with a sponge or cloth while traveling to the nearest medical facility.
- If electrolyte gets on your skin
  Wash the affected area thoroughly. If you feel pain or burning, get medical attention immediately.
- If electrolyte gets on your clothes
  It can soak through clothing on to your skin. Immediately take off the clothing and follow the procedure above if necessary.
- If you accidentally swallow electrolyte
  Drink a large quantity of water or milk. Follow with milk of magnesia, beaten raw egg or vegetable oil. Get emergency medical attention immediately.

NOTICE

When recharging the battery

Never recharge the battery while the engine is running. Also, be sure all accessories are turned off.

Washer fluid

If any washer does not work, the washer tank may be empty.

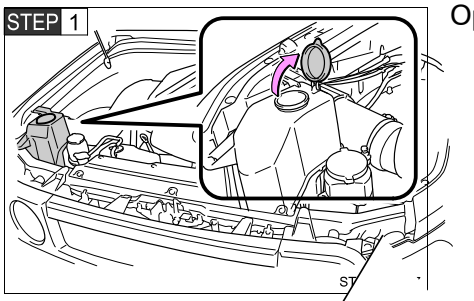

Open the lid.

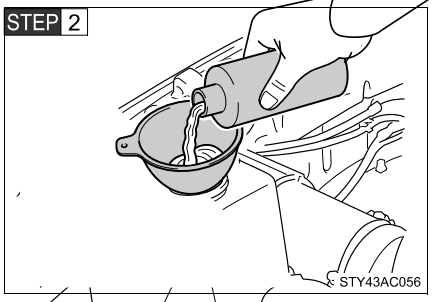

Add washer fluid.

NOTICE

■ **Do not use any fluid other than washer fluid**

Do not use soapy water or engine antifreeze instead of washer fluid.
Doing so may cause streaking on the vehicle's painted surfaces.

■ **Diluting washer fluid**

Dilute washer fluid with water as necessary.
Refer to the freezing temperatures listed on the washer fluid tank.

Replace or rotate tires in accordance with maintenance schedules and treadwear.

Checking tires

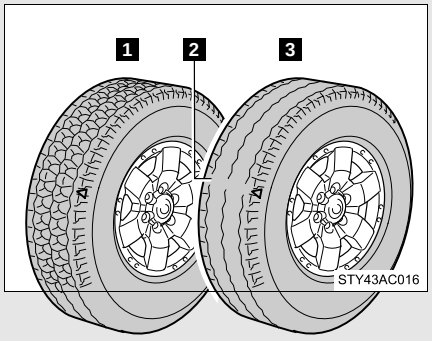

1 New tread

2 Treadwear indicator

3 Worn tread

The location of treadwear indicators is shown by the "TWI" or "△" marks, etc., molded on the sidewall of each tire.

Check spare tire condition and inflation pressure if not rotated.

Tire rotation

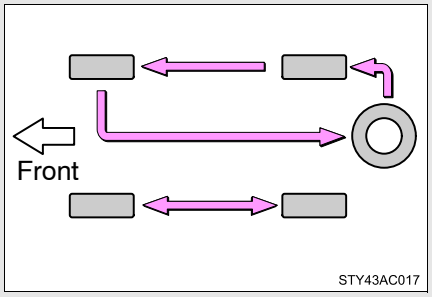

Rotate the tires in the order shown.

To equalize tire wear and extend tire life, Toyota recommends that tire rotation is carried out at the same interval as tire inspection.

The tire pressure warning system

Your Toyota is equipped with a tire pressure warning system that uses tire pressure warning valves and transmitters to detect low tire inflation pressure before serious problems arise. (P. 334)

Installing tire pressure warning valves and transmitters

When replacing tires or wheels, tire pressure warning valves and transmitters must also be installed.

When new tire pressure warning valves and transmitters are installed, sensor ID codes must be registered in the tire pressure warning computer.

Registering ID codes

The tire pressure warning valve and transmitter is equipped with a unique ID code. When replacing a tire pressure warning valve and transmitter, it is necessary to register the ID code of tire pressure warning valve and transmitter. Have the ID code registered by your Toyota dealer.

If the ID code is not registered, the system will not work properly. After about 20 minutes, the tire pressure warning light comes on after blinking for 1 minute to indicate a system malfunction.

■When to replace your vehicle's tires

Tires should be replaced if:

- ●You have tire damage such as cuts, splits, cracks deep enough to expose the fabric or bulges indicating internal damage
- ●A tire goes flat repeatedly or cannot be properly repaired due to the size or location of a cut or other damage

If you are not sure, consult with your Toyota dealer.

■Tire life

Any tire over 6 years old must be checked by a qualified technician even if they have seldom or never been used or damage is not obvious.

■If the tread wears down below 0.16 in. (4 mm) on snow tires

The effectiveness of snow tires is lost.

■Routine tire inflation pressure checks

The tire pressure warning system doe s not replace routine tire inflation pressure checks. Make su re to check tire inflation pressure as part of your routine of daily vehicle checks.

■Maximum load of tire

Check that the maximum load of the re placed tire is greater than 1/2 of the Gross Axle Weight Ratings (GAWR) of either the front axle or the rear axle, whichever is greater.
As for the maximum load of the tire, see the load limit at maximum cold tire inflation pressure mentioned on the sidewall of the tire, and as for the Gross Axle Weight Ratings (GAWR), see the Certification Label.
(P. 292, 363, 375).

■Tire types

1 Summer tires

Summer tires are high−speed performance tires best suited to highway driving under dry conditions. Since summer tires do not have the same traction performance as snow tire s, summer tires are inadequate for driving on snow−covered or icy roads. For driving on snow−covered roads or icy roads, the use of snow tires is recommended. When installing snow tires, be sure to replace all four tires.

2 All season tires

All season tires are designed to prov ide better traction in snow and to be adequate for driving in most winter conditions, as well as for use year round. All season tires, however, do not have adequate traction performance compared with snow tires in heavy or loose snow. Also, all season tires fall short in acceleration and handling performance compared with summer tires in highway driving.

3 Snow tires

For driving on snow−covered roads or icy roads, we recommend using snow tires. If you need snow tires, select tires of the same size, con−struction and load capacity as the or iginally installed tires. Since your vehicle has radial tires as original equipment, make sure your snow tires also have radial construction. Do not install studded tires without first checking local regulations for possible restriction. Snow tires should be installed on all wheels. (P. 169)

Tire pressure warning system certification

▶ For vehicles sold in U.S.A.

NOTE:
This device complies with Part 15 of the FCC Rules. Operation is subject to the following two conditions: (1) This device may not cause harmful interference, and (2) this device must accept any interference received, including interference that may cause undesired operation.

NOTICE:
This equipment has been tested and found to comply with the limits for a Class B digital device, pursuant to Part 15 of the FCC Rules. These limits are designed to provide reasonable protection against harmful interference in a residential installation. This equipment generates, uses and can radiate radio frequency energy and, if not installed and used in accordance with the instructions, may cause harmful interference to radio communications. However, there is no guarantee that interference will not occur in a particular installation. If this equipment does cause harmful interference to radio or tele vision reception, which can be determined by turning the equipment off and on, the user is encouraged to try to correct the interference by one or more of the following measures:

- Reorient or relocate the receiving antenna.
- Increase the separation between the equipment and receiver.
- Connect the equipment into an outlet on a circuit different from that to which the receiver is connected.
- Consult the dealer or an experienced radio/TV technician for help.

FCC WARNING:
Changes or modifications not expre ssly approved by the party responsible for compliance could void the user's authority to operate the equipment.

▶ For vehicles sold in Canada

NOTE:
Operation is subject to the following two conditions: (1) this device may not cause interference, and (2) this device must accept any interference, including interference that may cause undesired operation of the device.

CAUTION

■Tire pressure warning system operation

The tire pressure warning system may not provide warning immediately if a tire bursts or if sudden air leakage occurs.

■When inspecting or replacing tires

Observe the following precautions to prevent accidents. Failure to do so may cause damage to parts of the drive train, as well as dangerous handling characteristics, which may lead to fatal or injury accidents.

- Do not mix tires of different makes, models, tread patterns or tread–wear.
- Do not use tire sizes other than those recommended by Toyota.
- Do not mix radial, bias–belted, or bias–ply tires.
- Do not mix summer, all season and winter tires.
- Do not use tires that have been used on another vehicle.
- Do not use tires if you do not know how they were used previously.

NOTICE

■Repairing or replacing tires, wheels and tire pressure warning valves and transmitters

When removing or fitting the wheels, tires or the tire pressure warning valve and transmitter, contact your Toyota dealer as the tire pressure warning valve and transmitter may be damaged if not handled correctly.

■Do not use puncture sealant sprays to repair flats

Puncture sealant sprays may damage tire pressure warning valves and transmitters.

■Driving on rough roads

Take particular care when driving on roads with loose surfaces or pot–holes.
These conditions may cause losses in tire inflation pressure, reducing the cushioning ability of the tires. In addition driving on rough roads may cause damage to the tires themselves, as well as the vehicle's wheels and body.

■If tire inflation pressures become low while driving

Do not continue driving, or your tires and/or wheels may be ruined.

Tire inflation pressure

Tire inflation pressure

The recommended cold tire inflation pressure and tire size is displayed on the tire and loading information label. (P. 370)

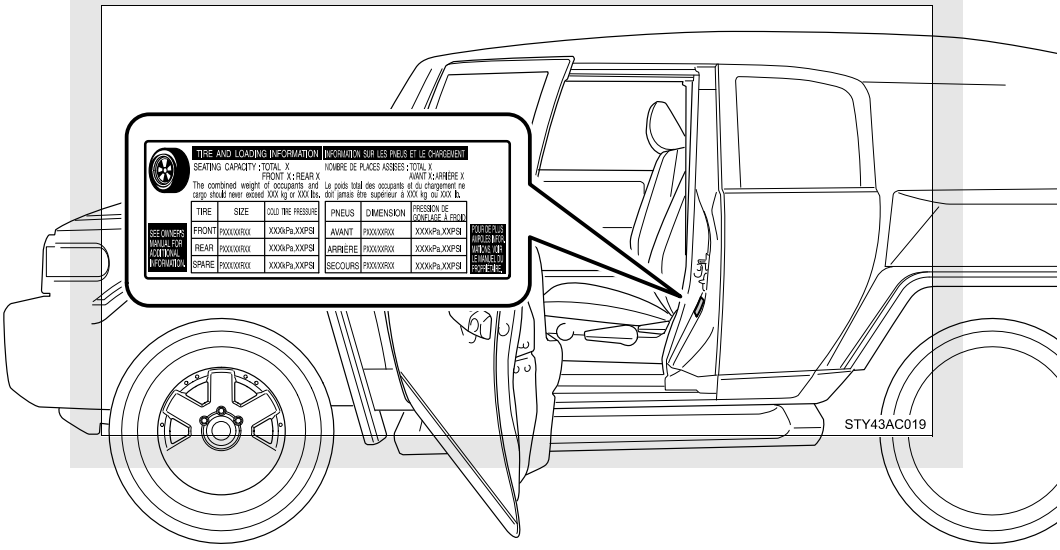

■ **Inspection and adjustment procedure**

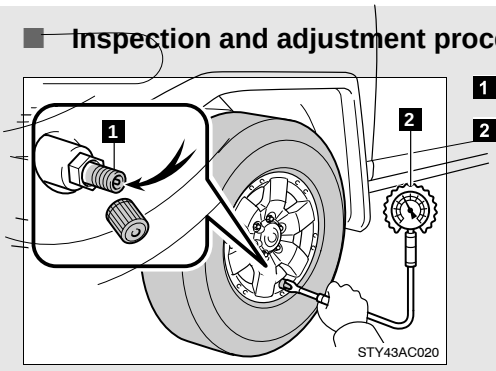

1 Tire valve

2 Tire pressure gauge

STEP 1 Remove the tire valve cap.

STEP 2 Press the tip of the tire pressure gauge onto the tire valve.

STEP 3 Read the pressure using the graduations of the gauge.

STEP 4 If the tire inflation pressure is not within the recommended levels, adjust inflate the tire.
If you add too much air, pres s the center of the valve to lower.

STEP 5 After completing the tire inflation pressure measurement and adjustment, apply soapy water to the valve and check for leakage.

STEP 6 Reinstall the tire valve cap.

■**Tire inflation pressure check interval**

You should check tire pressure every two weeks, or at least once a month.
Do not forget to check the spare.

■**Effects of incorrect tire inflation pressure**

Driving with incorrect tire inflation pressure may result in the following:

●Reduced fuel efficiency

●Reduced driving comfort and tire life

●Reduced safety

●Damage to the drive train

If a tire needs frequent refilling, have it checked by your Toyota dealer.

Instructions for checking tire inflation pressure

When checking tire inflation pressure, observe the following:

- Check only when the tires are cold.
  If your vehicle has been parked for at least 3 hours and has not been driven for more than 1 mile or 1.5 km, you will get an accurate cold tire inflation pressure reading.
- Always use a tire pressure gauge.
  The appearance of the tire can be mi sleading. In addition, tire infla–tion pressures that are even just a few pounds off can degrade ride and handling.
- Do not bleed or reduce tire inflation pressure after driving. It is normal for the tire inflation pressure to be higher after driving.
- Never exceed the vehicle capacity weight.
  Passengers and luggage weight should be placed so that the vehicle is balanced.

CAUTION

Proper inflation is critical to save tire performance

Keep your tires properly inflated.
Otherwise, the following conditions may occur and result in an accident causing death or serious injury.

- Excessive wear
- Uneven wear
- Poor handling
- Possibility of blowouts resulting from overheated tires
- Poor sealing of the tire bead
- Wheel deformation and/or tire separation
- A greater possibility of tire damage from road hazards

NOTICE

When inspecting and adjusting tire inflation pressure

Be sure to reinstall the tire valve caps.
Without the valve caps, dirt or mo isture could get into the valve and cause air leakage, which could result in an accident. If the caps have been lost, replace them as soon as possible.

If a wheel is bent, cracked or heavily corroded, it should be replaced.
Otherwise, the tire may separate from the wheel or cause loss of handling control.

Wheel selection

When replacing wheels, care should be taken to ensure that they are equivalent to those removed in load capacity, diameter, rim width, and offset.
Replacement wheels are available at your Toyota dealer.

Toyota does not recommend using:

- Wheels of different sizes or types
- Used wheels
- Bent wheels that have been straightened

Aluminum wheel precautions (if equipped)

- Use only Toyota wheel nuts and wrench designed for use with your aluminum wheels.
- When rotating, repairing or changing your tires, check that the wheel nuts are still tight after driving 1000 miles (1600 km).
- Be careful not to damage the aluminum wheels when using tire chains.
- Use only Toyota genuine balance weights or equivalent and a plastic or rubber hammer when balancing your wheels.

When replacing wheels

The wheels of your Toyota are equipped with sensors that allow the tire pressure warning system sensors to provide advanced warning in the event of a loss in tire inflation pressure. Whenever wheels are replaced, the tire pressure warning valve and transmitter must be switched over from the old wheels. (P. 288)

CAUTION

When replacing wheels

- Do not use wheels that are a different size from those recommended in the Owner's Manual, as this may result in loss of handling control.
- Never use an inner tube in a leaking wheel which is designed for a tubeless tire. Doing so may result in an accident, causing death or serious injury.

NOTICE

Replacing tire pressure warning valves and transmitters

- Because tire repair or replacement may affect the tire pressure warning valves and transmitters, make su re to have tires serviced by your Toyota dealer or other qualified service shop. In addition, make sure to purchase your tire pressure warning valves and transmitters at your Toyota dealer.
- Ensure that only Genuine Toyota wheels are used on your vehicle. Tire pressure warning valves and transmitters may not work properly with non–genuine wheels.

Air conditioning filter

The air conditioning filter must be cleaned or changed regularly to maintain air conditioning efficiency.

Removal method

STEP 1 Turn the engine switch off.

STEP 2

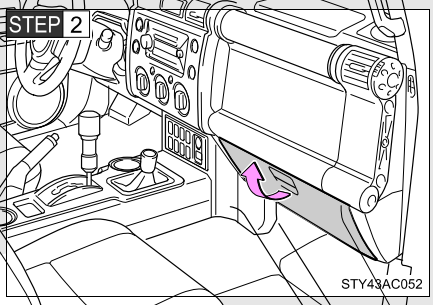

Open the glove box.

STEP 3

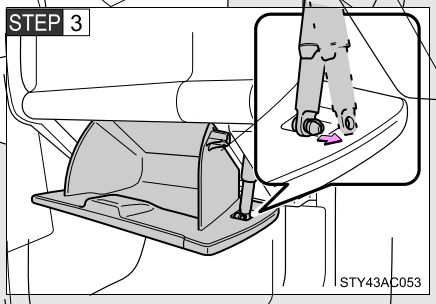

Slide off the damper.

STEP 4

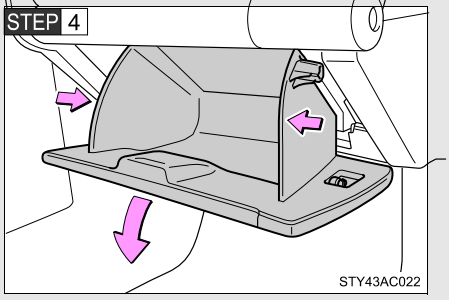

Push in each side of the glove box to disconnect the claws.

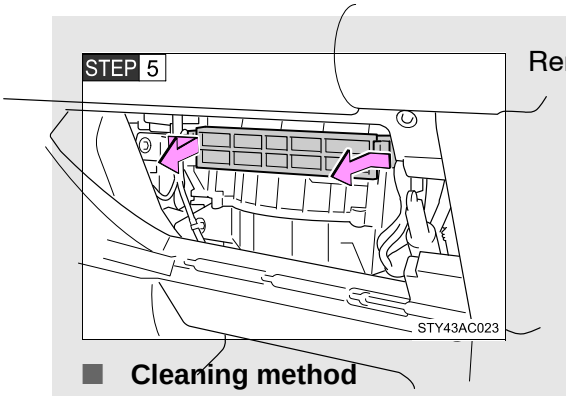

Remove the filter case.

Cleaning method

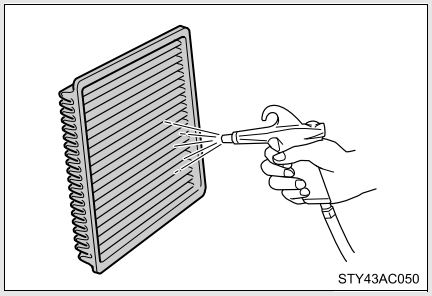

If the filter is dirty, clean by blowing compressed air through the filter from the downward side.

Hold the air gun 2 in. (5 cm) from the filter and blow for approximately 2 minutes at 72 psi (500 kPa, 5.0 kgf/cm^2 or bar).

If it is not available, have the filter cleaned by your Toyota dealer.

Replacement method

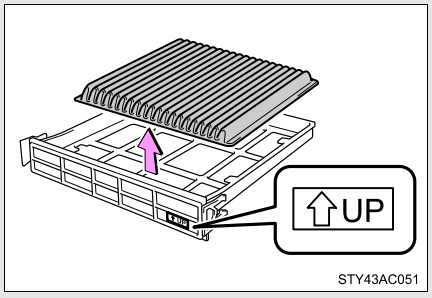

Remove the air conditioning filter and replace it with a new one.

The “ UP” marks shown on the filter should be pointing up.

Checking interval

Inspect, clean and replace the air conditioning filter according to the maintenance schedule. In dusty areas or areas with heavy traffic flow, more frequent cleaning or early replacement may be required. (For scheduled maintenance information, please refer to the “Scheduled Maintenance Guide” or “Owner’s Manual Supplement”.)

If air flow from the vents decreases dramatically

The filter may be clogged. Check the filter and replace if necessary.

NOTICE

To prevent damage to the system

- When using the air conditioning system, make sure that a filter is always installed.
- When cleaning the filter, do not clean the filter with water.

Key battery

Replace the battery with a new one if it is discharged.

You will need the following items:

- Small Phillips-head screwdriver
- Lithium battery CR1616

Replacing the battery

STEP 1

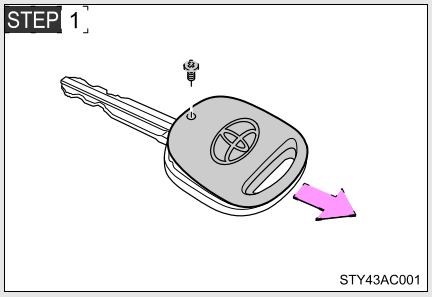

Remove the screw and cover.

Push the cover in the arrow direction.

STEP 2

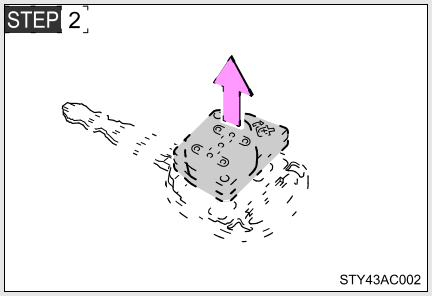

Remove the module.

STEP 3

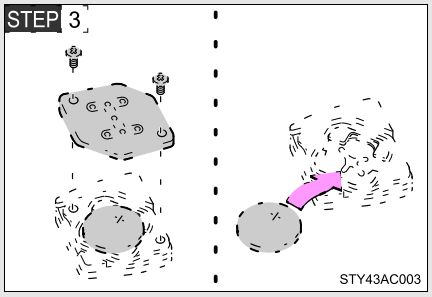

Remove the 2 screws to take out the lid.

Insert a new battery with the "+" terminal facing up.

If the key battery is discharged

The following symptoms may occur.

- The wireless remote control will not function properly.
- The operational range is reduced.

Use a CR1616 lithium battery

- Batteries can be purchased at your Toyota dealer, jewelers, or camera stores.
- Replace only with the same or equivalent type recommended by your Toyota dealer.
- Dispose of used batteries according to the local laws.

CAUTION

Removed battery and other parts

Keep away from children.
These parts are small and if swallowed by a child they can cause choking.

NOTICE

For normal operation after replacing the battery

Observe the following precautions to prevent accidents.

- Always work with dry hands.
  Moisture may cause the battery to rust.
- Do not touch or move any other components inside the remote control.
- Do not bend either of the battery terminals.

Checking and replacing fuses

If any of the electrical componen ts do not operate, a fuse may have blown. If this happens, check and replace the fuses as necessary.

STEP 1 Turn the engine switch off.

STEP 2 The fuses are located in the following places. To check the fuses, follow the instructions below.

■ Engine compartment

▶ Type A

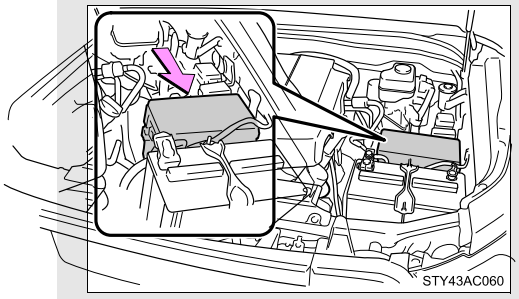

Push the tab in and lift the lid off.

▶ Type B (if equipped)

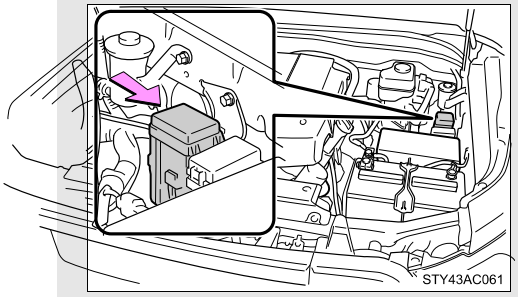

Push the tab in and lift the lid off.

Under the instrument panel

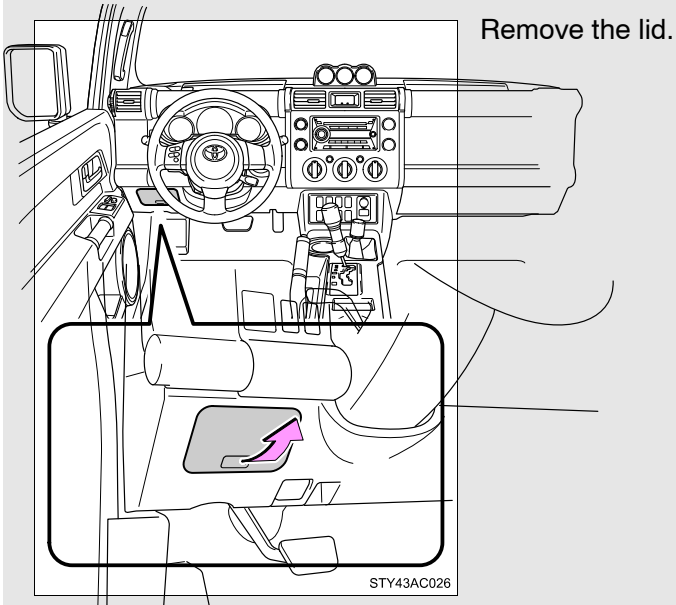

STEP 3 After a system failure, see “Fuse layout and amperage ratings” (P. 307) for details about which fuse to check.

STEP 4

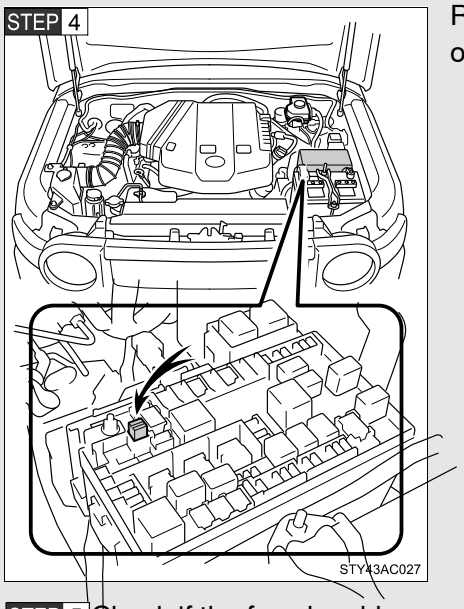

Remove the fuse with the pull–out tool.

STEP 5 Check if the fuse has blown.

▶Type A

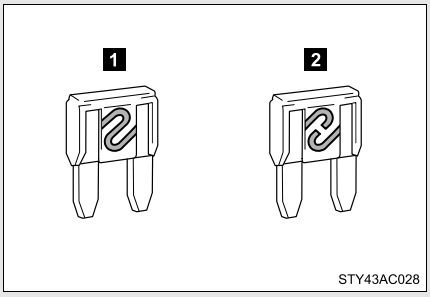

1 Normal fuse

2 Blown fuse

Replace it with one of an appropriate amperage rating. The amperage rating can be found on the fuse box lid.

▶Type B

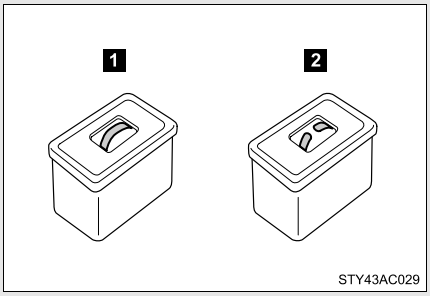

1 Normal fuse

2 Blown fuse

Replace it with one of an appropriate amperage rating. The amperage rating can be found on the fuse box lid.

▶ Type C

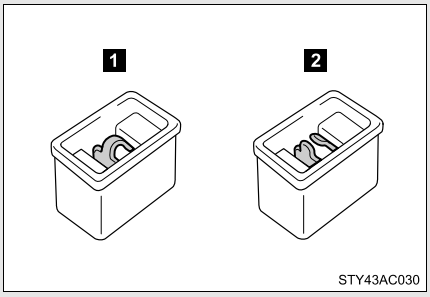

1 Normal fuse

2 Blown fuse

Replace it with one of an appropriate amperage rating. The amperage rating can be found on the fuse box lid

Fuse layout and amperage ratings

■ Engine compartment

▶ **Type A**

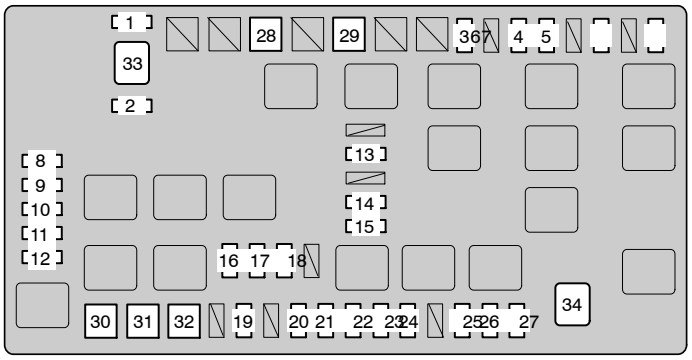

STY43AC031

▶ **Type B (if equipped)**

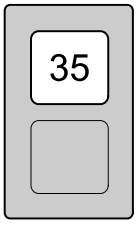

STY43AC032

Fuse		Ampere	Circuit
1	SPARE	10 A	Spare fuse
2	SPARE	15 A	Spare fuse
3	TOWING TAIL	15 A	Trailer lights
4	OFFROAD LP	15 A	Offroad lamp
5	STOP	10 A	Stop lights, high mounted stop–light, anti–lock brake system, traction control system, active traction control system, vehicle stability control system, AUTO LSD system, multiport fuel injection system/ sequential multiport fuel injection system, shift lock system
6	AUX LP	15 A	Driving lamp
7	OBD	7.5 A	On–board diagnosis system
8	HEAD (LO RH)	10 A	Right–hand headlight (low beam)*1
			Right–hand headlight*2
9	HEAD (LO LH)	10 A	Left–hand headlight (low beam)*1
			Left–hand headlight*2
10	HEAD (HI RH)	10 A	Right–hand headlight (high beam)
11	HEAD (HI LH)	10 A	Left–hand headlight (high beam)
12	EFI NO.2	10 A	Multiport fuel injection system/ sequential multiport fuel injection system
13	DRL	7.5 A	Daytime running light system
14	DEFOG	30 A	Rear window defogger
15	DEFOG NO.2	7.5 A	Multiport fuel injection system/ sequential multiport fuel injection system
16	DOME	10 A	Interior light, luggage compartment light, clock, accessory meter, meter and gauge

Fuse		Ampere	Circuit
17	RADIO NO.1	20 A	Audio system
18	ECU−B	10 A	Air conditioning system, multiplex communication system, SRS air−bag system, front passenger occu−pant classification system
19	ALT−S	7.5 A	Charging system
20	HORN	10 A	Horn
21	A/F HEATER	15 A	Multiport fuel injection system/ sequential multiport fuel injection system
22	TRN−HAZ	15 A	Turn signal lights, emergency flashers
23	ETCS	10 A	Multiport fuel injection system/ sequential multiport fuel injection system, electronic throttle control system
24	EFI	20 A	EFI NO.2, multiport fuel injection system/sequential multiport fuel injection system
25	DR/LCK	20 A	Door lock system, multiplex com−munication system
26	TOWING	15 A	Towing converter
27	RADIO NO.2	20 A	Audio system
28	AM1	50 A	ACC, ECU−IG, IG1, RR WSH, FR WIP−WSH, 4WD/DIFF and STA
29	J/B	50 A	TAIL, PWR OUTLET, POWER
30	ABS MTR	40 A	Anti−lock brake system, vehicle sta−bility control system, traction con−trol system, active traction control system, AUTO LSD system

Fuse		Ampere	Circuit
31	AM2	30 A	IGN and GAUGE, multiport fuel injection system/sequential multi–port fuel injection system, starting system
32	ABS SOL	30 A	Anti–lock brake system, vehicle stability control system, traction control system, active traction control system, AUTO LSD system
33	ALT	120 A	AM1, AC 115V, DEFOG, DEFOG NO.2, STOP, OBD, J/B, TOWING TAIL, AUX LP and OFFROAD LP
34	HEATER	60 A	Air conditioning system
35	AC 115V	80 A	Power outlet

*1: Vehicles with daytime running light

*2: Vehicles without daytime running light

Under the instrument panel

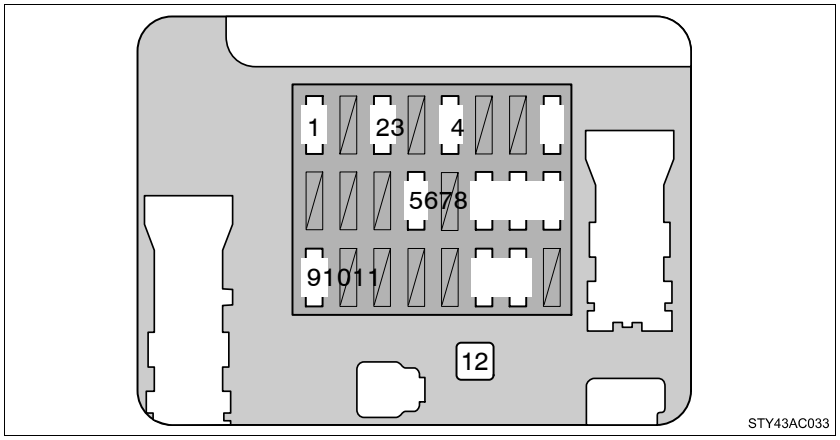

Fuse		Ampere	Circuit
1	IGN	10 A	Multiport fuel injection system/ sequential multiport fuel injection system, anti–lock brake system, vehicle stability control system, traction control system, active traction control system, AUTO LSD system, SRS airbag system, front passenger occupant classification system
2	GAUGE	7.5 A	Meter and gauge
3	FR WIP–WSH	30 A	Windshield wipers and washer
4	4WD/DIFF	20 A	Four–wheel drive system, rear differential lock system
5	PWR OUTLET	15 A	Power outlet
6	RR WSH	15 A	Rear window wiper and washer, multiplex communication system

Fuse		Ampere	Circuit
7	ECU–IG	10 A	Anti–lock brake system, vehicle stability control system, traction control system, active traction control system, AUTO LSD system, multiport fuel injection system/sequential multiport fuel injection system, cruise control system, back door lock system, shift lock system, multiplex communication system
8	IG1	15 A	Turn signal lights, air conditioning system, charging system, clutch start cancel switch, anti–lock brake system, traction control system, active traction control system, vehicle stability control system, AUTO LSD system, back–up lights, intuitive parking assist, rear differential lock system, power outlet, accessory meter, meter and gauge
9	STA	7.5 A	Starting system, clutch start cancel switch, power outlet
10	TAIL	10 A	Tail lights, license plate lights, parking lights, instrument panel light control, illuminations
11	ACC	7.5 A	Shift lock system, outside rear view mirrors, audio system, power outlet, clock, accessory meter, multiplex communication system
12	POWER	30 A	Power windows

After a fuse is replaced

- If the lights do not turn on even after the fuse has been replaced, a bulb may need replacement. (P. 314)
- If the replaced fuse blows again, have the vehicle inspected by your Toyota dealer.

If there is an overload in the circuits

The fuses are designed to blow before the entire wiring harness is damaged.

CAUTION

To prevent system breakdowns and vehicle fire

Observe the following precautions.
Failing to do so may cause damage, and possibly a fire or injury.

- Never use a fuse of a higher amperage rating than indicated, or use any other object in place of a fuse.
- Always use a genuine Toyota fuse or equivalent.
  Never replace a fuse with a wire, even as a temporary fix.
  This can cause extensive damage or even fire.
- Do not modify the fuse or the fuse box.

NOTICE

Before replacing fuses

Have the cause of electrical overload determined and repaired by your Toyota dealer as soon as possible.

You may replace the following bulbs yourself. The difficulty level of replacement varies depending on the bulb. If necessary bulb replacement seems difficult to perform, contact your Toyota dealer.

For more information about replacing other light bulbs, contact your Toyota dealer.

Prepare a replacement light bulb.

Check the wattage of the light bulb being replaced. (P. 371)

Front bulb locations

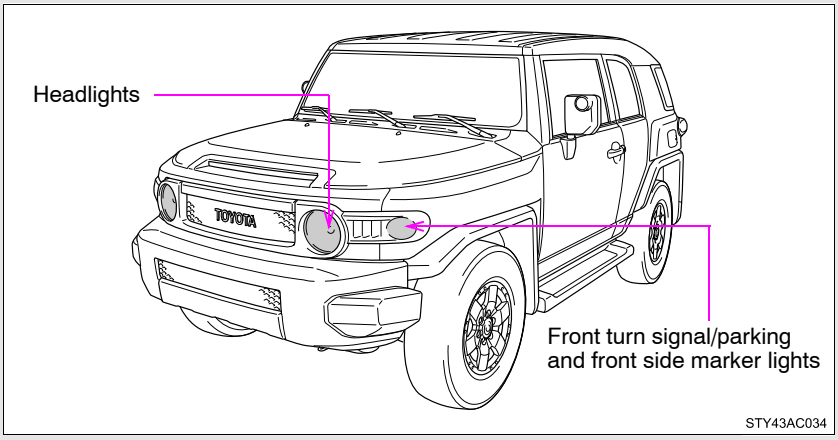

Rear bulb locations

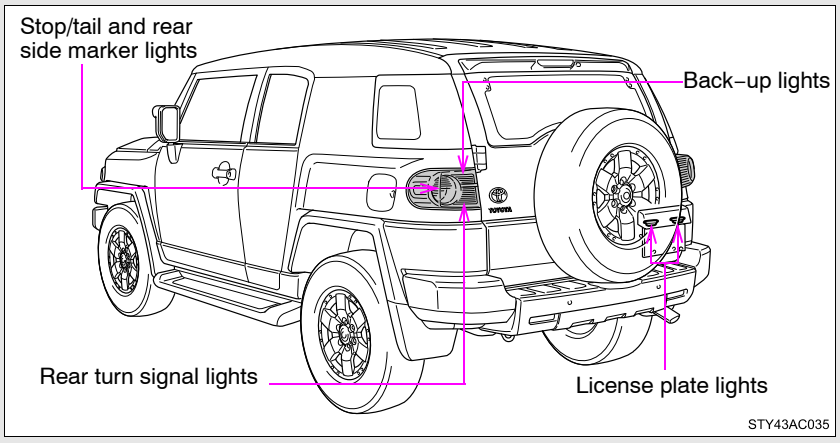

Replacing light bulbs

Headlights

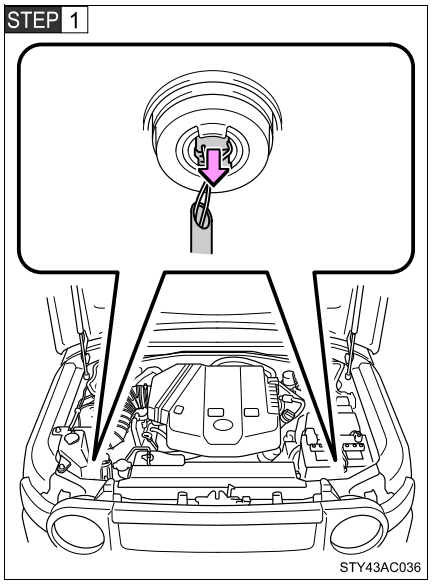

Unplug the connector.

STEP 2

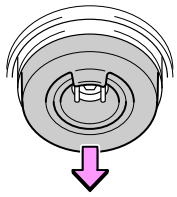

STY43AC037

Remove the rubber cover.

STEP 3

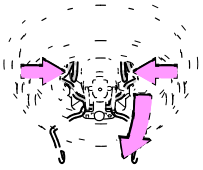

STY43AC038

Release the bulb retaining spring.

STEP 4

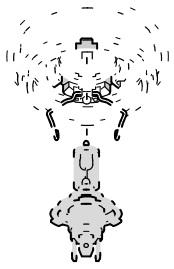

STY43AC055

Remove the bulb.

To install a new bulb, align the tabs of the bulb with the cutouts of the mounting hole.

Front turn signal/parking and front side marker lights

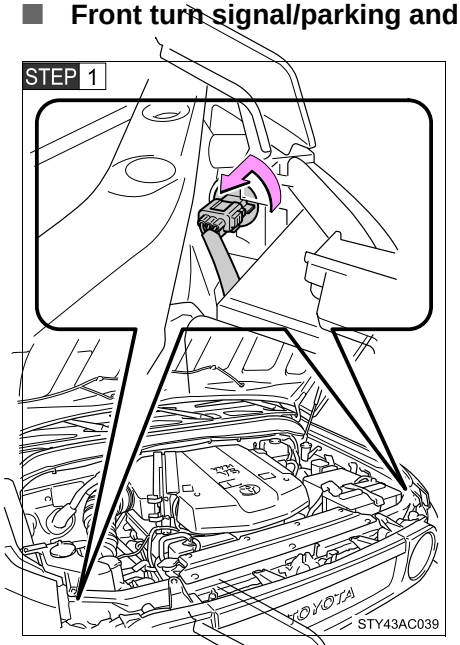

Turn the bulb base counterclock–wise.

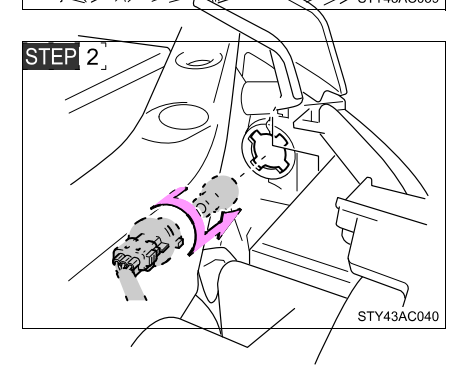

Remove the light bulb.

Back–up lights, stop/tail and rear side marker lights and rear turn signal lights

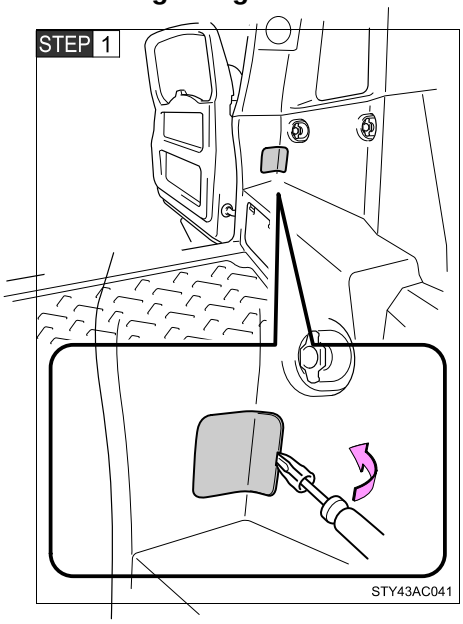

Open the back door and remove the cover.

Using a flathead screwdriver which is wrapped with a cloth.

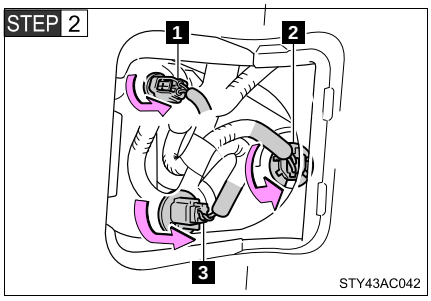

Turn the bulb bases counter–clockwise.

1 Back–up light

2 Stop/tail and rear side marker lights

3 Rear turn signal light

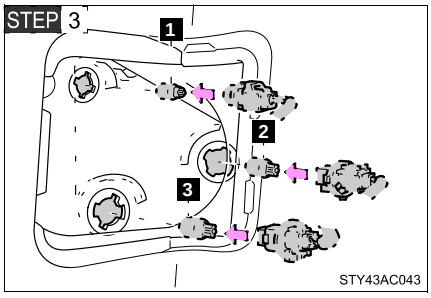

Remove the light bulb.

1 Back–up light

2 Stop/tail and rear side marker lights

3 Rear turn signal light

License plate lights

STEP 1

Remove the screws and cover.

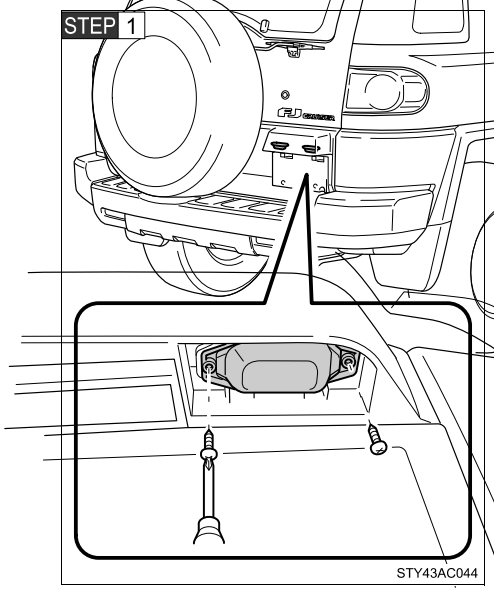

STEP 2

Remove the light bulb.

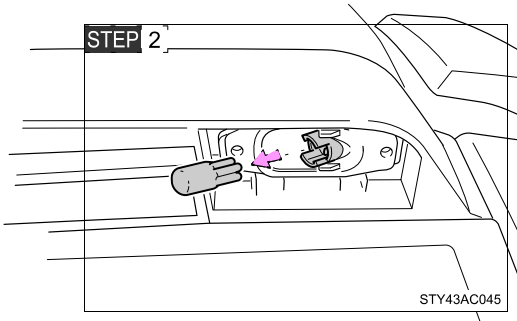

Lights other than the above

If any of the lights listed below has burnt out, have it replaced by your Toyota dealer.

- Outside rear view mirror illumination lights
- High mounted stoplight

Condensation build–up on the inside of the lens

Contact your Toyota dealer for more information in the following situations. Temporary condensation build–up on the inside of the headlight lens does not indicate a malfunction.

- Large drops of water are built up on the inside of the lens.
- Water has built up inside the headlight.

LED high mounted stoplight

The high mounted stoplight consists of a number of LEDs. If any of the LEDs burn out, take your vehicle to your Toyota dealer to have the light replaced.

CAUTION

Replacing light bulbs

- Turn off the headlights. Do not attempt to replace the bulb immediately after turning off the headlights.
  The bulbs become very hot and may cause burns.
- Do not touch the glass portion of the light bulb with bare hands. Hold the bulb by the plastic or metal portion.
  If the bulb is scratched or dropped it may blow out or crack.
- Fully install light bulbs and any parts used to secure them. Failing to do so may result in heat damage, fire, or water entering the headlight unit. This may damage the headlights or cause condensation to build up on the lens.

To prevent damage or fire

Make sure bulbs are fully seated and locked.

If your vehicle needs to be towed

If towing is necessary, we recommen d having your vehicle towed by your Toyota dealer or a commerci al towing service, using a lift−type truck or a flat bed truck.
Use a safety chain system for all to wing, and abide by all state/pro−vincial and local laws.
The wheels and axle on the ground must be in good condition.
If they are damaged, use a towing dolly or flat bed truck.

Before towing

The following may indicate a problem with your transmission. Contact your Toyota dealer before towing.

- The engine is running, but the vehicle will not move.
- The vehicle makes an abnormal sound.

Emergency towing

If a tow truck is not available, in an emergency your vehicle may be temporarily towed using a cable or chain secured to the emergency towing eyelet. This should only attempted on hard, surfaced roads for short distances at low speeds.
A driver must be in the vehicle to steer and operate the brakes. The vehicle's wheels, drive train, axles, steering and brakes must be in good condition.

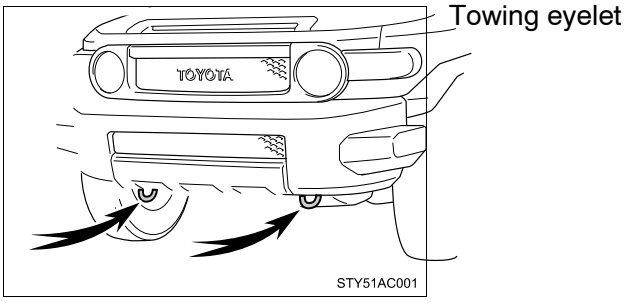

Emergency towing procedure

STEP 1 The engine switch must be in the ACC (engine off) or the ON (engine running) position.

STEP 2 4WD models with an automatic transmission: Shift the front–wheel drive control lever in H2.
4WD models with a manual transmission: Unlock the center differential.

STEP 3 Put the shift lever in N.

STEP 4 Release the parking brake.

CAUTION

Caution while towing

- Use extreme caution when towing the vehicle.
Avoid sudden starts or erratic driving maneuvers which place excessive stress on the emergency towing eyelet and the cables or chains.
- If the engine is not running, the power assist for the brakes and steering will not function, making steering and braking more difficult.

NOTICE

To prevent causing serious damage to the transmission (vehicles with an automatic transmission)

Never tow this vehicle from the rear with the four wheels on the ground. This may cause serious damage to the transmission.

Emergency towing eyelet precautions

- Before emergency towing, check that the eyelet is not broken or damaged.
- Fasten the towing cable or chain securely to the eyelet.
- Do not jerk the eyelet. Apply steady and even force.
- To avoid damaging the eyelet, do not pull from the side or at a vertical angle. Always pull straight ahead.

Towing with a sling–type truck

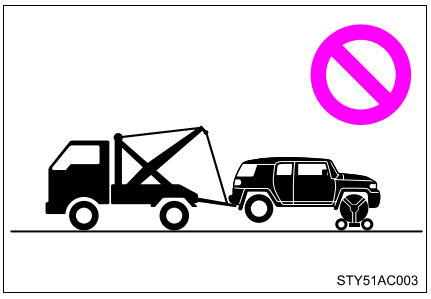

NOTICE

■ **To prevent body damage**

Do not tow with a sling–type truck, either from the front or rear.

Towing with a wheel lift–type truck from the front

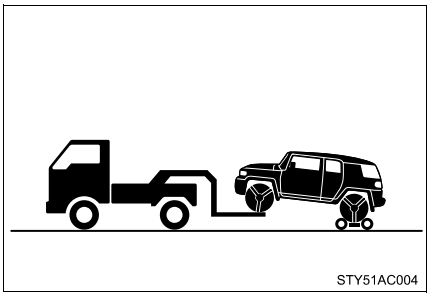

Use a towing dolly under the rear wheels.

NOTICE

■ **To prevent causing serious damage to the transmission**

Never tow this vehicle wheels on the ground.

Towing with a wheel lift−type truck from the rear

▶2WD models

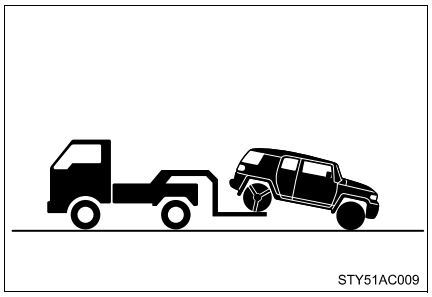

Turn the engine switch to the ACC position.

▶4WD models

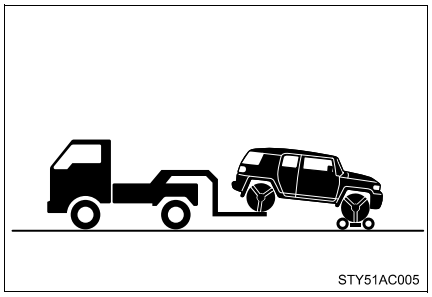

Vehicles with a manual transmission: Use a towing dolly under the front wheels.

Vehicles with an automatic transmission: When not using a towing dolly, turn the engine switch to the ACC position, shift the shift lever to N and shift the front−wheel drive control lever in H2.

⚠ NOTICE

■ **To prevent causing serious damage to the transmission (4WD models)**

Never tow this vehicle wheels on the ground.

■ **To prevent damaging the vehicle**

- Do not tow the vehicle with the key removed or in the LOCK position. The steering lock mechanism is not strong enough to hold the front wheel straight.
- When raising the vehicle, ensure adequate ground clearance for towing at the opposite end of the raised vehicle. Without adequate clearance, the vehicle could be damaged while being towed.

Using a flat bed truck

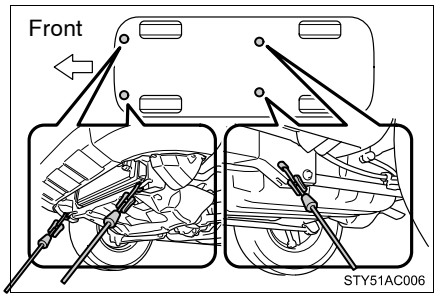

If your Toyota is transported by a flat bed truck, it should be tied down at the locations shown in the illustration.

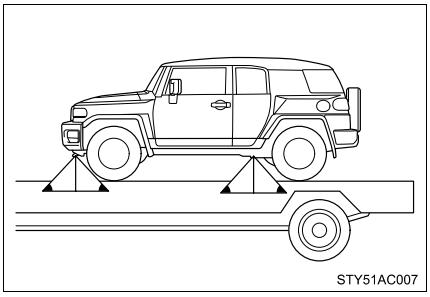

If you use chains or cables to tie down your vehicle, the angles shaded in black must be 45 .

Do not overly tighten the tie downs or the vehicle may be damaged.

Apply the parking brake firmly.

If you think something is wrong

If you notice any of the followin g symptoms, your vehicle probably needs adjustment or repair. Contact your Toyota dealer as soon as possible.

Visible symptoms

- Fluid leaks under the vehicle
  (Water dripping from the air conditioning after use is normal.)
- Flat−looking tires or uneven tire wear
- Engine coolant temperature g auge needle continually points higher than normal
- Voltmeter continually points higher or lower than normal.

Audible symptoms

- Changes in exhaust sound
- Excessive tire squeal when cornering
- Strange noises related to the suspension system
- Pinging or other noises related to the engine

Operational symptoms

- Engine missing, stumbling or running rough
- Appreciable loss of power
- Vehicle pulls heavily to one side when braking
- Vehicle pulls heavily to one side when driving on a level road
- Loss of brake effectiveness, s pongy feeling, pedal almost touches the floor

Fuel pump shut off system

To minimize the risk of fuel leakage when the engine stalls or an air−bag inflates upon collision, the fuel pump shut off system stops supplying fuel to the engine.

Follow the procedure below to restart the engine after the system is activated.

STEP 1 Turn the engine switch to the ACC or LOCK position.

STEP 2 Restart the engine.

NOTICE

Before starting the engine

Inspect the ground under the vehicle.
If you find that fuel has leaked onto the ground, the fuel system has been damaged and is in need of repair. Do not restart the engine.

Event data recorder

Your vehicle has computers that monitor and control certain aspects of your vehicle. These computers assi st in driving and maintaining optimal vehicle performance.

Besides storing data useful for tr oubleshooting, there is an event data recorder (EDR) that records data in a crash or a near car crash event.

In a crash or a near car crash event

The SRS airbag sensor assembly contains the EDR. In a crash or a near car crash event, this device may record some or all of the following information:

- Engine speed
- Whether the brake pedal was applied or not
- Vehicle speed
- To what extent the accelerator pedal was depressed
- Position of the transmission shift lever
- Whether the driver and front passenger wore seat belts or not
- Driver's seat position
- Front passenger's occupant classification
- SRS airbag deployment data
- SRS airbag system diagnostic data

Your Toyota's Electronic Contro l Unit (ECU) may contain another EDR. There are a variety of driving situations which include activating the VSC under which the VSC EDR will record certain information. The VSC EDR may record some or all of the following information:

- Behavior of the vehicle
- Steering wheel angle

- Vehicle speed
- To what extent the accelerator pedal was depressed
- To what extent the brake pedal was applied
- To what extent the ECU controlled the condition of the 4 wheels
- Vehicle stability control system diagnostic data

The information above is intended to be used for the purpose of improving vehicle safety performance. Unlike general data recorders, the EDR does not record sound data such as conversation between passengers.

Disclosure of the data

Toyota will not disclose the data re corded in an EDR to a third party except when:

- An agreement from the vehicle's owner (or the leasing company for a leased vehicle) is obtained
- Officially requested by the police or other authorities
- Used as a defense for Toyota in a law suit
- Ordered by a court of law

However, if necessary Toyota will:

- Use the data for research on Toyota vehicle safety performance
- Disclose the data to a third party for research purposes without disclosing details of the vehicle owner, and only when it is deemed necessary
- Disclose summarized data cleared of vehicle identification information to a non-Toyota organization for research purposes

Calmly perform the following actions if any of the warning lights turn on or flash. If a light turns on or flashes, but then turns off, this does not necessarily indicate a malfunction in the system.

Stop the vehicle immediately. Continuing to drive the vehicle may be dangerous.

The following warning indicates a possible problem in the brake system. Immediately stop the vehicle in a safe place and contact your Toyota dealer.

Warning light	Warning light/Details
BRAKE	**Brake system warning light** • Low brake fluid • Malfunction in the brake system This light also comes on when the parking brake is not released. If the light turns off after the parking brake is fully released, the system is operating normally.

Stop the vehicle immediately.

The following warnings indicate the possibility of damage to the vehicle that may lead to an accident. Immediately stop the vehicle in a safe place and contact your Toyota dealer.

Warning light	Warning light/Details
	Charging system warning light Indicates a malfunction in the vehicle's charging system.
	Low engine oil pressure warning light Indicates that the engine oil pressure is too low*.

*: The light may come on when the oil level is extremely low. It is not designed to indicate low oil level, and the oil level must be checked using the engine oil level dipstick.

Have the vehicle inspected immediately.

Failing to investigate the cause of the following warnings may lead to the system operating abnormally and possibly cause an accident. Have the vehicle inspected by your Toyota dealer immediately.

Warning light	Warning light/Details
CHECK	**Malfunction indicator lamp** Indicates a malfunction in: • The electronic engine control system; • The electronic throttle control system; • The electronic automatic transmission control system; or • Emission control system.
	SRS warning light Indicates a malfunction in: • The SRS airbag system; • The front passenger occupant classification system; or • The seat belt pretensioner system.

Warning light	Warning light/Details
ABS (U.S.A.) (ABS) (Canada)	**ABS warning light** Indicates a malfunction in: • The ABS; or • The brake assist system.
VSC TRAC	**VSC/TRAC warning light** Indicates a malfunction in: • The vehicle stability control system; • The traction control system; • The active traction control system (if equipped); or • The AUTO LSD system (2WD models).
A/T OIL TEMP (Automatic transmis−sion vehicles)	**Automatic transmission fluid temperature warn−ing light** Indicates that the automatic transmission fluid tem−perature is too high.
A/T P (if equipped)	**Unengaged “Park” warning light** Malfunction in the transmission “Park” mechanism.

Follow the correction procedures.

After taking the specified steps to correct the suspected problem, check that the warning light turns off.

Warning light	Warning light/Details	Correction procedure
	Open door warning light Indicates that a door, back door or glass hatch is not fully closed.	Check that all doors and glass hatch are closed.
(On the instrument cluster)	**Driver's seat belt reminder light (warning buzzer)*1** Warns the driver to fasten his/her seat belt.	Fasten the seat belt.
PASSENGER (On the center panel)	**Front passenger's seat belt reminder light (warning buzzer)*2** Warns the front passenger to fasten his/her seat belt.	Fasten the seat belt.
	Tire pressure warning light • When the light comes on: Indicates low tire inflation pressure. • When the light stays on after blinking for 1 minute: Indicates a malfunction in the tire pressure warning system.	Adjust the tire inflation pressure. (including spare tire) Have the system checked by your Toyota dealer.

Warning light	Warning light/Details	Correction procedure
	Low fuel level warning light Low level of fuel.	Refuel the vehicle.
MAINT REQD (U.S.A.)	**Engine oil replacement reminder light** • Illuminates for about 3 seconds and then flashes for about 12 seconds: Indicates that the engine oil is scheduled to be changed. • Comes on and remains: Indicates that the engine oil should be changed.	Check the engine oil, and change if necessary. Check and change the engine oil.

*1: Driver's seat belt reminder:

The driver's seat belt reminder sounds to alert the driver that his or her seat belt is not fastened. Once the engine switch is turned to the ON or START position, the buzzer sounds for 6 seconds. If the vehicle has reached a speed of at least 12 mph (20 km/h), the buzzer sounds intermittently for 10 seconds. Then, if the seat belt is still unfastened, the buzzer will sound in a different tone for 20 more seconds.

*2: Front passenger's seat belt reminder:

The front passenger's seat belt reminder sounds to alert the front passenger that his or her seat belt is not fastened. The buzzer sounds intermittently for 10 seconds after the vehicle has reached a speed of at least 12 mph (20 km/h). Then, if the seat belt is still unfastened, the buzzer will sound in a different tone for 20 more seconds.

Key reminder buzzer

The buzzer indicates that the key has not been removed (with the engine switch in the ACC or LOCK position and the driver's door opened).

If the malfunction indicator lamp comes on while driving

First check the following:

- Is your vehicle low on gas?
  If it is, refuel the vehicle immediately.
- Is the fuel tank cap loose?
  If it is, tighten it securely.

The light will go off after taking several driving trips.
If the light does not go off even after several trips, contact your Toyota dealer as soon as possible.

Front passenger detection sensor and passenger seat belt reminder

If luggage or other load is placed on the front passenger seat, depending on its weight, the reminder light to flash and buzzer to sound.

When the tire pressure warning light comes on

Check the tire inflation pressure and adjust to the appropriate level.

The tire pressure warning light may turn on due to natural causes

The tire pressure warning light may turn on due to natural causes such as natural air leaks or tire inflation pressure changes caused by temperature. In this case, adjusting the tire inflation pressure will turn off the warning light after a few minutes.

When a tire is replaced with a spare tire

The spare tire is also equipped with the tire pressure warning valve and transmitter. The tire pressure warning light will turn on if the tire inflation pressure of the spare tire is low. If a tire goes flat, even though the flat tire is replaced with the spare tire, the warning light does not turn off. Replace the spare tire with the repaired tire and adjust the proper tire inflation pressure. The tire pressure warning light will turn off after a few minutes.

■ If the tire pressure warning system is inoperative

The tire pressure warning system may become inoperative in the following conditions:
(When the condition becomes normal, the system will work properly.)

- If tires not equipped with tire pressure warning valves and transmitters are used.
- If the ID code on the tire pressure warning valves and transmitters is not registered in the tire pressure warning computer.
- If electronic devices or facilities us ing similar radio wave frequencies are nearby.
- If a radio set at similar frequencies is in use in the vehicle.
- If a window tint that affects the radio wave signals is installed.
- If there is a lot of snow or ice on the vehicle, in particular around the wheels or wheel housings.
- If non−genuine Toyota wheels are used.
- If tire chains are used.
- If the spare tire is in a location subject to poor radio wave signal reception.
- If the tire inflation pressure is more than 73 psi (500 kPa, 5.1 kgf/cm^2 or bar) or higher.

■ If the tire pressure warning light comes on after blinking for 1 minute frequently

If the tire pressure warning light comes on after blinking for 1 minute frequently when the engine switch is turned to the ON position, have it checked by your Toyota dealer.

■ After changing the engine oil (U.S.A. only)

Make sure to reset the oil maintenance data. (P. 278)

■ Customization that can be configured at Toyota dealer

The vehicle speed linked seat belt reminder buzzer can be disabled.
(Customizable features P. 386)

CAUTION

Maintenance of the tire

Each tire, including the spare (if provided), should be checked monthly when cold and inflated to the inflation pressure recommended by the vehicle manufacturer on the vehicle placard or tire inflation pressure label (tire and load information label). (If your vehicle has tires of a different size than the size indicated on the vehicle placard or tire inflation pressure label [tire and load information label], you should determine the proper tire inflation pressure for those tires.)

As an added safety feature, your vehicle has been equipped with a tire pressure monitoring system (TPMS-tire pressure warning system) that illuminates a low tire pressure telltale (tire pressure warning light) when one or more of your tires is significantly under-inflated. Accordingly, when the low tire pressure telltale (tire pressure warning light) illuminates, you should stop and check your tires as soon as possible, and inflate them to the proper pressure. Driving on a significantly under-inflated tire causes the tire to overheat and can lead to tire failure. Under-inflation also reduces fuel efficiency and tire tread life, and may affect the vehicle's handling and stopping ability.

Please note that the TPMS (tire pressure warning system) is not a substitute for proper tire maintenance, and it is the driver's responsibility to maintain correct tire pressure, even if under-inflation has not reached the level to trigger illumination of the TPMS low tire pressure telltale (tire pressure warning light).

Your vehicle has also been equipped with a TPMS (tire pressure warning system) malfunction indicator to indicate when the system is not operating properly. The TPMS (tire pressure warning system) malfunction indicator is combined with the low tire pressure telltale (tire pressure warning light). When the system detects a malfunction, the telltale will flash for approximately one minute and then remain continuously illuminated. This sequence will continue upon subsequent vehicle start-ups as long as the malfunction exists. When the malfunction indicator is illuminated, the system may not be able to detect or signal low tire pressure as intended.

CAUTION

TPMS (tire pressure warning system) malfunction may occur for a variety of reasons, including the installation of replacement or alternate tires or wheels on the vehicle that prevent the TPMS (tire pressure warning system) from functioning properly. Always check the TPMS (tire pressure warning system) malfunction te lltale after replacing one or more tires or wheels on your vehicle to ensure that the replacement or alternate tires and wheels allow the TPMS (tire pressure warning system) to continue to function properly.

■If the tire pressure warning light comes on

Be sure to observe the following precautions. Failure to do so could cause loss of vehicle control and result in death or serious injury.

- Stop your vehicle in a safe place as soon as possible. Adjust the tire inflation pressure immediately.
- If the tire pressure warning light comes on even after tire inflation pressure adjustment, it is probable that you have a flat tire. Check the tires. If the tire is flat, change to the spare tire and have the flat tire repaired by the nearest Toyota dealer.
- Avoid abrupt maneuvering and braking. If the vehicle tires deteriorate, you could lose control of the steering wheel or the brakes.

■If a blowout or sudden air leakage should occur

The tire pressure warning system may not activate immediately.

NOTICE

■Precaution when installing a different tire

When a tire of a different specification or maker is installed, the tire pressure warning system may not operate properly.

Remove the flat tire and replace it with the spare provided.

Before jacking up the vehicle

- Stop the vehicle on a hard, flat surface.
- Set the parking brake.
- Shift the shift lever to P (automatic transmission) or R (manual transmission).
- Stop the engine.
- Turn on the emergency flashers.

Location of the spare tire, jack and tools

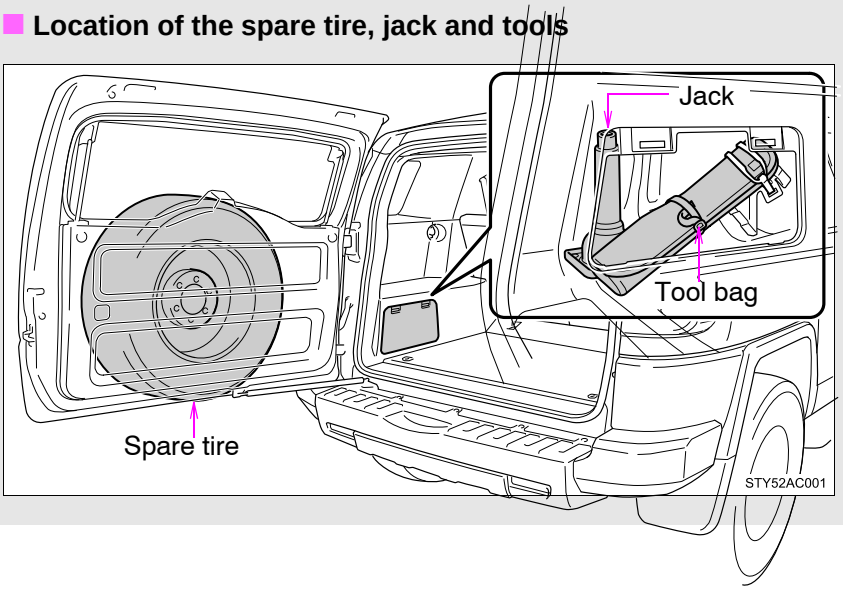

Taking out the jack and tool bag

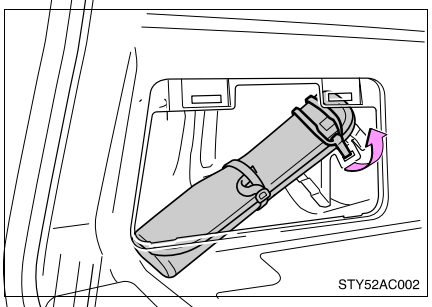

Remove the cover and loosen the strap.

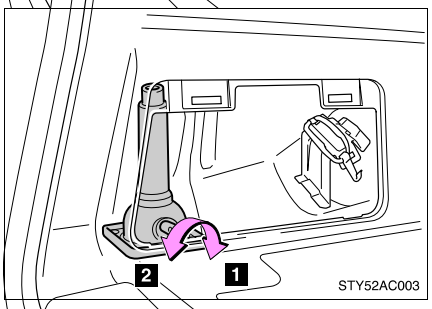

1 Tighten

2 Loosen

Taking out the spare tire

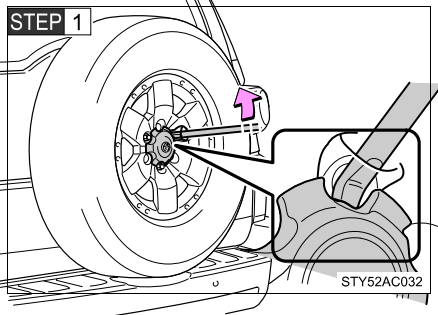

Vehicles with an aluminum wheel, remove the wheel ornament.

To protect the wheel and wheel ornament, place a rag between the wrench and the wheel ornament, as shown in the illustration.

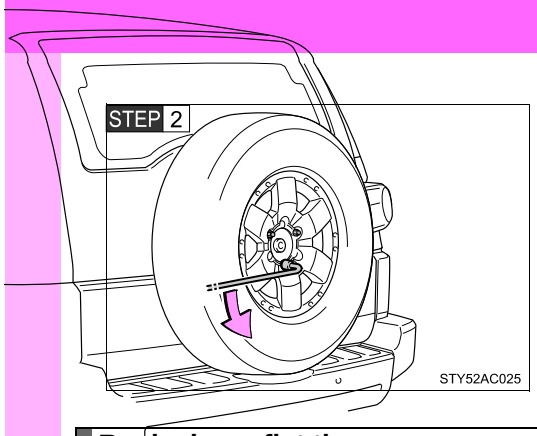

Turn the hold–down nuts counter–clockwise with the wheel nut wrench and remove them.

Replacing a flat tire

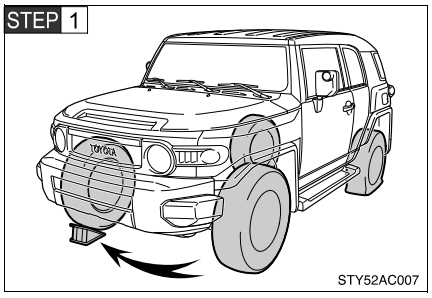

Chock the tires.

Flat tire		Wheel chock positions
Front	Left–hand side	Behind the rear right–hand side tire
	Right–hand side	Behind the rear left–hand side tire
Rear	Left–hand side	In front of the front right–hand side tire
	Right–hand side	In front of the front left–hand side tire

▶ Aluminum

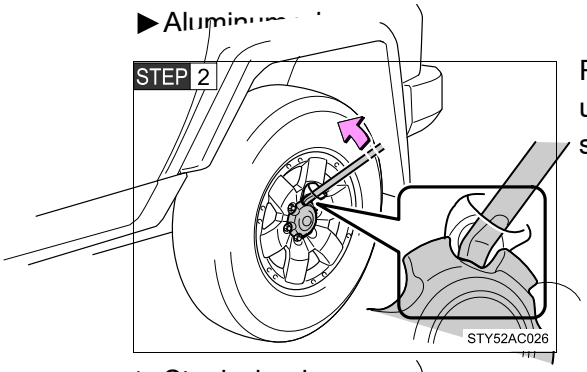

Remove the wheel ornament using the wheel nut wrench as shown.

To protect the wheel and wheel ornament, place a rag between the wrench and the wheel ornament, as shown in the illustration.

▶ Steel wheel

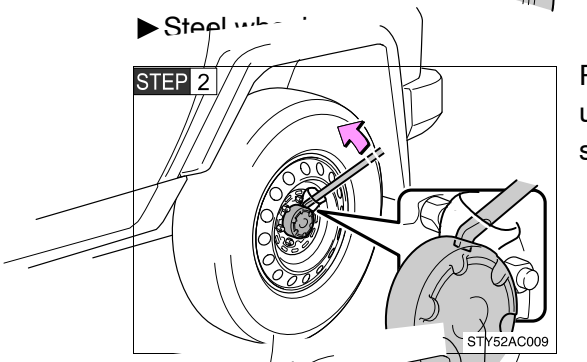

Remove the wheel ornament using the wheel nut wrench as shown.

To protect the wheel and wheel ornament, place a rag between the wrench and the wheel ornament, as shown in the illustration.

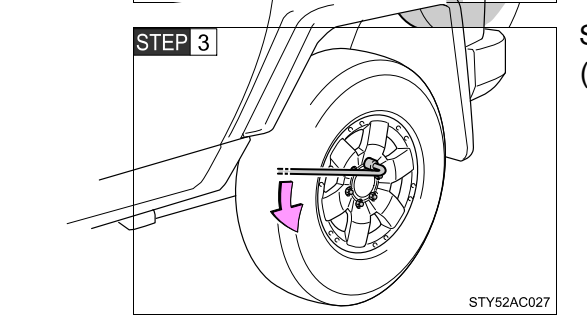

Slightly loosen the wheel nuts (one turn).

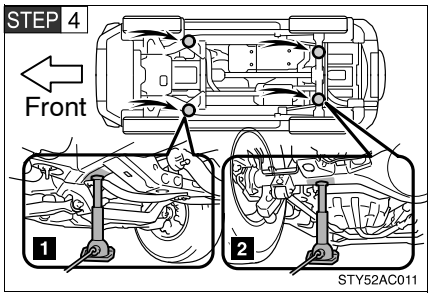

Position the jack at the correct jack point as shown.

1 Front

2 Rear

Make sure the jack is positioned on a level and solid place.

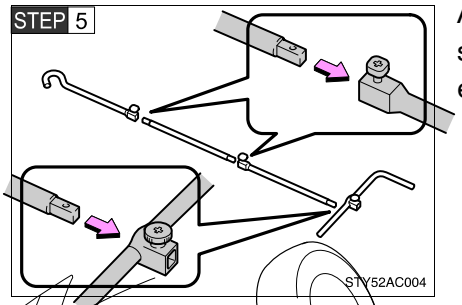

Assemble the jack handle extension as shown. Be sure to tighten each bolt securely.

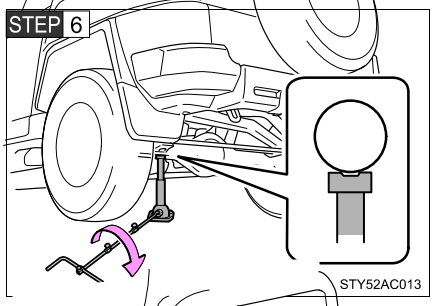

Raise the vehicle until the tire is slightly raised off the ground.

When positioning the jack under the rear axle housing, make sure the groove on the top of the jack fits with the rear axle housing.

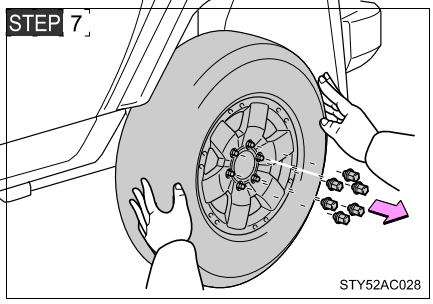

Remove all the wheel nuts and the tire.

When resting the tire on the ground, place the tire so that the wheel design faces up to avoid scratching the wheel surface.

Installing the tire

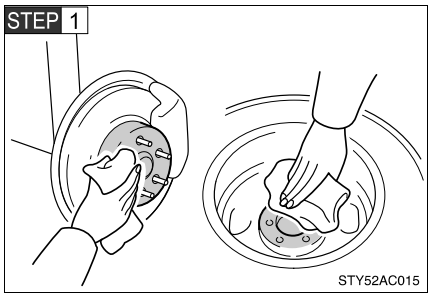

Remove any dirt or foreign matter from the wheel contact surface.

If foreign matter is on the wheel contact surface, the wheel nuts may loosen while the vehicle is in motion, and the tire may come off the vehicle.

STEP 2 Install the tire and loosely ti ghten each wheel nut by hand by approximately the same amount.

▶Replacing a steel wheel

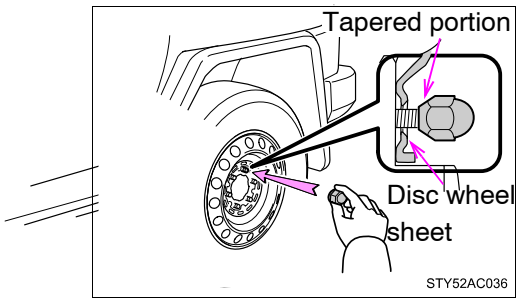

Tighten the nuts until the tapered portion comes into loose contact with the disc wheel sheet.

▶Replacing an aluminum wheel

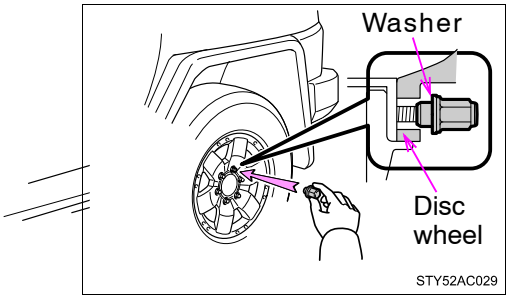

Tighten the nuts until the washer of the nut comes into loose contact with the disc wheel.

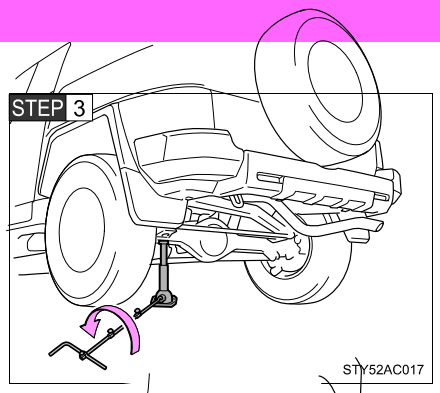

Lower the vehicle.

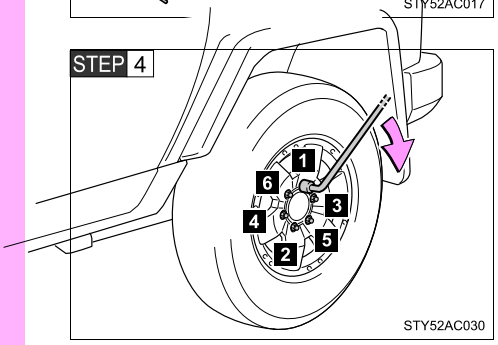

Firmly tighten each nut two or three times in the order shown in the illustration.

Tightening torque:
85 ft·lbf (113 N·m, 11.5 kgf·m)

STEP 5 Reinstall the wheel ornament.

▶ Aluminum wheel

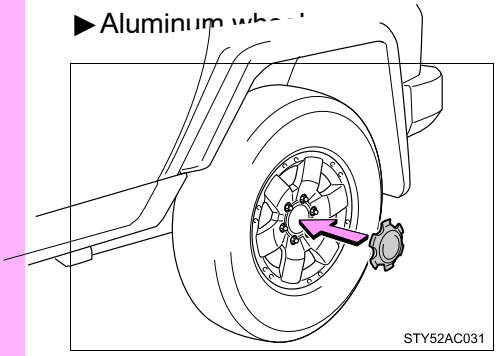

▶Steel wheel

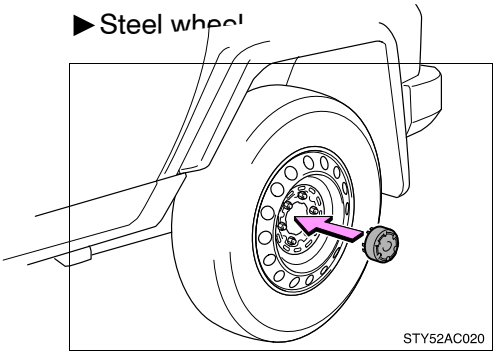

Stowing the flat tire, jack and all tools

STEP 1 Install the flat tire in the reverse order of removal.

Tightening torque:
65 ft·lbf (88 N·m, 8.9 kgf·m)

STEP 2 Stow the tools and jack securely.

⚠ CAUTION

■Using the jack

Improper use of the jack may lead to death or injuries due to the vehicle suddenly falling off the jack.

- Do not use the jack for any purpose other than replacing tires or installing and removing tire chains.
- Only use the jack that comes with this vehicle for replacing a flat tire. Do not use it on other vehicles, an d do not use other jacks for replacing tires on this vehicle.
- Always check that the jack is securely set to the jack point.
- Do not put any part of your body under the vehicle supported by a jack.
- Do not start or run the engine while your vehicle is supported by the jack.
- Do not raise the vehicle while someone is in it.
- When raising the vehicle, do not put an object on or under the jack.
- Do not raise the vehicle to a hei ght greater than that required to replace the tire.

CAUTION

■Using the jack

●Use a jack stand if it is necessary to get under the vehicle.

Take particular care when lowering the vehicle to ensure that no one working on or near the vehicle will be injured.

■Using the jack handle

Tighten all the square head bolts securely to prevent the extension parts from coming apart unexpectedly.

■Replacing a flat tire

Observe the following precautions to reduce the risk of injury.

●Do not try to remove the wheel ornament by hand. Take due care in handling the ornament to avoid unexpected personal injury.

●Never use oil or grease on the wheel bolts or wheel nuts.
The oil or grease can cause the wheel nuts to loosen, causing a serious accident. Remove any oil or grease on the wheel bolts or wheel nuts.

●Have the wheel nuts tightened with a torque wrench to 85 ft·lbf (113 N·m, 11.5 kgf·m) as soon as possible after changing wheels.
Failure to follow these precautions could cause the nuts to loosen and the wheels may fall off, which could lead to an accident causing death or serious injury.

●Do not attach a heavily damaged wheel ornament, as it may fly off the wheel while the vehicle is moving.

NOTICE

■Do not drive the vehicle with a flat tire.

Do not continue driving with a flat tire.
Driving even a short distance with a flat tire can damage the tire and the wheel beyond repair.

■When replacing the tires

- When removing or fitting the wheels, tires or the tire pressure warning valve and transmitter, contact your Toyota dealer as the tire pressure warning valve and transmitter may be damaged if not handled correctly.
- Replace the grommets for the tire pressure warning valves and transmitters as well.

■To avoid damaging the tire pressure warning valves and transmitters

Do not use liquid sealants on flat tires.

■To prevent damage to the wheel ornament (vehicles with a steel wheel)

Do not attach wheel ornament to the wheel on the back door.

If the engine will not start

If the engine still does not start after following the correct starting procedure (P. 114) or releasing the steering lock (P. 115), confirm the following points.

The engine will not start even when the starter motor operates normally.

One of the following may be the cause of the problem.

- There may not be sufficient fuel in the vehicle's tank.
  Refuel the vehicle.
- The engine may be flooded.
  Try to restart the engine once more following correct starting procedures.
- There may be a malfunction inthe engine immobilizer system. (P. 68)

The starter motor turns over slowly, the interior lights and headlights are dim, or the horn does not sound or sounds at a low volume.

One of the following may be the cause of the problem.

- The battery may be discharged. (P. 353)
- The battery terminal connections may be loose or corroded.

The starter motor does not turn over, the interior lights and headlights do not turn on, or the horn does not sound.

One of the following may be the cause of the problem.

- One or both of the battery terminals may be disconnected.
- The battery may be discharged. (P. 353)

Contact your Toyota dealer if the problem cannot be repaired, or if repair procedures are unknown.

If the shift lever cannot be shifted from P

If the shift lever cannot be shifted with your foot on the brake, there may be a problem with the shif t lock system (a system to prevent accidental operation of the shift lever). Have the vehicle inspected by your Toyota dealer immediately.
The following steps may be used as an emergency measure to ensure that the shift lever can be shifted.

STEP 1 Set the parking brake.

STEP 2 Turn the engine switch to the ACC or ON position.

STEP 3 Depress the brake pedal.

STEP 4

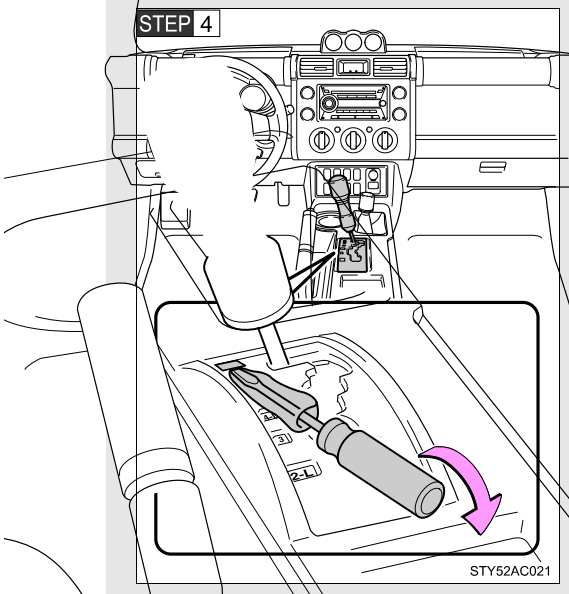

Pry the cover up with a flat−head screwdriver or equiva−lent.

STEP 5

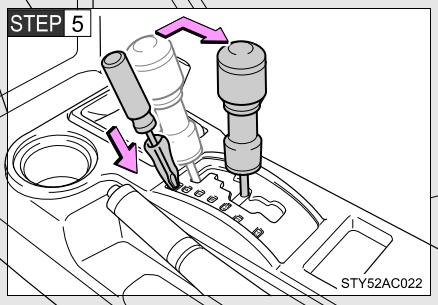

Press the shift lock override button.

The shift lever can be shifted while the button is pressed.

If you lose your keys

New genuine Toyota keys can be made by your Toyota dealer using one of the master keys and the key number stamped on your key number plate. (P. 28)

If you lose all your master keys.

You cannot make new keys; the whole engine immobilizer system must be replaced.

If the vehicle battery is discharged

The following procedures may be u sed to start the engine if the vehicle's battery is discharged.
You can call your Toyota dealer, Roadside Assistance or Toyota Customer Service Assistance.

If you have a set of jumper (or boo ster) cables and a second vehi−cle with a 12−volt battery, you can jump start your Toyota following the steps below.

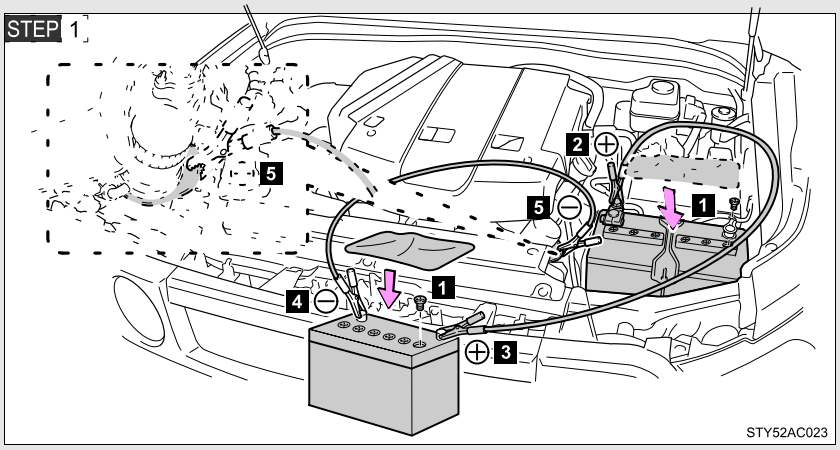

Connecting the jumper cables

1. If required, remove all vent plugs from the booster and dis−charged batteries. Lay a cloth over the open vents on the batter−ies. (This helps reduce the explosion hazard, personal injuries and burns.)
2. Positive (+) battery terminal on your vehicle
3. Positive (+) battery terminal on the second vehicle
4. Negative (−) battery terminal on the second vehicle
5. Connect the jumper cable to ground on your vehicle as shown in the illustration.

STEP 2 Start the engine of the second vehicle. Increase the engine speed slightly and maintain at that level for approximately 5 minutes to recharge the battery of your vehicle.

STEP 3 Maintain the engine speed of the second vehicle and start the vehicle's engine.

STEP 4 Once the vehicle's engine has started, remove the jumper cables in the exact reverse order in which they were connected.

STEP 5 If removed, replace all the battery vent plugs.

Once the engine starts, have the vehicle checked at your Toyota dealer as soon as possible.

Avoiding a discharged battery

- Turn off the headlights and the audio system while the engine is turned off.
- Turn off any unnecessary electrical components when the vehicle is running at a low speed for an extended period, such as in heavy traffic, etc.

CAUTION

Avoiding battery fires or explosions

Observe the following precautions to prevent accidentally igniting the flammable gas that may be emitted from the battery.

- Make sure the jumper cable is connected to the correct terminal and that it is not unintentionally in contact with any part other than the intended terminal.
- Do not allow the jumper cables to come into contact with the "+" and "–" terminals.
- Do not smoke, use matches, cigarette lighters or allow open flame near the battery.

CAUTION

Battery precautions

The battery contains poisonous and corrosive acidic electrolyte, while related parts contain lead and lead compounds. Observe the following precautions when handling the battery.

- When working with the battery, always wear safety glasses and take care not to allow any battery fluids (acid) to come into contact with skin, clothing or the vehicle body.
- Do not lean over the battery.
- In the event that battery fluid comes into contact with the skin or eyes, immediately wash the affected area with water and seek medical attention. Place a wet sponge or cloth over the affected area until medical attention can be received.
- Always wash your hands after handling the battery support, terminals, and other battery−related parts.
- Do not allow children near the battery.

NOTICE

To prevent damaging the vehicle

Do not pull− or push−start the vehicle, because the three−way catalytic converter may overheat and become a fire hazard.

When handling jumper cables

Be careful that the jumper cables do not become tangled in the cooling fan or any of the belts when connecting or disconnecting them.

If your vehicle overheats

If your engine overheats:

STEP 1 Stop the vehicle in a safe place and turn off the air conditioning system.

STEP 2 Check to see if steam is coming out from under the hood.

If you see steam:

Stop the engine and carefully lift the hood.

If you do not see steam:

Leave the engine running and carefully lift the hood.

STEP 3 Check to see if the cooling fan is operating.

If the fan is operating:

Wait until the temperature of the engine (shown on the instrument cluster) begins to fall and then stop the engine.

If the fan is not operating:

Stop the engine immediately and call your local Toyota dealer.

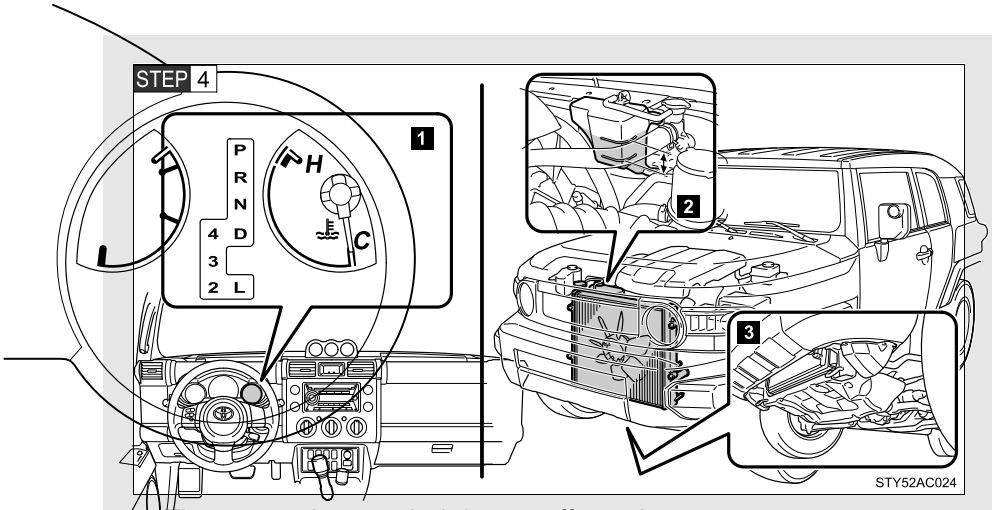

1 The engine has cooled down sufficiently.

The engine coolant temperature gauge indicates C.

2 Check the engine coolant level.

3 Look for obvious coolant leaks from the radiator, hoses and under the vehicle.

Note that water draining from the air conditioning is normal if it has been used.

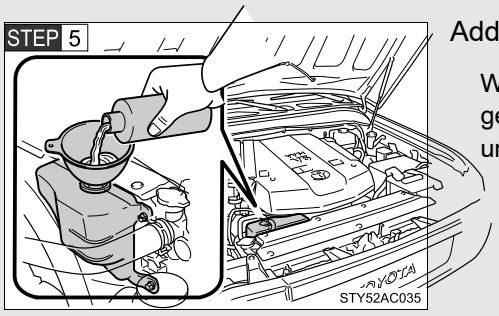

Add engine coolant if required.

Water can be used in an emergency if engine coolant is unavailable. (P. 366)

Have the vehicle checked at your nearest Toyota dealer as soon as possible.

Overheating

If you observe the following, your vehicle may be overheating.

- The engine coolant temperature gauge enters the red zone or a loss of power is experienced.
- Steam is coming from under the hood.

CAUTION

To prevent an accident or injury when inspecting under the hood of your vehicle

- Keep hands and clothing away from the fan and other belts while the engine is running.
- Do not loosen the radiator cap while the engine and radiator are hot. Serious injury, such as burns, may result from hot coolant and steam released under pressure.

NOTICE

When adding engine coolant

Wait until the engine has cooled down before adding engine coolant. When adding coolant, do so slowly. Adding cool coolant to a hot engine too quickly can cause damage to the engine.

If the vehicle becomes stuck

Carry out the following procedures if the tires spin or the vehicle becomes stuck in mud, dirt, or snow.

STEP 1 Stop the engine. Set the parking brake and put the shift lever in P (vehicles with an automatic transmission) or N (vehicles with a manual transmission).

STEP 2 Remove the mud, snow, or sand from around the stuck tire.

STEP 3 Place wood, stones or some other material to help provide traction under the tires.

STEP 4 2WD models: Push the AUTO LSD switch. (P. 150)
4WD models with an automatic transmission: Shift the front−wheel drive control lever to L4. Then push the RR DIFF LOCK switch (if equipped). (P. 152)
4WD models with a manual transmission: Shift the four−wheel drive control lever to LL. Then push the RR DIFF LOCK switch (if equipped). (P. 152)

STEP 5 Carefully apply the accelerator to free the vehicle.

Emergency hook

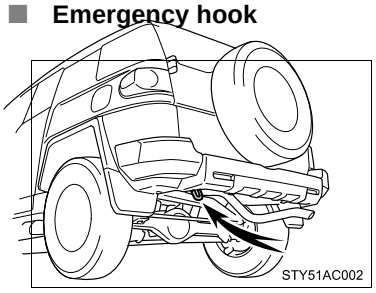

When your vehicle becomes stuck and cannot move, the emergency hook is used for another vehicle to pull your vehi−cle out in an emergency.
Your vehicle is not designed to tow another vehicle.

Do not use the rear hook. It is not designed for towing.

CAUTION

When attempting to free a stuck vehicle

If you choose to rock the vehicle back and forth to free it, make sure the surrounding area is clear, to avoid striki ng other vehicles, objects or persons. The vehicle may also lunge forward or lunge back suddenly as it becomes free. Use extreme caution.

When shifting the shift lever

Vehicles with automatic transmission: Be careful not to shift the shift lever with the accelerator pedal depressed.
This may lead to unexpected rapid acceleration of the vehicle that may cause an accident and result in death or serious injury.

NOTICE

To avoid damaging the transmission and other components

- Avoid spinning the wheels and do not rev the engine.
- If the vehicle remains stuck after trying these procedures, the vehicle may require towing to be freed.

Maintenance data (fuel, oil level, etc.)

Dimensions and weight

Overall length		183.9 in. (4670 mm)
Overall width		75.0 in. (1905 mm)
Overall height*	2WD models	71.3 in. (1810 mm)
	4WD models	72.0 in. (1830 mm)
Wheelbase		105.9 in. (2690 mm)
Front tread		63.2 in. (1605 mm)
Rear tread		63.2 in. (1605 mm)
Vehicle capacity weight (Occupants + luggage)		1190 lb. (540 kg)
Towing capacity (Trailer weight + cargo)		5000 lb. (2265 kg)

*: Unladen vehicle

Vehicle identification

Vehicle identification number

The vehicle identification number (VIN) is the legal identifier for your vehicle. This is the primary identification number for your Toyota. It is used in registering the ownership of your vehicle.

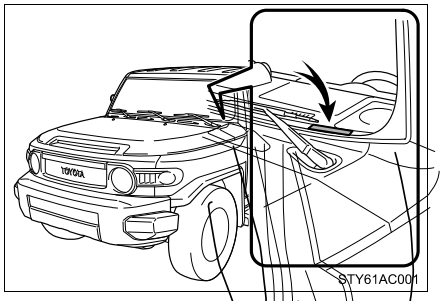

This number is stamped on the top left of the instrument panel.

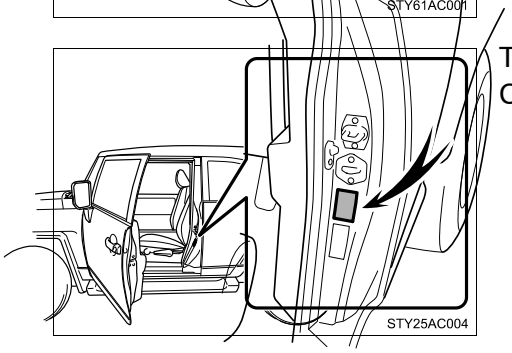

This number is also on the Certification Label.

Engine number

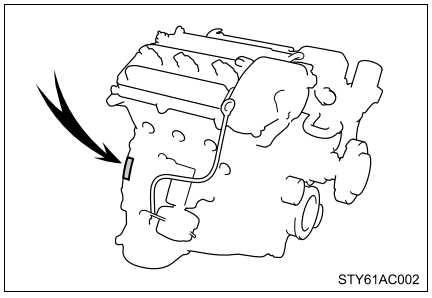

The engine number is stamped on the engine block as shown.

Engine

Model	1GR–FE
Type	6–cylinder V type, 4–cycle, gasoline
Bore and stroke	3.70 3.74 in. (94.0 95.0 mm)
Displacement	241.4 cu.in.(3956 cm^3)
Drive belt tension	Automatic adjustment

Fuel

Fuel type	Unleaded gasoline only
Octane rating	91 (Research octane number 96) or higher
Fuel tank capacity (Reference)	19.0 gal. (72.0 L, 15.8 Imp.gal.)

Lubrication system

Oil capacity drain and refill (Reference) ▶With filter ▶Without filter	 5.5 qt. (5.2 L, 4.6 Imp.qt.) 5.2 qt. (4.9 L, 4.3 Imp.qt.)
Oil grade	ILSAC multigrade engine oil
Recommended oil viscosity	Use Toyota approved “Toyota Genuine Motor Oil” or equivalent to satisfy the grade and viscosity shown below. 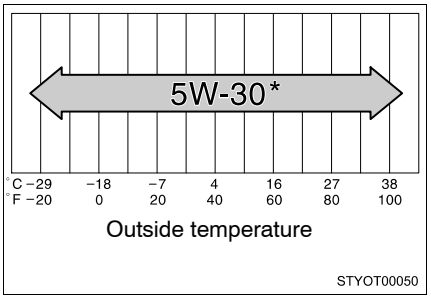

*: 5W−30 is an oil that provides optimal levels of fuel efficiency.

Oil viscosity

- The 5W portion of the oil viscosity rating indicates the characteristic of the oil which allows cold startab ility. Oils with a lower value before the W allow for easier starting of the engine in cold weather.
- The 30 in 5W−30 indicates the oil viscosity when the oil is at its operating temperature. An oil with a higher viscosity may be better suited if the vehicle is operated at high speeds, or under extreme load condition.

Cooling system

Capacity	▶ Vehicles with an automatic transmission 10.4 qt. (9.8 L, 8.6 Imp.qt.) ▶ Vehicles with a manual transmission 9.9 qt. (9.4 L, 8.3 Imp. qt.)
Coolant type	Use either of the following. • “Toyota Super Long Life Coolant” • Similar high−quality ethylene glycol−based non−silicate, non−amine, non−nitrite, and non−borate coolant with long−life hybrid organic acid technology Do not use plain water alone.

Ignition system

Spark plug Make DENSO NGK Gap	 K20HR−U11 LFR6C11 0.043 in. (1.1 mm)

Electrical system

Battery Open voltage at 68 F (20 C):	 12.6 12.8 V Fully charged 12.2 12.4 V Half charged 11.8 12.0 V Discharged (Voltage checked 20 minutes after the key is removed with all the lights turned off)
Charging rates	5 A max.

Differential

Oil capacity	Front (4WD models)	▶Vehicles with a manual transmission 1.5 qt. (1.4 L, 1.2 Imp.qt.) ▶Vehicles with an automatic transmission 1.7 qt. (1.6 L, 1.4 Imp.qt.)
	Rear	▶Vehicles with a rear differential lock 3.1 qt. (2.9 L, 2.6 Imp.qt.) ▶Vehicles without a rear differential lock 3.2 qt. (3.0 L, 2.6 Imp.qt.)
Oil type and viscosity	Front (4WD models)	Hypoid gear oil API GL–5 ▶Vehicles with an automatic transmission SAE75W–85 ▶Vehicles with a manual transmission Above 0 F (–18 C): SAE90 Below 0 F (–18 C): SAE80W or 80W–90
	Rear	Hypoid gear oil API GL–5 Above 0 F (–18 C): SAE90 Below 0 F (–18 C): SAE80W or 80W–90

Automatic transmission

Fluid capacity *	11.3 qt. (10.7 L, 9.4 Imp.qt.)
Fluid type	Toyota Genuine ATF WS

*: The fluid capacity is the quantity of reference. If replacement is necessary, contact your Toyota dealer.

⚠ NOTICE

■ **Automatic transmission fluid type**

Using automatic transmission fluid other than “Toyota Genuine ATF WS” may cause deterioration in shift quality, locking up of your transmission accompanied by vibration, and ultimately damage the automatic transmission of your vehicle.

Manual transmission

Gear oil capacity (Reference)	1.9 qt. (1.8 L, 1.6 Imp.qt.)
Gear oil type	Gear oil API GL−4 or GL−5
Recommended gear oil viscosity	SAE 75W−90

Clutch

Clutch free play	0.2 0.6 in. (5 15 mm)
Fluid type	FMVSS No. 116 DOT 3 or SAE J1703

Transfer (4WD models)

Oil capacity	▶Vehicles with an automatic transmission 1.1 qt. (1.0 L, 0.9 Imp.qt.) ▶Vehicles with a manual transmission 1.5 qt. (1.4 L, 1.2 Imp.qt.)
Oil type	▶Vehicles with an automatic transmission Hypoid gear oil API GL−4 or GL−5 ▶Vehicles with a manual transmission Hypoid gear oil API GL−5
Recommended oil viscosity	SAE 75W−90

Brakes

Pedal clearance *1	2.1 in. (54 mm) Min.
Pedal free play	0.04 0.24 in. (1 6 mm)
Brake pad wear limit	0.04 in. (1.0 mm)
Parking brake lining wear limit	0.04 in. (1.0 mm)
Parking brake lever travel *2	5 — 7 clicks
Fluid type	FMVSS No. 116 DOT 3 or SAE J1703

*1: Minimum pedal clearance when depressed with a force of 110 lbf (490 N, 50 kgf) with the engine running.

*2: Parking brake lever travel when pulled with a force of 44.1 lbf (196 N, 20.0 kgf).

Chassis lubrication

Propeller shafts	Spider	Lithium base chassis grease, NLGI No.2
	Slide yoke	Molybdenum — disulfide lithium base chassis grease, NLGI No.2 or lithium base multipurpose grease, NLGI No.2

Steering

Free play	Less than 1.2 in. (30 mm)
Power steering fluid type	Automatic transmission fluid DEXRON® II or III

Tires and wheels

Tire size	P265/75R16 114T, P265/70R17 113S
Tire inflation pressure (Recommended cold tire inflation pressure)	Front tires: 32 psi (220 kPa, 2.2 kgf/cm^2 or bar) Rear tires: 32 psi (220 kPa, 2.2 kgf/cm^2 or bar) Spare tire: 32 psi (220 kPa, 2.2 kgf/cm^2 or bar)
Wheel size	16 7 J, 17 7 1/2 J
Wheel nut torque	85 ft·lbf (113 N·m, 11.5 kgf·m)

Light bulbs

	Light Bulbs	Bulb No.	W	Type
Exterior	Headlights	—	60/55	A
	Front turn signal/ parking and front side marker lights	—	21/5	B
	Outside rear view mirror illumination lights	—5 C		
	Rear turn signal lights	5674	21	D
	Stop/tail and rear side marker lights	7443	21/5	C
	Back–up lights	921	18	C
	License plate lights	—	5	C
Interior	Front interior light		8	E
	Rear interior light		8	E

A: HB2 halogen bulbs
B: Single end bulbs
C: Wedge base bulbs (clear)
D: Wedge base bulbs (amber)
E: Double end bulbs

Fuel information

Your vehicle must use only unleaded gasoline.
Premium unleaded gasoline with an octane rating of 91 (Research Octane Number 96) or higher required for optimum engine performance.

At minimum, the gasoline you use should meet the specifications of ASTM D4814 in the U.S.A. and CGSB3.5−M93 in Canada.

Fuel tank opening for unleaded gasoline

To help prevent incorrect fueling, your Toyota has a fuel tank opening that only accommodates the special nozzle on unleaded fuel pumps.

If premium gasoline is not available

If 91 rating gasoline cannot be obtained, you may use unleaded gasoline with an octane rating as low as 87 (Research Octane Number 91).

If your engine knocks

- Consult your Toyota dealer.
- You may occasionally notice light knocking for a short time while accelerating or driving uphill. This is normal and there is no need for concern.

Gasoline quality

In very few cases, driveability problems may be caused by the brand of gasoline you are using. If driveability problems persist, try changing the brand of gasoline. If this does not correct the problem, consult your Toyota dealer.

Gasoline quality standards

- Automotive manufacturers in the US, Europe and Japan have developed a specification for fuel quality called World−Wide Fuel Charter (WWFC) that is expected to be applied worldwide.
- The WWFC consists of four categories that are based on required emission levels. In the US, category 4 has been adopted.
- The WWFC improves air quality by lowering emissions in vehicle fleets, and customer satisfaction through better performance.

Toyota recommends the use of gasoline containing detergent additives

- Toyota recommends the use of gasoline that contains detergent additives to avoid build−up of engine deposits.
- All gasoline sold in the US contains detergent additives to clean and/or keep clean intake systems.

Toyota recommends the use of cleaner burning gasoline

Cleaner burning gasoline, including reformulated gasoline that contains oxygenates such as ethanol or MTBE (Methyl Tertiary Butyl Ether) is available in many areas.

Toyota recommends the use of cleaner burning gasoline and appropriately blended reformulated gasoline. These types of gasoline provide excellent vehicle performance, reduce vehicle emissions and improve air quality.

Toyota does not recommend blended gasoline

- Toyota allows the use of oxygenate blended gasoline where the oxygenate content is up to 10% ethanol or 15% MTBE.
- If you use gasohol in your Toyota, be sure that it has an octane rating no lower than 91.
- Toyota does not recommend the use of gasoline containing methanol.

Toyota does not recommend gasoline containing MMT

Some gasoline contains octane enhancing additive called MMT (Methylcyclopentadienyl Manganese Tricarbonyl).

Toyota does not recommend the use of gasoline that contains MMT. If fuel containing MMT is used, your emission control system may be adversely affected.

The malfunction indicator lamp on the instrument cluster may come on. If this happens, contact your Toyota dealer for service.

NOTICE

Notice on gasoline quality

- Do not use leaded gasoline.
  Leaded gasoline can cause damage to your vehicle's three−way catalytic converters causing the emission control system to malfunction.
- Do not use gasohol other than that stated here.
  Other gasohol may cause fuel system damage or vehicle performance problems.
- Use of unleaded gasoline with an octane rating lower than 91 may result in engine knocking. Persistent knocking can lead to engine damage and should be corrected by refueling with higher octane unleaded gasoline.

Fuel−related poor driveability

If after using a different type of fuel, poor driveability is encountered (poor hot starting, vaporization, engine knocking, etc.), discontinue the use of that type of fuel.

When refueling with gasohol

Take care not to spill gasohol.
It can damage your vehicle's paint.

Tire information

Typical tire symbols

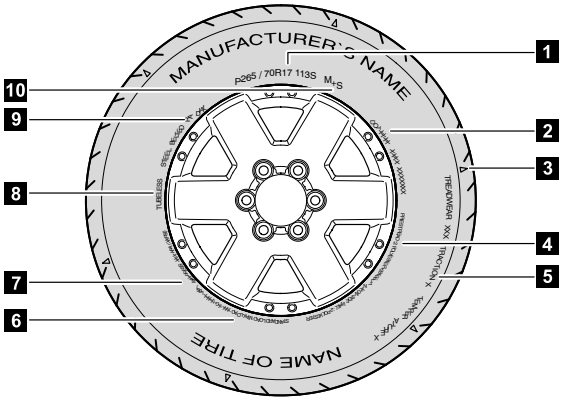

STY61AC003

1 Tire size (P. 377)

2 DOT and Tire Identification Number (TIN) (P. 376)

3 Location of treadwear indicators (P. 378)

4 Tire ply composition and materials

Plies are layers of rubber–coated parallel cords. Cords are the strands which form the plies in a tire.

5 Uniform tire quality grading

For details, see “Uniform tire quality grading” that follows.

6 Load limit at maximum cold tire inflation pressure (P. 380)

7 Maximum cold tire inflation pressure (P. 380)

This means the pressure to which a tire may be inflated.

8 TUBELESS or TUBE TYPE

A tubeless tire does not have a tube and air is directly filled in the tire. A tube type tire has a tu be inside the tire and the tube maintains the air pressure.

9 Radial tires or bias–ply tires

A radial tire has RADIAL on the sidewall. A tire not marked RADIAL is a bias–ply tire.

10 Summer tire or all season tire (P. 289)

An all season tire has M+S on the sidewall. A tire not marked M+S is a summer tire.

Typical DOT and tire identification number (TIN)

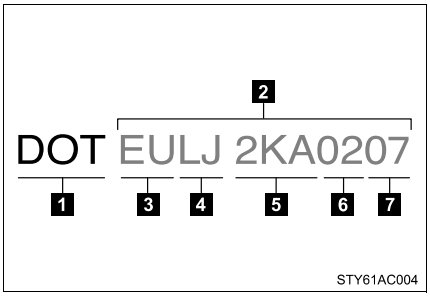

1 DOT symbol*

2 Tire Identification Number (TIN)

3 Tire manufacturer's identification mark

4 Tire size code

5 Manufacturer's optional tire type code (3 or 4 letters)

6 Manufacturing week

7 Manufacturing year

*:The DOT symbol certifies that the tire conforms to applicable Federal Motor Vehicle Safety Standards.

Tire size

Typical tire size information

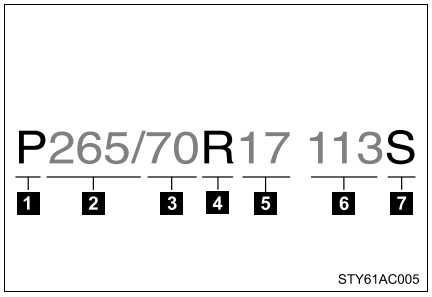

The illustration indicates typical tire size.

1 Tire use
(P = Passenger car,
T = Temporary use)

2 Section width (millimeters)

3 Aspect ratio
(tire height to section width)

4 Tire construction code
(R = Radial, D = Diagonal)

5 Wheel diameter (inches)

6 Load index (2 digits or 3 digits)

7 Speed symbol
(alphabet with one letter)

Tire dimensions

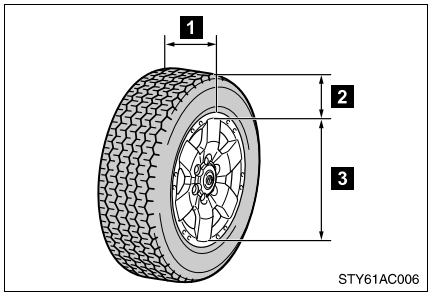

1 Section width

2 Tire height

3 Wheel diameter

Tire section names

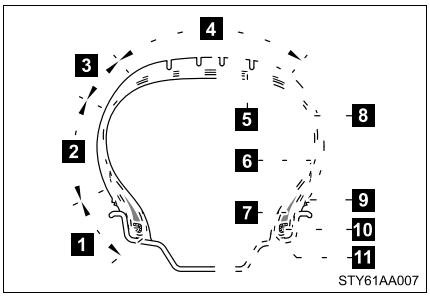

1 Bead
2 Sidewall
3 Shoulder
4 Tread
5 Belt
6 Inner liner
7 Reinforcing rubber
8 Carcass
9 Rim lines
10 Bead wires
11 Chafer

Uniform tire quality grading

This information has been prepared in accordance with regulations issued by the National Highway Tr affic Safety Administration of the U.S.A. Department of Transportation.
It provides the purchasers and/or prospective purchasers of Toyota vehicles with information on uniform tire quality grading.

Your Toyota dealer will help answ er any questions you may have as you read this information.

DOT quality grades

All passenger vehicle tires mu st conform to Federal Safety Requirements in addition to these grades. Quality grades can be found where applicable on the tire sidewall between tread shoulder and maximum section width.

For example: Treadwear 200 Traction AA Temperature A

Treadwear

The treadwear grade is a comparative rating based on the wear rate of the tire when tested und er controlled conditions on a specified government test course.

For example, a tire graded 150 would wear one and a half (1 − 1/2) times as well on the government course as a tire graded 100.
The relative performance of tires depends upon the actual conditions of their use, however, and may depart significantly from the norm due to variations in driving habits, service practices and differences in road characteristics and climate.

Traction AA, A, B, C

The traction grades, from highest to lowest, are AA, A, B and C, and they represent the tire's ab ility to stop on wet pavement as measured under controlled cond itions on specified government test surfaces of asphalt and concrete.

A tire marked C may have poor traction performance.

Warning: The traction grade assigned to this tire is based on braking (straight ahead) traction tests and does not include cornering (turning) traction.

Temperature A, B, C

The temperature grades are A (the highest), B, and C, representing the tire's resistance to the generation of heat and its ability to dissipate heat when tested under controlled conditions on a specified indoor laboratory test wheel.

Sustained high temperature can cause the material of the tire to degenerate and reduce tire life, and excessive temperature can lead to sudden tire failure.

The grade C corresponds to a level of performance which all passenger car tires must meet under the Federal Motor Vehicle Safety Standard No. 109.

Grades B and A represent higher levels of performance on the laboratory test wheel than the minimum required by law.

Warning: The temperature grades for this tire are established for a tire that is properly inflated and not overloaded.
Excessive speed, underinflation, or excessive loading, either separately or in combination, can cause heat buildup and possible tire failure.

Glossary of tire terminology

Tire related term	Meaning
Cold tire inflation pressure	Tire pressure when the vehicle has been parked for three hours or more, or has not been driven more than 1 mile or 1.5 km under that condition
Maximum inflation pressure	The maximum cold inflated pressure to which a tire may be inflated, shown on the sidewall of the tire
Recommended inflation pressure	Cold tire inflation pressure recommended by a manufacturer
Accessory weight	The combined weight (in excess of those standard items which may be replaced) of transmission, power steering, power brakes, power windows, power seats, radio and heater, to the extent that these items are available as factory−installed equipment (whether installed or not)
Curb weight	The weight of a motor vehicle with standard equipment, including the maximum capacity of fuel, oil and coolant, and if so equipped, air conditioning and additional weight optional engine
Maximum loaded vehicle weight	The sum of: (a) Curb weight (b) Accessory weight (c) Vehicle capacity weight (d) Production options weight

Tire related term	Meaning
Normal occupant weight	150 lb. (68 kg) times the number of occupants specified in the second column of Table 1* that follows
Occupant distribution	Distribution of occupants in a vehicle as specified in the third column of Table 1* below
Production options weight	The combined weight of installed regular production options weighing over 5 lb. (2.3 kg) in excess of the standard items which they replace, not previously considered in curb weight or accessory weight, including heavy duty brakes, ride levelers, roof rack, heavy duty battery, and special trim
Rim	A metal support for a tire or a tire and tube assembly upon which the tire beads are seated
Rim diameter (Wheel diameter)	Nominal diameter of the bead seat
Rim size designation	Rim diameter and width
Rim type designation	The industry manufacturer's designation for a rim by style or code
Rim width	Nominal distance between rim flanges
Vehicle capacity weight (Total load capacity)	The rated cargo and luggage load plus 150 lb. (68 kg) times the vehicle's designated seating capacity
Vehicle maximum load on the tire	The load on an individual tire that is determined by distributing to each axle its share of the maximum loaded vehicle weight, and dividing by two
Vehicle normal load on the tire	The load on an individual tire that is determined by distributing to each axle its share of curb weight, accessory weight, and normal occupant weight (distributed in accordance with Table 1* below), and dividing it by two

Tire related term	Meaning
Weather side	The surface area of the rim not covered by the inflated tire
Bead	The part of the tire that is made of steel wires, wrapped or reinforced by ply cords and that is shaped to fit the rim
Bead separation	A breakdown of the bond between components in the bead
Bias ply tire	A pneumatic tire in which the ply cords that extend to the beads are laid at alternate angles substantially less than 90 degrees to the centerline of the tread
Carcass	The tire structure, except tread and sidewall rubber which, when inflated, bears the load
Chunking	The breaking away of pieces of the tread or sidewall
Cord	The strands forming the plies in the tire
Cord separation	The parting of cords from adjacent rubber compounds
Cracking	Any parting within the tread, sidewall, or innerliner of the tire extending to cord material
CT	A pneumatic tire with an inverted flange tire and rim system in which the rim is designed with rim flanges pointed radially inward and the tire is designed to fit on the underside of the rim in a manner that encloses the rim flanges inside the air cavity of the tire
Extra load tire	A tire designed to operate at higher loads and at higher inflation pressures than the corresponding standard tire
Groove	The space between two adjacent tread ribs
Innerliner	The layer(s) forming the inside surface of a tubeless tire that contains the inflating medium within the tire

Tire related term	Meaning
Innerliner separation	The parting of the innerliner from cord material in the carcass
Intended outboard sidewall	(a) The sidewall that contains a whitewall, bears white lettering, or bears manufacturer, brand, and/or model name molding that is higher or deeper than the same molding on the other sidewall of the tire, or (b) The outward facing sidewall of asymmetrical tire that has a particular side that must always face outward when mounted on a vehicle
Light truck (LT) tire	A tire designated by its manufacturer as primarily intended for use on lightweight trucks or multipurpose passenger vehicles
Load rating	The maximum load that a tire is rated to carry for a given inflation pressure
Maximum load rating	The load rating for a tire at the maximum permissible inflation pressure for that tire
Maximum permissible inflation pressure	The maximum cold inflation pressure to which a tire may be inflated
Measuring rim	The rim on which a tire is fitted for physical dimension requirements
Open splice	Any parting at any junction of tread, sidewall, or innerliner that extends to cord material
Outer diameter	The overall diameter of an inflated new tire
Overall width	The linear distance between the exteriors of the sidewalls of an inflated tire, including elevations due to labeling, decorations, or protective bands or ribs
Passenger car tire	A tire intended for use on passenger cars, multipurpose passenger vehicles, and trucks, that have a gross vehicle weight rating (GVWR) of 10,000 lb. or less

Tire related term	Meaning
Ply	A layer of rubber−coated parallel cords
Ply separation	A parting of rubber compound between adjacent plies
Pneumatic tire	A mechanical device made of rubber, chemicals, fabric and steel or other materials, that, when mounted on an automotive wheel, provides the traction and contains the gas or fluid that sustains the load
Radial ply tire	A pneumatic tire in which the ply cords that extend to the beads are laid at substantially 90 degrees to the centerline of the tread
Reinforced tire	A tire designed to operate at higher loads and at higher inflation pressures than the corresponding standard tire
Section width	The linear distance between the exteriors of the sidewalls of an inflated tire, excluding elevations due to labeling, decoration, or protective bands
Sidewall	That portion of a tire between the tread and bead
Sidewall separation	The parting of the rubber compound from the cord material in the sidewall
Snow tire	A tire that attains a traction index equal to or greater than 110, compared to the ASTM E−1136 Standard Reference Test Tire, when using the snow traction test as described in ASTM F−1805−00, Standard Test Method for Single Wheel Driving Traction in a Straight Line on Snow−and Ice−Covered Surfaces, and which is marked with an Alpine Symbol ( ) on at least one sidewall
Test rim	The rim on which a tire is fitted for testing, and may be any rim listed as appropriate for use with that tire

Tire related term	Meaning
Tread	That portion of a tire that comes into contact with the road
Tread rib	A tread section running circumferentially around a tire
Tread separation	Pulling away of the tread from the tire carcass
Treadwear indicators(TWI)	The projections within the principal grooves designed to give a visual indication of the degrees of wear of the tread
Wheel−holding fixture	The fixture used to hold the wheel and tire assembly securely during testing

*:Table 1 Occupant loading and distri bution for vehicle normal load for various designated seating capacities

Designated seating capacity, Number of occupants	Vehicle normal load, Number of occupants	Occupant distribution in a normally loaded vehicle
2 through 4	2	2 in front
5 through 10	3	2 in front, 1 in second seat
11 through 15	5	2 in front, 1 in second seat, 1 in third seat, 1 in fourth seat
16 through 20	7	2 in front, 2 in second seat, 2 in third seat, 1 in fourth seat

Customizable features

Your vehicle includes a variety of electronic features that can be personalized to your preferences. Programming these preferences requires specialized equipment and may be performed by an authorized Toyota dealership.

Some function settings are changed simultaneously with other functions being customized. Contact your Toyota dealer for further details.

Item	Function	Default setting	Customized setting
Wireless remote control (P. 30)	Wireless remote control	ON	OFF
	Unlocking operation	Driver's door unlocked in one step, all doors unlocked in two steps	All doors unlocked in one step
	Time elapsed before automatic door lock function is activated if door is not opened after being unlocked	60 seconds	0 seconds
			30 seconds
			120 seconds
	Operation signal (Emergency flashers)	ON	OFF
	Door lock buzzer	ON	OFF
	Panic function	ON	OFF
	Buzzer sounds when pushing LOCK with any door not closed	ON	OFF

Item	Function	Default setting	Customized setting
Door lock (P. 33)	Unlocking using a key	Driver's door unlocked in one step, all doors unlocked in two steps	All doors unlocked in one step
Automatic light off system (P. 131)	Time elapsed before headlights automatically turn off after doors are closed	30 seconds	0 seconds
			60 seconds
			90 seconds
Illumination (P. 226)	Time elapsed before lights turn off	15 seconds	7.5 seconds
			30 seconds
	Operation after the engine switch is turned to the LOCK position	ON	OFF
	Operation when the doors are unlocked	ON	OFF
Seat Belt Reminder Buzzer (P. 334)	Vehicle speed linked seat belt reminder buzzer	ON	OFF

Items to initialize

The following items must be init ialized for normal system operation in cases such as after the battery is reconnected, or maintenance is performed on the vehicle.

Item	When to initialize	Reference
Engine oil maintenance data	After changing engine oil	P. 278

Reporting safety defects for U.S. owners

If you believe that your vehicle has a defect which could cause a crash or could cause injury or death, you should immediately inform the National Highway Traffic Safety Administration (NHTSA) in addition to notifying Toyota Motor Sales, U.S.A., Inc. (Toll−free: 1−800−331−4331).

If NHTSA receives similar complaints, it may open an investigation, and if it finds that a safety defect exists in a group of vehicles, it may order a recall and remedy campaign. However, NHTSA cannot become involved in individual problems between you, your dealer, or Toyota Motor Sales, U.S.A., Inc.

To contact NHTSA, you may call the Vehicle Safety Hotline toll−free at 1−888−327−4236 (TTY: 1−800−424−9153); go to *http://www.safercar.gov*; or write to: Administrator, NHTSA, 400 Seventh Street, SW., Washington, DC 20590. You can also obtain other information about motor vehicle safety from *http://www.safercar.gov*.

Abbreviation/Acronym list

ABBREVIATIONS	MEANING
2WD	Two Wheel Drive
4WD	Four Wheel Drive
ABS	Anti−Lock Brake System
ACC	Accessory
AI−SHIFT	Artificial Intelligence shifting
ALR	Automatic Locking Retractor
A−TRAC	Active Traction Control
AUTO LSD	Automatic Limited Slip Differential
CRS	Child Restraint System
E/M	English/U.S. Customary System and metric
ECU	Electronic Control Unit
EDR	Event Data Recorder
ELR	Emergency Locking Retractor
GAWR	Gross Axle Weight Rating
GVWR	Gross Vehicle Weight Rating
I/M	Emission inspection and maintenance
INT	Intermittent
LED	Light Emitting Diode
LT	Light truck
M + S	Mud + Snow
MMT	Methylcy clopentadienyl Manganese Tricarbonyl
MTBE	Methyl Tertiary Butyl Ether
OBD	On Board Diagnostics
RES	Resume
RR DIFF LOCK	Rear differential lock
SRS	Supplemental Restraint System
TIN	Tire Identification Number

ABBREVIATIONS	MEANING
TPMS	Tire Pressure Warning System
TRAC	Traction Control
TWI	Treadwear indicators
VIN	Vehicle Identification Number
VSC	Vehicle Stability Control

Alphabetical index

A

A/C 184
ABS 156
Access doors 36
Accessory meter 130
Active traction control system 148
Air conditioning filter..... 298
Air conditioning system
- Air conditioning filter 298
- Manual air conditioning system 184

Airbags
- Airbag operating conditions..... 76
- Airbag precautions for your child 80
- Airbag warning light..... 332
- Curtain shield airbag operating conditions..... 76
- Curtain shield airbag precautions 83
- Front passenger occupant classification system 85
- General airbag precautions 80
- Locations of airbags 73
- Modification and disposal of airbags 84
- Proper driving posture 71, 80
- Side airbag operating conditions..... 76
- Side airbag precautions 82
- SRS airbags 73

Antenna..... 199
Anti−lock brake system
- ABS warning light 332
- Anti−lock brake system 156

Armrest 246
Audio input 222
Audio remote controls..... 224
Audio system
- Antenna 199
- Audio input 222
- AUX adapter..... 222
- CD player 200
- MP3/WMA disc 208
- Optimal use 217
- Portable music player 222
- Radio..... 194
- Type 191

AUTO LSD system 150
Automatic light off system..... 132
Automatic limited slip differential 150
Automatic transmission
- Automatic transmission 117
- If the shift lever cannot be shifted from P 351

AUX adapter 222
Auxiliary box 228, 234

B

Back door 38
Back door lock 38
Back−up lights
- Replacing light bulbs 318
- Wattage..... 371

Back window 41
Battery
- Charging system warning light 332
- Checking 283
- If the vehicle battery is discharged 353
- Preparing and checking before winter 169

Bottle holders..... 228, 233
Brake assist..... 156
Brakes
- Brake system warning buzzer 149, 151, 158
- Brake system warning light ... 331
- Fluid 280
- Parking brake 122

Break−in tips 106

C

Care
Exterior 258
Interior 260
Seat belts 261
Cargo capacity 165
Cargo net hook..... 250
CD player 200
Center differential lock 144
Certification label 172, 363
Chains 170
Child restraint system
Booster seats, definition 90
Booster seats, installation 96
Convertible seats, definition ... 90
Convertible seats, installation 95
Front passenger occupant classification system 85
Infant seat, definition 90
Infant seats, installation..... 94
Installing CRS with lower anchorages 97
Installing CRS with seat belts 93
Installing CRS with top straps 98
Child safety
Airbag precautions 81
Battery precautions 284, 355
Child restraint system..... 90
How your child should wear the seat belt 53
Installing child restraints 93
Power window lock switch..... 62
Power window precautions..... 63
Removed key battery precautions 302
Seat belt extender precautions 54
Seat belt precautions..... 54
Cleaning
Exterior 258
Interior 260
Seat belts 261
Clinometer 130
Clock 237
Clutch start cancel switch..... 155
Compass..... 130, 252
Condenser 280
Cooling system
Engine overheating 356
CRS 90
Cruise control..... 136
Cup holders 228, 229, 232
Curtain shield airbags 73
Customizable features..... 386

D

Daytime running light system 132
Defogger
Rear window 190
Dimension..... 362
Dinghy towing 182
Do−it−yourself maintenance..... 269
Doors
Access doors..... 36
Door glasses 62
Door lock 30, 33
Open door warning light 334
Side doors 33
Side mirrors..... 59
Driver's seat belt reminder buzzer 334
Driver's seat belt reminder light 334
Driving
Break−in tips 106
Correct posture 71
Driving assist systems..... 156
Procedures..... 114
Winter driving tips..... 169

E

Emergency, in case of
Blown fuse.....303
If the engine will not start 350
If the shift lever cannot be shifted from P.....351
If the vehicle battery is discharged 353
If the warning buzzer sounds 331
If the warning light turns on ...331
If you have a flat tire 340
If you lose your keys 352
If you think something is wrong 327
If the vehicle becomes stuck 359
If your vehicle needs to be towed 322
If your vehicle overheats 356

Engine
Compartment 274
Engine switch 114
Exhaust gas 110
Hood.....273
How to start the engine 114
Identification number.....363
If the engine will not start 350
Ignition switch.....114
Immobilizer system 68
Overheating.....356
Warning light 331

Engine coolant
Capacity 366
Checking 279
Preparing and checking before winter 169
Temperature gauge.....124

Engine coolant temperature gauge 124

Engine immobilizer system.....68

Engine oil
Capacity 365
Checking 275
Preparing and checking before winter 169
Warning light 332, 334

Engine oil maintenance data 278

Engine switch..... 114

Event data recorder 329

F

Floor mat 247

Fluid
Brake..... 280
Washer..... 286

Four−wheel drive system
Four−wheel drive control lever..... 144
Front−−wheel drive control lever..... 146

Front passenger occupant classification system 85

Front passenger's seat belt reminder light 334

Front passenger's seat belt warning buzzer 334

Front seats
Adjustment 43

Front side marker lights
Replacing light bulbs..... 317
Switch 131
Wattage..... 371

Front turn signal lights
Lever 121
Replacing light bulbs..... 317
Switch 121
Wattage..... 371

Fuel
Capacity 364
Fuel gauge 124
Fuel pump shut off system.... 328
Gas station information 408
Information 372
Refueling..... 64
Type 364
Warning light 334

Fuel door **64**
Fuel filler door **64**
Fuel pump shut off system **328**
Fuses
Fuses..... 303
Locations 307, 311

G
Gas station information **408**
Gauges **124**
Glass hatch **41**
Glove box **228**

H
Head restraints
Adjusting 49
Headlights
Replacing light bulbs 315
Switch..... 131
Wattage 371
Hood **273**
Hooks
Cargo net..... 250
Shopping bag 251

I
I/M test **268**
Identification
Engine 363
Tire 376
Vehicle..... 363
Ignition switch **114**
Illuminated entry system **226**
Immobilizer system **68**
Indicator lights **127**
Initialization
Items to initialize..... 388
Inside rear view mirror..... **58**
Interior lights
Switch..... 227
Wattage 371
Instrument panel light control..... **125**
Intuitive parking assist **139**

J
Jack
Positioning the jack 342
Replacing the wheel..... 340
Jack handle **342**

K
Keyless entry..... **30**
Keys
Engine switch 114
If you lose your keys 352
Ignition switch..... 114
Key battery 301
Keyless entry..... 30
Key number..... 28
Keys 28
Reminder buzzer..... 336
Wireless remote control key 28, 30

L
License plate lights
Replacing light bulbs 319
Switch..... 131
Wattage..... 371
Light bulbs
Replacing 314
Wattage..... 371
Lights
Automatic light off system 132
Headlights switch 131
Instrument panel light control dial 125
Interior light switch 227
Replacing light bulbs 314
Turn signal lights switch 121
Wattage..... 371
Limited slip differential..... **150**
Load capacity **165, 168, 362**
Lock steering column..... **57**
Luggage storage box..... **248**
Luggage compartment features..... **249**

M

Maintenance
- Do−it−yourself maintenance ... 269
- General maintenance 265
- Maintenance data..... 362
- Maintenance requirements.... 263
- Vehicle exterior 258
- Vehicle interior 260

Malfunction indicator lamp 332

Manual air conditioning system 184

Manual transmission 119

Meter
- Accessory meter 130
- Instrument panel light control 125
- Meters 124

Mirrors
- Inside rear view mirror..... 58
- Side mirrors..... 59
- Vanity mirrors 236

MP3 disc 208

O

Odometer 124

Off−road precautions
- Driving 162
- Vehicle 160

Oil
- Engine oil 275
- Warning light 332,334

Opener
- Hood..... 273

Outside rear view mirror illumination lights
- Replacing light bulbs 319
- Switch..... 131
- Wattage 371

Outside rear view mirrors
- Adjusting and folding 59

Outside temperature display 238

Overheating, Engine 356

P

Parking assist 139

Parking brake 122

Parking lights
- Replacing light bulbs 317
- Switch 131
- Wattage..... 371

Power outlet 239, 240

Power steering
- Fluid 282

Power windows 62

R

Radiator 274, 280

Radio 194

Rear seat
- Folding down..... 44
- Removing rear seat bottom cushions 45

Rear side marker lights
- Replacing light bulbs 318
- Switch 131
- Wattage..... 371

Rear turn signal lights
- Lever 121
- Replacing light bulbs 318
- Switch 121
- Wattage..... 371

Rear window..... 41

Rear window defogger 190

Replacing
- Key battery 301
- Fuses 303
- Light bulbs..... 314
- Tires 287,340
- Wheels 296

Rear differential lock system 152

Rear step bumper 40

Rear window wiper 135

Reporting safety defects for U.S. owners 390

S

Seat belts
Adjustment 51
ALR 53
Automatic Locking Retractor .. 53
Child restraint system installation 93
Cleaning and maintaining..... 261
ELR 53
Emergency Locking Retractor 53
How to wear your seat belt..... 51
How your child should wear the seat belt 53
Pregnant women, proper seat belt use..... 53
Reminder buzzer 334
Reminder light 334
Seat belt extenders 54
Seat belt pretensioners 52
Seating capacity..... 168
Seats
Adjustment 43
Adjustment precautions..... 43
Child seats/child restraint system installation..... 93
Cleaning 258, 260
Folding down the rear seat..... 44
Folding down the rear seat precautions 48
Front seat adjustment..... 43
Front seat adjustment precautions 43
Head restraint..... 49
Properly sitting in the seat 71
Service reminder indicators 128
Shift lever
Automatic transmission 117
Four−wheel drive..... 144
Front−wheel drive..... 146
If the shift lever cannot be shifted from P..... 351
Manual transmission 119
Shift lock system 351
Side airbags..... 73
Side doors 33
Side marker lights
Replacing light bulbs 317, 318
Switch..... 131
Wattage..... 371
Side mirror
Adjusting and folding..... 59
Spare tire
Inflation pressure..... 370
Replacing 340
Spare tire..... 340
Spark plug 366
Specifications..... 362
Speedometer 124
SRS airbags
Curtain shield airbags 73
Front airbags 73
Precautions 80
Side airbags 73
Steering wheel
Adjustment 57
Stop lights
Replacing light bulbs 318
Wattage..... 371
Storage feature..... 228
Storage precautions 165
Stuck
If the vehicle becomes stuck 359
Sun visors
Front..... 235
Side 235
Switch
Active traction control switch..... 148
AUTO LSD switch 150
Clutch start cancel switch..... 155
Cruise control switch 136
Engine switch 114
Ignition switch..... 114

Intuitive parking assist switch 139
Headlights switch 131
Light switch 131
Power door lock switch 33
Power window switch 62
Rear differential lock switch 152
Turn signal lights 121
Window lock switch 62
Wiper and washer 133, 135

T

Tachometer..... 124
Tail lights
Replacing light bulbs 318
Switch..... 131
Wattage 371
Theft deterrent system
Engine immobilizer system 68
Theft prevention labels 70
Theft prevention labels..... 70
Tire inflation pressure 370
Tire information
Glossary 380
Size 377
Tire identification number 376
Uniform tire quality grading ... 378
Tires
Chains 170
Checking 287
If you have a flat tire 340
Identification number 376
Inflation pressure..... 370
Inflation pressure sensor 288
Information 375
Replacing 287, 340
Rotating tires 287
Size 370
Snow tires 170
Spare tire..... 341
Tire pressure warning system 287, 337
Warning light 334
Tools 340
Total load capacity 168
Towing
Dinghy towing 182
Emergency towing 322
Trailer towing 172
Traction control system 156
TRAC 156
Trip meter 124
Turn signal lights
Lever 121
Replacing light bulbs 315
Switch 121
Wattage..... 371

V

Vanity mirrors 236
Vehicle identification number 363
Vehicle stability control 156
Voltmeter 124
VSC 156

W

Warning buzzers
Key reminder..... 336
Seat belt reminder..... 334
Warning lights
ABS 332
Airbag system 332
Anti-lock brake system 332
Automatic transmission fluid temperature 332
Brake system 331
Charging system 332
Driver's seat belt 334
Electronic engine control system 332
Engine oil replacement 334
Front passenger occupant classification system 332
Front passenger's seat belt... 334
Low brake fluid 331
Low engine oil pressure 332

Low fuel level..... 334
Low tire inflation pressure 334
Malfunction indicator lamp.... 332
Open door 334
Seat belt 334
Seat belt pretensioner system..... 332
SRS 332
SRS airbag system..... 332
Tire pressure 334
Tire pressure warning system..... 334
Unengaged “Park” 332
VSC/TRAC 332
Washer
Checking 286
Preparing and checking before winter 169
Switch..... 133, 135
Washing and waxing..... 258
Weight
Cargo capacity 165
Load limits 168
Weight 362
Wheels..... 296
Window glasses 41, 62
Window lock switch 62
Windows
Power windows 62
Rear window defogger 190
Washer 133, 135
Windshield wipers..... 133, 135
Wireless remote control key
Replacing the battery 301
Wireless remote control..... 30
Winter driving tips..... 169
WMA disc 208

What to do if...

A tire punctures	P. 340	If you have a flat tire
The engine does not start	P. 350	If the engine will not start
	P. 68	Engine immobilizer system
	P. 353	If the battery is discharged
The shift lever cannot be moved out	P. 351	If the shift lever cannot be shifted from P
The engine coolant temperature gauge enters the red zone	P. 356	If your vehicle overheats
Steam can be seen coming from under the hood		
The key is lost	P. 352	If you lose your keys
The battery runs out	P. 353	If the battery is discharged
The doors cannot be locked	P. 33	Side doors
	P. 36	Access doors
	P. 38	Back door
The vehicle is stuck in mud or sand	P. 359	If the vehicle becomes stuck
The warning light or indicator light comes on	P. 331	If a warning light turns on

Instrument cluster

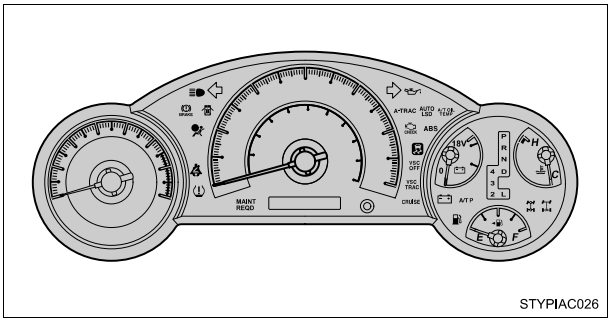

Center panel

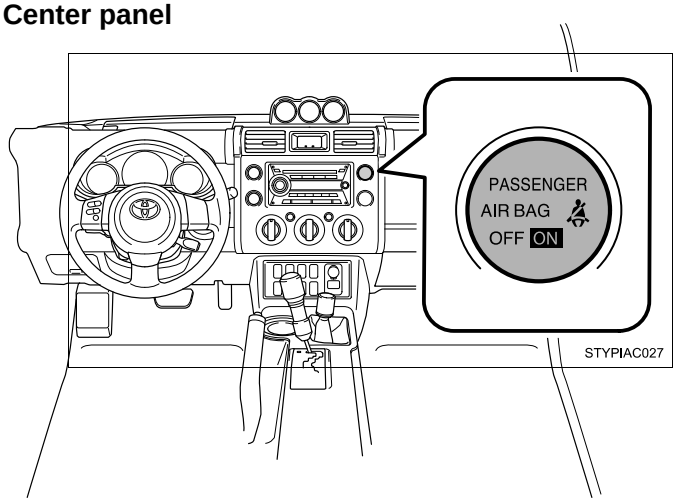

■Warning lights

BRAKE	Brake system warning light	P. 331
	Charging system warning light	P. 332
	Low engine oil pressure warning light	P. 332
CHECK	Malfunction indicator lamp	P. 332
ABS or ABS	ABS warning light	P. 333
MAINT REQD	Engine oil replacement reminder light	P. 335
	SRS warning light	P. 332
A/T OIL TEMP	Automatic transmission fluid temperature warning light	P. 333
A/T P	Unengaged Park warning light	P. 333
VSC TRAC	VSC/TRAC warning light	P. 333
	Tire pressure warning light	P. 334
	Open door warning light	P. 334
	Low fuel level warning light	P. 335
	Driver's seat belt reminder light	P. 334
PASSENGER	Front passenger's seat belt reminder light	P. 334

Memo

Memo

Memo

GAS STATION INFORMATION

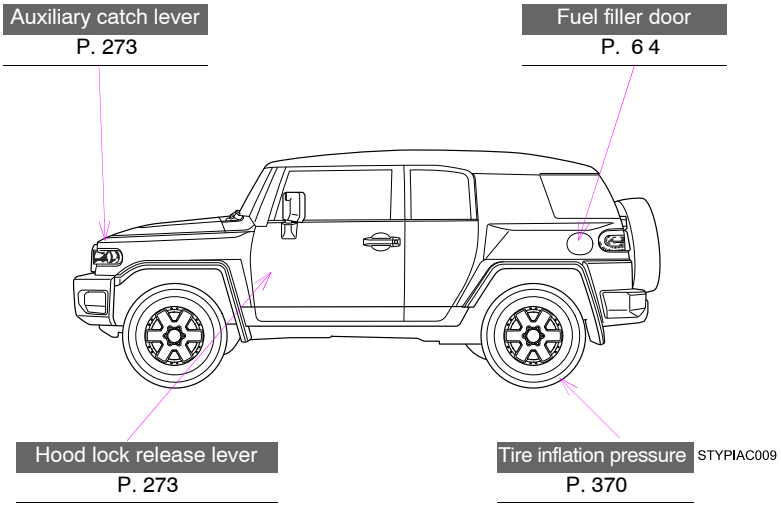

Fuel tank capacity	19.0 gal. (72.0 L, 15.8 Imp.gal.)
Fuel type	Premium unleaded gasoline, Octane Rating 91 (Research Octane Number 96) or higher
Cold tire inflation pressure	P. 370
Engine oil capacity (Drain and refill)	qt. (L, Imp.qt.) With filter 5.5 (5.2, 4.6) Without filter 5.2 (4.9, 4.3)
Engine oil type	Toyota Genuine Motor Oil or equivalent Oil grade: P. 365 ILSAC multigrade engine oil Recommended oil viscosity: SAE 5W−30